SY88053CL

1.0625G to 12.5G Limiting Post Amplifier with Programmable Decision Threshold

Revision 1.0

General Description

The SY88053CL limiting post amplifier is designed for use in fiber-optic receivers for multi-rate applications from 1.0625Gbps to 12.5Gbps.

The SY88053CL contains a high-bandwidth, high-sensitivity input stage with user-programmable, wide-range SD assert/LOS de-assert threshold levels, which enables optimized system reach. Typically, 4dB of electrical hysteresis is provided to minimize LOS or SD chattering caused by noisy input signals. A logic level control pin is provided to enable user selection of an open-collector, TTL-compatible LOS or SD status indication signal with an external 5kΩ to 10kΩ pull-up resistor.

The SY88053CL provides fast SD assert and LOS de-assert times over the entire differential input voltage range of $5mV_{PP}$ to $1800mV_{PP}$.

The SY88053CL input stage also provides a user-adjustable decision threshold circuit to optimize BER in noisy applications such as WDM, where EDFA and Raman amplifiers contribute uneven noise levels. By applying an external control voltage, the decision threshold can typically be adjusted from 30% to 70% from the nominal 50% threshold when the circuit is disabled.

The SY88053CL provides integrated 50Ω input and output impedances to optimize the high-speed signal paths and reduce component count. The post amplifier outputs have user-selectable polarity inversion control to simplify PCB layout. A TTL-compatible JAM input is provided to enable a SQUELCH function by feeding back the LOS or SD signal. The JAM input disables only the post amplifier output.

The SY88053CL operates from a single +3.3V power supply, over temperatures ranging from –40°C to +85°C.

Datasheets and support documentation are available on Micrel's web site at: www.micrel.com.

Features

- Multi-rate operation from 1.0625Gbps to 12.5Gbps
- Adjustable decision threshold level for offset compensation or BER optimization
- Wide differential input range ($5mV_{PP}$ to $1800mV_{PP}$)
- Wide SD de-assert or LOS assert threshold range
  - $3mV_{PP}$ to $30mV_{PP}$
  - 4dB typical electrical hysteresis
- Fast SD assert and LOS de-assert times
  - 75ns typical; 120ns maximum
- Selectable LOS or SD status signal indicator
- Selectable RXOUT+/RXOUT– polarity inversion
- TTL-compatible JAM input with internal pull-up
- Low-noise CML data inputs with integrated 50Ω termination impedance to internal reference V_{REF}
- Low-noise CML data outputs with integrated 50Ω termination impedance
  - 25ps typical rise/fall times
- Wide range power supply: 3.3V ±10%
- Industrial temperature range: –40°C to +85°C
- Available in a tiny 3mm x 3mm QFN package

Applications

- Asymmetrical/Symmetrical 10GEPON
- Asymmetrical/Symmetrical XGPON
- 10Gigabit Ethernet
- 8Gbps and 10Gbps Fibre Channel
- SONET OC192; SDH STM64
- WDM/DWDM systems

Markets

- PON/FTTx
- Datacom/Enterprise
- Storage area networks
- High-performance computing
- Telecom
- 8G+ Optical transceivers

Typical Application Circuit – Fixed Decision Threshold

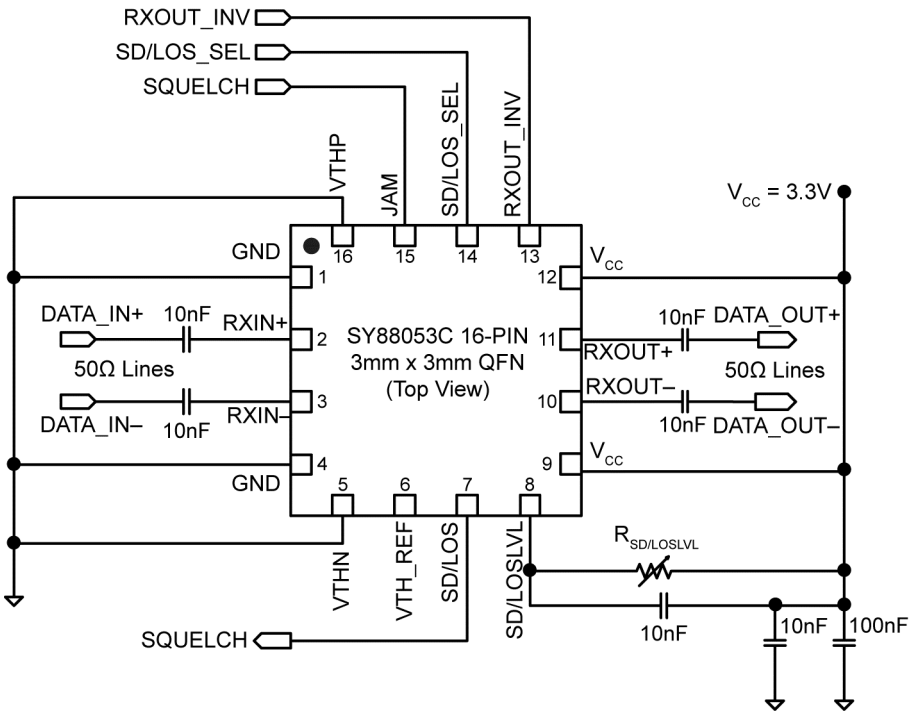

Typical Application Circuit – Adjustable Decision Threshold

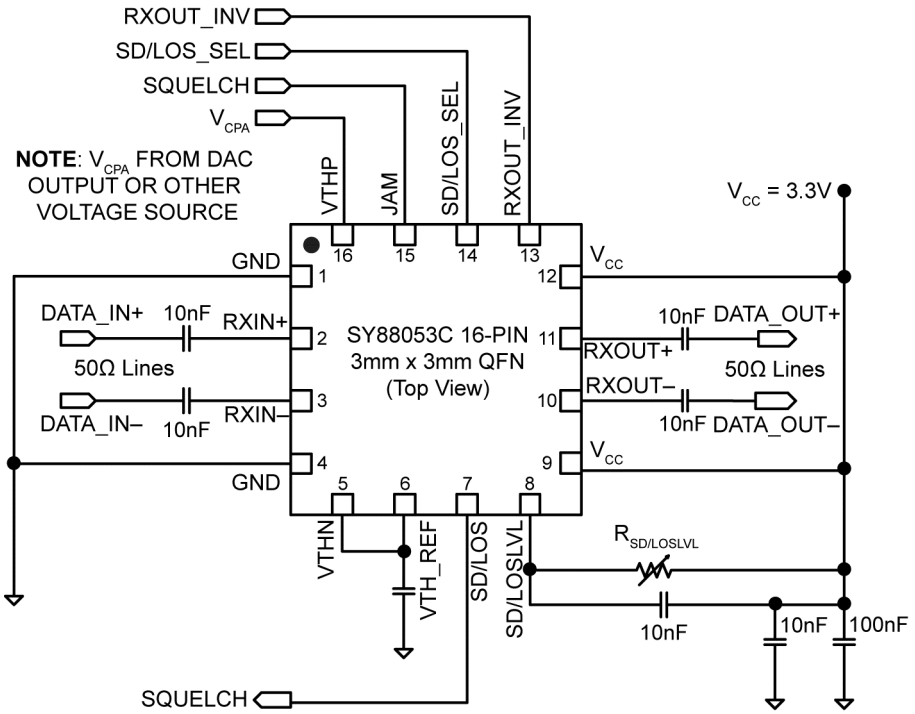

Ordering Information

Part Number	Package Type	Operating Range	Package Marking	Lead Finish
SY88053CLMG	3mm x 3mm QFN-16	Industrial	053C with Pb-Free bar line indicator	NiPdAu Pb-Free
SY88053CLMG TR[1]	3mm x 3mm QFN-16	Industrial	053C with Pb-Free bar line indicator	NiPdAu Pb-Free

Note:

1. Tape and reel.

Pin Configuration

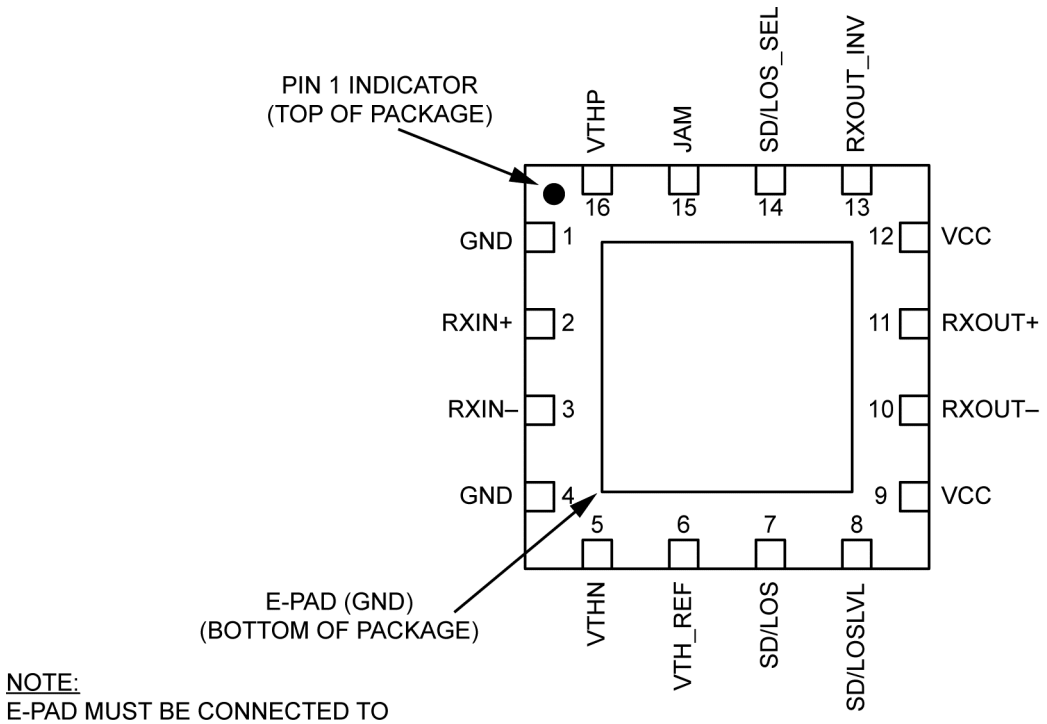

16-Pin 3mm x 3mm QFN
(Top View)

Pin Description

Pin #	Pin Name	Pin Type	Functional Description
1	GND	Negative Supply Rail	Negative supply rail. Connect to the PCB negative power supply plane that is also connected to the ePAD.
2	RXIN+	High-Speed Data Input	Differential noninverting data input. LVPECL/CML compatible. AC-coupled with 100nF (high-frequency, low-ESR capacitor is recommended). Internally terminated with 50Ω to V_{CC} – 1.2V. AC-coupled only.
3	RXIN–	High-Speed Data Input	Differential inverting data input. LVPECL/CML-compatible. AC-coupled with 100nF (high-frequency, low-ESR capacitor is recommended). Internally terminated by 50Ω to V_{CC} – 1.2V. AC-coupled only.
4	GND	Negative Supply Rail	Negative supply rail. Connect to the PCB negative power supply plane that is also connected to the ePAD.
5	VTHN	Analog Voltage Input	Analog control input. Connect to VTH_REF for crossing threshold adjustment using VTHP (pin 16). Connect to GND to disable crossing point adjustment capability.
6	VTH_REF	Analog Current Output	Reference voltage. 1.25V reference with respect to GND for crossing point decision threshold adjustment.
7	SD/LOS	Open Collector Logic Output	Output status indicator. Loss of signal (LOS) or signal detect (SD) open collector output externally terminated with 5kΩ to 10kΩ resistor to V_{CC}. TTL-compatible logic levels. LOS = High when RXIN+/RXIN– amplitude falls below the threshold set at the SD/LOSLVL pin. SD = Low when RXIN+/RXIN– amplitude falls below the threshold set at the SD/LOSLVL pin.
8	SD/LOSLVL	Analog Input	Analog control input. Sets the trigger threshold for the LOS or SD status indicator signals. If SD/LOS_SEL = High (LOS selected), connect a resistor from the SD/LOSLVL pin (loss of signal threshold level) to V_{CC} to adjust the LOS_Assert threshold for the RXIN+/RXIN– data inputs. If SD/LOS_SEL = Low (SD selected), connect a resistor from the SD/LOSLVL pin (signal select level) to V_{CC} to adjust the SD_de-assert threshold for the RXIN+/RXIN– data inputs.
9, 12	V_{CC}	Positive Supply Rail	Positive power supply input. Bypass with a 0.1µF capacitor in parallel with a 0.01µF low-ESR capacitor to GND as close as possible to the V_{CC} pin.
10	RXOUT–	High-Speed Data Output	Differential inverting data output (default). CML-compatible and internally terminated by 50Ω to V_{CC}. Can be AC or DC-coupled to downstream devices. Can be inverted using the RXOUT_INV control pin.
11	RXOUT+	High-Speed Data Output	Differential noninverting data output (default). CML-compatible and internally terminated by 50Ω to V_{CC}. Can be AC or DC-coupled to downstream devices. Can be inverted using the RXOUT_INV control pin.
13	RXOUT_INV	Logic Level Input	Input control signal. TTL-compatible logic input signal to invert the polarity of the RXOUT+/– signals. Internal ~18kΩ pull-up to V_{CC}. Default = High (NC): Pin10 = RXOUT– and pin11 = RXOUT+ RXOUT_INV = Low: Pin10 = RXOUT+ and pin11 = RXOUT–.
14	SD/LOS_SEL	Logic Level Input	Input control signal. TTL-compatible logic input signal to select LOS or SD as the output signal. Internal ~18kΩ pull-up to V_{CC}. Default = High (NC): LOS selected – normal operation LOS/SD_SEL = Low: SD selected and JAM operation is inverted

Pin #	Pin Name	Pin Type	Functional Description
15	JAM	Logic Level Input	Input control signal. TTL-compatible input signal that enables or disables the RXOUT+/– output signals. Internal 27kΩ pull-up resistor to V_{CC}. Can be connected to SD/LOS to form a SQUELCH function. When SD/LOS_SEL = High Default = High and RXOUT+/– outputs are disabled. Low = RXOUT+ and RXOUT– outputs are enabled Operation is inverted when SD/LOS_SEL = Low and SD is selected.
16	VTHP	Analog Voltage Input	Analog control voltage input that typically adjusts the crossing point threshold from 30% to 70%. Threshold crossing adjustment control. Apply a DC-control voltage from 0V to 2.4V to adjust the crossing point. VTHN (pin 6) must be connected to VTH_REF (pin 7). Nominal 50% midpoint decision threshold occurs with VTHP = 1.25V. Connect to ground to disable decision threshold (crossing point) adjust capability.
ePAD	GND	Negative Supply Rail	Exposed thermal pad. Must be soldered to PCB plane connected to the negative supply rail. The recommended via array is needed to remove heat from the device.

Absolute Maximum Ratings[2]

Supply Voltage (V_{CC}) ..... 0V to +4.0V
Input Voltage (RXIN+, RXIN–) ..... V_{CC} – 1.5V to V_{CC}
CML Output Voltage (V_{OUT})…….V_{CC} – 1.0V to V_{CC} + 0.5V
V_{VTH_REF} Current ..... –800µA to +500µA
JAM Voltage ..... 0 to V_{CC}
SD/LOSLVL Voltage ..... V_{CC} – 1.3V to V_{CC}
Lead Temperature (soldering, 20s)..... 260°C
Storage Temperature (T_s) .....–65°C to +150°C

Operating Ratings[3]

Supply Voltage (V_{CC})..... +3.0V to +3.6V
Ambient Temperature (T_A) .....–40°C to +85°C
Junction Temperature (T_J) .....–40°C to +125°C
Package Thermal Resistance[4] .....3mm x 3mm QFN-16
(θ_{JA}) Still-air.....60°C/W
(ψ_{JB}) .....33°C/W

DC Electrical Characteristics

V_{CC} = 3.0 to 3.6V; T_A = –40°C to +85°C, typical values at V_{CC} = 3.3V, T_A = 25°C.

Symbol	Parameter	Condition	Min.	Typ.	Max.	Units
I_{CC}	Power Supply Current	Note 5		58	75	mA
SD/LOSLVL	SD or LOS Threshold Voltage		V_{CC} – 1.3		V_{CC}	V
V_{OH}	RXOUT+/RXOUT– High Voltage		V_{CC} – 0.020	V_{CC} – 0.005	V_{CC}	V
V_{OL}	RXOUT+/RXOUT– Low Voltage		V_{CC} – 0.400	V_{CC} – 0.350	V_{CC} – 0.300	V
V_{OFFSET}	Differential Output Offset	VTHP and VTHN tied to GND			±80	mV
V_{VTH_REF}	Decision Threshold Reference Voltage			1.25		V
Z_0	Single-Ended Output Impedance		45	50	55	Ω
Z_I	Single-Ended Input Impedance		45	50	55	Ω

Notes:

2. Permanent device damage may occur if absolute maximum ratings are exceeded. This is a stress rating only and functional operation is not implied at conditions other than those detailed in the operational sections of this datasheet. Exposure to absolute maximum ratings conditions may affect device reliability.
3. The datasheet limits are not guaranteed if the device is operated beyond the recommended operating conditions.
4. Package thermal resistance assumes that the exposed pad is soldered (or equivalent) to the devices most negative potential on the PCB. ψ_{JB} and θ_{JA} assumes still air and a 4-layer PCB, unless otherwise stated. It also assumes that the recommended via pattern and via sizes on the PCB are used.
5. Outputs RXOUT+ and RXOUT– are loaded with external 50Ω loads and the outputs are enabled.

TTL DC Electrical Characteristics

V_{CC} = 3.0 to 3.6V; T_A = –40°C to +85°C, typical values at V_{CC} = 3.3V, T_A = 25°C.

Symbol	Parameter	Condition	Min.	Typ.	Max.	Units
CPA_{LOW}	Output Signal Crossing Range Lower Limit	VTHN connected to VTH_REF and 0V to 2.4V applied to VTHP.	30	40		%
CPA_{HIGH}	Output signal Crossing Range Upper Limit	$10 \le V_{ID} \le 60mV_{PP}$, see "Crossing Point Adjustment Waveforms." Note 6.		60	70	%
V_{IH}	Input High Voltage	JAM, RXOUT_INV, SD/LOS_SEL	2.0			V
V_{IL}	Input Low Voltage	JAM, RXOUT_INV, SD/LOS_SEL			0.8	V
I_{IH}	JAM, RXOUT_INV, SD/LOS_SEL Input High Current	V_{IN} = 2.7V			20	µA
		V_{IN} = V_{CC}			100	
I_{IL}	JAM, RXOUT_INV, SD/LOS_SEL Input Low Current	V_{IN} = 0.4V	–0.3			mA
V_{OH}	SD or LOS Output High Level	Sourcing 100µA	2.4			V
V_{OL}	SD or LOS Output Low Level	Sinking 2mA			0.4	V

Note:

6. Crossing point adjust functionality is limited to small input amplitude swing levels, as noted. Crossing point adjust range is reduced outside of the noted input amplitude swing levels.

AC Electrical Characteristics

V_{CC} = 3.3V ±10%, T_A = –40°C to +85°C. Typical values at V_{CC} = 3.3V, T_A = 25°C; R_{LOAD} = 50Ω to V_{CC}.

Symbol	Parameter	Condition	Min.	Typ.	Max.	Units
V_{OH}	RXOUT+, RXOUT– High Voltage		V_{CC} – 0.020	V_{CC} – 0.005	V_{CC}	V
V_{OL}	RXOUT+, RXOUT– Low Voltage		V_{CC} – 0.400	V_{CC} – 0.350	V_{CC} – 0.300	V
t_r, t_f	Output Rise/Fall Time (20% to 80%)	Note 7		25	40	ps
t_{JITTER}	Deterministic	Note 8		10		ps
	Random	Note 9		1		
$V_{ID_11.3G}$	Differential Input Voltage Swing	Note 10. See Figure 1.	5		1800	mV_{PP}
$V_{ID_12.5G}$	Differential Input Voltage Swing	Note 11. See Figure 1.	10		1800	mV_{PP}
V_{OD}	Differential Output Voltage Swing	Note 7	600	700	800	mV_{PP}
t_{LOS_D}; t_{LOS_A} t_{SD_D}; t_{SD_A}	LOS De-assert, LOS Assert Time \SD De-assert, SD Assert Time	Note 12		75	120	ns
LOS_{AL_20k}	Low LOS Assert Level	R_{LOSLVL} = 20kΩ, Note 13		3		mV_{PP}
LOS_{DL_20k}	Low LOS De-assert Level	R_{LOSLVL} = 20kΩ, Note 13		5		mV_{PP}
HYS_{L_20k}	Low LOS Hysteresis	R_{LOSLVL} = 20kΩ, Note 14	2	4.4	6	dB
LOS_{AM_10k}	Medium LOS Assert Level	R_{LOSLVL} = 10kΩ, Note 13		4.5		mV_{PP}
LOS_{DM_10k}	Medium LOS De-assert Level	R_{LOSLVL} = 10kΩ, Note 13		7.3		mV_{PP}
HYS_{M_10k}	Medium LOS Hysteresis	R_{LOSLVL} = 10kΩ, Note 14	2	4.1	6	dB
LOS_{AH1_1k}	High1 LOS Assert Level	R_{LOSLVL} = 1kΩ, Note 13		18.6		mV_{PP}
LOS_{DH1_1k}	High1 LOS De-assert Level	R_{LOSLVL} = 1kΩ, Note 13		28.3		mV_{PP}
HYS_{H1_1k}	High1 LOS Hysteresis	R_{LOSLVL} = 1kΩ, Note 14	2	3.6	6	dB
LOS_{AH2_100}	High2 LOS Assert Level	R_{LOSLVL} = 100Ω, Note 13		29.7		mV_{PP}
LOS_{DH2_100}	High2 LOS De-assert Level	R_{LOSLVL} = 100Ω, Note 13		44.6		mV_{PP}
HYS_{H2_100}	High2 LOS Hysteresis	R_{LOSLVL} = 100Ω, Note 14	2	3.5	6	dB
$A_{V(Diff)_053C}$	Differential Voltage Gain			44		dB
S_{21_053C}	Single-Ended Small-Signal Gain		32	38		dB

Note:

7. Amplifier is in limiting mode. Input is a 200MHz square wave.
8. Deterministic jitter is measured using 10Gbps K28.5 pattern, V_{ID} = 20mV_{PP}.
9. Random jitter is measured using 10Gbps K28.7 pattern, V_{ID} = 20mV_{PP}.
10. Differential input swing amplitude for data rates up to 11.3Gbps.
11. Differential input swing amplitude for data rates between 11.3Gbps and 12.5Gbps.
12. In real world applications, the LOS de-assert/assert time can be strongly influenced by the RC time constant of the AC-coupling capacitor and the 50Ω input termination. To keep this time low, use a decoupling capacitor with the lowest value that is allowed by the data rate and the number of consecutive identical bits in the application (typical values are in the range of 0.001µF to 0.1µF).
13. See "Typical Operating Characteristics" for a graph showing how to choose a particular R_{LOSLVL} for a particular LOS assert and its associated de-assert amplitude.
14. This specification defines electrical hysteresis as 20log (LOS de-assert/LOS assert). The ratio between optical hysteresis and electrical hysteresis is found to vary between 1.5 and 2, depending on the level of received optical power and ROSA characteristics.

Crossing Point Adjustment Waveforms

Waveform 1: Nominal Crossing Point Adjustment (50% Decision Threshold) – 20mV$_{PP}$ Signal Input

(VTHN is tied to VTH_REF; VTHP = 1.25V)

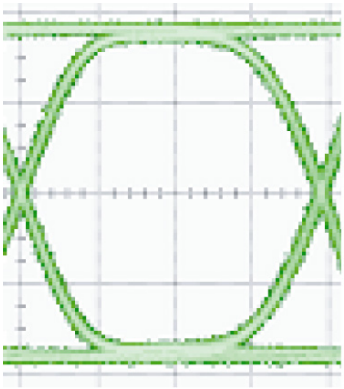

Waveform 2: Minimum Crossing Point Adjustment (~30% Decision Threshold) – 20mV$_{PP}$ Signal Input

VTHN is tied to VTH_REF; VTHP is approximately 0.75V

Note: Although the crossing point adjustment circuit has sufficient range to move the decision point threshold to 20%, it is recommended that the minimum adjustment be limited to ~30%.

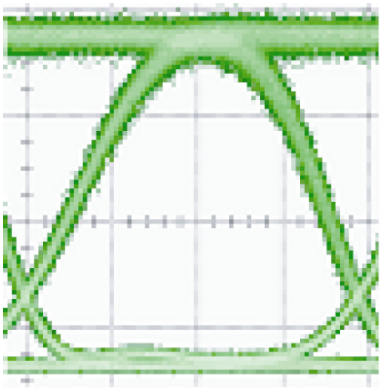

Waveform 3: Minimum Crossing Point Adjustment (~70% Decision Threshold) – 20mV$_{PP}$ Signal Input

VTHN is tied to VTH_REF; VTHP is approximately 1.75V

Note: Although the crossing point adjustment circuit has sufficient range to move the decision point threshold to 80%, it is recommended that the maximum adjustment be limited to ~70%.

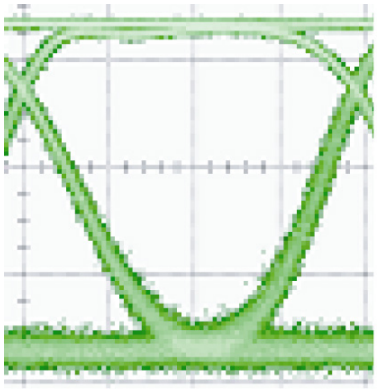

Typical Operating Characteristics

V_{CC} = 3.3V, T_A = 25°C, R_{LOAD} = 50Ω to V_{CC}, unless otherwise stated.

V_{ID}(LOS Assert) and V_{ID}(LOS De-Assert) vs. $R_{SD/LOSLVL}$

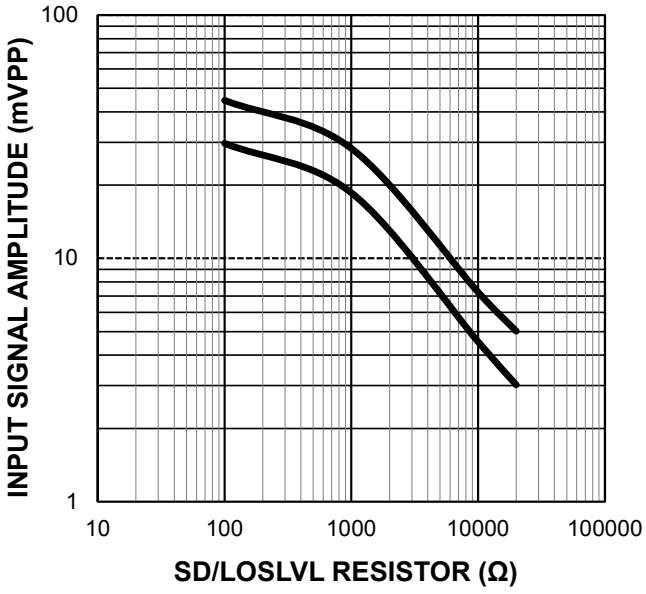

LOS Hysteresis vs. SD/LOSLVL Resistor



Typical Linear Mode 10.3G Output with 5mV$_{PP}$ Differential Input Signal

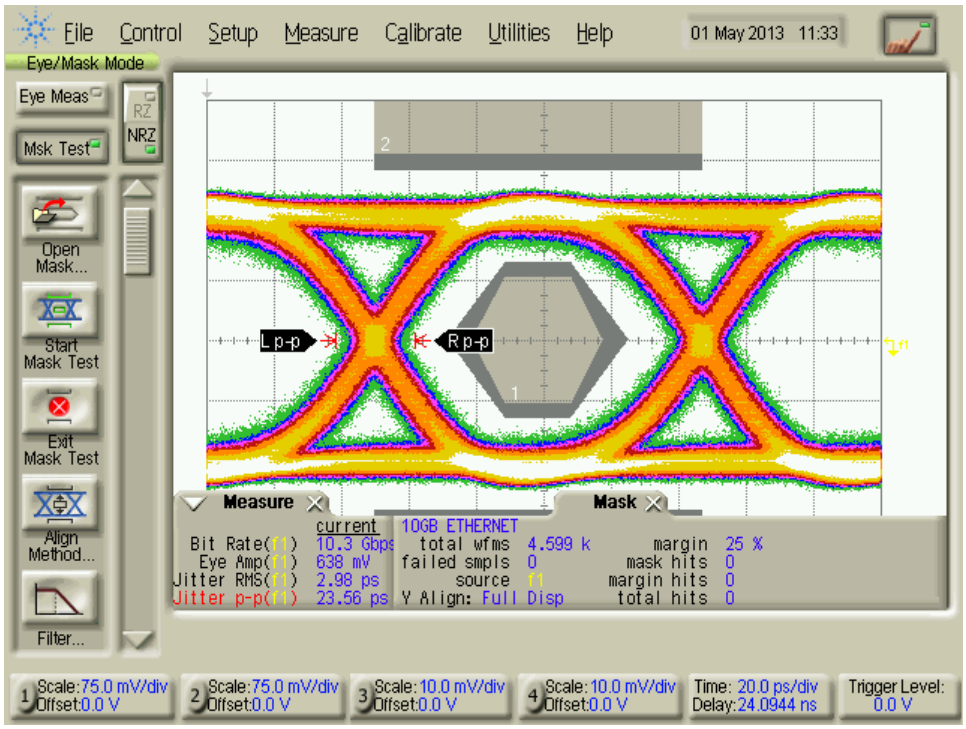

FOMhelp@micrel.com or (408) 955-1690

Functional Block Diagram

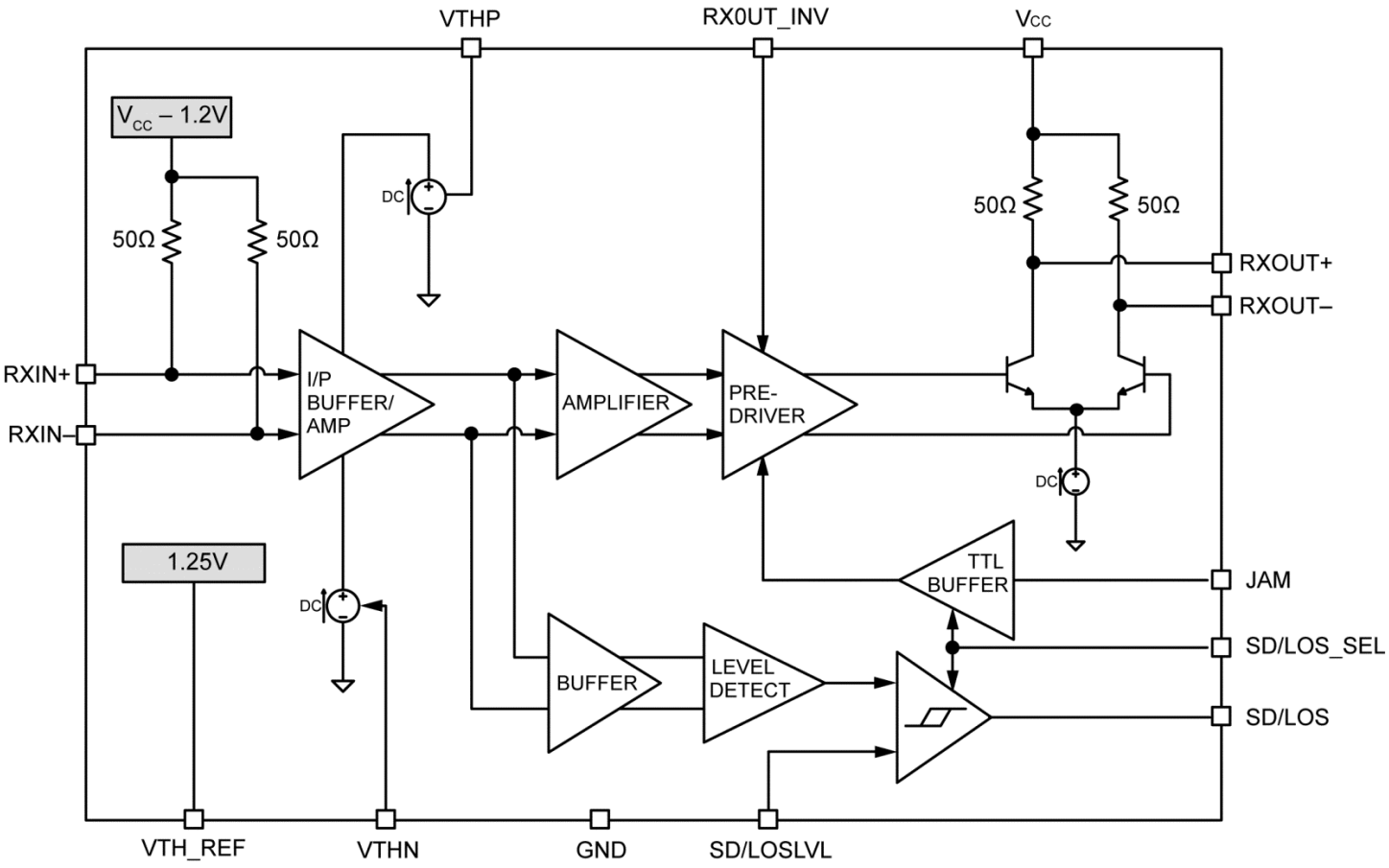

Functional Description

The SY88053CL is a high-sensitivity, high-bandwidth limiting post amplifier. It operates from a single +3.3V power supply across the entire industrial temperature range of –40°C to +85°C.

Signals with data rates from 1.0625Gbps to 12.5Gbps and amplitudes as small as $5mV_{pp}$ are supported. Figure 1 shows the allowed input voltage swing.

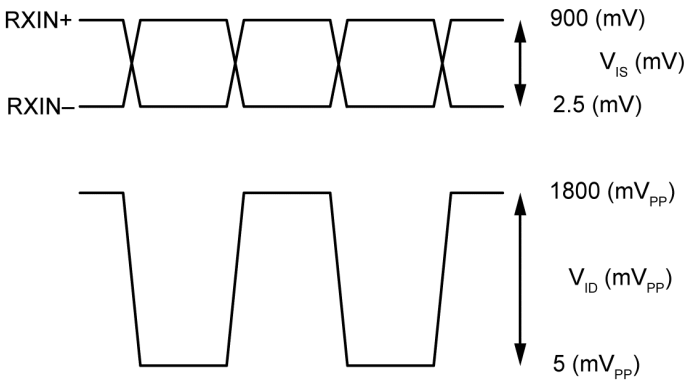

Figure 1. V_{IS} and V_{ID} Definition

The SY88053CL has a selectable SD or LOS status output signal that can be fed back to the JAM input to perform the SQUELCH function for output stability if there is no signal at the input. SD/LOSLVL sets the sensitivity of the input amplitude detection.

In applications where the noise is not evenly distributed between the high and the low levels of the signal, such as links using EDFA amplifiers, the zero crossing point (decision threshold) of the signal can be adjusted, using the VTHN and VTHP pins to optimize the performance of the link.

Input Amplifier/Buffer

Figure 2 shows a simplified schematic of the input stage. The high sensitivity of the input amplifier allows signals as small as $5mV_{pp}$ to be detected and amplified. The input amplifier allows input signals as large as $1800mV_{pp}$. Input signals are amplified with a typical 44dB differential voltage gain. The user will need to select the appropriate AC coupling capacitor value for their application.

Output Buffer

The SY88053CL CML output buffer is designed to drive 50Ω impedance transmission lines and is internally terminated with 50Ω to V_{CC}. Figure 3 shows a simplified schematic of the output stage. The user will need to select the appropriate AC coupling capacitor value for their application.

Signal Detect / Loss of Signal

The SY88053CL generates a user-selectable (SD/LOS_SEL pin) signal detect (SD) or loss of signal (LOS) open-collector TTL output, as shown in Figure 4. LOS is used to determine whether the input amplitude is too small to be considered as a valid input. LOS asserts high if the input amplitude falls below the threshold set by SD/LOSLVL and de-asserts low otherwise. LOS can be fed back to the JAM input to perform the SQUELCH function and to maintain output stability under a LOS condition. JAM de-asserts the true output signal low without removing the input signals. Typically, 4dB LOS hysteresis is provided to prevent chattering.

When SD/LOSLVL is used to select the SD output on the SD/LOS pin, SD is asserted when the differential input signal amplitude exceeds the level set by the SD/LOSLVL resistor. The JAM operation is inverted when SD is selected.

Signal Detect / Loss of Signal Level Setting

A programmable SD/LOS level set pin (SD/LOSLVL) sets the threshold of the input amplitude detection. Connecting an external resistor between V_{CC} and SD/LOSLVL sets the threshold voltage. This voltage ranges from V_{CC} to V_{CC} – 1.3V. The external resistor creates a voltage divider between V_{CC} and V_{CC} – 1.3V, as shown in Figure 5.

Hysteresis

The SY88053CL provides typically 4dB LOS electrical hysteresis, which is defined as 20log ($VIN_{LOS_De\text{-}Assert}$ ÷ VIN_{LOS_Assert}). Because the relationship of the voltage output of the ROSA to optical power at its input is linear, the optical hysteresis is typically half of the electrical hysteresis reported in the datasheet. In practice the ratio between electrical and optical hysteresis is found to be between 1.5 and 1.8. Thus, 4dB electrical hysteresis corresponds to an optical hysteresis within the range of 2dB to 2.4dB.

Signal Crossing Point Adjustment

To optimize the decision threshold level, and so the BER of the optical link where the noise is unevenly distributed between the high and the low levels, the SY88053CL provides two pins for output signal crossing point adjustment (decision threshold) control.

The output signal crossing can be adjusted by connecting VTHN (pin 5) to VTH_REF (pin 6), and applying a DC signal at VTHP (pin 16). By varying the DC signal at VTHP from 0V to 2.5V while the input signal to the post amplifier is less than $60mV_{PP}$, the crossing point of the output signal changes from approximately 30% to 70%, reaching 50% when VTHP = VTH_REF = 1.25V. If the crossing point control function is not needed, VTHN and VTHP must be connected to GND.

Functional Circuit Structure

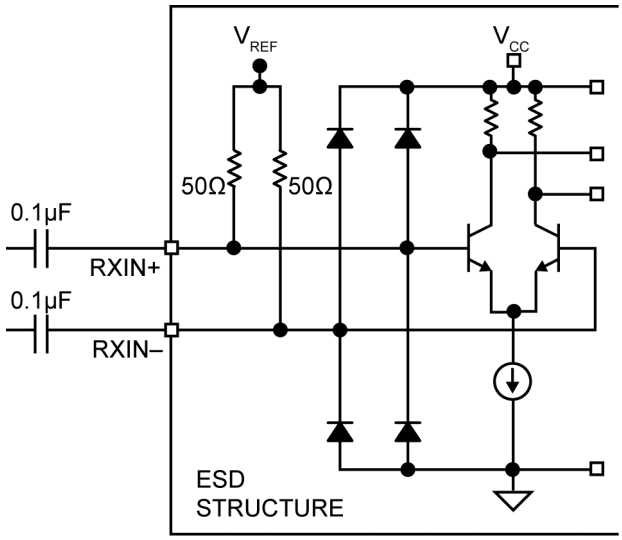

Figure 2. Typical Input Structure

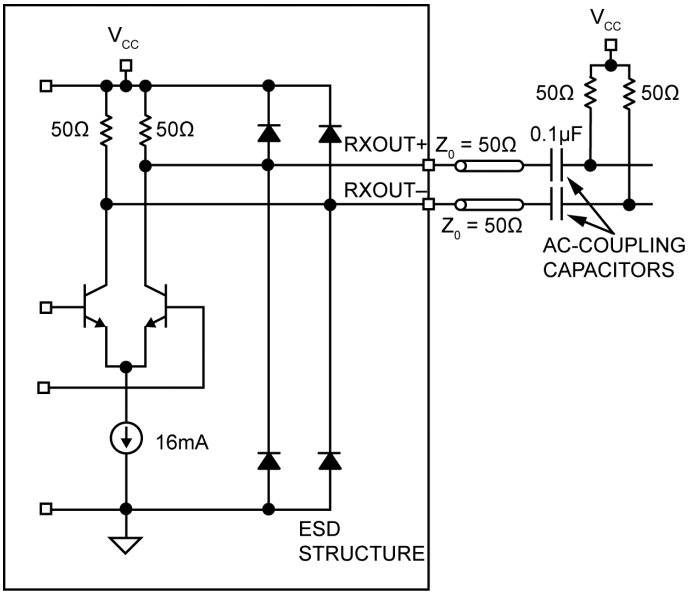

Figure 3. Typical Output Structure

FOMhelp@micrel.com or (408) 955-1690

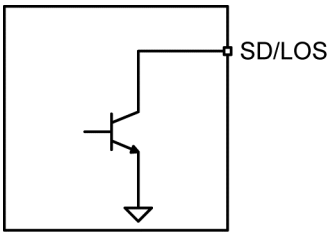

Figure 4. Typical SD/LOS Output Structure

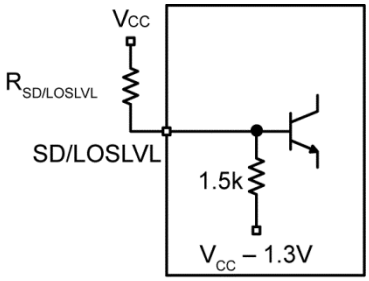

Figure 5. Typical SD/LOSLVL Setting Circuit

Related Product and Support Documentation

Document Number	Title	Application Note Link
AN-45	Notes on Sensitivity and Hysteresis in Micrel Post Amplifiers	www.micrel.com/_PDF/HBW/App-Notes/an-45.pdf

Package Information[15]

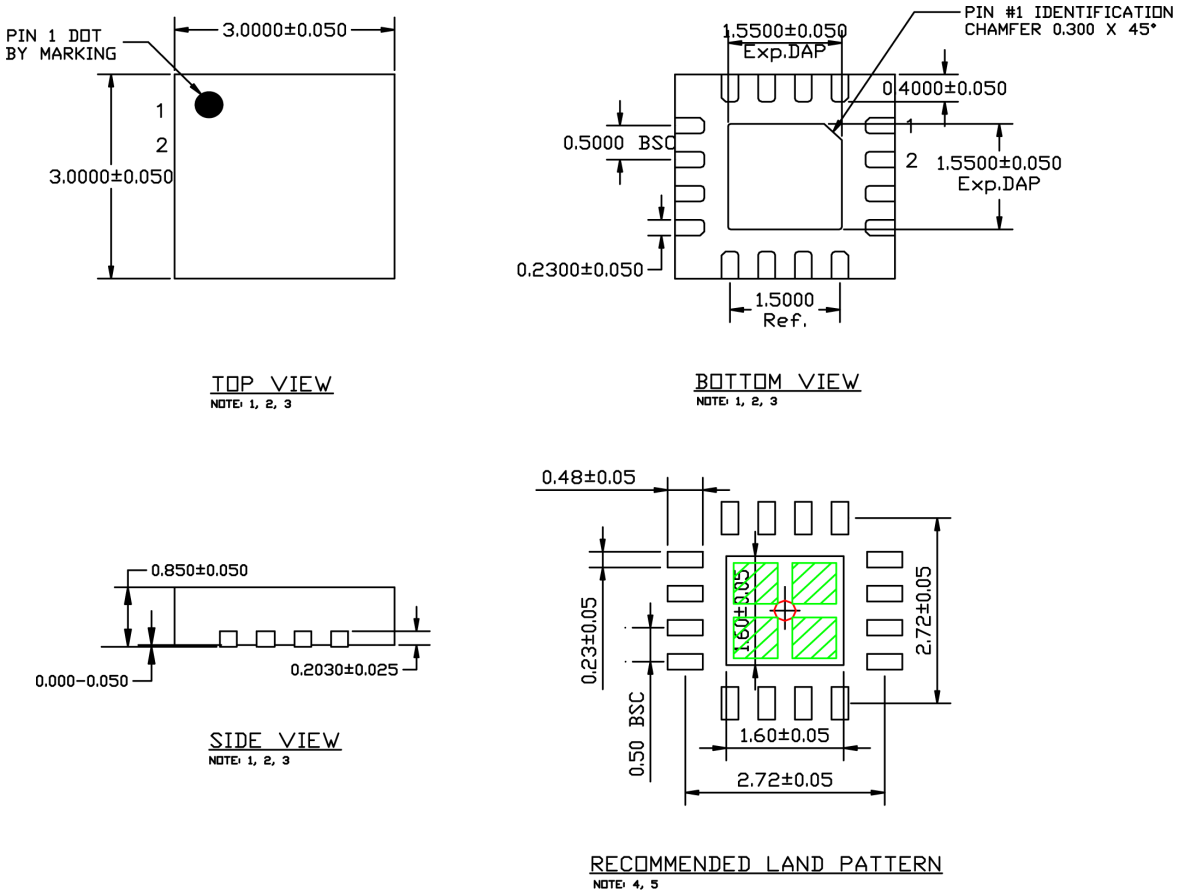

NOTE:
1. MAX PACKAGE WARPAGE IS 0.05 MM
2. MAX ALLOWABLE BURR IS 0.076MM IN ALL DIRECTIONS
3. PIN #1 IS ON TOP WILL BE LASER MARKED
4. RED CIRCLE IN LAND PATTERN INDICATE THERMAL VIA. SIZE SHOULD BE 0.30-0.3M IN DIAMETER AND SHOULD BE CONNECTED TO GND FOR MAX THERMAL PERFORMANCE
5. GREEN RECTANGLES (SHADED AREA) indicate SOLDER STENCIL OPENING ON EXPOSED PAD AREA. SIZE SHOULD BE 0.60x0.60 MM IN SIZE, 0.20 MM SPACING.

16-Pin (3mm x 3mm) QFN-16

Note:

15. Package information is correct as of the publication date. For updates and most current information, go to www.micrel.com.

MICREL, INC. 2180 FORTUNE DRIVE SAN JOSE, CA 95131 USA

TEL +1 (408) 944-0800 FAX +1 (408) 474-1000 WEB http://www.micrel.com

Micrel makes no representations or warranties with respect to the accuracy or completeness of the information furnished in this data sheet. This information is not intended as a warranty and Micrel does not assume responsibility for its use. Micrel reserves the right to change circuitry, specifications and descriptions at any time without notice. No license, whether express, implied, arising by estoppel or otherwise, to any intellectual property rights is granted by this document. Except as provided in Micrel's terms and conditions of sale for such products, Micrel assumes no liability whatsoever, and Micrel disclaims any express or implied warranty relating to the sale and/or use of Micrel products including liability or warranties relating to fitness for a particular purpose, merchantability, or infringement of any patent, copyright or other intellectual property right.

Micrel Products are not designed or authorized for use as components in life support appliances, devices or systems where malfunction of a product can reasonably be expected to result in personal injury. Life support devices or systems are devices or systems that (a) are intended for surgical implant into the body or (b) support or sustain life, and whose failure to perform can be reasonably expected to result in a significant injury to the user. A Purchaser's use or sale of Micrel Products for use in life support appliances, devices or systems is a Purchaser's own risk and Purchaser agrees to fully indemnify Micrel for any damages resulting from such use or sale.

© 2013 Micrel, Incorporated.