LUMINIS®

SY302 SERIES
SYRIOS - LED
Wall up/down light

TYPE: _____ QUANTITY: _____ PROJECT: _____

CATALOG NUMBER:								
	FIXTURE	WATTAGE	VOLTAGE	FINISH	OPTION	OPTION	OPTION	OPTION

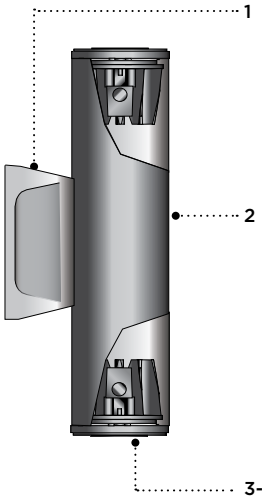

1- Cast aluminum driver housing, includes galvanized steel wall mount pressure plate.
2- Extruded aluminum cylindrical housing.
3- Sealed cast aluminum up/down light assembly.
4- Sealed cast aluminum lens frame.
5- Clear tempered glass lens.
6- Faceted specular aluminum reflector.

All stainless steel hardware.

ADA Compliant



MATERIALS
Syrios LED is made of corrosion resistant 356 aluminum alloy with a copper (CU) content of less than 0.1%.
The main housing is made of seamless extruded aluminum, with an integrally sealed LED light module designed for optimal heat dissipation, and lighting performance.
Syrios LED SY302 series is standard with 26º optics. See options section for alternate selection.

ELECTRICAL
DRIVER Standard 0-10V dimmable LED driver is 120/277V multi volt (50-60HZ) with operating temperatures of -30ºC/-22ºF to 60ºC/140ºF. Output over voltage. Output over current and output short circuit protection with auto-recovery.

LED Standard 4000K LED engine included. Optional 3000K, 3500K & 5000K. Removable modular LED platform.

LIFE
54,000hrs $L_{75}B_{50}$ (based on IESNA TM-21 Test Method and LM-80 data).
68,000hrs $L_{70}B_{50}$ (calculated projection from LM-80 data).

FINISH
Five-stage preparation process including preheating of cast aluminum parts for air extraction, and an environmentally friendly alloy sealant. Polyester powder coating is applied through an electrostatic process and oven cured for long term finish.

MOUNTING
The mounting plate is designed to fit on a 2X4" (51x102) rectangular electrical box using 3.156" (80) C/C mounting holes.
Optional trimming plate for octagonal jbox (option MT4).

CERTIFICATION
Tested to UL1598 and CSA 22.2 #250. ETL listed wet location.
Rated IP66. CE Certification on request.

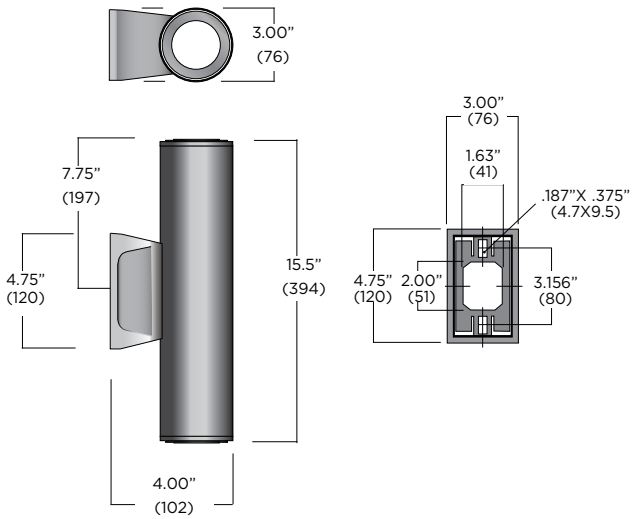

Mar 2015 Rev 1

LUMINIS | Toll free: 866.586.4647 Fax: 514.683.8872 Email: info@luminis.com
260 Labrosse, Pointe-Claire (QC) Canada H9R 5L5

LUMINIS.COM

Luminaires may be altered for design improvement or discontinued without prior notice.

TYPICAL PHOTOMETRY SUMMARY

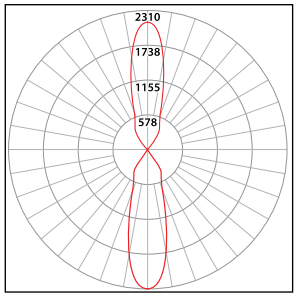

Descriptive Information

SY302-L2W11r0
Total Lms: 1945 Lumens
Total Input Watts: 24.2 W
Source: LED
Efficacy: 80.37 Lumens/Watt
BUG: B1-U4-G0
CCT/CRI: 4000K/80
Maximum Candela: 2310 @ 0 deg

Please visit our web site www.luminis.com for complete I.E.S. formatted download data.

LUMINAIRE SELECTION

MODEL#



☐ SY302

LED LIGHT SELECTION

SUFFIX	INPUT WATTS	DELIVERED LUMENS	CRI	CCT °K
☐ L2W11r0	24W	1945	80	4000K

VOLTAGE

☐ 120V
☐ 277V

FINISH

STANDARD COLORS

☐ WHT Snow white
☐ BKT Jet black
☐ BZT Bronze
☐ MST Matte silver
☐ GRT Titanium gray
☐ DGT Gun metal
☐ CHT Champagne

(Refer to color chart)

OPTIONAL COLORS

☐ CS Custom color
☐ RAL RAL# color

☐ SS3 #316 Stainless steel body

OPTIONS

ELECTRICAL

☐ **FS** Fuse
☐ **DS** Dual circuit switching (independent uplight & downlight control)

MOUNTING

☐ **SWK** Adaptor box for surface 3/4" conduit feed
☐ **MT4** Trimming plate for octagonal box

COLOR FILTER

To select color filter add U & D to suffix. (i.e. R3U-G3D is red filter uplight & green filter downlight, B3U-B3D is blue filter uplight & blue filter downlight)
☐ **R3** Red color filter
☐ **G3** Green color filter
☐ **B3** Blue color filter

LIGHT & OPTICS

Alternate CCT °K LED (LCF: Lumen conversion factor)
☐ **2K3** 3000K CCT 90 CRI (LCF: 0.78)
☐ **2K35** 3500K CCT 80 CRI (LCF: 0.983)
☐ **2K5** 5000K CCT 80 CRI (LCF: 1.01)
☐ **RGBW** RGBW color changing with DMX512 ready
☐ **RGBW2** RGBW color changing for uplight & downlight with DMX512 ready

Alternate reflector optics (26º Standard reflector)
Reflector/spread lens combinations can be selected independently for up/down light. Select both reflector type by adding U & D to the suffix. (i.e. R40U-R26D is 40º up and 26º down)
☐ **R40** 40º flood optic
☐ **LSL** Linear spread lens
☐ **LSL2** Linear spread lens for uplight & downlight

Mar 2015 Rev. 1

LUMINIS®

LUMINIS | Toll free: 866.586.4647 Fax: 514.683.8872 Email: info@luminis.com
260 Labrosse, Pointe-Claire (QC) Canada H9R 5L5

Luminaires may be altered for design improvement or discontinued without prior notice.