SUNTSU

Plastic SMT 4 Pad Crystal

SXT144 Series

12.5mm x 4.6mm

Features

- ±15ppm (Tolerance) Available
- Plastic SMD Type
- Tape and Reel

Applications

- Measurement instruments
- Wireless Applications



Part Numbering Guide

SXT 14 4 18 A A 48 - 16.000M

- **SUNTSU CRYSTAL**
- **12.5mm x 4.6mm**
- **4 PAD**
- **LOAD CAPACITANCE**
  6-32 : 6pF - 32pF
- **FREQUENCY TOLERANCE**
  A : ±50ppm
  B : ±30ppm
  C : ±25ppm
  D : ±20ppm
  E : ±15ppm
- **FREQUENCY STABILITY**
  A : ±50ppm
  B : ±30ppm
  C : ±25ppm
  D : ±20ppm
  E : ±15ppm
  F : ±10ppm
- **OPERATING TEMPERATURE RANGE**
  07 : 0°C - +70°C
  16 : -10°C - +60°C
  17 : -10°C - +70°C
  27 : -20°C - +70°C
  38 : -30°C - +85°C
  48 : -40°C - +85°C
- **FREQUENCY**
  MHz

RoHS COMPLIANT

Cage Code: 4GUT4

To customize your parameters contact a Suntsu representative.

Electrical Parameters			Units	Minimum	Typical	Maximum	Remarks
Frequency Range			MHz	3.579		27	
Frequency Tolerance at +25°C			ppm	-15		+15	See part numbering guide for options.
Frequency Stability vs. Op Temp			ppm	-10		+10	See part numbering guide for options.
Frequency Stability vs. Aging			ppm	-5		+5	First year @ +25°C.
Operating Temperature			°C	-40		+85	See part numbering guide for options.
Storage Temperature			°C	-55		+125	
Load Capacitance			pF	6	12.5	32	See part numbering guide for options.
Shunt Capacitance			pF			5	
Drive Level			µW		100		
Insulation Resistance			MΩ	500			@ 100VDC ± 15V.
ESR -	3.500MHz	~ 3.999MHz	Ω			200	Fundamental
	4.000MHz	~ 5.999MHz	Ω			150	Fundamental
	6.000MHz	~ 9.999MHz	Ω			100	Fundamental
	10.000MHz	~ 27.000MHz	Ω			50	Fundamental

Outline Drawing & Recommended Land Pattern

All dimensions are in millimeters (mm) unless otherwise noted. Drawings are not to scale.

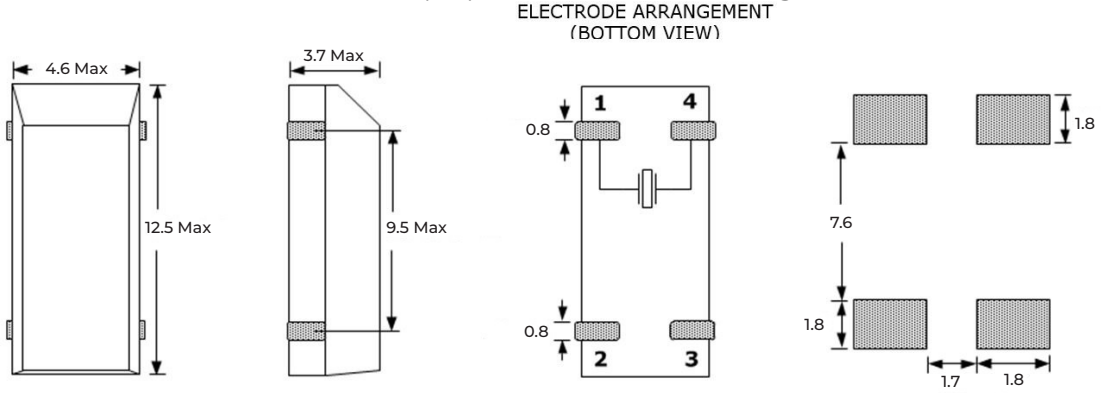

www.suntsu.com

Specifications are subject to change without notice.

Suntsu Electronics, Inc.
142 TECHNOLOGY DR., SUITE 150
IRVINE, CA 92618

Call: +1-949-783-7300 | Fax: +1-949-783-7301

SUNTSU

Plastic SMT 4 Pad Crystal

SXT144 Series

12.5mm x 4.6mm

Reflow Profile & Part Marking

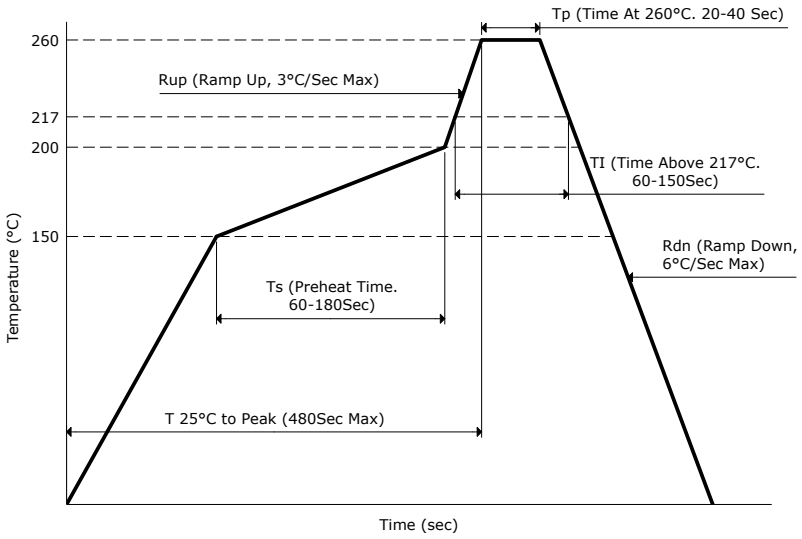

Frequency In MHz

Line 1 : x x . x x x

Tape And Reel Dimensions

All dimensions are in millimeters (mm) unless otherwise noted. Drawings are not to scale.

1,000pcs / Reel

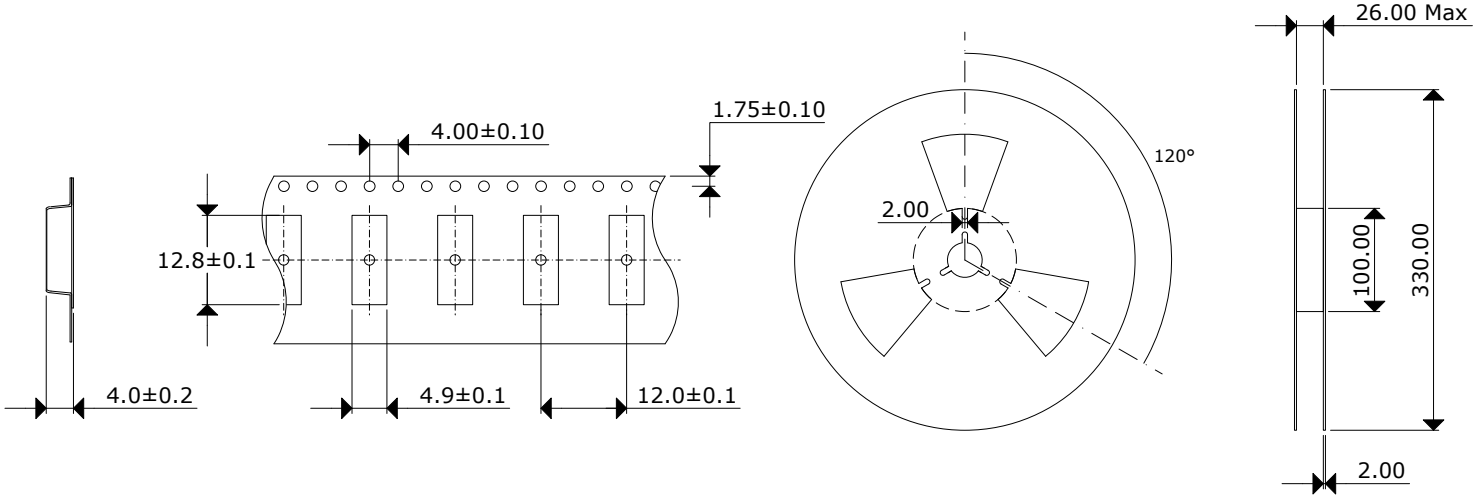

Environmental Specifications		Mechanical Specifications	
Temperature Cycling	MIL-STD-883, Method 1010, Condition B	Mechanical Shock	MIL-STD-202, Method 213, Condition B
Fine Leak Test	MIL-STD-883, Method 1014, Condition A	Vibration	MIL-STD-883, Method 2007, Condition A
Gross Leak Test	MIL-STD-883, Method 1014, Condition C	Resistance to Soldering Heat	MIL-STD-202, Method 210, Condition B
Moisture Resistance	MIL-STD-883, Method 1004	Resistance to Solvents	MIL-STD-202, Method 215
Moisture Sensitivity	J-STD-020, MSL 1	Solderability	MIL-STD-883, Method 2003

www.suntsu.com

Specifications are subject to change without notice.

Suntsu Electronics, Inc.
142 TECHNOLOGY DR., SUITE 150
IRVINE, CA 92618

Call: +1-949-783-7300 | Fax: +1-949-783-7301