PETERMANN TECHNIK
Time & Frequency Components

PETERMANN-TECHNIK GmbH
Amselweg 8
D-86916 Kaufering
Fon +49(0)81 91/305395
Fax +49(0)81 91/305397
info@petermann-technik.de
www.petermann-technik.de

FEATURES

- HIGH RELIABILITY FOR LOW COST
- CHEAPEST AVAILABLE SMD-CLOCK-OSCILLATOR
- FREQUENCY STABILITY TO +-15 PPM AVAILABLE
- SUPPLY VOLTAGE OF 5.0, 3.3, 2.5 AND 1.8 VDC AVAILABLE
- NEW STANDARD FOR SMALL LOW COST OSCILLATORS
- EXTENDED WORKING TEMPERATURE RANGE TO -40/+105°C AVAILABLE

SMD-LOW-COST CLOCK-OSCILLATOR SERIES			SXO-05032	
PACKAGE			Ceramic package 5.0 x 3.2 x 1.2 mm³	
FREQUENCY RANGE		5.0 VOLT	1.0 ~ 125.0 MHz	
		3.3 VOLT	1.0 ~ 125.0 MHz	
		1.8 VOLT	1.0 ~ 100.0 MHz	
FREQUENCY STABILITY			+-15 ~ +-100 PPM	
AGING			+-2 ppm max. per year	
OPERATING TEMPERATURE RANGE			-10/+60°C ~ -40/+105°C	
STORAGE TEMPERATURE RANGE			-55/+125°C	
INPUT	VOLTAGE	+1.8 VDC +-5%	+3.3 VDC +-10%	+5.0 VDC +-10%
	CURRENT	1.0 ~ 4.0 MHz = 10 mA max.	1.0 ~ 4.0 MHz = 10 mA max.	1.0 ~ 4.0 MHz = 10 mA max.
		4.0 ~ 32.0 MHz = 20 mA max.	4.0 ~ 32.0 MHz = 20 mA max.	4.0 ~ 32.0 MHz = 30 mA max.
		32.0 ~ 80.0 MHz = 30 mA max.	32.0 ~ 80.0 MHz = 30 mA max.	32.0 ~ 80.0 MHz = 45 mA max.
		80.0 ~ 100.0 MHz = 40 mA max.	80.0 ~ 100.0 MHz = 40 mA max.	80.0 ~ 100.0 MHz = 80 mA max.
			Lower input currents are available on request. Please indicate the special value when required.	
OUTPUT	SYMMETRY	STANDARD	40/60%	
		OPTION	45/55%	
	RISE AND FALL TIME		5 ns typical / 10 ns max.	
	"0" LEVEL	TTL 5 VOLT	0.4 V max.	
	"1" LEVEL		+2.4 V min.	
	"0" LEVEL	CMOS 5 VOLT	10% VDD max.	
	"1" LEVEL		90% VDD min.	
	"0" LEVEL	TTL 3.3 VOLT	0.4 V max.	
	"1" LEVEL		+1.4 V min.	
	"0" LEVEL	CMOS 3.3 VOLT	10% VDD min.	
	"1" LEVEL		90% VDD max.	
	"0" LEVEL	CMOS 1.8 VOLT	10% VDD min.	
	"1" LEVEL		90% VDD max.	
	LOAD	TTL	1 ~ 10 TTL	
		CMOS	15 ~ 50 pF (1.8 VDC = 15 pF max.)	
PIN 1		STANDARD	WITHOUT ENABLE/DISABLE FUNCTION	
		OPTION	WITH ENABLE/DISABLE FUNCTION	
OTHER PARAMETERS ARE AVAILABLE ON REQUEST / CREATE HERE YOUR SPECIFICATION				

REV.02 / March 2008

PETERMANN TECHNIK
Time & Frequency Components

PETERMANN-TECHNIK GmbH
Amselweg 8
D-86916 Kaufering
Fon +49(0)81 91/30 53 95
Fax +49(0)81 91/30 53 97
info@petermann-technik.de
www.petermann-technik.de

PART NUMBERING SYSTEM

EXAMPLE	SXO3-05032-S-E-50-W-27.000MHz-T

SERIES	SXO-05032 FOR 5 VOLT
	SXO3-05032 FOR 3.3 VOLT
	SXO18-05032 FOR 1.8 VOLT
SYMMETRY	BLANK FOR 40/60%
	S FOR 45/55%
PIN 1 ENABLE/DISABLE	BLANK FOR NO E/D
	E FOR E/D
FREQUENCY STABILITY	BLANK FOR 100 PPM
	ANY 15 ~ 50 PPM
TEMPERATURE RANGE	BLANK FOR 0/+70°C
	N = -10/+60°C
	M = -20/+70°C
	W = -40/+85°C
	Y = -40/+105°C
FREQUENCY	FREQUENCY IN MHz
TAPE AND REEL	-T

OUTLINE DRAWING OF SXO-05032

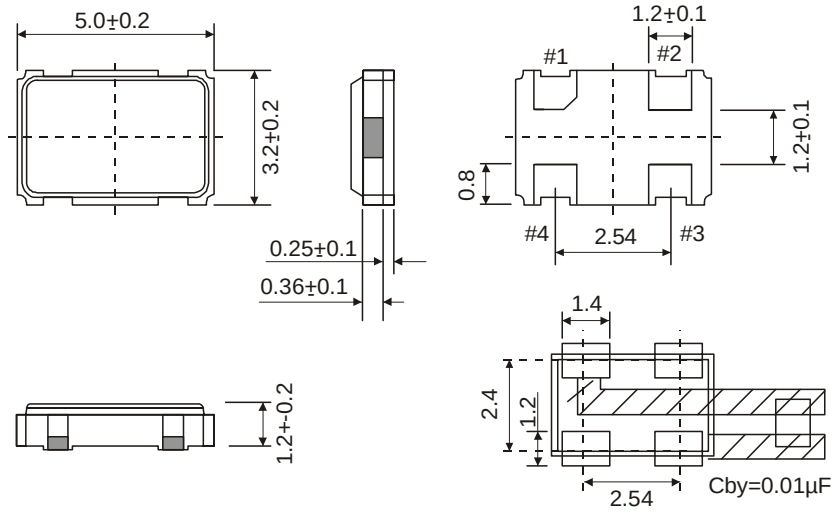

PIN	FUNCTION
#1	Not Connected or Enable / Disable
#2	GND
#3	Output
#4	Vcc

Unit:mm

PETERMANN TECHNIK
Time & Frequency Components

PETERMANN-TECHNIK GmbH
Amselweg 8
D-86916 Kaufering
Fon +49(0)81 91/305395
Fax +49(0)81 91/305397
info@petermann-technik.de
www.petermann-technik.de

TEST CIRCUIT CMOS

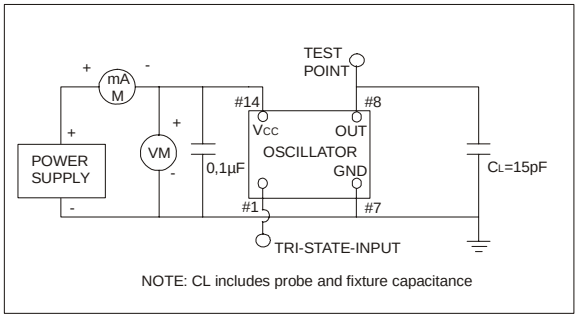

NOTE: CL includes probe and fixture capacitance

TEST CIRCUIT TTL

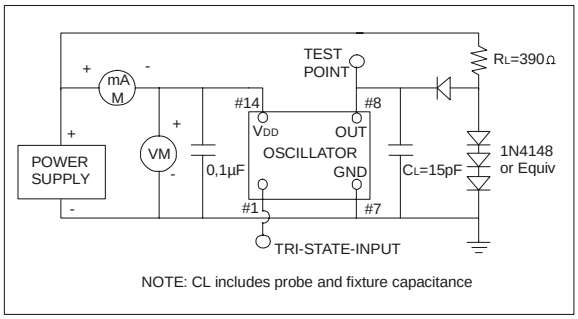

NOTE: CL includes probe and fixture capacitance

OUTPUT WAVE FORM CMOS

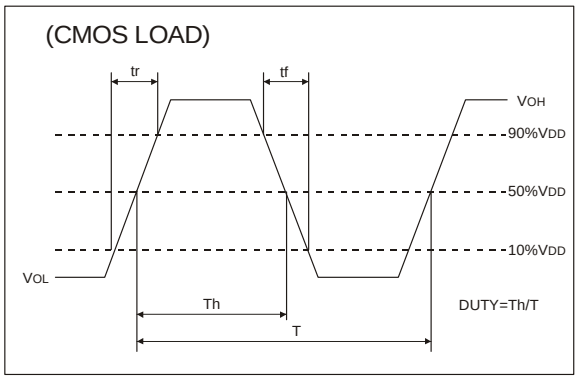

OUTPUT WAVE FORM TTL

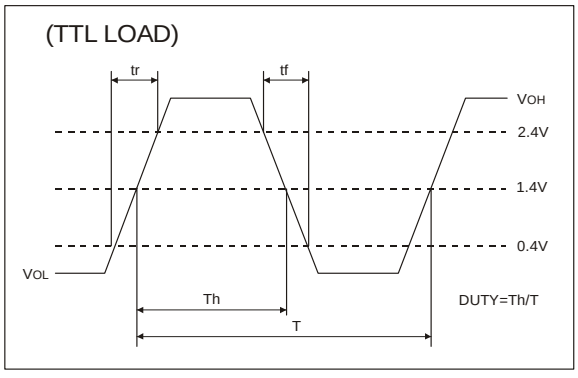

INPUT CURRENT

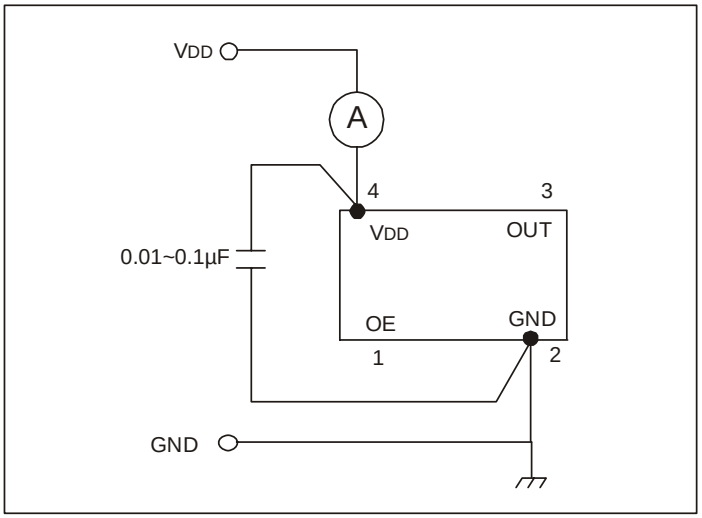

REFLOW SOLDER PROFILE

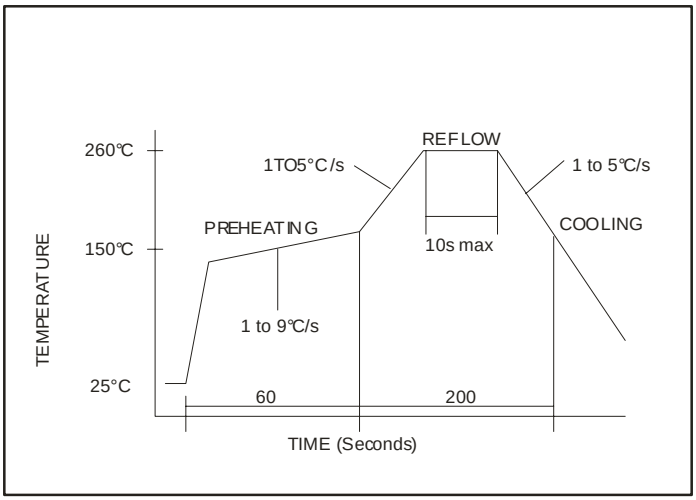

Oscillators can be soldered according to the norm JEDEC J-STD-020C.

TAPE AND REEL DIMENSIONS

