SX-4472

LH3 steering sensor with 5º Torque output, multi-turn Position output, and flex circuit harness.



The LH3 torque and position sensor is ideally suited for demanding Electric Power Steering systems.

ELECTRICAL[1]

Torque Signal Linearity	±3%
Torque Hysteresis	0.5% maximum
Torque Signal Micrograd ient	±30% of theoretical slope over 0.4° interval
Torque Sensed Angle	±5°
Position Signal Linearity (P1, P2)	±1.5%
Position Signal Micrograd ient (P1, P2)	±30% of theoretical slope over 2° interval
Multi-turn Position Accuracy (P3)	±3%
Multi-turn Position Sensed Angle	±720°
Total Resistance	438 Ω ±30%

MECHANICAL

Torque Mechanical Travel	±11.4°
Position Mechanical Travel	Continuous
Turning Torque (rotor to rotor)	0.03 NM maximum
Turning Torque (position rotor to housing)	0.06 NM maximum
Weight	grams maximum

ENVIRONMENTAL

Operating Temperature Range	-40°C to +85°C
Shock	14 ms half-sine at 300 m/s^2
Vibration	10 to 55 Hz with 1 mm P-P constant displacement, 120 hours each of 3 planes
Torque Rotational Life	1 million cycles
Position Rotational Life	1 million cycles
Storage Temperature Range	-40°C to +105°C

[1] *Specifications subject to change without notice.*

Pb RoHS 2 compliant

BI Technologies Corporation
4200 Bonita Place, Fullerton, CA 92835 USA
Phone: 714 447 2345 Website: www.bitechnologies.com
October 14 2015

TT Electronics Make Possible

SX-4472

OUTPUT CHARTS

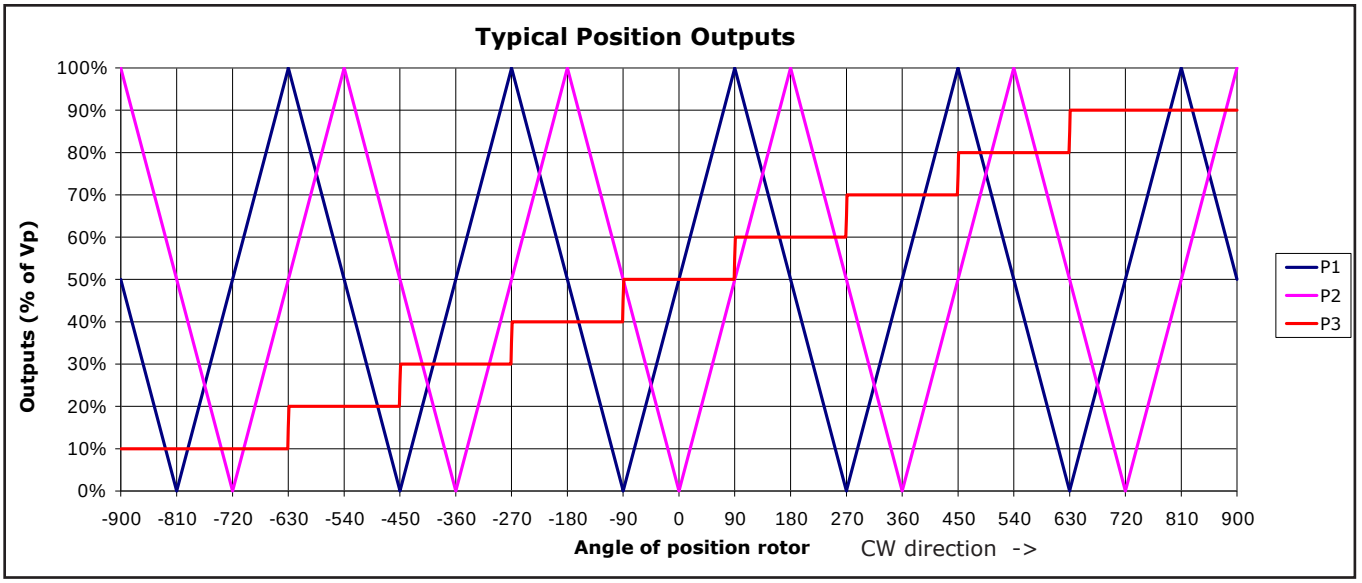

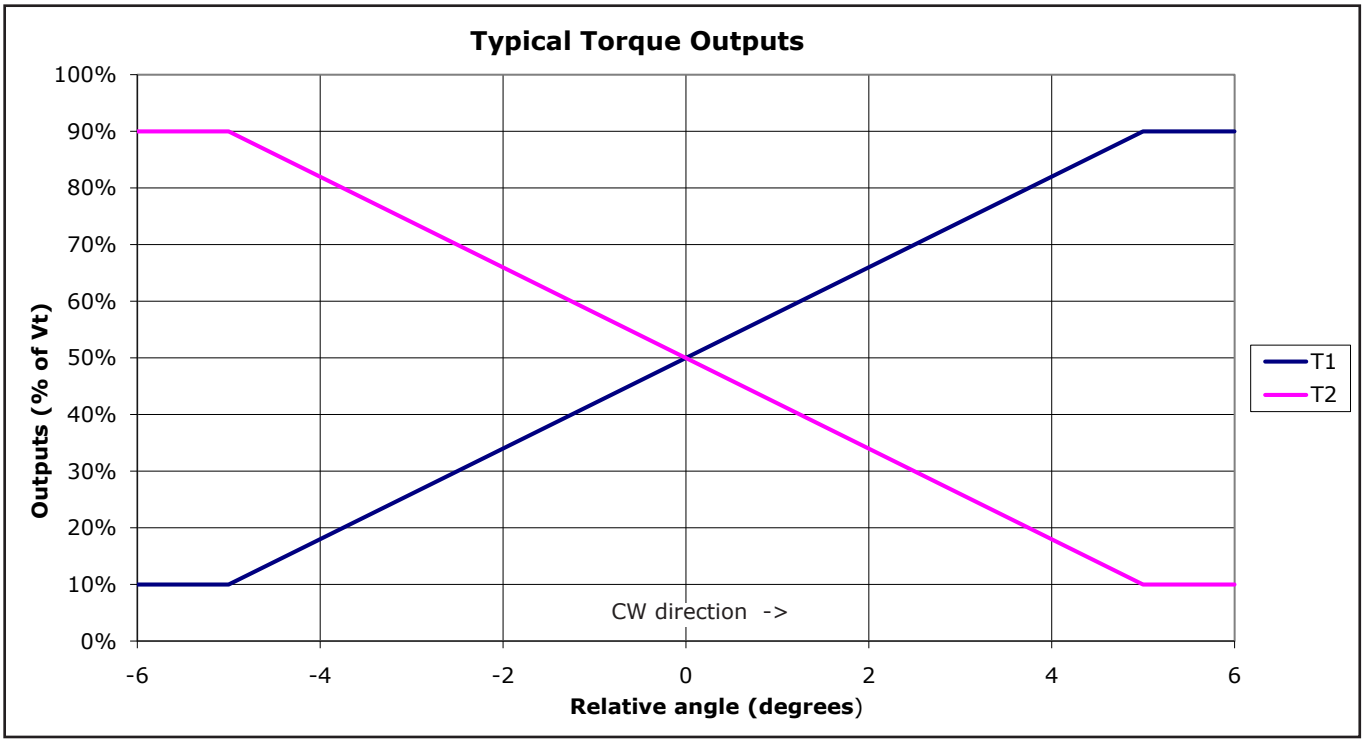

SX-4472

OUTLINE DRAWING

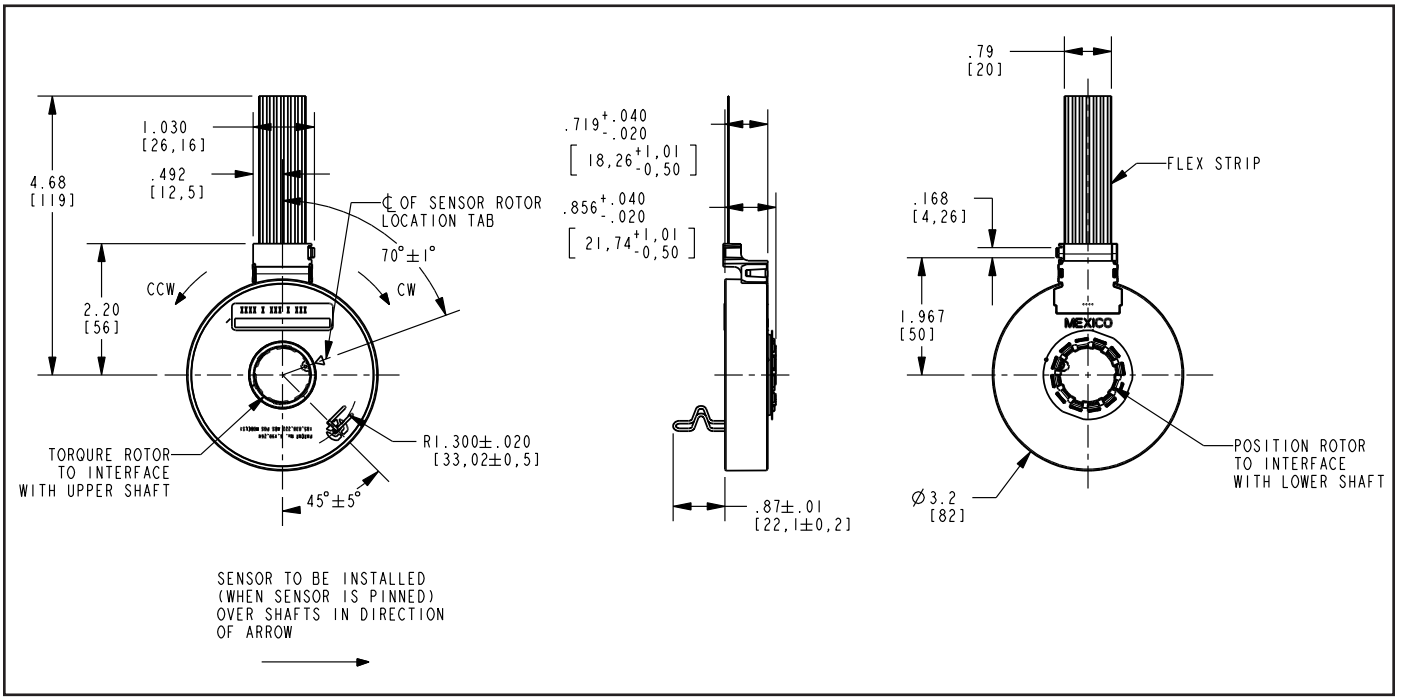

Tolerances ±0.25 mm unless otherwise specified. See drawing # 122-4472-80 for details.

PINOUTS

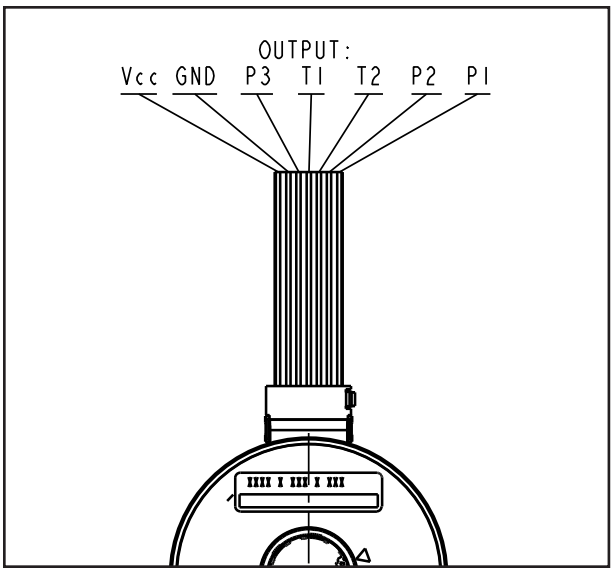

BARCODE LABEL

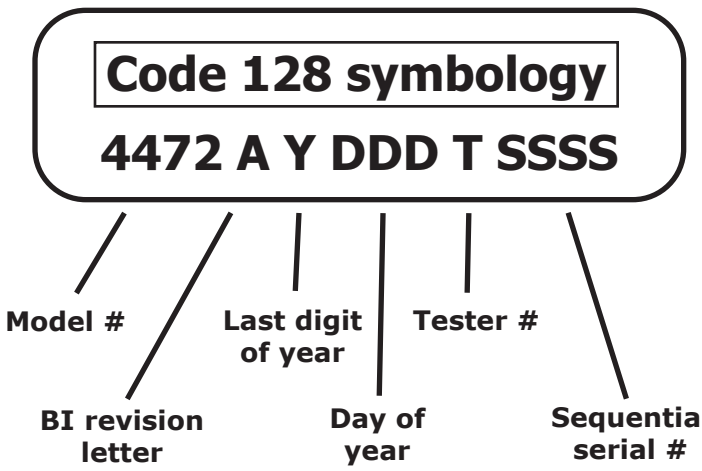

SX-4472

RECOMMENDED INTERFACE

