Samwin®

SW2N40D

N-channel Enhanced mode TO-92/SOT-223 MOSFET

Features

- High ruggedness
- Low $R_{DS(ON)}$ (Typ 2.8Ω)@V_{GS}=10V
- Low Gate Charge (Typ 7nC)
- Improved dv/dt Capability
- 100% Avalanche Tested
- Application:DC-DC,LED

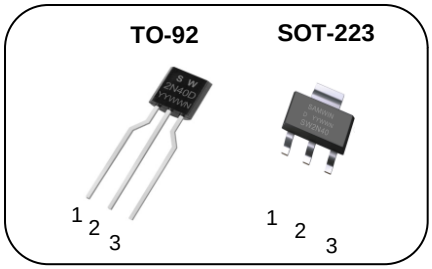

1. Gate 2. Drain 3. Source

BV_{DSS} : 400V
I_D : 2A
$R_{DS(ON)}$: 2.8Ω

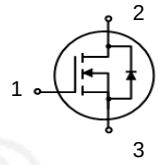

General Description

This power MOSFET is produced with advanced technology of SAMWIN.
This technology enable the power MOSFET to have better characteristics, including fast switching time, low on resistance, low gate charge and especially excellent avalanche characteristics.

Order Codes

Item	Sales Type	Marking	Package	Packaging
1	SWC 2N40D	SW2N40D	TO-92	TAPE
2	SW SA 2N40D	SW2N40D	SOT-223	REEL

Absolute maximum ratings

Symbol	Parameter		Value		Unit
			TO-92	SOT-223	
V_{DSS}	Drain to source voltage		400		V
I_D	Continuous drain current (@T_C=25°C)		2*		A
	Continuous drain current (@T_C=100°C)		1.2*		A
I_{DM}	Drain current pulsed	(note 1)	8		A
V_{GS}	Gate to source voltage		±30		V
E_{AS}	Single pulsed avalanche energy	(note 2)	40		mJ
E_{AR}	Repetitive avalanche energy	(note 1)	5		mJ
dv/dt	Peak diode recovery dv/dt	(note 3)	5		V/ns
P_D	Total power dissipation (@T_C=25°C)		1.1	6.3	W
	Derating factor above 25°C		0.009	0.05	W/°C
T_{STG}, T_J	Operating junction temperature & storage temperature		-55 ~ + 150		°C
T_L	Maximum lead temperature for soldering purpose, 1/8 from case for 5 seconds.		300		°C

*. Drain current is limited by junction temperature.

Thermal characteristics

Symbol	Parameter	Value		Unit
		TO-92	SOT-223	
R_{thjc}	Thermal resistance, Junction to case	32.8	20	°C/W
R_{thja}	Thermal resistance, Junction to ambient	111		°C/W

Copyright@ SEMIPOWER Electronic Technology Co., Ltd. All rights reserved.

Electrical characteristic (T_C = 25°C unless otherwise specified)

Symbol	Parameter	Test conditions	Min.	Typ.	Max.	Unit
Off characteristics						
BV_{DSS}	Drain to source breakdown voltage	V_{GS}=0V, I_D=250uA	400			V
ΔBV_{DSS} / ΔT_J	Breakdown voltage temperature coefficient	I_D=250uA, referenced to 25°C		0.43		V/°C
I_{DSS}	Drain to source leakage current	V_{DS}=400V, V_{GS}=0V			1	uA
		V_{DS}=320V, T_C=125°C			50	uA
I_{GSS}	Gate to source leakage current, forward	V_{GS}=30V, V_{DS}=0V			100	nA
	Gate to source leakage current, reverse	V_{GS}=-30V, V_{DS}=0V			-100	nA
On characteristics						
$V_{GS(TH)}$	Gate threshold voltage	V_{DS}=V_{GS}, I_D=250uA	2.5		4.5	V
$R_{DS(ON)}$	Drain to source on state resistance	V_{GS}=10V, I_D=1A		2.8	3.2	Ω
G_{fs}	Forward transconductance	V_{DS}=30V, I_D=1A		1.2		S
Dynamic characteristics						
C_{iss}	Input capacitance	V_{GS}=0V, V_{DS}=25V, f=1MHz		176		pF
C_{oss}	Output capacitance			30		
C_{rss}	Reverse transfer capacitance			4		
$t_{d(on)}$	Turn on delay time	V_{DS}=200V, I_D=2A,V_{GS}=10V, R_G=25Ω (note 4,5)		5		ns
t_r	Rising time			21		
$t_{d(off)}$	Turn off delay time			14		
t_f	Fall time			21		
Q_g	Total gate charge	V_{DS}=320V, V_{GS}=10V, I_D=2A (note 4,5)		7		nC
Q_{gs}	Gate-source charge			1.5		
Q_{gd}	Gate-drain charge			3.5		
R_g	Gate resistance	V_{DS}=0V, Scan F mode		3.7		Ω

Source to drain diode ratings characteristics

Symbol	Parameter	Test conditions	Min.	Typ.	Max.	Unit
I_S	Continuous source current	Integral reverse p-n Junction diode in the MOSFET			2	A
I_{SM}	Pulsed source current				8	A
V_{SD}	Diode forward voltage drop.	I_S=2A, V_{GS}=0V			1.4	V
t_{rr}	Reverse recovery time	I_S=2A, V_{GS}=0V, dI_F/dt=100A/us		216		ns
Q_{rr}	Reverse recovery charge			662		nC

※. Notes
1. Repeatitive rating : pulse width limited by junction temperature.
2. L = 20mH, I_{AS} = 2A, V_{DD} = 50V, R_G=25Ω, Starting T_J = 25°C
3. I_{SD} ≤ 2A, di/dt = 100A/us, V_{DD} ≤ BV_{DSS}, Staring T_J =25°C
4. Pulse Test : Pulse Width ≤ 300us, duty cycle ≤ 2%.
5. Essentially independent of operating temperature.

Copyright@ SEMIPOWER Electronic Technology Co., Ltd. All rights reserved.

Fig. 1. On-state characteristics

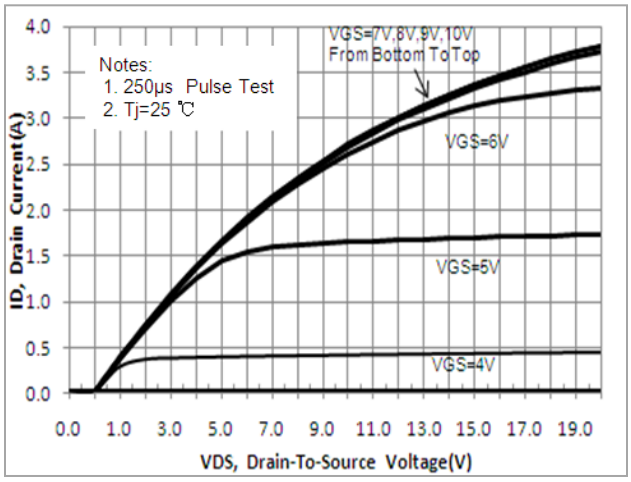

Fig. 2. On-resistance variation vs. drain current and gate voltage

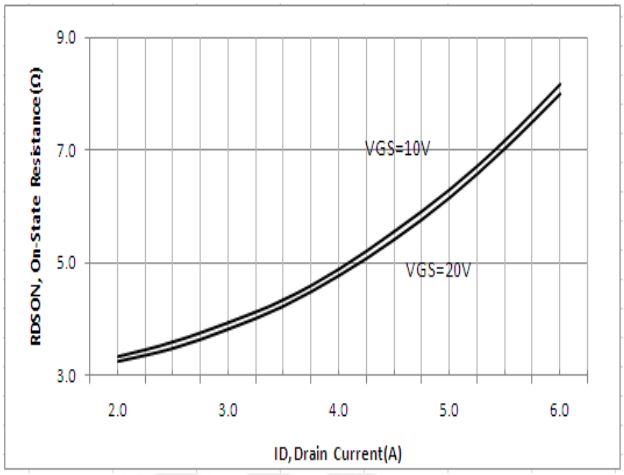

Fig. 3. Gate charge characteristics

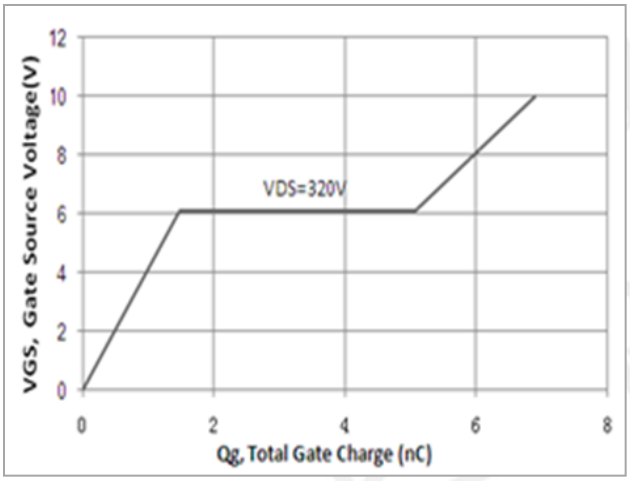

Fig. 4. On state current vs. diode forward voltage

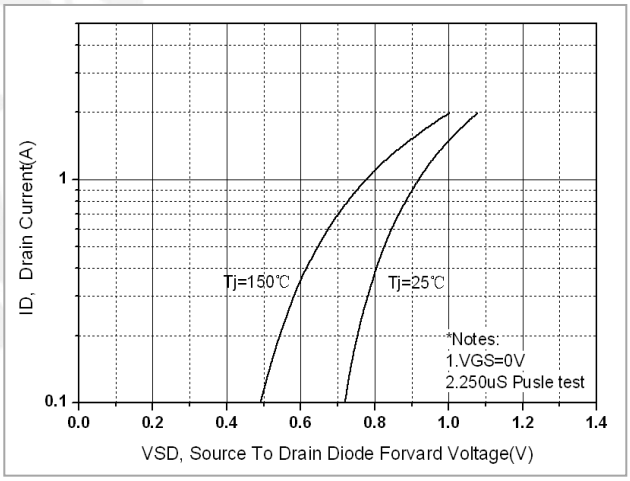

Fig 5. Breakdown Voltage Variation vs. Junction Temperature

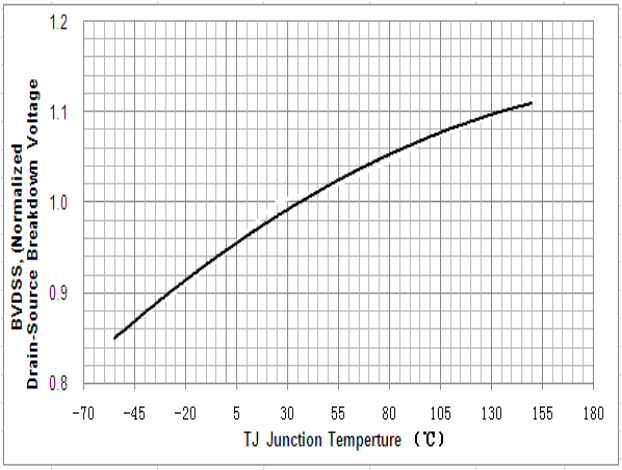

Fig. 6. On resistance variation vs. junction temperature

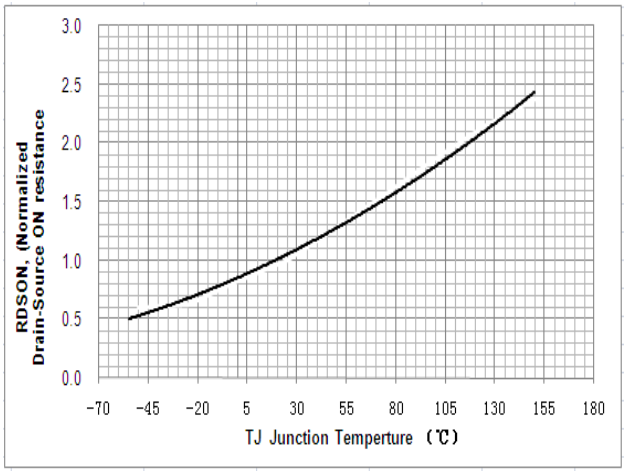

Copyright@ SEMIPOWER Electronic Technology Co., Ltd. All rights reserved.

Fig. 7. Maximum safe operating area（TO-92）

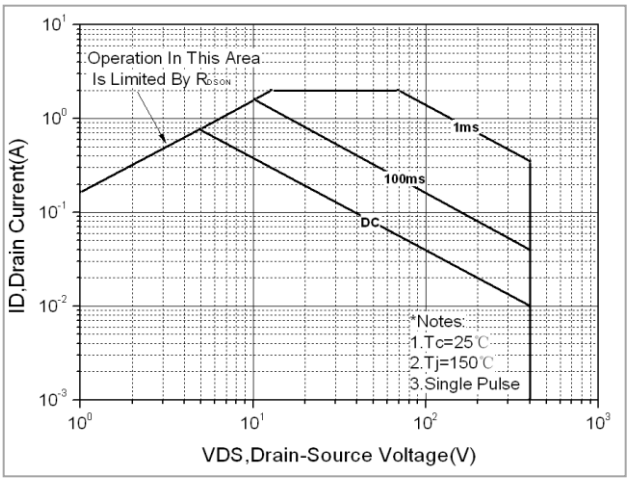

Fig. 8. Maximum safe operating area（SOT-223）

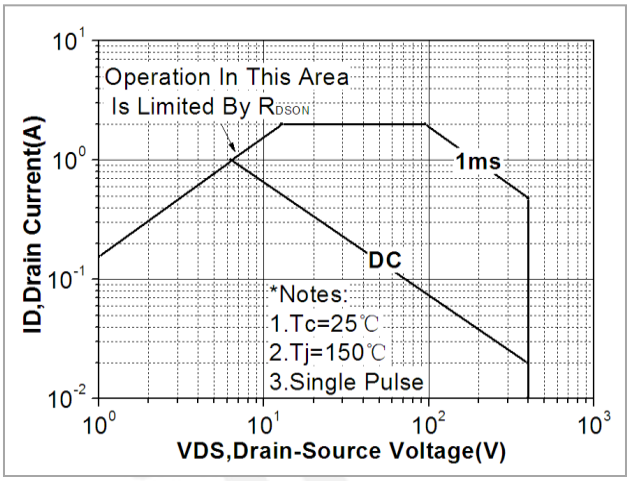

Fig. 9. Capacitance Characteristics

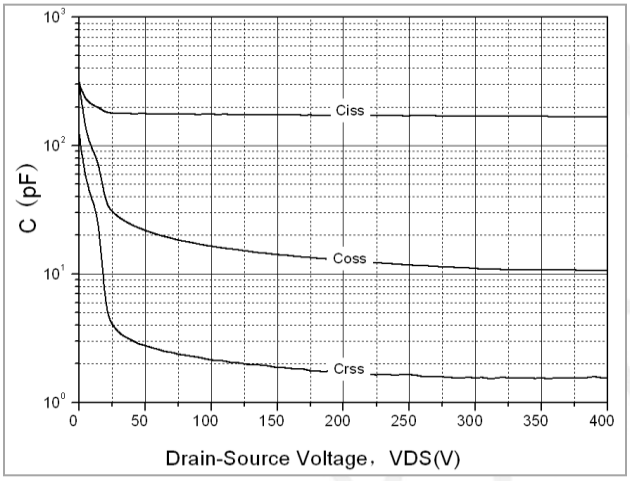

Fig. 10. Transient thermal response curve（TO-92）

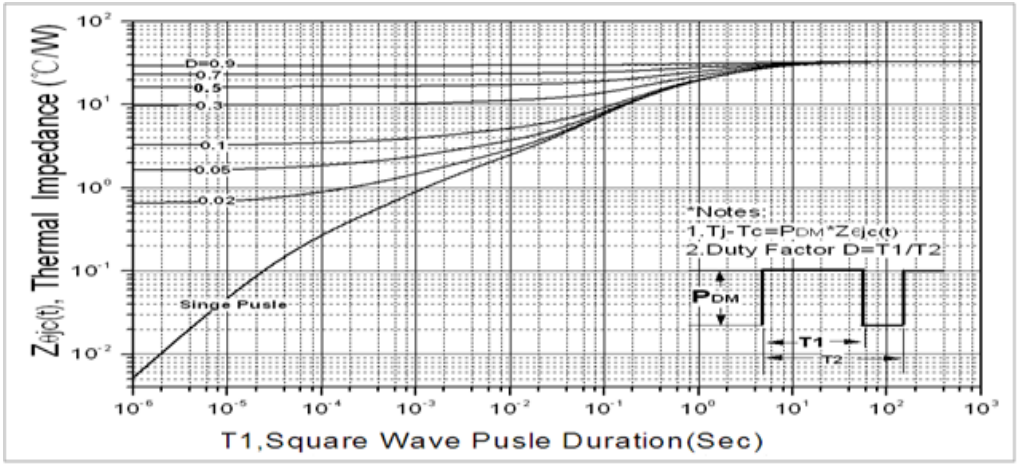

Copyright@ SEMIPOWER Electronic Technology Co., Ltd. All rights reserved.

Fig. 11. Transient thermal response curve（SOT-223）

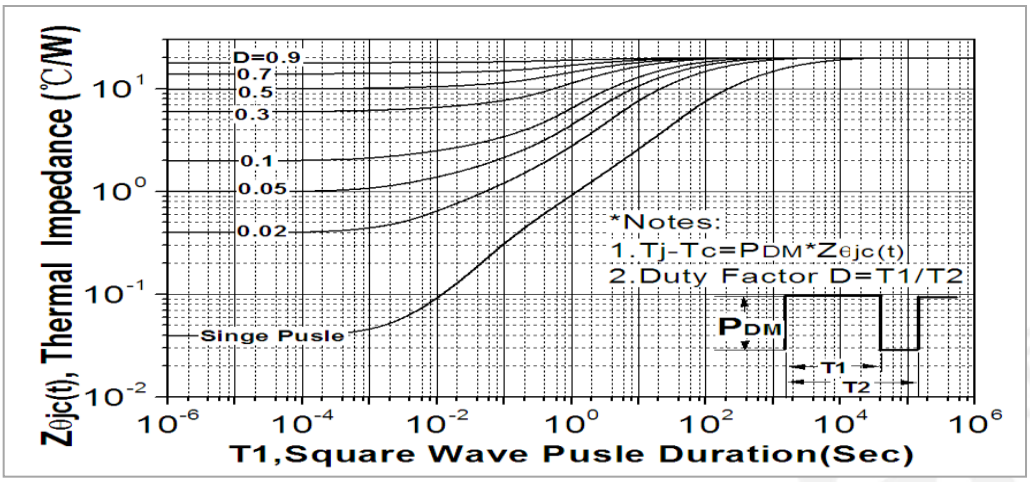

Fig. 12. Gate charge test circuit & waveform

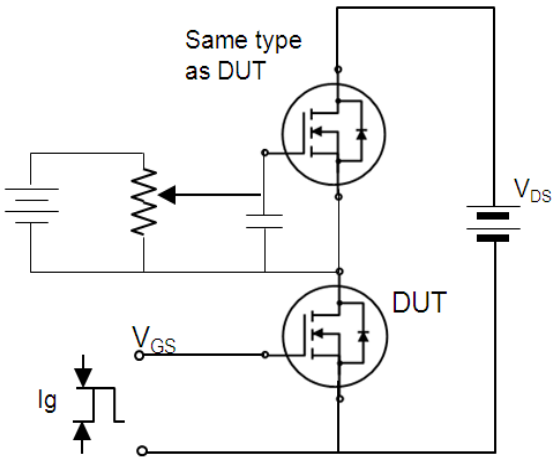

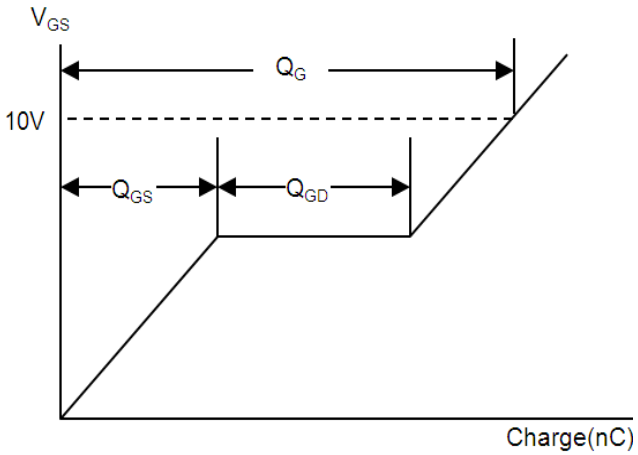

Fig. 13. Switching time test circuit & waveform

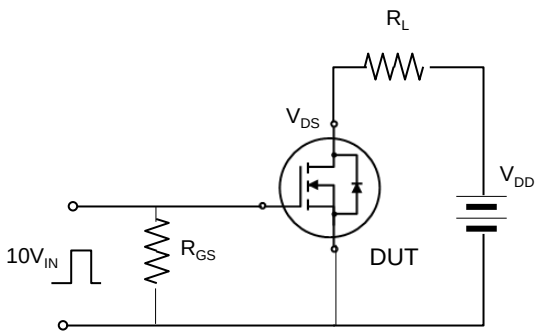

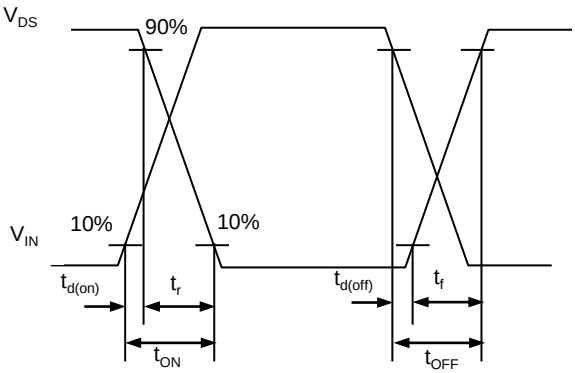

Copyright@ SEMIPOWER Electronic Technology Co., Ltd. All rights reserved.

Fig. 14. Unclamped Inductive switching test circuit & waveform

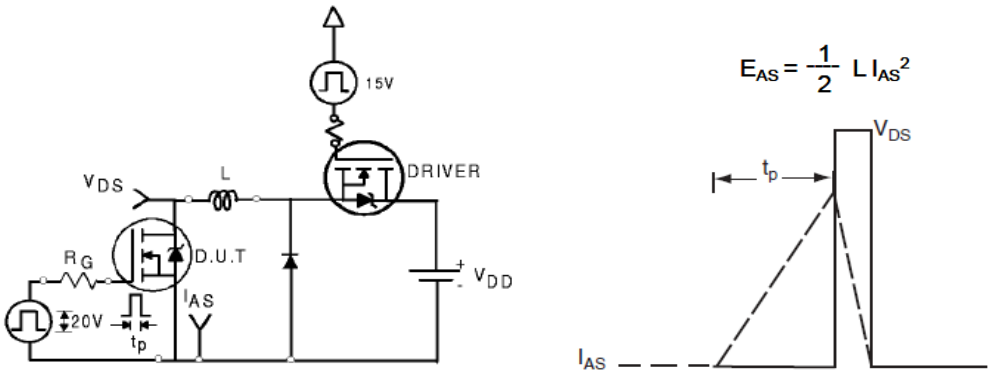

Fig. 15. Peak diode recovery dv/dt test circuit & waveform

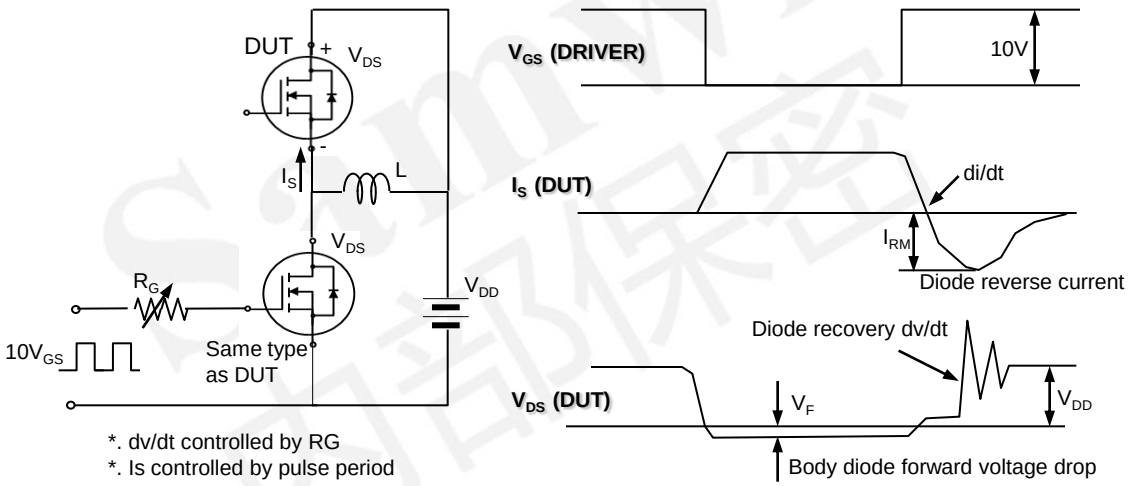

DISCLAIMER

* All the data&curve in this document was tested in XI'AN SEMIPOWER TESTING & APPLICATION CENTER.
* This product has passed the PCT,TC,HTRB,HTGB,HAST,PC and Solderdunk reliability testing.
* Qualification standards can also be found on the Web site (**http://www.semipower.com.cn**)
* Suggestions for improvement are appreciated, Please send your suggestions to **samwin@samwinsemi.com**

Copyright@ SEMIPOWER Electronic Technology Co., Ltd. All rights reserved.