PRELIMINARY

SOLID STATE DEVICES, INC.
14830 Valley View Blvd * La Mirada, Ca 90638
Phone: (562) 404-7855 * Fax: (562) 404-1773

Designer's Data Sheet

SVR1085-3.3M, Z, D2, & D3 thru SVR1085-12M, Z, D2, & D3

1.5 Amps 2.85 thru 12Volts LOW DROPOUT POSITIVE LINEAR VOLTAGE REGULATOR

Part Number /Ordering Information [1/]

SVR1085 - 12 D2 DB H --

Screening [2/]: _ = Not Screened
H = High Rel Level
K = Space Level
R = Radiation Tolerant

Lead Bend: [3/] _ = Straight
DB = Down Bend
UB = Up Bend

Package: [4/] M = TO-254
Z = TO-254Z
D2 = D^2 Pack
D3 = D^3 Pack

Voltage: _ = Variable Voltage
3.3 = 3.3V
3.6 = 3.6V
5 = 5V
12 = 12V

FEATURES:
- **Eutectic Die Attach**
- **Superior to LM117 Types**
- **Complimentary Use with SVR1086 Types**
- **Fast Switching**
- **Isolated Hermetically Sealed Power Package**
- **150°C Operating Temperature**
- **Custom Lead Forming Available**
- **Ceramic Seal Package Available**
- **Class H or K (Space) Screening Available**
- **Radiation Tolerant Devices are Available**

MAXIMUM RATINGS		SYMBOL	VALUE	UNITS
Power Dissipation		P_D	Internally Limited	
Input Voltage [5/]		V_{IN}	30	V
Operating Input Voltage	SVR1085-3.3 & -3.6	$V_{IN(Op)}$	20	V
	SVR1085 -5		20	
	SVR1085-12		25	
In-to-Out Differential	SVR1085-_	$\Delta V_{IN/OUT}$	35	
Operating Junction Temperature	Control Section	T_J	-55 TO +150	°C
	Power Transistor		-55 TO +200	
Storage Temperature		T_{STG}	-65 TO +150	°C

TO-254 (M):

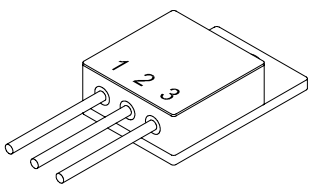

TO-254 (Z):

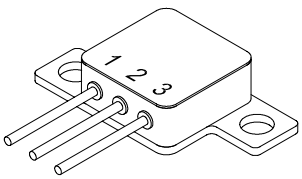

D^2 Pack (D2):

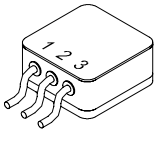

D^3 Pack (D3):

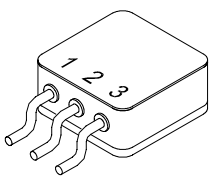

NOTE: All specifications are subject to change without notification.
SCD's for these devices should be reviewed by SSDI prior to release.

DATA SHEET #: SVR0002A

SVR1085-3.3M, Z, D2, & D3 thru SVR1085-12M, Z, D2, & D3

PRELIMINARY

SOLID STATE DEVICES, INC.
14830 Valley View Blvd * La Mirada, Ca 90638
Phone: (562) 404-7855 * Fax: (562) 404-1773

Electrical Characteristics			t°	SYMBOL	MIN	TYP	MAX	UNITS
Output Voltage [7/]	**SVR1085 -3.3**	(0 ≤ I_{OUT} ≤ 5A, 4.5V ≤ V_{IN} ≤ 15V)	*	V_{OUT}	3.235	3.300	3.365	V
	SVR1085 -3.6	(0 ≤ I_{OUT} ≤ 3A, 5V ≤ V_{IN} ≤ 15V)	*		3.500	3.600	3.672	V
	SVR1085 -5	(0 ≤ I_{OUT} ≤ $I_{FULLOAD}$, 6.5V ≤ V_{IN} ≤ 20V)			4.900	5.000	5.100	V
	SVR1085 -12	(0 ≤ I_{OUT} ≤ $I_{FULLOAD}$, (13.5V ≤ V_{IN} ≤ 25V)			11.76	12.00	12.24	V
Line Regulation (I_{OUT} = 0A)	**SVR1085 -3.3**	(4.8V ≤ V_{IN} ≤ 15V)	25	$\frac{\Delta V_{OUT}}{\Delta V_{IN}}$	--	0.5	6.00	mV
			*		--	1.0	6.00	mV
	SVR1085 -3.6	(4.8V ≤ V_{IN} ≤ 15V)	25		--	0.5	6.00	mV
			*		--	1.0	6.00	mV
	SVR1085 -5	(6.5V ≤ V_{IN} ≤ 20V)	25		--	0.5	6.00	mV
			*		--	1.0	6.00	mV
	SVR1085 -12	(13.5V ≤ V_{IN} ≤ 25V)	25		--	1.0	25.0	mV
			*		--	2.0	25.0	mV
Load Regulation [6/, 7/]	**SVR1085 -_**	(ΔV =3V , 10mA≤I_{OUT}≤$I_{FULLOAD}$)	25		--	0.1	0.3	%
			*		--	0.2	0.4	%
	SVR1085 -3.3	(V_{IN} = 5V, 0 ≤ I_{OUT} ≤ 5A)	25		--	3	15	mV
			*		--	7	20	mV
	SVR1085 -3.6	(V_{IN} = 5V, 0 ≤ I_{OUT} ≤ 3A)	25	$\frac{\Delta V_{OUT}}{\Delta I_{OUT}}$	--	3	15	mV
			*		--	7	20	mV
	SVR1085 -5	(V_{IN} = 5.25V, 0 ≤ I_{OUT} ≤ $I_{FULLOAD}$)	25		--	5	20	mV
			*		--	10	35	mV
	SVR1085 -12	(V_{IN} = 8V, 0 ≤ I_{OUT} ≤ $I_{FULLOAD}$)	25		--	12	36	mV
			*		--	24	72	mV
Dropout Voltage [8/] (I_{OUT} = $I_{FULLOAD}$)	**SVR1085 -_**	(ΔV_{REF} = 15V)	*	ΔV	--	1.3	1.5	V
	SVR1085 -3.3	(ΔV_{REF} = 33mV)	*		--	1.3	1.5	V
	SVR1085 -3.6	(ΔV_{REF} = 36mV)	*		--	1.3	1.5	V
	SVR1085 -5	(ΔV_{REF} = 50mV)	*		--	1.3	1.5	V
	SVR1085 -12	(ΔV_{REF} = 120mV)	*		--	1.3	1.5	V
Current Limit	**SVR1085 -_**	(ΔV = 5V)	*	I_{LIMIT}	3.2	4.0	--	A
		(ΔV = 25V)	*		0.02	0.05	--	A
	SVR1085 -3.3	(V_{IN} = 8V)	*		3.2	4.0	--	A
	SVR1085 -3.6	(V_{IN} = 8V)	*		3.2	4.0	--	A
	SVR1085 -5	(V_{IN} = 10V)	*		3.2	4.0	--	A
	SVR1085 -12	(V_{IN} = 17V)	*		3.2	4.0	--	A
Min. Load Current	**SVR1085 -_**	ΔV = 25V	*	I_{LOAD}	--	5	10	A
Quiescient Current	**SVR1085 -3.3**	(V_{IN} = 18V)	*	I_Q	--	5	10	mA
	SVR1085 -3.6	(V_{IN} = 18V)	*		--	5	10	mA
	SVR1085 -5	(V_{IN} = 20V)	*		--	5	10	mA
	SVR1085 -12	(V_{IN} = 25V)	*		--	5	10	mA

NOTE:

* Full Temperature Range

SOLID STATE DEVICES, INC.
14830 Valley View Blvd * La Mirada, Ca 90638
Phone: (562) 404-7855 * Fax: (562) 404-1773

PRELIMINARY

SVR1085-3.3M, Z, D2, & D3 thru SVR1085-12M, Z, D2, & D3

Electrical Characteristics (Continue)			t°	SYMBOL	MIN	TYP	MAX	UNITS
Thermal Regulation		(30 msec Pulse)	**25**		**--**	**0.004**	**0.02**	**%/W**
Ripple Rejection	**SVR1085 -_**	(ΔV=3V, C_{ADJ}=25µF)	*		**60**	**75**	**--**	**dB**
(f =120Hz, C_{OUT} =25µF,	**SVR1085 -3.3**	(V_{IN} =6.3V, I_{OUT} =3A)	*		**60**	**72**	**--**	**dB**
I_{OUT} = $I_{FULLOAD}$)	**SVR1085 -3.6**	(V_{IN} =6.6V, I_{OUT} =3A)	*		**60**	**72**	**--**	**dB**
	SVR1085 -5	(V_{IN} = 8V)	*		**60**	**68**	**--**	**dB**
	SVR1085 -12	(V_{IN} = 15V)	*		**54**	**60**	**--**	**dB**
Adjust Pin Current	**SVR1085 -_**		**25**	**I_{ADJ}**	**--**	**55**	**--**	**µA**
			*		**--**	**--**	**120**	**µA**
Adjust Pin Current Change	**SVR1085 -_**	10mA$\le I_{OUT} \le I_{FULLOAD}$, 1.5V $\le \Delta V \le$ 25V	*	**ΔI_{ADJ}**	**--**	**0.2**	**5.0**	**µA**
Temperature Stability			*	**$\frac{\Delta V_{OUT}}{\Delta T}$**	**--**	**0.5**	**--**	**%**
Long Term Strability			**125**	**$\frac{\Delta V_{OUT}}{\Delta Vtime}$**	**--**	**0.3**	**1.0**	**%**
RMS Output Noice		(10Hz $\le$ f $\le$ 10kHz)	**25**	**e_n**	**--**	**0.003**	**--**	**%**
Thermal Resistance	**Control Circuitry**			**$R_{\theta JC}$**	**--**	**--**	**0.9**	**°C/W**
Junction to Case	**Power Transistor**				**--**	**--**	**3.0**	**°C/W**

NOTES:

* Full Temperature Range

1/ For Ordering Information, Price, and Availability Contact Factory.

PIN ASSIGNMENT			
FUNCTION	**PIN 1**	**PIN 2**	**PIN 3**
Voltage Regulator	Adjust	Input	Output

2/ Screening per MIL-PRF-19500.

3/ For Lead Bend Options Request Document # DSB-001 (Available for Download @ ssdi-power.com).

4/ For Package Outlines Request Document # DSA-001. (Available for Download @ ssdi-power.com)

5/ Devices are guaranteed to withstand transient Input Voltage up to 30V. For Input Voltages greater then the maximum operating Input Voltage some degradation of specifications will occur. For 5V and 12V devices operating at Input/Output differentials greater then 15V, a minimum external load of 5mA is required to maintain regulation.

6/ See Thermal Regulation specifications for changes in Output Voltage due to the heating effects. Line and Load Regulations are measured at a constant Junction Temperature by low duty cycle pulse testing. Load Regulation is measured at the Output Lead at approx. 1/8" from the package.

7/ Line and Load Regulation are guaranteed up to the maximum power dissipation of 30W. Power Dissipation is determined by the Input/Output differential and the Output Current. Guaranteed maximum power dissipation will not be available over the full Input/Output range.

8/ Dropout Voltage is specified over the full Output Current range of the Device.

9/ Minimum Load Current is defined as the minimum current required to maintain regulation. At 25V Input/Output differential the device is guaranteed to regulate if the Output Current is greater than 10mA.

SVR1085-3.3M, Z, D2, & D3
thru
SVR1085-12M, Z, D2, & D3

PRELIMINARY

SOLID STATE DEVICES, INC.
14830 Valley View Blvd * La Mirada, Ca 90638
Phone: (562) 404-7855 * Fax: (562) 404-1773

TO-254 (M):

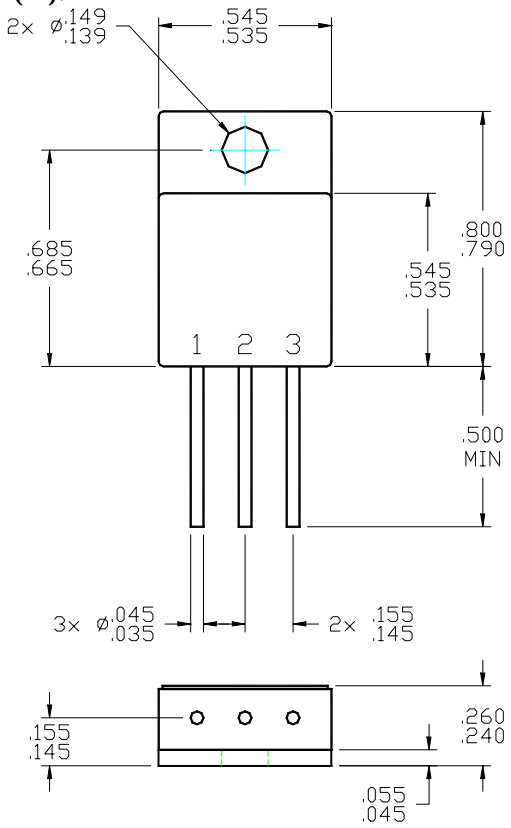

D³ Pack (D3):

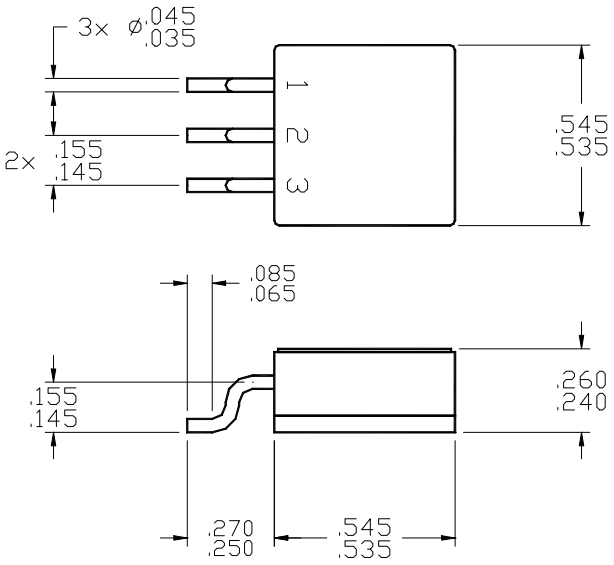

TO-254 (Z):

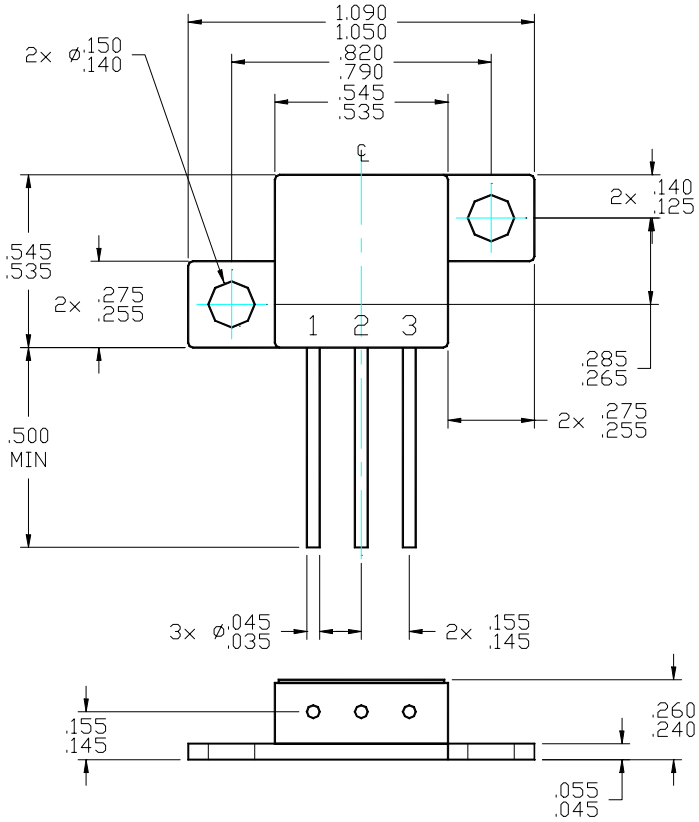

D² Pack (D2):

