KEMET Part Number: SU10VD-10050

(UALSU10VD10050)

KEMET, SU-10VD, AC Line Filters, Common Mode, 50 uH

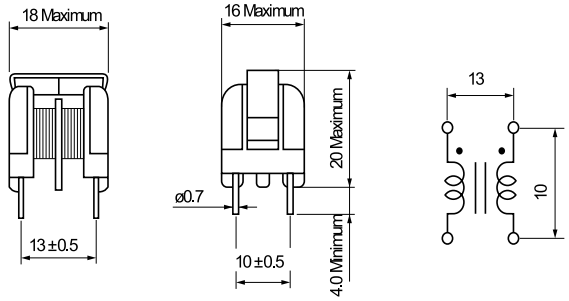

General Information	
Series:	SU-10VD
Style:	Through-Hole
RoHS:	Yes
Miscellaneous:	Temperature Rise Maximum: 45 K

Specifications	
Voltage AC:	250 VAC
Inductance:	50 uH
Current:	1 A
Temperature Range:	-25/+120°C
DC Resistance:	200 mOhms

Dimensions	
L	18mm MAX
T	16mm MAX
H	20mm MAX
LL	4mm MIN
S	13mm +/-0.5mm

Packaging Specifications	
Packaging:	Tray
Packaging Quantity:	700
Weight:	5.5 g

Statements of suitability for certain applications are based on our knowledge of typical operating conditions for such applications, but are not intended to constitute - and we specifically disclaim - any warranty concerning suitability for a specific customer application or use. This Information is intended for use only by customers who have the requisite experience and capability to determine the correct products for their application. Any technical advice inferred from this Information or otherwise provided by us with reference to the use of our products is given gratis, and we assume no obligation or liability for the advice given or results obtained.

© 2006 - 2019 KEMET