Technical Data Sheet

SEOUL SEMICONDUCTOR

SPECIFICATION
[STWRI140E]

Rev. 00

September, 2012

www.acrich.com

PRELIMINARY

Document No. : QP-7-07-18 (Rev.00) 공통_을

Technical Data Sheet

SEOUL SEMICONDUCTOR

Contents

1. Description ---------- 3
2. Absolute Maximum Ratings ---------- 4
3. Electro-Optical Characteristics ---------- 4
4. Characteristic Graph ---------- 5
5. Reliability Test ---------- 7
6. Color & Binning ---------- 8
7. Outline Dimension ---------- 11
8. Packing ---------- 12
9. Soldering ---------- 14
10. Precaution for use ---------- 15

Rev. 00
September, 2012
www.acrich.com

PRELIMINARY

Document No. : QP-7-07-18 (Rev.00) 공통_을

Technical Data Sheet

SEOUL SEMICONDUCTOR

STWRI140E

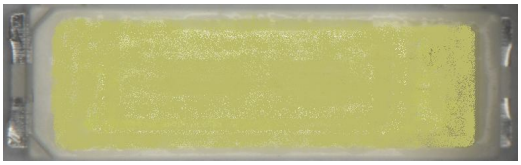

1. Description

This surface-mount LED comes in standard package dimension. It has a substrate made up of a molded plastic reflector sitting on top of a bent lead frame. The die is attached within the reflector cavity and the cavity is encapsulated by silicone.

The package design coupled with careful selection of component materials allow these products to perform with high reliability.

Features

- 7.0mm x 2.0mm x 0.8mm
- White colored SMT package
- Suitable for all SMT assembly and soldering methods
- Pb-Free Reflow soldering application
- RoHS compliant

Applications

- White Back-light unit
- Electric Signs and Signals
- Interior automotive
- Office Automation, Electrical Appliances, Industrial Equipment

Rev. 00
September, 2012
www.acrich.com

PRELIMINARY

Document No. : QP-7-07-18 (Rev.00) 공통_을

2. Absolute Maximum Ratings*1

(T_a=25 °C)

Parameter	Symbol	Value	Unit
Power Dissipation	P_d	684	mW
DC Forward Current	I_F	180	mA
Peak Forward Current	I_{FM} *2	500	mA
Operating Temperature	T_{opr}	-30 ~ +85	°C
Storage Temperature	T_{stg}	-40 ~ +100	°C
ESD Sensitivity	-	5kV	HBM

*1 Care is to be taken that power dissipation does not exceed the absolute maximum rating of the product.
*2 1/10 Duty Cycle @ 1kHz

3. Electro-optical Characteristics

(T_a=25 °C)

Parameter	Symbol	Condition	Min.	Typ.	Max.	Unit
Forward Voltage*1	V_F	I_F =120mA	2.8	3.3	3.6	V
Luminous Intensity*2	I_V	I_F =120mA	-	11	-	cd
Luminous Flux	Φ	I_F =120mA	-	33.5	-	lm
CIE x	-	I_F =120mA	-	0.260	-	-
CIE y	-	I_F =120mA	-	0.240	-	-

*1 Forward voltage measurement allowance is ±0.1V
*2 The luminous intensity IV was measured at the peak of the spatial pattern which may not be aligned with the mechanical axis of the LED package. Luminous intensity measurement allowance is ±7%

[Note] All measurements were made under the standardized environment of SSC.

4. Electro-optical characteristics graph

Forward Current vs. Forward Voltage

(T_a=25 ºC)

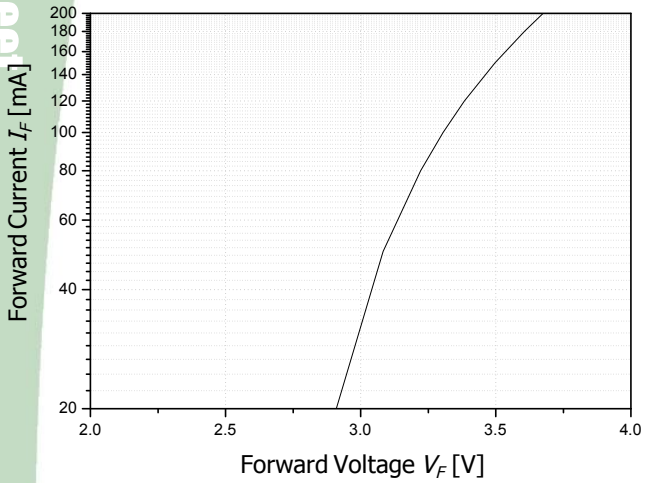

Relative Luminous Intensity vs. Forward Current

(T_a=25 ºC)

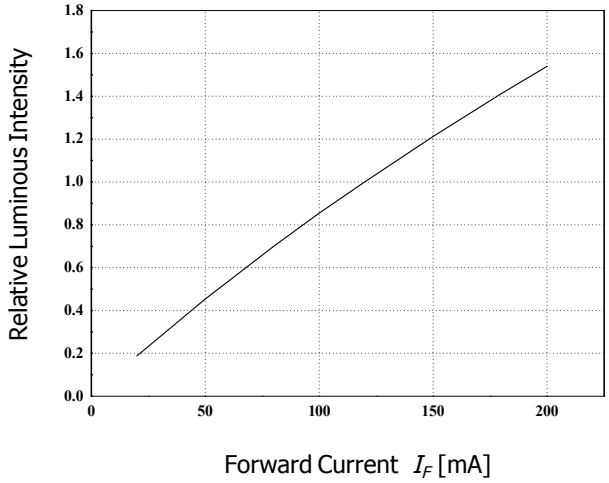

Spectrum

(T_a=25 ºC)

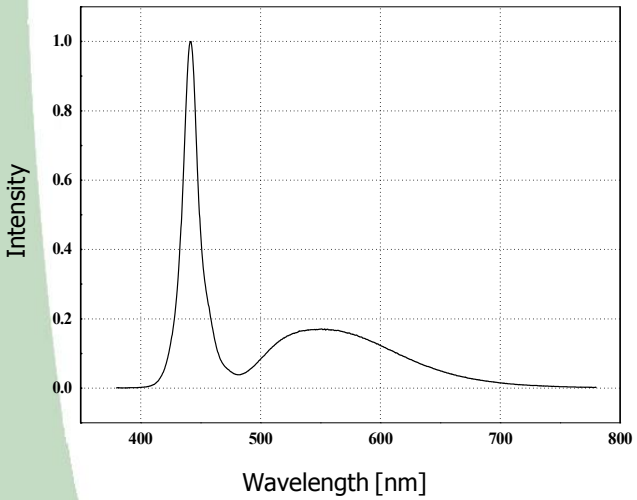

Radiation Diagram

(T_a=25 ºC)

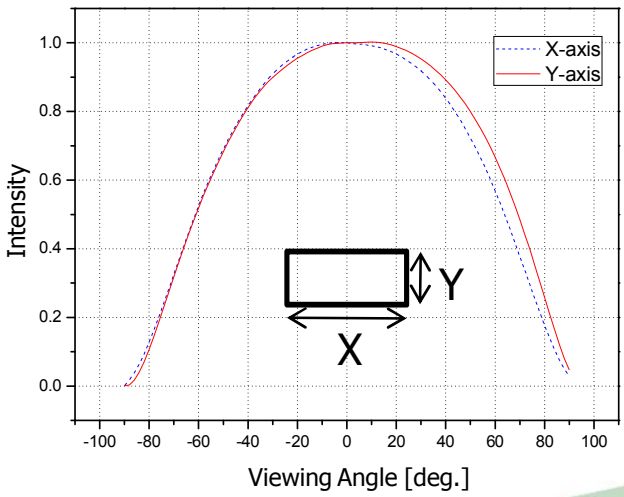

Forward Current vs. Temperature

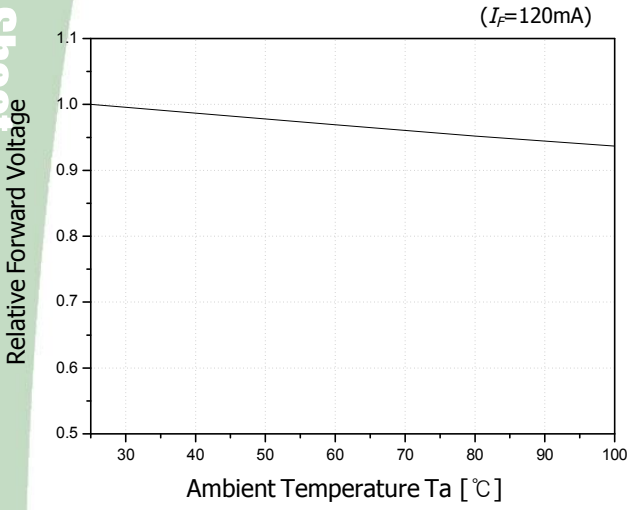

Relative Luminous Intensity vs. Temperature

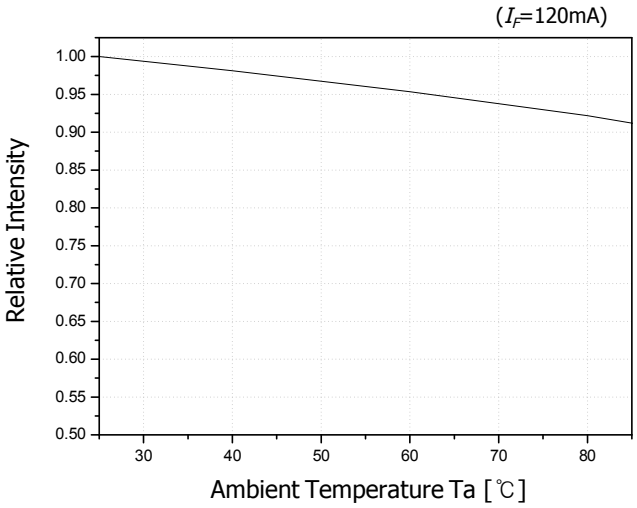

Chromaticity vs. Ambient Temperature

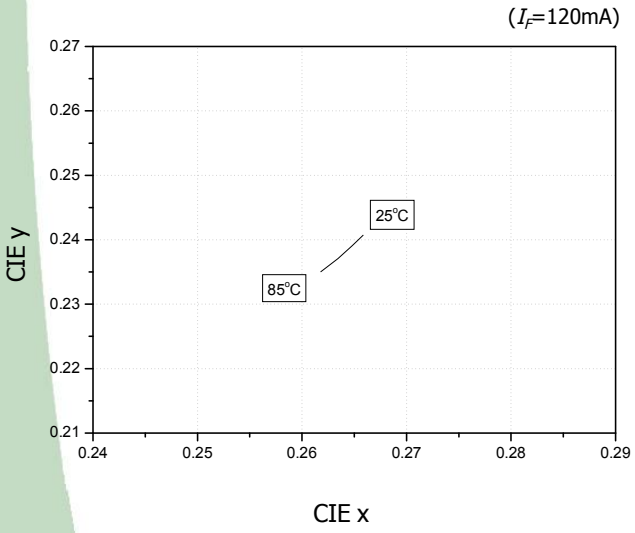

Chromaticity vs. Forward Current

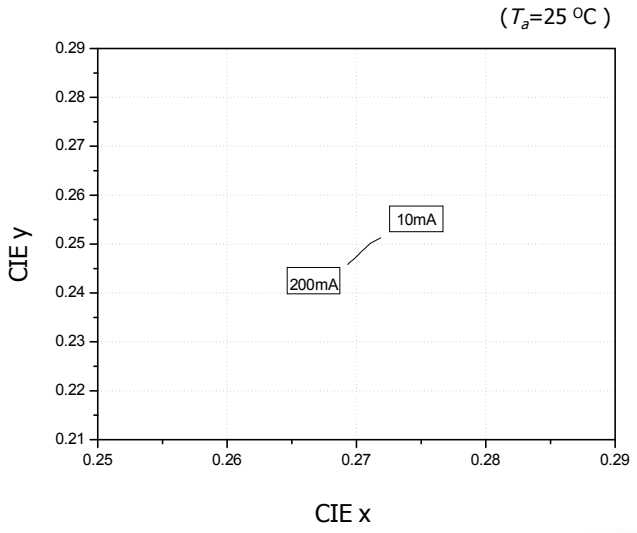

5. Reliability Test Items and Conditions

Item	Reference	Test Condition	Duration / Cycle	Number of Damage
Thermal Shock	Internal Reference	T_a =-40°C (30MIN) ~ 100°C (30MIN)	100 Cycle	0/22
Temperature Cycle	EIAJ ED-4701	T_a =-40°C (30MIN) ~ 25°C (5MIN) ~ 100°C (30MIN) ~ 25°C (5MIN)	100 Cycle	0/22
Operating Endurance Test	Internal Reference	T_a =25°C, I_F =120mA	1,000 Hours	0/22
High Temperature / Humidity Life	Internal Reference	T_a =60°C, RH=90%, I_F =120mA	1,000 Hours	0/22
High Temperature Life Test	Internal Reference	T_a =60°C, I_F =120mA	1,000 Hours	0/22

* Criteria for Judging the Damage

Item	Symbol	Condition	Criteria for Judgement	
			MIN	MAX
Forward Voltage	V_F	I_F =120mA	-	USL*1 × 1.1
Luminous Intensity	I_V	I_F =120mA	LSL*2 × 0.7	-

[Note] *1 USL : Upper Specification Level *2 LSL : Lower Specification Level

6. Color & Binning

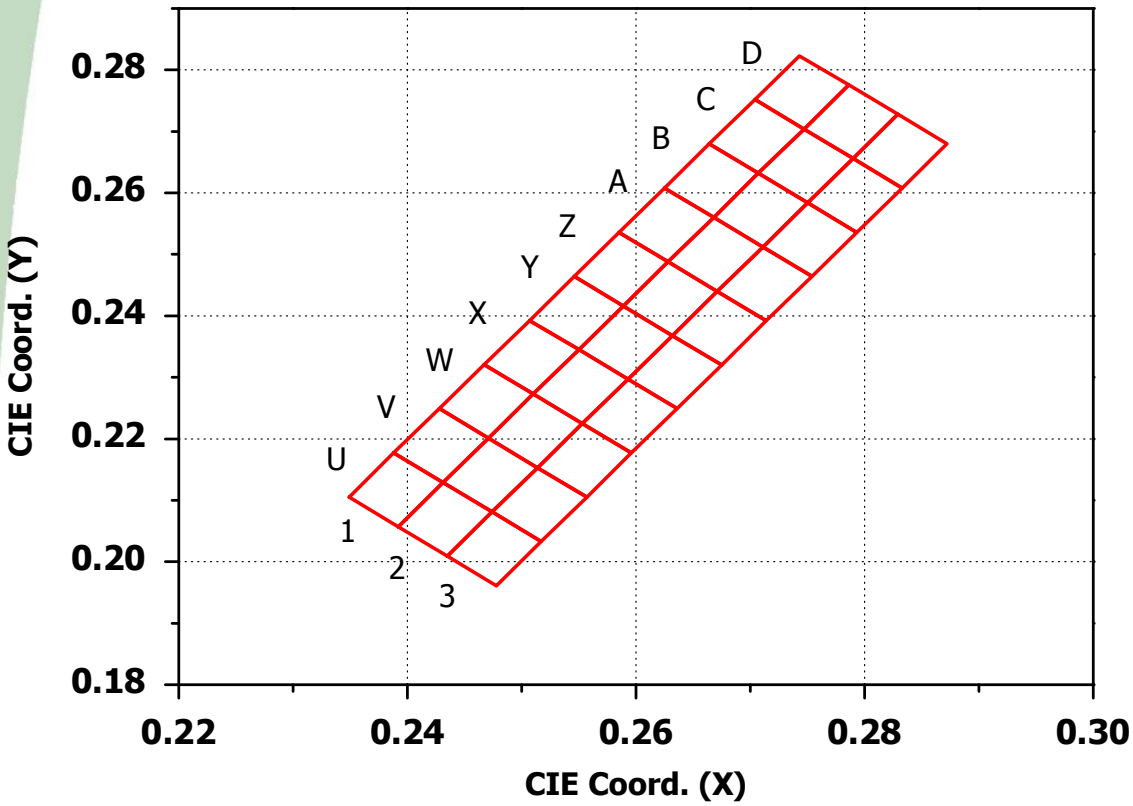

● COLOR RANK

CIE(x)	x1	y1	x2	y2	CIE(x)	x1	y1	x2	y2
CIE(y)	x3	y3	x4	y4	CIE(y)	x3	y3	x4	y4
U1	0.235	0.211	0.239	0.218	Z1	0.255	0.246	0.259	0.254
	0.243	0.213	0.239	0.206		0.263	0.249	0.259	0.242
U2	0.239	0.206	0.243	0.213	Z2	0.259	0.242	0.263	0.249
	0.247	0.208	0.244	0.201		0.267	0.244	0.263	0.237
U3	0.244	0.201	0.247	0.208	Z3	0.263	0.237	0.267	0.244
	0.252	0.203	0.248	0.196		0.271	0.239	0.268	0.232
V1	0.239	0.218	0.243	0.225	A1	0.259	0.254	0.263	0.261
	0.247	0.220	0.243	0.213		0.267	0.256	0.263	0.249
V2	0.243	0.213	0.247	0.220	A2	0.263	0.249	0.267	0.256
	0.251	0.215	0.247	0.208		0.271	0.251	0.267	0.244
V3	0.247	0.208	0.251	0.215	A3	0.267	0.244	0.271	0.251
	0.256	0.211	0.252	0.203		0.275	0.246	0.271	0.239
W1	0.243	0.225	0.247	0.232	B1	0.263	0.261	0.266	0.268
	0.251	0.227	0.247	0.220		0.271	0.263	0.267	0.256
W2	0.247	0.220	0.251	0.227	B2	0.267	0.256	0.271	0.263
	0.255	0.223	0.251	0.215		0.275	0.258	0.271	0.251
W3	0.251	0.215	0.255	0.223	B3	0.271	0.251	0.275	0.258
	0.260	0.218	0.256	0.211		0.279	0.254	0.275	0.246
X1	0.247	0.232	0.251	0.239	C1	0.266	0.268	0.270	0.275
	0.255	0.235	0.251	0.227		0.275	0.270	0.271	0.263
X2	0.251	0.227	0.255	0.235	C2	0.271	0.263	0.275	0.270
	0.259	0.230	0.255	0.223		0.279	0.266	0.275	0.258
X3	0.255	0.223	0.259	0.230	C3	0.275	0.258	0.279	0.266
	0.264	0.225	0.260	0.218		0.283	0.261	0.279	0.254
Y1	0.251	0.239	0.255	0.246	D1	0.270	0.275	0.274	0.282
	0.259	0.242	0.255	0.235		0.279	0.278	0.275	0.270
Y2	0.255	0.235	0.259	0.242	D2	0.275	0.270	0.279	0.278
	0.263	0.237	0.259	0.230		0.283	0.273	0.279	0.266
Y3	0.259	0.230	0.263	0.237	D3	0.279	0.266	0.283	0.273
	0.268	0.232	0.264	0.225		0.287	0.268	0.283	0.261

• Measurement Uncertainty of the Color Coordinates : ± 0.007

PRELIMINARY

● Bin Code Description

Bin Code		
Luminous Intensity	**CIE**	**Forward Voltage**
T5	**Y3**	**Z34**

Luminous Intensity [mcd] @ I_F = 120mA		
Bin Code	**Min.**	**Max.**
S0	9000	9500
S5	9500	10000
T0	10000	10500
T5	10500	11000
U0	11000	11500
U5	11500	12000
V0	12000	12500

Color Rank @ I_F =120mA
XX XX : U2~D3

Forward Voltage [V] @ I_F = 120mA		
Bin Code	**Min.**	**Max.**
Z28	2.8	3.0
Z30	3.0	3.2
Z32	3.2	3.4
Z34	3.4	3.6

☐ **Available ranks**

SEOUL SEMICONDUCTOR

7. Outline Dimension

(Tolerance: ±0.1, Unit: mm)

Package Outlines

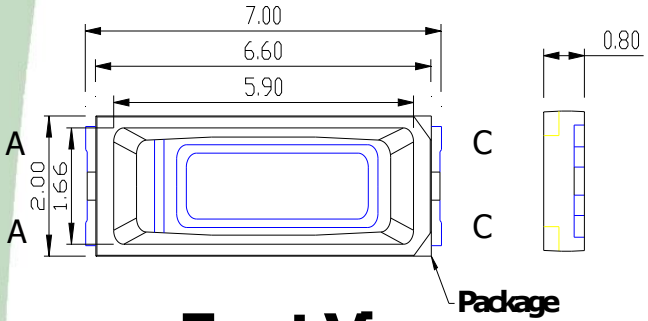

Front View



Side View

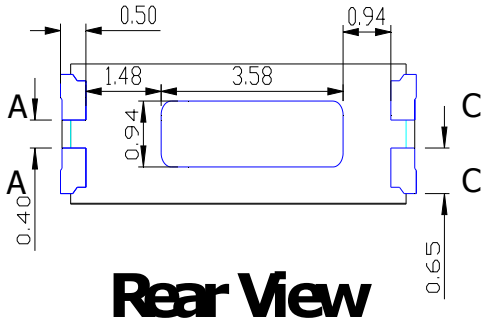

Rear View

Circuit Diagram

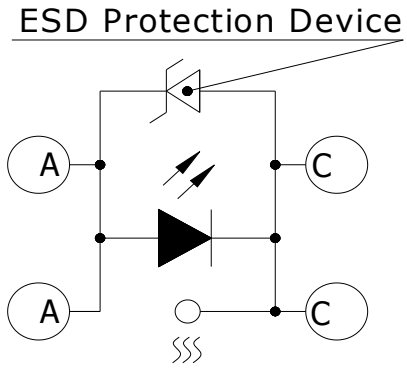

Recommended Solder Pad

Front View

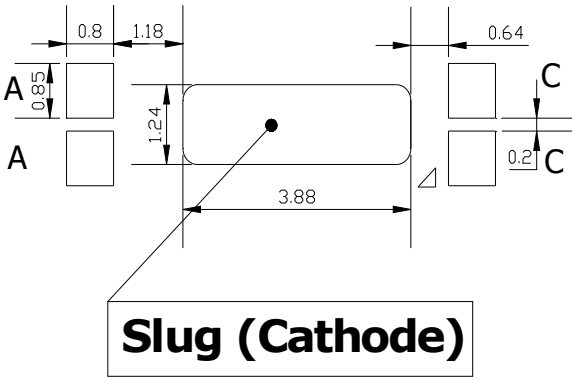

8. Packing

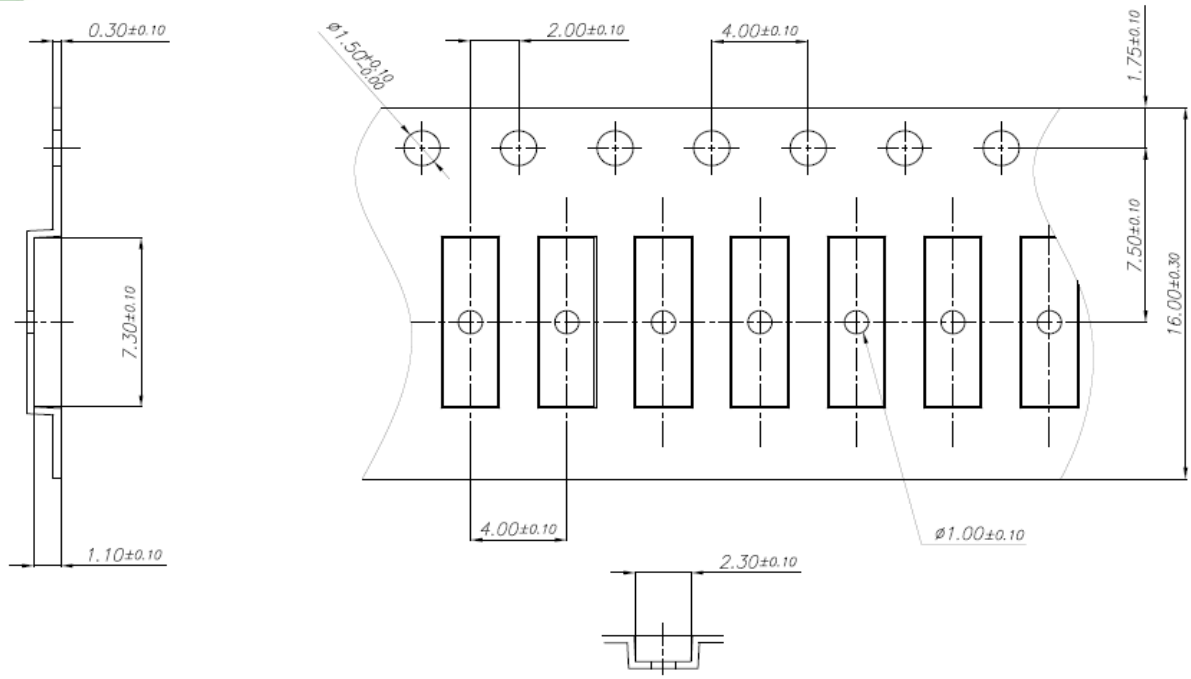

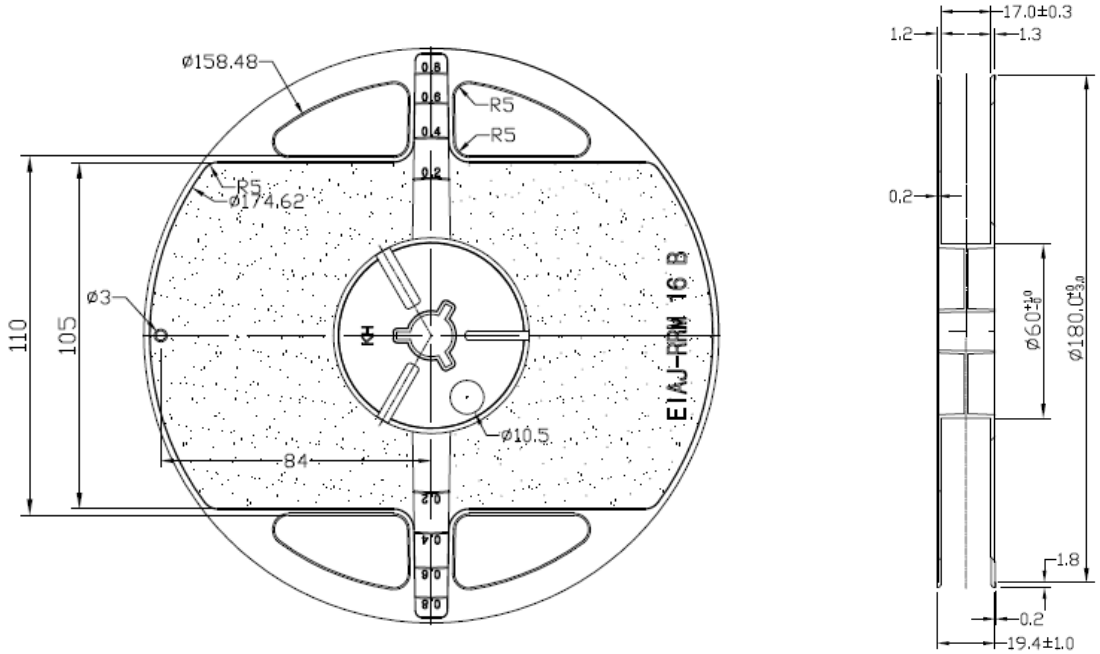

(1) Quantity : 3,500pcs/Reel
(2) Cumulative Tolerance : Cumulative Tolerance/10 pitches to be ±0.2mm
(3) Adhesion Strength of Cover Tape : Adhesion strength to be 0.1-0.7N when the cover tape is turned off from the carrier tape at the angle of 10º to the carrier tape
(4) Package : P/N, Manufacturing data Code No. and quantity to be indicated on a damp proof Package

● Reel Packing Structure

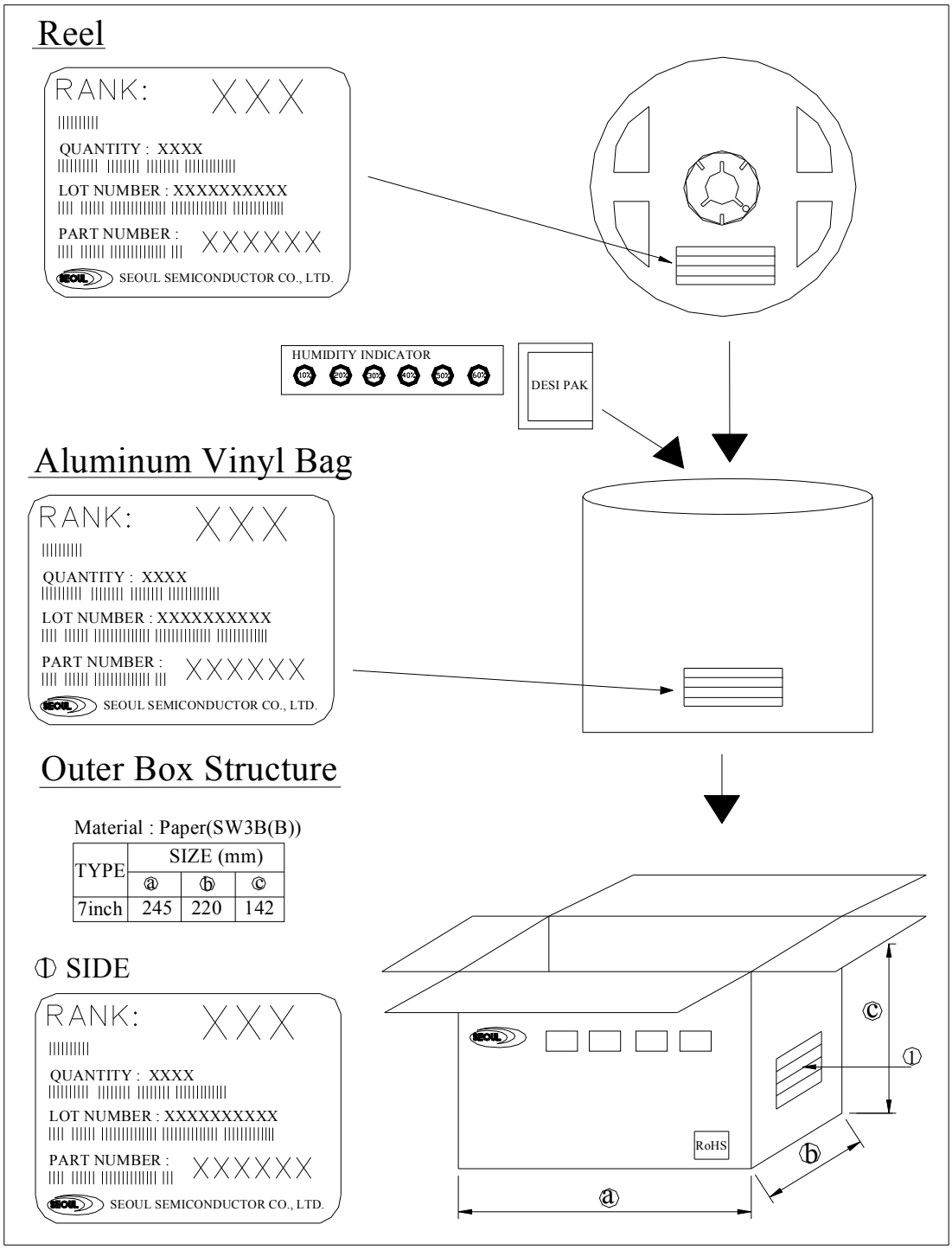

9. Soldering

(1) Lead Solder

Lead Solder	
Pre-heat	120~150℃
Pre-heat time	120 sec. Max.
Peak-Temperature	240℃ Max.
Soldering time Condition	10 sec. Max.

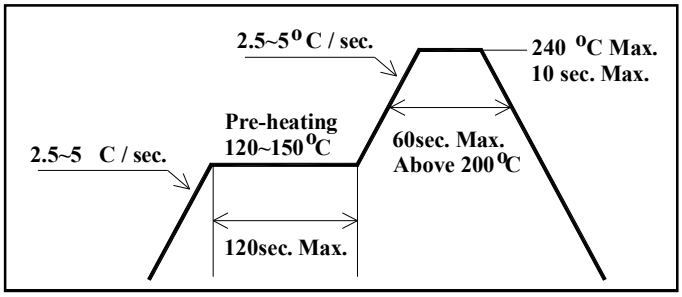

(2) Lead-Free Solder

Lead Free Solder	
Pre-heat	150~200℃
Pre-heat time	120 sec. Max.
Peak-Temperature	260℃ Max.
Soldering time Condition	10 sec. Max.

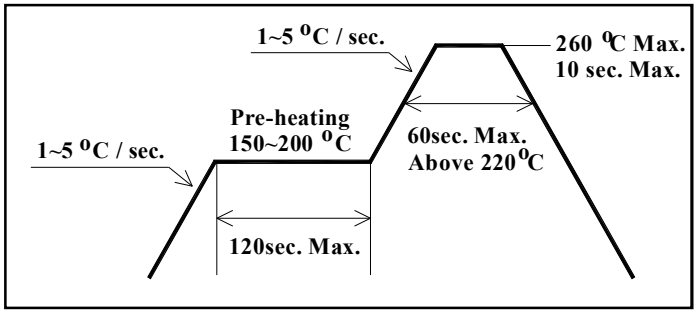

(3) Hand Soldering conditions
Do not exceed 4 seconds at maximum 315°C under soldering iron.

(4) The encapsulated material of the LEDs is silicone.
Precautions should be taken to avoid the strong pressure on the encapsulated part.
So when using the chip mounter, the picking up nozzle that does not affect the silicone resign should be used.

Note : In case that the soldered products are reused in soldering process, we don't guarantee the products.

10. Precaution for use

(1) Storage

In order to avoid the absorption of moisture, it is recommended to store in a dry box (or a desicator) with a desiccant. Otherwise, to store them in the following environment is recommended.
Temperature : 5ºC ~30ºC Humidity : maximum 70%RH

(2) Attention after open.

LED is correspond to SMD, when LED be soldered dip, interfacial separation may affect the light transmission efficiency, causing the light intensity to drop. Attention in followed; Keeping of a fraction
Temperature : 5 ~ 40ºC Humidity : less than 10%

(3) In the case of more than 1 week passed after opening or change color of indicator on desiccant, components shall be dried 10-12hr. at 60±5ºC.

(4) Any mechanical force or any excess vibration shall not be accepted to apply during cooling process to normal temperature after soldering.

(5) Quick cooling shall be avoided.

(6) Components shall not be mounted on warped direction of PCB.

(7) Anti radioactive ray design is not considered for the products.

(8) This device should not be used in any type of fluid such as water, oil, organic solvent etc.
When washing is required, IPA should be used.

(9) When the LEDs are illuminating, operating current should be decided after considering the ambient maximum temperature.

(10) The LEDs must be soldered within seven days after opening the moisture-proof packing.

(11) Repack unused products with anti-moisture packing, fold to close any opening and then store in a dry place.