STV7610A

PLASMA DISPLAY PANEL DATA DRIVER

FEATURE

- 96 OUTPUTS PLASMA DISPLAY DRIVER
- 100 V ABSOLUTE MAXIMUM SUPPLY
- 5 V SUPPLY FOR LOGIC
- 60/50 mA SOURCE/SINK OUTPUT MOS
- 60/50 mA SOURCE/SINK OUTPUT DIODE
- 6 bit CASCADABLE DATA BUS (20 MHz)
- BLANK, POLARITY CONTROL
- BCD TECHNOLOGY
- PACKAGING TQFP144 OR DICE

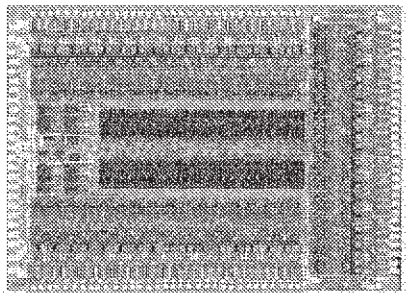

DIE
ORDER CODE: STV7610A/WAF(1)
(1): Unsawn tested wafer

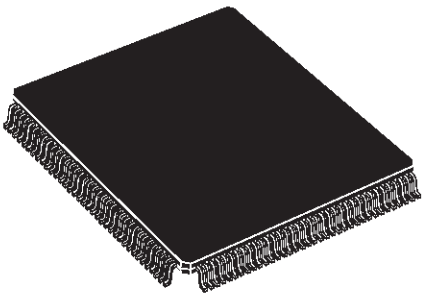

TQFP144 (20 x 20 x 1.4 mm)
(Thin Plastic Quad Flat Pack)

ORDER CODE: STV7610A

DESCRIPTION

The STV7610A is a BCD data driver for Plasma Display Panel (PDP). Using a 6-bit wide cascadable data bus, it addresses 96 high current & high voltage outputs. By serially connecting several STV7610A, any horizontal pixel definition can be performed. The 20 MHz shift clock gives an equivalent 120 MHz shift register. The STV7610A is supplied with a separated 90 V power output supply and a 5 V logic supply. All command inputs are CMOS compatible.

Version 4.2

This is preliminary information on a new product in development or undergoing evaluation. Details are subject to change without notice.

PIN CONNECTIONS 3
PIN CONNECTIONS 4
PIN LIST 5
PAD COORDINATES (IN MM) 6
BLOCK DIAGRAM 9
CIRCUIT DESCRIPTION 10
NOTE 1 ABSOLUTE MAXIMUM RATINGS 11
NOTE 4 THERMAL DATA 11
NOTE 4 ELECTRICAL CHARACTERISTICS 12
NOTE 5 AC TIMINGS REQUIREMENTS 13
NOTE 5 AC TIMINGS CHARACTERISTICS 13
FIGURE 2. INPUT/OUTPUT SCHEMATICS 15
FIGURE 6. PACKAGE MECHANICAL DATA 16

PIN CONNECTIONS

(DIE Pinout)

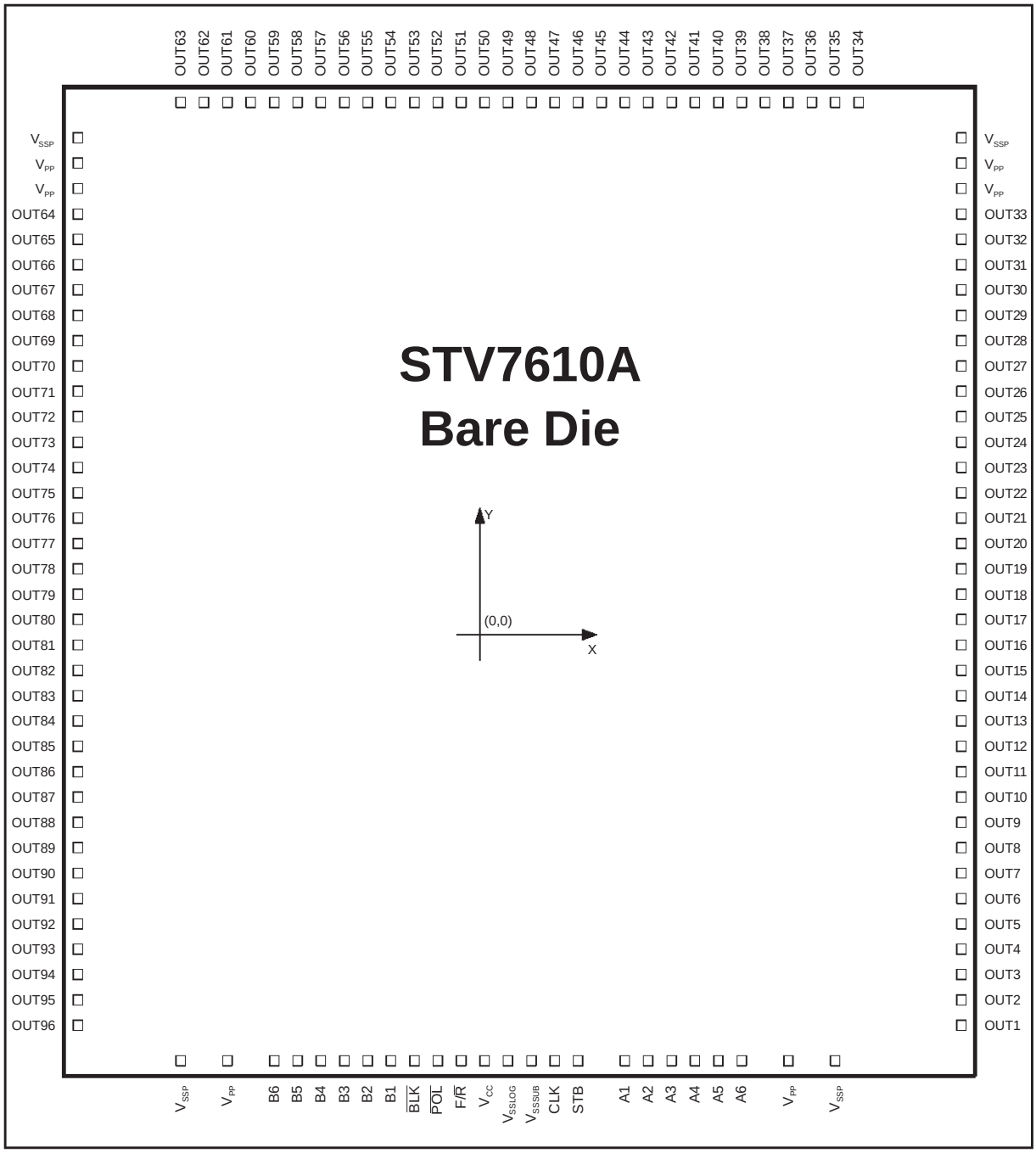

PIN CONNECTIONS

(TQFP Pinout)

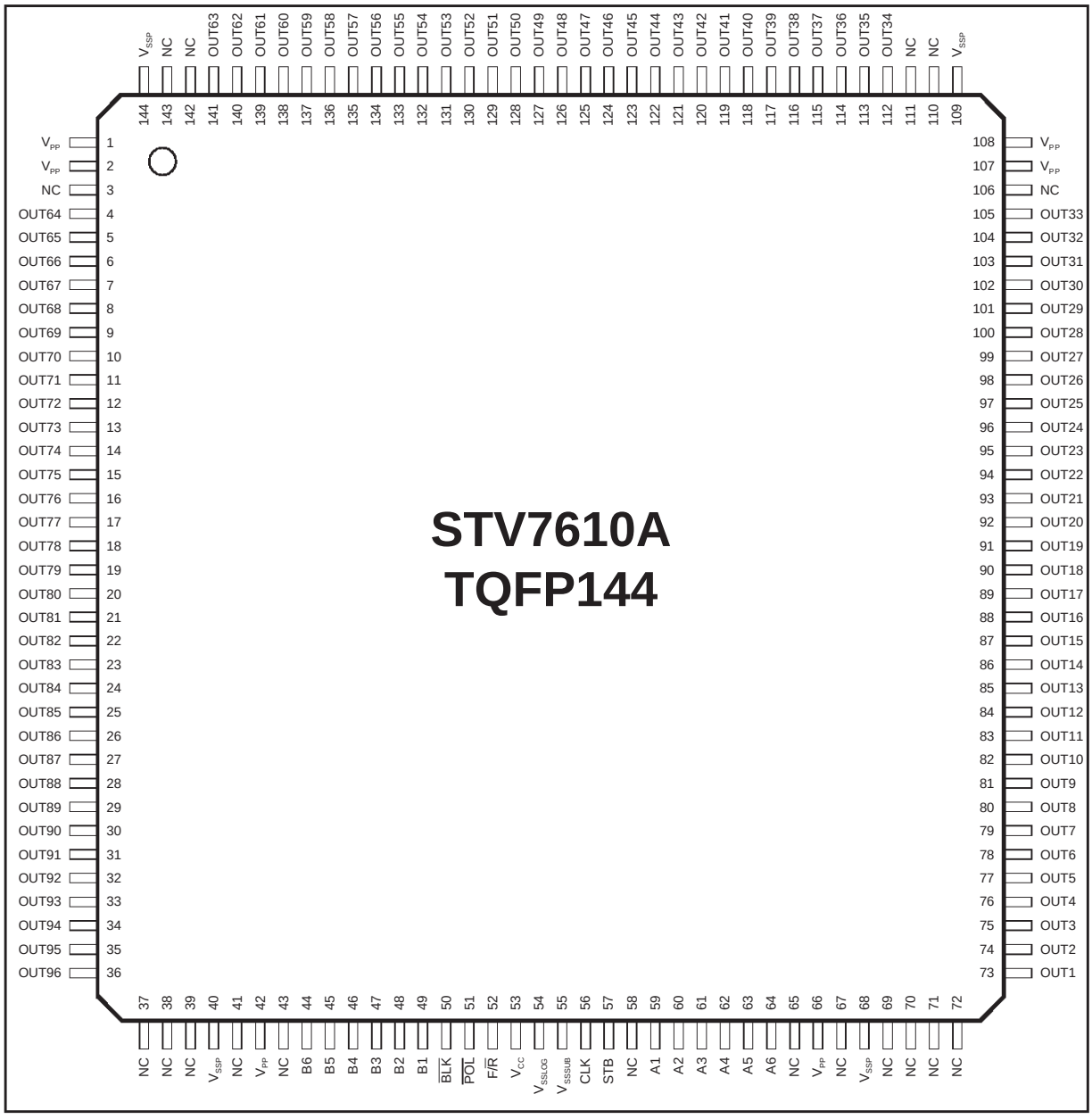

PIN LIST

(TQFP144)

Pin N°	Symbol	Type	Description
3-37-38-39-41-43-48-65-67-69-70-71-72-106-110-111-142-143	-	NC	
1-2-42-66-107-108	V_{PP}	Supply	High Voltage Supply of Power Outputs
53	V_{CC}	Ground	5V Logic Supply
40-68-109-144	V_{SSP}	Ground	Ground of Power Outputs
54	V_{SSLOG}	Ground	Logic Ground
55	V_{SSSUB}	Output	Substrate Ground
73 to 105	OUT 1 to OUT 33	Output	Power Output
112 to 141	OUT 34 to OUT 63	Input	Power Output
4 to 36	OUT 64 to OUT 96	Input	Power Output
50	$\overline{BLK}$	Input	Blanking Input
51	$\overline{POL}$	Input	Polarity Input
52	FOR/$\overline{REV}$	Input	Selection of Shift Direction
56	CLK	Input	Clock of data Shift Register
57	STB	Input	Latch of data to Outputs
59 to 64	A1 to A6	Input/Output	Forward Shift Register Input
44 to 49	B6 to B1	Input/Output	Forward Shift Register Output

PIN LIST (Power outputs)

Output N°	Pin N°	Output N°	Pin N°	Output N°	Pin N°	Output N°	Pin N°
1	73	25	97	49	127	73	13
2	74	26	98	50	128	74	14
3	75	27	99	51	129	75	15
4	76	28	100	52	130	76	16
5	77	29	101	53	131	77	17
6	78	30	102	54	132	78	18
7	79	31	103	55	133	79	19
8	80	32	104	56	134	80	20
9	81	33	105	57	135	81	21
10	82	34	112	58	136	82	22
11	83	35	113	59	137	83	23
12	84	36	114	60	138	84	24
13	85	37	115	61	139	85	25
14	86	38	116	62	140	86	26
15	87	39	117	63	141	87	27

Output N°	Pin N°
16	88
17	89
18	90
19	91
20	92
21	93
22	94
23	95
24	96

Output N°	Pin N°
40	118
41	119
42	120
43	121
44	122
45	123
46	124
47	125
48	126

Output N°	Pin N°
64	4
65	5
66	6
67	7
68	8
69	9
70	10
71	11
72	12

Output N°	Pin N°
88	28
89	29
90	30
91	31
92	32
93	33
94	34
95	35
96	36

PAD COORDINATES (in MM)

Pad positions from the middle of the top side

Name	Center		Size	
	X	Y	X	Y
OUT 48	74.0	3034.0	80.0	90.0
OUT 47	210.0	3034.0	80.0	90.0
OUT 46	346.0	3034.0	80.0	90.0
OUT 45	482.0	3034.0	80.0	90.0
OUT 44	618.0	3034.0	80.0	90.0
OUT 43	754.0	3034.0	80.0	90.0
OUT 42	890.0	3034.0	80.0	90.0
OUT 41	1026.0	3034.0	80.0	90.0
OUT 40	1162.0	3034.0	80.0	90.0
OUT 39	1298.0	3034.0	80.0	90.0
OUT 38	1434.0	3034.0	80.0	90.0
OUT 37	1570.0	3034.0	80.0	90.0
OUT 36	1706.0	3034.0	80.0	90.0
OUT 35	1842.0	3034.0	80.0	90.0
OUT 34	1993.0	3034.0	80.0	90.0

Pad positions along the right side

Name	Center		Size	
	X	Y	X	Y
V_{SSP}	2116.0	2795.0	90.0	80.0
V_{PP}	2029.8	2496.5	90.0	90.0
V_{PP}	2041.5	1843.0	90.0	80.0

Name	Center		Size	
	X	Y	X	Y
OUT 33	2117.0	1580.0	90.0	80.0
OUT 32	2117.0	1444.0	90.0	80.0
OUT 31	2117.0	1308.0	90.0	80.0
OUT 30	2117.0	1172.0	90.0	80.0
OUT 29	2117.0	1036.0	90.0	80.0
OUT 28	2117.0	900.0	90.0	80.0
OUT 27	2117.0	764.0	90.0	80.0
OUT 26	2117.0	628.0	90.0	80.0
OUT 25	2117.0	492.0	90.0	80.0
OUT 24	2117.0	356.0	90.0	80.0
OUT 23	2117.0	220.0	90.0	80.0
OUT 22	2117.0	84.0	90.0	80.0
OUT 21	2117.0	2117.0	90.0	80.0
OUT 20	2117.0	2117.0	90.0	80.0
OUT 19	2117.0	-324.0	90.0	80.0
OUT 18	2117.0	-460.0	90.0	80.0
OUT 17	2117.0	-596.0	90.0	80.0
OUT 16	2117.0	-732.0	90.0	80.0
OUT 15	2117.0	-868.0	90.0	80.0
OUT 14	2117.0	-1004.0	90.0	80.0
OUT 13	2117.0	-1140.0	90.0	80.0
OUT 12	2117.0	-1276.0	90.0	80.0
OUT 11	2117.0	-1412.0	90.0	80.0

Name	Center		Size	
	X	Y	X	Y
OUT 10	2117.0	-1548.0	90.0	80.0
OUT 9	2117.0	-1684.0	90.0	80.0
OUT 8	2117.0	-1820.0	90.0	80.0
OUT 7	2117.0	-1956.0	90.0	80.0
OUT 6	2117.0	-2092.0	90.0	80.0
OUT 5	2117.0	-2228.0	90.0	80.0
OUT 4	2117.0	-2364.0	90.0	80.0
OUT 3	2117.0	-2500.0	90.0	80.0
OUT 2	2117.0	-2636.0	90.0	80.0
OUT 1	2117.0	-2832.0	90.0	80.0

Pad positions along the bottom side

Name	Center		Size	
	X	Y	X	Y
V_{SSP}	1904.0	-3034.0	80.0	90.0
V_{PP}	1698.0	-3034.0	80.0	90.0
A6	1499.0	-3034.0	80.0	90.0
A5	1349.0	-3034.0	80.0	90.0
A4	1199.0	-3034.0	80.0	90.0
A3	1049.0	-3034.0	80.0	90.0
A2	899.0	-3034.0	80.0	90.0
A1	749.0	-3034.0	80.0	90.0
STB	449.0	-3034.0	80.0	90.0
CLK	299.0	-3034.0	80.0	90.0
GNDsub	156.5	-3034.0	80.0	90.0
GND	3.0	-3034.0	80.0	90.0
V_{CC}	-158.0	-3034.0	80.0	90.0
F/R	-299.0	-3034.0	80.0	90.0
POL	-449.0	-3034.0	80.0	90.0
BLK	-599.0	-3034.0	80.0	90.0
B1	-749.0	-3034.0	80.0	90.0
B2	-899.0	-3034.0	80.0	90.0
B3	-1049.0	-3034.0	80.0	90.0
B4	-1199.0	-3034.0	80.0	90.0
B5	-1349.0	-3034.0	80.0	90.0
B6	-1499.0	-3034.0	80.0	90.0
V_{PP}	-1698.0	-3034.0	80.0	90.0
V_{SSP}	-1904.0	-3034.0	80.0	90.0

Pad Positions along the left side

Name	Center		Size	
	X	Y	X	Y
OUT 96	-2117.0	-2832.0	90.0	80.0
OUT 95	-2117.0	-2636.0	90.0	80.0
OUT 94	-2117.0	-2500.0	90.0	80.0
OUT 93	-2117.0	-2364.0	90.0	80.0
OUT 92	-2117.0	-2228.0	90.0	80.0
OUT 91	-2117.0	-2092.0	90.0	80.0
OUT 90	-2117.0	-1956.0	90.0	80.0
OUT 89	-2117.0	-1820.0	90.0	80.0
OUT 88	-2117.0	-1684.0	90.0	80.0
OUT 87	-2117.0	-1548.0	90.0	80.0
OUT 86	-2117.0	-1412.0	90.0	80.0
OUT 85	-2117.0	-1276.0	90.0	80.0
OUT 84	-2117.0	-1140.0	90.0	80.0
OUT 83	-2117.0	-1004.0	90.0	80.0
OUT 82	-2117.0	-868.0	90.0	80.0
OUT 81	-2117.0	-732.0	90.0	80.0
OUT 80	-2117.0	-596.0	90.0	80.0
OUT 79	-2117.0	-460.0	90.0	80.0
OUT 78	-2117.0	-324.0	90.0	80.0
OUT 77	-2117.0	-188.0	90.0	80.0
OUT 76	-2117.0	-52.0	90.0	80.0
OUT 75	-2117.0	84.0	90.0	80.0
OUT 74	-2117.0	220.0	90.0	80.0
OUT 73	-2117.0	356.0	90.0	80.0
OUT 72	-2117.0	492.0	90.0	80.0
OUT 71	-2117.0	628.0	90.0	80.0
OUT 70	-2117.0	764.0	90.0	80.0
OUT 69	-2117.0	900.0	90.0	80.0
OUT 68	-2117.0	1036.0	90.0	80.0
OUT 67	-2117.0	1172.0	90.0	80.0
OUT 66	-2117.0	1308.0	90.0	80.0
OUT 65	-2117.0	1444.0	90.0	80.0
OUT 64	-2117.0	1580.0	90.0	80.0
V_{PP}	-2041.5	1843.0	90.0	80.0
V_{PP}	-2029.8	2496.5	90.0	80.0
V_{SSP}	2116.0	2795.5	90.0	80.0

Pad Positions along the top side

Name	Center		Size	
	X	Y	X	Y
OUT 63	-1980.0	3034.0	80.0	90.0
OUT 62	-1830.0	3034.0	80.0	90.0
OUT 61	-1694.0	3034.0	80.0	90.0
OUT 60	-1558.0	3034.0	80.0	90.0
OUT 59	-1422.0	3034.0	80.0	90.0
OUT 58	-1286.0	3034.0	80.0	90.0
OUT 57	-1150.0	3034.0	80.0	90.0
OUT 56	-1014.0	3034.0	80.0	90.0
OUT 55	-878.0	3034.0	80.0	90.0
OUT 54	-742.0	3034.0	80.0	90.0
OUT 53	-606.0	3034.0	80.0	90.0
OUT 52	-470.0	3034.0	80.0	90.0
OUT 51	-334.0	3034.0	80.0	90.0
OUT 50	-198.0	3034.0	80.0	90.0
OUT 49	-62.0	3034.0	80.0	90.0

BLOCK DIAGRAM

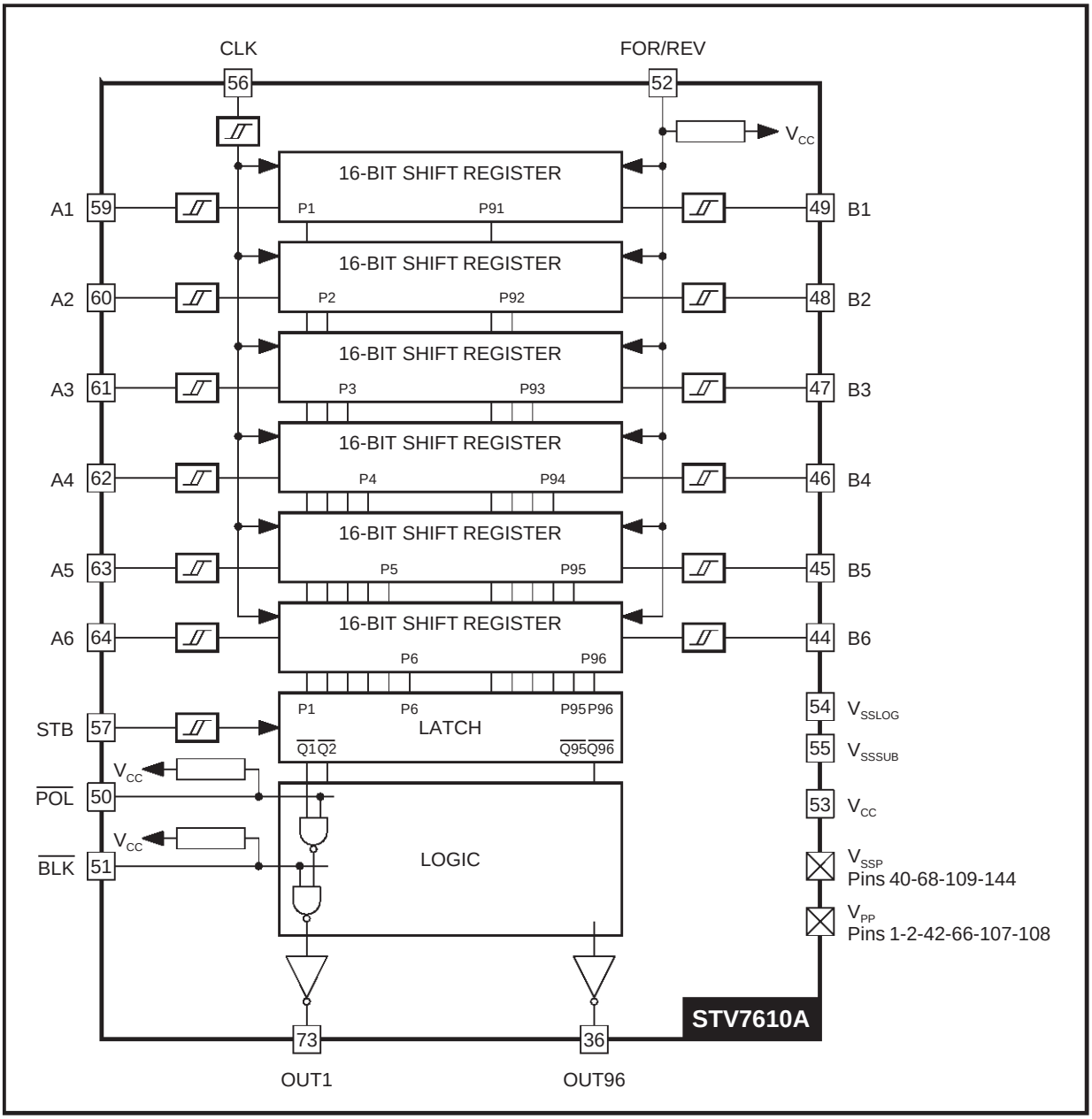

CIRCUIT DESCRIPTION

The STV7610A contains all the logic and the power circuits necessary to drive the columns of a Plasma Display Panel (P. D. P.). The binary value of each pixel of the displayed line is loaded into the shift register. Data are input in a 6-bit wide data bus to A1 - A6 input (case of forward shift mode). Data are shifted at each low to high transition of the CLK shift clock. After 16 shifts the first data are available on B1 - B6 outputs. These B1 - B6 outputs can be used to cascade several drivers to perform any horizontal resolution. The forward/reverse (FOR/$\overline{REV}$) input is used to select the direction of the shift register, A1 - A6 and B1 - B6 data bus input/output status is set according to the selected direction. FOR/$\overline{REV}$ = H, A is an input and B is an output.

Serial inputs, CLK, STB inputs are Smith trigger inputs. If not used in the application, Blanking ($\overline{BLK}$), Polarity ($\overline{POL}$ are internaly pulled to level "H". The maximum frequency of the shift clock is 20 MHz. This leads to an equivalent 120 MHz serial shift register.

On low level of STB, data is transferred from shift register to the latch stage. Data will not be refreshed as long as STB is kept high.

Blanking input ($\overline{BLK}$) forces the power outputs to low level when pulled low. All the power outputs are set at high level when the Polarity command ($\overline{POL}$) is pulled low and the Blanking ($\overline{BLK}$) input is at high level.

V_{SSSUB} and V_{SSLOG} must be connected as close as possible to the logical reference ground of the application.

Shift Register Truth Table

Input		Input/Output		Shift Register Function
FOR/ $\overline{REV}$	CLK	A	B	Output Q
H	Rise	IN	OUT	Forward shift
H	H or L	IN	OUT	Steady
L	Rise	OUT	IN	Reverse shift
L	H or L	OUT	IN	Steady

Power Output Truth Table

Qn	STB	$\overline{BLK}$	$\overline{POL}$	Driver Output	Comments
X	X	L	X	L	Output low
X	X	H	L	H	Output high
X	H	H	H	Qn	Data latched
L	L	H	H	L	Data copied
H	L	H	H	H	Data copied

Note 1 Qn+1 = A1, Qn + 2 = A2, Qn + 3 = A3, Qn + 4 = A4, Qn + 5 = A5, Qn + 6 = A6, n = [0,6,12,18,...,90]

ABSOLUTE MAXIMUM RATINGS

Symbol	Parameter	Value	Unit
V_{CC}	Logic Supply Range (Pin 53)	-0.3, +7	V
OUTi	Output Pins (4 to 36, 73 to 105, 112 to 141)	-0.3, +100	V
V_{IN}	Logic Input Voltage (Pins 50, 51, 52, 56, 57, 59 to 64)	-0.3, $+V_{CC}$ +0.3	V
V_{OUT}	Logic Output Voltage (Pin 44 to 49)	-0.3, $+V_{CC}$ + 0.3	V
I_{POUT}	Driver Output Current (Note 2) (Note 4)	-60/ +50	mA
I_{DOUT}	Diode Output Current (Note 3) (Note 4)	-50/ +60	mA
T_j	Junction Temperature	+150	°C
T_{oper}	Operating Temperature	-20, +85	°C
T_{stg}	Storage Temperature	-50, +150	°C

Note 2 Through one power output (all power outputs).

Note 3 Through one power output for all power outputs (see Test Diagram) with Junction temperature lower or equal than $T_j$max.

Note 4 These parameters are measured during ST's internal qualification which includes temperature characterisation on standard batches and on corners batches of the process. These parameters are not tested on the parts.

THERMAL DATA

Symbol	Parameter		Value	Unit
$R_{th(j-a)}$	Junction-ambient Thermal Resistance	Typ.	41	°C/W

ELECTRICAL CHARACTERISTICS

(V_{CC} = 5 V, V_{PP} = 90 V, V_{SSP} = 0 V, V_{SSLOG} = 0 V, V_{SSSUB} = 0 V, T_{amb} = 25°C, f_{CLK} = 20 MHz, unless otherwise specified)

Symbol	Parameter	Test Conditions	Min.	Typ.	Max.	Unit
SUPPLY						
V_{CC}	Logic Supply Voltage		4.5	5	5.5	V
I_{CCH}	Logic Supply Current (all inputs high)		-	-	100	µA
I_{CCL}	Logic Dynamic Supply Current	f_{CLK} = 20 MHz	-	26	-	mA
V_{PP}	Power Output Supply Voltage		15	-	90	V
I_{PPH}	Power Output Supply Current (steady outputs)		-	-	100	µA
OUTPUT (V_{PP} = 15 V to 90 V)						
OUT 1- OUT 96						
V_{POUTH}	Power Output Voltage Drop (High Level) (versus V_{PP})	I_{POUTH} = - 30 mA I_{POUTH} = - 45mA	- -	4.0 4.5	6.0 6.5	V V
V_{POUTL}	Power Output Voltage Drop (Low Level)	I_{POUTL} = + 30 mA	-	1.6	4	V
V_{DOUTH}	Output Diode Voltage (High Level)	I_{DOUTH} = +45 mA (Note 5)	-	1.05	4	V
V_{DOUTL}	Output Diode Low Level	I_{DOUTL} = - 30mA (Note 5)	-	-0.95	-4	V
A1-A6, B1-B6						
V_{OH}	Logic Output (High Level)	I_{OH} = -1 mA	4	4.2	-	V
V_{OL}	Logic Output (Low Level)	I_{OL} = +1 mA	-	0.12	0.4	V
INPUT						
CLK, FOR/ $\overline{REV}$, STB, $\overline{POL}$, $\overline{BLK}$, A1-A6, B1-B6						
V_{IH}	Input Voltage (High Level)		0.8 V_{CC}	-	-	V
V_{IL}	Input Voltage (Low Level)		-	-	0.2V_{CC}	V
I_{IH}	High Level Input Current	V_{IH} = V_{CC}	-	-	10	µA
I_{IL}	Low Level Input Current CLK, A1-A6, B1-B6, STB, FOR/ $\overline{REV}$, $\overline{BLK}$, $\overline{POL}$	V_{IL} = 0 V	 - -	 - -	 -10 -40	 µA µA

Note 5 See test diagram page 14.

AC TIMINGS REQUIREMENTS

(V_{CC} = 4.5 V to 5.5 V, T_{amb} = -20 to +85°C, input signals max leading edge & trailing edge (t_R, t_F) = 10 ns)

Symbol	Parameter	Min.	Typ.	Max.	Unit
t_{WHCLK}	Duration of clock (CLK) pulse at high level	15	-	-	ns
t_{WLCLK}	Duration of clock (CLK) pulse at low level	15	-	-	ns
t_{SDAT}	Set-up Time of data input before clock (low to high) transition	10	-	-	ns
t_{HDAT}	Hold Time of data input after clock (low to high) transition	10	-	-	ns
t_{SFR}	Forward/$\overline{\text{reverse}}$ (FOR/ $\overline{\text{REV}}$) Set-up Time before clock (low to high) transition	100			
t_{DSTB}	Minimum Delay to latch ($\overline{\text{STB}}$) after clock (low to high) transition	10	-	-	ns
t_{SSTB}	Minimum Delay to latch ($\overline{\text{STB}}$) before clock (low to high) transition	10	-	-	ns
t_{STB}	Latch ($\overline{\text{STB}}$) Low Level Pulse Duration	20	-	-	ns
t_{BLK}	Blanking ($\overline{\text{BLK}}$) Pulse Duration	500	-	-	ns
t_{POL}	Polarity ($\overline{\text{POL}}$) Pulse Duration	500	-	-	ns

AC TIMINGS CHARACTERISTICS

(V_{CC} = 5 V, V_{PP} = 90 V, V_{SPP} = 0 V, V_{SSLOG} = 0 V, V_{SSSUB} = 0 V, T_{amb} = 25°C)

($V_{IL(Max.)}$ = 0.2 Vcc, $V_{IH(Min.)}$ = 0.8 V_{CC}, V_{OH} = 4.0V, V_{OL} = 0.4 V, unless otherwise specified)

Symbol	Parameter	Min.	Typ.	Max.	Unit
t_{CLK}	Data clock Period	50	-	-	ns
t_{RDAT}	Logical Data Output Rise Time (CL=10pF)	-	12	20	ns
t_{FDAT}	Logical Data Output Fall Time (CL=10pF)	-	11	20	ns
t_{PHL1} t_{PLH1}	Delay of logic data output (high to low transition) after clock (CLK) transition Delay of logic data output (low to high transition) after clock (CLK) transition	- -	30 30	50 50	ns ns
t_{PHL2} t_{PLH2}	Delay of power output change (high to low transition) after clock (CLK) transition Delay of power output change (low to high transition) after clock (CLK) transition	- -	135 80	180 180	ns ns
t_{PHL3} t_{PLH3}	Delay of power output change (high to low transition) after Latch (STB) transition Delay of power output change (low to high transition) after Latch (STB) transition	- -	115 70	165 165	ns ns
t_{PHL4} t_{PLH4}	Delay of power output change (high to low transition) to Blank or Polarity ($\overline{\text{BLK}}$, $\overline{\text{POL}}$) transition Delay of power output change (low to high transition) to Blank or Polarity ($\overline{\text{BLK}}$, $\overline{\text{POL}}$) transition	- -	100 55	160 160	ns ns
t_{ROUT}	Power Output Rise Time (Note 6)	-	50	150	ns
t_{FOUT}	Power Output Fall Time (Note 6)	-	80	200	ns

Note 6 One output among 96, loading capacitor C_L = 50pF, other outputs at low level.

Figure 1. : AC Characteristics Waveform

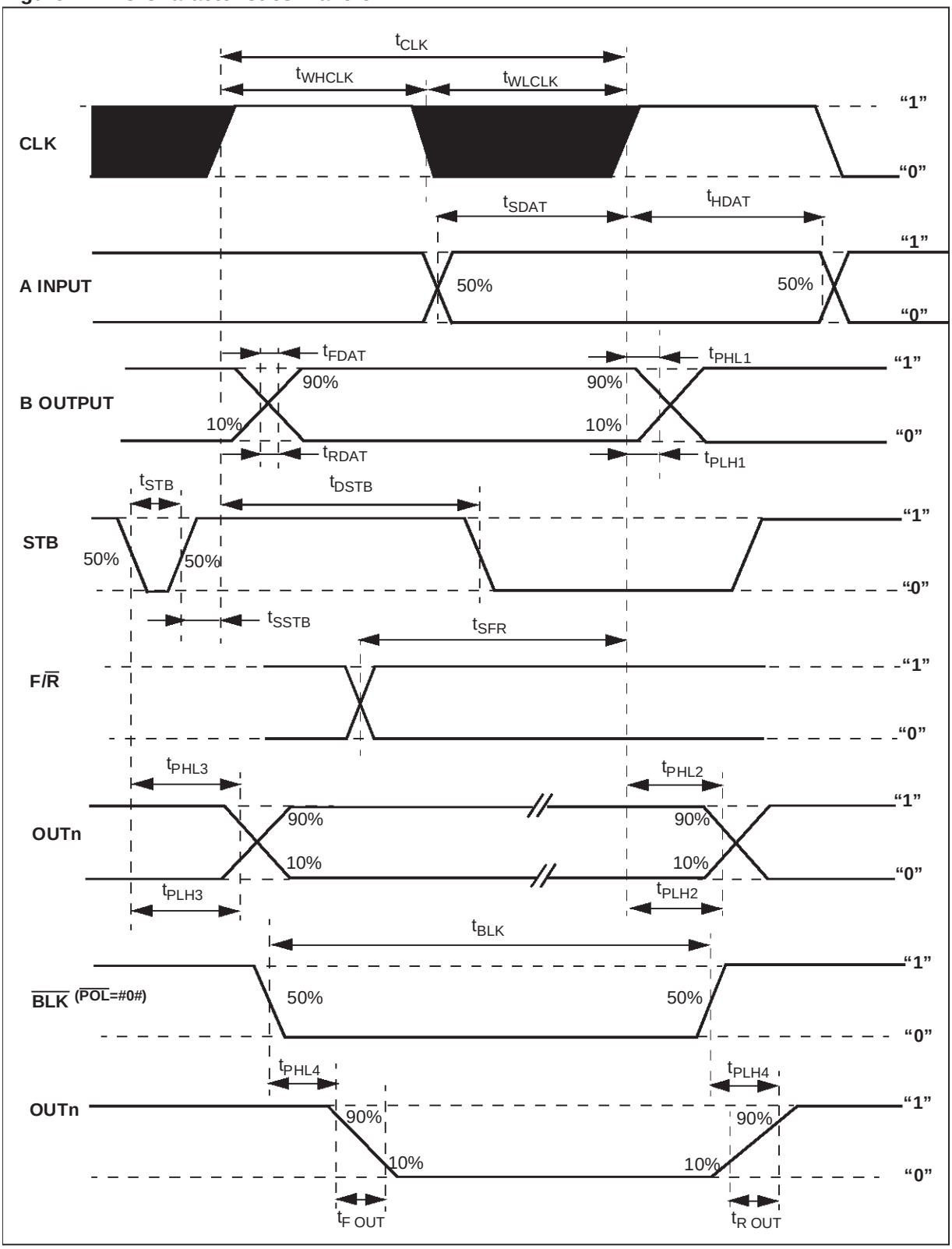

Figure 2. : Test Configuration

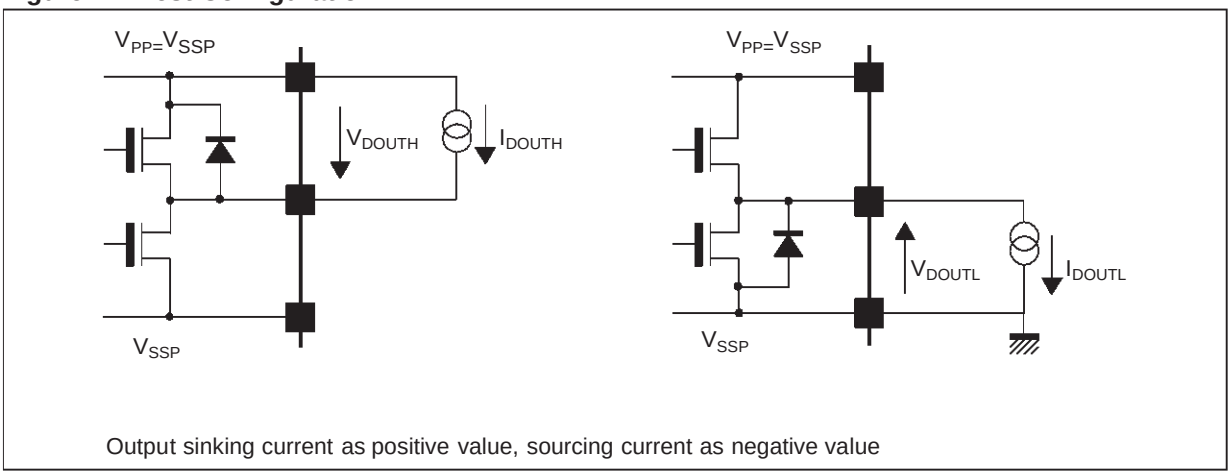

Output sinking current as positive value, sourcing current as negative value

INPUT/OUTPUT SCHEMATICS

Figure 3. : $\overline{POL}$, $\overline{BLK}$, F/$\overline{R}$ Input

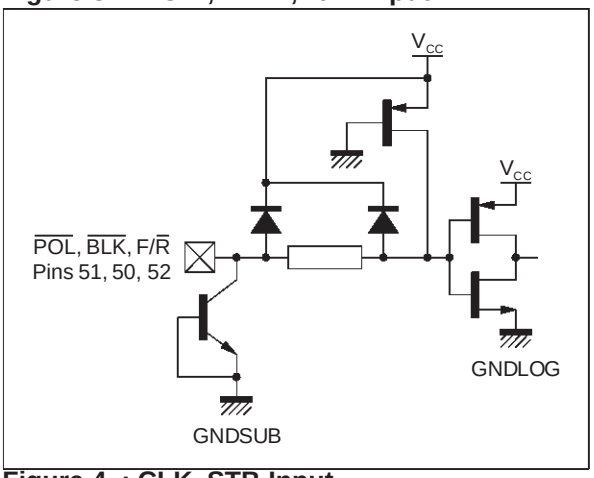

Figure 4. : CLK, STB Input

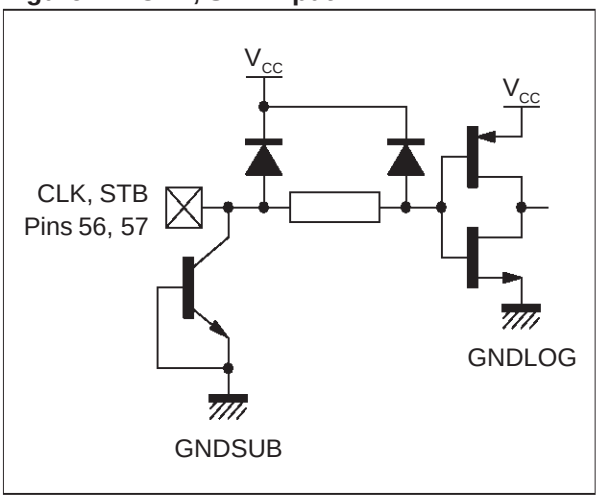

Figure 5. : A1 to A6, B1 to B6

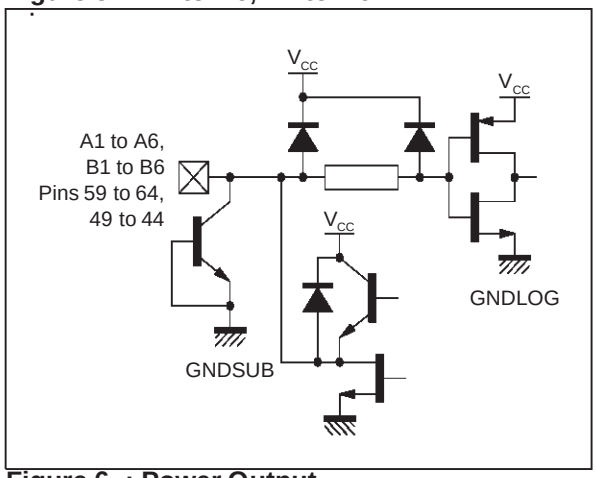

Figure 6. : Power Output

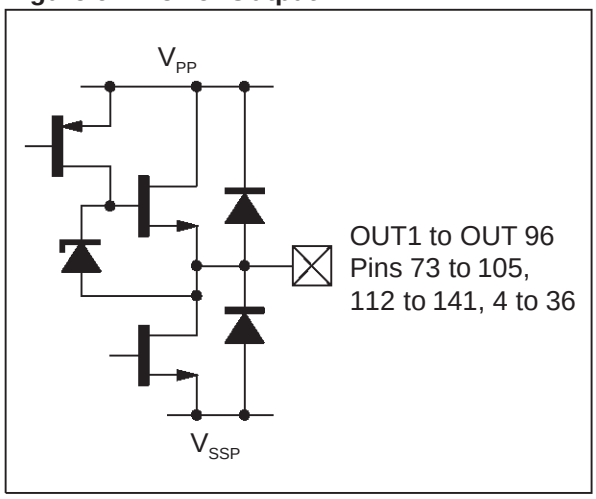

PACKAGE MECHANICAL DATA

144 PINS - THIN PLASTIC QUAD FLAT PACK (TQFP)

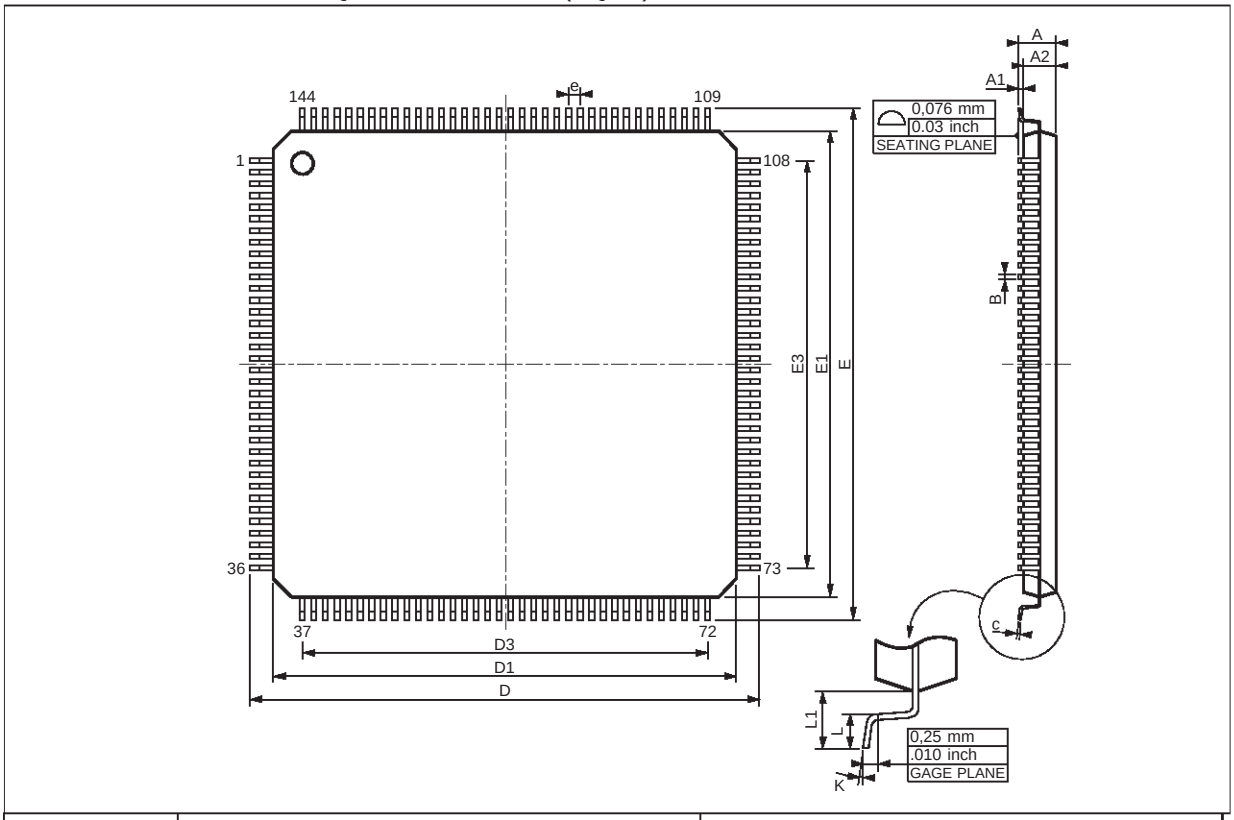

Dimensions	Millimeters			Inches		
	Min.	Typ.	Max.	Min.	Typ.	Max.
A			1.60			0.063
A1	0.05		0.15	0.002		0.006
A2	1.35	1.40	1.45	0.053	0.055	0.057
B	0.17	0.22	0.27	0.0067	0.0087	0.011
C	0.09		0.20	0.0035		0.008
D		22.00			0.866	
D1		20.00			0.787	
D3		17.50			0.689	
e		0.50			0.020	
E		22.00			0.866	
E1		20.00			0.787	
E3		17.50			0.689	
L	0.45	0.60	0.75	0.018	0.024	0.030
L1		1.00			0.039	
K	0° (Min.), 7° (Max.)					

Information furnished is believed to be accurate and reliable. However, STMicroelectronics assumes no responsibility for the consequences of use of such information nor for any infringement of patents or other rights of third parties which may result from its use. No license is granted by implication or otherwise under any patent or patent rights of STMicroelectronics. Specifications mentioned in this publication are subject to change without notice. This publication supersedes and replaces all information previously supplied. STMicroelectronics products are not authorized for use as critical components in life support devices or systems without express written approval of STMicroelectronics.

The ST logo is a trademark of STMicroelectronics.

© 2000 STMicroelectronics - All Rights Reserved

Purchase of I^2C Components of STMicroelectronics, conveys a license under the Philips I^2C Patent. Rights to use these components in a I^2C system, is granted provided that the system conforms to the I^2C Standard Specifications as defined by Philips.

STMicroelectronics GROUP OF COMPANIES

Australia - Brazil - China - Finland - France - Germany - Italy - Japan - Korea - Malaysia - Malta - Mexico - Morocco - The Netherlands - Singapore - Spain - Sweden - Switzerland - Taiwan - Thailand - United Kingdom - U.S.A.

http://www.st.com