SamHop Microelectronics Corp.

STU/D426S

Oct,2007 ver1.1

N-Channel Logic Level Enhancement Mode Field Effect Transistor

PRODUCT SUMMARY		
V_{DSS}	I_D	$R_{DS(ON)}$ (m Ω) Typ
40V	53A	8 @ V_{GS} = 10V
		10 @ V_{GS} = 4.5V

FEATURES

- Super high dense cell design for low $R_{DS(ON)}$.
- Rugged and reliable.
- TO-252 and TO-251 Package.



STU SERIES
TO-252AA(D-PAK)

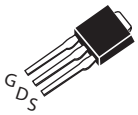

STD SERIES
TO-251(I-PAK)

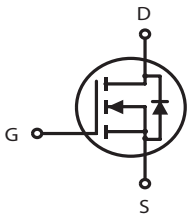

ABSOLUTE MAXIMUM RATINGS (Ta=25°C unless otherwise noted)

Parameter	Symbol	Limit	Unit
Drain-Source Voltage	V_{DS}	40	V
Gate-Source Voltage	V_{GS}	± 20	V
Drain Current-Continuous @Ta= 25°C	I_D	53	A
-Pulsed[a]	I_{DM}	100	A
Drain-Source Diode Forward Current	I_S	20	A
Avalanche Current[c]	I_{AS}	20	A
Avalanche Energy[c]	E_{AS}	100	mJ
Maximum Power Dissipation @Ta= 25°C	P_D	50	W
Operating Junction and Storage Temperature Range	T_J, T_{STG}	-55 to 175	°C

THERMAL CHARACTERISTICS

Thermal Resistance, Junction-to-Case	$R_{\theta JC}$	3	°C/W
Thermal Resistance, Junction-to-Ambient	$R_{\theta JA}$	50	°C/W

STU/D426S

ELECTRICAL CHARACTERISTICS (T_C=25°C unless otherwise noted)

Parameter	Symbol	Condition	Min	Typ [c]	Max	Unit
OFF CHARACTERISTICS						
Drain-Source Breakdown Voltage	BV_{DSS}	V_{GS}=0V, I_D=250uA	40			V
Drain-Source Breakdown Voltage [d]	BV_{DSS}	V_{GS}=0V, I_D=10mA	45			V
Zero Gate Voltage Drain Current	I_{DSS}	V_{DS}=32V, V_{GS}=0V			1	uA
Gate-Body Leakage	I_{GSS}	V_{GS}=±20V, V_{DS}=0V			±100	nA
ON CHARACTERISTICS [a]						
Gate Threshold Voltage	$V_{GS(th)}$	V_{DS}=V_{GS}, I_D=250uA	1	1.6	3	V
Drain-Source On-State Resistance	$R_{DS(ON)}$	V_{GS}=10V, I_D=10A		8	10	m ohm
		V_{GS}=4.5V, I_D=5A		10	12	m ohm
On-State Drain Current	$I_{D(ON)}$	V_{DS}=10V, V_{GS}=10V	30			A
Forward Transconductance	g_{FS}	V_{DS}=10V, I_D=10A		26		S
DYNAMIC CHARACTERISTICS [b]						
Input Capacitance	C_{ISS}	V_{DS}=15V, V_{GS}=0V f=1.0MHz		1600		pF
Output Capacitance	C_{OSS}			280		pF
Reverse Transfer Capacitance	C_{RSS}			150		pF
Gate resistance	Rg	V_{GS}=0V, V_{DS}=0V, f=1.0MHz		0.3		ohm
SWITCHING CHARACTERISTICS [b]						
Turn-On Delay Time	$t_{D(ON)}$	V_{DD}=15V I_D=1 A V_{GS}=10V R_{GEN}=6 ohm		20		ns
Rise Time	t_r			21		ns
Turn-Off Delay Time	$t_{D(OFF)}$			45		ns
Fall Time	t_f			16		ns
Total Gate Charge	Q_g	V_{DS}=15V, I_D=10A, V_{GS}=10V		32		nC
		V_{DS}=15V, I_D=10A, V_{GS}=4.5V		15		nC
Gate-Source Charge	Q_{gs}	V_{DS}=15V, I_D=10A V_{GS}=10V		3.5		nC
Gate-Drain Charge	Q_{gd}			7.3		nC

STU/D426S

ELECTRICAL CHARACTERISTICS (T_C=25°C unless otherwise noted)

Parameter	Symbol	Condition	Min	Typ	Max	Unit
DRAIN-SOURCE DIODE CHARACTERISTICS [a]						
Diode Forward Voltage	V_{SD}	V_{GS} = 0V, Is = 20A		0.95	1.3	V

Notes

a.Pulse Test:Pulse Width ≤ 300us, Duty Cycle ≤ 2%.

b.Guaranteed by design, not subject to production testing.

c. Starting T_J=25°C, L=0.5 mH, R_G=25Ω, I_{AS}= 20A, $V_{DD} \le V_{(BR)DSS}$ (See Figure15)

d. Pulse Test:Pulse Width ≤ 1us, Duty Cycle ≤ 1%.

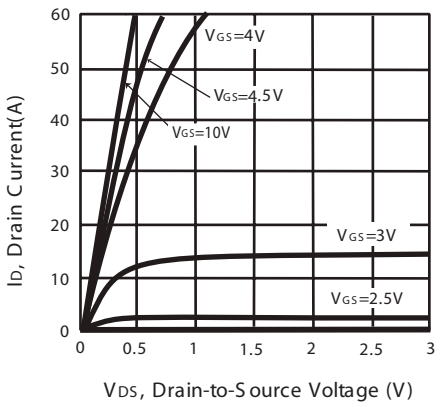

Figure 1. Output Characteristics

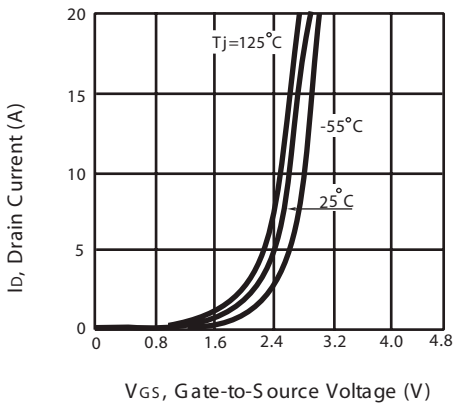

Figure 2. Transfer Characteristics

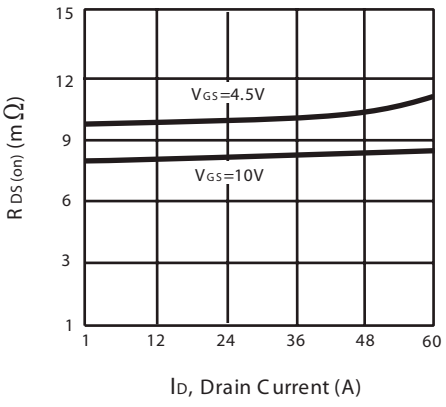

Figure 3. On-Resistance vs. Drain Current and Gate Voltage

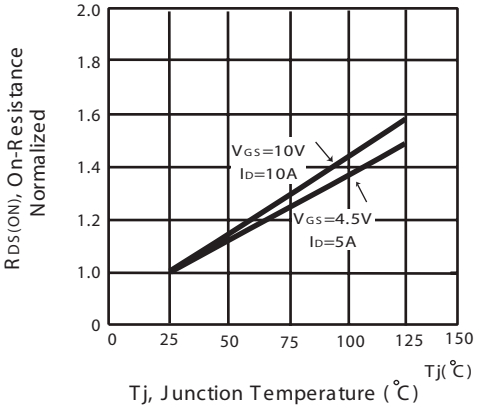

Figure 4. On-Resistance Variation with Drain Current and Temperature

STU/D426S

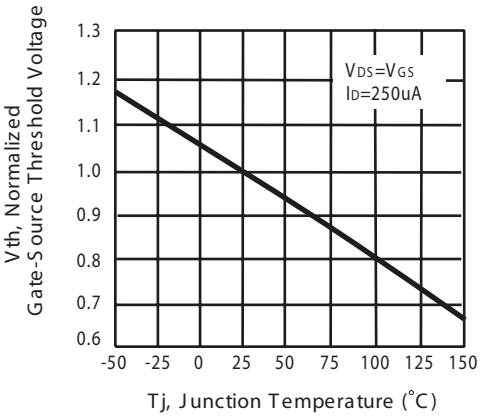

Figure 5. Gate Threshold Variation with Temperature

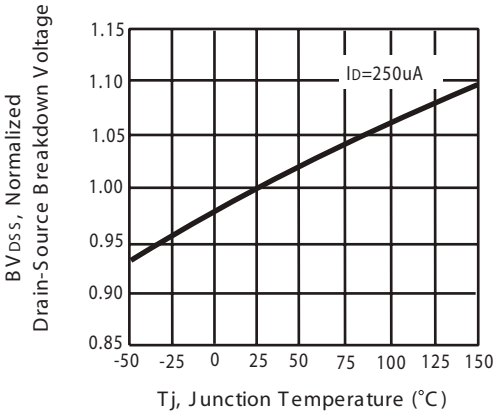

Figure 6. Breakdown Voltage Variation with Temperature

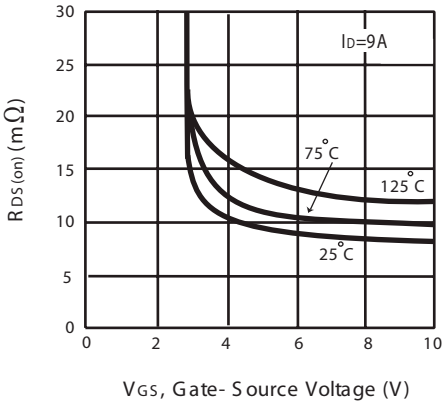

Figure 7. On-Resistance vs. Gate-Source Voltage

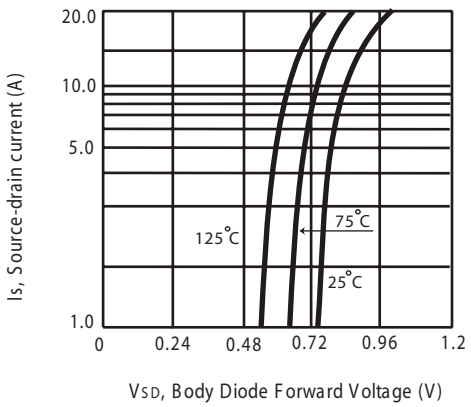

Figure 8. Body Diode Forward Voltage Variation with Source Current

STU/D426S

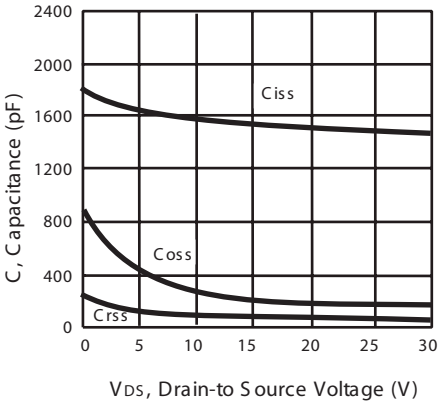

Figure 9. Capacitance

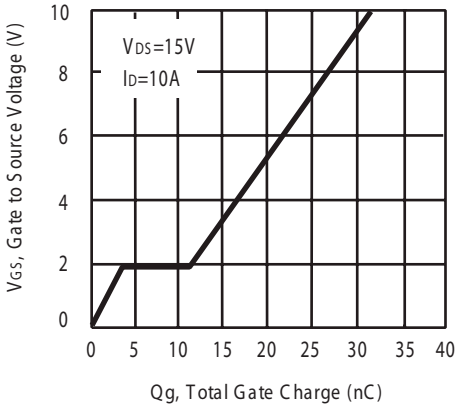

Figure 10. Gate Charge

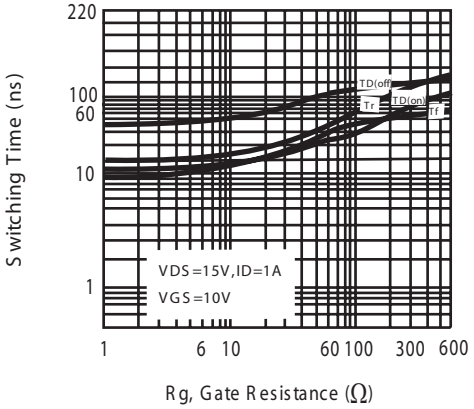

Figure 11.switching characteristics

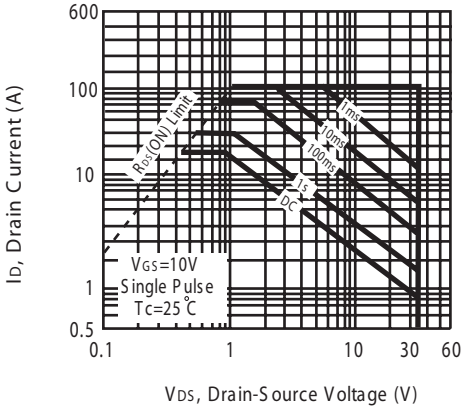

Figure 12. Maximum Safe Operating Area

STU/D426S

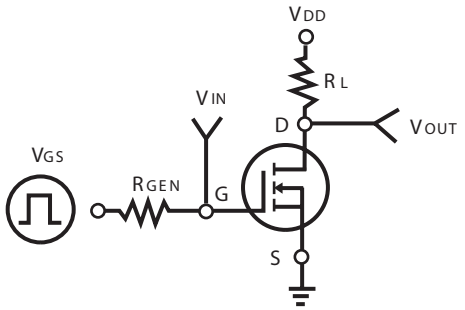

Figure 13. Switching Test Circuit

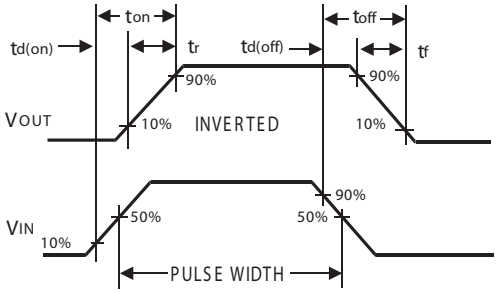

Figure 14. Switching Waveforms

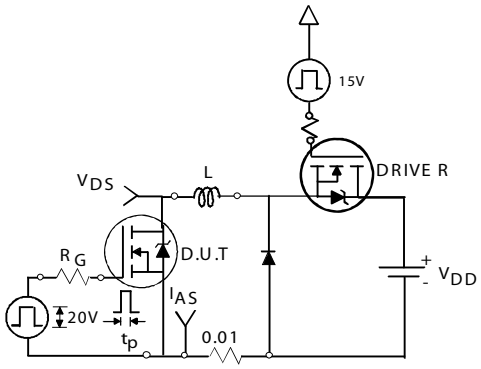

Unclamped Inductive Test Circuit

Figure 15a.

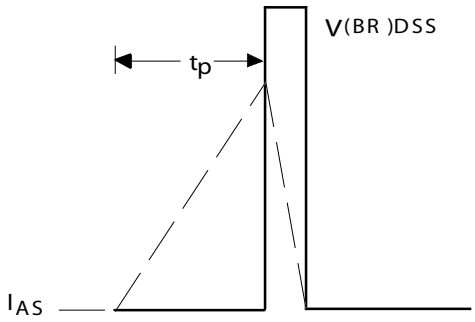

Unclamped Inductive Waveforms

Figure 15b.

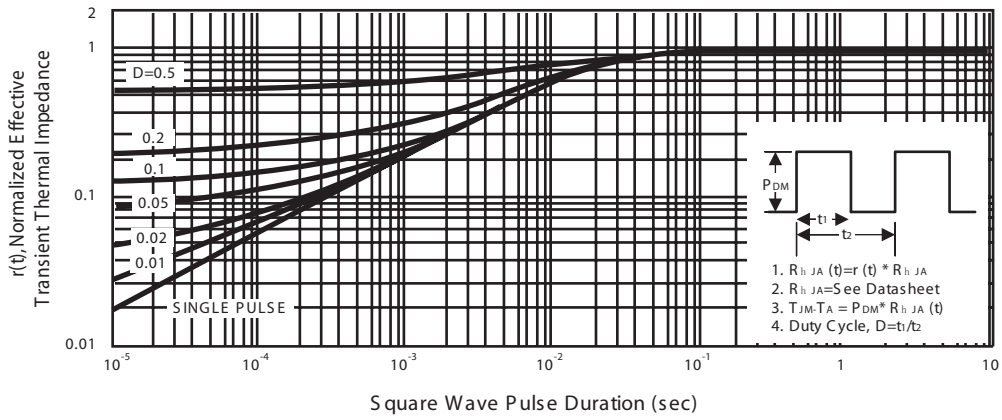

Figure 16. Normalized Thermal Transient Impedance Curve

STU/D426S

PACKAGE OUTLINE DIMENSIONS

TO-251

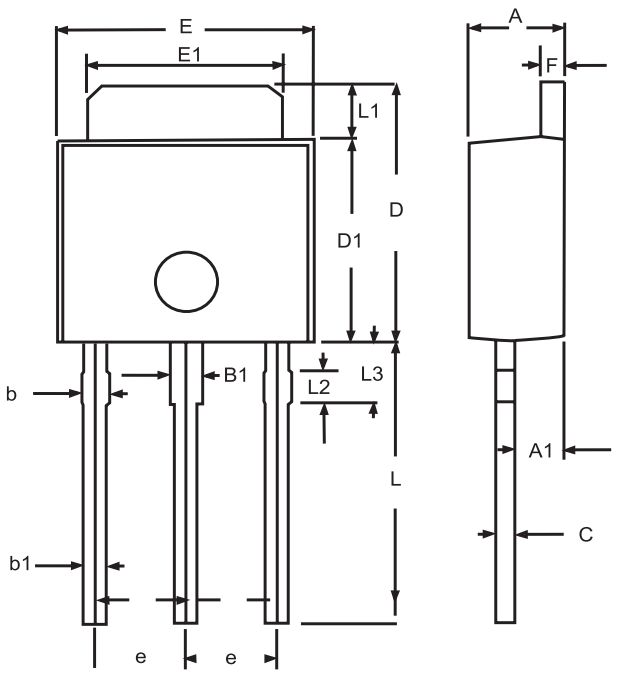

SYMBOLS	MILLIMETERS		INCHES	
	MIN	MAX	MIN	MAX
A	2.20	2.40	0.087	0.095
A1	1.100	1.300	0.043	0.051
B1	0.650	1.050	0.026	0.041
b	0.500	0.900	0.020	0.035
b1	0.400	0.800	0.016	0..32
C	0.400	0.600	0.016	0.024
D	6.700	7.300	0.264	0.287
D1	5.400	5.650	0.213	0.222
E	6.40	6.650	0.252	0.262
e	2.100	2.500	0.083	0.098
F	0.400	0.600	0.016	0.024
L	7.000	8.000	0.276	0.315
L1	1.300	1.700	0.051	0.067
L2	0.700	0.900	0.028	0.035
L3	1.400	1.800	0.055	0.071

STU/D426S

PACKAGE OUTLINE DIMENSIONS

TO-252

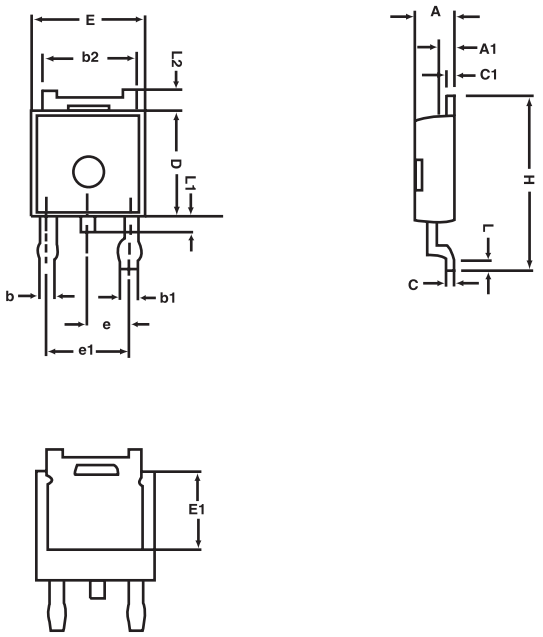

SYMBOLS	MILLIMETERS		INCHES	
	MIN	MAX	MIN	MAX
A	2.25	2.35	0.089	0.093
A1	0.95	1.05	0.037	0.041
b	0.77	0.85	0.030	0.033
b1	0.84	0.94	0.033	0.037
b2	5.30	5.45	0.209	0.215
C	0.49	0.53	0.019	0.021
D	6.00	6.20	0.236	0.244
E	6.40	6.60	0.252	0.260
E1	3.18	3.67	0.125	0.145
e	2.29	BSC	0.090	BSC
H	9.70	10.10	0.382	0.398
L	1.425	1.625	0.056	0.064
L1	0.650	0.850	0.026	0.033
L2	0.600	REF .	0.024	REF .

STU/D426S

TO251 Tube/TO-252 Tape and Reel Data

TO-251 Tube

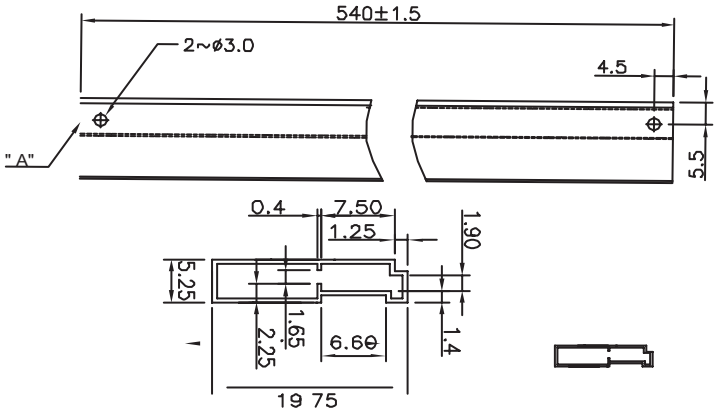

TO-252 Carrier Tape

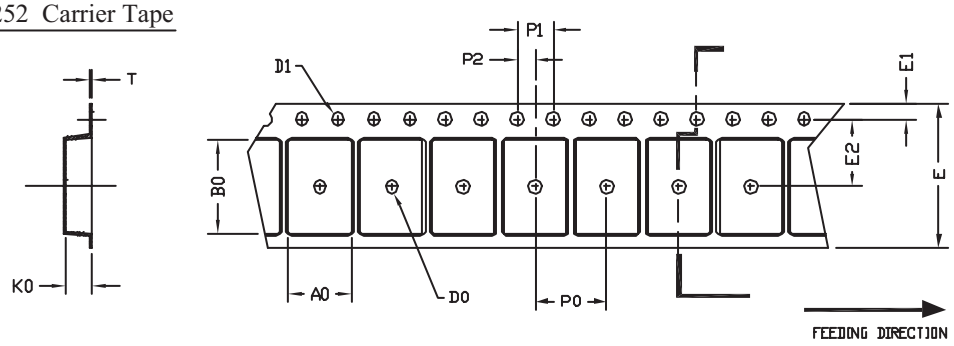

UNIT:㎜

PACKAGE	A0	B0	K0	D0	D1	E	E1	E2	P0	P1	P2	T
TO-252 (16 ㎜)	6.80 ±0.1	10.3 ±0.1	2.50 ±0.1	ϕ2	ϕ1.5 +0.1 -0	16.0 0.3±	1.75 0.1±	7.5 ±0.15	8.0 ±0.1	4.0 ±0.1	2.0 ±0.15	0.3 ±0.05

TO-252 Reel

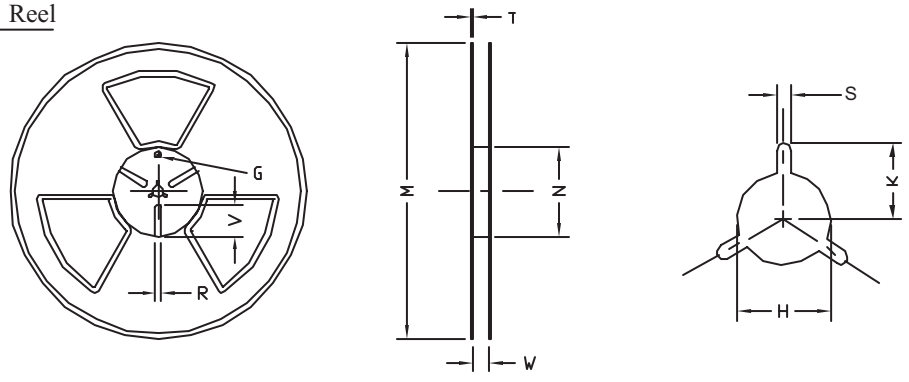

UNIT:㎜

TAPE SIZE	REEL SIZE	M	N	W	T	H	K	S	G	R	V
16 ㎜	ϕ 330	ϕ330 ± 0.5	ϕ97 ± 1.0	17.0 +1.5 -0	2.2	ϕ13.0 +0.5 -0.2	10.6	2.0 ±0.5	---	---	---