STU10NC70Z
STU10NC70ZI

N-CHANNEL 700V - 0.58Ω - 9.4A Max220/I-Max220
Zener-Protected PowerMESH™III MOSFET

TYPE	V_{DSS}	$R_{DS(on)}$	I_D
STU10NC70Z	700 V	<0.75Ω	9.4 A
STU10NC70ZI	700 V	<0.75Ω	9.4 A

- TYPICAL R_{DS}(on) = 0.58Ω
- EXTREMELY HIGH dv/dt CAPABILITY
- GATE-TO-SOURCE ZENER DIODES
- 100% AVALANCHE TESTED
- VERY LOW INTRINSIC CAPACITANCES
- GATE CHARGE MINIMIZED

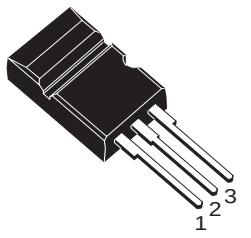

Max220

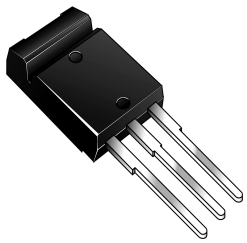

I-Max220

DESCRIPTION

The third generation of MESH OVERLAY™ Power MOSFETs for very high voltage exhibits unsurpassed on-resistance per unit area while integrating back-to-back Zener diodes between gate and source. Such arrangement gives extra ESD capability with higher ruggedness performance as requested by a large variety of single-switch applications.

INTERNAL SCHEMATIC DIAGRAM

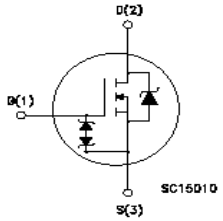

APPLICATIONS

- SINGLE-ENDED SMPS IN MONITORS, COMPUTER AND INDUSTRIAL APPLICATION
- WELDING EQUIPMENT

ABSOLUTE MAXIMUM RATINGS

Symbol	Parameter	Value		Unit
		STU10NC70Z	STU10NC70ZI	
V_{DS}	Drain-source Voltage (V_{GS} = 0)	700		V
V_{DGR}	Drain-gate Voltage (R_{GS} = 20 kΩ)	700		V
V_{GS}	Gate- source Voltage	±25		V
I_D	Drain Current (continuos) at T_C = 25°C	9.4	9.4(*)	A
I_D	Drain Current (continuos) at T_C = 100°C	5.9	5.9(*)	A
I_{DM} (1)	Drain Current (pulsed)	37.6	37.6(*)	A
P_{TOT}	Total Dissipation at T_C = 25°C	160	55	W
	Derating Factor	1.28	0.44	W/°C
I_{GS}	Gate-source Current	±50		mA
$V_{ESD(G-S)}$	Gate source ESD(HBM-C=100pF, R=15KΩ)	4		KV
dv/dt(•)	Peak Diode Recovery voltage slope	3		V/ns
V_{ISO}	Insulation Winthstand Voltage (DC)	--	2000	V
T_{stg}	Storage Temperature	–65 to 150		°C
T_j	Max. Operating Junction Temperature	150		°C

(•)Pulse width limited by safe operating area

(1)I_{SD} ≤9.4A, di/dt ≤100A/µs, V_{DD} ≤ $V_{(BR)DSS}$, T_j ≤ T_{JMAX}
(*)Limited only by maximum temperature allowed

THERMAL DATA

		Max220	I-Max220	
Rthj-case	Thermal Resistance Junction-case Max	0.78	2.27	°C/W
Rthj-amb	Thermal Resistance Junction-ambient Max	30		°C/W
Rthc-sink	Thermal Resistance Case-sink Typ	0.1		°C/W
T_l	Maximum Lead Temperature For Soldering Purpose	300		°C

AVALANCHE CHARACTERISTICS

Symbol	Parameter	Max Value	Unit
I_{AR}	Avalanche Current, Repetitive or Not-Repetitive (pulse width limited by T_j max)	9.4	A
E_{AS}	Single Pulse Avalanche Energy (starting T_j = 25 °C, I_D = I_{AR}, V_{DD} = 50 V)	400	mJ

ELECTRICAL CHARACTERISTICS (TCASE = 25 °C UNLESS OTHERWISE SPECIFIED)

OFF

Symbol	Parameter	Test Conditions	Min.	Typ.	Max.	Unit
$V_{(BR)DSS}$	Drain-source Breakdown Voltage	I_D = 250 µA, V_{GS} = 0	700			V
$\Delta BV_{DSS}/\Delta T_J$	Breakdown Voltage Temp. Coefficient	I_D = 1 mA, V_{GS} = 0		1		V/°C
I_{DSS}	Zero Gate Voltage Drain Current (V_{GS} = 0)	V_{DS} = Max Rating			1	µA
		V_{DS} = Max Rating, T_C = 125 °C			50	µA
I_{GSS}	Gate-body Leakage Current (V_{DS} = 0)	V_{GS} = ±20V			±10	µA

ON (1)

Symbol	Parameter	Test Conditions	Min.	Typ.	Max.	Unit
$V_{GS(th)}$	Gate Threshold Voltage	V_{DS} = V_{GS}, I_D = 250µA	3	4	5	V
$R_{DS(on)}$	Static Drain-source On Resistance	V_{GS} = 10V, I_D = 5.3A		0.58	0.75	Ω
$I_{D(on)}$	On State Drain Current	V_{DS} > $I_{D(on)}$ x $R_{DS(on)max}$, V_{GS} = 10V	9.4			A

DYNAMIC

Symbol	Parameter	Test Conditions	Min.	Typ.	Max.	Unit
g_{fs}	Forward Transconductance	V_{DS} > $I_{D(on)}$ x $R_{DS(on)max}$, I_D =5.3A		13		S
C_{iss}	Input Capacitance	V_{DS} = 25V, f = 1 MHz, V_{GS} = 0		3550		pF
C_{oss}	Output Capacitance			250		pF
C_{rss}	Reverse Transfer Capacitance			30		pF

ELECTRICAL CHARACTERISTICS (CONTINUED)

SWITCHING ON (RESISTIVE LOAD)

Symbol	Parameter	Test Conditions	Min.	Typ.	Max.	Unit
$t_{d(on)}$	Turn-on Delay Time	V_{DD} = 350V, I_D = 5.3A R_G = 4.7Ω V_{GS} = 10V (see test circuit, Figure 3)		34		ns
t_r	Rise Time			12		ns
Q_g	Total Gate Charge	V_{DD} = 560V, I_D = 10.6 A, V_{GS} = 10V		72	100	nC
Q_{gs}	Gate-Source Charge			19		nC
Q_{gd}	Gate-Drain Charge			24		nC

SWITCHING OFF (INDUCTIVE LOAD)

Symbol	Parameter	Test Conditions	Min.	Typ.	Max.	Unit
$t_{r(Voff)}$	Off-voltage Rise Time	V_{DD} = 560V, I_D = 10.6 A, R_G = 4.7Ω, V_{GS} = 10V (see test circuit, Figure 5)		34		ns
t_f	Fall Time			36		ns
t_c	Cross-over Time			80		ns

SOURCE DRAIN DIODE

Symbol	Parameter	Test Conditions	Min.	Typ.	Max.	Unit
I_{SD}	Source-drain Current				9.4	A
I_{SDM} (2)	Source-drain Current (pulsed)				37.6	A
V_{SD} (1)	Forward On Voltage	I_{SD} = 9.4 A, V_{GS} = 0			1.6	V
t_{rr}	Reverse Recovery Time	I_{SD} = 10.6 A, di/dt = 100A/µs, V_{DD} = 100V, T_j = 150°C (see test circuit, Figure 5)		660		ns
Q_{rr}	Reverse Recovery Charge			8.7		µC
I_{RRM}	Reverse Recovery Current			26		A

GATE-SOURCE ZENER DIODE

Symbol	Parameter	Test Conditions	Min.	Typ.	Max.	Unit
BV_{GSO}	Gate-Source Breakdown Voltage	Igs=± 1mA (Open Drain)	25			V
αT	Voltage Thermal Coefficient	T=25°C Note(3)		1.3		10^{-4}/°C
Rz	Dynamic Resistance	I_{GS} = 50 mA, V_{GS} = 0		90		Ω

Note: 1. Pulsed: Pulse duration = 300 µs, duty cycle 1.5 %.
2. Pulse width limited by safe operating area.
3. $\Delta V_{BV} = \alpha T\ (25°\text{-}T)\ BV_{GSO}(25°)$

PROTECTION FEATURES OF GATE-TO-SOURCE ZENER DIODES

The built-in back-to-back Zener diodes have specifically been designed to enhance not only the device's ESD capability, but also to make them safely absorb possible voltage transients that may occasionally be applied from gate to souce. In this respect the 25V Zener voltage is appropiate to achieve an efficient and cost-effective intervention to protect the device's integrity. These integrated Zener diodes thus avoid the usage of external components.

Safe Operating Area For Max220

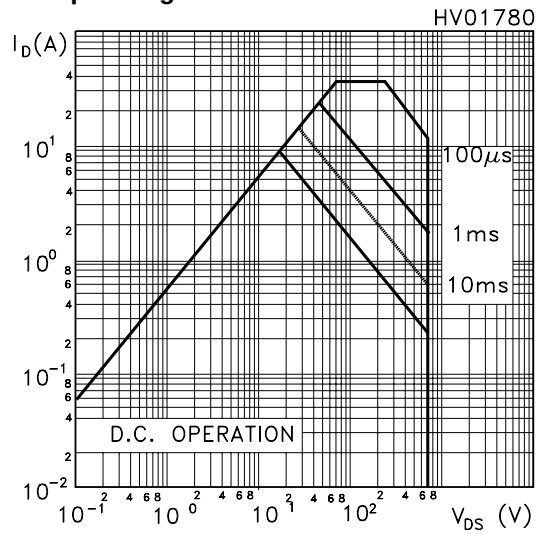

Safe Operating Area For I-Max220

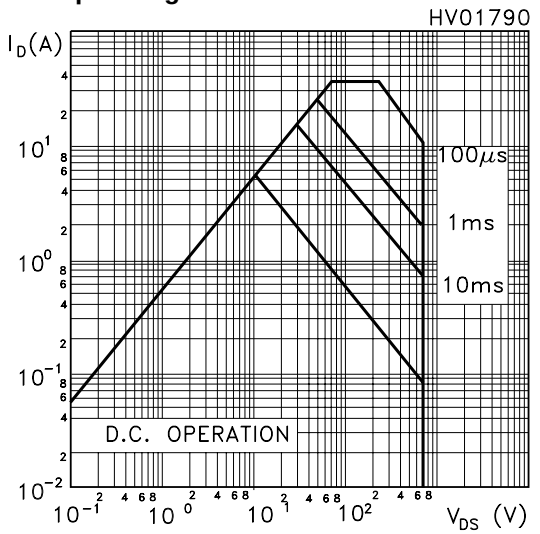

Thermal Impedance For Max220

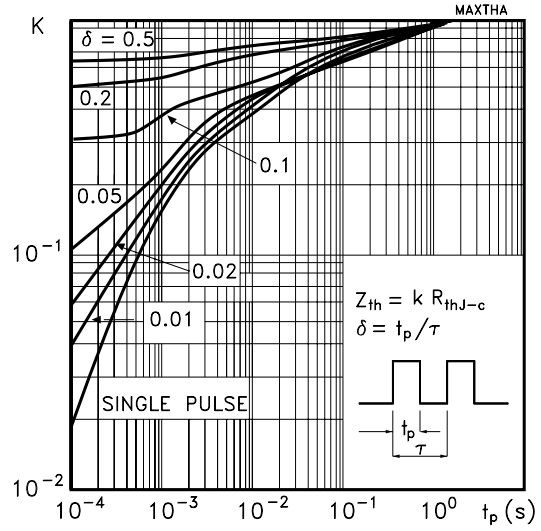

Thermal Impedance For I-Max220

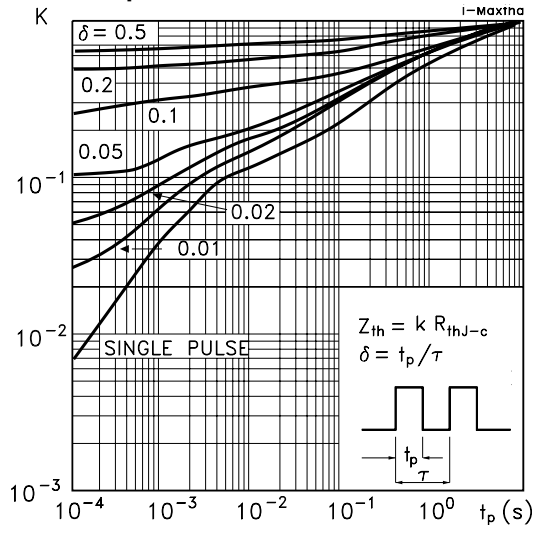

Output Characteristics

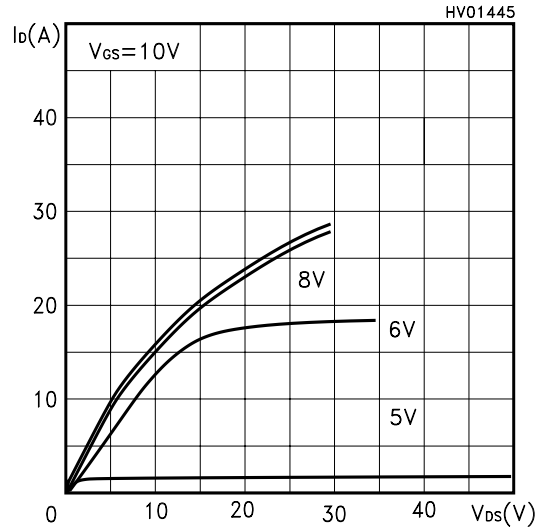

Transfer Characteristics

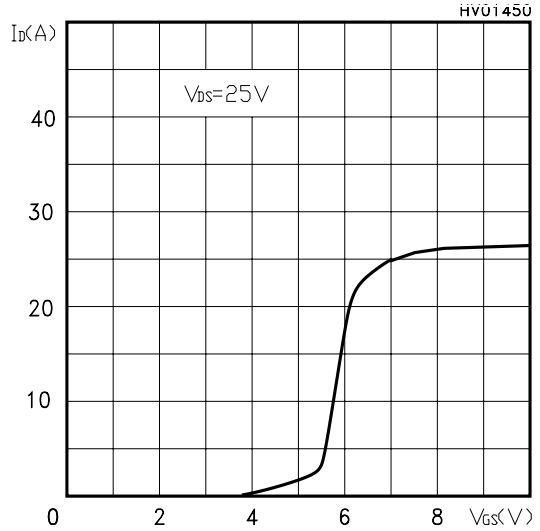

Transconductance

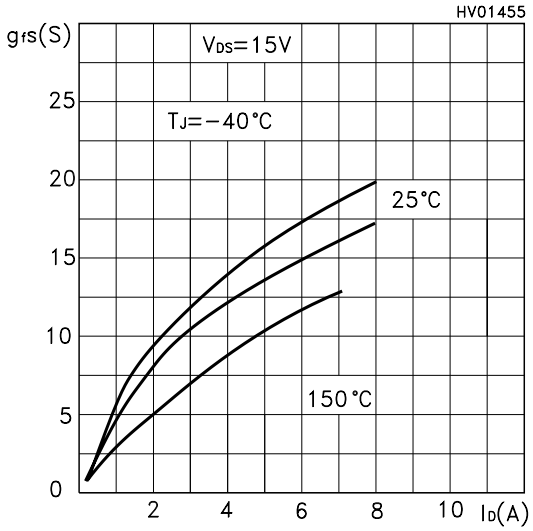

Static Drain-source On Resistance

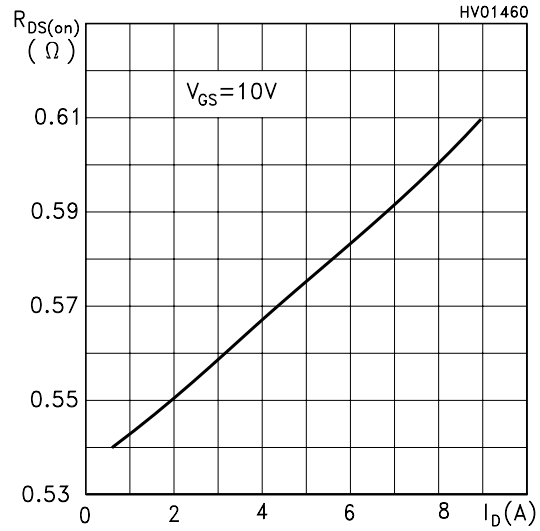

Gate Charge vs Gate-source Voltage

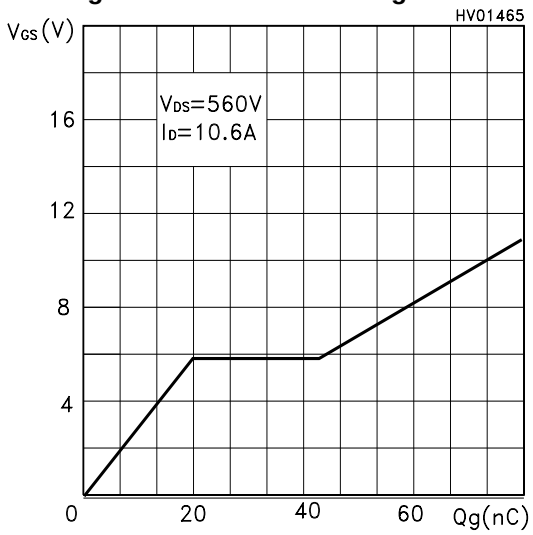

Capacitance Variations

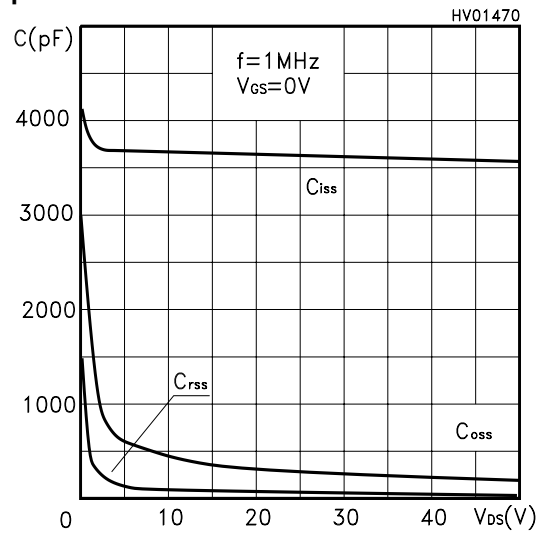

Normalized Gate Threshold Voltage vs Temp.

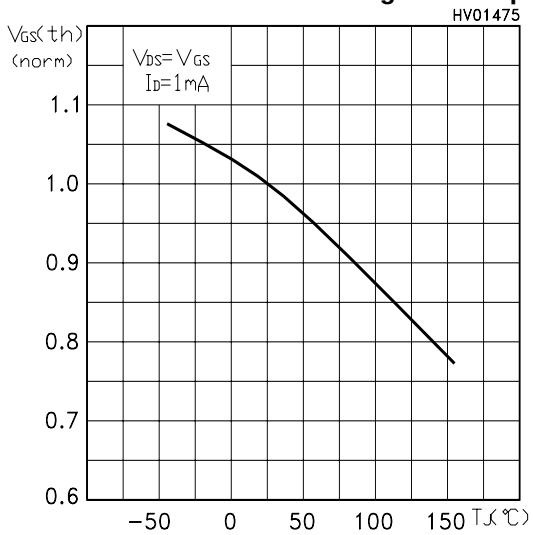

Normalized On Resistance vs Temperature

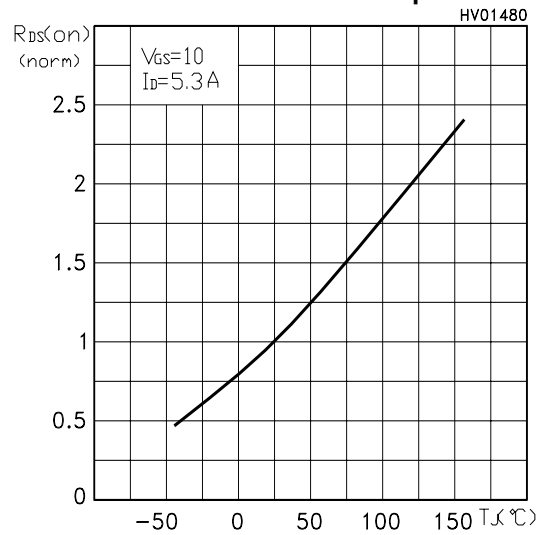

Source-drain Diode Forward Characteristics

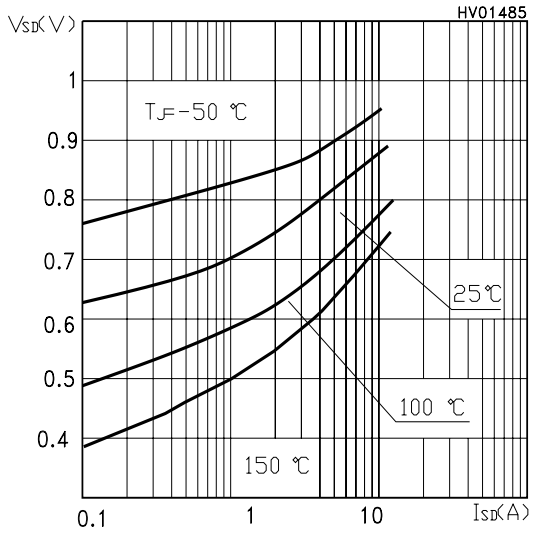

Fig. 1: Unclamped Inductive Load Test Circuit

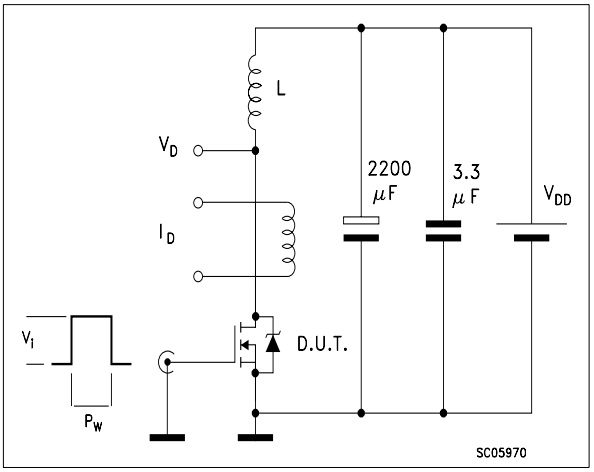

Fig. 2: Unclamped Inductive Waveform

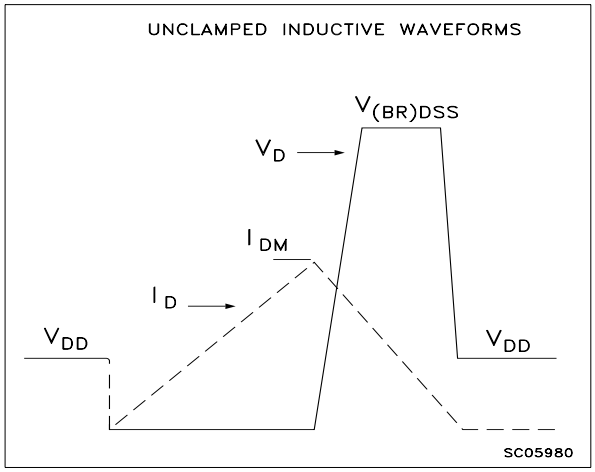

Fig. 3: Switching Times Test Circuit For Resistive Load

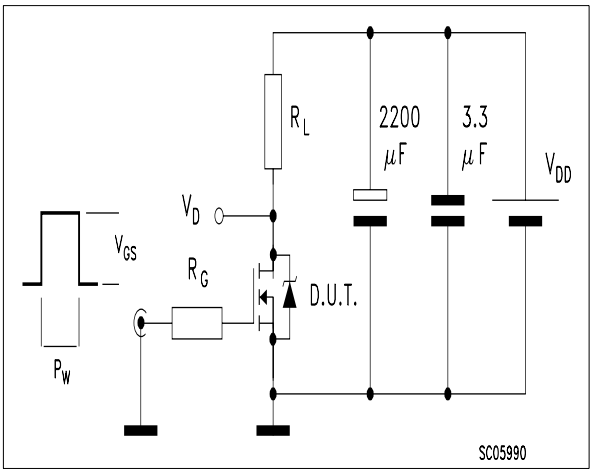

Fig. 4: Gate Charge test Circuit

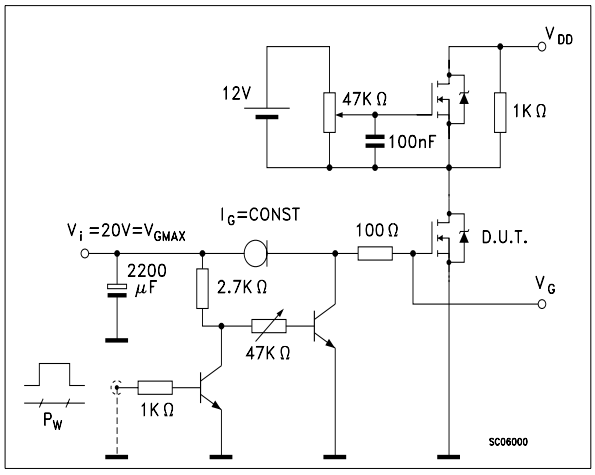

Fig. 5: Test Circuit For Inductive Load Switching And Diode Recovery Times

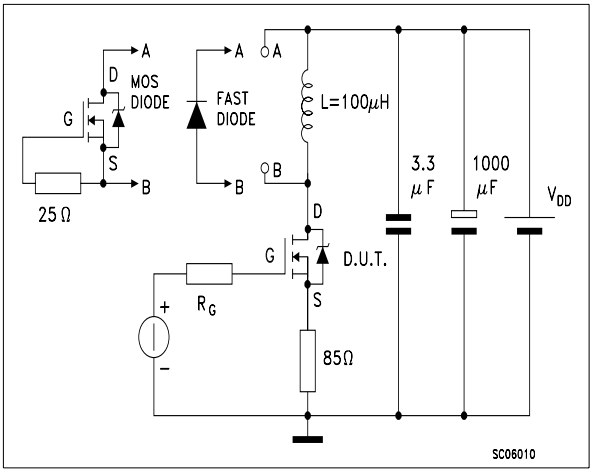

Max220 MECHANICAL DATA

DIM.	mm			inch		
	MIN.	TYP.	MAX.	MIN.	TYP.	MAX.
A	4.3		4.6	0.169		0.181
A1	2.2		2.4	0.087		0.094
A2	2.9		3.1	0.114		0.122
b	0.7		0.93	0.027		0.036
b1	1.25		1.4	0.049		0.055
b2	1.2		1.38	0.047		0.054
c	0.45		0.6		0.18	0.023
D	15.9		16.3		0.626	0.641
D1	9		9.35	0.354		0.368
D2	0.8		1.2	0.031		0.047
D3	2.8		3.2	0.110		0.126
e	2.44		2.64	0.096		0.104
E	10.05		10.35	0.396		0.407
L	13.2		13.6	0.520		0.535
L1	3		3.4	0.118		0.133

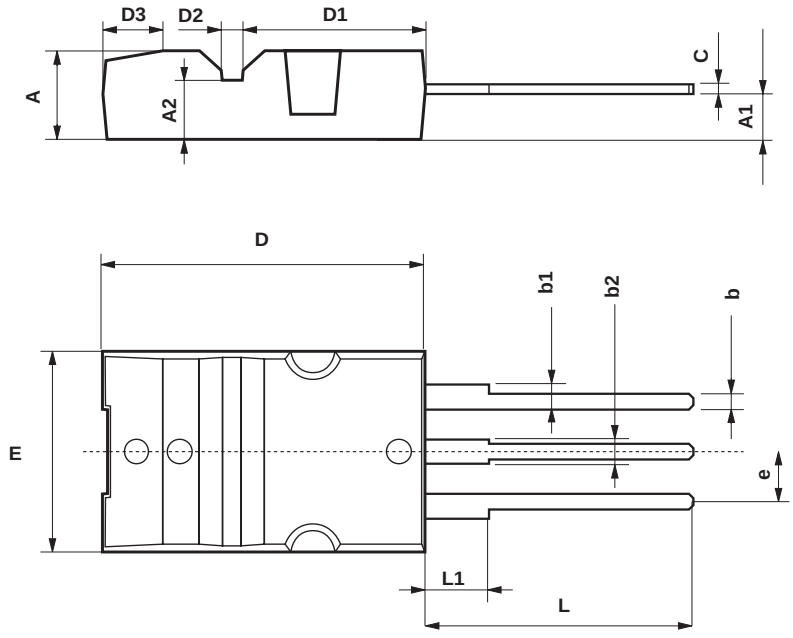

P011R

I-Max220 MECHANICAL DATA

DIM.	mm			inch		
	MIN.	TYP.	MAX.	MIN.	TYP.	MAX.
A	4.3		4.6	0.169		0.181
A1	2.6		2.75	0.102		0.108
A2	1.95		2.15	0.077		0.084
b	0.7		0.93	0.027		0.036
b1	1.25		1.4	0.049		0.055
b2	1.2		1.38	0.047		0.054
c	0.45		0.6	0.017		0.023
D	15.9		16.3	0.626		0.641
D1	12.5		12.9	0.492		0.508
D2	0.6		1	0.023		0.039
D3	1.75		2.15	0.069		0.084
e	2.44		2.64	0.096		0.104
E	10.05		10.35	0.396		0.407
L	13.2		13.6	0.520		0.535
L1	3		3.4	0.118		0.133

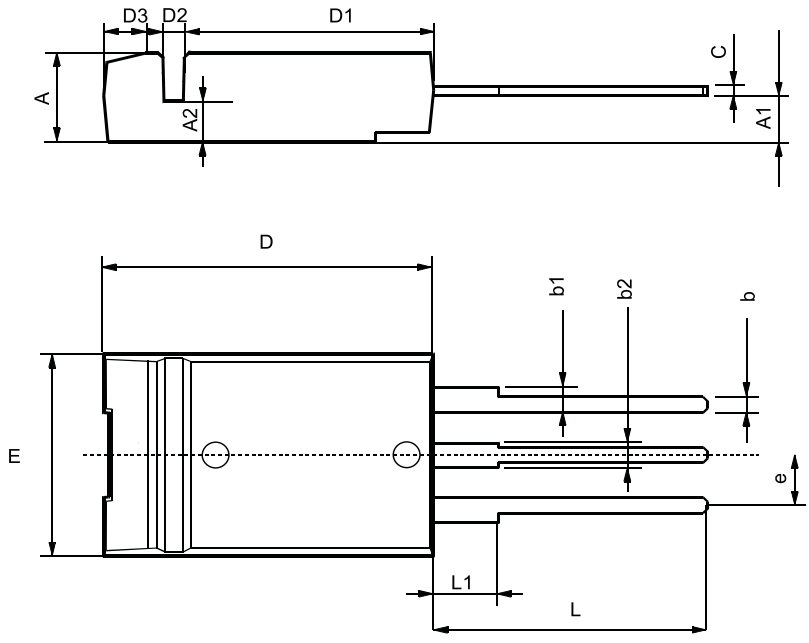

P011S

Information furnished is believed to be accurate and reliable. However, STMicroelectronics assumes no responsibility for the consequences of use of such information nor for any infringement of patents or other rights of third parties which may result from its use. No license is granted by implication or otherwise under any patent or patent rights of STMicroelectronics. Specification mentioned in this publication are subject to change without notice. This publication supersedes and replaces all information previously supplied. STMicroelectronics products are not authorized for use as critical components in life support devices or systems without express written approval of STMicroelectronics.

The ST logo is a trademark of STMicroelectronics

© 2000 STMicroelectronics – Printed in Italy – All Rights Reserved

STMicroelectronics GROUP OF COMPANIES

Australia - Brazil - China - Finland - France - Germany - Hong Kong - India - Italy - Japan - Malaysia - Malta - Morocco - Singapore - Spain - Sweden - Switzerland - United Kingdom - U.S.A.

http://www.st.com