STTH3010

Ultrafast recovery - high voltage diode

Main product characteristics

$I_{F(AV)}$	30 A
V_{RRM}	1000 V
T_j	175° C
V_F (typ)	1.30 V
t_{rr} (typ)	42 ns

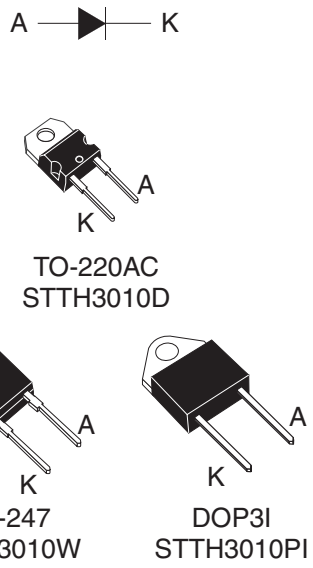

TO-220AC
STTH3010D

DO-247
STTH3010W

DOP3I
STTH3010PI

Features and benefits

- Ultrafast, soft recovery
- Very low conduction and switching losses
- High frequency and/or high pulsed current operation
- High reverse voltage capability
- High junction temperature
- Insulated package:
  - DOP3I
    Electrical insulation = 2500 V_{RMS}
    Capacitance = 12 pF

Description

The high quality design of this diode has produced a device with low leakage current, regularly reproducible characteristics and intrinsic ruggedness. These characteristics make it ideal for heavy duty applications that demand long term reliability.

Such demanding applications include industrial power supplies, motor control, and similar mission-critical systems that require rectification and freewheeling. These diodes also fit into auxiliary functions such as snubber, bootstrap, and demagnetization applications.

The improved performance in low leakage current, and therefore thermal runaway guard band, is an immediate competitive advantage for this device.

Order codes

Part Number	Marking
STTH3010D	STTH3010D
STTH3010W	STTH3010W
STTH3010PI	STTH3010PI

1 Characteristics

Table 1. Absolute ratings (limiting values at 25° C, unless otherwise specified)

Symbol	Parameter			Value	Unit
V_{RRM}	Repetitive peak reverse voltage			1000	V
$I_{F(RMS)}$	RMS forward current			50	A
$I_{F(AV)}$	Average forward current, $\delta = 0.5$	TO-220 / DO-247	T_c = 105° C	30	A
		DOP3I	T_c = 65° C		
I_{FRM}	Repetitive peak forward current	t_p = 5 µs, F = 5 kHz square		300	A
I_{FSM}	Surge non repetitive forward current	t_p = 10 ms Sinusoidal		180	A
T_{stg}	Storage temperature range			-65 to + 175	°C
T_j	Maximum operating junction temperature			175	°C

Table 2. Thermal parameters

Symbol	Parameter		Value	Unit
$R_{th(j-c)}$	Junction to case	TO-220 / DO-247	1.1	°C/W
		DOP3I	1.8	

Table 3. Static electrical characteristics

Symbol	Parameter	Test conditions		Min.	Typ	Max.	Unit
I_R(1)	Reverse leakage current	T_j = 25° C	$V_R = V_{RRM}$			15	µA
		T_j = 125° C			10	100	
V_F(2)	Forward voltage drop	T_j = 25° C	I_F = 30 A			2	V
		T_j = 100° C			1.4	1.8	
		T_j = 150° C			1.3	1.7	

1. Pulse test: t_p = 5 ms, δ < 2 %
2. Pulse test: t_p = 380 µs, δ < 2 %

To evaluate the conduction losses use the following equation:
$P = 1.3 \times I_{F(AV)} + 0.013\ I_F{}^2{}_{(RMS)}$

Table 4. Dynamic characteristics

Symbol	Parameter	Test conditions	Min.	Typ	Max.	Unit
t_{rr}	Reverse recovery time	I_F = 1 A, dI_F/dt = -50 A/µs, V_R = 30 V, T_j = 25° C			100	ns
		I_F = 1 A, dI_F/dt = -100 A/µs, V_R = 30 V, T_j = 25° C		53	70	
		I_F = 1 A, dI_F/dt = -200 A/µs, V_R = 30 V, T_j = 25° C		42	55	
I_{RM}	Reverse recovery current	I_F = 30 A, dI_F/dt = -200 A/µs, V_R = 600 V, T_j = 125° C		24	32	A
S	Softness factor	I_F = 30 A, dI_F/dt = -200 A/µs, V_R = 600 V, T_j = 125° C		1		
t_{fr}	Forward recovery time	I_F = 30 A dI_F/dt = 100 A/µs V_{FR} = 1.5 x V_{Fmax}, T_j = 25° C			450	ns
V_{FP}	Forward recovery voltage	I_F = 30 A, dI_F/dt = 100 A/µs, T_j = 25° C		5		V

Figure 1. Conduction losses versus average current

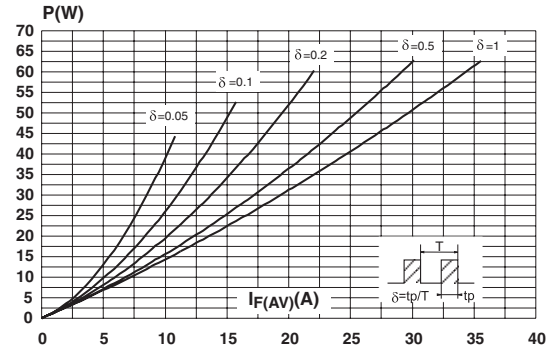

Figure 2. Forward voltage drop versus forward current

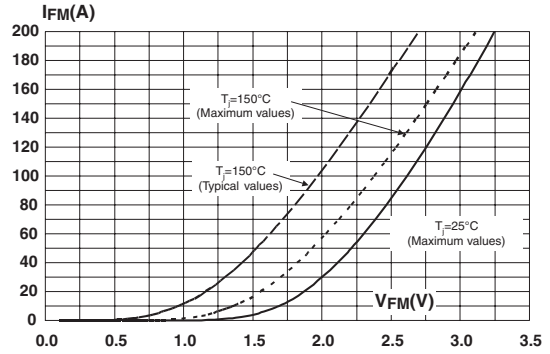

Figure 3. Relative variation of thermal impedance junction to case versus pulse duration

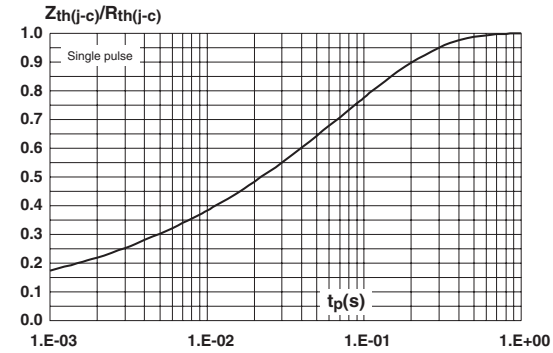

Figure 4. Peak reverse recovery current versus dI_F/dt (typical values)

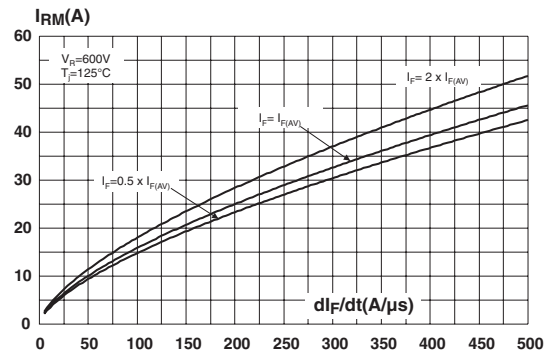

Figure 5. Reverse recovery time versus dI_F/dt (typical values)

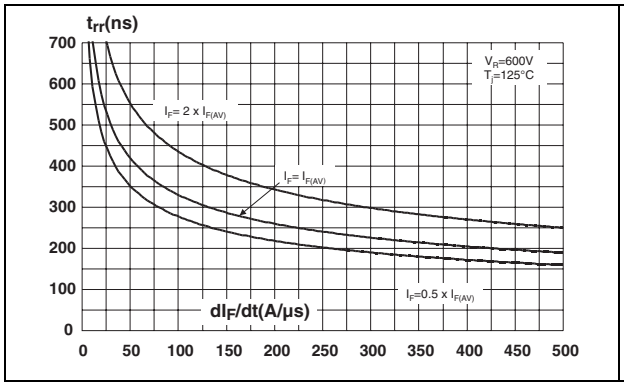

Figure 6. Reverse recovery charges versus dI_F/dt (typical values)

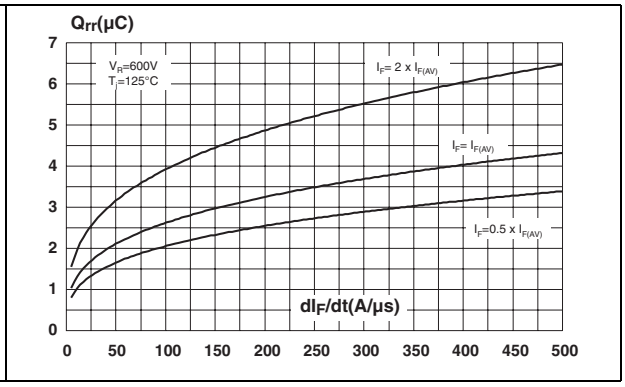

Figure 7. Softness factor versus dI_F/dt (typical values)

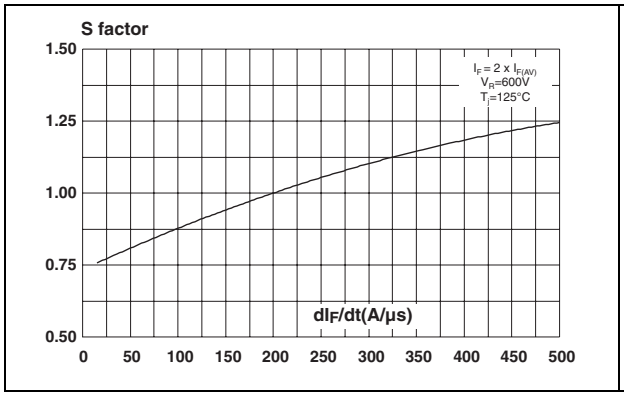

Figure 8. Relative variations of dynamic parameters versus junction temperature

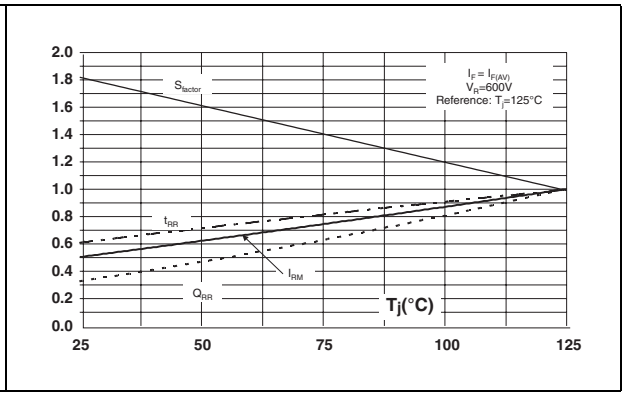

Figure 9. Transient peak forward voltage versus dI_F/dt (typical values)

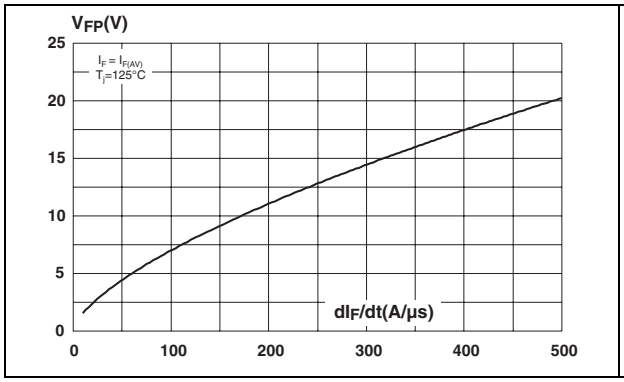

Figure 10. Forward recovery time versus dI_F/dt (typical values)

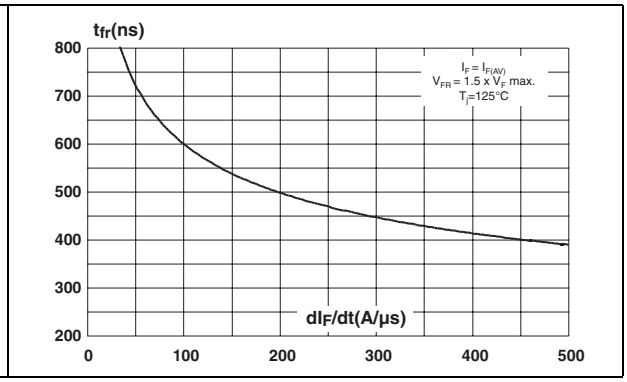

Figure 11. Junction capacitance versus reverse voltage applied (typical values)

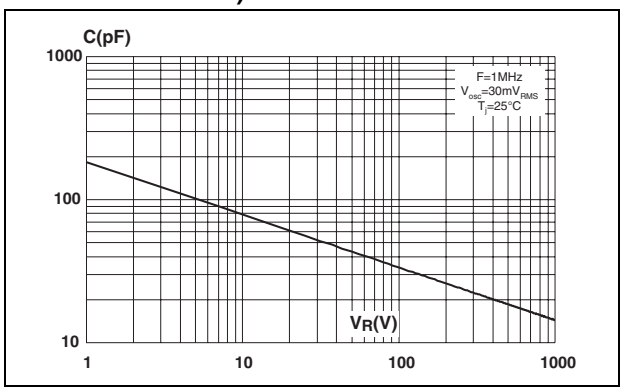

2 Package information

Epoxy meets UL94, V0

Cooling method: by conduction (C)

Recommended torque value: 0.55 Nm (TO-220AC)

Recommended torque value: 0.80 Nm (SOD93, DOP31, and DO-247)

Maximum torque value: 0.7 Nm (TO-220AC)

Maximum torque value: 1.0 Nm (SOD93, DOP31, and DO-247)

Table 5. DO-247 dimensions

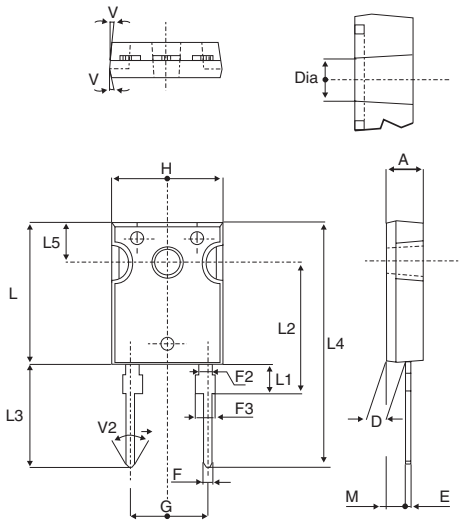

REF.	DIMENSIONS					
	Millimeters			Inches		
	Min.		Max	Min.		Max.
A	4.85		5.15	0.191		0.203
D	2.20		2.60	0.086		0.102
E	0.40		0.80	0.015		0.031
F	1.00		1.40	0.039		0.055
F2		2.00			0.078	
F3	2.00		2.40	0.078		0.094
G		10.90			0.429	
H	15.45		15.75	0.608		0.620
L	19.85		20.15	0.781		0.793
L1	3.70		4.30	0.145		0.169
L2		18.50			0.728	
L3	14.20		14.80	0.559		0.582
L4		34.60			1.362	
L5		5.50			0.216	
M	2.00		3.00	0.078		0.118
V		5°			5°	
V2		60°			60°	
Dia.	3.55		3.65	0.139		0.143

Table 6. T0-220AC dimensions

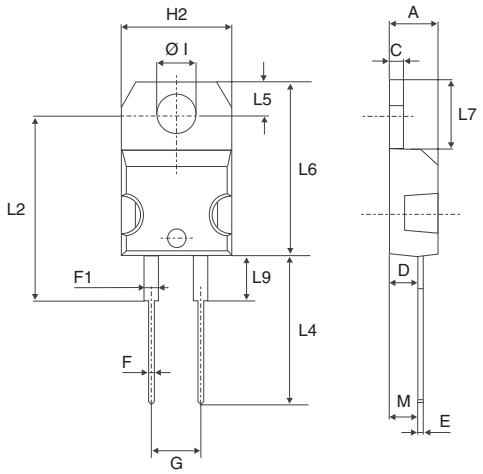

REF.	DIMENSIONS			
	Millimeters		Inches	
	Min.	Max.	Min.	Max.
A	4.40	4.60	0.173	0.181
C	1.23	1.32	0.048	0.051
D	2.40	2.72	0.094	0.107
E	0.49	0.70	0.019	0.027
F	0.61	0.88	0.024	0.034
F1	1.14	1.70	0.044	0.066
G	4.95	5.15	0.194	0.202
H2	10.00	10.40	0.393	0.409
L2	16.40 typ.		0.645 typ.	
L4	13.00	14.00	0.511	0.551
L5	2.65	2.95	0.104	0.116
L6	15.25	15.75	0.600	0.620
L7	6.20	6.60	0.244	0.259
L9	3.50	3.93	0.137	0.154
M	2.6 typ.		0.102 typ.	
Diam. I	3.75	3.85	0.147	0.151

Table 7. DOP3I dimensions

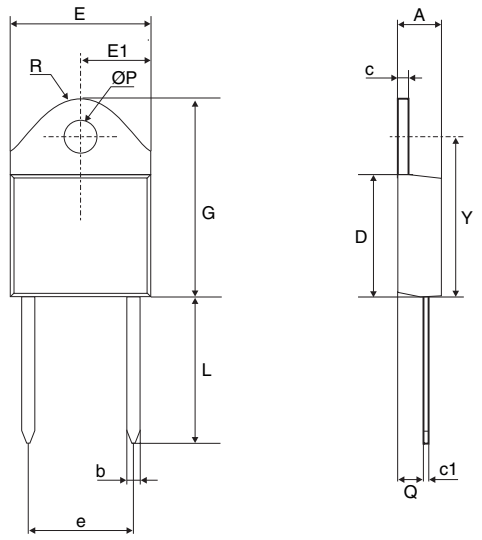

REF.	DIMENSIONS			
	Millimeters		Inches	
	Min.	Max.	Min.	Max.
A	4.40	4.60	0.173	0.181
b	1.20	1.40	0.047	0.055
c	1.45	1.55	0.057	0.061
c1	0.50	0.70	0.020	0.028
D	12.15	13.10	0.474	0.516
E	15.10	15.50	0.594	0.610
E1	7.55	7.75	0.297	0.305
e	10.80	11.30	0.425	0.445
G	20.4	21.10	0.815	0.831
L	14.35	15.60	0.565	0.614
P	4.08	4.17	0.161	0.164
Q	2.70	2.90	0.106	0.114
R	4.60 typ.		0.181 typ.	
Y	15.80	16.50	0.622	0.650

In order to meet environmental requirements, ST offers these devices in ECOPACK® packages. These packages have a Lead-free second level interconnect . The category of second level interconnect is marked on the package and on the inner box label, in compliance with JEDEC Standard JESD97. The maximum ratings related to soldering conditions are also marked on the inner box label. ECOPACK is an ST trademark. ECOPACK specifications are available at: www.st.com.

3 Ordering information

Part Number	Marking	Package	Weight	Base qty	Delivery mode
STTH3010D	STTH3010D	TO-220AC	1.86 g	50	Tube
STTH3010PI	STTH3010PI	DOP3I	4.46 g	30	Tube
STTH3010W	STTH3010W	DO-247	4.4 g	30	Tube

4 Revision history

Date	Revision	Description of Changes
02-Mar-2006	1	First issue.

Please Read Carefully:

Information in this document is provided solely in connection with ST products. STMicroelectronics NV and its subsidiaries (“ST”) reserve the right to make changes, corrections, modifications or improvements, to this document, and the products and services described herein at any time, without notice.

All ST products are sold pursuant to ST’s terms and conditions of sale.

Purchasers are solely responsible for the choice, selection and use of the ST products and services described herein, and ST assumes no liability whatsoever relating to the choice, selection or use of the ST products and services described herein.

No license, express or implied, by estoppel or otherwise, to any intellectual property rights is granted under this document. If any part of this document refers to any third party products or services it shall not be deemed a license grant by ST for the use of such third party products or services, or any intellectual property contained therein or considered as a warranty covering the use in any manner whatsoever of such third party products or services or any intellectual property contained therein.

UNLESS OTHERWISE SET FORTH IN ST’S TERMS AND CONDITIONS OF SALE ST DISCLAIMS ANY EXPRESS OR IMPLIED WARRANTY WITH RESPECT TO THE USE AND/OR SALE OF ST PRODUCTS INCLUDING WITHOUT LIMITATION IMPLIED WARRANTIES OF MERCHANTABILITY, FITNESS FOR A PARTICULAR PURPOSE (AND THEIR EQUIVALENTS UNDER THE LAWS OF ANY JURISDICTION), OR INFRINGEMENT OF ANY PATENT, COPYRIGHT OR OTHER INTELLECTUAL PROPERTY RIGHT.

UNLESS EXPRESSLY APPROVED IN WRITING BY AN AUTHORIZE REPRESENTATIVE OF ST, ST PRODUCTS ARE NOT DESIGNED, AUTHORIZED OR WARRANTED FOR USE IN MILITARY, AIR CRAFT, SPACE, LIFE SAVING, OR LIFE SUSTAINING APPLICATIONS, NOR IN PRODUCTS OR SYSTEMS, WHERE FAILURE OR MALFUNCTION MAY RESULT IN PERSONAL INJURY, DEATH, OR SEVERE PROPERTY OR ENVIRONMENTAL DAMAGE.

Resale of ST products with provisions different from the statements and/or technical features set forth in this document shall immediately void any warranty granted by ST for the ST product or service described herein and shall not create or extend in any manner whatsoever, any liability of ST.

ST and the ST logo are trademarks or registered trademarks of ST in various countries.

Information in this document supersedes and replaces all information previously supplied.

The ST logo is a registered trademark of STMicroelectronics. All other names are the property of their respective owners.

© 2006 STMicroelectronics - All rights reserved

STMicroelectronics group of companies

Australia - Belgium - Brazil - Canada - China - Czech Republic - Finland - France - Germany - Hong Kong - India - Israel - Italy - Japan - Malaysia - Malta - Morocco - Singapore - Spain - Sweden - Switzerland - United Kingdom - United States of America

www.st.com