# STS5N15F3

## N-channel 150 V, 0.045 Ω, 5 A, SO-8 STripFET™ III Power MOSFET

## Features

| Type | $V_{DSS}$ | $R_{DS(on)}$ max | $I_D$ |
|---|---|---|---|
| STS5N15F3 | 150 V | < 0.057 Ω | 5 A |

- Low on-resistance
- Low input capacitance and gate charge
- Low gate input resistance

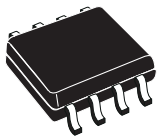

SO-8

## Application

- Switching applications

## Description

This product utilizes the latest advanced design rules of ST's proprietary STripFET™ technology which is suitable for the most demanding DC-DC converter applications where high efficiency is required.

**Figure 1. Internal schematic diagram**

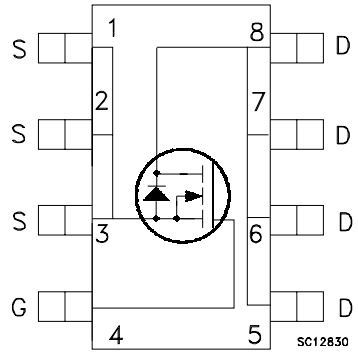


Obsolete Product(s) - Obsolete Product(s)

**Table 1. Device summary**

| Order code | Marking | Package | Packaging |
|---|---|---|---|
| STS5N15F3 | 5F15- | SO-8 | Tape and reel |

# Contents

1 Electrical ratings . . . . . 3

2 Electrical characteristics . . . . . 4

2.1 Electrical characteristics (curves) . . . . . 6

3 Test circuit . . . . . 8

4 Package mechanical data . . . . . 9

5 Revision history . . . . . 11

Obsolete Product(s) - Obsolete Product(s)

# 1 Electrical ratings

**Table 2. Absolute maximum ratings**

| Symbol | Parameter | Value | Unit |
|---|---|---|---|
| $V_{DS}$ | Drain-source voltage ($V_{GS}$ = 0) | 150 | V |
| $V_{GS}$ | Gate-source voltage | ± 20 | V |
| $I_D$ | Drain current (continuous) at $T_C$ = 25 °C | 5 | A |
| $I_D$ | Drain current (continuous) at $T_C$=100 °C | 3.2 | A |
| $I_{DM}$ (1) | Drain current (pulsed) | 20 | A |
| $P_{TOT}$ | Total dissipation at $T_C$ = 25 °C | 2.5 | W |
| $T_{stg}$ | Storage temperature | -55 to 150 | °C |
| $T_j$ | Operating junction temperature | | |

1. Pulse width limited by safe operating area

**Table 3. Thermal data**

| Symbol | Parameter | Value | Unit |
|---|---|---|---|
| $R_{thj\text{-}pcb}$ (1) | Thermal resistance junction-pcb max | 50 | °C/W |

1. When mounted on FR-4 board of 1 inch², 2 oz Cu, t < 10 sec

**Table 4. Avalanche characteristics**

| Symbol | Parameter | Max value | Unit |
|---|---|---|---|
| $I_{AS}$ | Avalanche current, repetitive or not-repetitive (pulse width limited by $T_j$ max) | 2.5 | A |
| $E_{AS}$ | Single pulse avalanche energy (starting $T_j$ = 25 °C, $I_D$ = $I_{AS}$, $V_{DD}$ = 140 V) | 300 | mJ |

Obsolete Product(s) - Obsolete Product(s)

# 2 Electrical characteristics

($T_J$ = 25 °C unless otherwise specified).

**Table 5. On/off states**

| Symbol | Parameter | Test conditions | Min. | Typ. | Max. | Unit |
|---|---|---|---|---|---|---|
| $V_{(BR)DSS}$ | Drain-source breakdown voltage | $I_D$ = 1 mA, $V_{GS}$= 0 | 150 | | | V |
| $I_{DSS}$ | Zero gate voltage drain current ($V_{GS}$ = 0) | $V_{DS}$ = 150 V,<br>$V_{DS}$ = 150 V, @125 °C | | | 1<br>10 | µA<br>µA |
| $I_{GSS}$ | Gate body leakage current ($V_{DS}$ = 0) | $V_{GS}$ = ±20 V | | | ±100 | nA |
| $V_{GS(th)}$ | Gate threshold voltage | $V_{DS}$= $V_{GS}$, $I_D$ = 250 µA | 2 | | 4 | V |
| $R_{DS(on)}$ | Static drain-source on resistance | $V_{GS}$= 10 V, $I_D$= 2.5 A | | 0.045 | 0.057 | Ω |

**Table 6. Dynamic**

| Symbol | Parameter | Test conditions | Min. | Typ. | Max. | Unit |
|---|---|---|---|---|---|---|
| $C_{iss}$<br>$C_{oss}$<br>$C_{rss}$ | Input capacitance<br>Output capacitance<br>Reverse transfer capacitance | $V_{DS}$ =25 V, f = 1 MHz,<br>$V_{GS}$ = 0 | - | 1300<br>140<br>20.5 | - | pF<br>pF<br>pF |
| $Q_g$<br>$Q_{gs}$<br>$Q_{gd}$ | Total gate charge<br>Gate-source charge<br>Gate-drain charge | $V_{DD}$ = 75 V, $I_D$ = 5 A<br>$V_{GS}$ =10 V<br>*Figure 14 on page 8* | - | 29<br>3.6<br>14.6 | - | nC<br>nC<br>nC |
| $R_g$ | Gate input resistance | f=1 MHz Gate DC Bias=0<br>Test signal level=20 mV<br>open drain | - | 3.7 | - | Ω |

**Table 7. Switching times**

| Symbol | Parameter | Test conditions | Min. | Typ. | Max. | Unit |
|---|---|---|---|---|---|---|
| $t_{d(on)}$<br>$t_r$<br>$t_{d(off)}$<br>$t_f$ | Turn-on delay time<br>Rise time<br>Turn-off delay time<br>Fall time | $V_{DD}$= 75 V, $I_D$= 2.5 A,<br>$R_G$=4.7 Ω, $V_{GS}$=10 V<br>*Figure 13 on page 8* | - | 9<br>13<br>46<br>20 | - | ns<br>ns<br>ns<br>ns |

Obsolete Product(s) - Obsolete Product(s)

**Table 8. Source drain diode**

| Symbol | Parameter | Test conditions | Min. | Typ. | Max | Unit |
|---|---|---|---|---|---|---|
| $I_{SD}$ | Source-drain current | | - | | 5 | A |
| $I_{SDM}$(1) | Source-drain current (pulsed) | | - | | 20 | A |
| $V_{SD}$(2) | Forward on voltage | $I_{SD}$ = 5 A, $V_{GS}$ = 0 | - | | 1.3 | V |
| $t_{rr}$<br>$Q_{rr}$<br>$I_{RRM}$ | Reverse recovery time<br>Reverse recovery charge<br>Reverse recovery current | $I_{SD}$ = 5 A,<br>di/dt = 100 A/µs,<br>$V_R$ = 40 V, $T_J$ = 150 °C<br>*Figure 15 on page 8* | - | 110<br>498<br>9.1 | | ns<br>nC<br>A |

1. Pulse width limited by safe operating area.
2. Pulsed: pulse duration=300µs, duty cycle 1.5%

Obsolete Product(s) - Obsolete Product(s)

## 2.1 Electrical characteristics (curves)

**Figure 2. Safe operating area**

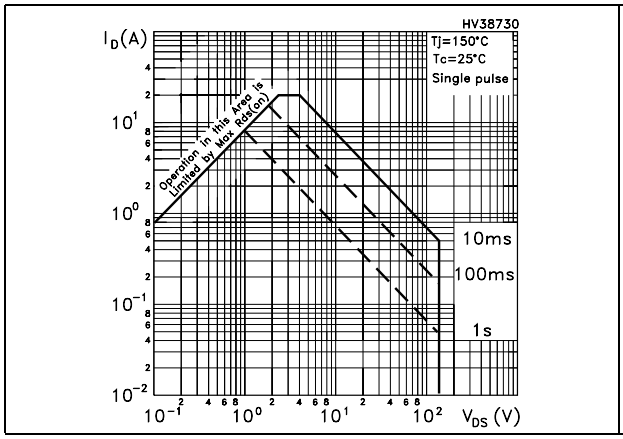


**Figure 3. Thermal impedance**

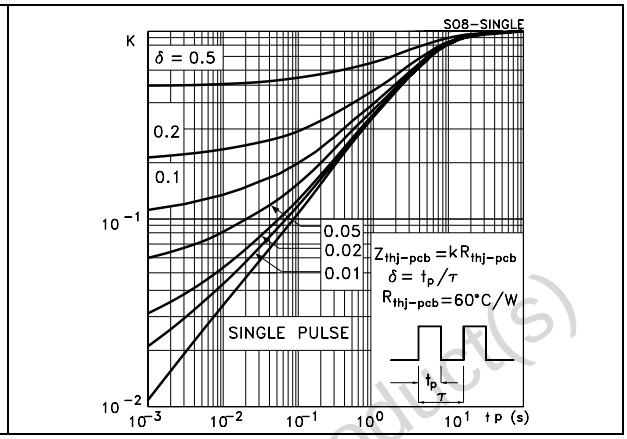


**Figure 4. Output characteristics**

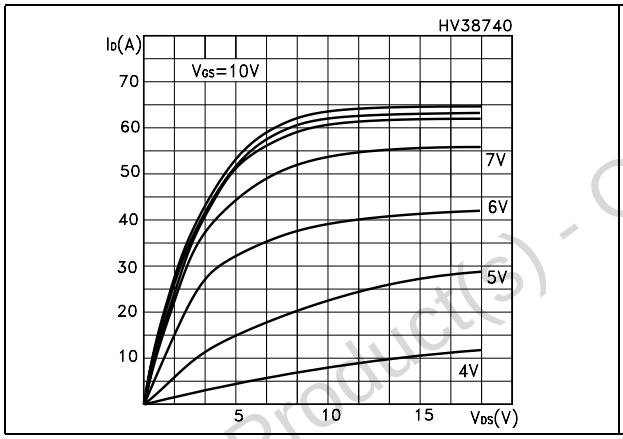


**Figure 5. Transfer characteristics**

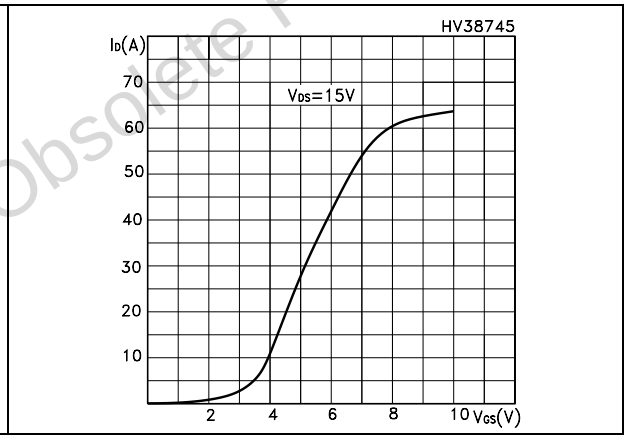


**Figure 6. Normalized $BV_{DSS}$ vs temperature**

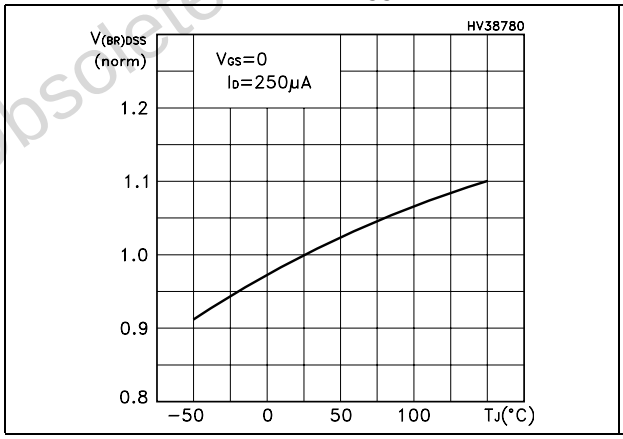


**Figure 7. Static drain-source on resistance**

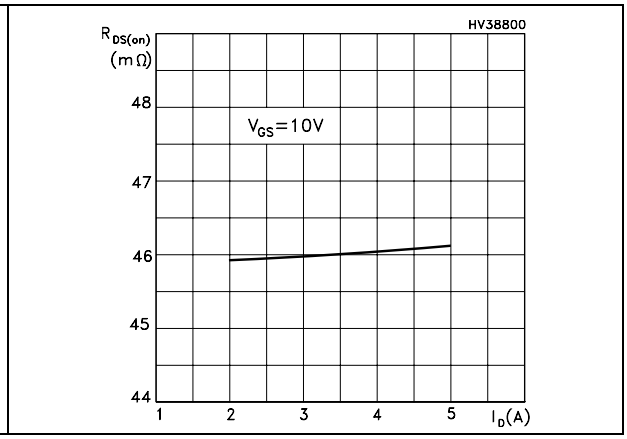


Obsolete Product(s) - Obsolete Product(s)

**Figure 8. Capacitance variations**

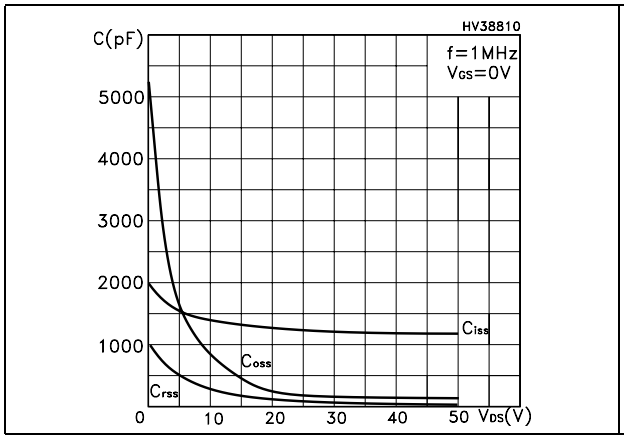


**Figure 9. Gate charge vs gate-source voltage**

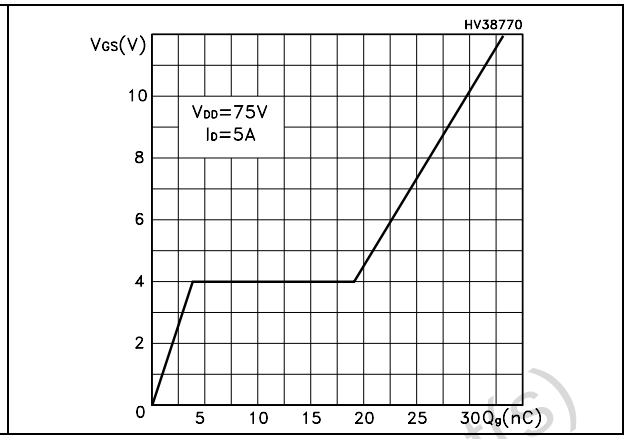


**Figure 10. Normalized gate threshold voltage vs temperature**

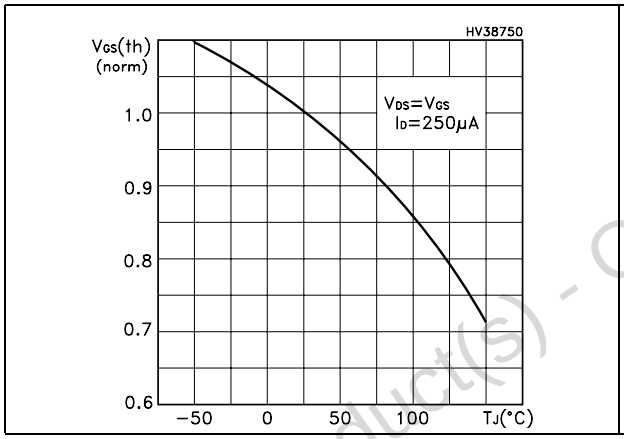


**Figure 11. Normalized on resistance vs temperature**

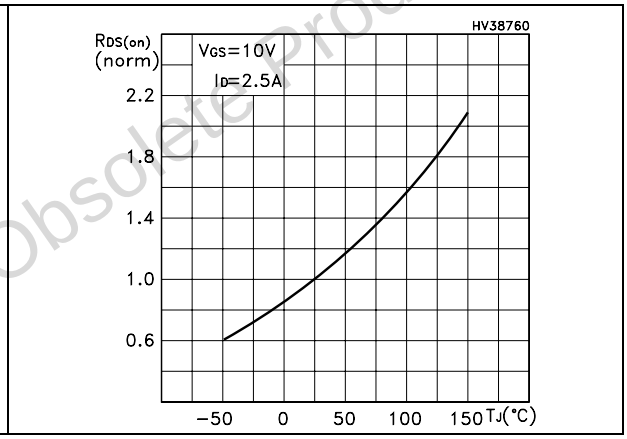


**Figure 12. Source-drain diode forward characteristics**

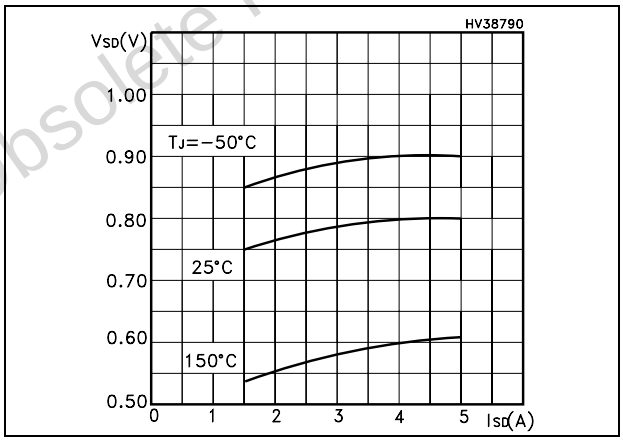


Obsolete Product(s) - Obsolete Product(s)

# 3 Test circuit

**Figure 13. Switching times test circuit for resistive load**

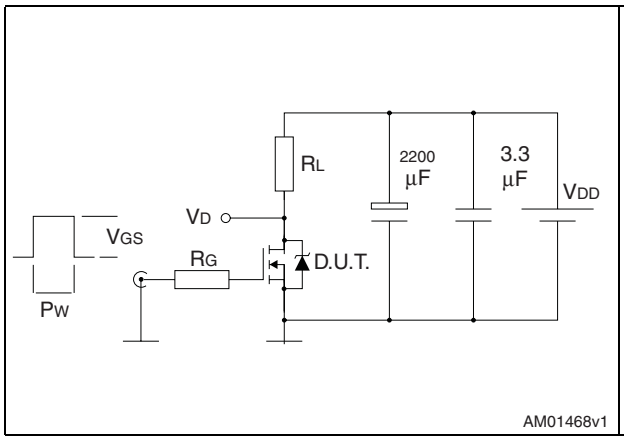


**Figure 14. Gate charge test circuit**

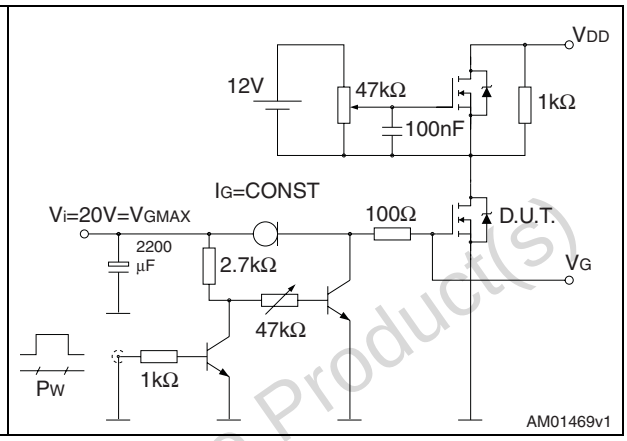


**Figure 15. Test circuit for inductive load switching and diode recovery times**

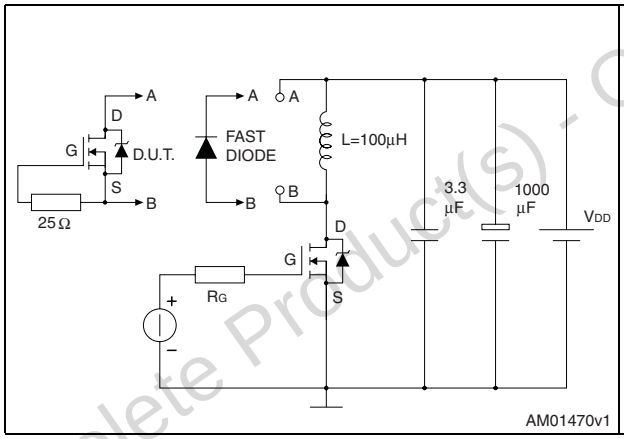


**Figure 16. Unclamped inductive load test circuit**

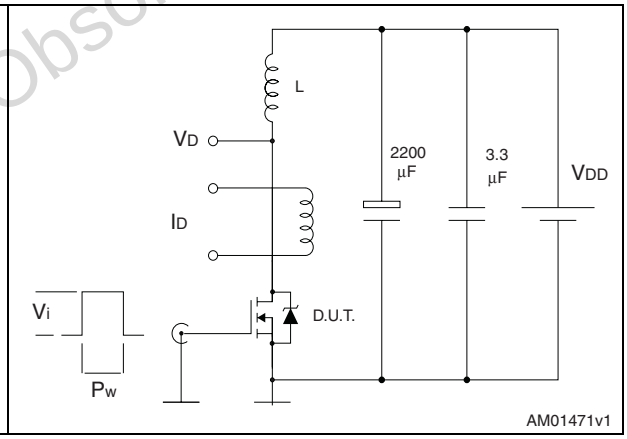


**Figure 17. Unclamped inductive waveform**

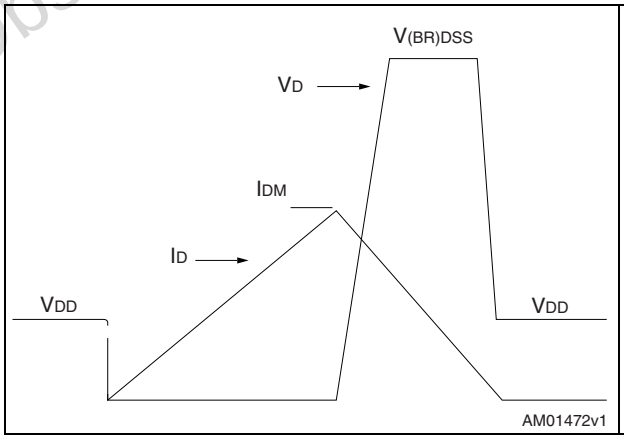


**Figure 18. Switching time waveform**

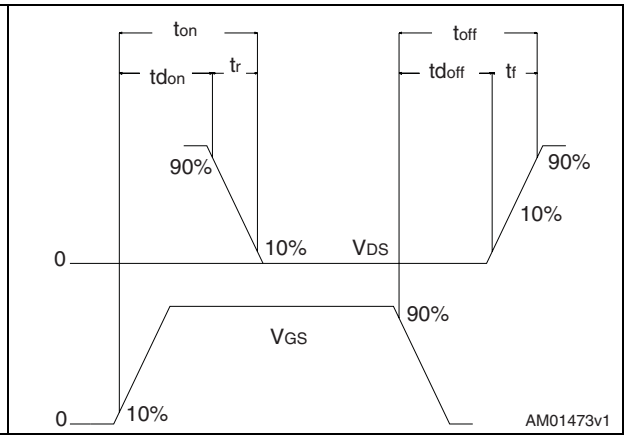


Obsolete Product(s) - Obsolete Product(s)

# 4 Package mechanical data

In order to meet environmental requirements, ST offers these devices in different grades of ECOPACK® packages, depending on their level of environmental compliance. ECOPACK® specifications, grade definitions and product status are available at: www.st.com. ECOPACK is an ST trademark.

Obsolete Product(s) - Obsolete Product(s)

## SO-8 MECHANICAL DATA

| DIM. | mm. | | | inch | | |
|---|---|---|---|---|---|---|
| | MIN. | TYP | MAX. | MIN. | TYP. | MAX. |
| A | | | 1.75 | | | 0.068 |
| a1 | 0.1 | | 0.25 | 0.003 | | 0.009 |
| a2 | | | 1.65 | | | 0.064 |
| a3 | 0.65 | | 0.85 | 0.025 | | 0.033 |
| b | 0.35 | | 0.48 | 0.013 | | 0.018 |
| b1 | 0.19 | | 0.25 | 0.007 | | 0.010 |
| C | 0.25 | | 0.5 | 0.010 | | 0.019 |
| c1 | 45 (typ.) | | | | | |
| D | 4.8 | | 5.0 | 0.188 | | 0.196 |
| E | 5.8 | | 6.2 | 0.228 | | 0.244 |
| e | | 1.27 | | | 0.050 | |
| e3 | | 3.81 | | | 0.150 | |
| F | 3.8 | | 4.0 | 0.14 | | 0.157 |
| L | 0.4 | | 1.27 | 0.015 | | 0.050 |
| M | | | 0.6 | | | 0.023 |
| S | 8 (max.) | | | | | |

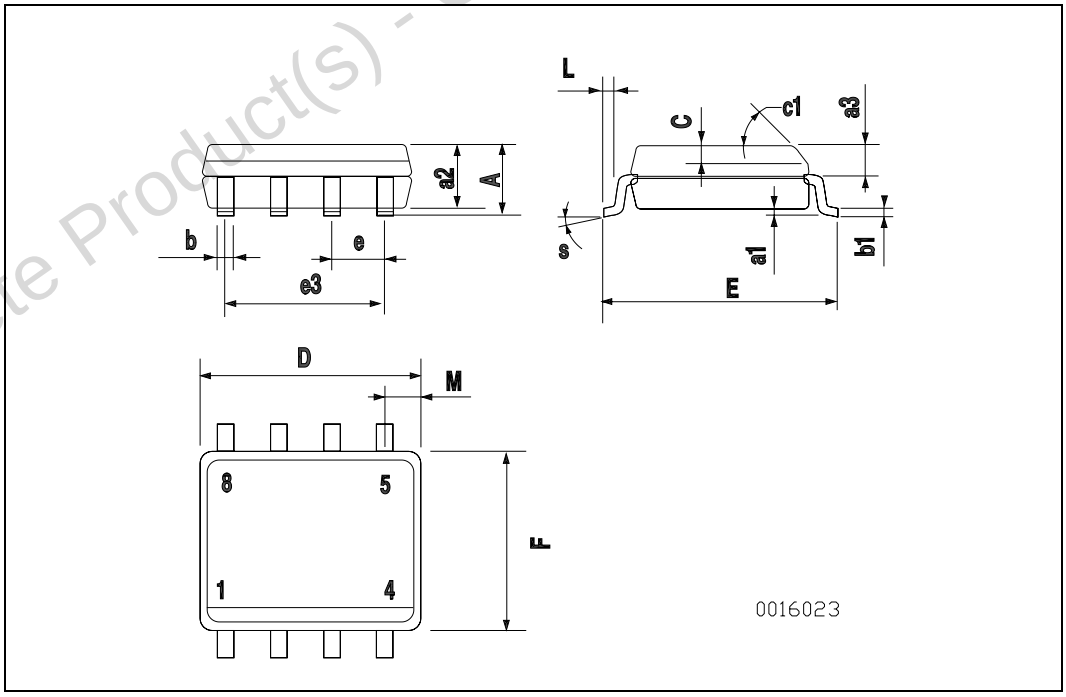


Obsolete Product(s) - Obsolete Product(s)

# 5 Revision history

Table 9. Document revision history

| Date | Revision | Changes |
|---|---|---|
| 03-Mar-2009 | 1 | First release |
| 23-Aug-2010 | 2 | Updated *Table 1: Device summary*. |

Obsolete Product(s) - Obsolete Product(s)

Obsolete Product(s) - Obsolete Product(s)

**Please Read Carefully:**

Information in this document is provided solely in connection with ST products. STMicroelectronics NV and its subsidiaries (“ST”) reserve the right to make changes, corrections, modifications or improvements, to this document, and the products and services described herein at any time, without notice.

All ST products are sold pursuant to ST’s terms and conditions of sale.

Purchasers are solely responsible for the choice, selection and use of the ST products and services described herein, and ST assumes no liability whatsoever relating to the choice, selection or use of the ST products and services described herein.

No license, express or implied, by estoppel or otherwise, to any intellectual property rights is granted under this document. If any part of this document refers to any third party products or services it shall not be deemed a license grant by ST for the use of such third party products or services, or any intellectual property contained therein or considered as a warranty covering the use in any manner whatsoever of such third party products or services or any intellectual property contained therein.

**UNLESS OTHERWISE SET FORTH IN ST’S TERMS AND CONDITIONS OF SALE ST DISCLAIMS ANY EXPRESS OR IMPLIED WARRANTY WITH RESPECT TO THE USE AND/OR SALE OF ST PRODUCTS INCLUDING WITHOUT LIMITATION IMPLIED WARRANTIES OF MERCHANTABILITY, FITNESS FOR A PARTICULAR PURPOSE (AND THEIR EQUIVALENTS UNDER THE LAWS OF ANY JURISDICTION), OR INFRINGEMENT OF ANY PATENT, COPYRIGHT OR OTHER INTELLECTUAL PROPERTY RIGHT.**

**UNLESS EXPRESSLY APPROVED IN WRITING BY AN AUTHORIZED ST REPRESENTATIVE, ST PRODUCTS ARE NOT RECOMMENDED, AUTHORIZED OR WARRANTED FOR USE IN MILITARY, AIR CRAFT, SPACE, LIFE SAVING, OR LIFE SUSTAINING APPLICATIONS, NOR IN PRODUCTS OR SYSTEMS WHERE FAILURE OR MALFUNCTION MAY RESULT IN PERSONAL INJURY, DEATH, OR SEVERE PROPERTY OR ENVIRONMENTAL DAMAGE. ST PRODUCTS WHICH ARE NOT SPECIFIED AS "AUTOMOTIVE GRADE" MAY ONLY BE USED IN AUTOMOTIVE APPLICATIONS AT USER’S OWN RISK.**

Resale of ST products with provisions different from the statements and/or technical features set forth in this document shall immediately void any warranty granted by ST for the ST product or service described herein and shall not create or extend in any manner whatsoever, any liability of ST.

ST and the ST logo are trademarks or registered trademarks of ST in various countries.

Information in this document supersedes and replaces all information previously supplied.

The ST logo is a registered trademark of STMicroelectronics. All other names are the property of their respective owners.

© 2010 STMicroelectronics - All rights reserved

STMicroelectronics group of companies

Australia - Belgium - Brazil - Canada - China - Czech Republic - Finland - France - Germany - Hong Kong - India - Israel - Italy - Japan - Malaysia - Malta - Morocco - Philippines - Singapore - Spain - Sweden - Switzerland - United Kingdom - United States of America

**www.st.com**