SamHop Microelectronics Corp.

STS3400

Sep.21 2004

N-Channel Enhancement Mode Field Effect Transistor

PRODUCT SUMMARY		
V_{DSS}	I_D	$R_{DS(ON)}$ (mΩ) Max
30V	3.5A	50 @ V_{GS} = 10V 70 @ V_{GS} =4.5V

FEATURES

- Super high dense cell design for low $R_{DS(ON)}$.
- Rugged and reliable.
- SOT-23 package.

SOT-23

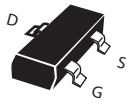

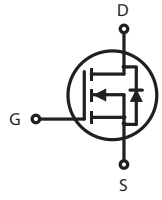

ABSOLUTE MAXIMUM RATINGS (T_A=25°C unless otherwise noted)

Parameter	Symbol	Limit	Unit
Drain-Source Voltage	V_{DS}	30	V
Gate-Source Voltage	V_{GS}	± 20	V
Drain Current-Continuous[a] @ T_J=25°C	I_D	3.5	A
-Pulsed[b]	I_{DM}	13	A
Drain-Source Diode Forward Current[a]	I_S	1.25	A
Maximum Power Dissipation[a]	P_D	1.25	W
Operating Junction and Storage Temperature Range	T_J, T_{STG}	-55 to 150	°C

THERMAL CHARACTERISTICS

Thermal Resistance, Junction-to-Ambient[a]	R_{thJA}	100	°C/W

STS3400

ELECTRICAL CHARACTERISTICS (T_A =25 °C unless otherwise noted)

Parameter	Symbol	Condition	Min	Typ [c]	Max	Unit
OFF CHARACTERISTICS						
Drain-Source Breakdown Voltage	BV_{DSS}	V_{GS}=0V, I_D=250uA	30			V
Zero Gate Voltage Drain Current	I_{DSS}	V_{DS}=24V, V_{GS}=0V			1	uA
Gate-Body Leakage	I_{GSS}	V_{GS}=± 20V, V_{DS}=0V			±100	nA
ON CHARACTERISTICS [b]						
Gate Threshold Voltage	$V_{GS(th)}$	V_{DS}=V_{GS}, I_D=250uA	1	1.7	2.5	V
Drain-Source On-State Resistance	$R_{DS(ON)}$	V_{GS}=10V, I_D=3.5A		40	50	m-ohm
		V_{GS}=4.5V, I_D=2A		55	70	m-ohm
On-State Drain Current	$I_{D(ON)}$	V_{DS}=5V, V_{GS}=10V	10			A
Forward Transconductance	g_{FS}	V_{DS}=5V, I_D=3.5A		6		S
DYNAMIC CHARACTERISTICS [c]						
Input Capacitance	C_{ISS}	V_{DS}=10V, V_{GS}=0V f=1.0MHz		600		pF
Output Capacitance	C_{OSS}			125		pF
Reverse Transfer Capacitance	C_{RSS}			95		pF
SWITCHING CHARACTERISTICS [c]						
Turn-On Delay Time	$t_{D(ON)}$	V_{DD}=10V, I_D=1A, V_{GS}=10V, R_L=10 ohm R_{GEN}=6 ohm		14.2		ns
Rise Time	t_r			4.8		ns
Turn-Off Delay Time	$t_{D(OFF)}$			19.6		ns
Fall Time	t_f			9.3		ns
Total Gate Charge	Q_g	V_{DS}=10V, I_D=3.5A, V_{GS}=4.5V		6.8		nC
Gate-Source Charge	Q_{gs}			3.1		nC
Gate-Drain Charge	Q_{gd}			1.95		nC

STS3400

ELECTRICAL CHARACTERISTICS (T_A=25°C unless otherwise noted)

Parameter	Symbol	Condition	Min	Typ[c]	Max	Unit
DRAIN-SOURCE DIODE CHARACTERISTICS [b]						
Diode Forward Voltage	V_{SD}	V_{GS} = 0V, Is =1.25A		0.82	1.2	V

Notes

a.Surface Mounted on FR4 Board, t≤10sec.
b.Pulse Test:Pulse Width≤300us, Duty Cycle≤ 2%.
c.Guaranteed by design, not subject to production testing.

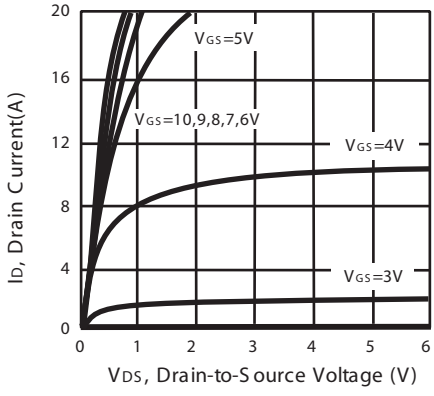

Figure 1. Output Characteristics

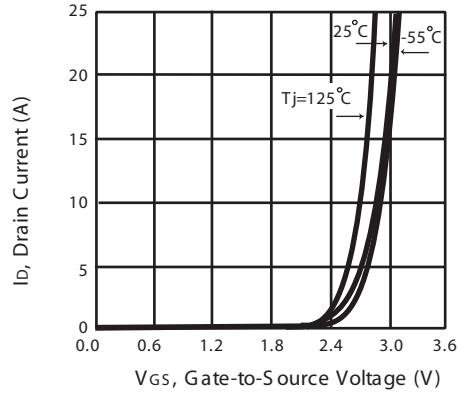

Figure 2. Transfer Characteristics

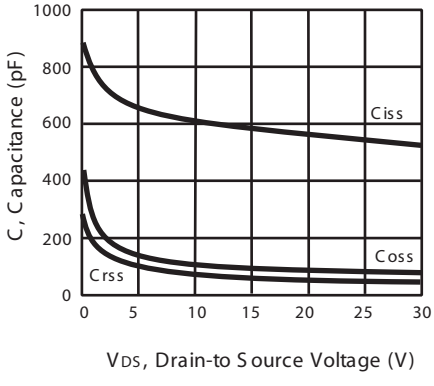

Figure 3. Capacitance

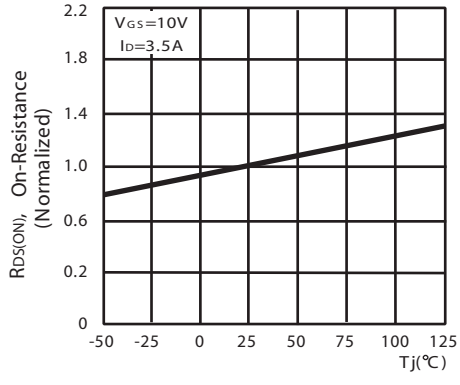

Figure 4. On-Resistance Variation with Temperature

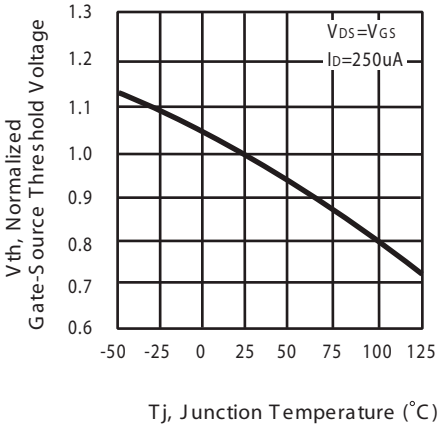

with Temperature

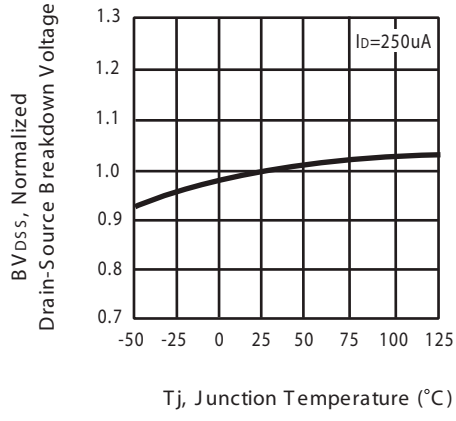

Figure 6. Breakdown Voltage Variation with Temperature

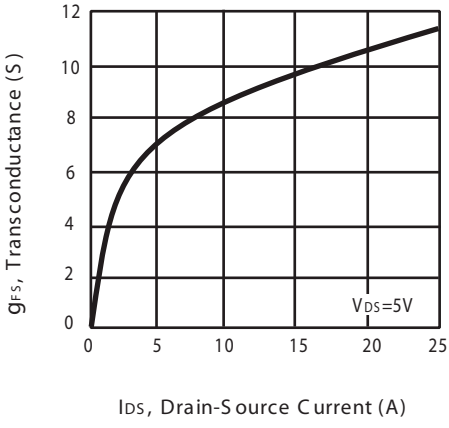

Figure 7. Transconductance Variation with Drain Current

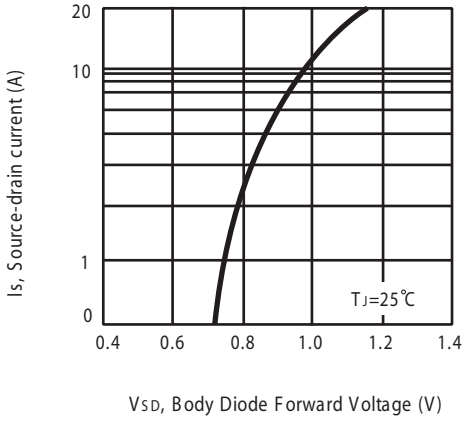

Figure 8. Body Diode Forward Voltage Variation with Source Current

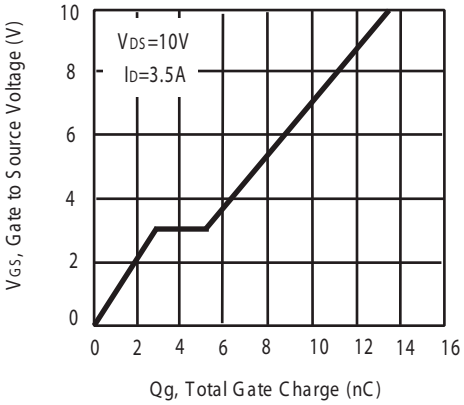

Figure 9. Gate Charge

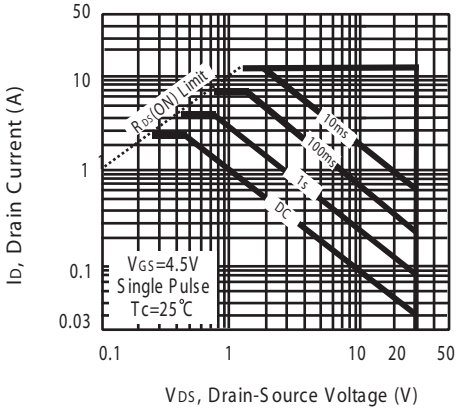

Figure 10. Maximum Safe Operating Area

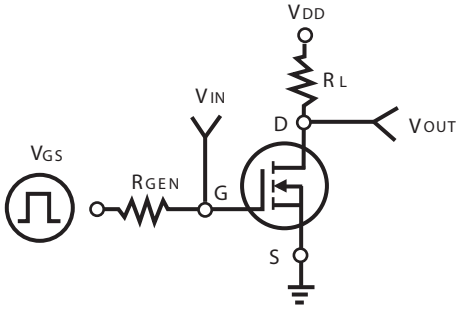

Figure 11. Switching Test Circuit

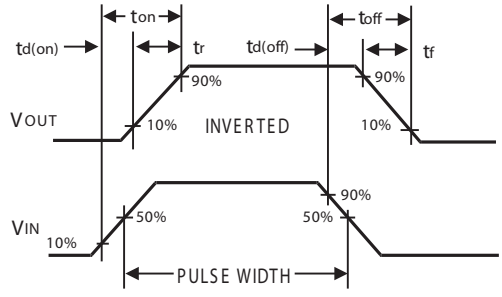

Figure 12. Switching Waveforms

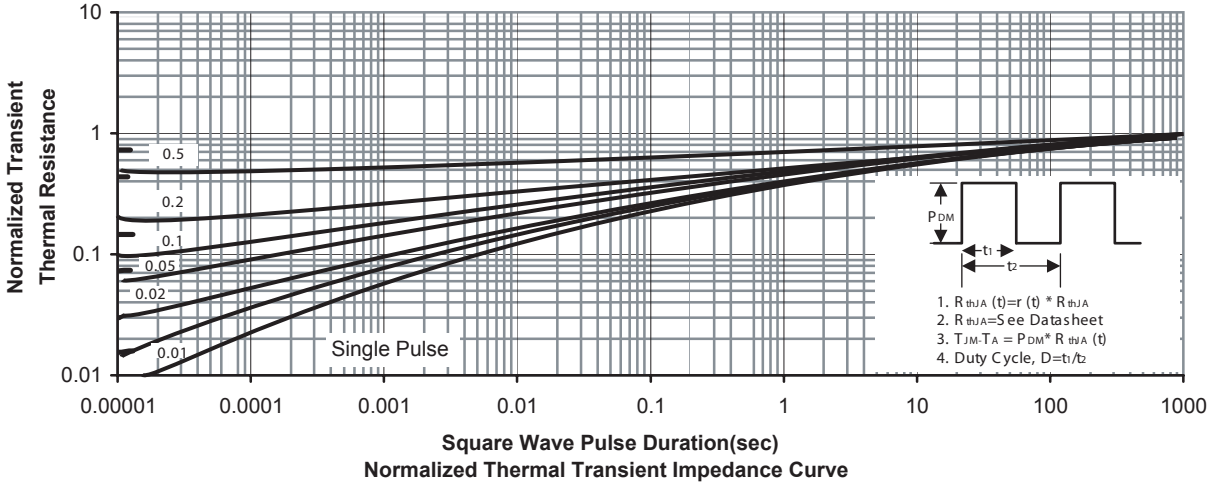

STS3400

PACKAGE OUTLINE DIMENSIONS

SOT-23

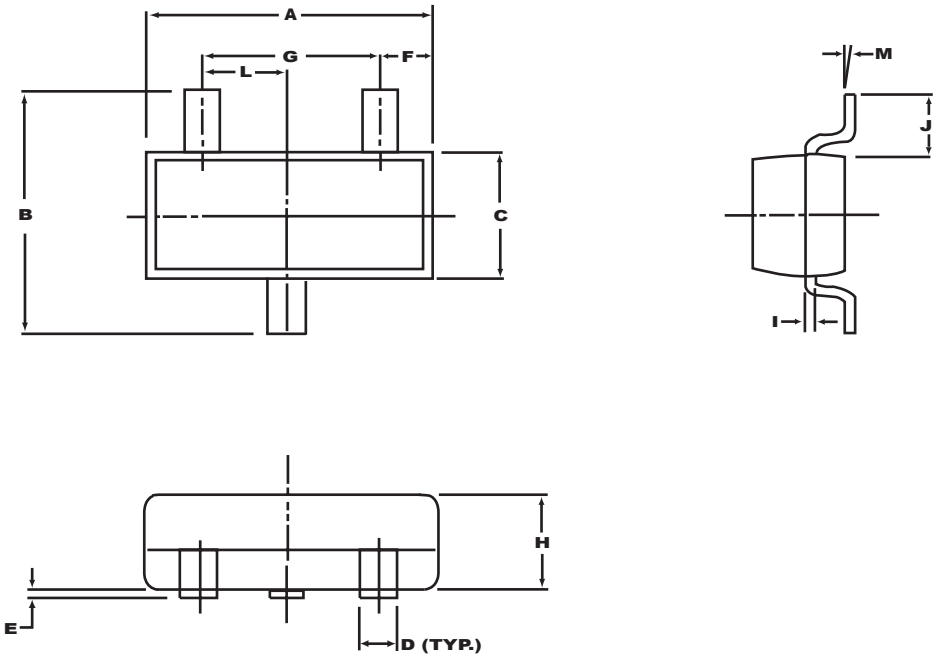

SYMBOLS	MILLIMETERS		INCHES	
	MIN	MAX	MIN	MAX
A	2.70	3.10	0.106	0.122
B	2.40	2.80	0.094	0.110
C	1.40	1.60	0.055	0.063
D	0.35	0.50	0.014	0.020
E	0	0.10	0	0.004
F	0.45	0.55	0.018	0.022
G	1.90 REF.		0.075 REF.	
H	1.00	1.30	0.039	0.051
I	0.10	0.20	0.004	0.008
J	0.40	-	0.016	-
L	0.45	1.15	0.033	0.045
M	0°	10°	0°	10°

STS3400

SOT-23 Tape and Reel Data

SOT-23 Carrier Tape

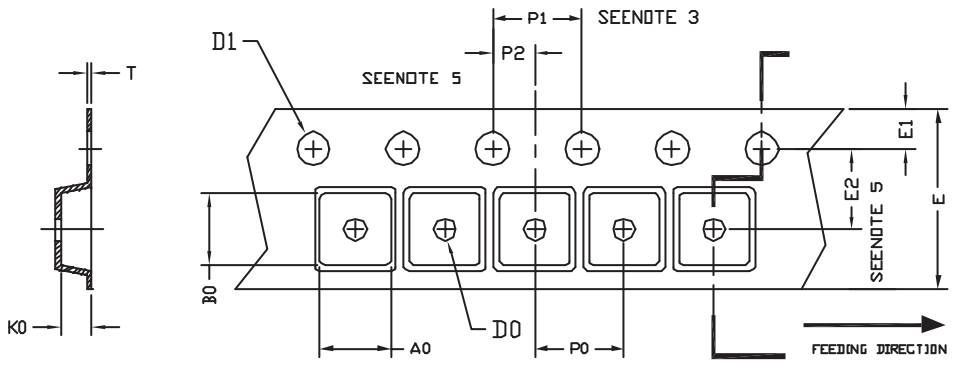

UNIT:㎜

PACKAGE	A0	B0	K0	D0	D1	E	E1	E2	P0	P1	P2	T
SOT-23	3.20 ±0.10	3.00 ±0.10	1.33 ±0.10	∮1.00 +0.25	∮1.50 +0.10	8.00 +0.30 -0.10	1.75 ±0.10	3.50 ±0.05	4.00 ±0.10	4.00 ±0.10	2.00 ±0.05	0.20 ±0.02

SOT-23 Reel

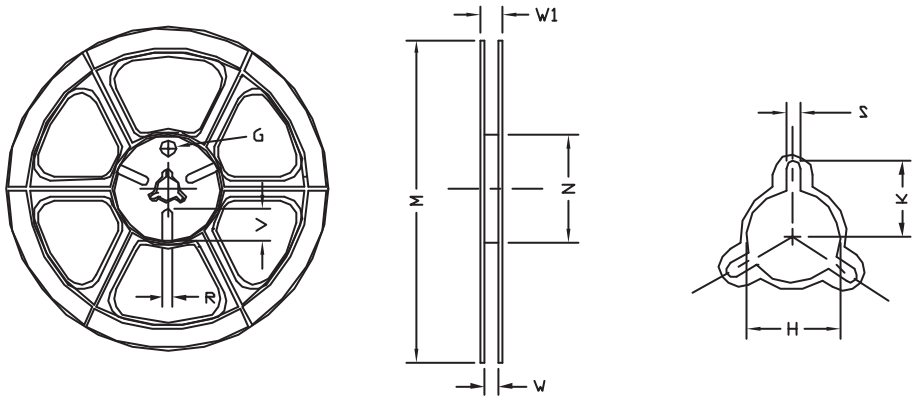

UNIT:㎜

TAPE SIZE	REEL SIZE	M	N	W	W1	H	K	S	G	R	V
8㎜	∮178	∮178 ±1	∮60 ±1	9.00 ±0.5	12.00 ±0.5	∮13.5 ±0.5	10.5	2.00 ±0.5	∮10.0	5.00	18.00