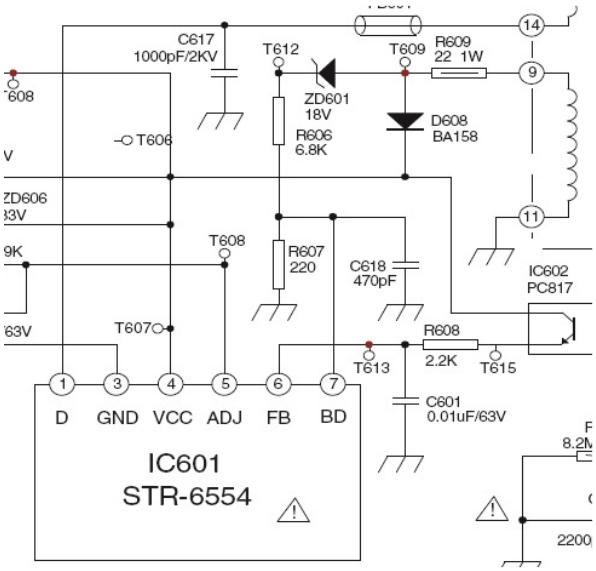

Block diagram

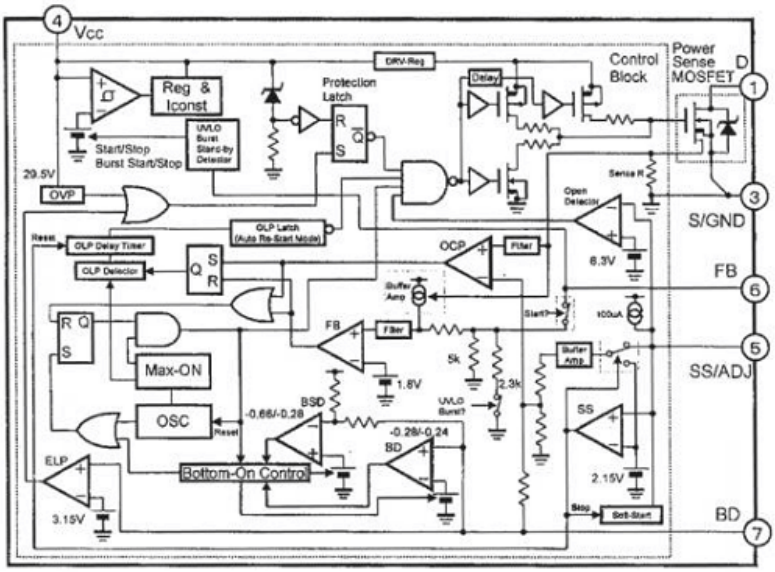

Functions of Each Terminal

Terminal No.	Symbols	Descriptions	Functions
1	D	Drain terminal	MOSFET drain
3	S/GND	Source and Ground terminal	MOSFET Source and Ground
4	VCC	Power supply terminal	Input of power supply for control circuit
5	SS/ADJ	Soft Start and Over-current protection adjustment Terminal	Adjustment of over-current protection and Soft Start Operation Time set up
6	FB	Feedback terminal	Constant Voltage Control Signal Input and Burst(intermittent) mode Oscillation Control
7	BD	Bottom Detection Terminal	Bottom Detection Signal Input and External Latch Signal Input