STD1NK60 - STD1NK60-1
STQ1HNK60R - STN1HNK60

N-CHANNEL 600V - 8Ω - 1A DPAK/TO-92/IPAK/SOT-223
SuperMESH™ MOSFET

Table 1: General Features

TYPE	V_{DSS}	$R_{DS(on)}$	I_D	Pw
STD1NK60	600 V	< 8.5 Ω	1 A	30 W
STD1NK60-1	600 V	< 8.5 Ω	1 A	30 W
STQ1HNK60R	600 V	< 8.5 Ω	0.4 A	3 W
STN1HNK60	600 V	< 8.5 Ω	0.4 A	3.3 W

- TYPICAL R_{DS}(on) = 8 Ω
- EXTREMELY HIGH dv/dt CAPABILITY
- ESD IMPROVED CAPABILITY
- 100% AVALANCHE TESTED
- NEW HIGH VOLTAGE BENCHMARK
- GATE CHARGE MINIMIZED

DESCRIPTION

The SuperMESH™ series is obtained through an extreme optimization of ST's well established strip-based PowerMESH™ layout. In addition to pushing on-resistance significantly down, special care is taken to ensure a very good dv/dt capability for the most demanding applications. Such series complements ST full range of high voltage MOSFETs including revolutionary MDmesh™ products.

APPLICATIONS

- LOW POWER BATTERY CHARGERS
- SWITH MODE LOW POWER SUPPLIES(SMPS)
- LOW POWER, BALLAST, CFL (COMPACT FLUORESCENT LAMPS)

Figure 1: Package

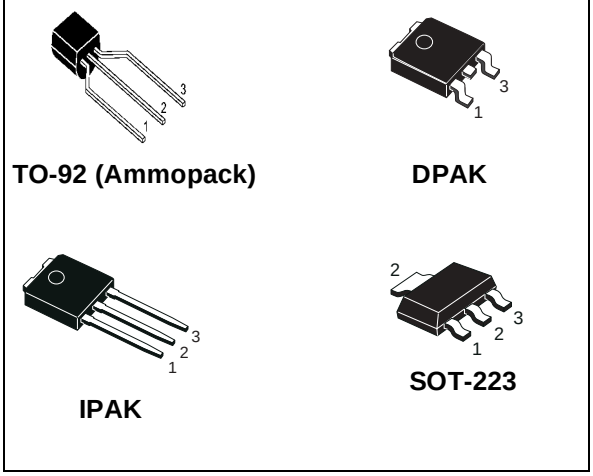

Figure 2: Internal Schematic Diagram

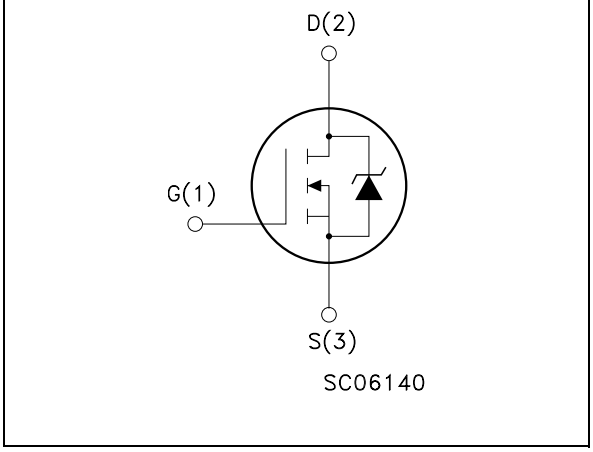

Table 2: Order Codes

Part Number	Marking	Package	Packaging
STD1NK60T4	D1NK60	DPAK	TAPE & REEL
STD1NK60-1	D1NK60	IPAK	TUBE
STQ1HNK60R	1HNK60R	TO-92	BULK
STQ1HNK60R-AP	1HNK60R	TO-92	AMMOPAK
STN1HNK60	N1HNK60	SOT-223	TAPE & REEL

Rev. 3

Table 3: Absolute Maximum ratings

Symbol	Parameter	Value			Unit
		DPAK / IPAK	TO-92	SOT-223	
V_{DS}	Drain-source Voltage (V_{GS} = 0)	600			V
V_{DGR}	Drain-gate Voltage (R_{GS} = 20 kΩ)	600			V
V_{GS}	Gate- source Voltage	± 30			V
I_D	Drain Current (continuous) at T_C = 25°C	1.0	0.4	0.4	A
I_D	Drain Current (continuous) at T_C = 100°C	0.63	0.25	0.25	A
I_{DM} (•)	Drain Current (pulsed)	4	1.6	1.6	A
P_{TOT}	Total Dissipation at T_C = 25°C	30	3	3.3	W
	Derating Factor	0.24	0.025	0.025	W/°C
dv/dt (1)	Peak Diode Recovery voltage slope	3			V/ns
T_j T_{stg}	Operating Junction Temperature Storage Temperature	-55 to 150			°C

(●) Pulse width limited by safe operating area
(1) I_{SD} ≤1.0A, di/dt ≤100A/µs, V_{DD} ≤ $V_{(BR)DSS}$, T_j ≤ $T_{JMAX.}$

Table 4: Thermal Data

		DPAK/IPAK	TO-92	SOT-223	Unit
Rthj-case	Thermal Resistance Junction-case Max	4.16	--	--	°C/W
Rthj-amb	Thermal Resistance Junction-ambient Max	100	120	37.87 (#)	°C/W
Rthj-lead	Thermal Resistance Junction-lead Max	--	40	--	°C/W
T_l	Maximum Lead Temperature For Soldering Purpose	275	260		°C

(#) When mounted on FR-4 board of 1 in^2 , 2oz Cu, t < 10 sec

Table 5: Avalanche Characteristics

Symbol	Parameter	Max Value	Unit
I_{AR}	Avalanche Current, Repetitive or Not-Repetitive (pulse width limited by T_j max)	1	A
E_{AS}	Single Pulse Avalanche Energy (starting T_j = 25 °C, I_D = I_{AR}, V_{DD} = 50 V)	25	mJ

ELECTRICAL CHARACTERISTICS (T_{CASE} =25°C UNLESS OTHERWISE SPECIFIED)

Table 6: On/Off

Symbol	Parameter	Test Conditions	Min.	Typ.	Max.	Unit
$V_{(BR)DSS}$	Drain-source Breakdown Voltage	I_D = 1mA, V_{GS} = 0	600			V
I_{DSS}	Zero Gate Voltage Drain Current (V_{GS} = 0)	V_{DS} = Max Rating V_{DS} = Max Rating, T_C = 125 °C			1 50	µA µA
I_{GSS}	Gate-body Leakage Current (V_{DS} = 0)	V_{GS} = ± 30V			±100	nA
$V_{GS(th)}$	Gate Threshold Voltage	V_{DS} = V_{GS}, I_D = 250 µA	2.25	3	3.7	V
$R_{DS(on)}$	Static Drain-source On Resistance	V_{GS} = 10V, I_D = 0.5 A		8	8.5	Ω

ELECTRICAL CHARACTERISTICS (CONTINUED)

Table 7: Dynamic

Symbol	Parameter	Test Conditions	Min.	Typ.	Max.	Unit
g_{fs} (1)	Forward Transconductance	V_{DS} = 15 V, I_D= 0.5 A		1		S
C_{iss} C_{oss} C_{rss}	Input Capacitance Output Capacitance Reverse Transfer Capacitance	V_{DS} = 25V, f = 1 MHz, V_{GS} = 0		156 23.5 3.8		pF pF pF
$t_{d(on)}$ t_r $t_{d(off)}$ t_r	Turn-on Delay Time Rise Time Turn-off Delay Time Fall Time	V_{DD} = 300 V, I_D = 0.5 A, R_G= 4.7 Ω, V_{GS} = 10 V (Resistive Load see, Figure 21)		6.5 5 19 25		ns ns ns ns
Q_g Q_{gs} Q_{gd}	Total Gate Charge Gate-Source Charge Gate-Drain Charge	V_{DD} = 480V, I_D = 1 A, V_{GS} = 10V, R_G= 4.7 Ω (see, Figure 23)		7 1.1 3.7	10	nC nC nC

Table 8: Source Drain Diode

Symbol	Parameter	Test Conditions	Min.	Typ.	Max.	Unit
I_{SD} I_{SDM} (2)	Source-drain Current Source-drain Current (pulsed)				1 4	A A
V_{SD} (1)	Forward On Voltage	I_{SD} = 1.0 A, V_{GS} = 0			1.6	V
t_{rr} Q_{rr} I_{RRM}	Reverse Recovery Time Reverse Recovery Charge Reverse Recovery Current	I_{SD} = 1.0 A, di/dt = 100 A/µs V_{DD} = 25V, T_j = 25°C (see test circuit, Figure 22)		140 240 3.3		ns µC A
t_{rr} Q_{rr} I_{RRM}	Reverse Recovery Time Reverse Recovery Charge Reverse Recovery Current	I_{SD} = 1.0 A, di/dt = 100 A/µs V_{DD} = 25V, T_j = 150°C (see test circuit, Figure 22)		229 377 3.3		ns µC A

(1) Pulsed: Pulse duration = 300 µs, duty cycle 1.5 %.
(2) Pulse width limited by safe operating area.

Figure 3: .Safe Operating Area For SOT-223

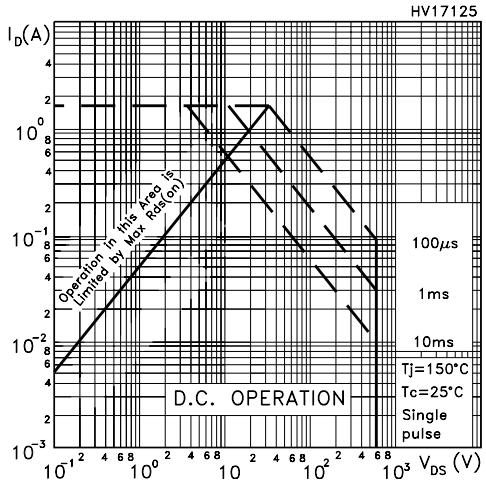

Figure 4: Safe Operating Area For DPAK/IPAK

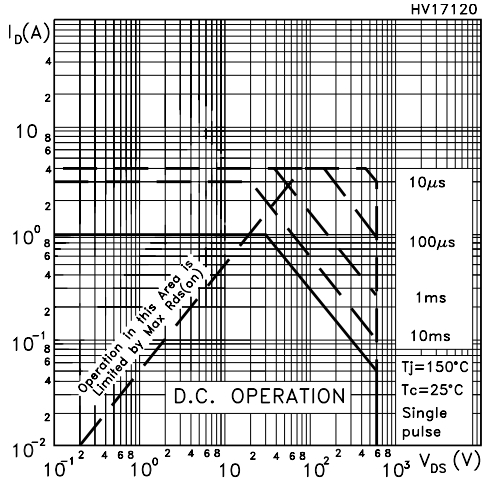

Figure 5: Safe Operating Area For TO-92

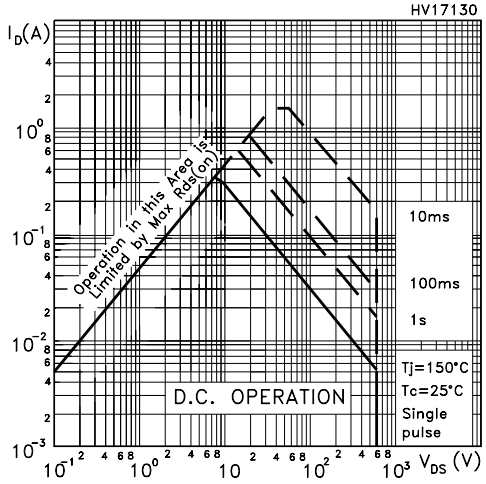

Figure 6: Thermal Impedance For SOT-223

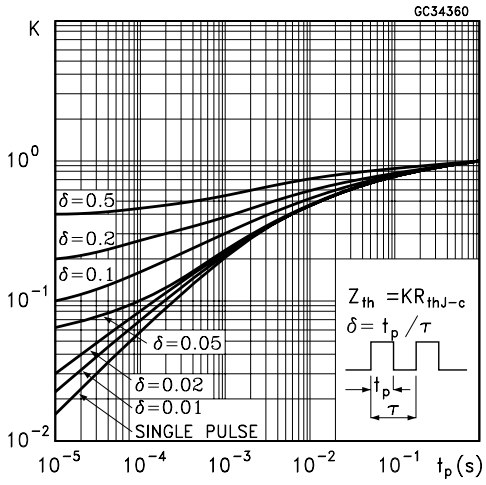

Figure 7: Thermal Impedance For DPAK/IPAK

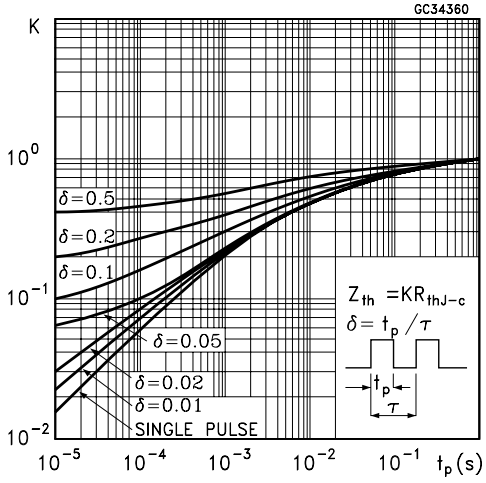

Figure 8: Thermal Impedance For TO-92

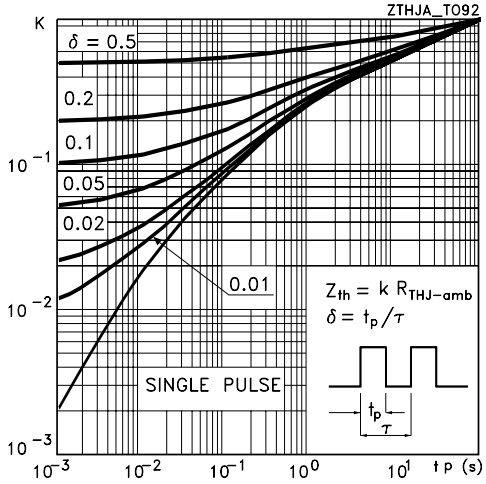

Figure 9: Output Characteristics

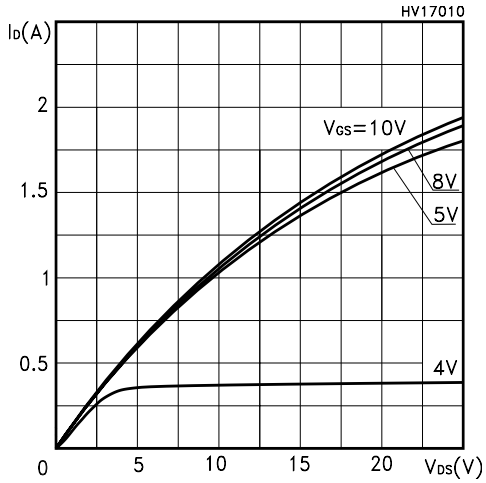

Figure 10: Transconductance

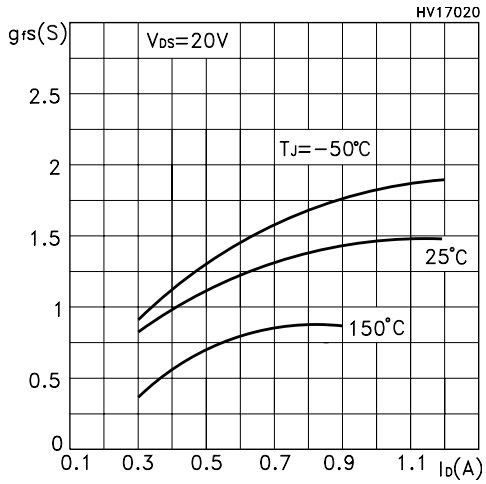

Figure 11: Capacitance Variations

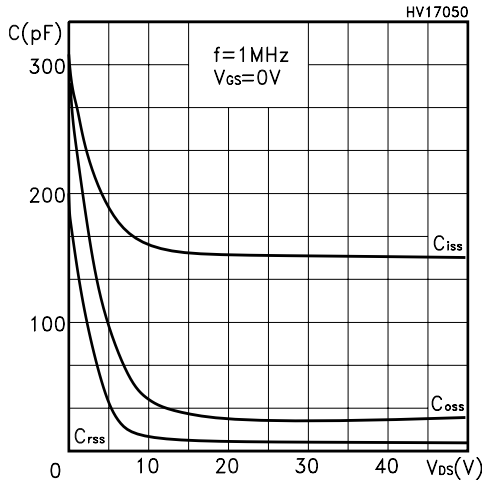

Figure 12: Transfer Characteristics

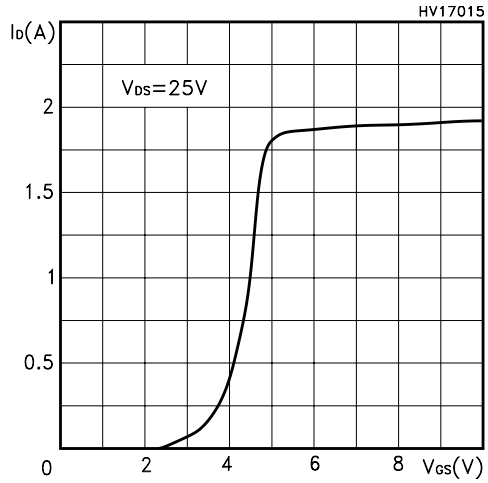

Figure 13: Gate Charge vs Gate-source Voltage

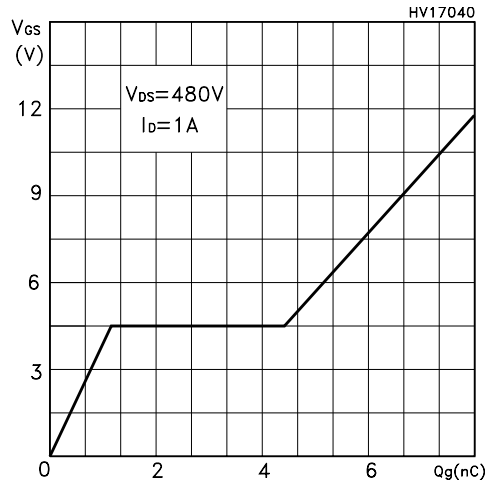

Figure 14: Static Drain-source On Resistance

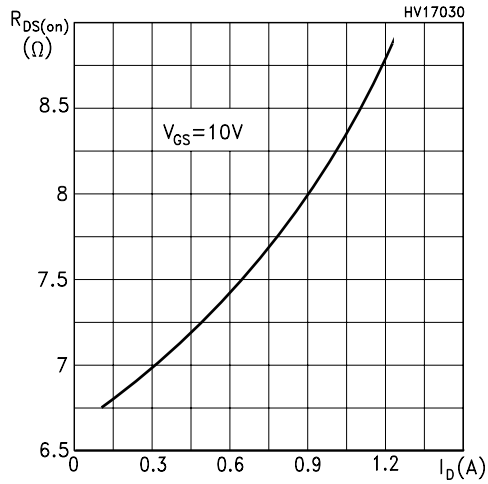

Figure 15: Normalized Gate Thereshold Voltage vs Temperature

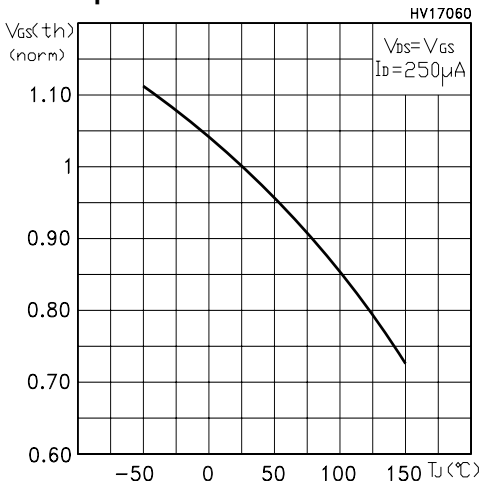

Figure 16: Source-Drain Forward Characteristics

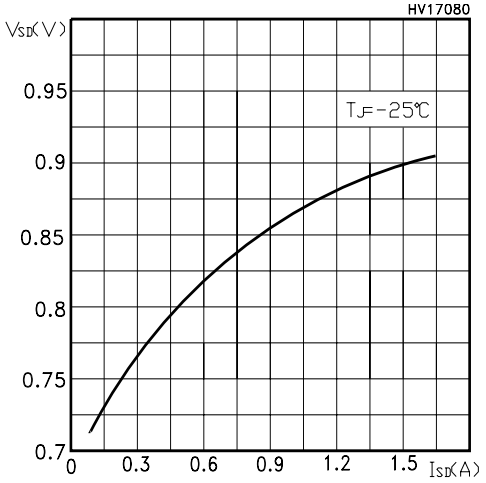

Figure 17: Maximum Avalanche Energy vs Temperature

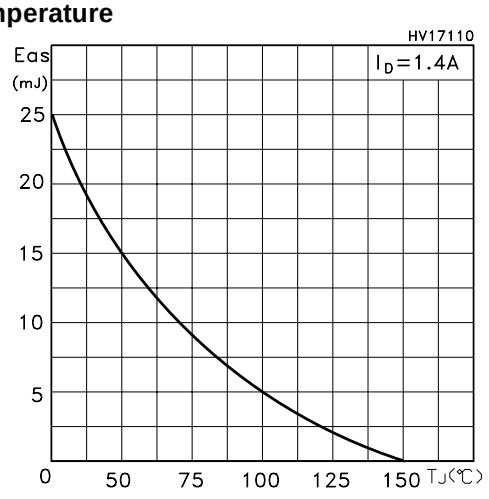

Figure 18: Normalized On Resistance vs Temperature

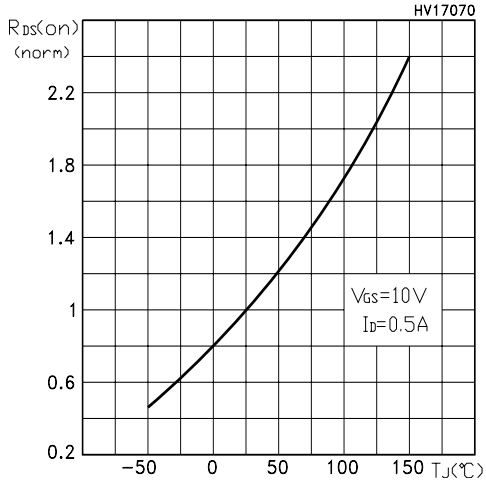

Figure 19: Normalized BV_{DSS} vs Temperature

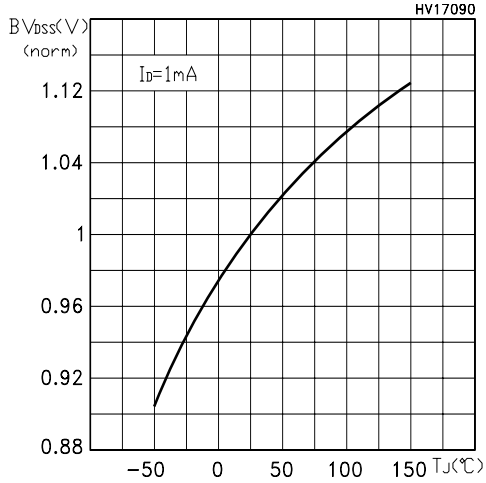

Figure 20: Max Id Current vs Tc

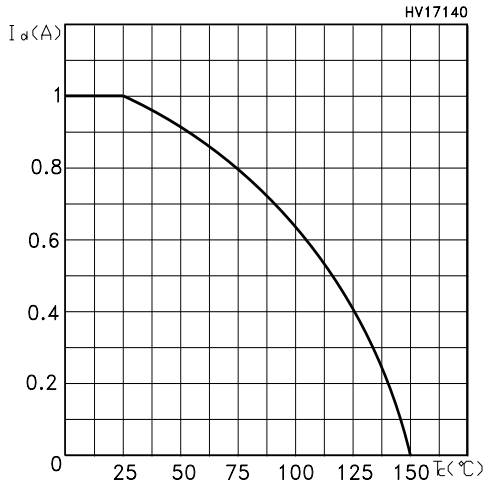

Figure 21: Switching Times Test Circuit For Resistive Load

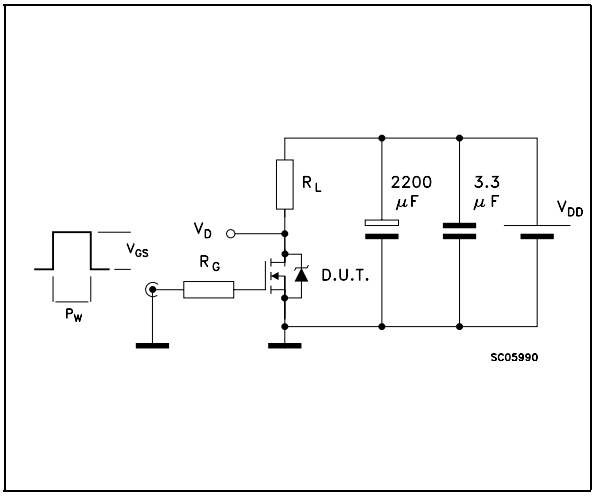

Figure 22: Test Circuit For Inductive Load Switching and Diode Recovery Times

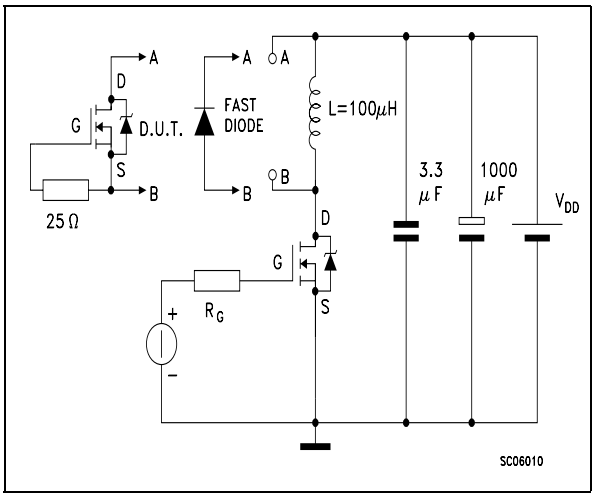

Figure 23: Gate Charge Test Circuit

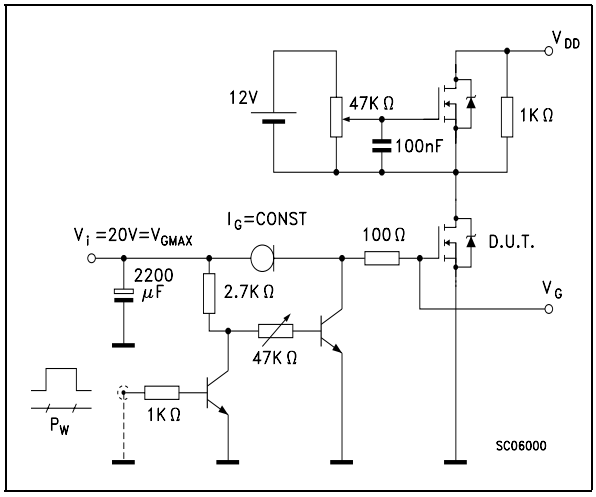

TO-92 MECHANICAL DATA

DIM.	mm.			inch		
	MIN.	TYP	MAX.	MIN.	TYP.	MAX.
A	4.32		4.95	0.170		0.194
b	0.36		0.51	0.014		0.020
D	4.45		4.95	0.175		0.194
E	3.30		3.94	0.130		0.155
e	2.41		2.67	0.094		0.105
e1	1.14		1.40	0.044		0.055
L	12.70		15.49	0.50		0.610
R	2.16		2.41	0.085		0.094
S1	0.92		1.52	0.036		0.060
W	0.41		0.56	0.016		0.022
V		5°			5°	

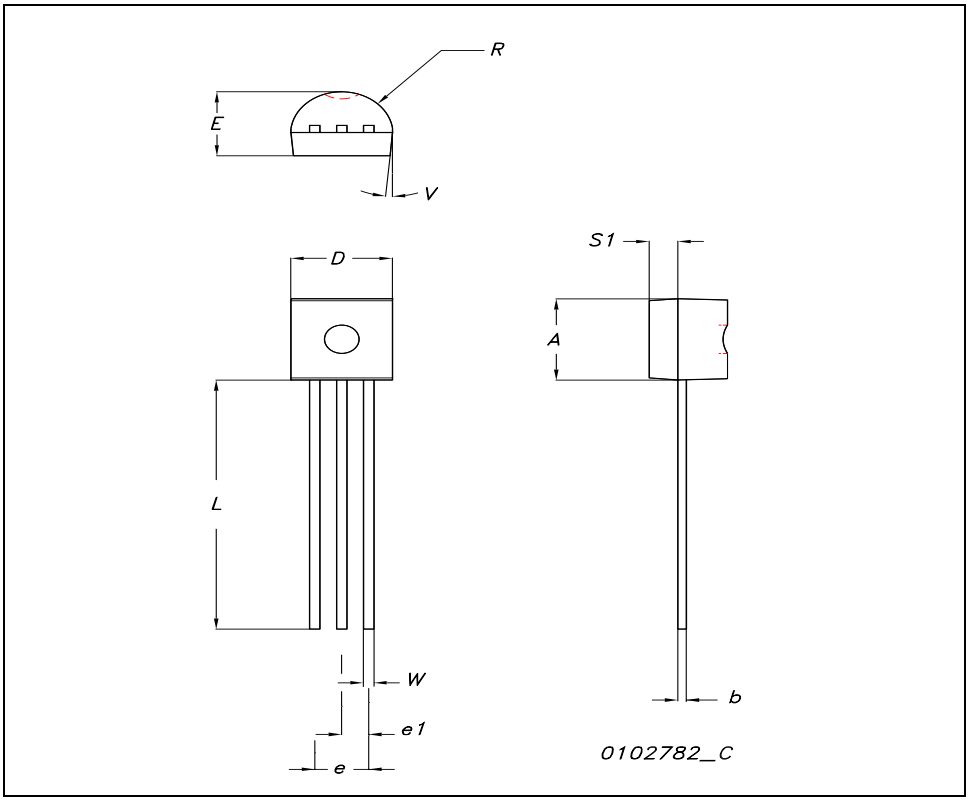

TO-92 AMMOPACK

DIM.	mm.			inch		
	MIN.	TYP	MAX.	MIN.	TYP.	MAX.
A1	4.45		4.95	0.170		0.194
T	3.30		3.94	0.130		0.155
T1			1.6			0.06
T2			2.3			0.09
d	0.41		0.56	0.016		0.022
P0	12.5	12.7	12.9	0.49	0.5	0.51
P2	5.65	6.35	7.05	0.22	0.25	0.27
F1, F2	2.44	2.54	2.94	0.09	0.1	0.11
delta H	-2		2	-0.08		0.08
W	17.5	18	19	0.69	0.71	0.74
W0	5.7	6	6.3	0.22	0.23	0.24
W1	8.5	9	9.25	0.33	0.35	0.36
W2			0.5			0.02
H	18.5		20.5	0.72		0.80
H0	15.5	16	16.5	0.61	0.63	0.65
H1			25			0.98
D0	3.8	4	4.2	0.15	0.157	0.16
t			0.9			0.035
L			11			0.43
l1	3			0.11		
delta P	-1		1	-0.04		0.04

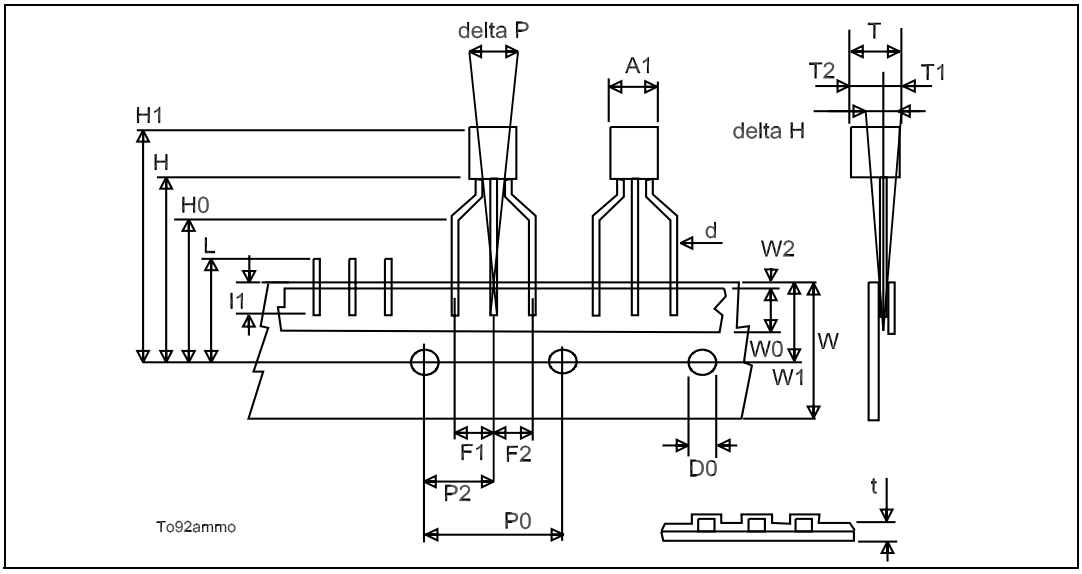

SOT-223 MECHANICAL DATA

DIM.	mm			inch		
	MIN.	TYP.	MAX.	MIN.	TYP.	MAX.
A			1.80			0.071
B	0.60	0.70	0.80	0.024	0.027	0.031
B1	2.90	3.00	3.10	0.114	0.118	0.122
c	0.24	0.26	0.32	0.009	0.010	0.013
D	6.30	6.50	6.70	0.248	0.256	0.264
e		2.30			0.090	
e1		4.60			0.181	
E	3.30	3.50	3.70	0.130	0.138	0.146
H	6.70	7.00	7.30	0.264	0.276	0.287
V			10°			10°
A1		0.02				

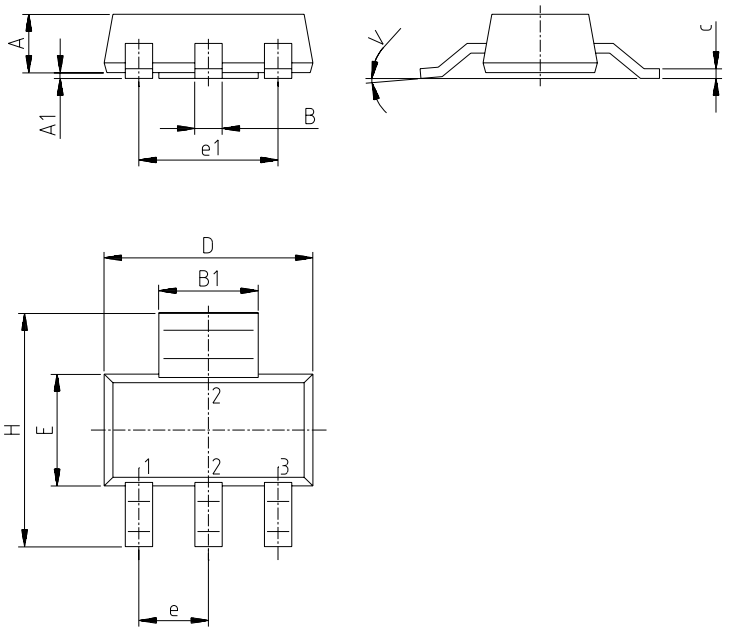

P008B

TO-252 (DPAK) MECHANICAL DATA

DIM.	mm			inch		
	MIN.	TYP.	MAX.	MIN.	TYP.	MAX.
A	2.20		2.40	0.087		0.094
A1	0.90		1.10	0.035		0.043
A2	0.03		0.23	0.001		0.009
B	0.64		0.90	0.025		0.035
B2	5.20		5.40	0.204		0.213
C	0.45		0.60	0.018		0.024
C2	0.48		0.60	0.019		0.024
D	6.00		6.20	0.236		0.244
E	6.40		6.60	0.252		0.260
G	4.40		4.60	0.173		0.181
H	9.35		10.10	0.368		0.398
L2		0.8			0.031	
L4	0.60		1.00	0.024		0.039
V2	0°		8°	0°		0°

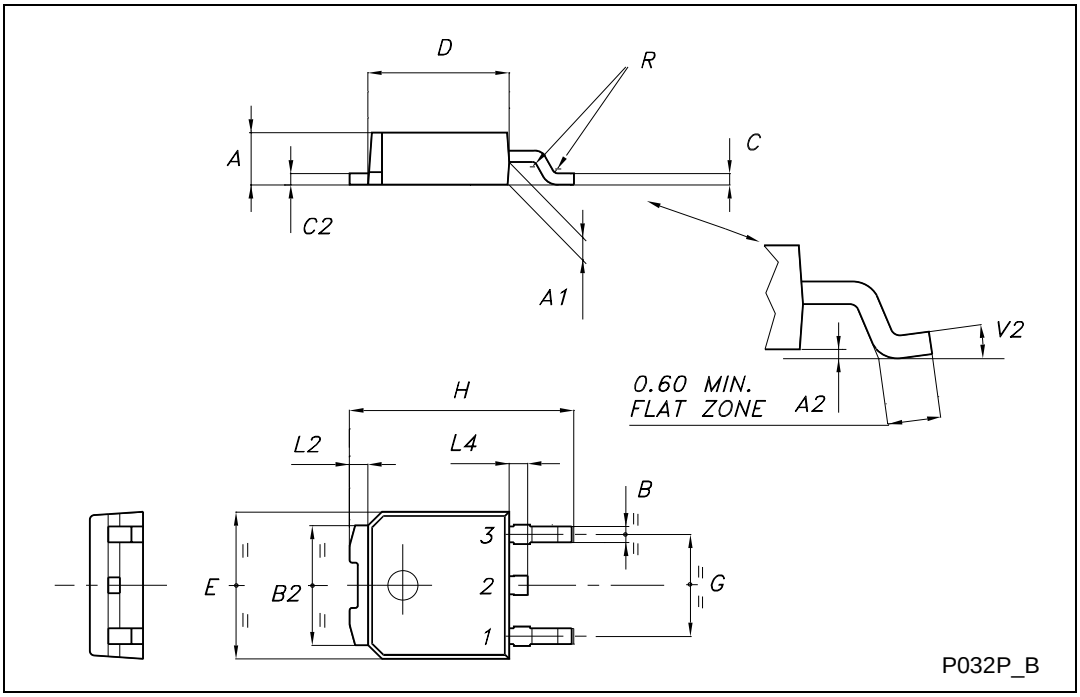

TO-251 (IPAK) MECHANICAL DATA

DIM.	mm			inch		
	MIN.	TYP.	MAX.	MIN.	TYP.	MAX.
A	2.2		2.4	0.086		0.094
A1	0.9		1.1	0.035		0.043
A3	0.7		1.3	0.027		0.051
B	0.64		0.9	0.025		0.031
B2	5.2		5.4	0.204		0.212
B3			0.85			0.033
B5		0.3			0.012	
B6			0.95			0.037
C	0.45		0.6	0.017		0.023
C2	0.48		0.6	0.019		0.023
D	6		6.2	0.236		0.244
E	6.4		6.6	0.252		0.260
G	4.4		4.6	0.173		0.181
H	15.9		16.3	0.626		0.641
L	9		9.4	0.354		0.370
L1	0.8		1.2	0.031		0.047
L2		0.8	1		0.031	0.039

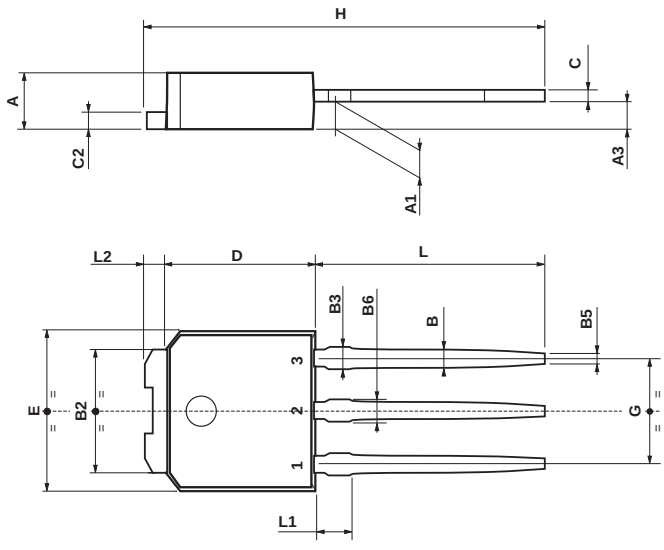

0068771-E

DPAK FOOTPRINT

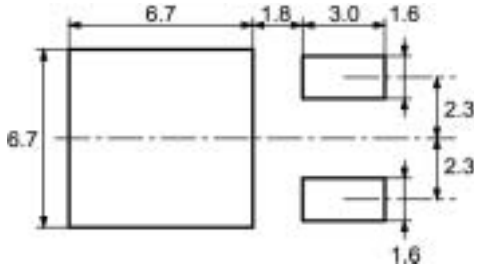

All dimensions are in millimeters

TAPE AND REEL SHIPMENT

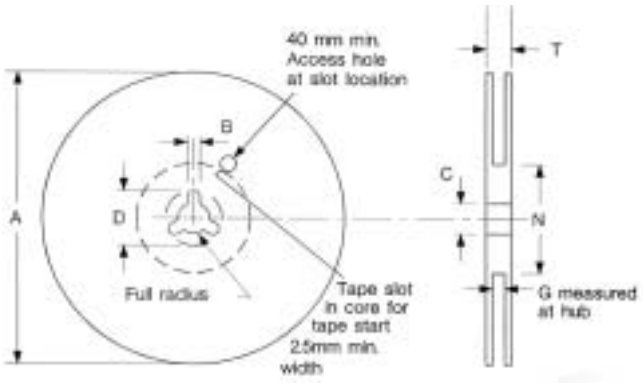

REEL MECHANICAL DATA

DIM.	mm		inch	
	MIN.	MAX.	MIN.	MAX.
A		330		12.992
B	1.5		0.059	
C	12.8	13.2	0.504	0.520
D	20.2		0.795	
G	16.4	18.4	0.645	0.724
N	50		1.968	
T		22.4		0.881

BASE QTY	BULK QTY
2500	2500

TAPE MECHANICAL DATA

DIM.	mm		inch	
	MIN.	MAX.	MIN.	MAX.
A0	6.8	7	0.267	0.275
B0	10.4	10.6	0.409	0.417
B1		12.1		0.476
D	1.5	1.6	0.059	0.063
D1	1.5		0.059	
E	1.65	1.85	0.065	0.073
F	7.4	7.6	0.291	0.299
K0	2.55	2.75	0.100	0.108
P0	3.9	4.1	0.153	0.161
P1	7.9	8.1	0.311	0.319
P2	1.9	2.1	0.075	0.082
R	40		1.574	
W	15.7	16.3	0.618	0.641

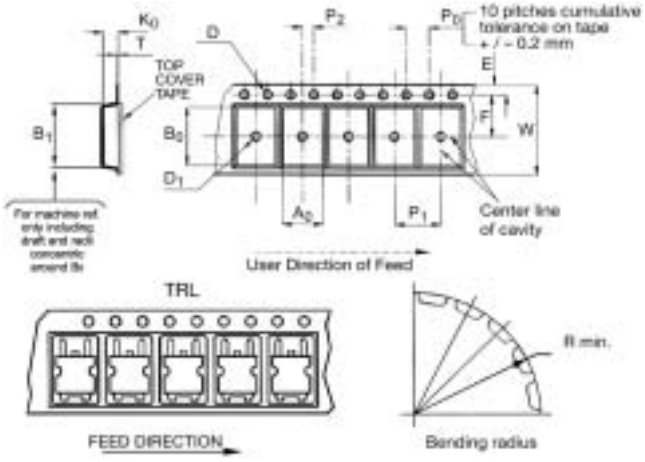

Table 9: Revision History

Date	Revision	Description of Changes
22-Nov-2004	2	Added SOT-223 Package and new stylesheet
14-Feb-2006	3	Modified marking on Table 2

Information furnished is believed to be accurate and reliable. However, STMicroelectronics assumes no responsibility for the consequences of use of such information nor for any infringement of patents or other rights of third parties which may result from its use. No license is granted by implication or otherwise under any patent or patent rights of STMicroelectronics. Specifications mentioned in this publication are subject to change without notice. This publication supersedes and replaces all information previously supplied. STMicroelectronics products are not authorized for use as critical components in life support devices or systems without express written approval of STMicroelectronics.

The ST logo is a registered trademark of STMicroelectronics

All other names are the property of their respective owners

© 2006 STMicroelectronics - All Rights Reserved

STMicroelectronics group of companies

Australia - Belgium - Brazil - Canada - China - Czech Republic - Finland - France - Germany - Hong Kong - India - Israel - Italy - Japan - Malaysia - Malta - Morocco - Singapore - Spain - Sweden - Switzerland - United Kingdom - United States of America