STPSC10H065

650 V power Schottky silicon carbide diode

Datasheet – production data

Features

- No or negligible reverse recovery
- Switching behavior independent of temperature
- Dedicated to PFC applications
- High forward surge capability

Description

The SiC diode is an ultrahigh performance power Schottky diode. It is manufactured using a silicon carbide substrate. The wide bandgap material allows the design of a Schottky diode structure with a 650 V rating. Due to the Schottky construction, no recovery is shown at turn-off and ringing patterns are negligible. The minimal capacitive turn-off behavior is independent of temperature.

Especially suited for use in PFC applications, this ST SiC diode will boost the performance in hard switching conditions. Its high forward surge capability ensures a good robustness during transient phases.

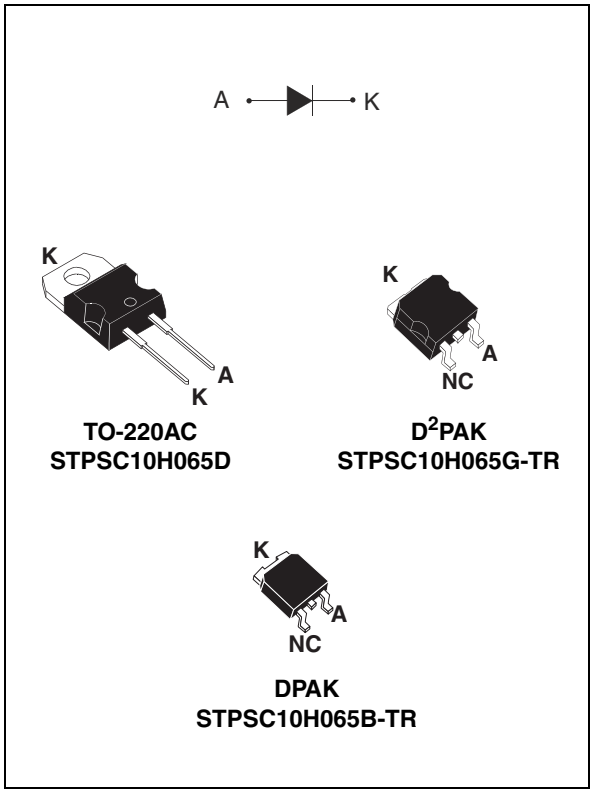

Table 1. Device summary

Symbol	Value
$I_{F(AV)}$	10 A
V_{RRM}	650 V
T_j (max)	175 °C

This is information on a product in full production. www.st.com

1 Characteristics

Table 2. Absolute ratings (limiting values at 25 °C unless otherwise specified)

Symbol	Parameter		Value	Unit
V_{RRM}	Repetitive peak reverse voltage		650	V
$I_{F(RMS)}$	Forward rms current		22	A
$I_{F(AV)}$	Average forward current	T_c = 120 °C, δ = 0.5	10	A
I_{FSM}	Surge non repetitive forward current	t_p = 10 ms sinusoidal, T_c = 25 °C t_p = 10 ms sinusoidal, T_c = 125 °C t_p = 10 µs square, T_c = 25 °C	90 80 470	A
I_{FRM}	Repetitive peak forward current	T_c = 120 °C,T_j = 150 °C, δ = 0.1	36	A
T_{stg}	Storage temperature range		-55 to +175	°C
T_j	Operating junction temperature(1)		-40 to +175	°C

1. $\frac{dPtot}{dTj} < \frac{1}{Rth(j-a)}$ condition to avoid thermal runaway for a diode on its own heatsink

Table 3. Thermal resistance (typical values)

Symbol	Parameter	Value		Unit
		Typ.	Max.	
$R_{th(j-c)}$	Junction to case	1.25	1.5	°C/W

Table 4. Static electrical characteristics

Symbol	Parameter	Tests conditions		Min.	Typ.	Max.	Unit
I_R (1)	Reverse leakage current	T_j = 25 °C	$V_R = V_{RRM}$	-	9	100	µA
		T_j = 150 °C		-	85	425	
V_F (2)	Forward voltage drop	T_j = 25 °C	I_F = 10 A	-	1.56	1.75	V
		T_j = 150 °C		-	1.98	2.5	

1. t_p = 10 ms, δ < 2%
2. t_p = 500 µs, δ < 2%

To evaluate the conduction losses use the following equation:

$P = 1.35 \times I_{F(AV)} + 0.115 \times I_F{}^2{}_{(RMS)}$

Table 5. Dynamic electrical characteristics

Symbol	Parameter	Test conditions	Typ.	Unit
Q_{cj}(1)	Total capacitive charge	V_R = 400 V,	28.5	nC
C_j	Total capacitance	V_R = 0 V, T_c = 25 °C, F = 1 MHz	480	pF
		V_R = 400 V, T_c = 25 °C, F = 1 MHz	48	

1. Most accurate value for the capacitive charge: $Q_{cj} = \int_0^{V_{OUT}} c_j(v_R).dv_R$

Figure 1. Forward voltage drop versus forward current (typical values, low level)

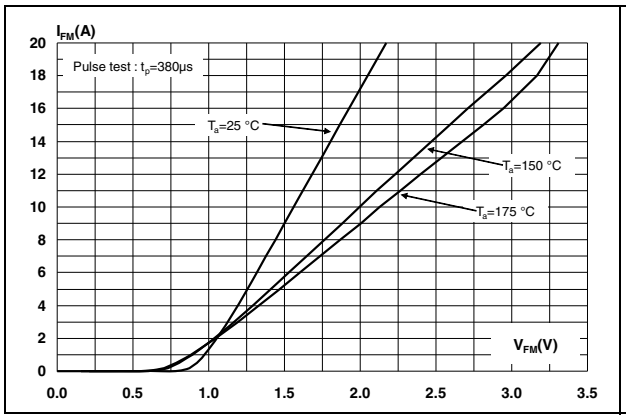

Figure 2. Forward voltage drop versus forward current (typical values, high level)

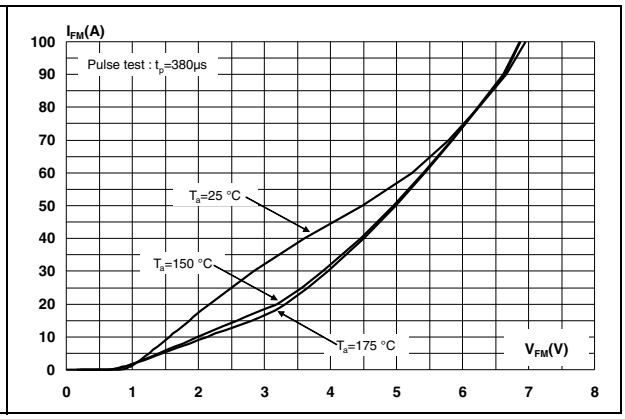

Figure 3. Reverse leakage current versus reverse voltage applied (typical values)

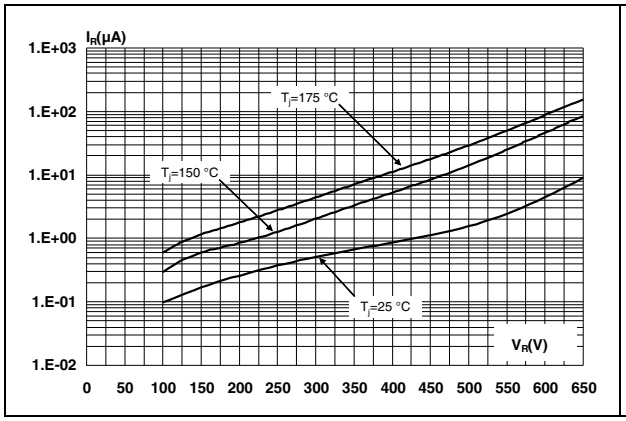

Figure 4. Peak forward current versus case temperature

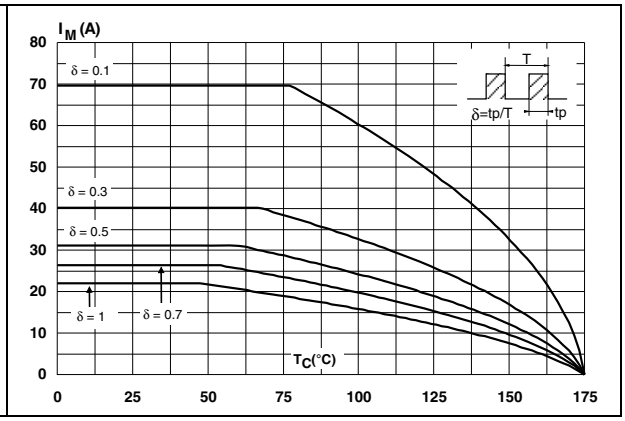

Figure 5. Junction capacitance versus reverse voltage applied (typical values)

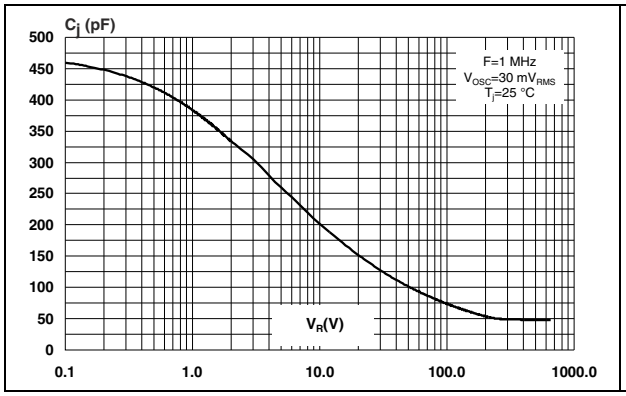

Figure 6. Relative variation of thermal impedance junction to case versus pulse duration

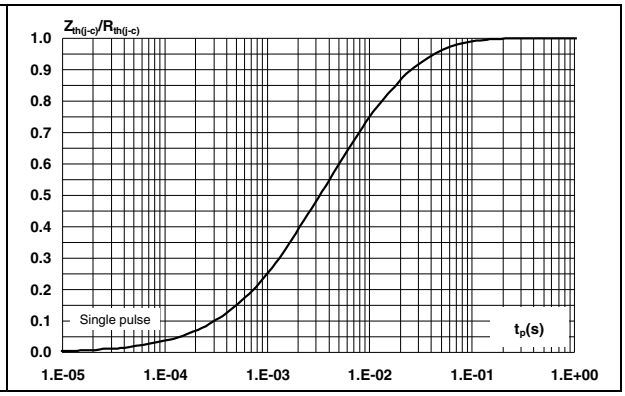

Figure 7. Non-repetitive peak surge forward current versus pulse duration (sinusoidal waveform)

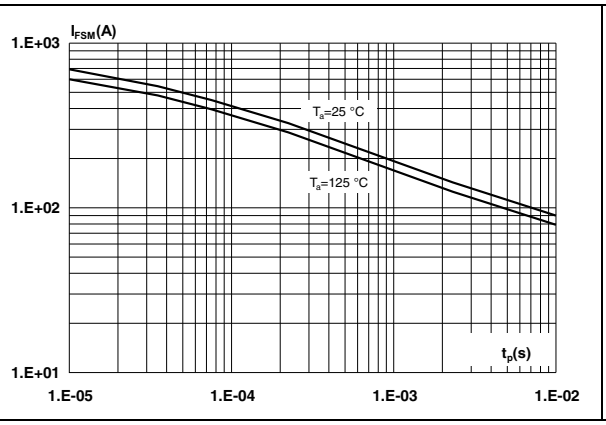

Figure 8. Total capacitive charges versus reverse voltage applied (typical values)

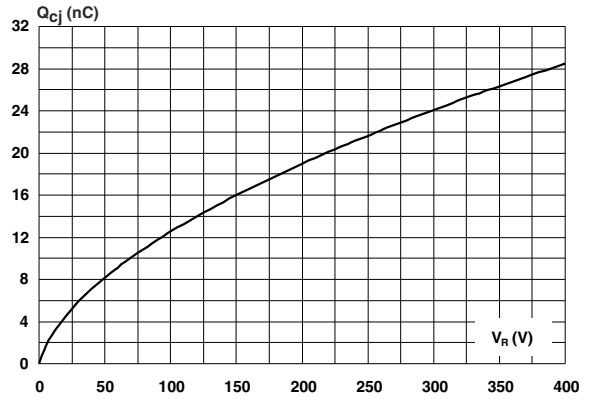

2 Package information

- Epoxy meets UL94, V0
- Recommended torque value (TO-220AC): 0.4 to 0.6 N·m
- Cooling method: conduction (C)

In order to meet environmental requirements, ST offers these devices in different grades of ECOPACK® packages, depending on their level of environmental compliance. ECOPACK® specifications, grade definitions and product status are available at: *www.st.com*. ECOPACK® is an ST trademark.

Table 6. TO-220AC dimensions

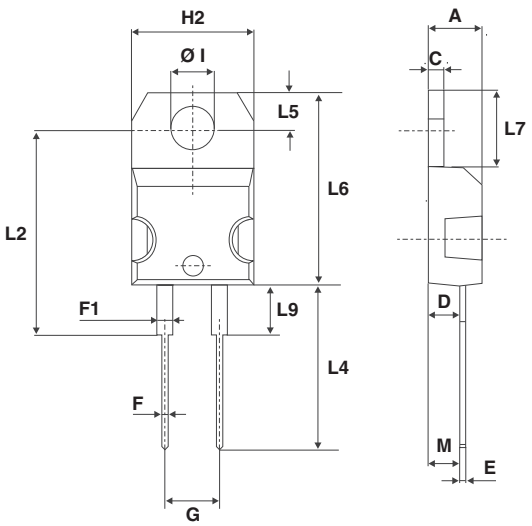

Ref.	Dimensions			
	Millimeters		Inches	
	Min.	Max.	Min.	Max.
A	4.40	4.60	0.173	0.181
C	1.23	1.32	0.048	0.051
D	2.40	2.72	0.094	0.107
E	0.49	0.70	0.019	0.027
F	0.61	0.88	0.024	0.034
F1	1.14	1.70	0.044	0.066
G	4.95	5.15	0.194	0.202
H2	10.00	10.40	0.393	0.409
L2	16.40 typ.		0.645 typ.	
L4	13.00	14.00	0.511	0.551
L5	2.65	2.95	0.104	0.116
L6	15.25	15.75	0.600	0.620
L7	6.20	6.60	0.244	0.259
L9	3.50	3.93	0.137	0.154
M	2.6 typ.		0.102 typ.	
Diam. I	3.75	3.85	0.147	0.151

Table 7. DPAK dimensions

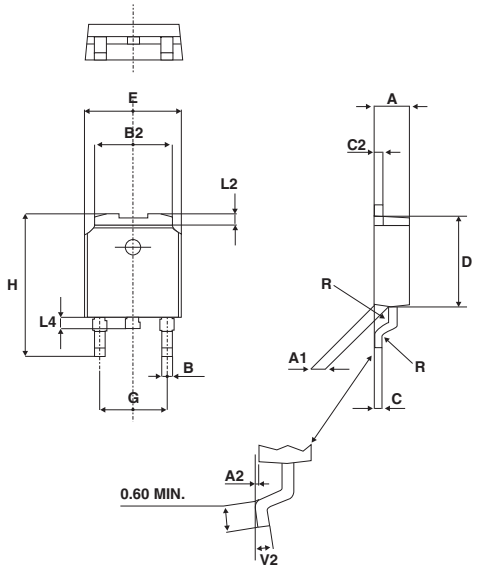

Ref.	Dimensions			
	Millimeters		Inches	
	Min.	Max.	Min.	Max.
A	2.20	2.40	0.086	0.094
A1	0.90	1.10	0.035	0.043
A2	0.03	0.23	0.001	0.009
B	0.64	0.90	0.025	0.035
B2	5.20	5.40	0.204	0.212
C	0.45	0.60	0.017	0.023
C2	0.48	0.60	0.018	0.023
D	6.00	6.20	0.236	0.244
E	6.40	6.60	0.251	0.259
G	4.40	4.60	0.173	0.181
H	9.35	10.10	0.368	0.397
L2	0.80 typ.		0.031 typ.	
L4	0.60	1.00	0.023	0.039
V2	0°	8°	0°	8°

Figure 9. Footprint (dimensions in mm)

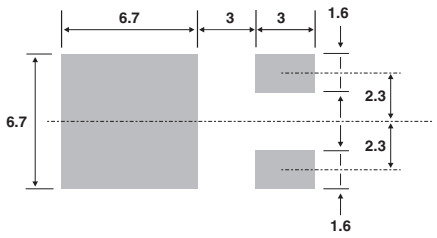

Table 8. D²PAK dimensions

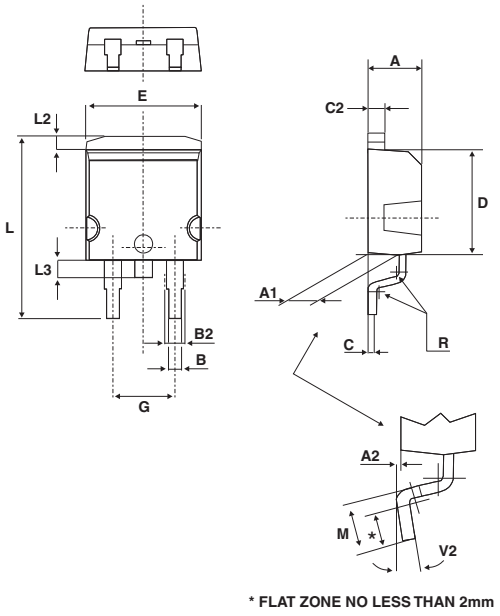

Ref.	Dimensions			
	Millimeters		Inches	
	Min.	Max.	Min.	Max.
A	4.40	4.60	0.173	0.181
A1	2.49	2.69	0.098	0.106
A2	0.03	0.23	0.001	0.009
B	0.70	0.93	0.027	0.037
B2	1.14	1.70	0.045	0.067
C	0.45	0.60	0.017	0.024
C2	1.23	1.36	0.048	0.054
D	8.95	9.35	0.352	0.368
E	10.00	10.40	0.393	0.409
G	4.88	5.28	0.192	0.208
L	15.00	15.85	0.590	0.624
L2	1.27	1.40	0.050	0.055
L3	1.40	1.75	0.055	0.069
M	2.40	3.20	0.094	0.126
R	0.40 typ.		0.016 typ.	
V2	0°	8°	0°	8°

Figure 10. Footprint (dimensions in mm)

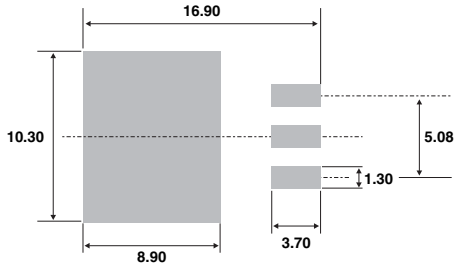

3 Ordering information

Table 9. Ordering information

Order code	Marking	Package	Weight	Base qty	Delivery mode
STPSC10H065D	STPSC10H065D	TO-220AC	1.86 g	50	Tube
STPSC10H065G-TR	STPSC10H065G	D^2PAK	1.48 g	1000	Tape and reel
STPSC10H065B-TR	STPSC 10H065	DPAK	0.32 g	2500	Tape and reel

4 Revision history

Table 10. Document revision history

Date	Revision	Changes
31-Aug-2012	1	First issue.
10-Oct-2012	2	Added Max. value to *Table 3*.

Please Read Carefully:

Information in this document is provided solely in connection with ST products. STMicroelectronics NV and its subsidiaries (“ST”) reserve the right to make changes, corrections, modifications or improvements, to this document, and the products and services described herein at any time, without notice.

All ST products are sold pursuant to ST’s terms and conditions of sale.

Purchasers are solely responsible for the choice, selection and use of the ST products and services described herein, and ST assumes no liability whatsoever relating to the choice, selection or use of the ST products and services described herein.

No license, express or implied, by estoppel or otherwise, to any intellectual property rights is granted under this document. If any part of this document refers to any third party products or services it shall not be deemed a license grant by ST for the use of such third party products or services, or any intellectual property contained therein or considered as a warranty covering the use in any manner whatsoever of such third party products or services or any intellectual property contained therein.

UNLESS OTHERWISE SET FORTH IN ST’S TERMS AND CONDITIONS OF SALE ST DISCLAIMS ANY EXPRESS OR IMPLIED WARRANTY WITH RESPECT TO THE USE AND/OR SALE OF ST PRODUCTS INCLUDING WITHOUT LIMITATION IMPLIED WARRANTIES OF MERCHANTABILITY, FITNESS FOR A PARTICULAR PURPOSE (AND THEIR EQUIVALENTS UNDER THE LAWS OF ANY JURISDICTION), OR INFRINGEMENT OF ANY PATENT, COPYRIGHT OR OTHER INTELLECTUAL PROPERTY RIGHT.

UNLESS EXPRESSLY APPROVED IN WRITING BY TWO AUTHORIZED ST REPRESENTATIVES, ST PRODUCTS ARE NOT RECOMMENDED, AUTHORIZED OR WARRANTED FOR USE IN MILITARY, AIR CRAFT, SPACE, LIFE SAVING, OR LIFE SUSTAINING APPLICATIONS, NOR IN PRODUCTS OR SYSTEMS WHERE FAILURE OR MALFUNCTION MAY RESULT IN PERSONAL INJURY, DEATH, OR SEVERE PROPERTY OR ENVIRONMENTAL DAMAGE. ST PRODUCTS WHICH ARE NOT SPECIFIED AS "AUTOMOTIVE GRADE" MAY ONLY BE USED IN AUTOMOTIVE APPLICATIONS AT USER’S OWN RISK.

Resale of ST products with provisions different from the statements and/or technical features set forth in this document shall immediately void any warranty granted by ST for the ST product or service described herein and shall not create or extend in any manner whatsoever, any liability of ST.

ST and the ST logo are trademarks or registered trademarks of ST in various countries.

Information in this document supersedes and replaces all information previously supplied.

The ST logo is a registered trademark of STMicroelectronics. All other names are the property of their respective owners.

© 2012 STMicroelectronics - All rights reserved

STMicroelectronics group of companies

Australia - Belgium - Brazil - Canada - China - Czech Republic - Finland - France - Germany - Hong Kong - India - Israel - Italy - Japan - Malaysia - Malta - Morocco - Philippines - Singapore - Spain - Sweden - Switzerland - United Kingdom - United States of America

www.st.com