STPS8H100

High voltage power Schottky rectifier

Main product characteristics

$I_{F(AV)}$	8 A
V_{RRM}	100 V
T_j	175° C
V_F(max)	0.58 V



D²PAK
STPS8H100G

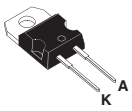

TO-220AC
STPS8H100D

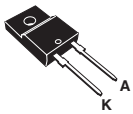

TO-220FPAC
STPS8H100FP

Features and benefits

- Negligible switching losses
- High junction temperature capability
- Low leakage current
- Good trade off between leakage current and forward voltage drop
- Insulated package:
  - TO-220FPAC
    Insulating voltage = 2000 V DC
    Typical package capacitance = 12 pF
- Avalanche capability specified

Description

Schottky barrier rectifier designed for high frequency compact Switched Mode Power Supplies such as adaptators and on board DC/DC converters.

Order Codes

Part Number	Marking
STPS8H100D	STPS8H100D
STPS8H100G	STPS8H100G
STPS8H100G-TR	STPS8H100G
STPS8H100FP	STPS8H100FP

Table 1. Absolute ratings (limiting values)

Symbol	Parameter			Value	Unit
V_{RRM}	Repetitive peak reverse voltage			100	V
$I_{F(RMS)}$	RMS forward voltage			30	A
$I_{F(AV)}$	Average forward current $\delta = 0.5$	TO-220AC, D²PAK	T_C = 165° C	8	A
		DO-15	T_C = 150° C		
I_{FSM}	Surge non repetitive forward current		t_p = 10 ms sinusoidal	250	A
P_{ARM}	Repetitive peak avalanche power		t_p = 1 µs T_j = 25° C	10800	W
T_{stg}	Storage temperature range			-65 to + 175	° C
T_j	Maximum operating junction temperature			175	° C

1 Characteristics

Table 2. Thermal resistance

Symbol	Parameter		Value	Unit
$R_{th(j-c)}$	Junction to case	TO-220AC, D^2PAK	1.6	° C/W
		TO-220FPAC	4	

Table 3. Static electrical characteristics (per diode)

Symbol	Parameter	Tests conditions		Min.	Typ	Max.	Unit
I_R (1)	Reverse leakage current	T_j = 25° C	$V_R = V_{RRM}$			4.5	µA
		T_j = 125° C			2	6.0	mA
V_F (2)	Forward voltage drop	T_j = 25° C	I_F = 8 A			0.71	V
		T_j = 125° C			0.56	0.58	
		T_j = 25° C	I_F = 10 A			0.77	
		T_j = 125° C			0.59	0.64	
		T_j = 25° C	I_F = 16 A			0.81	
		T_j = 125° C			0.65	0.68	

1. t_p = 5 ms, δ < 2%
2. t_p = 380 µs, δ < 2%

To evaluate the conduction losses use the following equation:
$P = 0.48 \times I_{F(AV)} + 0.0125\ I_F{}^2{}_{(RMS)}$

Figure 1. Average forward power dissipation versus average forward current

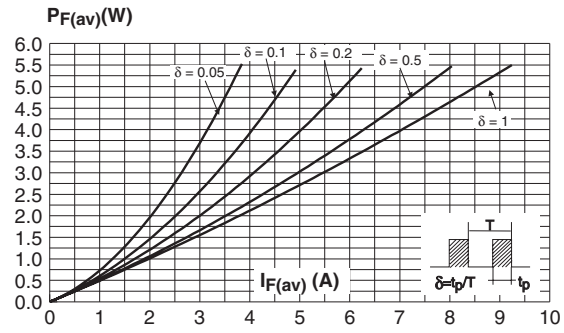

Figure 2. Normalized avalanche power derating versus pulse duration

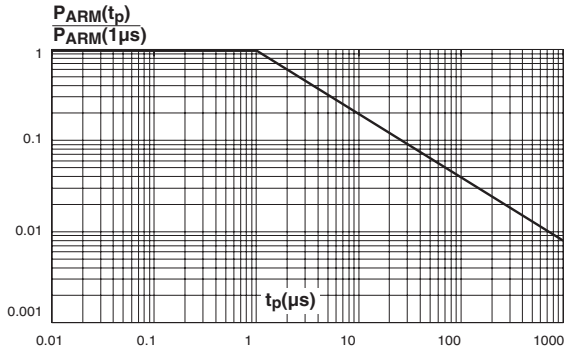

Figure 3. Normalized avalanche power derating versus junction temperature

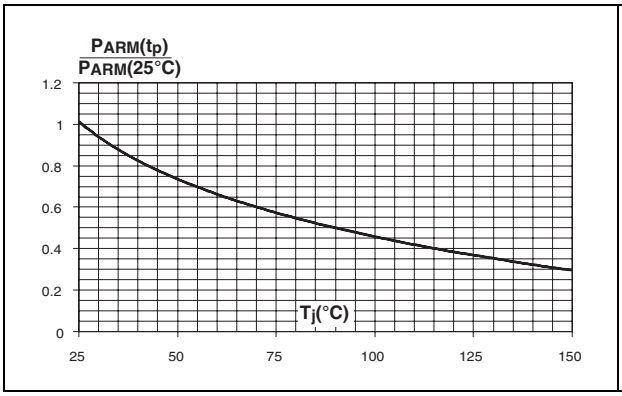

Figure 4. Average forward current versus ambient temperature, δ = 0.5, (TO-220AC, D²PAK)

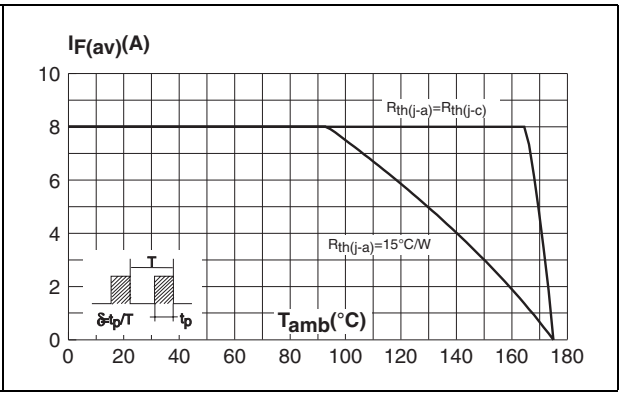

Figure 5. Average forward current versus ambient temperature, δ = 0.5, (TO-220FPAC)

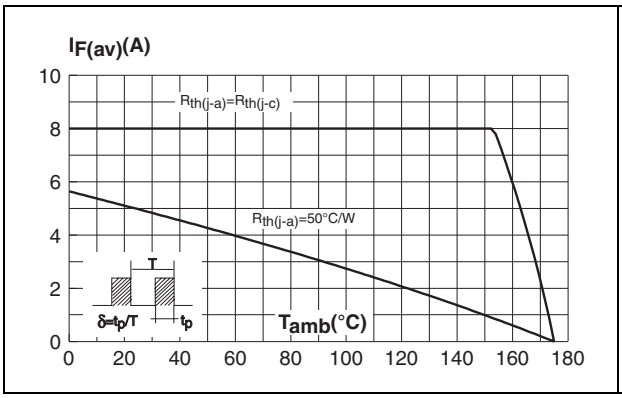

Figure 6. Non repetitive surge peak forward current versus overload duration - maximum values, per diode (TO-220AC, D²PAK)

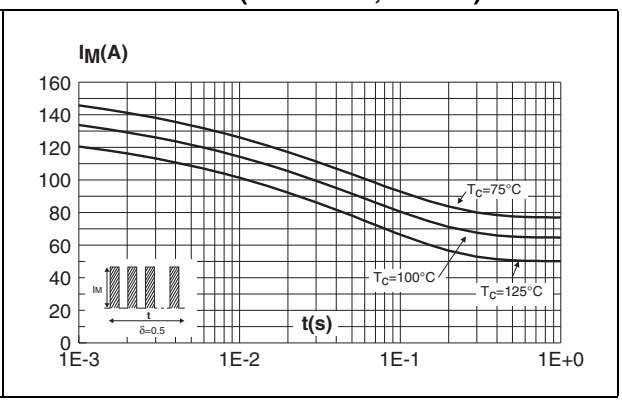

Figure 7. Non repetitive surge peak forward current versus overload duration - maximum values (TO-220FPAC)

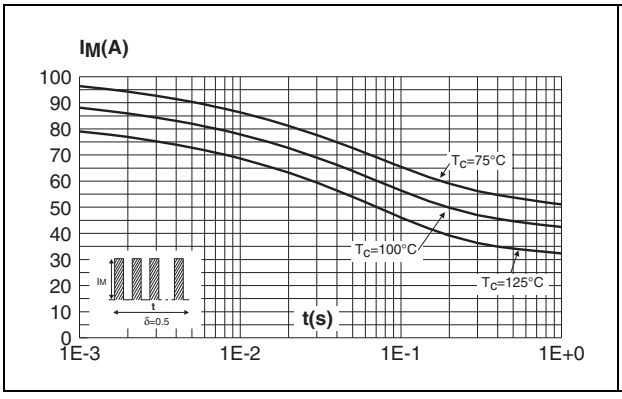

Figure 8. Relative variation of thermal impedance junction to case versus pulse duration (TO-220AC, D²PAK)

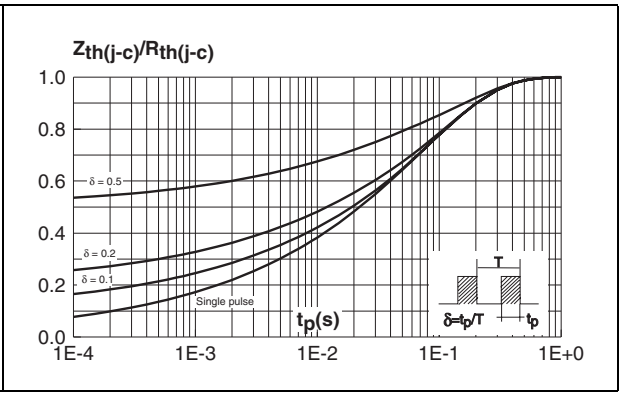

Figure 9. Relative variation of thermal impedance junction to case versus pulse duration (TO-220FPAC)

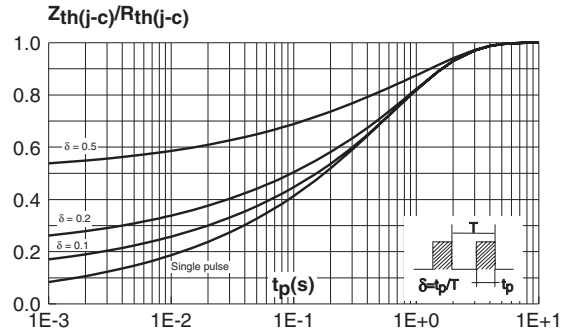

Figure 10. Reverse leakage current versus reverse voltage applied (typical values)

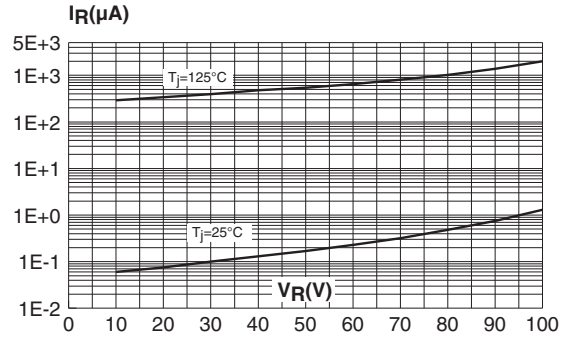

Figure 11. Junction capacitance versus reverse voltage applied (typical values)

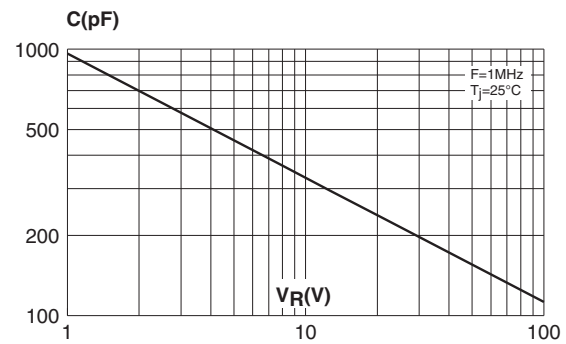

Figure 12. Forward voltage drop versus forward current (maximum values)

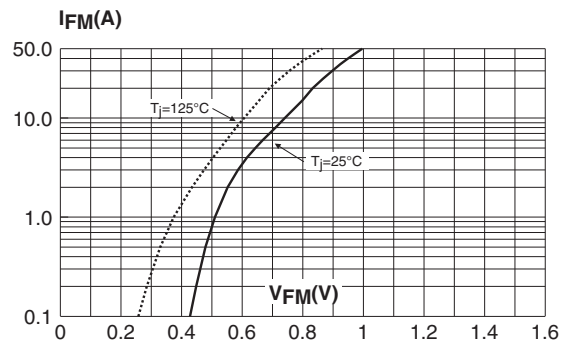

Figure 13. Thermal resistance junction to ambient versus copper surface under tab - Epoxy printed circuit board FR4, e_{cu} = 35 µm (D^2PAK)

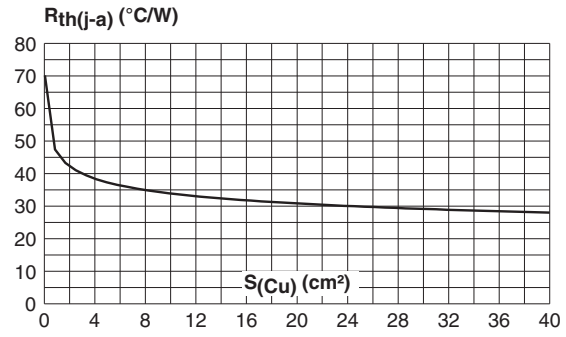

2 Package information

Epoxy meets UL94, V0.

Table 4. D²PAK Dimensions

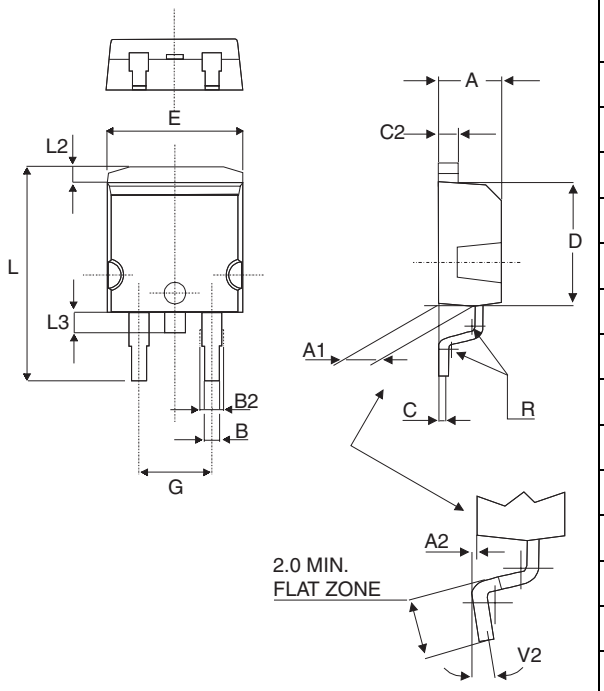

REF.	Dimensions			
	Millimeters		Inches	
	Min.	Max.	Min.	Max.
A	4.40	4.60	0.173	0.181
A1	2.49	2.69	0.098	0.106
A2	0.03	0.23	0.001	0.009
B	0.70	0.93	0.027	0.037
B2	1.14	1.70	0.045	0.067
C	0.45	0.60	0.017	0.024
C2	1.23	1.36	0.048	0.054
D	8.95	9.35	0.352	0.368
E	10.00	10.40	0.393	0.409
G	4.88	5.28	0.192	0.208
L	15.00	15.85	0.590	0.624
L2	1.27	1.40	0.050	0.055
L3	1.40	1.75	0.055	0.069
M	2.40	3.20	0.094	0.126
R	0.40 typ.		0.016 typ.	
V2	0°	8°	0°	8°

Figure 14. D²PAK footprint dimensions (in mm)

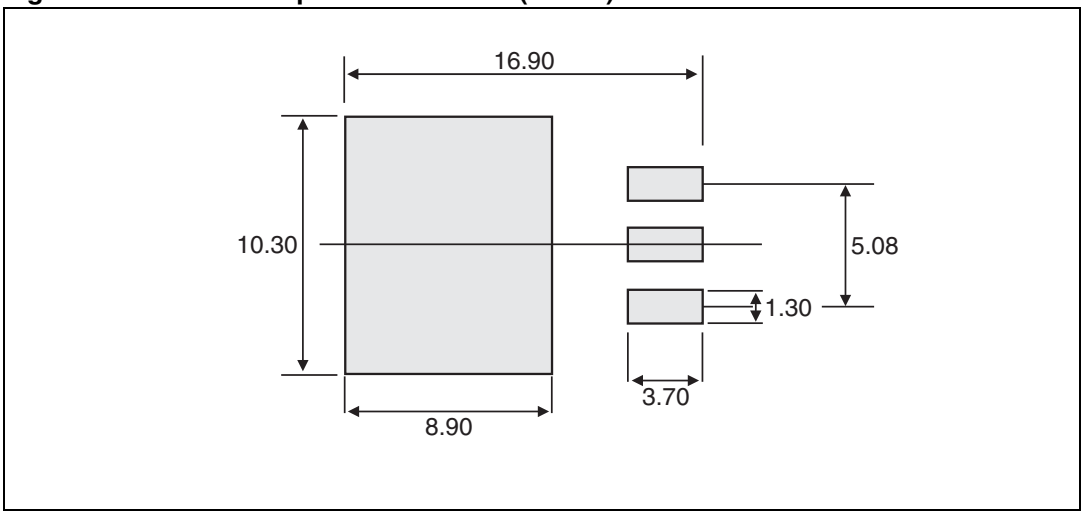

Table 5. TO-220AC Dimensions

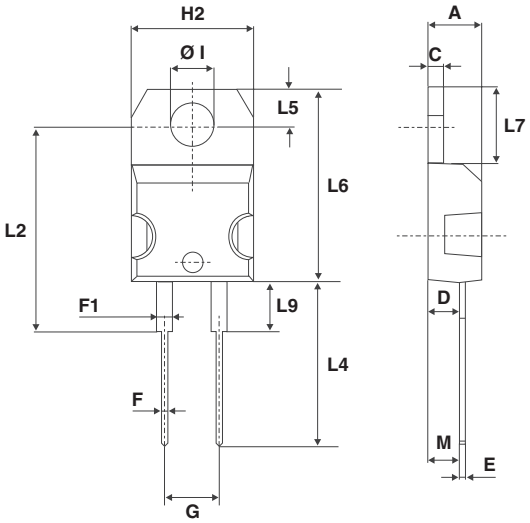

REF.	Dimensions			
	Millimeters		Inches	
	Min.	Max.	Min.	Max.
A	4.40	4.60	0.173	0.181
C	1.23	1.32	0.048	0.051
D	2.40	2.72	0.094	0.107
E	0.49	0.70	0.019	0.027
F	0.61	0.88	0.024	0.034
F1	1.14	1.70	0.044	0.066
G	4.95	5.15	0.194	0.202
H2	10.00	10.40	0.393	0.409
L2	16.40 typ.		0.645 typ.	
L4	13.00	14.00	0.511	0.551
L5	2.65	2.95	0.104	0.116
L6	15.25	15.75	0.600	0.620
L7	6.20	6.60	0.244	0.259
L9	3.50	3.93	0.137	0.154
M	2.6 typ.		0.102 typ.	
Diam. I	3.75	3.85	0.147	0.151

Table 6. TO-220FPAC Dimensions

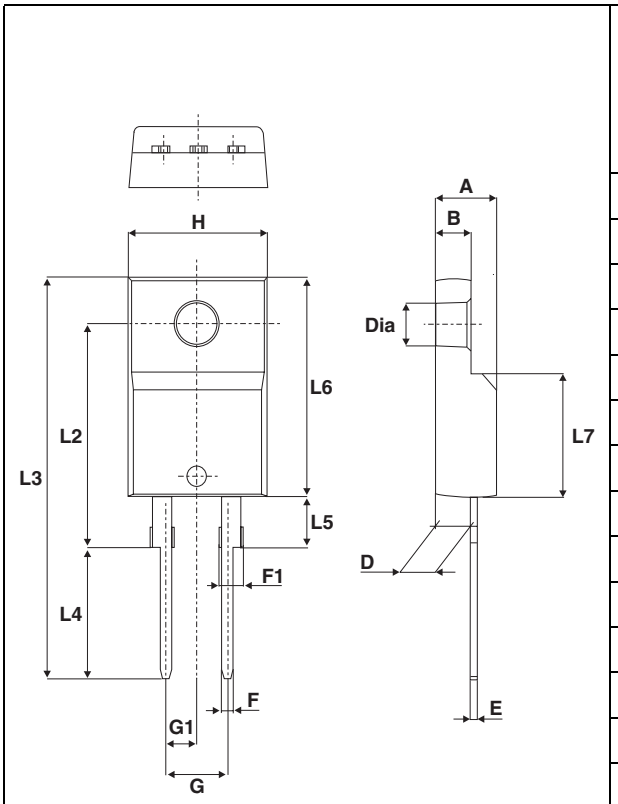

REF.	Dimensions			
	Millimeters		Inches	
	Min.	Max.	Min.	Max.
A	4.4	4.6	0.173	0.181
B	2.5	2.7	0.098	0.106
D	2.5	2.75	0.098	0.108
E	0.45	0.70	0.018	0.027
F	0.75	1	0.030	0.039
F1	1.15	1.70	0.045	0.067
G	4.95	5.20	0.195	0.205
G1	2.4	2.7	0.094	0.106
H	10	10.4	0.393	0.409
L2	16 Typ.		0.63 Typ.	
L3	28.6	30.6	1.126	1.205
L4	9.8	10.6	0.386	0.417
L5	2.9	3.6	0.114	0.142
L6	15.9	16.4	0.626	0.646
L7	9.00	9.30	0.354	0.366
Dia.	3.00	3.20	0.118	0.126

In order to meet environmental requirements, ST offers these devices in ECOPACK® packages. These packages have a lead-free second level interconnect. The category of second level interconnect is marked on the package and on the inner box label, in compliance with JEDEC Standard JESD97. The maximum ratings related to soldering conditions are also marked on the inner box label. ECOPACK is an ST trademark. ECOPACK specifications are available at: www.st.com.

3 Ordering information

Ordering type	Marking	Package	Weight	Base qty	Delivery mode
STPS8H100D	STPS8H100D	TO-220AC	1.86 g	50	Tube
STPS8H100FP	STPS8H100FP	TO-220FPAC	1.9 g	50	Tube
STPS8H100G	STPS8H100G	D^2PAK	1.48 g	50	Tube
STPS8H100G-TR	STPS8H100G	D^2PAK	1.48 g	500	Tape and reel

4 Revision history

Date	Revision	Description of Changes
Jul-2003	6D	Last update.
1-June-2006	10	Reformatted to current standard. Added ECOPACK statement. Changed nF to pF in Figure 11. Revision number set to 10 to align with on-line versioning.

Please Read Carefully:

Information in this document is provided solely in connection with ST products. STMicroelectronics NV and its subsidiaries (“ST”) reserve the right to make changes, corrections, modifications or improvements, to this document, and the products and services described herein at any time, without notice.

All ST products are sold pursuant to ST’s terms and conditions of sale.

Purchasers are solely responsible for the choice, selection and use of the ST products and services described herein, and ST assumes no liability whatsoever relating to the choice, selection or use of the ST products and services described herein.

No license, express or implied, by estoppel or otherwise, to any intellectual property rights is granted under this document. If any part of this document refers to any third party products or services it shall not be deemed a license grant by ST for the use of such third party products or services, or any intellectual property contained therein or considered as a warranty covering the use in any manner whatsoever of such third party products or services or any intellectual property contained therein.

UNLESS OTHERWISE SET FORTH IN ST’S TERMS AND CONDITIONS OF SALE ST DISCLAIMS ANY EXPRESS OR IMPLIED WARRANTY WITH RESPECT TO THE USE AND/OR SALE OF ST PRODUCTS INCLUDING WITHOUT LIMITATION IMPLIED WARRANTIES OF MERCHANTABILITY, FITNESS FOR A PARTICULAR PURPOSE (AND THEIR EQUIVALENTS UNDER THE LAWS OF ANY JURISDICTION), OR INFRINGEMENT OF ANY PATENT, COPYRIGHT OR OTHER INTELLECTUAL PROPERTY RIGHT.

UNLESS EXPRESSLY APPROVED IN WRITING BY AN AUTHORIZE REPRESENTATIVE OF ST, ST PRODUCTS ARE NOT DESIGNED, AUTHORIZED OR WARRANTED FOR USE IN MILITARY, AIR CRAFT, SPACE, LIFE SAVING, OR LIFE SUSTAINING APPLICATIONS, NOR IN PRODUCTS OR SYSTEMS, WHERE FAILURE OR MALFUNCTION MAY RESULT IN PERSONAL INJURY, DEATH, OR SEVERE PROPERTY OR ENVIRONMENTAL DAMAGE.

Resale of ST products with provisions different from the statements and/or technical features set forth in this document shall immediately void any warranty granted by ST for the ST product or service described herein and shall not create or extend in any manner whatsoever, any liability of ST.

ST and the ST logo are trademarks or registered trademarks of ST in various countries.

Information in this document supersedes and replaces all information previously supplied.

The ST logo is a registered trademark of STMicroelectronics. All other names are the property of their respective owners.

© 2006 STMicroelectronics - All rights reserved

STMicroelectronics group of companies

Australia - Belgium - Brazil - Canada - China - Czech Republic - Finland - France - Germany - Hong Kong - India - Israel - Italy - Japan - Malaysia - Malta - Morocco - Singapore - Spain - Sweden - Switzerland - United Kingdom - United States of America

www.st.com