STPS80L30CY

LOW DROP POWER SCHOTTKY RECTIFIER

PRELIMINARY DATASHEET

MAIN PRODUCT CHARACTERISTICS

$I_{F(AV)}$	2 x 40 A
V_{RRM}	30 V
Tj (max)	150 °C
V_F (max)	0.38 V

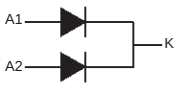

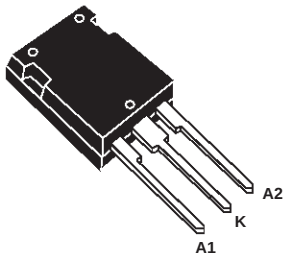

Max247

FEATURES AND BENEFITS

- VERY SMALL CONDUCTION LOSSES
- NEGLIGIBLE SWITCHING LOSSES
- EXTREMELY FAST SWITCHING
- LOW FORWARD VOLTAGE DROP
- LOW THERMAL RESISTANCE

DESCRIPTION

Dual center tap Schottky rectifier suited for CAD computers and servers.

Packaged in MAX247, this device is intended for use in low voltage, high frequency switching power supplies, free wheeling and polarity protection applications.

ABSOLUTE RATINGS (limiting values, per diode)

Symbol	Parameter			Value	Unit
V_{RRM}	Repetitive peak reverse voltage			30	V
$I_{F(RMS)}$	RMS forward current			50	A
$I_{F(AV)}$	Average forward current	Tc = 135°C δ = 0.5	Per diode Per device	40 80	A
I_{FSM}	Surge non repetitive forward current	tp = 10 ms sinusoidal		400	A
I_{RRM}	Repetitive peak reverse current	tp = 2 µs F = 1kHz square		2	A
T_{stg}	Storage temperature range			- 65 to + 150	°C
Tj	Maximum operating junction temperature			150	°C
dV/dt	Critical rate of rise of reverse voltage			10000	V/µs

* : $\frac{dPtot}{dTj} < \frac{1}{Rth(j-a)}$ thermal runaway condition for a diode on its own heatsink

THERMAL RESISTANCES

Symbol	Parameter		Value	Unit
$R_{th\ (j-c)}$	Junction to case	Per diode	0.7	°C/W
		Total	0.5	
$R_{th\ (c)}$		Coupling	0.3	

When the diodes 1 and 2 are used simultaneously:
Δ Tj(diode 1) = P(diode1) x $R_{th(j-c)}$(Per diode) + P(diode 2) x $R_{th(c)}$

STATIC ELECTRICAL CHARACTERISTICS (per diode)

Symbol	Parameter	Tests conditions		Min.	Typ.	Max.	Unit
I_R *	Reverse leakage current	Tj = 25°C	$V_R = V_{RRM}$			4	mA
		Tj = 125°C			0.7	1.5	A
V_F *	Forward voltage drop	Tj = 25°C	I_F = 40 A			0.48	V
		Tj = 125°C	I_F = 40 A		0.34	0.38	
		Tj = 25°C	I_F = 80 A			0.58	
		Tj = 125°C	I_F = 80 A		0.48	0.53	

Pulse test : * tp = 380 µs, δ < 2%

To evaluate the maximum conduction losses use the following equation :
$P = 0.23 \times I_{F(AV)} + 0.0037 \times I_F^2{}_{(RMS)}$

PACKAGE MECHANICAL DATA

MAX247

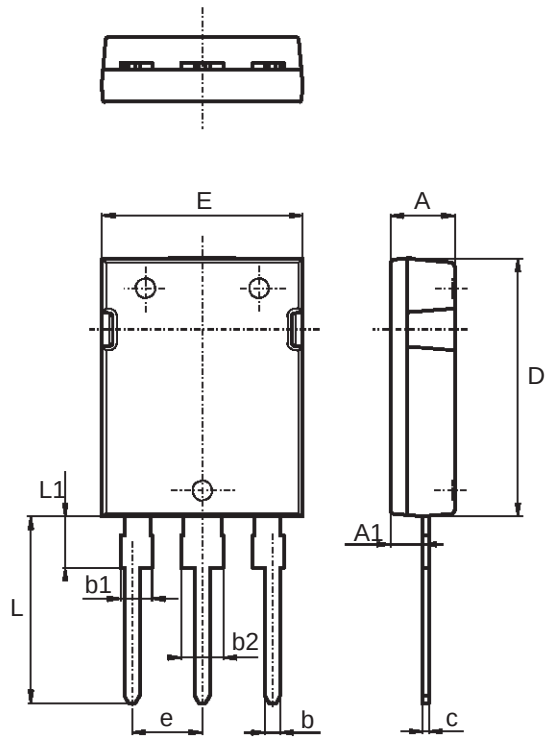

REF.	DIMENSIONS			
	Millimeters		Inches	
	Min.	Max.	Min.	Max.
A	4.70	5.30	0.185	0.209
A1	2.20	2.60	0.087	0.102
b	1.00	1.40	0.038	0.055
b1	2.00	2.40	0.079	0.094
b2	3.00	3.40	0.118	0.133
c	0.40	0.80	0.016	0.031
D	19.70	10.30	0.776	0.799
e	5.35	5.55	0.211	0.219
E	15.30	15.90	0.602	0.626
L	14.20	15.20	0.559	0.598
L1	3.70	4.30	0.146	0.169

Ordering type	Marking	Package	Weight	Base qty	Delivery mode
STPS80L30CY	STPS80L30CY	MAX247	4.4g	30	Tube

- Epoxy meets UL94,V0
- Cooling method: C

Information furnished is believed to be accurate and reliable. However, STMicroelectronics assumes no responsibility for the consequences of use of such information nor for any infringement of patents or other rights of third parties which may result from its use. No license is granted by implication or otherwise under any patent or patent rights of STMicroelectronics. Specifications mentioned in this publication are subject to change without notice. This publication supersedes and replaces all information previously supplied.
STMicroelectronics products are not authorized for use as critical components in life support devices or systems without express written approval of STMicroelectronics.

The ST logo is a registered trademark of STMicroelectronics

© 1999 STMicroelectronics - Printed in Italy - All rights reserved.

STMicroelectronics GROUP OF COMPANIES
Australia - Brazil - China - Finland - France - Germany - Hong Kong - India - Italy - Japan - Malaysia
Malta - Morocco - Singapore - Spain - Sweden - Switzerland - United Kingdom - U.S.A.

http://www.st.com