STPR620CT/CF/CFP

ULTRA FAST RECOVERY RECTIFIER DIODES

MAIN PRODUCT CHARACTERISTICS

$I_{F(AV)}$	2 x 3 A
V_{RRM}	200 V
$T_{j(max)}$	150°C
$V_{F(max)}$	0.99 V
$t_{rr(max)}$	30 ns

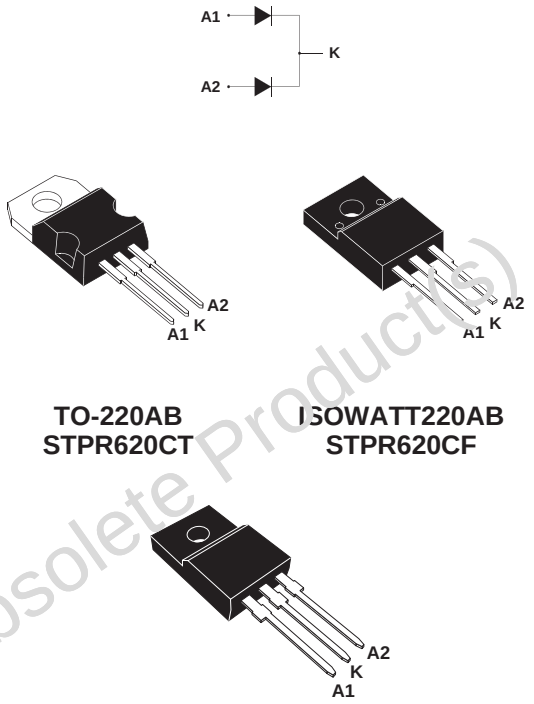

TO-220AB
STPR620CT

ISOWATT220AB
STPR620CF

TO-220FPAB
STPR620CFP

FEATURES

- Suited for SMPS
- Low losses
- Low forward and reverse recovery time
- High surge current capability
- Insulated packages:
  ISOWATT220AB / TO-220FPAB
  Insulation voltage = 2000V DC
  Capacitance = 12pF

DESCRIPTION

Low cost dual center tap rectifier suited for Switched Mode Power Supplies and high frequency DC to DC converters.

Packaged in TO-220AB, TO-220FPAB and ISOWATT220AB, this device is intended for use in low voltage, high frequency inverters, free wheeling and polarity protection applications.

Obsolete Product(s) - Obsolete Product(s)

ABSOLUTE MAXIMUM (limiting values)

Symbol	Parameter				Value	Unit
V_{RRM}	Repetitive peak reverse voltage				200	V
$I_{F(RMS)}$	RMS forward current			Per diode	10	A
$I_{F(AV)}$	Average forward current $\delta = 0.5$	TO-220AB	Tc=125°C	Per diode	3	A
		ISOWATT220AB TO-220FPAB	Tc=120°C	Per device	6	
I_{FSM}	Surge non repetitive forward current		tp=10ms sinusoidal		30	A
T_{stg}	Storage temperature range				- 65 to + 150	°C
Tj	Maximum junction temperature				150	°C

THERMAL RESISTANCES

Symbol	Parameter			Value	Unit
$R_{th\ (j-c)}$	Junction to case	TO-220AB	Per diode	6.5	°C/W
		ISOWATT220AB TO-220FPAB	Per diode	8.5	

When the diodes 1 and 2 are used simultaneously :
Δ Tj(diode 1) = P(diode 1) x Rth(j-c) (Per diode) + P(diode 2) x Rth(c)

ELECTRICAL CHARACTERISTICS

STATIC CHARACTERISTICS

Symbol	Test Conditions		Min.	Typ.	Max.	Unit
I_R *	T_j = 25°C	$V_R = V_{RRM}$			50	µA
	T_j = 100°C				0.6	mA
V_F **	T_j = 125°C	I_F = 3 A			0.99	V
	T_j = 125°C	I_F = 6 A			1.20	
	T_j = 25°C	I_F = 6 A			1.25	

Pulse test :
* tp = 5 ms, δ < 2 %
** tp = 380 µs, δ < 2 %

RECOVERY CHARACTERISTICS

Symbol	Test Conditions			Min.	Typ.	Max.	Unit
trr	T_j = 25°C	I_F = 0.5A I_R = 1A	Irr = 0.25A			30	ns
tfr	T_j = 25°C	I_F = 1A V_{FR} = 1.1 x V_F	tr = 10 ns		20		ns
V_{FP}	T_j = 25°C	I_F = 1A	tr = 10 ns		3		V

To evaluate the conduction losses use the following equation :
$P = 0.78 \times I_{F(AV)} + 0.070 \times I_F{}^2{}_{(RMS)}$

Fig. 1: Average forward power dissipation versus average forward current (Per diode).

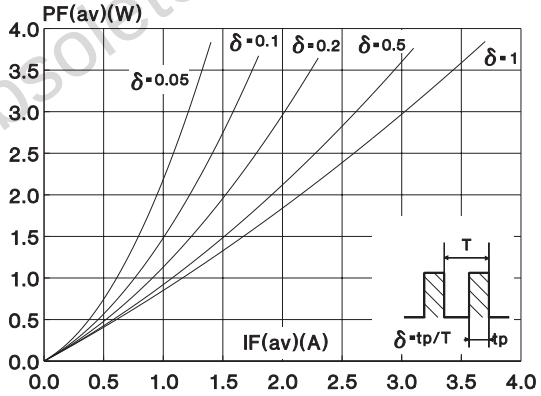

Fig. 2: Peak current versus form factor (Per diode).

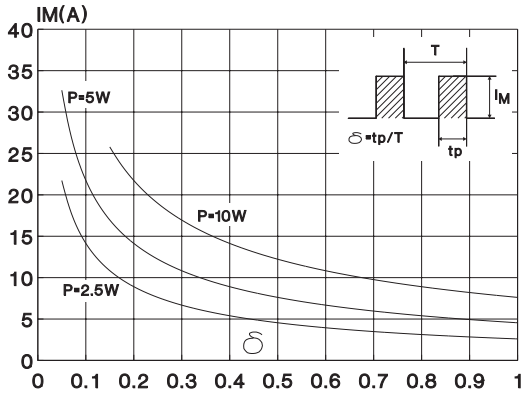

Obsolete Product(s) - Obsolete Product(s)

Fig. 3: Average current versus ambient temperature. (duty cycle: 0.5) (TO-220AB)

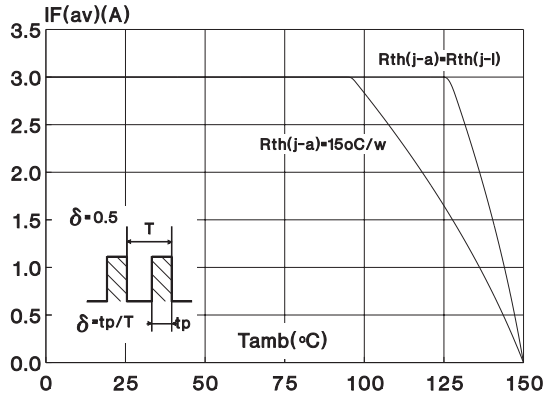

Fig. 4: Average current versus ambient temperature. (duty cycle : 0.5) (ISOWATT220AB / TO-220FPAB)

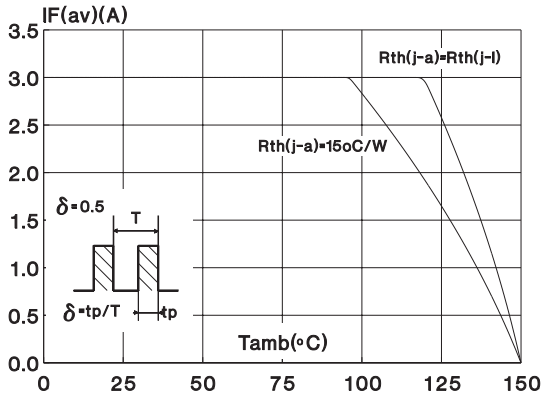

Fig. 5: Non repetitive surge peak forward current versus overload duration (Maximum values) (Per diode) (TO-220AB).

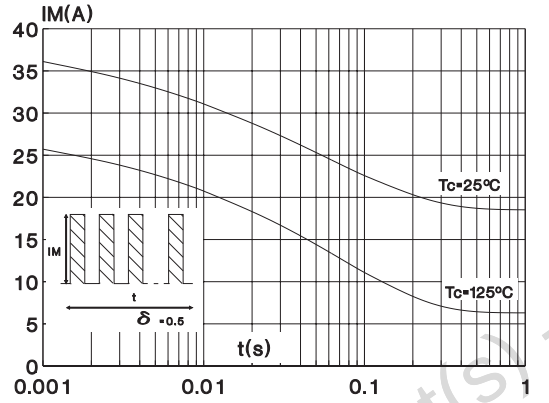

Fig. 6: Non repetitive surge peak forward current versus overload duration (Maximum values) (Per diode) (ISOWATT220AB / TO-220FPAB).

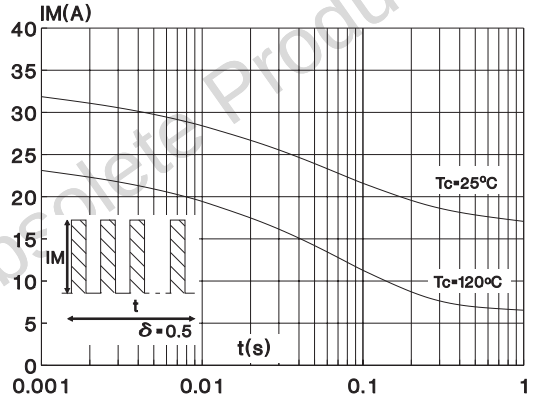

Fig. 7: Relative variation of thermal transient impedance junction to case versus pulse duration (Per diode) (TO-220AB).

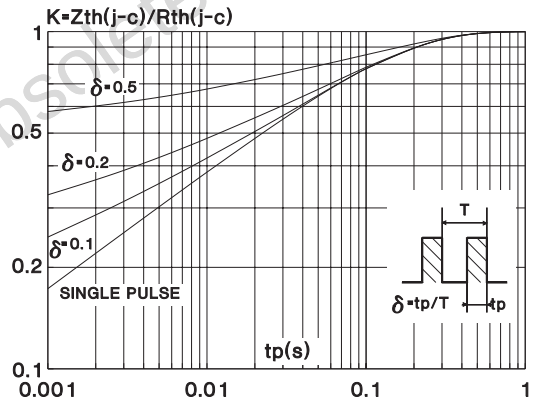

Fig. 8: Relative variation of thermal transient impedance junction to case versus pulse duration (Per diode) (ISOWATT220AB / TO-220FPAB).

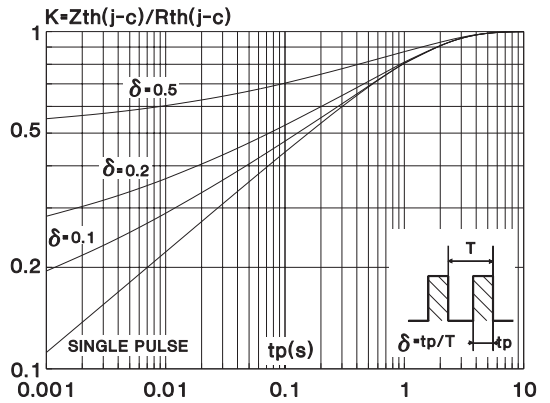

Obsolete Product(s) - Obsolete Product(s)

Fig. 9: Forward voltage drop versus forward current. (Maximum values) (Per diode).

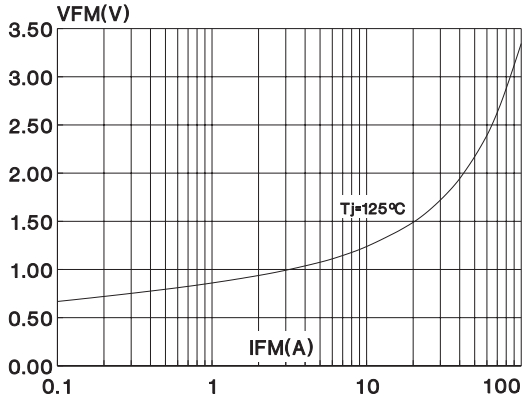

Fig. 10: Junction capacitance versus reverse voltage applied (Typical values) (Per diode).

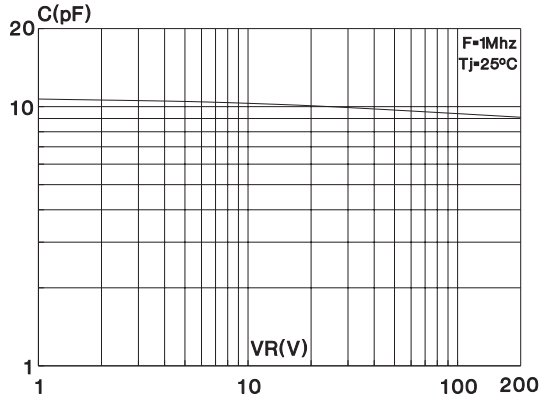

Fig. 11: Recovery charges versus dI_F/dt (Per diode).

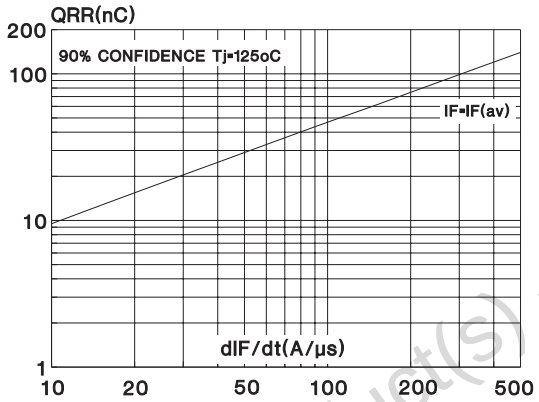

Fig. 12: Peak reverse current versus dIF/dt (Per diode).

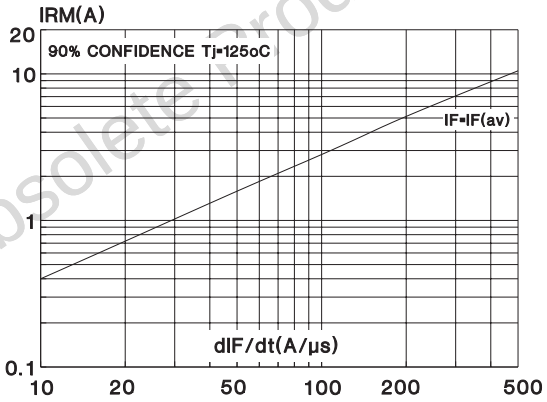

Fig. 13: Dynamic parameters versus junction temperature (Per diode).

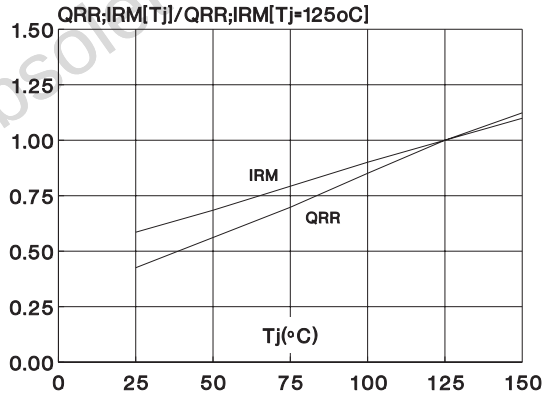

Obsolete Product(s) - Obsolete Product(s)

PACKAGE MECHANICAL DATA
ISOWATT220AB (JEDEC outline)

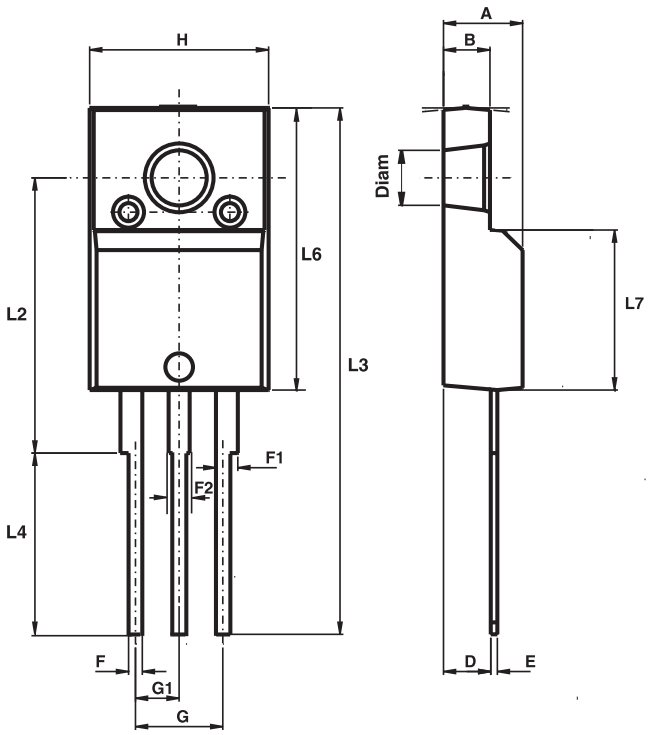

REF.	DIMENSIONS			
	Millimeters		Inches	
	Min.	Max.	Min.	Max.
A	4.40	4.60	0.173	0.181
B	2.50	2.70	0.098	0.106
D	2.50	2.75	0.098	0.108
E	0.40	0.70	0.016	0.028
F	0.75	1.00	0.030	0.039
F1	1.15	1.70	0.045	0.067
F2	1.15	1.70	0.045	0.067
G	4.95	5.20	0.195	0.205
G1	2.40	2.70	0.094	0.106
H	10.00	10.40	0.394	0.409
L2	16.00 typ.		0.630 typ.	
L3	28.60	30.60	1.125	1.205
L4	9.80	10.60	0.386	0.417
L6	15.90	16.40	0.626	0.646
L7	9.00	9.30	0.354	0.366
Diam	3.00	3.20	0.118	0.126

Obsolete Product(s) - Obsolete Product(s)

PACKAGE MECHANICAL DATA

TO-220FPAB

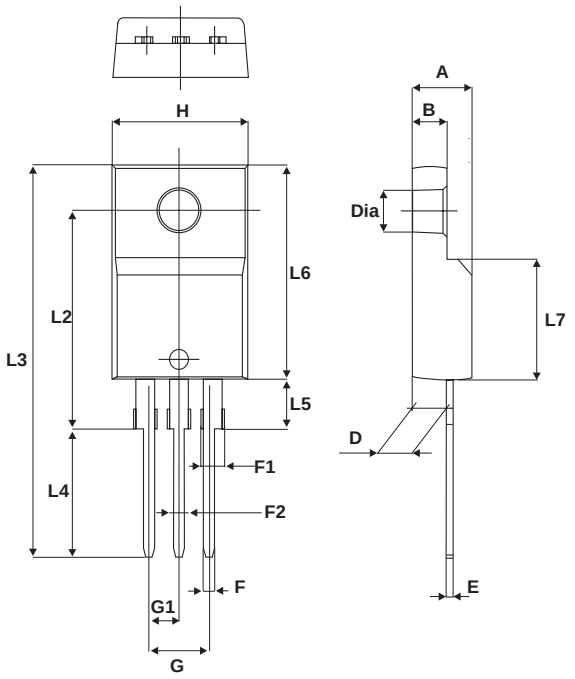

REF.	DIMENSIONS			
	Millimeters		Inches	
	Min.	Max.	Min.	Max.
A	4.4	4.6	0.173	0.181
B	2.5	2.7	0.098	0.106
D	2.5	2.75	0.098	0.108
E	0.45	0.70	0.018	0.027
F	0.75	1	0.030	0.039
F1	1.15	1.70	0.045	0.067
F2	1.15	1.70	0.045	0.067
G	4.95	5.20	0.195	0.205
G1	2.4	2.7	0.094	0.106
H	10	10.4	0.393	0.409
L2	16 Typ.		0.63 Typ.	
L3	28.6	30.6	1.126	1.205
L4	9.8	10.6	0.386	0.417
L5	2.9	3.6	0.114	0.142
L6	15.9	16.4	0.626	0.646
L7	9.00	9.30	0.354	0.366
Dia.	3.00	3.20	0.118	0.126

- Cooling method : by conduction (C)
- Recommended torque value (ISOWATT220AB, TO-220FPAB): 0.55 Nm
- Maximum torque value (ISOWATT220AB, TO-220FPAB): 0.7 Nm
- Recommended torque value (TO-220AB): 0.8 Nm
- Maximum torque value (TO-220AB): 1.0 Nm
- Epoxy meets UL94, V0

Obsolete Product(s) - Obsolete Product(s)

PACKAGE MECHANICAL DATA

TO-220AB (JEDEC outline)

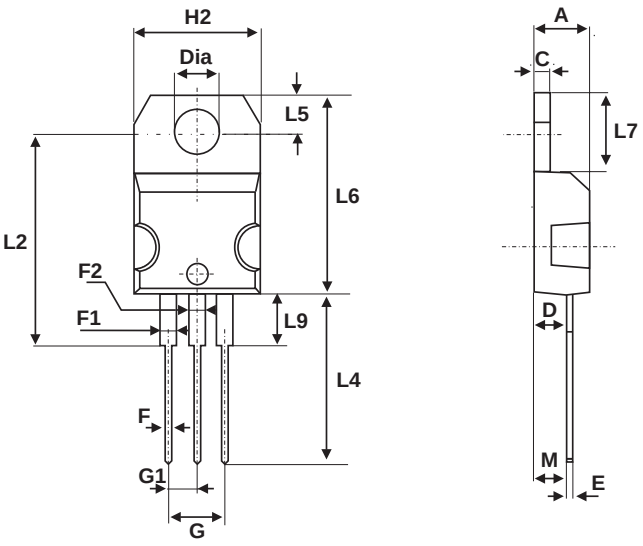

REF.	DIMENSIONS			
	Millimeters		Inches	
	Min.	Max.	Min.	Max.
A	4.40	4.60	0.173	0.181
C	1.23	1.32	0.048	0.051
D	2.40	2.72	0.094	0.107
E	0.49	0.70	0.019	0.027
F	0.61	0.88	0.024	0.034
F1	1.14	1.70	0.044	0.066
F2	1.14	1.70	0.044	0.066
G	4.95	5.15	0.194	0.202
G1	2.40	2.70	0.094	0.106
H2	10	10.40	0.393	0.409
L2	16.4 typ.		0.645 typ.	
L4	13	14	0.511	0.551
L5	2.65	2.95	0.104	0.116
L6	15.25	15.75	0.600	0.620
L7	6.20	6.60	0.244	0.259
L9	3.50	3.93	0.137	0.154
M	2.6 typ.		0.102 typ.	
Diam.	3.75	3.85	0.147	0.151

Type	Marking	Package	Weight	Base Qty	Delivery mode
STPR620CT	STPR620CT	TO-220AB	2.23 g	50	Tube
STPR620CF	STPR620CF	ISOWATT220AB	2.2 g	50	Tube
STPR620CFP	STPR620CFP	TO-220FPAB	2 g	50	Tube

Obsolete Product(s) - Obsolete Product(s)

Information furnished is believed to be accurate and reliable. However, STMicroelectronics assumes no responsibility for the consequences of use of such information nor for any infringement of patents or other rights of third parties which may result from its use. No license is granted by implication or otherwise under any patent or patent rights of STMicroelectronics. Specifications mentioned in this publication are subject to change without notice. This publication supersedes and replaces all information previously supplied.
STMicroelectronics products are not authorized for use as critical components in life support devices or systems without express written approval of STMicroelectronics.

The ST logo is a registered trademark of STMicroelectronics

© 2002 STMicroelectronics - Printed in Italy - All rights reserved.

STMicroelectronics GROUP OF COMPANIES
Australia - Brazil - Canada - China - Finland - France - Germany
Hong Kong - India - Israel - Italy - Japan - Malaysia - Malta - Morocco - Singapore
Spain - Sweden - Switzerland - United Kingdom - United States.

http://www.st.com