SGS-THOMSON MICROELECTRONICS

STP80N05-09

N - CHANNEL ENHANCEMENT MODE "ULTRA HIGH DENSITY" POWER MOS TRANSISTOR

TYPE	V_{DSS}	$R_{DS(on)}$	I_D
STP80N05-09	50 V	< 0.009 Ω	80 A

- ULTRA HIGH DENSITY TECHNOLOGY
- TYPICAL $R_{DS(on)}$ = 7 mΩ
- AVALANCHE RUGGED TECHNOLOGY
- LOW GATE CHARGE
- HIGH CURRENT CAPABILITY
- 175 °C OPERATING TEMPERATURE

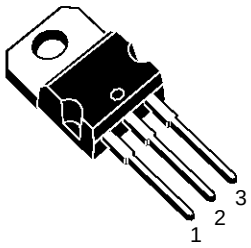

TO-220

APPLICATIONS

- SYNCROUNOUS RECTIFIERS
- HIGH CURRENT, HIGH SPEED SWITCHING
- DC-DC & DC-AC CONVERTER ABSOLUTE MAXIMUM RATINGS

INTERNAL SCHEMATIC DIAGRAM

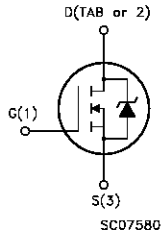

ABSOLUTE MAXIMUM RATINGS

Symbol	Parameter	Value	Unit
V_{DS}	Drain-source Voltage (V_{GS} = 0)	50	V
V_{DGR}	Drain- gate Voltage (R_{GS} = 20 kΩ)	50	V
V_{GS}	Gate-source Voltage	± 20	V
I_D	Drain Current (continuous) at T_c = 25 °C	80	A
I_D	Drain Current (continuous) at T_c = 100 °C	60	A
I_{DM}(•)	Drain Current (pulsed)	320	A
P_{tot}	Total Dissipation at T_c = 25 °C	150	W
	Derating Factor	1	W/°C
dV/dt(1)	Peak Diode Recovery voltage slope	5	V/ns
T_{stg}	Storage Temperature	-65 to 175	°C
T_j	Max. Operating Junction Temperature	175	°C

(•) Pulse width limited by safe operating area

(1) $I_{SD} \leq 60$ A, di/dt ≤ 200 A/ms, $V_{DD} \leq V_{(BR)DSS}$, $T_J \leq T_{JMAX}$

THERMAL DATA

$R_{thj\text{-}case}$	Thermal Resistance Junction-case	Max	1	°C/W
$R_{thj\text{-}amb}$	Thermal Resistance Junction-ambient	Max	62.5	°C/W
$R_{thc\text{-}sink}$	Thermal Resistance Case-sink	Typ	0.5	°C/W
T_l	Maximum Lead Temperature For Soldering Purpose		300	°C

AVALANCHE CHARACTERISTICS

Symbol	Parameter	Max Value	Unit
I_{AR}	Avalanche Current, Repetitive or Not-Repetitive (pulse width limited by T_j max, $\delta < 1\%$)	60	A
E_{AS}	Single Pulse Avalanche Energy (starting T_j = 25 °C, $I_D = I_{AR}$, V_{DD} = 25 V)	600	mJ

ELECTRICAL CHARACTERISTICS (T_{case} = 25 °C unless otherwise specified)

OFF

Symbol	Parameter	Test Conditions	Min.	Typ.	Max.	Unit
$V_{(BR)DSS}$	Drain-source Breakdown Voltage	I_D = 250 µA V_{GS} = 0	50			V
I_{DSS}	Zero Gate Voltage Drain Current (V_{GS} = 0) V_{DS} = Max Rating V_{DS} = Max Rating T_c = 125 °C				1 10	µA µA
I_{GSS}	Gate-body Leakage Current (V_{DS} = 0)	V_{GS} = ± 20 V			± 100	nA

ON (*)

Symbol	Parameter	Test Conditions	Min.	Typ.	Max.	Unit
$V_{GS(th)}$	Gate Threshold Voltage	$V_{DS} = V_{GS}$ I_D = 250 µA	2	3	4	V
$R_{DS(on)}$	Static Drain-source On Resistance	V_{GS} = 10V I_D = 40 A		0.007	0.009	Ω
$I_{D(on)}$	On State Drain Current	$V_{DS} > I_{D(on)} \times R_{DS(on)max}$ V_{GS} = 10 V	80			A

DYNAMIC

Symbol	Parameter	Test Conditions	Min.	Typ.	Max.	Unit
g_{fs} (*)	Forward Transconductance	$V_{DS} > I_{D(on)} \times R_{DS(on)max}$ I_D = 40 A		25		S
C_{iss} C_{oss} C_{rss}	Input Capacitance Output Capacitance Reverse Transfer Capacitance	V_{DS} = 25 V f = 1 MHz V_{GS} = 0		5900 900 230		pF pF pF

ELECTRICAL CHARACTERISTICS (continued)

SWITCHING ON

Symbol	Parameter	Test Conditions	Min.	Typ.	Max.	Unit
$t_{d(on)}$ t_r	Turn-on Time Rise Time	V_{DD} = 30 V I_D = 40 A R_G = 4.7 Ω V_{GS} = 10 V (see test circuit, figure 3)		32 160	42 200	ns ns
$(di/dt)_{on}$	Turn-on Current Slope	V_{DD} = 48 V I_D = 80 A R_G =50 Ω V_{GS} = 10 V (see test circuit, figure 5)		240		A/µs
Q_g Q_{gs} Q_{gd}	Total Gate Charge Gate-Source Charge Gate-Drain Charge	V_{DD} = 40 V I_D = 80 A V_{GS} = 10 V		230 30 60	280	nC nC nC

SWITCHING OFF

Symbol	Parameter	Test Conditions	Min.	Typ.	Max.	Unit
$t_{r(Voff)}$ t_f t_c	Off-voltage Rise Time Fall Time Cross-over Time	V_{DD} = 48 V I_D = 40 A R_G = 4.7 Ω V_{GS} = 10 V (see test circuit, figure 5)		35 175 240	46 230 300	ns ns ns

SOURCE DRAIN DIODE

Symbol	Parameter	Test Conditions	Min.	Typ.	Max.	Unit
I_{SD} I_{SDM}(•)	Source-drain Current Source-drain Current (pulsed)				80 320	A A
V_{SD} (*)	Forward On Voltage	I_{SD} = 80 A V_{GS} = 0			1.5	V
t_{rr} Q_{rr} I_{RRM}	Reverse Recovery Time Reverse Recovery Charge Reverse Recovery Current	I_{SD} = 80 A di/dt = 100 A/µs V_R = 30 V T_j = 150 °C (see test circuit, figure 5)		125 0.6 10		ns µC A

(*) Pulsed: Pulse duration = 300 µs, duty cycle 1.5%

(•) Pulse width limited by safe operating area

Safe Operating Area

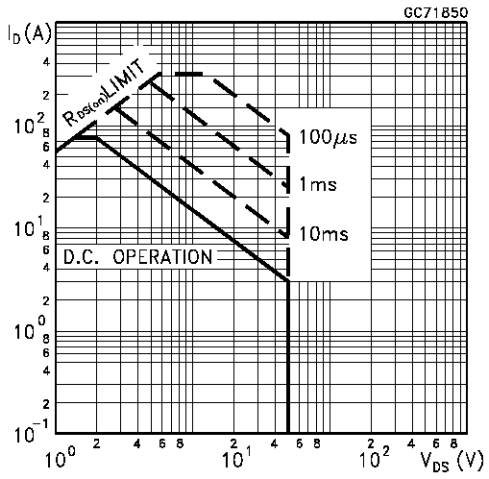

Thermal Impedance

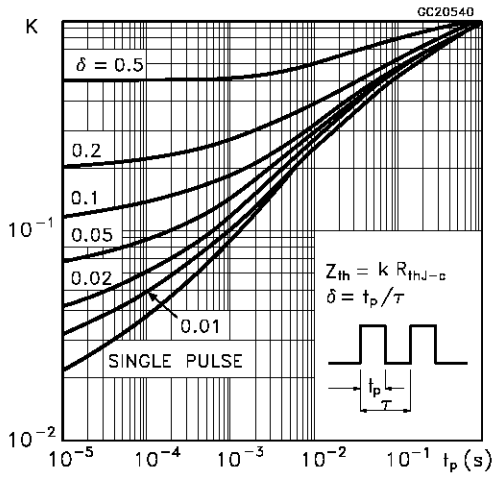

Derating Curve

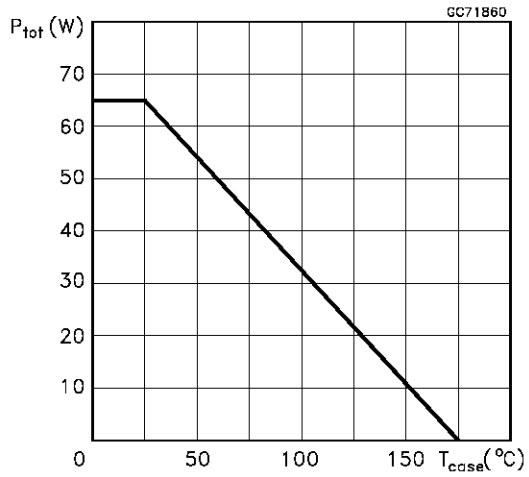

Output Characteristics

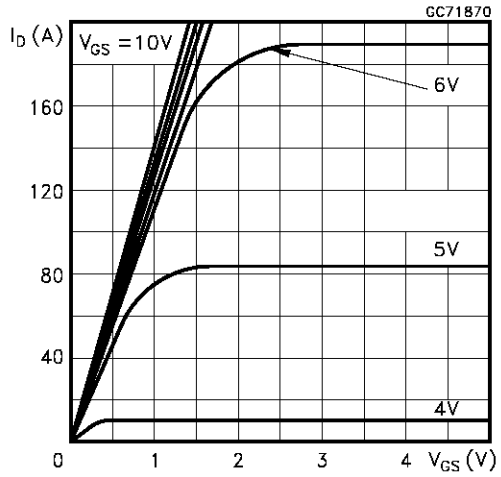

Transfer Characteristics

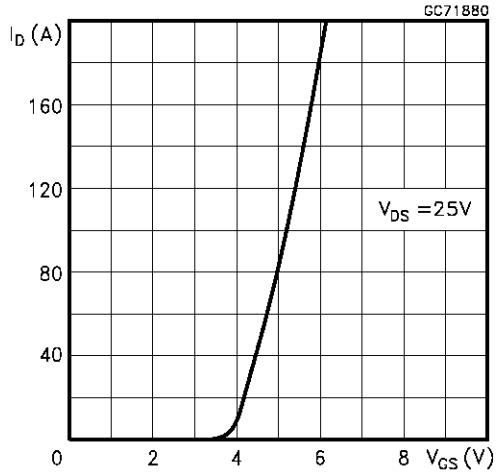

Transconductance

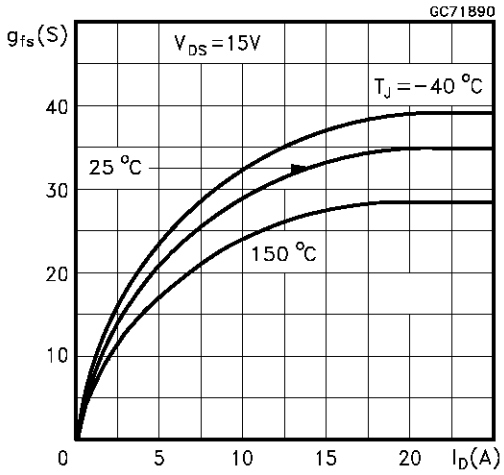

Static Drain-source On Resistance

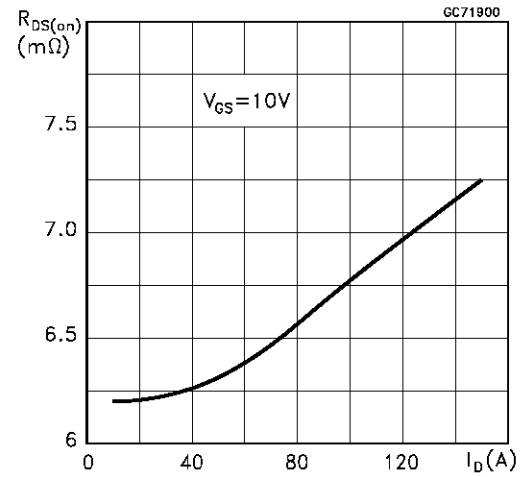

Gate Charge vs Gate-source Voltage

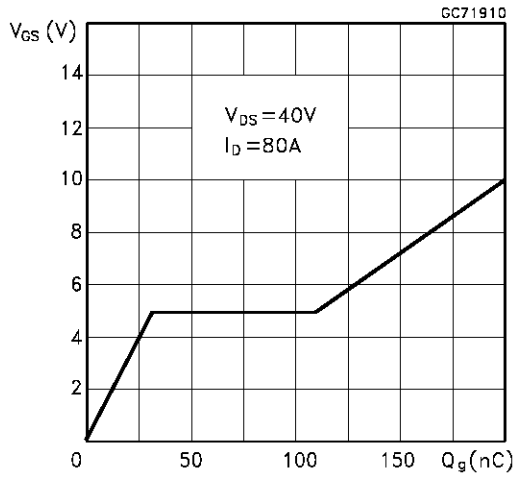

Capacitance Variations

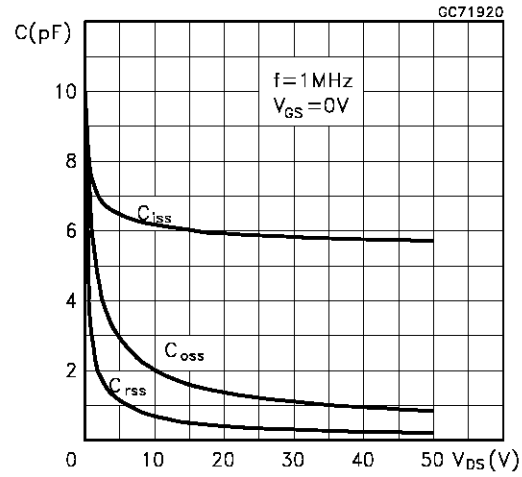

Normalized Gate Threshold Voltage vs Temperature

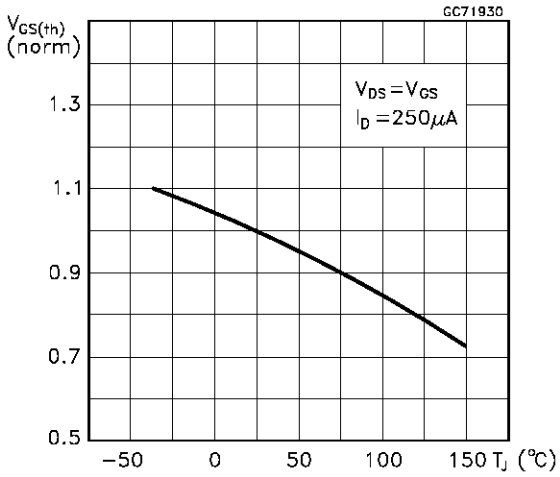

Normalized On Resistance vs Temperature

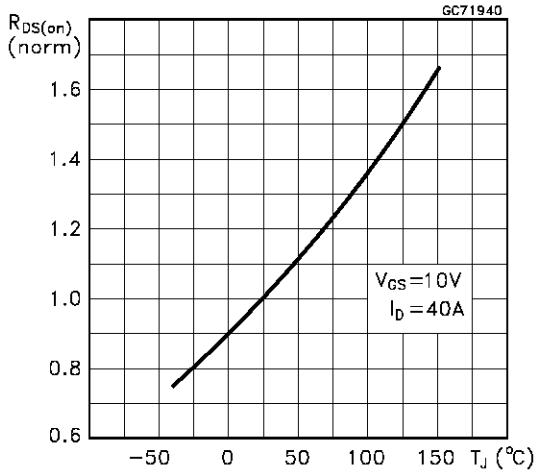

Turn-on Current Slope

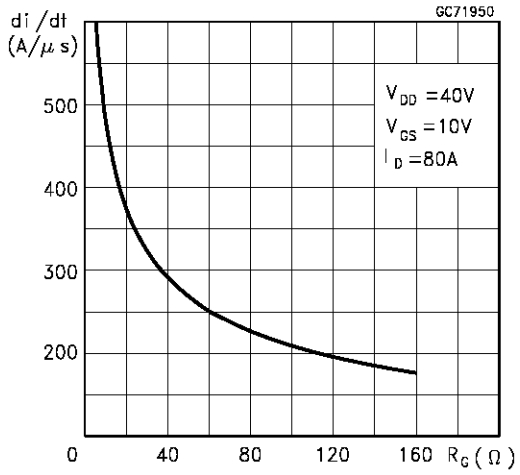

Turn-off Drain-source Voltage Slope

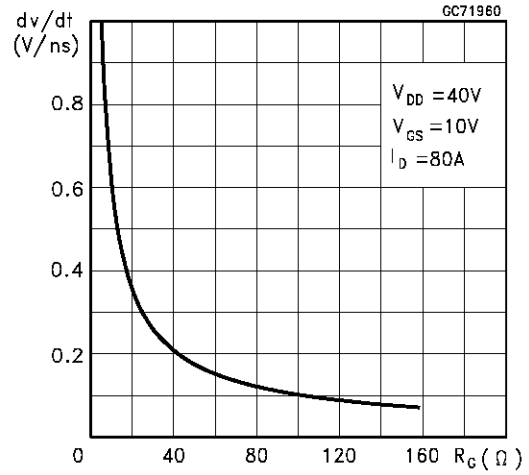

Cross-over Time

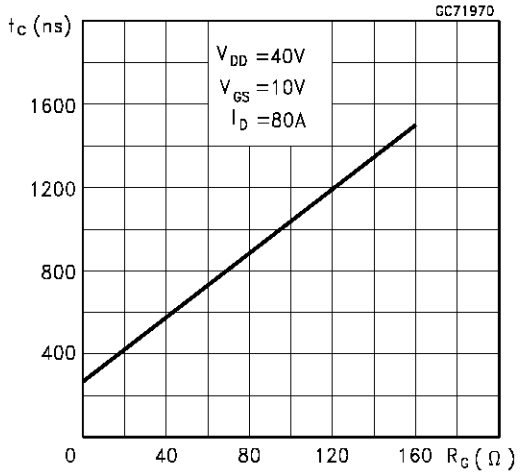

Switching Safe Operating Area

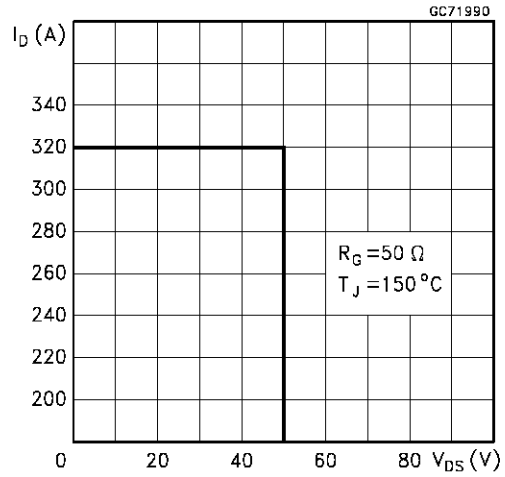

Accidental Overload Area

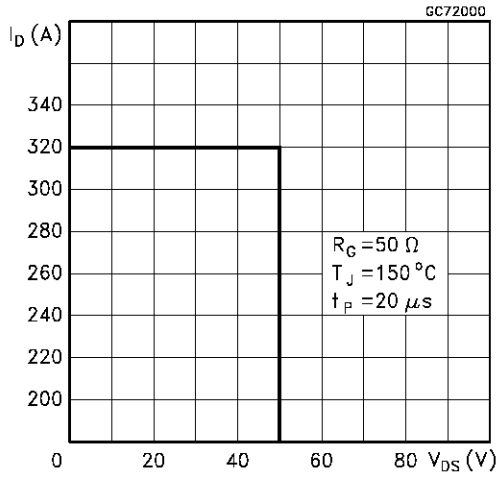

Source-drain Diode Forward Characteristics

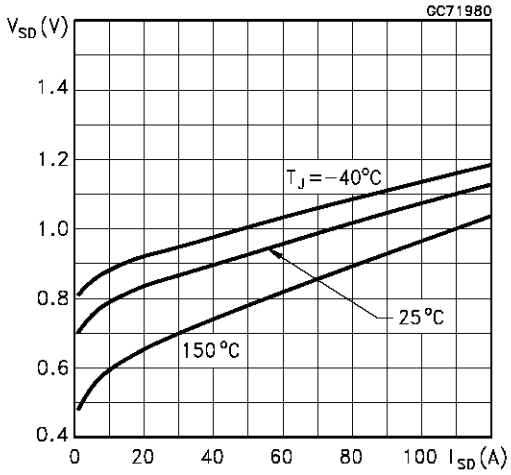

Fig. 1: Unclamped Inductive Load Test Circuit

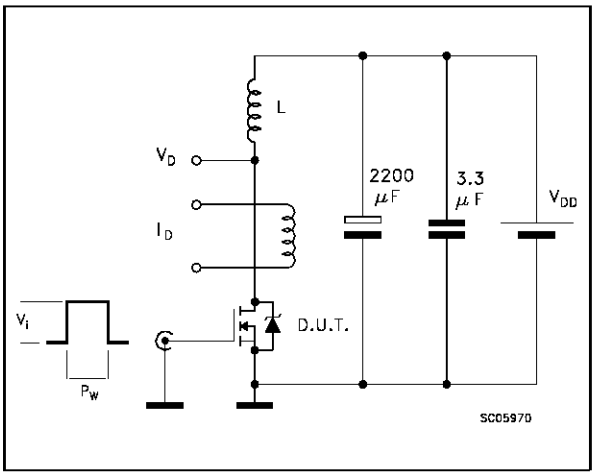

Fig. 2: Unclamped Inductive Waveform

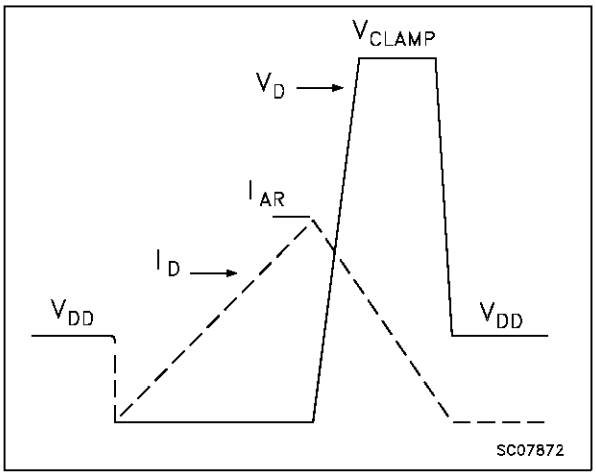

Fig. 3: Switching Times Test Circuits For Resistive Load

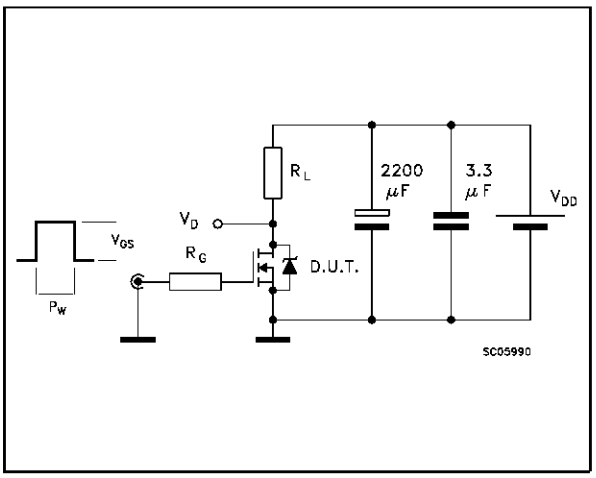

Fig. 4: Gate Charge test Circuit

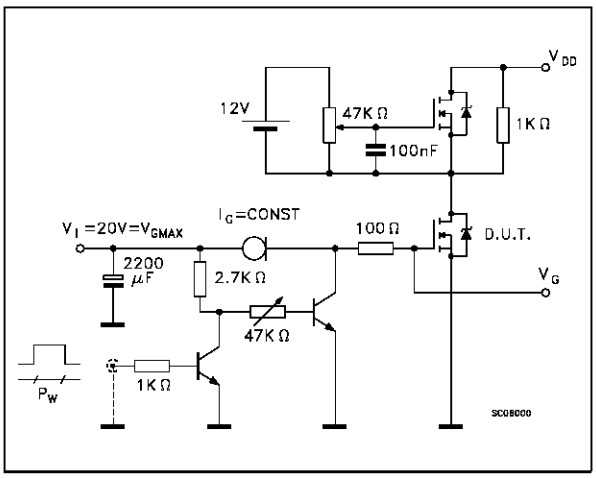

Fig. 5: Test Circuit For Inductive Load Switching And DIode Recovery Times

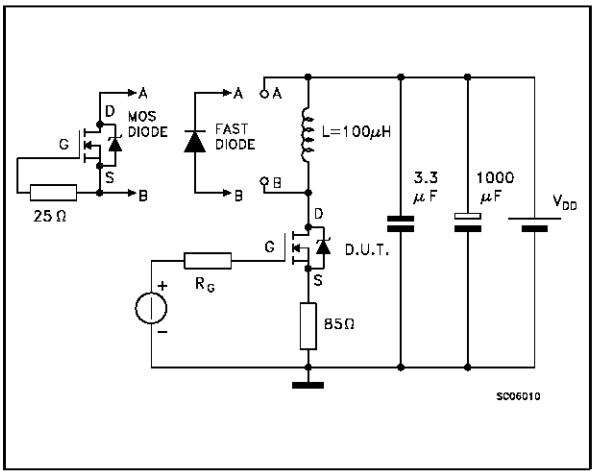

TO-220 MECHANICAL DATA

DIM.	mm			inch		
	MIN.	TYP.	MAX.	MIN.	TYP.	MAX.
A	4.40		4.60	0.173		0.181
C	1.23		1.32	0.048		0.051
D	2.40		2.72	0.094		0.107
D1		1.27			0.050	
E	0.49		0.70	0.019		0.027
F	0.61		0.88	0.024		0.034
F1	1.14		1.70	0.044		0.067
F2	1.14		1.70	0.044		0.067
G	4.95		5.15	0.194		0.203
G1	2.4		2.7	0.094		0.106
H2	10.0		10.40	0.393		0.409
L2		16.4			0.645	
L4	13.0		14.0	0.511		0.551
L5	2.65		2.95	0.104		0.116
L6	15.25		15.75	0.600		0.620
L7	6.2		6.6	0.244		0.260
L9	3.5		3.93	0.137		0.154
DIA.	3.75		3.85	0.147		0.151

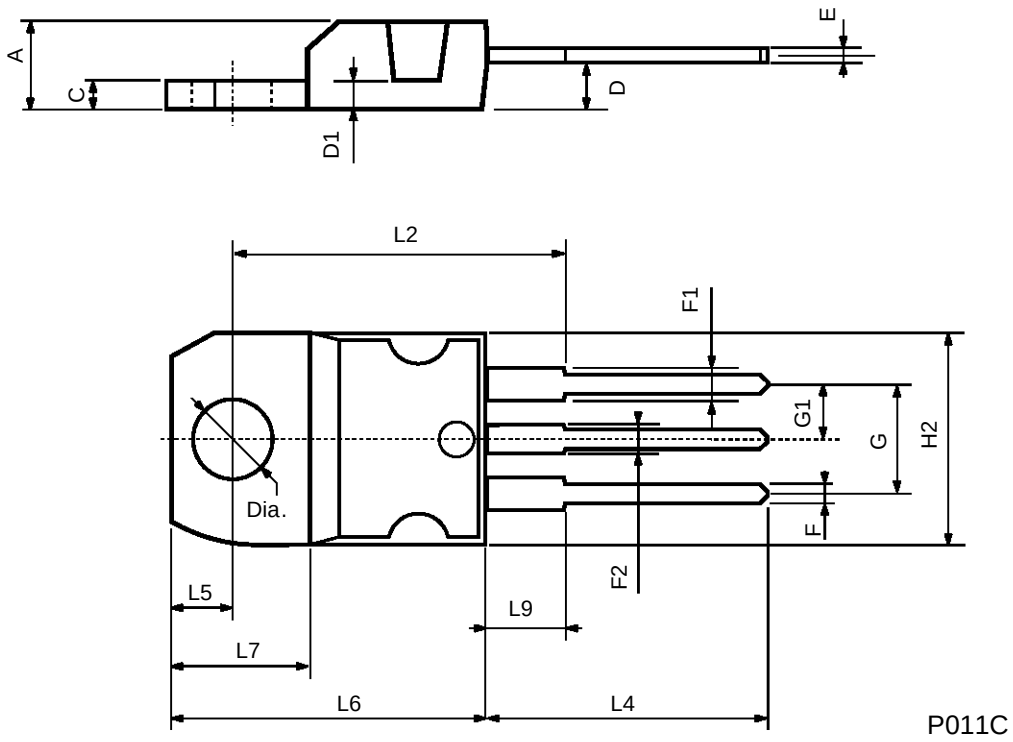

Information furnished is believed to be accurate and reliable. However, SGS-THOMSON Microelectronics assumes no responsability for the consequences of use of such information nor for any infringement of patents or other rights of third parties which may results from its use. No license is granted by implication or otherwise under any patent or patent rights of SGS-THOMSON Microelectronics. Specifications mentioned in this publication are subject to change without notice. This publication supersedes and replaces all information previously supplied.
SGS-THOMSON Microelectronics products are not authorized for use as critical components in life support devices or systems without express written approval of SGS-THOMSON Microelectonics.

© 1996 SGS-THOMSON Microelectronics - Printed in Italy - All Rights Reserved

SGS-THOMSON Microelectronics GROUP OF COMPANIES
Australia - Brazil - Canada - China - France - Germany - Hong Kong - Italy - Japan - Korea - Malaysia - Malta - Morocco - The Netherlands - Singapore - Spain - Sweden - Switzerland - Taiwan - Thailand - United Kingdom - U.S.A
. . .