STP16CP596

Low voltage 16-Bit, constant current LED sink driver

Features

- Low voltage power supply down to 3V
- 16 constant current output channels
- Adjustable output current through external resistor
- Serial data IN/parallel data OUT
- Serial OUT changes state on the falling edges of clock
- 3.3V micro driver-able
- Output current: 3-50 mA
- 25MHz clock frequency
- Available in high thermal efficiency TSSOP exposed pad

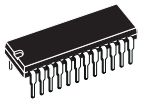

DIP-24

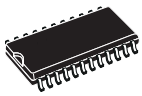

SO-24

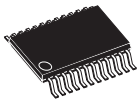

TSSOP24



TSSOP24 (exposed pad)

Description

The STP16CP596 is a monolithic, low voltage, low current power 16-bit shift register designed for LED panel displays. The STP16CP596 contains a 16-bit serial-IN, parallel-OUT shift register that feeds a 16-bit, D-type storage register. In the output stage, sixteen regulated current sources were designed to provide 3-50mA constant current to drive the LEDs.

Compared with the STPIC6C595, the device provides great flexibility and improved performance in LED panel system design.

Users can adjust the STP16CP596 output current with an external resistor, controlling the LEDs' light intensity.

The STP16CP596 guarantees a 16V output driving capability, allowing users to connect more LEDs in series. The high clock frequency (25MHz) also satisfies the high volume data transmission system requirement. The 3.3V voltage supply is useful for applications that interface any microprocessor from 3.3V.

Compared with a standard TSSOP package, the TSSOP exposed pad increases heat dissipation capability by a factor of 2:5.

Obsolete Product(s) - Obsolete Product(s)

Order codes

Part number	Package	Packaging
STP16CP596B1R	DIP-24	15 parts per tube
STP16CP596M	SO-24 (Tube)	40 parts per tube
STP16CP596MTR	SO-24 (Tape & Reel)	1000 parts per reel
STP16CP596TTR	TSSOP24 (Tape & Reel)	2500 parts per reel
STP16CP596XTTR	TSSOP24 Exposed-Pad (Tape & Reel)	2500 parts per reel

Contents

1 Summary description 3

1.1 Pin connection and description 3

2 Equivalent circuit of inputs and outputs 5

2.1 Truth table 7

2.2 Timing diagram 8

3 Waveforms 9

4 Maximum rating 11

4.1 Thermal data 11

4.2 Recommended operating conditions 12

5 Electrical characteristics 13

6 Switching characteristics 14

7 Test circuit 15

8 Typical characteristics 16

9 Package mechanical data 18

10 Revision history 25

Obsolete Product(s) - Obsolete Product(s)
Obsolete Product(s) - Obsolete Product(s)

1 Summary description

Table 1. Current accuracy

Output Voltage	Current accuracy		Between ICs
	Output Current	Between bits	
≥ 0.1V	3mA/V_{CC} = 5V	± 3%	± 6%
≥ 0.15V	5mA/V_{CC} = 5V	± 2%	± 6%
≥ 0.25V	10mA/V_{CC} = 5V	± 2%	± 6%
≥ 0.5V	20mA/V_{CC} = 5V	± 1%	± 6%
≥ 1.2V	40mA/V_{CC} = 5V	± 1%	± 6%
≥ 1.4V	50mA/V_{CC} = 5V	± 1%	± 6%

1.1 Pin connection and description

Figure 1. Connections diagram

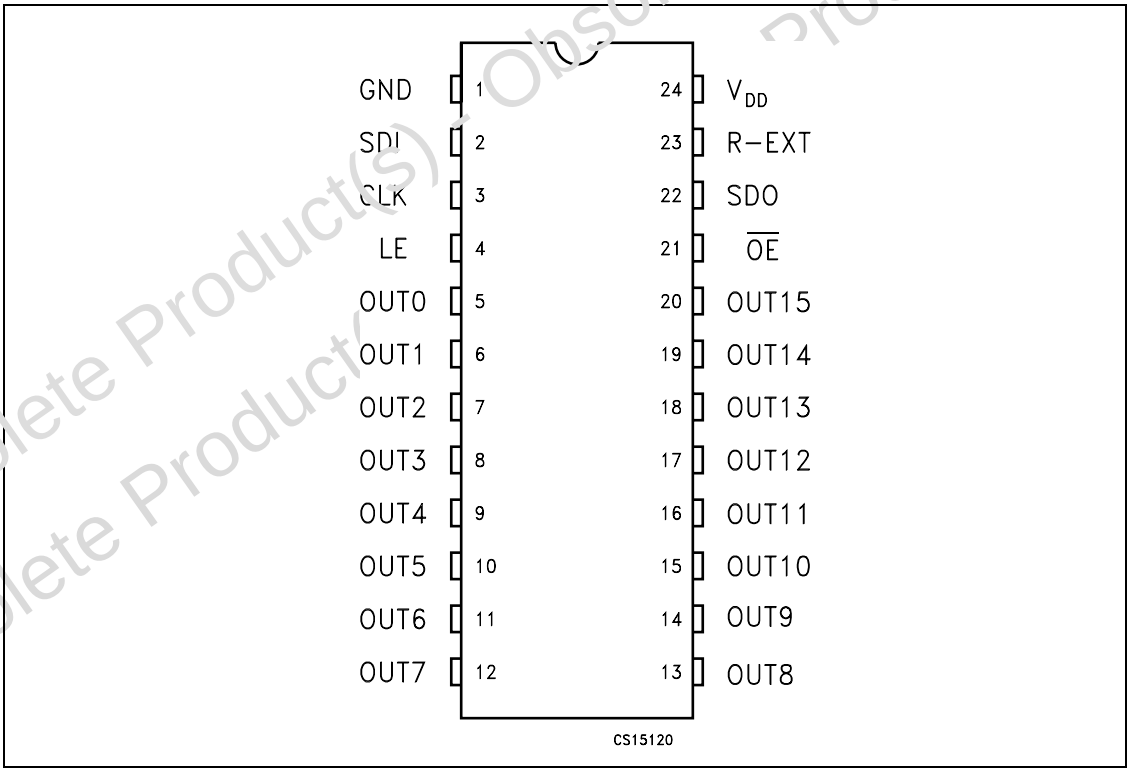

Note: The Exposed-Pad is electrically not connected

Obsolete Product(s) - Obsolete Product(s)

Table 2. Pin description

PIN N°	Symbol	Name and function
1	GND	Ground Terminal
2	SDI	Serial data input terminal
3	CLK	Clock input terminal
4	LE	Latch input terminal
5-20	OUT 0-15	Output terminal
21	$\overline{OE}$	Input terminal of output enable (active low)
22	SDO	Serial data out terminal
23	R-EXT	Input terminal of an external resistor for constant current programing
24	V_{DD}	Supply voltage terminal

Obsolete Product(s) - Obsolete Product(s)
Obsolete Product(s) - Obsolete Product(s)

2 Equivalent circuit of inputs and outputs

Figure 2. $\overline{OE}$ Terminal

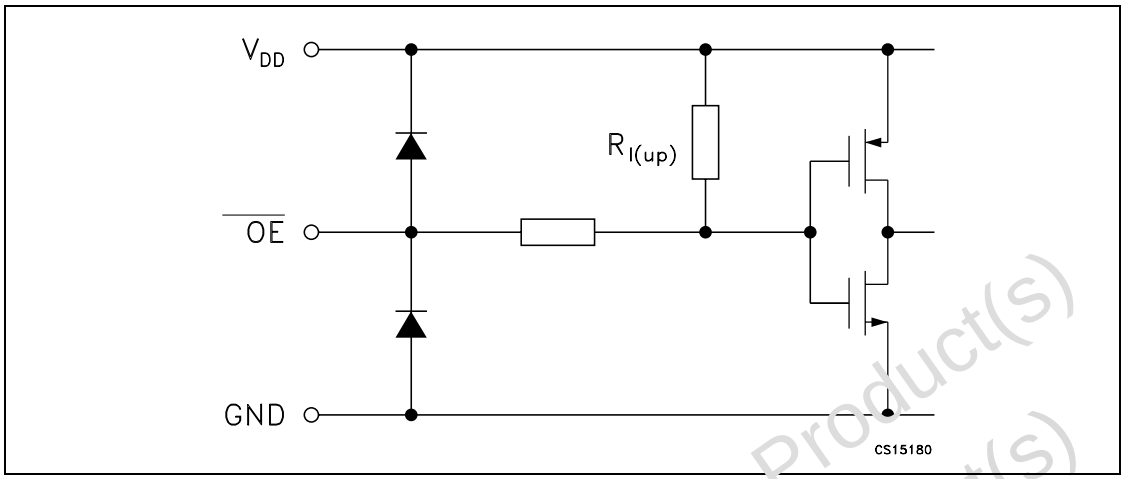

Figure 3. LE Terminal

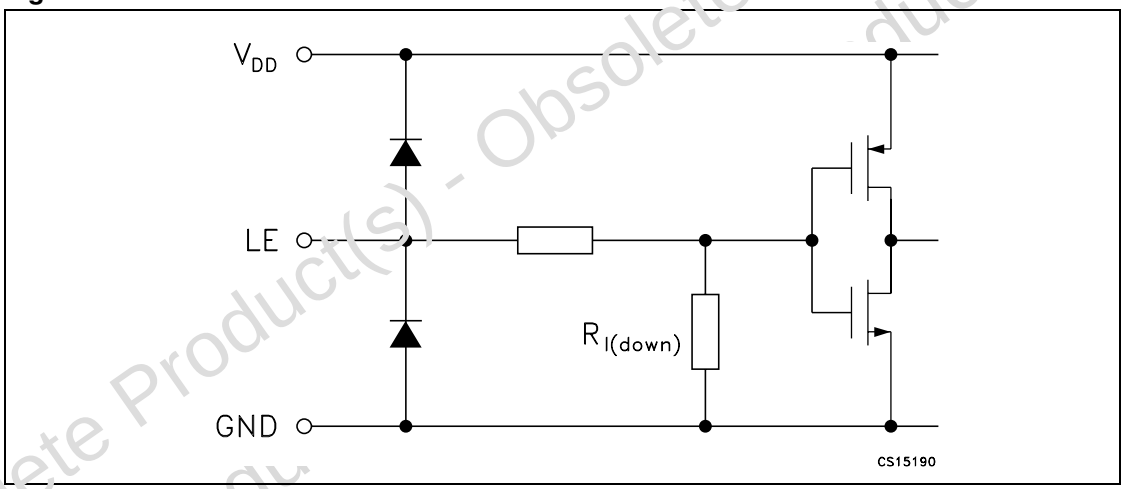

Obsolete Product(s) - Obsolete Product(s)
Obsolete Produ

Figure 4. CLK, SDI Terminal

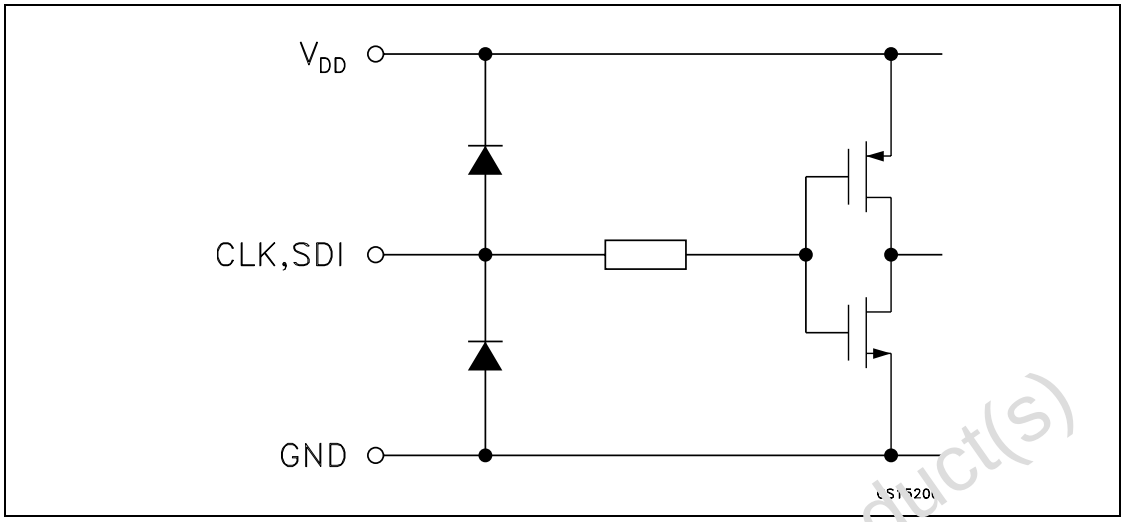

Figure 5. SDO Terminal

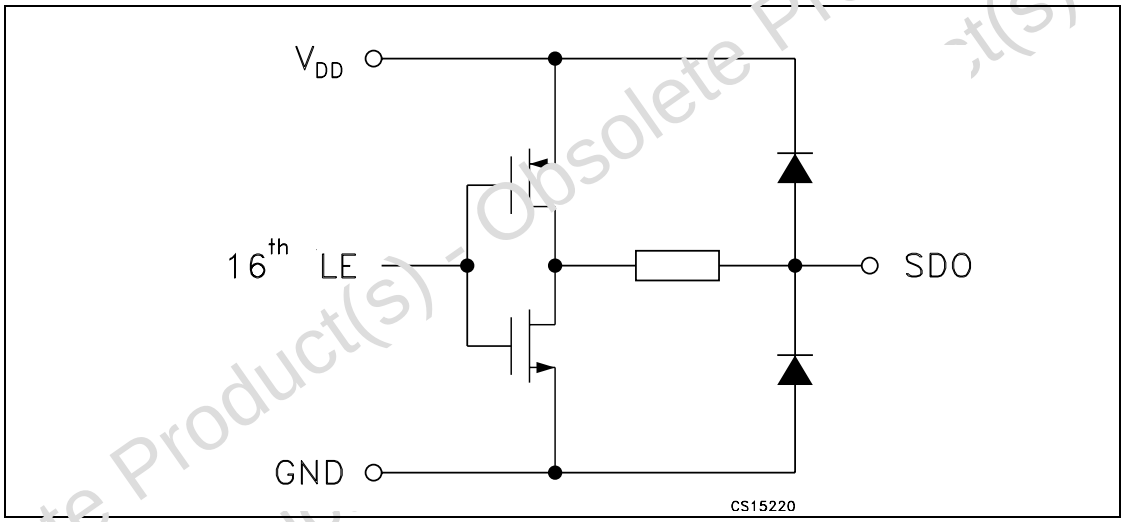

Obsolete Product(s) - Obsolete Product(s)

Figure 6. Block diagram - normal mode

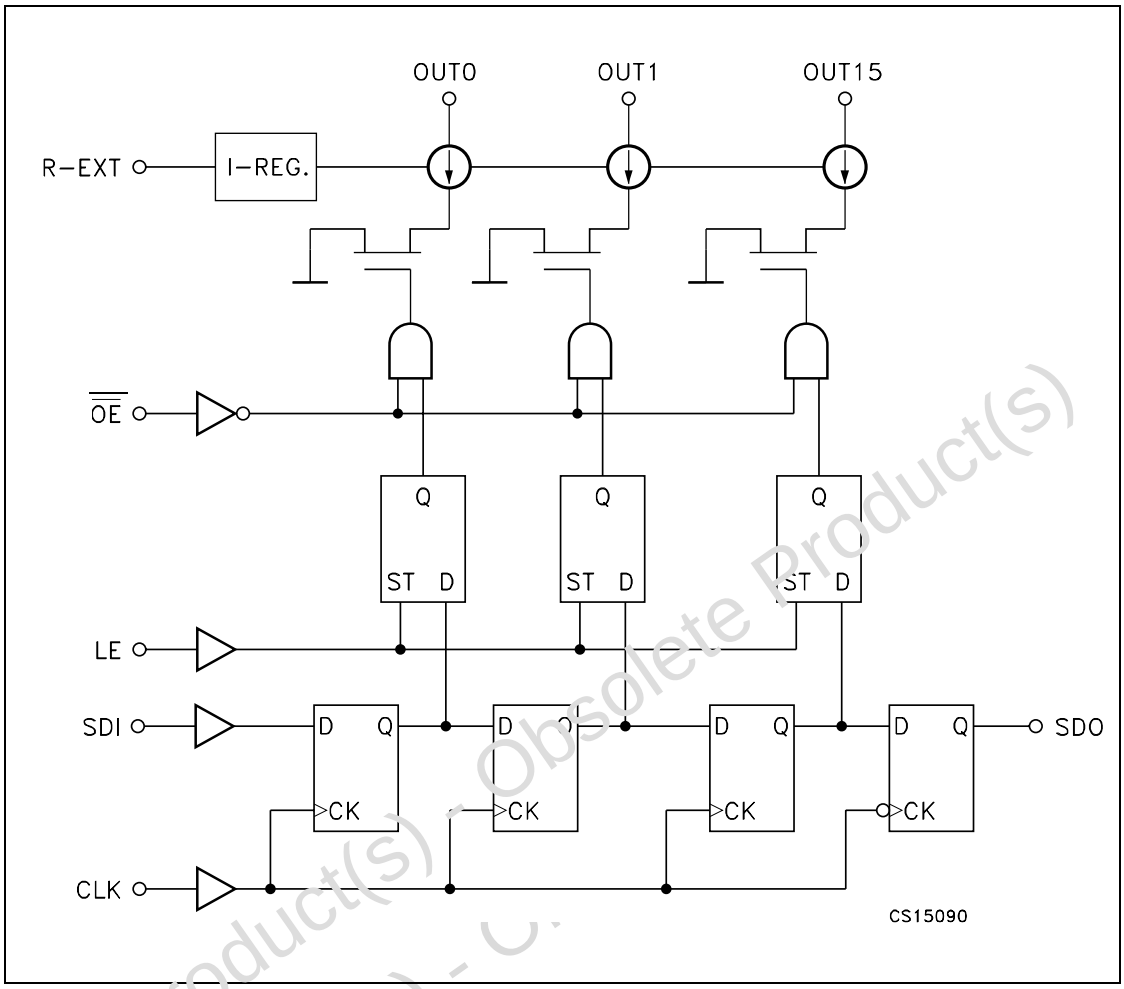

2.1 Truth table

Table 3. Truth table

Clock	LE	$\overline{OE}$	SERIAL-IN	OUT0 ..... OUT7 ..... OUT15	SDO
↑	H	L	Dn	Dn ..... Dn -7 ..... Dn -15	Dn -15
↑	L	L	Dn + 1	No Change	Dn -14
↑	H	L	Dn + 2	Dn -2 ..... Dn -5 ..... Dn -13	Dn -13
↓	X	L	Dn + 3	Dn -2 ..... Dn -5 ..... Dn -13	Dn -13
↓	X	L	Dn + 3	ON	Dn -13

Note: OUT0 to OUT15 = ON when Dn = H; OUT0 to OUT15 = OFF when Dn = L.

Obsolete Product(s) - Obsolete Product(s)

2.2 Timing diagram

Figure 7. Timing diagram - normal mode

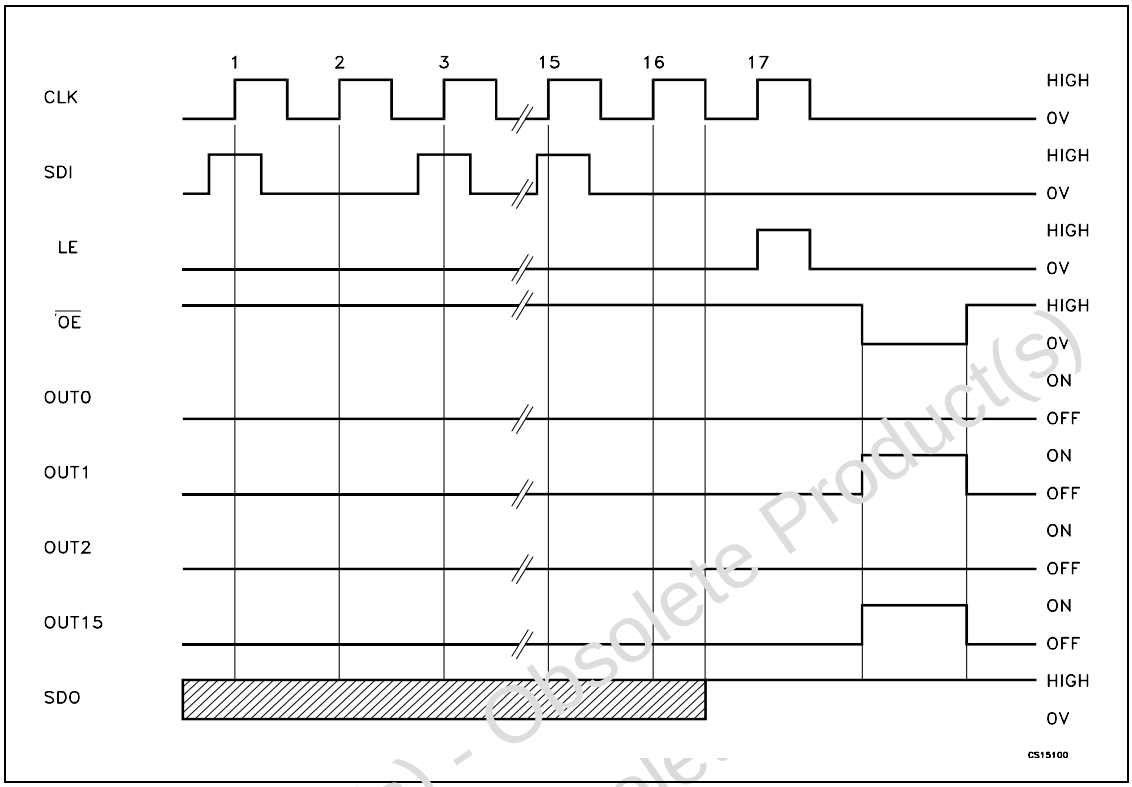

Note: Note: The latches circuit holds data when the LE terminal is Low.

When the LE terminal is at High level, latch circuit doesn't hold the data it passes from the input to the output.

When the $\overline{OE}$ terminal is at Low level, output terminals OUT0 to OUT15 respond to the data, either ON or OFF.

When the $\overline{OE}$ terminal is at High level, it switches off all the data on the output terminal.

Obsolete Product(s) - Obsolete Product(s)

3 Waveforms

Figure 8. Clock, Serial-IN, Serial-OUT

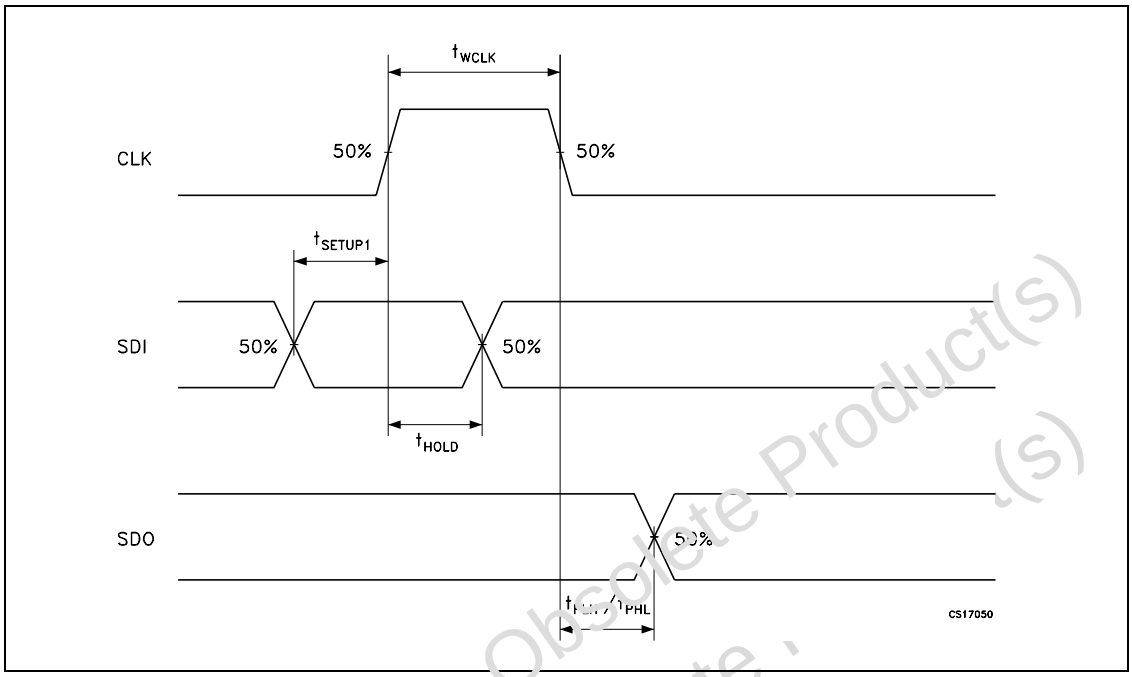

Figure 9. Clock, Serial-In, Latch, Enable, Outputs

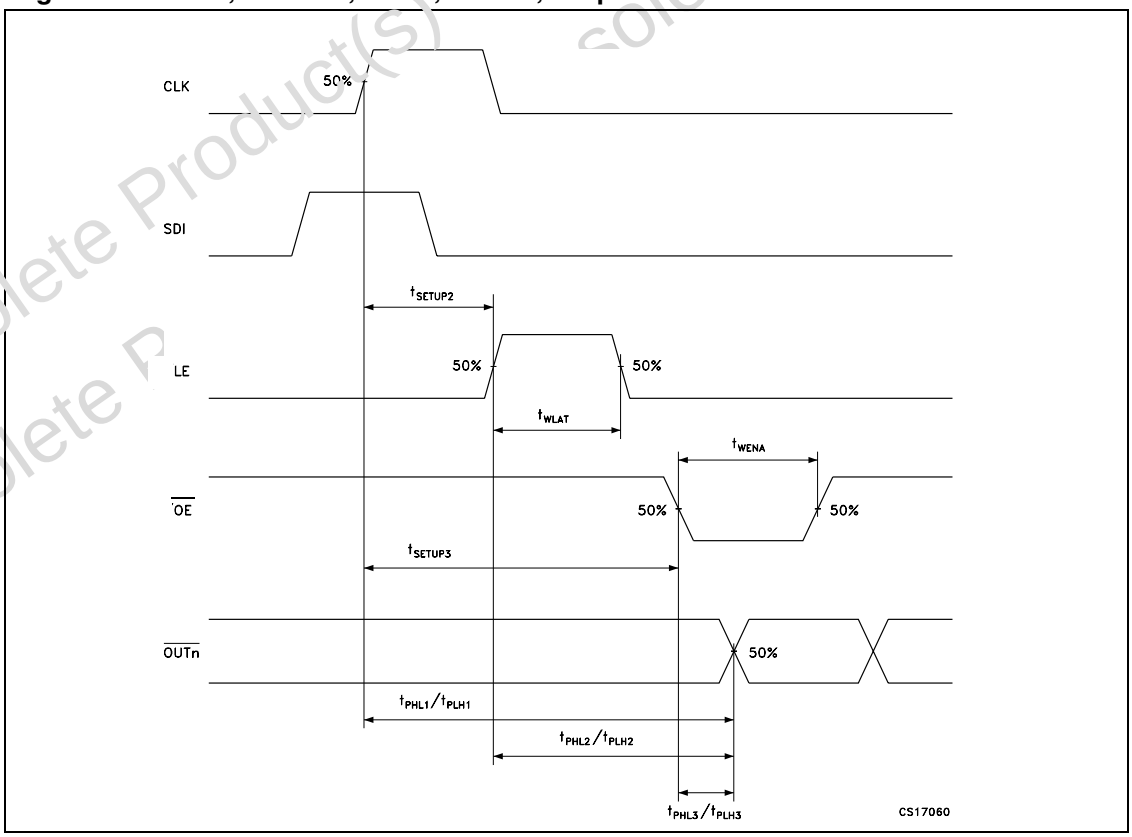

Obsolete Product(s) - Obsolete Product(s)

Figure 10. Outputs

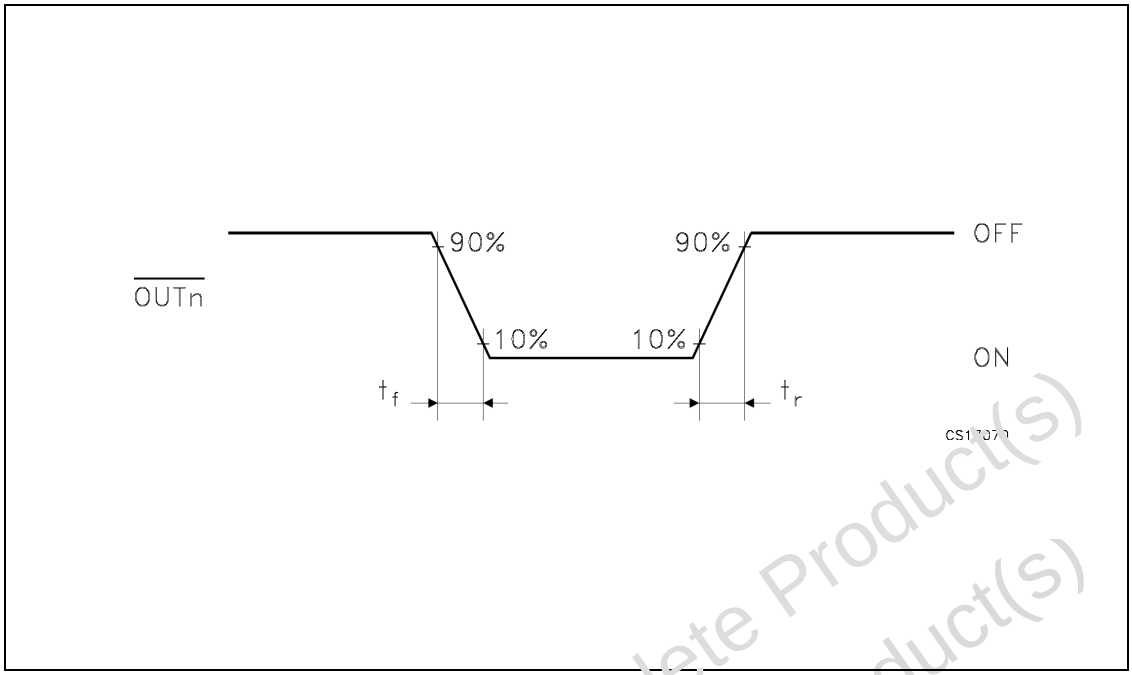

Obsolete Product(s) - Obsolete Product(s)
Obsolete Product(s) - Obsolete Product(s)

4 Maximum rating

Stressing the device above the rating listed in the “Absolute Maximum Ratings” table may cause permanent damage to the device. These are stress ratings only and operation of the device at these or any other conditions above those indicated in the Operating sections of this specification is not implied. Exposure to Absolute Maximum Rating conditions for extended periods may affect device reliability. Refer also to the STMicroelectronics SURE Program and other relevant quality documents.

Table 4. Absolute maximum ratings

Symbol	Parameter	Value	Unit
V_{DD}	Supply Voltage	0 to 7	V
V_O	Output Voltage	-0.5 to 16	V
I_O	Output Current	50	mA
V_I	Input Voltage	-0.4 to V_{DD}+0.4	V
I_{GND}	GND Terminal Current	800	mA
f_{CLK}	Clock Frequency	25	MHz
T_{OPR}	Operating Temperature Range	-40 to +125	°C
T_{STG}	Storage Temperature Range	-65 to +150	°C

4.1 Thermal data

Table 5. Thermal data

Symbol	Parameter	DIP-24	SO-24	TSSOP-24	TSSOP-24(1) (exposed pad)	Unit
R_{thJA}	Thermal Resistance Junction-ambient	60	75	85	37.5	°C/W

1. The Exposed-Pad should be soldered to the PBC to realize the thermal benefits

Obsolete Product(s) - Obsolete Product(s)
Obsolete Product(s) - Obsolete Product(s)

4.2 Recommended operating conditions

Table 6. Recommended operating conditions

Symbol	Parameter	Test conditions	Min.	Typ.	Max.	Unit
V_{DD}	Supply Voltage		3.0		5.5	V
V_O	Output Voltage				16.0	V
I_O	Output Current	OUTn	3		50	mA
I_{OH}	Output Current	Serial OUT			+1	mA
I_{OL}	Output Current	Serial OUT			-1	mA
V_{IH}	Input Voltage		$0.7V_{DD}$		$V_{DD}+0.3$	V
V_{IL}	Input Voltage		-0.3		$0.3V_{DD}$	V
t_{wLAT}	LE Pulse Width	V_{DD} = 3.3V	20			ns
t_{wCLK}	CLK Pulse Width		20			ns
t_{wEN}	$\overline{OE}$ Pulse Width		400			ns
$t_{SETUP(D)}$	Setup Time for DATA		20			ns
$t_{HOLD(D)}$	Hold Time for DATA		15			ns
$t_{REM(L)}$	Removal Time for LATCH		15			ns
f_{CLK}	Clock Frequency	Cascade Operation(1)			25	MHz

1. If the device is connected in cascade, it may not be possible achieve the maximum data transfer. Please considered the timings carefully

Obsolete Product(s) - Obsolete Product(s)
Obsolete Product(s) - Obsolete Product(s)

5 Electrical characteristics

Table 7. Electrical characteristics (V_{DD} = 3.3V to 5V, T = 25°C, unless otherwise specified.)

Symbol	Parameter	Test conditions	Min.	Typ.	Max.	Unit
V_{IH}	Input Voltage High Level		0.7V_{DD}		V_{DD}	V
V_{IL}	Input Voltage Low Level		GND		0.3V_{DD}	V
I_{OH}	Output Leakage Current	V_{OH} = 16 V			10	µA
V_{OL}	Output Voltage (Serial OUT)	I_{OL} = 1mA			0.4	V
V_{OH}	Output Voltage (Serial OUT)	I_{OH} = -1mA	V_{DD}- 0.4V			V
I_{OL1A}	Output Current	V_O = ≥0.2V, R_{EXT} = 6.2KΩ, V_{DD} = 3.3V	2.95	3	3.15	mA
I_{OL2A}		V_O = ≥0.5V, R_{EXT} = 1KΩ, V_{DD} = 3.3V	19.6	20	20.4	mA
ΔI_{OL1A}	Output Current Error between bit (All Outputs ON)	V_O = ≥0.2V, R_{EXT} = 6.2KΩ, V_{DD} = 3.3V		± 4	± 6	%
ΔI_{OL2A}		V_O = ≥0.5V, R_{EXT} = 1KΩ, V_{DD} = 3.3V		± 2	± 3	%
I_{OL1B}	Output Current	V_O = ≥0.2V, R_{EXT} = 6.2KΩ, V_{DD} = 5V	2.9	3	3.1	mA
I_{OL2B}		V_O = ≥0.5V, R_{EXT} = 1KΩ, V_{DD} = 5V	19.6	20	20.4	mA
ΔI_{OL1B}	Output Current Error between bit (All Output ON)	V_O = ≥0.2V, R_{EXT} = 6.2KΩ, V_{DD} = 5V		± 2	± 3.5	%
ΔI_{OL2B}		V_O = ≥0.5V, R_{EXT} = 1KΩ, V_{DD} = 5V		± 1	± 2	%
$R_{SIN(up)}$	Pull-up Resistor		150	300	600	KΩ
$R_{SIN(down)}$	Pull-down Resistor		100	200	400	KΩ
$I_{DD(OFF1)}$	Supply Current (OFF)	R_{EXT} = OPEN, OUT 0 to 15 = OFF		0.3		mA
$I_{DD(OFF2)}$		R_{EXT} = 6.2KΩ, OUT 0 to 15 = OFF		1		
$I_{DD(OFF3)}$		R_{EXT} = 1KΩ, OUT 0 to 15 = OFF		3		
$I_{DD(ON1)}$	Supply Current (ON)	R_{EXT} = 6.2KΩ, OUT 0 to 15 = ON		1		
$I_{DD(ON2)}$		R_{EXT} = 1KΩ, OUT 0 to 15 = ON		3		

Obsolete Product(s) - Obsolete Product(s)

6 Switching characteristics

Table 8. Switching characteristics (V_{DD} = 3.3V, T = 25°C, unless otherwise specified.)

Symbol	Parameter	Test conditions	Min.	Typ.	Max.	Unit
t_{PLH1}	Propagation Delay Time, CLK-$\overline{OUT}$n, LE = H, $\overline{OE}$ = L			250	280	ns
t_{PLH2}	Propagation Delay Time, LE-$\overline{OUT}$n, $\overline{OE}$ = L			220	250	ns
t_{PLH3}	Propagation Delay Time, $\overline{OE}$-$\overline{OUT}$n, LE = H			200	250	ns
t_{PLH}	Propagation Delay Time, CLK-SDO	V_{DD} = 3.3V, V_{IH} = V_{DD}, V_{IL} = GND, C_L = 13pF, I_O = 40mA, V_L = 3 V, R_{EXT} = 470 Ω, R_L = 65 Ω		25	50	ns
t_{PHL1}	Propagation Delay Time, CLK-$\overline{OUT}$n, LE = H, $\overline{OE}$ = L			25	50	ns
t_{PHL2}	Propagation Delay Time, LE-$\overline{OUT}$n, $\overline{OE}$ = L			25	50	ns
t_{PHL3}	Propagation Delay Time, $\overline{OE}$-$\overline{OUT}$n, LE = H			50	70	ns
t_{PHL}	Propagation Delay Time, CLK-SDO			25	50	ns
t_{ON}	Output Rise Time	10 ~ 90% of voltage waveform		260	400	ns
t_{OFF}	Output Fall Time	90 ~ 10% of voltage waveform		50	80	ns

Note: 1 To prevent current overshoot, during the Outputs switching, the overhead output voltage must be less than 1V.

2 The Maximum suggested swithching frequency is up tp 10KHz.

Obsolete Product(s) - Obsolete Product(s)

7 Test circuit

Figure 11. DC Characteristics

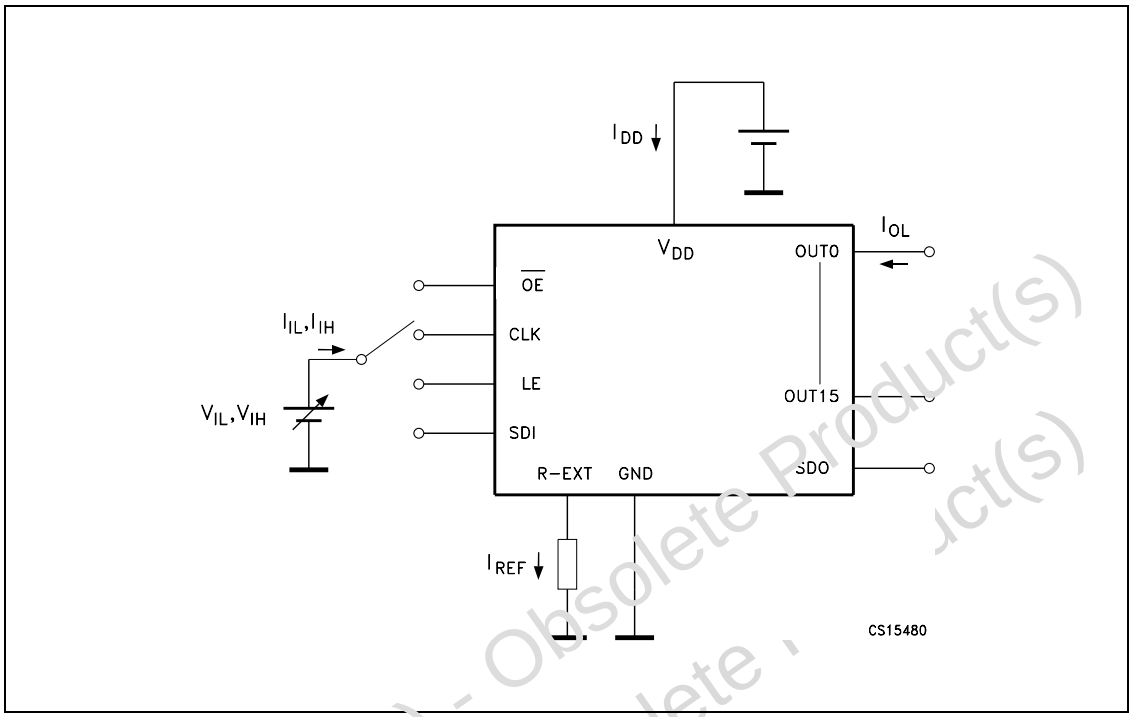

Figure 12. AC Characteristics

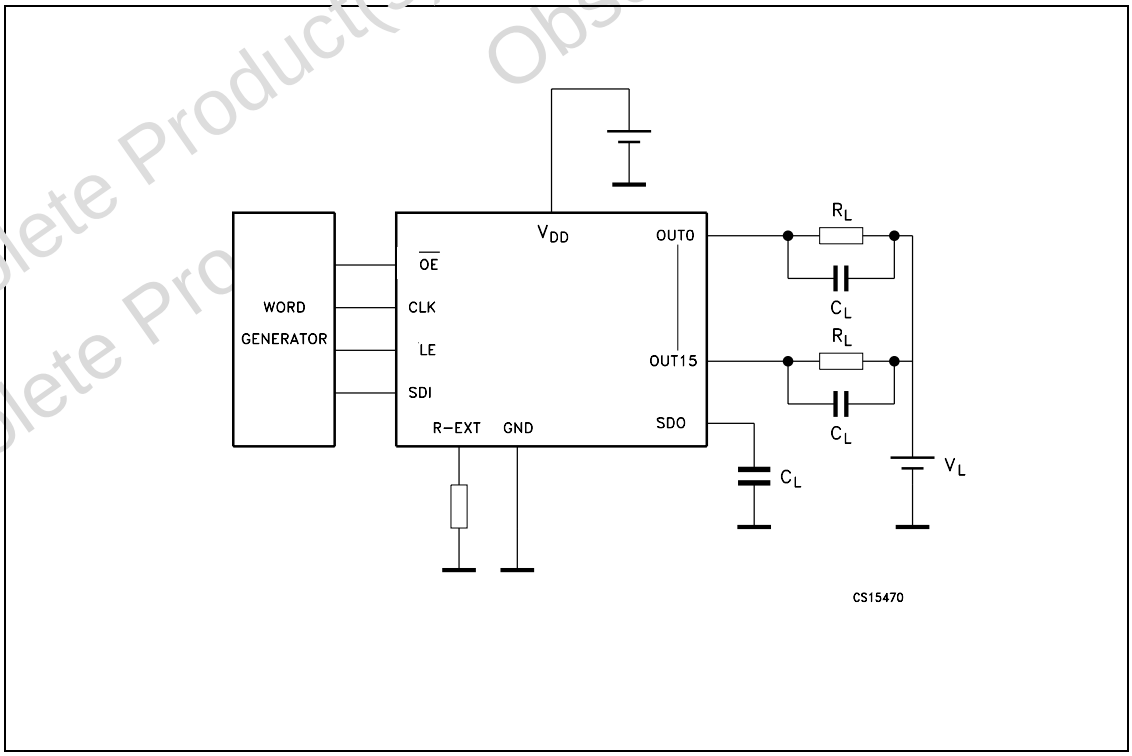

Obsolete Product(s) - Obsolete Product(s)

8 Typical characteristics

Figure 13. Output current-R_{EXT} resistor

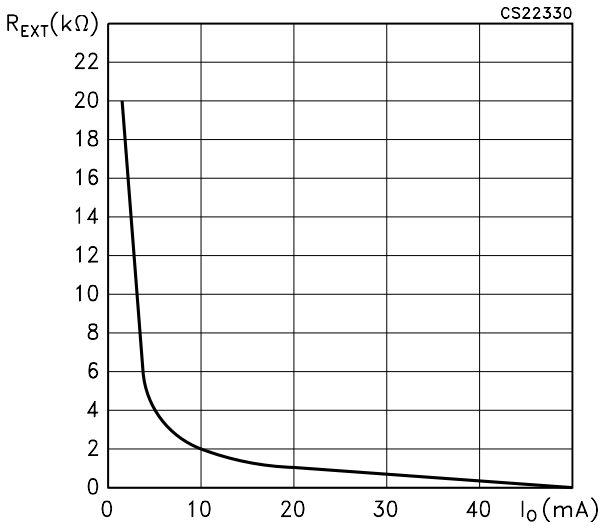

Figure 14. Power dissipation vs. temperature package

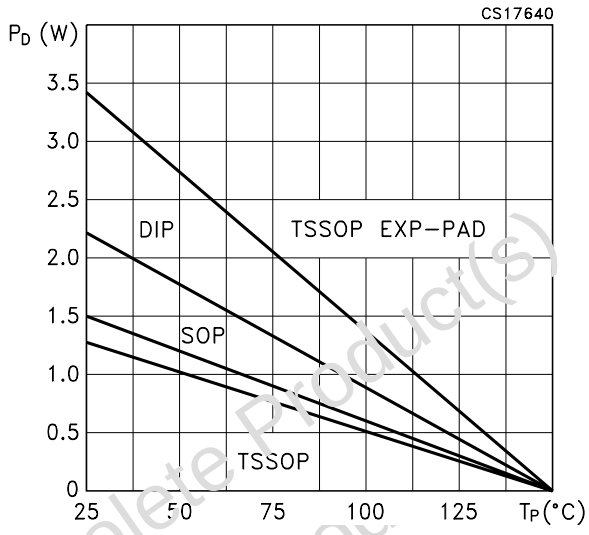

Figure 15. Output current vs. drop voltage

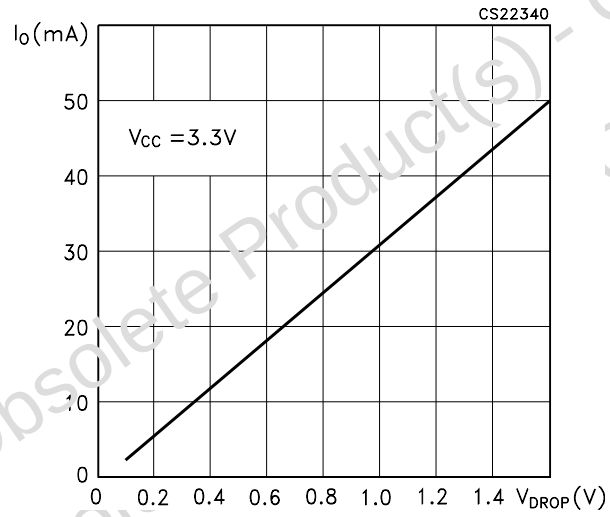

Figure 16. Output current vs ±ΔIOL(%)

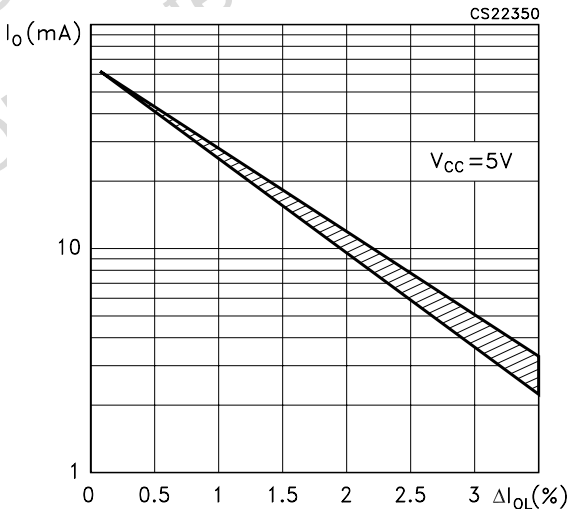

Obsolete Product(s) - Obsolete Product(s)

Figure 17. Blue powerLED application circuit

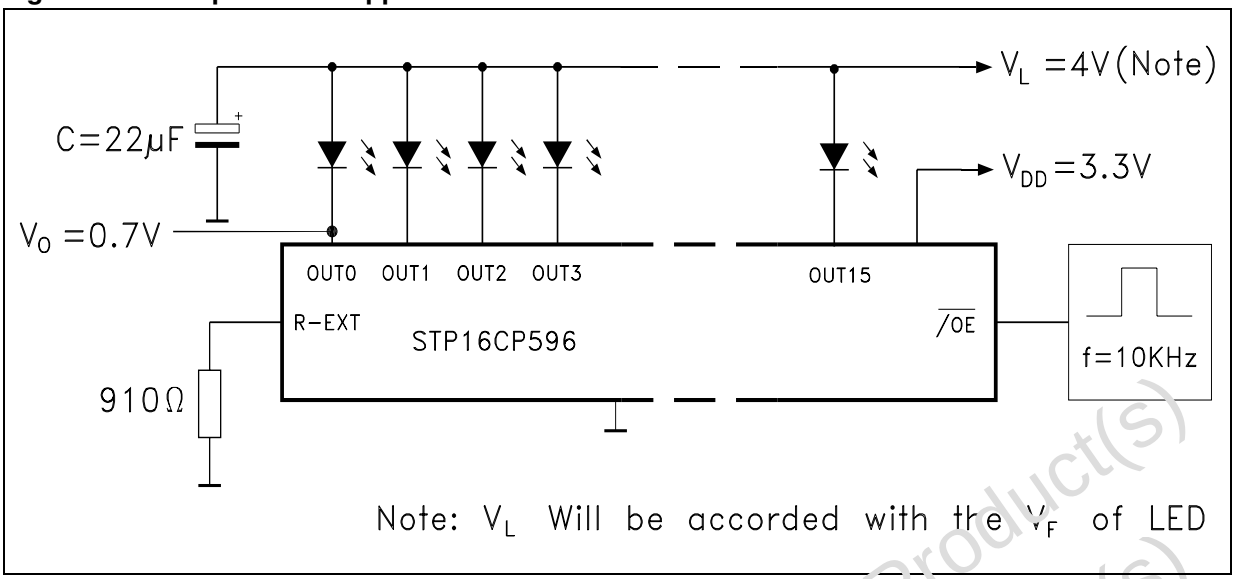

Obsolete Product(s) - Obsolete Product(s)
Obsolete Product(s) - Obsolete Product(s)

9 Package mechanical data

In order to meet environmental requirements, ST offers these devices in ECOPACK® packages. These packages have a Lead-free second level interconnect. The category of second Level Interconnect is marked on the package and on the inner box label, in compliance with JEDEC Standard JESD97. The maximum ratings related to soldering conditions are also marked on the inner box label. ECOPACK is an ST trademark. ECOPACK specifications are available at: www.st.com.

Obsolete Product(s) - Obsolete Product(s)
Obsolete Product(s) - Obsolete Product(s)

Table 9. Plastic DIP-24 (0.25) Mechanical data

Ref	mm			inch		
	Min	Typ	Max	Min	Typ	Max
A			4.32			0.170
A1	0.38			0.015		
A2		3.3			0.130	
B	0.41	0.46	0.51	0.016	0.018	0.020
B1	1.40	1.52	1.65	0.055	0.060	0.065
c	0.20	0.25	0.30	0.008	0.010	0.012
D	31.62	31.75	31.88	1.245	1.250	1.255
E	7.62		8.26	0.300		0.325
E1	6.35	6.60	6.86	0.250	0.260	0.270
e		2.54			0.100	
E1		7.62			0.300	
L	3.18		3.43	0.125		0.135
M	0°		15°	0°		15°

Figure 18. Plastic DIP-24 (0.25) Package dimensions

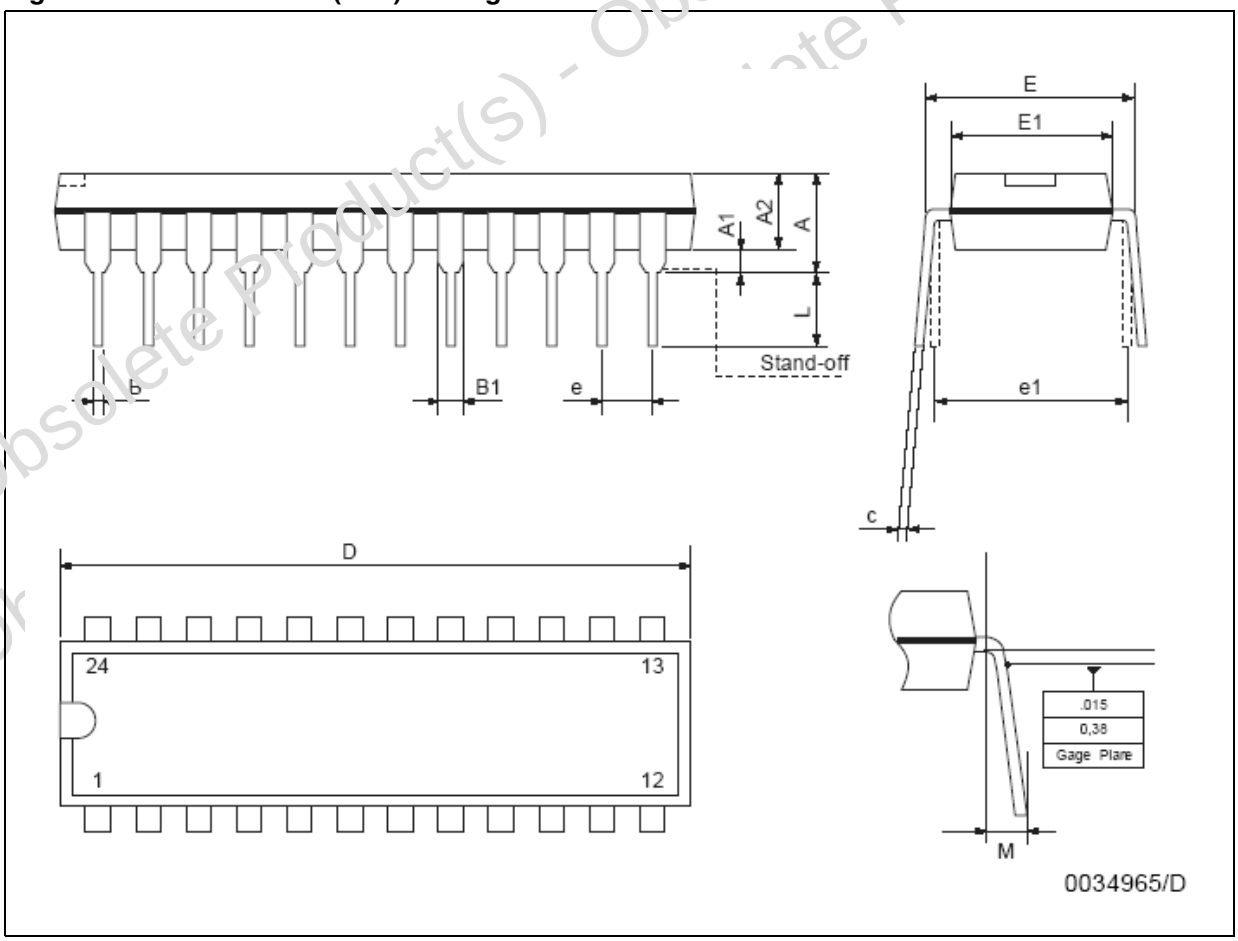

Obsolete Product(s) - Obsolete Product(s)

Table 10. TSSOP24 Mechanical data

Ref	mm			inch		
	Min	Typ	Max	Min	Typ	Max
A			1.1			0.043
A1	0.05		0.15	0.002		0.006
A2		0.9			0.035	
b	0.19		0.30	0.0075		0.0118
c	0.09		0.20	0.0035		0.0079
D	7.7		7.9	0.303		0.311
E	4.3		4.5	0.169		0.177
e		0.65 BSC			0.0256 BSC	
H	6.25		6.5	0.246		0.256
K	0°		8°	0°		8°
L	0.50		0.70	0.020		0.028

Figure 19. TSSOP24 Package dimensions

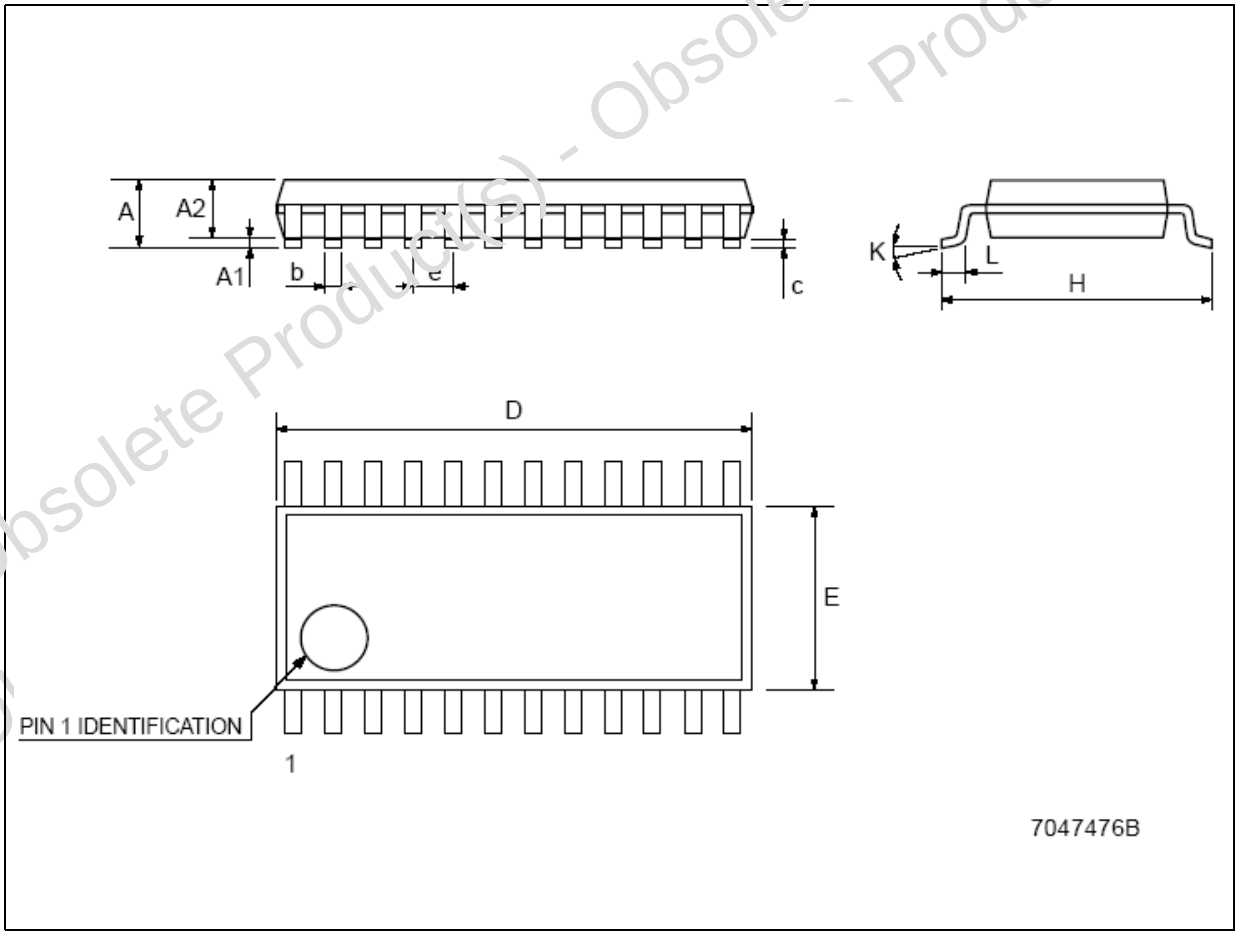

Obsolete Product(s) - Obsolete Product(s)

Table 11. Tape & Reel TSSOP24

Ref	mm			inch		
	Min	Typ	Max	Min	Typ	Max
A			330			12.992
C	12.8		13.2	0.504		0.519
D	20.2			0.795		
N	60			2.362		
T			22.4			0.882
Ao	6.8		7	0.268		0.276
Bo	8.2		8.4	0.323		0.331
Ko	1.7		1.9	0.067		0.075
Po	3.9		4.1	0.153		0.161
P	11.9		12.1	0.468		0.476

Figure 20. Reel dimensions

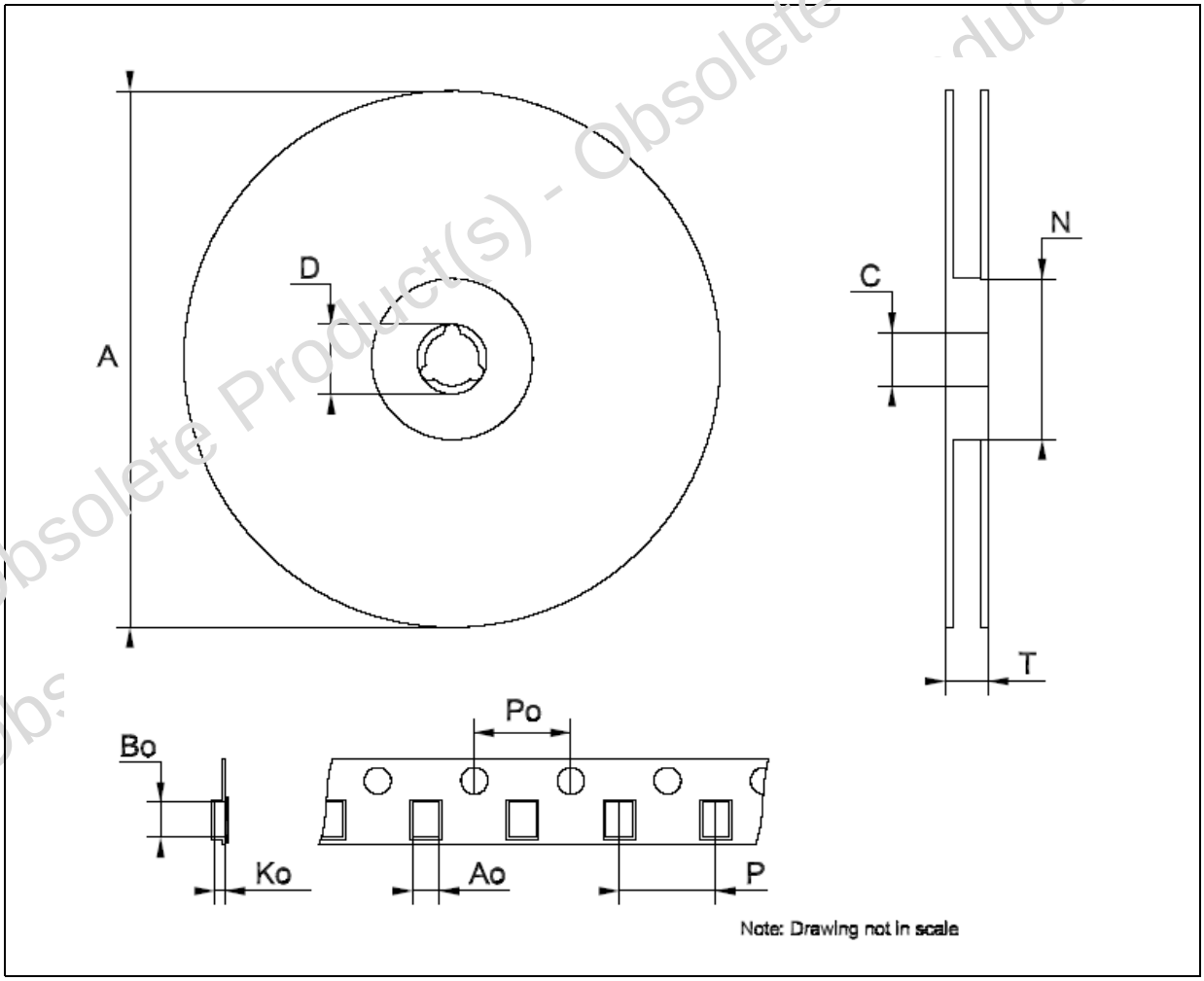

Obsolete Product(s) - Obsolete Product(s)

Table 12. SO-24 Mechanical data

Ref	mm			inch		
	Min	Typ	Max	Min	Typ	Max
A			2.65			0.104
a1	0.1		0.2	0.004		0.008
a2			2.45			0.096
b	0.35		0.49	0.014		0.019
b1	0.23		0.32	0.009		0.012
C		0.5			0.020	
c1	45°(typ.)					
D	15.20		15.60	0.598		0.614
E	10.00		10.65	0.393		0.419
e		1.27			0.050	
e3		13.97			0.550	
F	7.40		7.60	0.291		0.300
L	0.50		1.27	0.020		0.050
S	°(max.) 8					

Figure 21. SO-24 Package dimensions

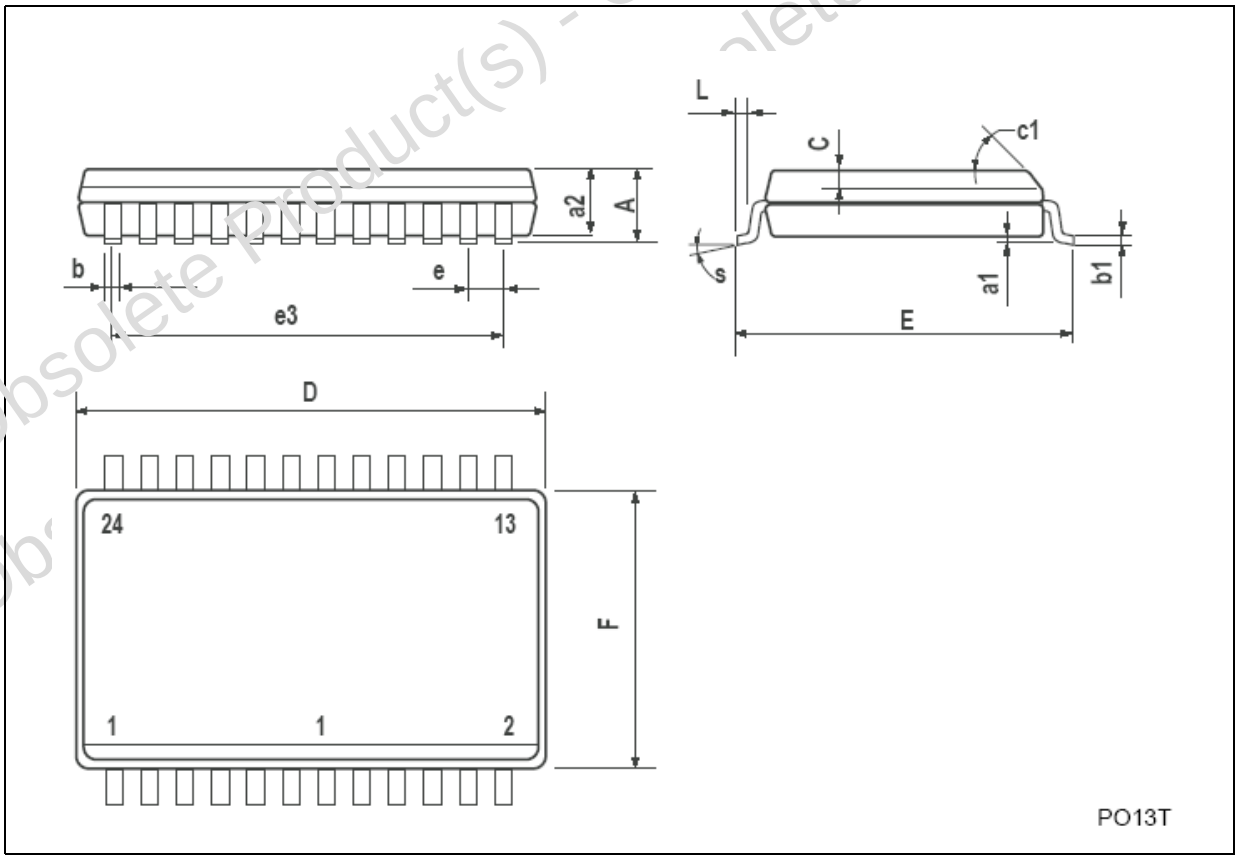

Obsolete Product(s) - Obsolete Product(s)

Table 13. Tape & Reel SO-24

Ref	mm			inch		
	Min	Typ	Max	Min	Typ	Max
A			330			12.992
C	12.8		13.2	0.504		0.519
D	20.2			0.795		
N	60			2.362		
T			30.4			1.197
Ao	10.8		11.0	0.425		0.433
Bo	15.7		15.9	0.618		0.626
Ko	2.9		3.1	0.114		0.122
Po	3.9		4.1	0.153		0.161
P	11.9		12.1	0.468		0.476

Figure 22. Reel dimensions

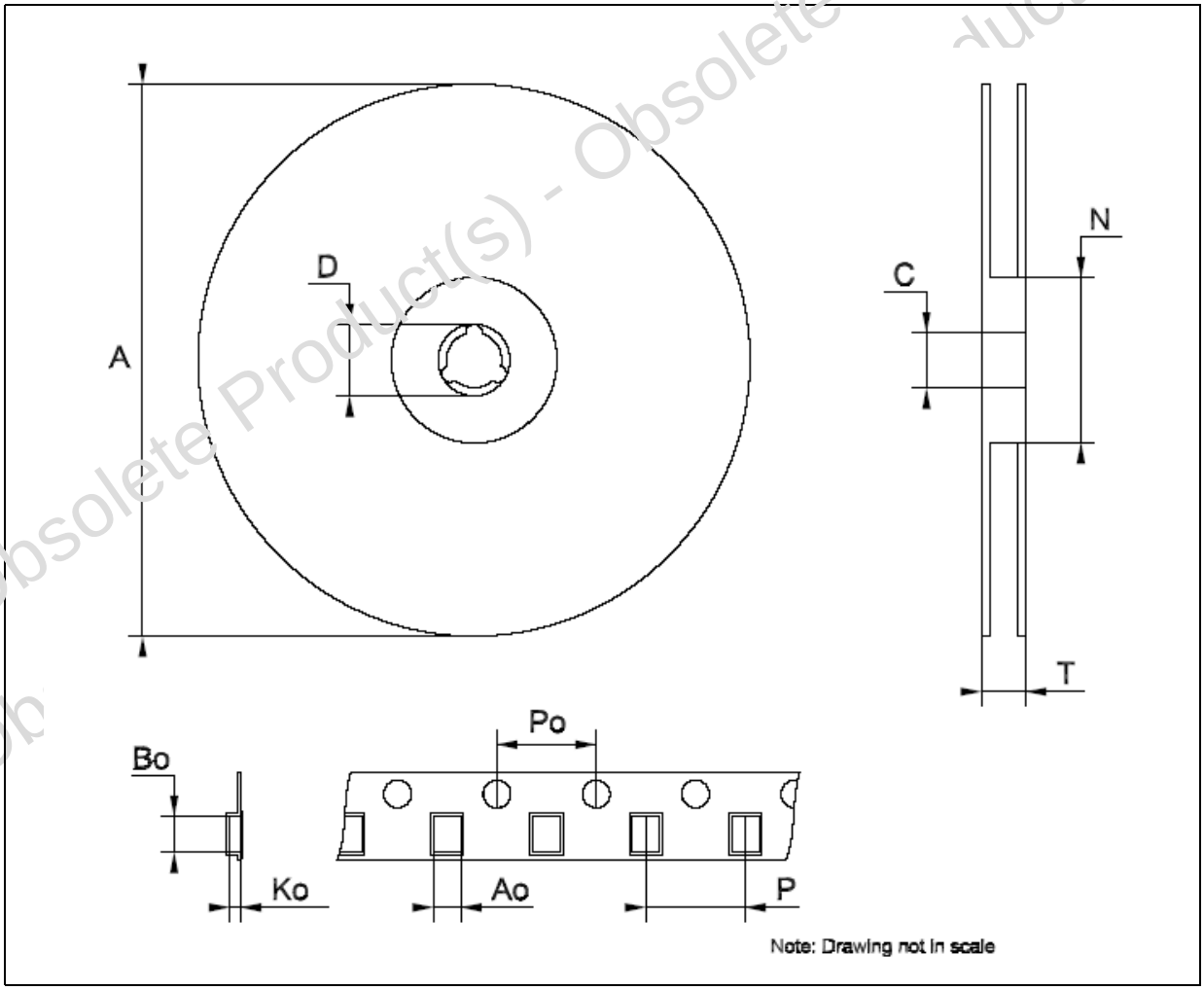

Obsolete Product(s) - Obsolete Product(s)

Table 14. TSSOP24 Exposed-pad

Ref	mm			inch		
	Min	Typ	Max	Min	Typ	Max
A			1.2			0.047
A1			0.15		0.004	0.006
A2	0.8	1	1.05	0.031	0.039	0.041
b	0.19		0.30	0.007		0.012
c	0.09		0.20	0.004		0.0089
D	7.7	7.8	7.9	0.303	0.307	0.311
D1		2.7		0.106		
E	6.2	6.4	6.6	0.244	0.252	0.260
E1	4.3	4.4	4.5	0.169	0.173	0.177
E2		1.5		0.059		
e		0.65			0.0256	
K	0°		8°	0°		8°
L	0.45	0.60	0.75	0.018	0.024	0.030

Figure 23. TSSOP24 dimensions

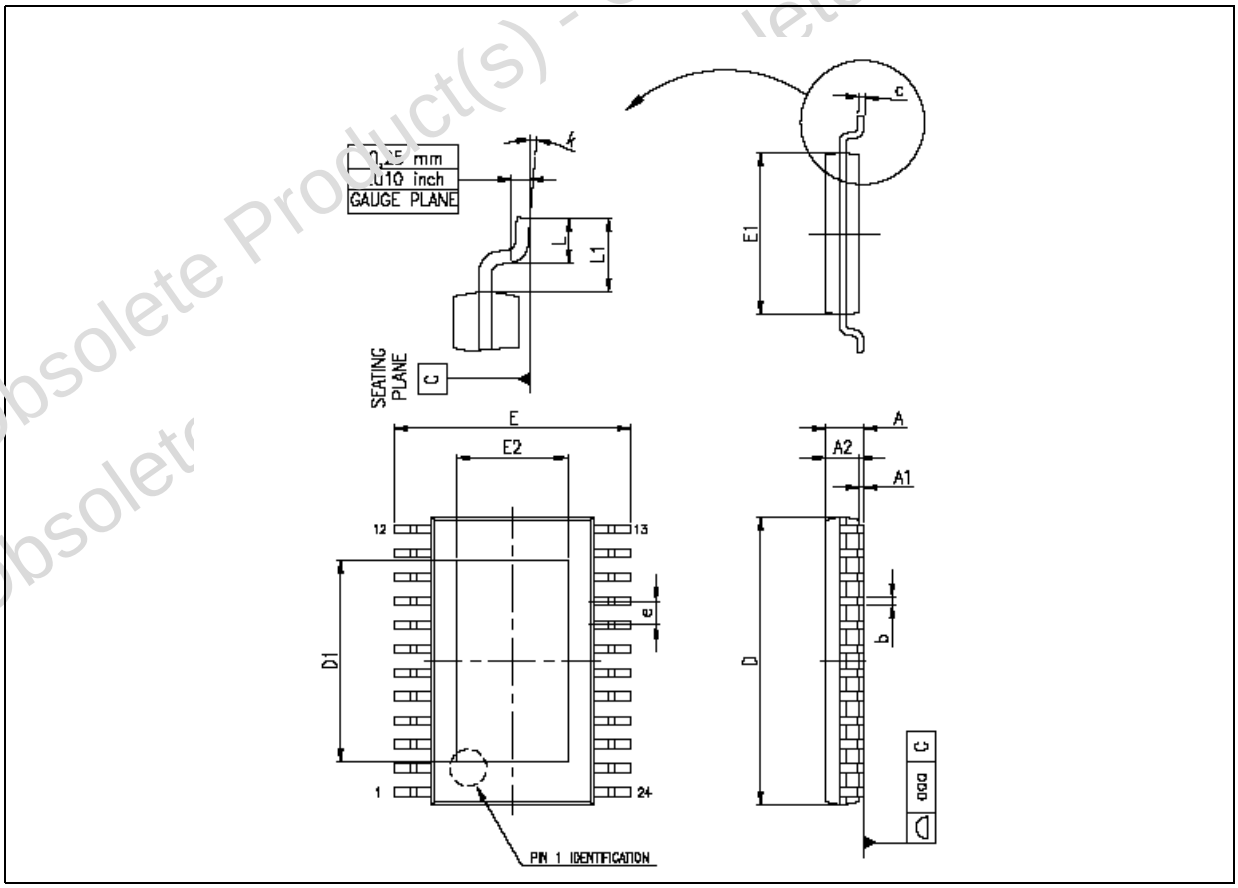

Obsolete Product(s) - Obsolete Product(s)

10 Revision history

Table 15. Revision history

Date	Revision	Change
08-Apr-2005	1	First Release.
02-May-2005	2	Typing Error on the description features.
25-Jul-2005	3	Add note on Fig. 1 and Table 5.
16-May-2006	4	New template, few updates

Obsolete Product(s) - Obsolete Product(s)
Obsolete Product(s) - Obsolete Product(s)

Please Read Carefully:

Information in this document is provided solely in connection with ST products. STMicroelectronics NV and its subsidiaries (“ST”) reserve the right to make changes, corrections, modifications or improvements, to this document, and the products and services described herein at any time, without notice.

All ST products are sold pursuant to ST’s terms and conditions of sale.

Purchasers are solely responsible for the choice, selection and use of the ST products and services described herein, and ST assumes no liability whatsoever relating to the choice, selection or use of the ST products and services described herein.

No license, express or implied, by estoppel or otherwise, to any intellectual property rights is granted under this document. If any part of this document refers to any third party products or services it shall not be deemed a license grant by ST for the use of such third party products or services, or any intellectual property contained therein or considered as a warranty covering the use in any manner whatsoever of such third party products or services or any intellectual property contained therein.

UNLESS OTHERWISE SET FORTH IN ST’S TERMS AND CONDITIONS OF SALE ST DISCLAIMS ANY EXPRESS OR IMPLIED WARRANTY WITH RESPECT TO THE USE AND/OR SALE OF ST PRODUCTS INCLUDING WITHOUT LIMITATION IMPLIED WARRANTIES OF MERCHANTABILITY, FITNESS FOR A PARTICULAR PURPOSE (AND THEIR EQUIVALENTS UNDER THE LAWS OF ANY JURISDICTION), OR INFRINGEMENT OF ANY PATENT, COPYRIGHT OR OTHER INTELLECTUAL PROPERTY RIGHT.

UNLESS EXPRESSLY APPROVED IN WRITING BY AN AUTHORIZE REPRESENTATIVE OF ST, ST PRODUCTS ARE NOT DESIGNED, AUTHORIZED OR WARRANTED FOR USE IN MILITARY, AIR CRAFT, SPACE, LIFE SAVING, OR LIFE SUSTAINING APPLICATIONS, NOR IN PRODUCTS OR SYSTEMS, WHERE FAILURE OR MALFUNCTION MAY RESULT IN PERSONAL INJURY, DEATH, OR SEVERE PROPERTY OR ENVIRONMENTAL DAMAGE.

Resale of ST products with provisions different from the statements and/or technical features set forth in this document shall immediately void any warranty granted by ST for the ST product or service described herein and shall not create or extend in any manner whatsoever, any liability of ST.

ST and the ST logo are trademarks or registered trademarks of ST in various countries.

Information in this document supersedes and replaces all information previously supplied.

The ST logo is a registered trademark of STMicroelectronics. All other names are the property of their respective owners.

© 2006 STMicroelectronics - All rights reserved

STMicroelectronics group of companies

Australia - Belgium - Brazil - Canada - China - Czech Republic - Finland - France - Germany - Hong Kong - India - Israel - Italy - Japan - Malaysia - Malta - Morocco - Singapore - Spain - Sweden - Switzerland - United Kingdom - United States of America

www.st.com

Obsolete Product(s) - Obsolete Product(s)