STOD2540

PMOLED display power supply

Feature summary

- Inductor switcher boost controller.
- PFM mode control.
- High efficiency over wide range of load (1mA to 40mA).
- Integrated Load disconnect switch.
- Over voltage protection with automatic restart
- Soft start with adjustable peak current limit
- Enable pin
- Low shutdown current.
- Small external inductor.
- Supply voltage from 3.0V to 5.5V

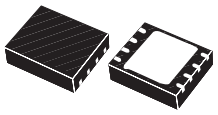

QFN8 (3mm x 3mm)

Application

- PMOLED display driver

Description

STOD2540 is dedicated to Passive Matrix OLED (PMOLED) displays for portable handsets and provides the pre-charge and biasing voltage of the column matrix driver as shown in Figure 3.

The current capability of STOD2540 allows feeding a 1", 1.3" or 1.5" color PMOLED.

STOD2540 is a boost converter that operates from 3.0V to 5.5V and can provide an output voltage as high as 25V. The output current capability is maximum 40mA up to 25V output voltage. The regulation is performed by a resistor divider network (*Figure 3.*) that detects the output voltage.

In this state-of-the-art boost converter, a DC current path exists between the battery source and the load. In order to reduce the consumption in Shutdown mode, a high-side load isolation switch is necessary to cut this DC current path in Standby mode. The Load Disconnect Switch (LDS) actsas an isolation switch in Shutdown mode.

Order codes

Part number	Package	Packaging
STOD2540PMR	QFN8 (3mm x 3mm)	4500 parts per reel

Contents

1 **Schematic diagram** 3

2 **Pin configuration** 4

3 **Maximum ratings** 5

4 **Electrical characteristics** 6

5 **Functional description** 8

5.1 Boost controller 8

5.2 Adjustable peak inductor current limit 8

5.3 Enable 8

5.4 OVP 8

5.5 Load isolation switch 9

5.6 Efficiency 9

5.7 Under voltage lockout (UVLO) 9

6 **Typical application** 10

6.1 Demoboard 11

7 **Typical performance characteristics** 12

8 **Package mechanical data** 15

9 **Revision history** 18

1 Schematic diagram

Figure 1. Block diagram

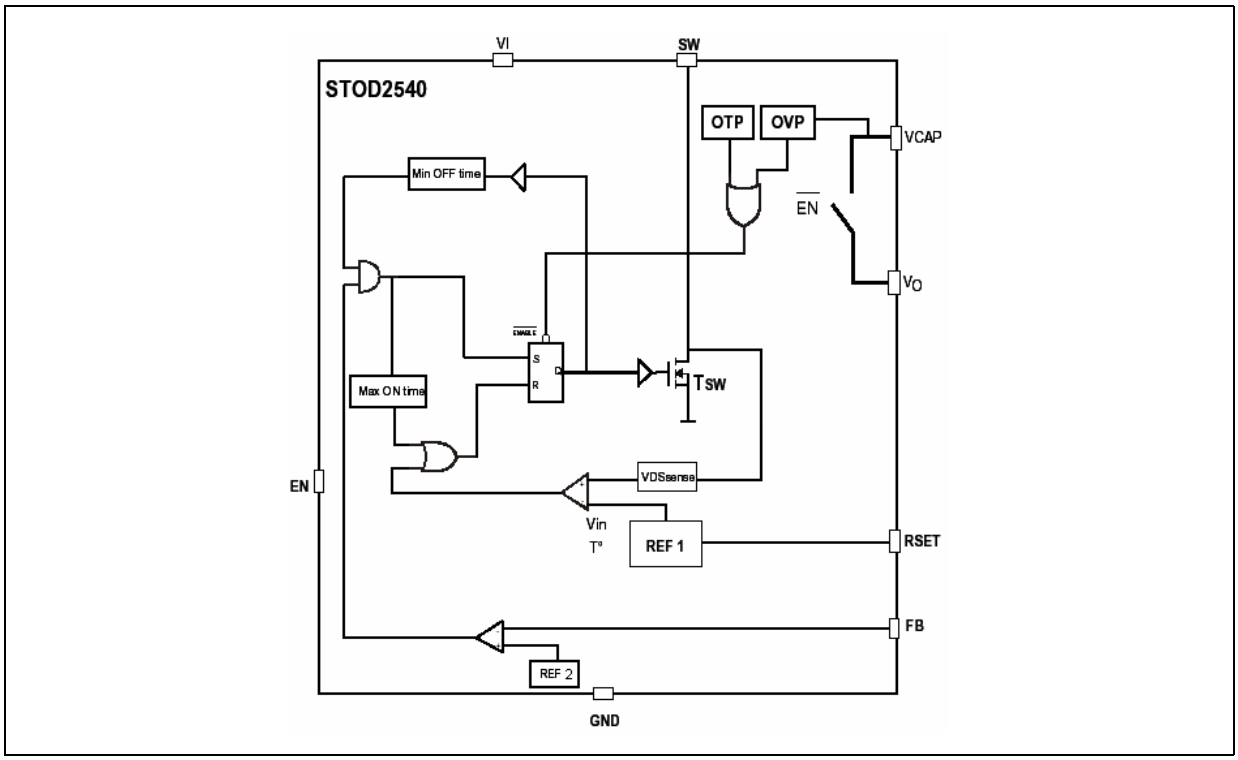

2 Pin configuration

Figure 2. Pin connections (top view)

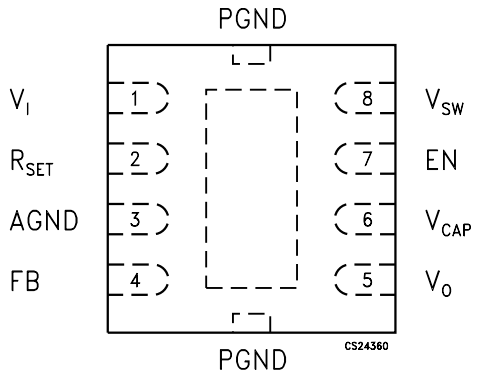

Table 1. Pin description

PIN N°	SYMBOL	NOTE
1	V_I	Supply voltage
2	RSET	Peak inductor current adjust
3	AGND	Analog Ground
4	FB	Feedback for the LED current regulation
5	V_O	Output voltage for LED supply
6	VCAP	Load Disconnect Switch input
7	ENABLE	IC enable signal
8	VSW	Boost switch drain
9	PGND	Power Ground

3 Maximum ratings

Table 2. Absolute maximum ratings

Symbol	Parameter	Value	Unit
VB_{SW}, VB_O	Breakdown voltage at OUT and SW pin	40	V
V_I	Supply voltage range	6	V
R_{SET}	R_{SET} pin	V_I + 0.3	V
EN	Enable pin	V_I + 0.3	V
V_{ESD}	ESD ratings, HBM MIL STD 883C	2	kV
T_{STG}	Storage Temperature Range	-65 to 150	°C
T_{OP}	Operating Junction Temperature Range	-40 to 85	°C

Table 3. Thermal Data

Symbol	Parameter	Value	Unit
R_{thJA}	Thermal Resistance Junction-Ambient	52	°C/W

4 Electrical characteristics

Table 4. Electrical characteristics
(T_J = 40°C to 85°C, V_I = 3.6V, V_{EN} = 3V, C_I = C_O = 4.7µF, L = 4.7µH, R_1 = 180kΩ, R_2 = 10kΩ, V_O = 24V, Typ. values @ 25°C, unless otherwise specified).

Symbol	Parameter	Test	Min.	Typ.	Max.	Unit
V_I	Input voltage range		3.0		5.5	V
V_O	Regulated output voltage	V_I = 3V to 5.5V	V_I + 0.5	25	35	V
V_{OVP}	Over voltage protection on output		35			V
I_O	Continuous output current	V_O = 25V	1		40	mA
I_{SD}	Stand-by current	V_{EN} = Low, V_I = 3.6V			3	µA
		V_{EN} = Low, V_I = 3V to 4.2V			10	
I_Q	Quiescent current consumption	V_I = 3V to 4.2V @ 25°C		0.4	0.8	mA
		V_I = 5.5V @ 25°C		0.8	1.2	
$R_{DSON-SW}$	Boost switch R_{DSON} *Note: 1*	V_I = 4.2V, I_{SW} = 100mA		0.4		Ω
	BVDS Breakdown voltage		40			V
R_{DSON}-LDS	R_{DSON} *Note: 1*	V_O = 25V, I_O = 30mA		2		Ω
	BVDS Breakdown voltage		40			V
$I_{LIM-ADJ}$	Peak inductor limit range *Note: 1*	R_{SET} = 10kΩ to 100kΩ	0.2		1.1	A
$I_{LIM-MAX}$	Maximum peak inductor current *Note: 1*	V_I = 3V to 5.5V, R_{SET} = V_I	0.75		1.2	A
FB	Feedback voltage	5% @ 25°C	1.18	1.24	1.30	V
T_{ON_MAX}	Maximum ON Time	V_I = 4.2V		5.5		µs
T_{OFF_MIN}	Minimum OFF Time	V_I = 4.2V		300		ns
Eff	Efficiency, V_I = 3.6V *Note: 1*	I_O = 1 mA to 5mA	65			%
		I_O = 5 mA to 40mA	70			
	Efficiency, V_I =4.2V *Note: 1*	I_O = 1 mA to 5mA	65			
		I_O = 5 mA to 40mA	70			
Ripple	Output ripple and noise	V_I = 3.6V, I_O = 5 mA, V_O = 24V		1.3		%
		V_I = 3.6V, I_O = 30 mA, V_O = 24V		1.3		
		V_I = 4.2V, I_O = 5 mA, V_O = 24V		1.3		
		V_I = 4.2V, I_O = 30 mA, V_O = 24V		1.3		
OV_{HYST}	Overvoltage hysteresis			2		V

Table 4. Electrical characteristics
(T_J = 40°C to 85°C, V_I = 3.6V, V_{EN} = 3V, C_I = C_O = 4.7µF, L = 4.7µH, R_1 = 180kΩ, R_2 = 10kΩ, V_O = 24V, Typ. values @ 25°C, unless otherwise specified).

Symbol	Parameter	Test	Min.	Typ.	Max.	Unit
V_{EN}	Enable input logic low	Disable Low V_{IL}			0.3	V
	Enable input logic high	Enable High V_{IH}	1.2			
Line_V_{FB}	Line regulation V_{FB}	V_I = 3V to 5.5V, I_O = 5 mA		5	35	mV
Load_V_{FB}	Line regulation V_{FB}	V_I = 3V to 5.5V, I_O = 5 mA		5	35	mV

Note: 1 Guaranteed by design.

5 Functional description

5.1 Boost controller

STOD2540 is a boost converter operating in PFM (pulsed frequency modulation) mode. The converter monitors the output voltage through the bridge resistor divider R_1 and R_2 and when the feedback voltage falls below the reference voltage, REF2, the boost switch t_{SW} turns ON and the current ramps up. The inductor current is measured by detect the temperature compensated drain voltage of the boost MOSFET. The boost turns off when its drain voltage reaches the reference REF1, the main switch remains off until the minimum off time (300ns typical) has passed and the feedback voltage is below the reference again. A maximum ON time of 4µs prevent the switch t_{SW} to stay ON during a too long period of time.

In order to well calculate the bridge resistors values with a fixed V_O, the following formula can be used:

$$\frac{Vout}{1,24} - 1 = \frac{R_1}{R_2}$$

5.2 Adjustable peak inductor current limit

The peak inductor current is monitored by sensing the drain voltage of the switch t_{SW}.

Since it exceeds the temperature compensated and supply voltage compensated reference REF1, the RS Flip flop is reset and t_{SW} is turned OFF.

By connecting a resistance between the pin RSET and GND, the peak current limit can be adjusted from 200mA to 1.1A (R_{SET} from 10kΩ to 100kΩ). When the pin R_{SET} is directly connected to V_I, the default value is 1A.

5.3 Enable

The ENABLE pin is a high logic input signal and allows turning on/off the controller without cutting the input voltage from the boost regulator circuit. With a high input voltage (1.2V $<V_{EN}<$ V_I+0.3V) on this pin, the device is allowed to work normally. No pull-up or pull down is present on this pin.

5.4 OVP

If the regulation loop is cut, there is no signal at the feedback pin, the PFM controller will then continue to switch without control and generate an output voltage at the SW, V_{CAP} and V_O pin exceeding the breakdown value V_{BSW}, V_{BCAP} and V_{BO}.

The Over Voltage Protection (OVP) senses the voltage at the V_{CAP} pin.When the voltage exceed the breakdown voltage of the device the controller is automatically turned Off.

A hysteresis control enables the device to automatically restart when the output voltage drops below a 2V typical value.

5.5 Load isolation switch

When the device is in Shutdown mode, a DC current path always exists between the power source and the load; increasing the standby consumption. A high side switch LDS isolates the load from the source when the STOD2540 is disabled.

5.6 Efficiency

The total consumption of some PMOLED display, can be as low as 1mA. In order to increase the battery run time of the device, STOD2540 offers a high efficiency over a wide range of load and input voltage range.

5.7 Under voltage lockout (UVLO)

The minimum supply voltage is 3.0 V, under this value the undervoltage lockout circuit operates with typical threshold 2.8V.
When supply voltage is below 3.0V, possible noise in the supply line could disturb the UVLO circuit causing loss of output regulation. This behavior is eliminated choosing C_I = 10µF or higher.

6 Typical application

Figure 3. Basic Connection

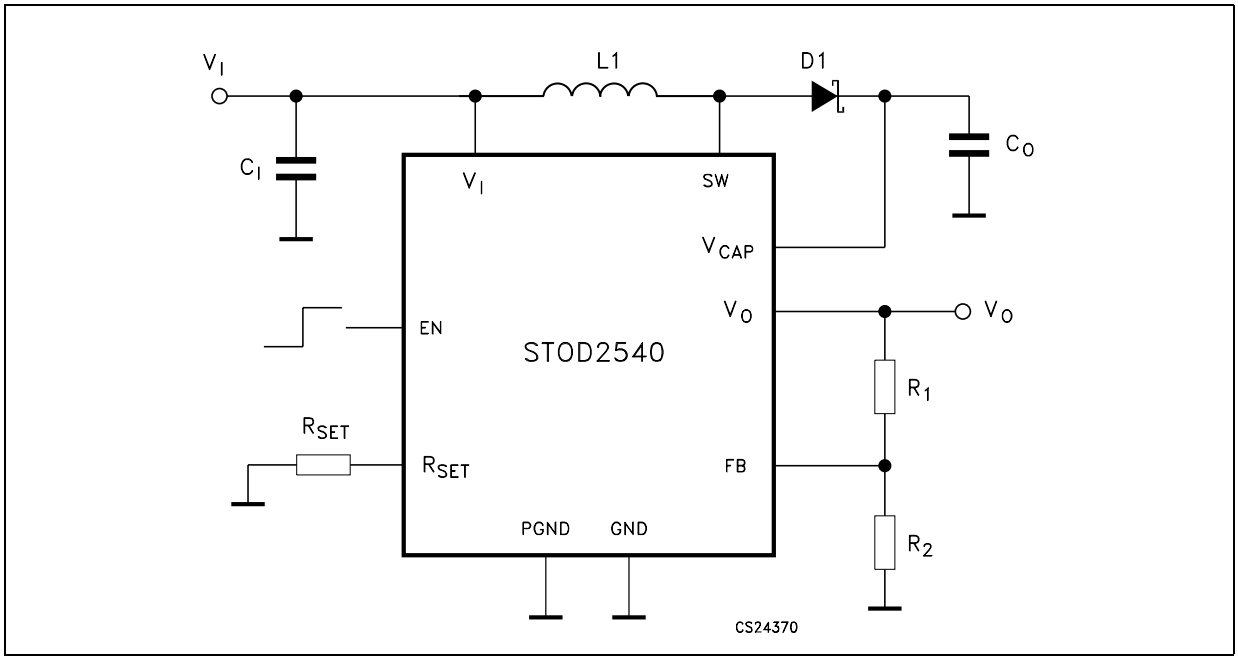

Table 5. External components (see fig. 3 and note)

Symbol	Parameter	Test	Min.	Typ.	Max.	Unit
D	Boost schottky diode	VRRM	30			V
		V_F at I_F = 300mA, T_J = 25°C			0.5	V
		I_R at V_R = 10V, T_J = 25°C			30	µA
R_1	Feedback resistor			180		kΩ
R_2	Feedback resistor			10		
R_{SET}	Peak current limit adjust	I_{PK} = 200mA to 1.1A	10		100	
C_I	Input ceramic type low ESR	Ceramic Type		4.7		µF
C_O	Output capacitance: ceramic low ESR	Capacitance	4.7			µF
		Voltage	42			V
		ESR			1.6	Ω
L	Boost inductor (height < 2mm)	Inductance			4.7	µH
		I_{SAT}, R_{SET} pin to V_I			1	A

Note: The external components suggested in this document should be considered as a design reference guide. The performances mentioned in the electrical characteristics table are not guaranteed for all the possible electrical parameters of the components included in this list. On other hand, the operation of STOD2540 is not limited to the use of components included in this list.

6.1 Demoboard

Figure 4. Suggested demoboard schematic (Top layer view)

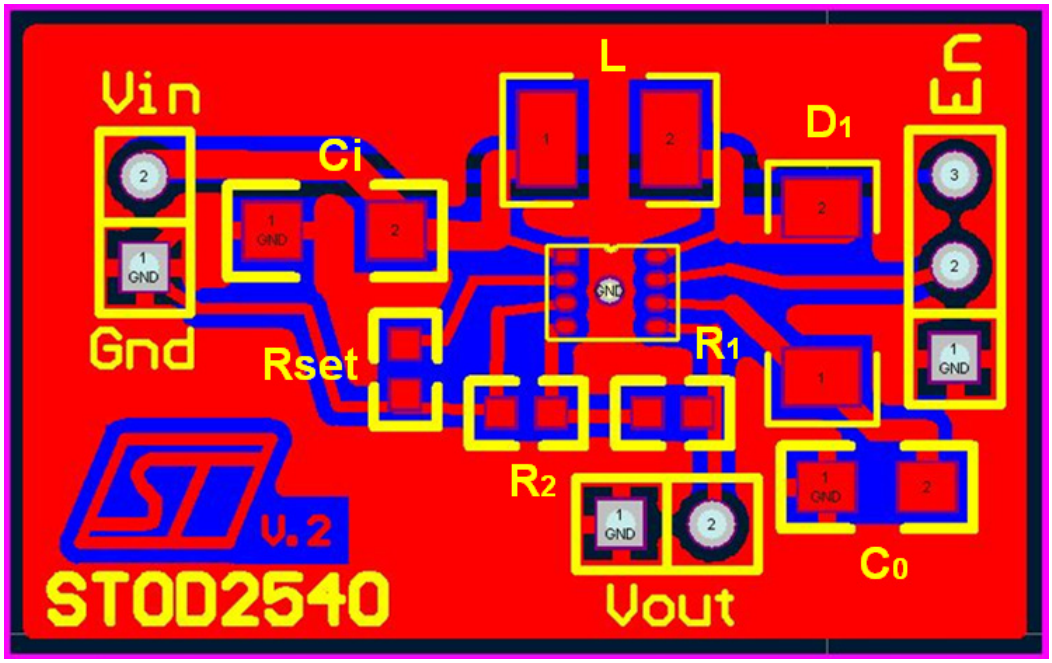

7 Typical performance characteristics

(T_J = 40°C to 85°C, V_I = 3.6V, V_{EN} = 3V, C_I = C_O = 4.7µF, L = 4.7µH, R_1 = 180kΩ, R_2 = 10kΩ, V_O = 24V, Typ. values @ 25°C, unless otherwise specified)

Figure 5. Efficiency vs output current

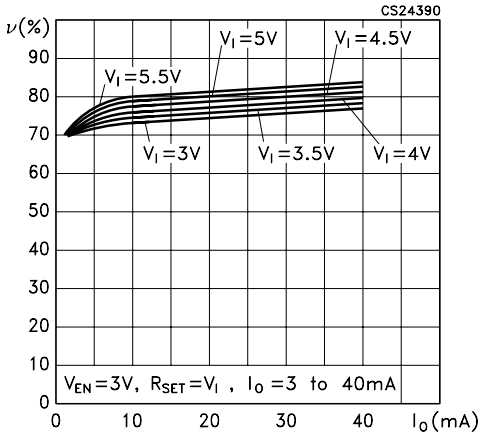

Figure 6. Efficiency vs input voltage

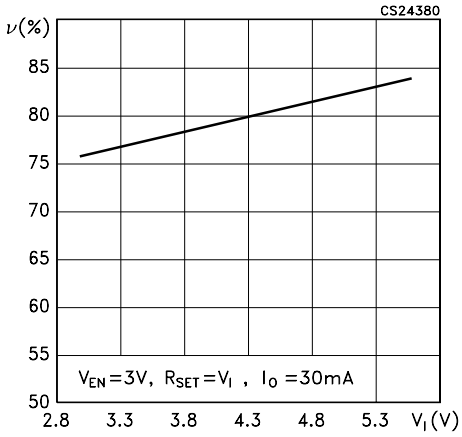

Figure 7. V_{EN} vs temperature

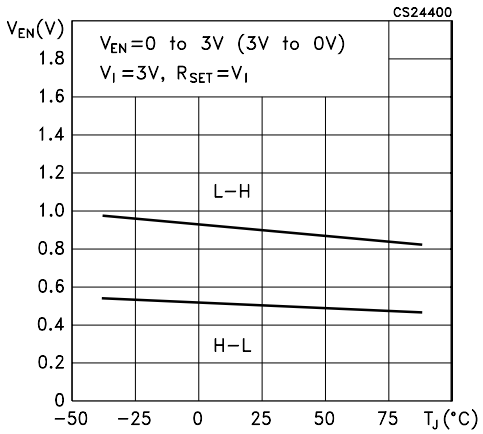

Figure 8. V_{FB} vs input voltage

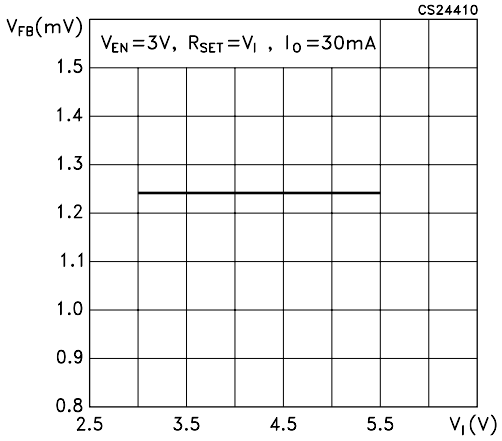

Figure 9. V_{FB} vs output current

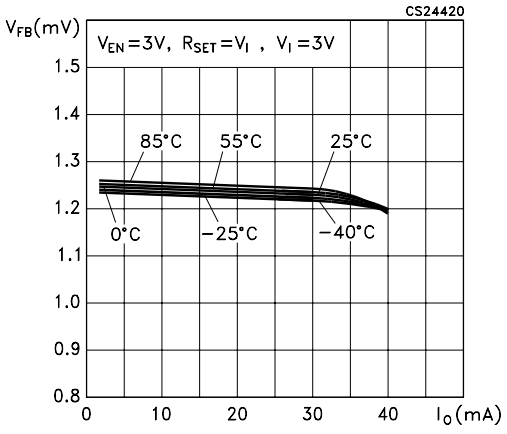

Figure 10. V_{FB} vs output current

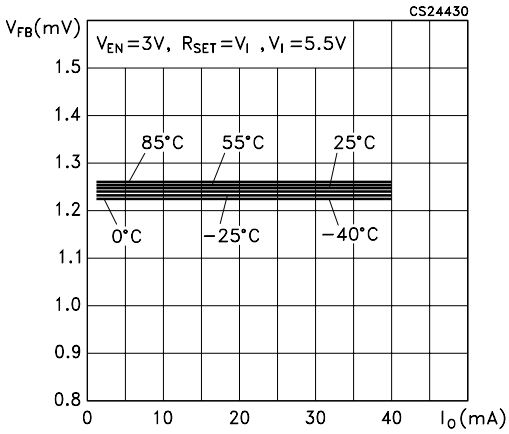

Figure 11. V_{OVP} vs temperature

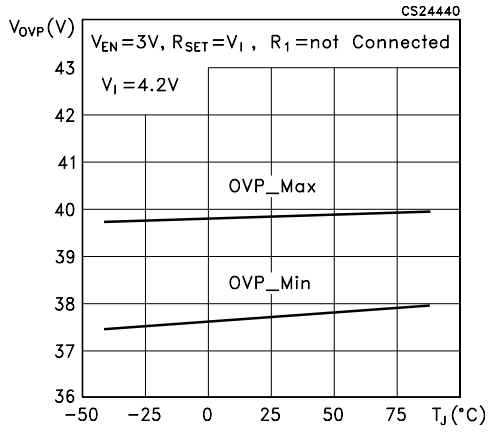

Figure 12. V_{RIPPLE} vs input voltage

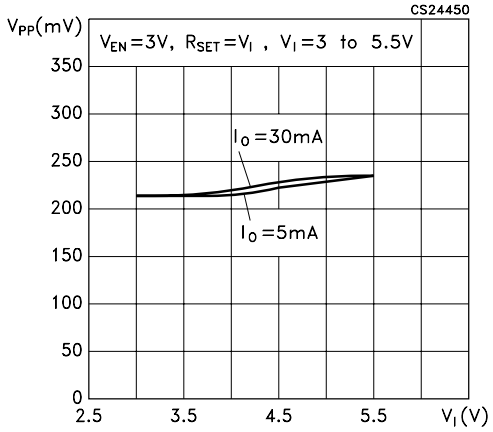

Figure 13. I_{LIM_MAX} vs input voltage

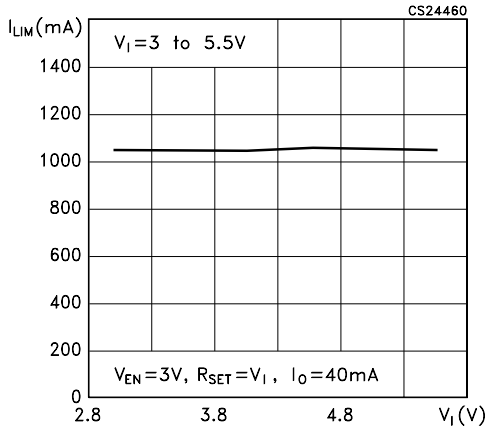

Figure 14. I_{LIM_MAX} vs temperature

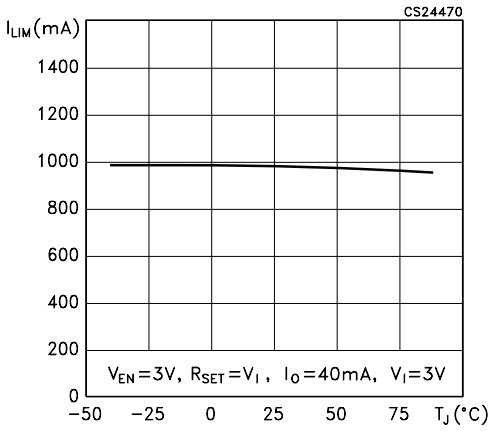

Figure 15. I_{LIM_MAX} vs R_{SET}

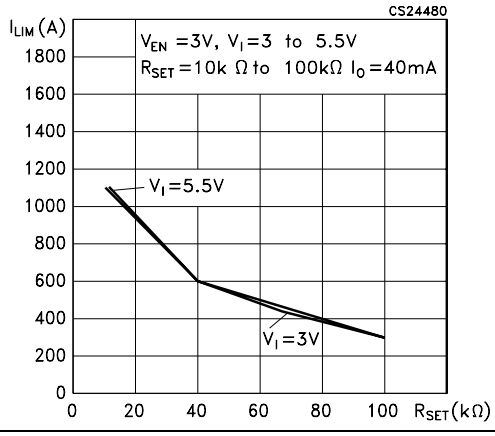

Figure 16. I_Q vs temperature

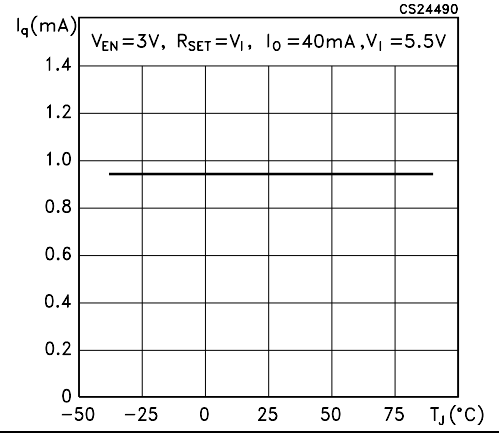

Figure 17. t_{ON_MAX} vs temperature

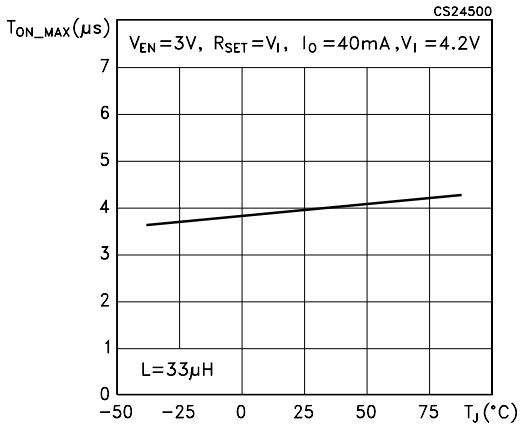

Figure 18. t_{OFF_MIN} vs temperature

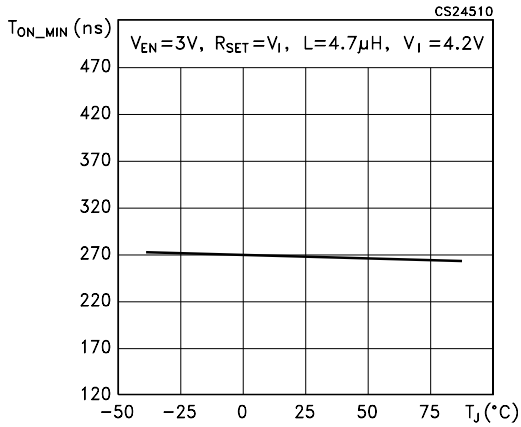

Figure 19. Line V_{FB} vs temperature

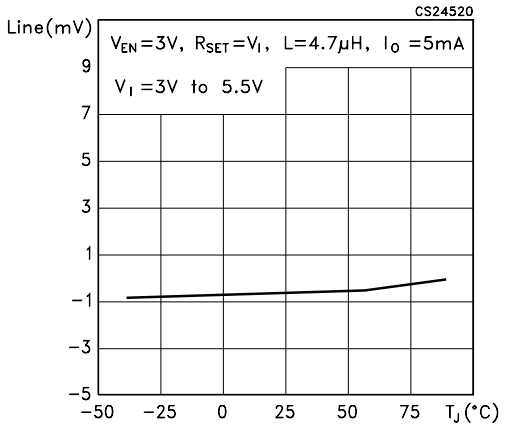

Figure 20. Load V_{FB} vs temperature

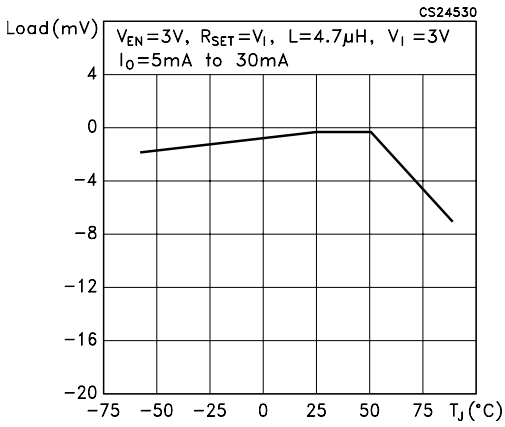

8 Package mechanical data

In order to meet environmental requirements, ST offers these devices in ECOPACK® packages. These packages have a Lead-free second level interconnect. The category of second Level Interconnect is marked on the package and on the inner box label, in compliance with JEDEC Standard JESD97. The maximum ratings related to soldering conditions are also marked on the inner box label. ECOPACK is an ST trademark. ECOPACK specifications are available at: www.st.com.

QFN8 (3x3) MECHANICAL DATA

DIM.	mm.			inch		
	MIN.	TYP	MAX.	MIN.	TYP.	MAX.
A	0.80	0.90	1.00	0.032	0.035	0.039
A1		0.03	0.05		0.001	0.002
A2	0.65	0.70	0.75	0.026	0.028	0.030
A3	0.15	0.20	0.25	0.006	0.008	0.010
b	0.29	0.31	0.39	0.011	0.012	0.015
b1	0.17		0.30	0.007		0.012
D		3.00			0.118	
D2	1.92	2.02	2.12	0.076	0.080	0.084
E		3.00			0.118	
E2	1.11	1.21	1.31	0.044	0.048	0.052
e		0.65			0.026	
K	0.20			0.008		
L	0.20	0.29	0.45	0.008	0.011	0.018
L1	0.16	0.24	0.40	0.006	0.009	0.016
L2			0.13			0.005
r		0.15			0.006	
r1		0.15			0.006	

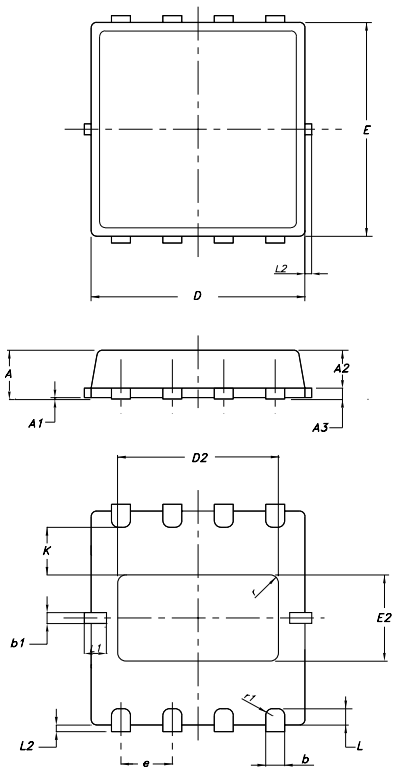

7517789

Tape & Reel QFNxx/DFNxx (3x3) MECHANICAL DATA

DIM.	mm.			inch		
	MIN.	TYP	MAX.	MIN.	TYP.	MAX.
A			330			12.992
C	12.8		13.2	0.504		0.519
D	20.2			0.795		
N	60			2.362		
T			18.4			0.724
Ao		3.3			0.130	
Bo		3.3			0.130	
Ko		1.1			0.043	
Po		4			0.157	
P		8			0.315	

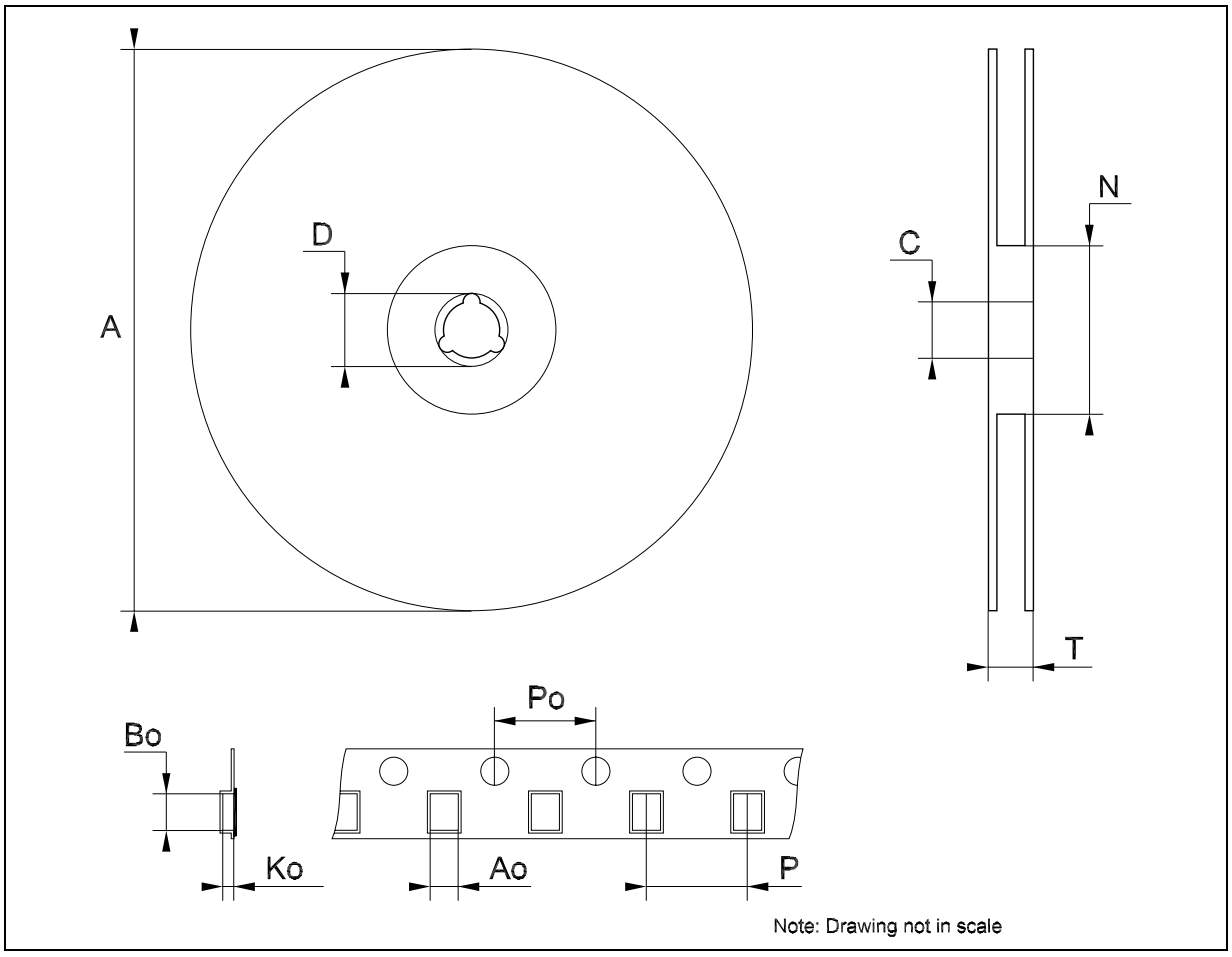

Note: Drawing not in scale

9 Revision history

Table 6. Revision history

Date	Revision	Changes
22-Mar-2006	1	Initial release.
03-Apr-2006	2	Add fig. 2 demoboard on page 3.
08-Jun-2006	3	Description in cover page updated.
23-Jun-2006	4	Change range of R_{SET} value and add description paragraph 5.7.
11-Sep-2006	5	Mistake on table 4 Ripple test value 3.6V ==> 4.2V.

Please Read Carefully:

Information in this document is provided solely in connection with ST products. STMicroelectronics NV and its subsidiaries (“ST”) reserve the right to make changes, corrections, modifications or improvements, to this document, and the products and services described herein at any time, without notice.

All ST products are sold pursuant to ST’s terms and conditions of sale.

Purchasers are solely responsible for the choice, selection and use of the ST products and services described herein, and ST assumes no liability whatsoever relating to the choice, selection or use of the ST products and services described herein.

No license, express or implied, by estoppel or otherwise, to any intellectual property rights is granted under this document. If any part of this document refers to any third party products or services it shall not be deemed a license grant by ST for the use of such third party products or services, or any intellectual property contained therein or considered as a warranty covering the use in any manner whatsoever of such third party products or services or any intellectual property contained therein.

UNLESS OTHERWISE SET FORTH IN ST’S TERMS AND CONDITIONS OF SALE ST DISCLAIMS ANY EXPRESS OR IMPLIED WARRANTY WITH RESPECT TO THE USE AND/OR SALE OF ST PRODUCTS INCLUDING WITHOUT LIMITATION IMPLIED WARRANTIES OF MERCHANTABILITY, FITNESS FOR A PARTICULAR PURPOSE (AND THEIR EQUIVALENTS UNDER THE LAWS OF ANY JURISDICTION), OR INFRINGEMENT OF ANY PATENT, COPYRIGHT OR OTHER INTELLECTUAL PROPERTY RIGHT.

UNLESS EXPRESSLY APPROVED IN WRITING BY AN AUTHORIZED ST REPRESENTATIVE, ST PRODUCTS ARE NOT RECOMMENDED, AUTHORIZED OR WARRANTED FOR USE IN MILITARY, AIR CRAFT, SPACE, LIFE SAVING, OR LIFE SUSTAINING APPLICATIONS, NOR IN PRODUCTS OR SYSTEMS WHERE FAILURE OR MALFUNCTION MAY RESULT IN PERSONAL INJURY, DEATH, OR SEVERE PROPERTY OR ENVIRONMENTAL DAMAGE. ST PRODUCTS WHICH ARE NOT SPECIFIED AS "AUTOMOTIVE GRADE" MAY ONLY BE USED IN AUTOMOTIVE APPLICATIONS AT USER’S OWN RISK.

Resale of ST products with provisions different from the statements and/or technical features set forth in this document shall immediately void any warranty granted by ST for the ST product or service described herein and shall not create or extend in any manner whatsoever, any liability of ST.

ST and the ST logo are trademarks or registered trademarks of ST in various countries.

Information in this document supersedes and replaces all information previously supplied.

The ST logo is a registered trademark of STMicroelectronics. All other names are the property of their respective owners.

© 2006 STMicroelectronics - All rights reserved

STMicroelectronics group of companies

Australia - Belgium - Brazil - Canada - China - Czech Republic - Finland - France - Germany - Hong Kong - India - Israel - Italy - Japan - Malaysia - Malta - Morocco - Singapore - Spain - Sweden - Switzerland - United Kingdom - United States of America

www.st.com