RM0351
Reference manual

STM32L47xxx, STM32L48xxx, STM32L49xxx and STM32L4Axxx advanced Arm®-based 32-bit MCUs

Introduction

This reference manual targets application developers. It provides complete information on how to use the STM32L47xxx/STM32L48xxx/STM32L49xxx/STM32L4Axxx microcontroller memory and peripherals.

The STM32L47xxx/STM32L48xxx/STM32L49xxx/STM32L4Axxx is a family of microcontrollers with different memory sizes, packages and peripherals.

For ordering information, mechanical and electrical device characteristics please refer to the corresponding datasheets.

For information on the Arm® Cortex®-M4 core, please refer to the Cortex®-M4 Technical Reference Manual.

Related documents

- Cortex®-M4 Technical Reference Manual, available from: http://infocenter.arm.com
- STM32L471xx, STM32L475xx, STM32L476xx, STM32L486xx, STM32L496xx and STM32L4A6xx datasheets
- STM32 Cortex®-M4 MCUs and MPUs programming manual (PM0214)

In this document, the following short names, or combinations of them, may be used to refer to subsets of the above-listed part numbers:

- STM32L47x, STM32L48x, STM32L49x, STM32L4Ax
- STM32L471, STM32L4x5, STM32L4x6

Contents

1 Documentation conventions 69

1.1 General information 69

1.2 List of abbreviations for registers 69

1.3 Glossary 70

1.4 Availability of peripherals 70

2 System and memory overview 71

2.1 System architecture 71

2.1.1 S0: I-bus 73

2.1.2 S1: D-bus 73

2.1.3 S2: S-bus 73

2.1.4 S3, S4: DMA-bus 74

2.1.5 S5: DMA2D-bus 74

2.1.6 BusMatrix 74

2.2 Memory organization 75

2.2.1 Introduction 75

2.2.2 Memory map and register boundary addresses 76

2.3 Bit banding 86

2.4 Embedded SRAM 87

2.4.1 SRAM2 parity check 87

2.4.2 SRAM2 Write protection 88

2.4.3 SRAM2 Read protection 90

2.4.4 SRAM2 Erase 90

2.5 Flash memory overview 90

2.6 Boot configuration 91

2.6.1 Boot configuration for STM32L47x/L48x devices 91

2.6.2 Boot configuration for STM32L49x/L4Ax devices 93

3 Embedded Flash memory (FLASH) 96

3.1 Introduction 96

3.2 FLASH main features 96

3.3 FLASH functional description 96

3.3.1 Flash memory organization 96

3.3.2 Error code correction (ECC) 99
3.3.3 Read access latency 100
3.3.4 Adaptive real-time memory accelerator (ART Accelerator™) 101
3.3.5 Flash program and erase operations 103
3.3.6 Flash main memory erase sequences **104**
3.3.7 Flash main memory programming sequences 105
3.3.8 Read-while-write (RWW) 108
3.4 FLASH option bytes 110
3.4.1 Option bytes description 110
3.4.2 Option bytes programming 116
3.5 FLASH memory protection 118
3.5.1 Read protection (RDP) 118
3.5.2 Proprietary code readout protection (PCROP) 121
3.5.3 Write protection (WRP) 122
3.6 FLASH interrupts 123
3.7 FLASH registers 124
3.7.1 Flash access control register (FLASH_ACR) 124
3.7.2 Flash Power-down key register (FLASH_PDKEYR) 125
3.7.3 Flash key register (FLASH_KEYR) 126
3.7.4 Flash option key register (FLASH_OPTKEYR) 126
3.7.5 Flash status register (FLASH_SR) 127
3.7.6 Flash control register (FLASH_CR) 128
3.7.7 Flash ECC register (FLASH_ECCR) 130
3.7.8 Flash option register (FLASH_OPTR) 131
3.7.9 Flash Bank 1 PCROP Start address register (FLASH_PCROP1SR) . 133
3.7.10 Flash Bank 1 PCROP End address register (FLASH_PCROP1ER) . . 134
3.7.11 Flash Bank 1 WRP area A address register (FLASH_WRP1AR) 134
3.7.12 Flash Bank 1 WRP area B address register (FLASH_WRP1BR) 135
3.7.13 Flash Bank 2 PCROP Start address register (FLASH_PCROP2SR) . 135
3.7.14 Flash Bank 2 PCROP End address register (FLASH_PCROP2ER) . . 136
3.7.15 Flash Bank 2 WRP area A address register (FLASH_WRP2AR) 136
3.7.16 Flash Bank 2 WRP area B address register (FLASH_WRP2BR) 137
3.7.17 FLASH register map 138

4 Firewall (FW) 140
4.1 Introduction 140

4.2 Firewall main features 140
4.3 Firewall functional description 141
4.3.1 Firewall AMBA bus snoop 141
4.3.2 Functional requirements 141
4.3.3 Firewall segments 142
4.3.4 Segment accesses and properties 143
4.3.5 Firewall initialization 144
4.3.6 Firewall states 145
4.4 Firewall registers 147
4.4.1 Code segment start address (FW_CSSA) 147
4.4.2 Code segment length (FW_CSL) 147
4.4.3 Non-volatile data segment start address (FW_NVDSSA) 148
4.4.4 Non-volatile data segment length (FW_NVDSL) 148
4.4.5 Volatile data segment start address (FW_VDSSA) 149
4.4.6 Volatile data segment length (FW_VDSL) 149
4.4.7 Configuration register (FW_CR) 150
4.4.8 Firewall register map 152

5 Power control (PWR) 153
5.1 Power supplies 153
5.1.1 Independent analog peripherals supply 154
5.1.2 Independent I/O supply rail 155
5.1.3 Independent USB transceivers supply 155
5.1.4 Independent LCD supply 156
5.1.5 Battery backup domain 156
5.1.6 Voltage regulator 157
5.1.7 VDD12 domain 158
5.1.8 Dynamic voltage scaling management 160
5.2 Power supply supervisor 161
5.2.1 Power-on reset (POR) / power-down reset (PDR) / brown-out reset (BOR) 161
5.2.2 Programmable voltage detector (PVD) 162
5.2.3 Peripheral Voltage Monitoring (PVM) 163
5.3 Low-power modes 164
5.3.1 Run mode 170
5.3.2 Low-power run mode (LP run) 170
5.3.3 Low power modes 171

5.3.4 Sleep mode 172
5.3.5 Low-power sleep mode (LP sleep) 173
5.3.6 Stop 0 mode 174
5.3.7 Stop 1 mode 176
5.3.8 Stop 2 mode 177
5.3.9 Standby mode 179
5.3.10 Shutdown mode 182
5.3.11 Auto-wakeup from low-power mode 183
5.4 PWR registers 184
5.4.1 Power control register 1 (PWR_CR1) 184
5.4.2 Power control register 2 (PWR_CR2) 185
5.4.3 Power control register 3 (PWR_CR3) 186
5.4.4 Power control register 4 (PWR_CR4) 187
5.4.5 Power status register 1 (PWR_SR1) 188
5.4.6 Power status register 2 (PWR_SR2) 189
5.4.7 Power status clear register (PWR_SCR) 191
5.4.8 Power Port A pull-up control register (PWR_PUCRA) 191
5.4.9 Power Port A pull-down control register (PWR_PDCRA) 192
5.4.10 Power Port B pull-up control register (PWR_PUCRB) 192
5.4.11 Power Port B pull-down control register (PWR_PDCRB) 193
5.4.12 Power Port C pull-up control register (PWR_PUCRC) 193
5.4.13 Power Port C pull-down control register (PWR_PDCRC) 194
5.4.14 Power Port D pull-up control register (PWR_PUCRD) 194
5.4.15 Power Port D pull-down control register (PWR_PDCRD) 195
5.4.16 Power Port E pull-up control register (PWR_PUCRE) 195
5.4.17 Power Port E pull-down control register (PWR_PDCRE) 196
5.4.18 Power Port F pull-up control register (PWR_PUCRF) 196
5.4.19 Power Port F pull-down control register (PWR_PDCRF) 197
5.4.20 Power Port G pull-up control register (PWR_PUCRG) 197
5.4.21 Power Port G pull-down control register (PWR_PDCRG) 198
5.4.22 Power Port H pull-up control register (PWR_PUCRH) 198
5.4.23 Power Port H pull-down control register (PWR_PDCRH) 199
5.4.24 Power Port I pull-up control register (PWR_PUCRI) 199
5.4.25 Power Port I pull-down control register (PWR_PDCRI) 200
5.4.26 PWR register map and reset value table 201

6 Reset and clock control (RCC) 203

6.1 Reset 203
6.1.1 Power reset 203
6.1.2 System reset 203
6.1.3 Backup domain reset 204
6.2 Clocks 205
6.2.1 HSE clock 211
6.2.2 HSI16 clock 212
6.2.3 MSI clock 213
6.2.4 HSI48 clock (only valid for STM32L49x/L4Ax devices) 213
6.2.5 PLL 214
6.2.6 LSE clock 215
6.2.7 LSI clock 215
6.2.8 System clock (SYSCLK) selection 215
6.2.9 Clock source frequency versus voltage scaling 216
6.2.10 Clock security system (CSS) 216
6.2.11 Clock security system on LSE 216
6.2.12 USB Clock 217
6.2.13 ADC clock 217
6.2.14 RTC clock 217
6.2.15 Timer clock 218
6.2.16 Watchdog clock 218
6.2.17 Clock-out capability 218
6.2.18 Internal/external clock measurement with TIM15/TIM16/TIM17 219
6.2.19 Peripheral clock enable register (RCC_AHBxENR, RCC_APBxENRy) 221
6.3 Low-power modes 222
6.4 RCC registers 223
6.4.1 Clock control register (RCC_CR) 223
6.4.2 Internal clock sources calibration register (RCC_ICSCR) 226
6.4.3 Clock configuration register (RCC_CFGR) 227
6.4.4 PLL configuration register (RCC_PLLCFGR) 229
6.4.5 PLLSAI1 configuration register (RCC_PLLSAI1CFGR) 232
6.4.6 PLLSAI2 configuration register (RCC_PLLSAI2CFGR) 235
6.4.7 Clock interrupt enable register (RCC_CIER) 236
6.4.8 Clock interrupt flag register (RCC_CIFR) 238
6.4.9 Clock interrupt clear register (RCC_CICR) 239
6.4.10 AHB1 peripheral reset register (RCC_AHB1RSTR) 241

6.4.11 AHB2 peripheral reset register (RCC_AHB2RSTR) 242
6.4.12 AHB3 peripheral reset register (RCC_AHB3RSTR) 244
6.4.13 APB1 peripheral reset register 1 (RCC_APB1RSTR1) 244
6.4.14 APB1 peripheral reset register 2 (RCC_APB1RSTR2) 247
6.4.15 APB2 peripheral reset register (RCC_APB2RSTR) 248
6.4.16 AHB1 peripheral clock enable register (RCC_AHB1ENR) 249
6.4.17 AHB2 peripheral clock enable register (RCC_AHB2ENR) 251
6.4.18 AHB3 peripheral clock enable register(RCC_AHB3ENR) 252
6.4.19 APB1 peripheral clock enable register 1 (RCC_APB1ENR1) 253
6.4.20 APB1 peripheral clock enable register 2 (RCC_APB1ENR2) 256
6.4.21 APB2 peripheral clock enable register (RCC_APB2ENR) 258
6.4.22 AHB1 peripheral clocks enable in Sleep and Stop modes register (RCC_AHB1SMENR) 259
6.4.23 AHB2 peripheral clocks enable in Sleep and Stop modes register (RCC_AHB2SMENR) 261
6.4.24 AHB3 peripheral clocks enable in Sleep and Stop modes register (RCC_AHB3SMENR) 263
6.4.25 APB1 peripheral clocks enable in Sleep and Stop modes register 1 (RCC_APB1SMENR1) 263
6.4.26 APB1 peripheral clocks enable in Sleep and Stop modes register 2 (RCC_APB1SMENR2) 266
6.4.27 APB2 peripheral clocks enable in Sleep and Stop modes register (RCC_APB2SMENR) 268
6.4.28 Peripherals independent clock configuration register (RCC_CCIPR) . 269
6.4.29 Backup domain control register (RCC_BDCR) 272
6.4.30 Control/status register (RCC_CSR) 274
6.4.31 Clock recovery RC register (RCC_CRRCR) 276
6.4.32 Peripherals independent clock configuration register (RCC_CCIPR2) 277
6.4.33 RCC register map 277

7 Clock recovery system (CRS) 283
7.1 Introduction 283
7.2 CRS main features 283
7.3 CRS implementation 283
7.4 CRS functional description 284
7.4.1 CRS block diagram 284
7.4.2 Synchronization input 284
7.4.3 Frequency error measurement 285

7.4.4 Frequency error evaluation and automatic trimming 286
7.4.5 CRS initialization and configuration 286
7.5 CRS low-power modes 287
7.6 CRS interrupts 287
7.7 CRS registers 288
7.7.1 CRS control register (CRS_CR) 288
7.7.2 CRS configuration register (CRS_CFGR) 289
7.7.3 CRS interrupt and status register (CRS_ISR) 290
7.7.4 CRS interrupt flag clear register (CRS_ICR) 292
7.7.5 CRS register map 293

8 General-purpose I/Os (GPIO) 294
8.1 Introduction 294
8.2 GPIO main features 294
8.3 GPIO implementation 294
8.4 GPIO functional description 295
8.4.1 General-purpose I/O (GPIO) 297
8.4.2 I/O pin alternate function multiplexer and mapping 297
8.4.3 I/O port control registers 299
8.4.4 I/O port data registers 299
8.4.5 I/O data bitwise handling 299
8.4.6 GPIO locking mechanism 299
8.4.7 I/O alternate function input/output 300
8.4.8 External interrupt/wakeup lines 300
8.4.9 Input configuration 300
8.4.10 Output configuration 301
8.4.11 Alternate function configuration 302
8.4.12 Analog configuration 303
8.4.13 Using the HSE or LSE oscillator pins as GPIOs 303
8.4.14 Using the GPIO pins in the RTC supply domain 303
8.4.15 Using PH3 as GPIO (only for STM32L49x/L4Ax devices) 304
8.5 GPIO registers 305
8.5.1 GPIO port mode register (GPIOx_MODER) (x =A to I) 305
8.5.2 GPIO port output type register (GPIOx_OTYPER) (x = A to I) 306

8.5.3 GPIO port output speed register (GPIOx_OSPEEDR) (x = A to I) 306
8.5.4 GPIO port pull-up/pull-down register (GPIOx_PUPDR) (x = A to I) 306
8.5.5 GPIO port input data register (GPIOx_IDR) (x = A to I) 307
8.5.6 GPIO port output data register (GPIOx_ODR) (x = A to I) 307
8.5.7 GPIO port bit set/reset register (GPIOx_BSRR) (x = A to I) 308
8.5.8 GPIO port configuration lock register (GPIOx_LCKR) (x = A to I) 308
8.5.9 GPIO alternate function low register (GPIOx_AFRL) (x = A to I) 309
8.5.10 GPIO alternate function high register (GPIOx_AFRH) (x = A to I) 310
8.5.11 GPIO port bit reset register (GPIOx_BRR) (x = A to I) 311
8.5.12 GPIO port analog switch control register (GPIOx_ASCR)(x = A to H) . 312
8.5.13 GPIO register map 313

9 System configuration controller (SYSCFG) 315

9.1 SYSCFG main features 315
9.2 SYSCFG registers 315
9.2.1 SYSCFG memory remap register (SYSCFG_MEMRMP) 315
9.2.2 SYSCFG configuration register 1 (SYSCFG_CFGR1) 316
9.2.3 SYSCFG external interrupt configuration register 1 (SYSCFG_EXTICR1) 318
9.2.4 SYSCFG external interrupt configuration register 2 (SYSCFG_EXTICR2) 319
9.2.5 SYSCFG external interrupt configuration register 3 (SYSCFG_EXTICR3) 320
9.2.6 SYSCFG external interrupt configuration register 4 (SYSCFG_EXTICR4) 322
9.2.7 SYSCFG SRAM2 control and status register (SYSCFG_SCSR) 323
9.2.8 SYSCFG configuration register 2 (SYSCFG_CFGR2) 323
9.2.9 SYSCFG SRAM2 write protection register (SYSCFG_SWPR) 324
9.2.10 SYSCFG SRAM2 key register (SYSCFG_SKR) 325
9.2.11 SYSCFG SRAM2 write protection register 2 (SYSCFG_SWPR2) . . . 325
9.2.12 SYSCFG register map 326

10 Peripherals interconnect matrix 328

10.1 Introduction 328
10.2 Connection summary 328
10.3 Interconnection details 329
10.3.1 From timer (TIM1/TIM2/TIM3/TIM4/TIM5/TIM8/TIM15/TIM16/TIM17) to timer (TIM1/TIM2/TIM3/TIM4/TIM5/TIM8/TIM15) 329
10.3.2 From timer (TIM1/TIM2/TIM3/TIM4/TIM6/TIM8/TIM15) and EXTI to ADC (ADC1/ADC2/ADC3) 330
10.3.3 From ADC (ADC1/ADC2/ADC3) to timer (TIM1/TIM8) 331
10.3.4 From timer (TIM2/TIM4/TIM5/TIM6/TIM7/TIM8) and EXTI to DAC (DAC_CH1/DAC_CH2) 331
10.3.5 From timer (TIM1/TIM3/TIM4/TIM6/TIM7/TIM8/TIM16) and EXTI to DFSDM1 331
10.3.6 From DFSDM1 to timer (TIM1/TIM8/TIM15/TIM16/TIM17) 332
10.3.7 From HSE, LSE, LSI, MSI, MCO, RTC to timer (TIM2/TIM15/TIM16/TIM17) 332
10.3.8 From RTC, COMP1, COMP2 to low-power timer (LPTIM1/LPTIM2) . . 333
10.3.9 From timer (TIM1/TIM2/TIM3/TIM8/TIM15) to comparators (COMP1/COMP2) 333
10.3.10 From ADC (ADC1) to ADC (ADC2) 333
10.3.11 From USB to timer (TIM2) 334
10.3.12 From internal analog source to ADC (ADC1/ADC2/ADC3) and OPAMP (OPAMP1/OPAMP2) 334
10.3.13 From comparators (COMP1/COMP2) to timers (TIM1/TIM2/TIM3/TIM8/TIM15/TIM16/TIM17) 335
10.3.14 From system errors to timers (TIM1/TIM8/TIM15/TIM16/TIM17) 335
10.3.15 From timers (TIM16/TIM17) to IRTIM 336
10.3.16 From ADC (ADC1/ADC2/ADC3) to DFSDM (only for STM32L49x/L4Ax devices) 336

11 Direct memory access controller (DMA) 337
11.1 Introduction 337
11.2 DMA main features 337
11.3 DMA implementation 338
11.3.1 DMA1 and DMA2 338
11.3.2 DMA request mapping 338
11.4 DMA functional description 341
11.4.1 DMA block diagram 341
11.4.2 DMA transfers 343
11.4.3 DMA arbitration 343

11.4.4 DMA channels 344
11.4.5 DMA data width, alignment and endianness 348
11.4.6 DMA error management 349
11.5 DMA interrupts 350
11.6 DMA registers 350
11.6.1 DMA interrupt status register (DMA_ISR) 350
11.6.2 DMA interrupt flag clear register (DMA_IFCR) 353
11.6.3 DMA channel x configuration register (DMA_CCRx) 354
11.6.4 DMA channel x number of data to transfer register (DMA_CNDTRx) . 357
11.6.5 DMA channel x peripheral address register (DMA_CPARx) 357
11.6.6 DMA channel x memory address register (DMA_CMARx) 358
11.6.7 DMA channel selection register (DMA_CSELR) 359
11.6.8 DMA register map 359

12 Chrom-ART Accelerator controller (DMA2D) 362
12.1 DMA2D introduction 362
12.2 DMA2D main features 362
12.3 DMA2D functional description 363
12.3.1 General description 363
12.3.2 DMA2D control 364
12.3.3 DMA2D foreground and background FIFOs 364
12.3.4 DMA2D foreground and background pixel format converter (PFC) . . . 365
12.3.5 DMA2D foreground and background CLUT interface 367
12.3.6 DMA2D blender 368
12.3.7 DMA2D output PFC 368
12.3.8 DMA2D output FIFO 369
12.3.9 DMA2D AHB master port timer 370
12.3.10 DMA2D transactions 370
12.3.11 DMA2D configuration 370
12.3.12 DMA2D transfer control (start, suspend, abort and completion) 373
12.3.13 Watermark 373
12.3.14 Error management 373
12.3.15 AHB dead time 374
12.4 DMA2D interrupts 374
12.5 DMA2D registers 375
12.5.1 DMA2D control register (DMA2D_CR) 375

12.5.2 DMA2D interrupt status register (DMA2D_ISR) 377
12.5.3 DMA2D interrupt flag clear register (DMA2D_IFCR) 378
12.5.4 DMA2D foreground memory address register (DMA2D_FGMAR) . . . 378
12.5.5 DMA2D foreground offset register (DMA2D_FGOR) 379
12.5.6 DMA2D background memory address register (DMA2D_BGMAR) . . 379
12.5.7 DMA2D background offset register (DMA2D_BGOR) 380
12.5.8 DMA2D foreground PFC control register (DMA2D_FGPFCCR) 381
12.5.9 DMA2D foreground color register (DMA2D_FGCOLR) 383
12.5.10 DMA2D background PFC control register (DMA2D_BGPFCCR) 384
12.5.11 DMA2D background color register (DMA2D_BGCOLR) 386
12.5.12 DMA2D foreground CLUT memory address register (DMA2D_FGCMAR) 386
12.5.13 DMA2D background CLUT memory address register (DMA2D_BGCMAR) 387
12.5.14 DMA2D output PFC control register (DMA2D_OPFCCR) 387
12.5.15 DMA2D output color register (DMA2D_OCOLR) 388
12.5.16 DMA2D output memory address register (DMA2D_OMAR) 390
12.5.17 DMA2D output offset register (DMA2D_OOR) 390
12.5.18 DMA2D number of line register (DMA2D_NLR) 390
12.5.19 DMA2D line watermark register (DMA2D_LWR) 391
12.5.20 DMA2D AHB master timer configuration register (DMA2D_AMTCR) . 391
12.5.21 DMA2D foreground CLUT (DMA2D_FGCLUT[y]) 392
12.5.22 DMA2D background CLUT (DMA2D_BGCLUT[y]) 392
12.5.23 DMA2D register map 394

13 Nested vectored interrupt controller (NVIC) 396
13.1 NVIC main features 396
13.2 SysTick calibration value register 396
13.3 Interrupt and exception vectors 397

14 Extended interrupts and events controller (EXTI) 401
14.1 Introduction 401
14.2 EXTI main features 401
14.3 EXTI functional description 401
14.3.1 EXTI block diagram 402
14.3.2 Wakeup event management 402
14.3.3 Peripherals asynchronous Interrupts 403

14.3.4 Hardware interrupt selection 403
14.3.5 Hardware event selection 403
14.3.6 Software interrupt/event selection 403
14.4 EXTI interrupt/event line mapping 403
14.5 EXTI registers 406
14.5.1 Interrupt mask register 1 (EXTI_IMR1) 406
14.5.2 Event mask register 1 (EXTI_EMR1) 406
14.5.3 Rising trigger selection register 1 (EXTI_RTSR1) 406
14.5.4 Falling trigger selection register 1 (EXTI_FTSR1) 407
14.5.5 Software interrupt event register 1 (EXTI_SWIER1) 408
14.5.6 Pending register 1 (EXTI_PR1) 409
14.5.7 Interrupt mask register 2 (EXTI_IMR2) 409
14.5.8 Event mask register 2 (EXTI_EMR2) 410
14.5.9 Rising trigger selection register 2 (EXTI_RTSR2) 410
14.5.10 Falling trigger selection register 2 (EXTI_FTSR2) 411
14.5.11 Software interrupt event register 2 (EXTI_SWIER2) 411
14.5.12 Pending register 2 (EXTI_PR2) 412
14.5.13 EXTI register map 413

15 Cyclic redundancy check calculation unit (CRC) 414
15.1 Introduction 414
15.2 CRC main features 414
15.3 CRC functional description 415
15.3.1 CRC block diagram 415
15.3.2 CRC internal signals 415
15.3.3 CRC operation 415
15.4 CRC registers 417
15.4.1 CRC data register (CRC_DR) 417
15.4.2 CRC independent data register (CRC_IDR) 417
15.4.3 CRC control register (CRC_CR) 418
15.4.4 CRC initial value (CRC_INIT) 418
15.4.5 CRC polynomial (CRC_POL) 419
15.4.6 CRC register map 419

16 Flexible static memory controller (FSMC) 420
16.1 Introduction 420

16.2 FMC main features 420
16.3 FMC block diagram 421
16.4 AHB interface 422
16.4.1 Supported memories and transactions 422
16.5 External device address mapping 423
16.5.1 NOR/PSRAM address mapping 424
16.5.2 NAND Flash memory address mapping 425
16.6 NOR Flash/PSRAM controller 426
16.6.1 External memory interface signals 427
16.6.2 Supported memories and transactions 429
16.6.3 General timing rules 430
16.6.4 NOR Flash/PSRAM controller asynchronous transactions 431
16.6.5 Synchronous transactions 448
16.6.6 NOR/PSRAM controller registers 455
16.7 NAND Flash controller 462
16.7.1 External memory interface signals 462
16.7.2 NAND Flash supported memories and transactions 464
16.7.3 Timing diagrams for NAND Flash memory 464
16.7.4 NAND Flash operations 465
16.7.5 NAND Flash prewait functionality 466
16.7.6 Computation of the error correction code (ECC) in NAND Flash memory 467
16.7.7 NAND Flash controller registers 468
16.7.8 FMC register map 474

17 Quad-SPI interface (QUADSPI) 476
17.1 Introduction 476
17.2 QUADSPI main features 476
17.3 QUADSPI implementation 476
17.4 QUADSPI functional description 477
17.4.1 QUADSPI block diagram 477
17.4.2 QUADSPI pins 477
17.4.3 QUADSPI command sequence 478
17.4.4 QUADSPI signal interface protocol modes 480
17.4.5 QUADSPI indirect mode 483
17.4.6 QUADSPI status flag polling mode 484

17.4.7 QUADSPI memory-mapped mode 485
17.4.8 QUADSPI Flash memory configuration 485
17.4.9 QUADSPI delayed data sampling 486
17.4.10 QUADSPI configuration 486
17.4.11 QUADSPI usage 487
17.4.12 Sending the instruction only once 488
17.4.13 QUADSPI error management 489
17.4.14 QUADSPI busy bit and abort functionality 489
17.4.15 nCS behavior 489
17.5 QUADSPI interrupts 491
17.6 QUADSPI registers 492
17.6.1 QUADSPI control register (QUADSPI_CR) 492
17.6.2 QUADSPI device configuration register (QUADSPI_DCR) 495
17.6.3 QUADSPI status register (QUADSPI_SR) 496
17.6.4 QUADSPI flag clear register (QUADSPI_FCR) 497
17.6.5 QUADSPI data length register (QUADSPI_DLR) 497
17.6.6 QUADSPI communication configuration register (QUADSPI_CCR) . . 498
17.6.7 QUADSPI address register (QUADSPI_AR) 500
17.6.8 QUADSPI alternate bytes registers (QUADSPI_ABR) 501
17.6.9 QUADSPI data register (QUADSPI_DR) 501
17.6.10 QUADSPI polling status mask register (QUADSPI _PSMKR) 502
17.6.11 QUADSPI polling status match register (QUADSPI _PSMAR) 502
17.6.12 QUADSPI polling interval register (QUADSPI _PIR) 503
17.6.13 QUADSPI low-power timeout register (QUADSPI_LPTR) 503
17.6.14 QUADSPI register map 504

18 Analog-to-digital converters (ADC) 505
18.1 Introduction 505
18.2 ADC main features 506
18.3 ADC implementation 507
18.4 ADC functional description 508
18.4.1 ADC block diagram 508
18.4.2 ADC pins and internal signals 509
18.4.3 ADC clocks 510
18.4.4 ADC1/2/3 connectivity 512
18.4.5 Slave AHB interface 515

18.4.6 ADC Deep-power-down mode (DEEPPWD) and ADC voltage regulator (ADVREGEN) . . . 515
18.4.7 Single-ended and differential input channels . . . 516
18.4.8 Calibration (ADCAL, ADCALDIF, ADC_CALFACT) . . . 516
18.4.9 ADC on-off control (ADEN, ADDIS, ADRDY) . . . 519
18.4.10 Constraints when writing the ADC control bits . . . 520
18.4.11 Channel selection (SQRx, JSQRx) . . . 521
18.4.12 Channel-wise programmable sampling time (SMPR1, SMPR2) . . . 522
18.4.13 Single conversion mode (CONT=0) . . . 523
18.4.14 Continuous conversion mode (CONT=1) . . . 523
18.4.15 Starting conversions (ADSTART, JADSTART) . . . 524
18.4.16 ADC timing . . . 525
18.4.17 Stopping an ongoing conversion (ADSTP, JADSTP) . . . 525
18.4.18 Conversion on external trigger and trigger polarity (EXTSEL, EXTEN,JEXTSEL, JEXTEN) . . . 527
18.4.19 Injected channel management . . . 529
18.4.20 Discontinuous mode (DISCEN, DISCNUM, JDISCEN) . . . 531
18.4.21 Queue of context for injected conversions . . . 532
18.4.22 Programmable resolution (RES) - fast conversion mode . . . 540
18.4.23 End of conversion, end of sampling phase (EOC, JEOC, EOSMP) . . . 541
18.4.24 End of conversion sequence (EOS, JEOS) . . . 541
18.4.25 Timing diagrams example (single/continuous modes, hardware/software triggers) . . . 542
18.4.26 Data management . . . 544
18.4.27 Managing conversions using the DFSDM . . . 549
18.4.28 Dynamic low-power features . . . 550
18.4.29 Analog window watchdog (AWD1EN, JAWD1EN, AWD1SGL, AWD1CH, AWD2CH, AWD3CH, AWD_HTx, AWD_LTx, AWDx) . . . 555
18.4.30 Oversampler . . . 559
18.4.31 Dual ADC modes . . . 565
18.4.32 Temperature sensor . . . 579
18.4.33 VBAT supply monitoring . . . 581
18.4.34 Monitoring the internal voltage reference . . . 581
18.5 ADC interrupts . . . 583
18.6 ADC registers (for each ADC) . . . 585
18.6.1 ADC interrupt and status register (ADC_ISR) . . . 585
18.6.2 ADC interrupt enable register (ADC_IER) . . . 587
18.6.3 ADC control register (ADC_CR) . . . 589

18.6.4 ADC configuration register (ADC_CFGR) 592
18.6.5 ADC configuration register 2 (ADC_CFGR2) 596
18.6.6 ADC sample time register 1 (ADC_SMPR1) 598
18.6.7 ADC sample time register 2 (ADC_SMPR2) 599
18.6.8 ADC watchdog threshold register 1 (ADC_TR1) 600
18.6.9 ADC watchdog threshold register 2 (ADC_TR2) 601
18.6.10 ADC watchdog threshold register 3 (ADC_TR3) 601
18.6.11 ADC regular sequence register 1 (ADC_SQR1) 602
18.6.12 ADC regular sequence register 2 (ADC_SQR2) 603
18.6.13 ADC regular sequence register 3 (ADC_SQR3) 604
18.6.14 ADC regular sequence register 4 (ADC_SQR4) 605
18.6.15 ADC regular data register (ADC_DR) 606
18.6.16 ADC injected sequence register (ADC_JSQR) 606
18.6.17 ADC offset y register (ADC_OFRy) 608
18.6.18 ADC injected channel y data register (ADC_JDRy) 609
18.6.19 ADC Analog Watchdog 2 Configuration Register (ADC_AWD2CR) . . 609
18.6.20 ADC Analog Watchdog 3 Configuration Register (ADC_AWD3CR) . . 610
18.6.21 ADC Differential mode Selection Register (ADC_DIFSEL) 610
18.6.22 ADC Calibration Factors (ADC_CALFACT) 611
18.7 ADC common registers 611
18.7.1 ADC common status register (ADC_CSR) 611
18.7.2 ADC common control register (ADC_CCR) 613
18.7.3 ADC common regular data register for dual mode (ADC_CDR) 616
18.8 ADC register map 616

19 Digital-to-analog converter (DAC) 620
19.1 Introduction 620
19.2 DAC main features 620
19.3 DAC implementation 621
19.4 DAC functional description 622
19.4.1 DAC block diagram 622
19.4.2 DAC channel enable 623
19.4.3 DAC data format 623
19.4.4 DAC conversion 625
19.4.5 DAC output voltage 625
19.4.6 DAC trigger selection 625

19.4.7 DMA requests 626
19.4.8 DAC noise generation 627
19.4.9 DAC triangle-wave generation 628
19.4.10 DAC channel modes 629
19.4.11 DAC channel buffer calibration 632
19.4.12 Dual DAC channel conversion modes (if dual channels are available) 633
19.5 DAC low-power modes 637
19.6 DAC interrupts 638
19.7 DAC registers 639
19.7.1 DAC control register (DAC_CR) 639
19.7.2 DAC software trigger register (DAC_SWTRGR) 642
19.7.3 DAC channel1 12-bit right-aligned data holding register (DAC_DHR12R1) 643
19.7.4 DAC channel1 12-bit left aligned data holding register (DAC_DHR12L1) 643
19.7.5 DAC channel1 8-bit right aligned data holding register (DAC_DHR8R1) 644
19.7.6 DAC channel2 12-bit right aligned data holding register (DAC_DHR12R2) 644
19.7.7 DAC channel2 12-bit left aligned data holding register (DAC_DHR12L2) 645
19.7.8 DAC channel2 8-bit right-aligned data holding register (DAC_DHR8R2) 645
19.7.9 Dual DAC 12-bit right-aligned data holding register (DAC_DHR12RD) 646
19.7.10 Dual DAC 12-bit left aligned data holding register (DAC_DHR12LD) 646
19.7.11 Dual DAC 8-bit right aligned data holding register (DAC_DHR8RD) 647
19.7.12 DAC channel1 data output register (DAC_DOR1) 647
19.7.13 DAC channel2 data output register (DAC_DOR2) 648
19.7.14 DAC status register (DAC_SR) 648
19.7.15 DAC calibration control register (DAC_CCR) 650
19.7.16 DAC mode control register (DAC_MCR) 650
19.7.17 DAC channel1 sample and hold sample time register (DAC_SHSR1) 652
19.7.18 DAC channel2 sample and hold sample time register (DAC_SHSR2) 652
19.7.19 DAC sample and hold time register (DAC_SHHR) 653

19.7.20 DAC sample and hold refresh time register (DAC_SHRR) 653
19.7.21 DAC register map 655

20 Digital camera interface (DCMI) 657
20.1 Introduction 657
20.2 DCMI main features 657
20.3 DCMI functional description 657
20.3.1 DCMI block diagram 657
20.3.2 DCMI pins 658
20.3.3 DCMI clocks 659
20.3.4 DCMI DMA interface 659
20.3.5 DCMI physical interface 659
20.3.6 DCMI synchronization 661
20.3.7 DCMI capture modes 663
20.3.8 DCMI crop feature 664
20.3.9 DCMI JPEG format 665
20.3.10 DCMI FIFO 665
20.3.11 DCMI data format description 666
20.4 DCMI interrupts 668
20.5 DCMI registers 668
20.5.1 DCMI control register (DCMI_CR) 668
20.5.2 DCMI status register (DCMI_SR) 671
20.5.3 DCMI raw interrupt status register (DCMI_RIS) 672
20.5.4 DCMI interrupt enable register (DCMI_IER) 673
20.5.5 DCMI masked interrupt status register (DCMI_MIS) 674
20.5.6 DCMI interrupt clear register (DCMI_ICR) 675
20.5.7 DCMI embedded synchronization code register (DCMI_ESCR) 676
20.5.8 DCMI embedded synchronization unmask register (DCMI_ESUR) . . 677
20.5.9 DCMI crop window start (DCMI_CWSTRT) 678
20.5.10 DCMI crop window size (DCMI_CWSIZE) 678
20.5.11 DCMI data register (DCMI_DR) 679
20.5.12 DCMI register map 680

21 Voltage reference buffer (VREFBUF) 681
21.1 Introduction 681
21.2 VREFBUF functional description 681

21.3 VREFBUF trimming 682
21.4 VREFBUF registers 683
21.4.1 VREFBUF control and status register (VREFBUF_CSR) 683
21.4.2 VREFBUF calibration control register (VREFBUF_CCR) 684
21.4.3 VREFBUF register map 684

22 Comparator (COMP) 685
22.1 Introduction 685
22.2 COMP main features 685
22.3 COMP functional description 686
22.3.1 COMP block diagram 686
22.3.2 COMP pins and internal signals 686
22.3.3 COMP reset and clocks 687
22.3.4 Comparator LOCK mechanism 687
22.3.5 Window comparator 688
22.3.6 Hysteresis 688
22.3.7 Comparator output blanking function 689
22.3.8 COMP power and speed modes 690
22.4 COMP low-power modes 690
22.5 COMP interrupts 690
22.6 COMP registers 691
22.6.1 Comparator 1 control and status register (COMP1_CSR) 691
22.6.2 Comparator 2 control and status register (COMP2_CSR) 693
22.6.3 COMP register map 696

23 Operational amplifiers (OPAMP) 697
23.1 Introduction 697
23.2 OPAMP main features 697
23.3 OPAMP functional description 697
23.3.1 OPAMP reset and clocks 697
23.3.2 Initial configuration 698
23.3.3 Signal routing 698
23.3.4 OPAMP modes 699
23.3.5 Calibration 702
23.4 OPAMP low-power modes 704
23.5 OPAMP registers 705

23.5.1 OPAMP1 control/status register (OPAMP1_CSR) 705
23.5.2 OPAMP1 offset trimming register in normal mode (OPAMP1_OTR) . . 706
23.5.3 OPAMP1 offset trimming register in low-power mode (OPAMP1_LPOTR) 706
23.5.4 OPAMP2 control/status register (OPAMP2_CSR) 707
23.5.5 OPAMP2 offset trimming register in normal mode (OPAMP2_OTR) . . 708
23.5.6 OPAMP2 offset trimming register in low-power mode (OPAMP2_LPOTR) 708
23.5.7 OPAMP register map 709

24 Digital filter for sigma delta modulators (DFSDM) 710

24.1 Introduction 710
24.2 DFSDM main features 711
24.3 DFSDM implementation 712
24.4 DFSDM functional description 713
24.4.1 DFSDM block diagram 713
24.4.2 DFSDM pins and internal signals 714
24.4.3 DFSDM reset and clocks 715
24.4.4 Serial channel transceivers 716
24.4.5 Configuring the input serial interface 726
24.4.6 Parallel data inputs 726
24.4.7 Channel selection 728
24.4.8 Digital filter configuration 729
24.4.9 Integrator unit 730
24.4.10 Analog watchdog 731
24.4.11 Short-circuit detector 733
24.4.12 Extreme detector 734
24.4.13 Data unit block 734
24.4.14 Signed data format 735
24.4.15 Launching conversions 736
24.4.16 Continuous and fast continuous modes 737
24.4.17 Request precedence 737
24.4.18 Power optimization in run mode 738
24.5 DFSDM interrupts 738
24.6 DFSDM DMA transfer 740
24.7 DFSDM channel y registers (y=0..7) 740
24.7.1 DFSDM channel y configuration register (DFSDM_CHyCFGR1) 740

24.7.2 DFSDM channel y configuration register (DFSDM_CHyCFGR2) 743
24.7.3 DFSDM channel y analog watchdog and short-circuit detector register (DFSDM_CHyAWSCDR) 743
24.7.4 DFSDM channel y watchdog filter data register (DFSDM_CHyWDATR) 744
24.7.5 DFSDM channel y data input register (DFSDM_CHyDATINR) 745
24.8 DFSDM filter x module registers (x=0..3) 746
24.8.1 DFSDM filter x control register 1 (DFSDM_FLTxCR1) 747
24.8.2 DFSDM filter x control register 2 (DFSDM_FLTxCR2) 749
24.8.3 DFSDM filter x interrupt and status register (DFSDM_FLTxISR) 751
24.8.4 DFSDM filter x interrupt flag clear register (DFSDM_FLTxICR) 752
24.8.5 DFSDM filter x injected channel group selection register (DFSDM_FLTxJCHGR) 753
24.8.6 DFSDM filter x control register (DFSDM_FLTxFCR) 754
24.8.7 DFSDM filter x data register for injected group (DFSDM_FLTxJDATAR) 755
24.8.8 DFSDM filter x data register for the regular channel (DFSDM_FLTxRDATAR) 755
24.8.9 DFSDM filter x analog watchdog high threshold register (DFSDM_FLTxAWHTR) 756
24.8.10 DFSDM filter x analog watchdog low threshold register (DFSDM_FLTxAWLTR) 757
24.8.11 DFSDM filter x analog watchdog status register (DFSDM_FLTxAWSR) 757
24.8.12 DFSDM filter x analog watchdog clear flag register (DFSDM_FLTxAWCFR) 758
24.8.13 DFSDM filter x extremes detector maximum register (DFSDM_FLTxEXMAX) 758
24.8.14 DFSDM filter x extremes detector minimum register (DFSDM_FLTxEXMIN) 759
24.8.15 DFSDM filter x conversion timer register (DFSDM_FLTxCNVTIMR) . . 759
24.8.16 DFSDM register map 760

25 Liquid crystal display controller (LCD) 770
25.1 Introduction 770
25.2 LCD main features 771
25.3 LCD functional description 772
25.3.1 General description 772
25.3.2 Frequency generator 773
25.3.3 Common driver 774

25.3.4 Segment driver 777
25.3.5 Voltage generator and contrast control 781
25.3.6 Double buffer memory 785
25.3.7 COM and SEG multiplexing 785
25.3.8 Flowchart 790
25.4 LCD low-power modes 791
25.5 LCD interrupts 791
25.6 LCD registers 793
25.6.1 LCD control register (LCD_CR) 793
25.6.2 LCD frame control register (LCD_FCR) 794
25.6.3 LCD status register (LCD_SR) 797
25.6.4 LCD clear register (LCD_CLR) 798
25.6.5 LCD display memory (LCD_RAM) 798
25.6.6 LCD register map 800

26 Touch sensing controller (TSC) 802
26.1 Introduction 802
26.2 TSC main features 802
26.3 TSC functional description 803
26.3.1 TSC block diagram 803
26.3.2 Surface charge transfer acquisition overview 803
26.3.3 Reset and clocks 805
26.3.4 Charge transfer acquisition sequence 806
26.3.5 Spread spectrum feature 807
26.3.6 Max count error 807
26.3.7 Sampling capacitor I/O and channel I/O mode selection 808
26.3.8 Acquisition mode 809
26.3.9 I/O hysteresis and analog switch control 809
26.4 TSC low-power modes 810
26.5 TSC interrupts 810
26.6 TSC registers 811
26.6.1 TSC control register (TSC_CR) 811
26.6.2 TSC interrupt enable register (TSC_IER) 813
26.6.3 TSC interrupt clear register (TSC_ICR) 814
26.6.4 TSC interrupt status register (TSC_ISR) 815
26.6.5 TSC I/O hysteresis control register (TSC_IOHCR) 815

26.6.6 TSC I/O analog switch control register (TSC_IOASCR) 816
26.6.7 TSC I/O sampling control register (TSC_IOSCR) 816
26.6.8 TSC I/O channel control register (TSC_IOCCR) 817
26.6.9 TSC I/O group control status register (TSC_IOGCSR) 817
26.6.10 TSC I/O group x counter register (TSC_IOGxCR) 818
26.6.11 TSC register map 819

27 True random number generator (RNG) 821
27.1 Introduction 821
27.2 RNG main features 821
27.3 RNG functional description 822
27.3.1 RNG block diagram 822
27.3.2 RNG internal signals 822
27.3.3 Random number generation 823
27.3.4 RNG initialization 825
27.3.5 RNG operation 825
27.3.6 RNG clocking 826
27.3.7 Error management 826
27.3.8 RNG low-power usage 827
27.4 RNG interrupts 827
27.5 RNG processing time 827
27.6 RNG entropy source validation 828
27.6.1 Introduction 828
27.6.2 Validation conditions 828
27.7 RNG registers 829
27.7.1 RNG control register (RNG_CR) 829
27.7.2 RNG status register (RNG_SR) 830
27.7.3 RNG data register (RNG_DR) 831
27.7.4 RNG register map 832

28 AES hardware accelerator (AES) 833
28.1 Introduction 833
28.2 AES main features 833
28.3 AES implementation 834
28.4 AES functional description 834
28.4.1 AES block diagram 834

28.4.2 AES internal signals 834
28.4.3 AES cryptographic core 835
28.4.4 AES procedure to perform a cipher operation 840
28.4.5 AES decryption key preparation 844
28.4.6 AES ciphertext stealing and data padding 845
28.4.7 AES task suspend and resume 846
28.4.8 AES basic chaining modes (ECB, CBC) 847
28.4.9 AES counter (CTR) mode 852
28.4.10 AES Galois/counter mode (GCM) 854
28.4.11 AES Galois message authentication code (GMAC) 859
28.4.12 AES counter with CBC-MAC (CCM) 861
28.4.13 .AES data registers and data swapping 866
28.4.14 AES key registers 868
28.4.15 AES initialization vector registers 868
28.4.16 AES DMA interface 868
28.4.17 AES error management 871
28.5 AES interrupts 871
28.6 AES processing latency 872
28.7 AES registers 873
28.7.1 AES control register (AES_CR) 873
28.7.2 AES status register (AES_SR) 876
28.7.3 AES data input register (AES_DINR) 877
28.7.4 AES data output register (AES_DOUTR) 878
28.7.5 AES key register 0 (AES_KEYR0) 878
28.7.6 AES key register 1 (AES_KEYR1) 879
28.7.7 AES key register 2 (AES_KEYR2) 879
28.7.8 AES key register 3 (AES_KEYR3) 880
28.7.9 AES initialization vector register 0 (AES_IVR0) 880
28.7.10 AES initialization vector register 1 (AES_IVR1) 880
28.7.11 AES initialization vector register 2 (AES_IVR2) 881
28.7.12 AES initialization vector register 3 (AES_IVR3) 881
28.7.13 AES key register 4 (AES_KEYR4) 882
28.7.14 AES key register 5 (AES_KEYR5) 882
28.7.15 AES key register 6 (AES_KEYR6) 882
28.7.16 AES key register 7 (AES_KEYR7) 883
28.7.17 AES suspend registers (AES_SUSPxR) 883
28.7.18 AES register map 884

29 Hash processor (HASH) 886
29.1 Introduction 886
29.2 HASH main features 886
29.3 HASH implementation 887
29.4 HASH functional description 887
29.4.1 HASH block diagram 887
29.4.2 HASH internal signals 888
29.4.3 About secure hash algorithms 888
29.4.4 Message data feeding 888
29.4.5 Message digest computing 890
29.4.6 Message padding 891
29.4.7 HMAC operation 893
29.4.8 HASH suspend/resume operations 895
29.4.9 HASH DMA interface 897
29.4.10 HASH error management 897
29.5 HASH interrupts 897
29.6 HASH processing time 898
29.7 HASH registers 899
29.7.1 HASH control register (HASH_CR) 899
29.7.2 HASH data input register (HASH_DIN) 902
29.7.3 HASH start register (HASH_STR) 903
29.7.4 HASH digest registers 904
29.7.5 HASH interrupt enable register (HASH_IMR) 905
29.7.6 HASH status register (HASH_SR) 906
29.7.7 HASH context swap registers 906
29.7.8 HASH register map 908

30 Advanced-control timers (TIM1/TIM8) 909
30.1 TIM1/TIM8 introduction 909
30.2 TIM1/TIM8 main features 909
30.3 TIM1/TIM8 functional description 911
30.3.1 Time-base unit 911
30.3.2 Counter modes 913
30.3.3 Repetition counter 924
30.3.4 External trigger input 926
30.3.5 Clock selection 928

30.3.6 Capture/compare channels 932
30.3.7 Input capture mode 935
30.3.8 PWM input mode 936
30.3.9 Forced output mode 936
30.3.10 Output compare mode 937
30.3.11 PWM mode 938
30.3.12 Asymmetric PWM mode 941
30.3.13 Combined PWM mode 942
30.3.14 Combined 3-phase PWM mode 943
30.3.15 Complementary outputs and dead-time insertion 944
30.3.16 Using the break function 946
30.3.17 Bidirectional break inputs 952
30.3.18 Clearing the OCxREF signal on an external event 953
30.3.19 6-step PWM generation 954
30.3.20 One-pulse mode 955
30.3.21 Retriggerable one pulse mode (OPM) 956
30.3.22 Encoder interface mode 957
30.3.23 UIF bit remapping 959
30.3.24 Timer input XOR function 960
30.3.25 Interfacing with Hall sensors 960
30.3.26 Timer synchronization 963
30.3.27 ADC synchronization 967
30.3.28 DMA burst mode 967
30.3.29 Debug mode 968
30.4 TIM1/TIM8 registers 969
30.4.1 TIMx control register 1 (TIMx_CR1)(x = 1, 8) 969
30.4.2 TIMx control register 2 (TIMx_CR2)(x = 1, 8) 970
30.4.3 TIMx slave mode control register (TIMx_SMCR)(x = 1, 8) 973
30.4.4 TIMx DMA/interrupt enable register (TIMx_DIER)(x = 1, 8) 975
30.4.5 TIMx status register (TIMx_SR)(x = 1, 8) 977
30.4.6 TIMx event generation register (TIMx_EGR)(x = 1, 8) 979
30.4.7 TIMx capture/compare mode register 1 [alternate] (TIMx_CCMR1)(x = 1, 8) 980
30.4.8 TIMx capture/compare mode register 1 [alternate] (TIMx_CCMR1)(x = 1, 8) 981
30.4.9 TIMx capture/compare mode register 2 [alternate] (TIMx_CCMR2)(x = 1, 8) 984

30.4.10 TIMx capture/compare mode register 2 [alternate] (TIMx_CCMR2)(x = 1, 8) 985
30.4.11 TIMx capture/compare enable register (TIMx_CCER)(x = 1, 8) 987
30.4.12 TIMx counter (TIMx_CNT)(x = 1, 8) 990
30.4.13 TIMx prescaler (TIMx_PSC)(x = 1, 8) 990
30.4.14 TIMx auto-reload register (TIMx_ARR)(x = 1, 8) 990
30.4.15 TIMx repetition counter register (TIMx_RCR)(x = 1, 8) 991
30.4.16 TIMx capture/compare register 1 (TIMx_CCR1)(x = 1, 8) 991
30.4.17 TIMx capture/compare register 2 (TIMx_CCR2)(x = 1, 8) 992
30.4.18 TIMx capture/compare register 3 (TIMx_CCR3)(x = 1, 8) 992
30.4.19 TIMx capture/compare register 4 (TIMx_CCR4)(x = 1, 8) 993
30.4.20 TIMx break and dead-time register (TIMx_BDTR)(x = 1, 8) 993
30.4.21 TIMx DMA control register (TIMx_DCR)(x = 1, 8) 996
30.4.22 TIMx DMA address for full transfer (TIMx_DMAR)(x = 1, 8) 997
30.4.23 TIM1 option register 1 (TIM1_OR1) 998
30.4.24 TIM8 option register 1 (TIM8_OR1) 999
30.4.25 TIMx capture/compare mode register 3 (TIMx_CCMR3)(x = 1, 8) 999
30.4.26 TIMx capture/compare register 5 (TIMx_CCR5)(x = 1, 8) 1000
30.4.27 TIMx capture/compare register 6 (TIMx_CCR6)(x = 1, 8) 1001
30.4.28 TIM1 option register 2 (TIM1_OR2) 1002
30.4.29 TIM1 option register 3 (TIM1_OR3) 1003
30.4.30 TIM8 option register 2 (TIM8_OR2) 1005
30.4.31 TIM8 option register 3 (TIM8_OR3) 1007
30.4.32 TIM1 register map 1009
30.4.33 TIM8 register map 1011

31 General-purpose timers (TIM2/TIM3/TIM4/TIM5) 1014

31.1 TIM2/TIM3/TIM4/TIM5 introduction 1014
31.2 TIM2/TIM3/TIM4/TIM5 main features 1014
31.3 TIM2/TIM3/TIM4/TIM5 functional description 1016
31.3.1 Time-base unit 1016
31.3.2 Counter modes 1018
31.3.3 Clock selection 1028
31.3.4 Capture/Compare channels 1032

31.3.5 Input capture mode 1034
31.3.6 PWM input mode 1035
31.3.7 Forced output mode 1036
31.3.8 Output compare mode 1037
31.3.9 PWM mode 1038
31.3.10 Asymmetric PWM mode 1041
31.3.11 Combined PWM mode 1042
31.3.12 Clearing the OCxREF signal on an external event 1043
31.3.13 One-pulse mode 1045
31.3.14 Retriggerable one pulse mode (OPM) 1046
31.3.15 Encoder interface mode 1047
31.3.16 UIF bit remapping 1049
31.3.17 Timer input XOR function 1049
31.3.18 Timers and external trigger synchronization 1050
31.3.19 Timer synchronization 1053
31.3.20 DMA burst mode 1057
31.3.21 Debug mode 1058
31.4 TIM2/TIM3/TIM4/TIM5 registers 1059
31.4.1 TIMx control register 1 (TIMx_CR1)(x = 2 to 5) 1059
31.4.2 TIMx control register 2 (TIMx_CR2)(x = 2 to 5) 1060
31.4.3 TIMx slave mode control register (TIMx_SMCR)(x = 2 to 5) 1062
31.4.4 TIMx DMA/Interrupt enable register (TIMx_DIER)(x = 2 to 5) 1065
31.4.5 TIMx status register (TIMx_SR)(x = 2 to 5) 1066
31.4.6 TIMx event generation register (TIMx_EGR)(x = 2 to 5) 1067
31.4.7 TIMx capture/compare mode register 1 [alternate] (TIMx_CCMR1) (x = 2 to 5) 1068
31.4.8 TIMx capture/compare mode register 1 [alternate] (TIMx_CCMR1) (x = 2 to 5) 1070
31.4.9 TIMx capture/compare mode register 2 [alternate] (TIMx_CCMR2) (x = 2 to 5) 1072
31.4.10 TIMx capture/compare mode register 2 [alternate] (TIMx_CCMR2) (x = 2 to 5) 1073
31.4.11 TIMx capture/compare enable register (TIMx_CCER)(x = 2 to 5) 1074
31.4.12 TIMx counter [alternate] (TIMx_CNT)(x = 2 to 5) 1075
31.4.13 TIMx counter [alternate] (TIMx_CNT)(x = 2 to 5) 1076
31.4.14 TIMx prescaler (TIMx_PSC)(x = 2 to 5) 1076
31.4.15 TIMx auto-reload register (TIMx_ARR)(x = 2 to 5) 1077

31.4.16 TIMx capture/compare register 1 (TIMx_CCR1)(x = 2 to 5) 1077
31.4.17 TIMx capture/compare register 2 (TIMx_CCR2)(x = 2 to 5) 1078
31.4.18 TIMx capture/compare register 3 (TIMx_CCR3)(x = 2 to 5) 1078
31.4.19 TIMx capture/compare register 4 (TIMx_CCR4)(x = 2 to 5) 1079
31.4.20 TIMx DMA control register (TIMx_DCR)(x = 2 to 5) 1080
31.4.21 TIMx DMA address for full transfer (TIMx_DMAR)(x = 2 to 5) 1080
31.4.22 TIM2 option register 1 (TIM2_OR1) 1080
31.4.23 TIM3 option register 1 (TIM3_OR1) 1081
31.4.24 TIM2 option register 2 (TIM2_OR2) 1081
31.4.25 TIM3 option register 2 (TIM3_OR2) 1082
31.4.26 TIMx register map 1083

32 General-purpose timers (TIM15/TIM16/TIM17) 1086

32.1 TIM15/TIM16/TIM17 introduction 1086
32.2 TIM15 main features 1086
32.3 TIM16/TIM17 main features 1087
32.4 Implementation 1089
32.5 TIM15/TIM16/TIM17 functional description 1090
32.5.1 Time-base unit 1090
32.5.2 Counter modes 1092
32.5.3 Repetition counter 1096
32.5.4 Clock selection 1097
32.5.5 Capture/compare channels 1099
32.5.6 Input capture mode 1101
32.5.7 PWM input mode (only for TIM15) 1102
32.5.8 Forced output mode 1103
32.5.9 Output compare mode 1104
32.5.10 PWM mode 1105
32.5.11 Combined PWM mode (TIM15 only) 1106
32.5.12 Complementary outputs and dead-time insertion 1107
32.5.13 Using the break function 1109
32.5.14 One-pulse mode 1114
32.5.15 Retriggerable one pulse mode (OPM) (TIM15 only) 1116
32.5.16 UIF bit remapping 1116
32.5.17 Timer input XOR function (TIM15 only) 1118
32.5.18 External trigger synchronization (TIM15 only) 1119
32.5.19 Slave mode – combined reset + trigger mode 1121

32.5.20 DMA burst mode 1121
32.5.21 Timer synchronization (TIM15) 1123
32.5.22 Debug mode 1123
32.6 TIM15 registers 1124
32.6.1 TIM15 control register 1 (TIM15_CR1) 1124
32.6.2 TIM15 control register 2 (TIM15_CR2) 1125
32.6.3 TIM15 slave mode control register (TIM15_SMCR) 1127
32.6.4 TIM15 DMA/interrupt enable register (TIM15_DIER) 1128
32.6.5 TIM15 status register (TIM15_SR) 1129
32.6.6 TIM15 event generation register (TIM15_EGR) 1131
32.6.7 TIM15 capture/compare mode register 1 [alternate] (TIM15_CCMR1) 1132
32.6.8 TIM15 capture/compare mode register 1 [alternate] (TIM15_CCMR1) 1133
32.6.9 TIM15 capture/compare enable register (TIM15_CCER) 1136
32.6.10 TIM15 counter (TIM15_CNT) 1139
32.6.11 TIM15 prescaler (TIM15_PSC) 1139
32.6.12 TIM15 auto-reload register (TIM15_ARR) 1139
32.6.13 TIM15 repetition counter register (TIM15_RCR) 1140
32.6.14 TIM15 capture/compare register 1 (TIM15_CCR1) 1140
32.6.15 TIM15 capture/compare register 2 (TIM15_CCR2) 1141
32.6.16 TIM15 break and dead-time register (TIM15_BDTR) 1141
32.6.17 TIM15 DMA control register (TIM15_DCR) 1143
32.6.18 TIM15 DMA address for full transfer (TIM15_DMAR) 1144
32.6.19 TIM15 option register 1 (TIM15_OR1) 1144
32.6.20 TIM15 option register 2 (TIM15_OR2) 1145
32.6.21 TIM15 register map 1146
32.7 TIM16/TIM17 registers 1149
32.7.1 TIMx control register 1 (TIMx_CR1)(x = 16 to 17) 1149
32.7.2 TIMx control register 2 (TIMx_CR2)(x = 16 to 17) 1150
32.7.3 TIMx DMA/interrupt enable register (TIMx_DIER)(x = 16 to 17) 1151
32.7.4 TIMx status register (TIMx_SR)(x = 16 to 17) 1152
32.7.5 TIMx event generation register (TIMx_EGR)(x = 16 to 17) 1153
32.7.6 TIMx capture/compare mode register 1 [alternate] (TIMx_CCMR1) (x = 16 to 17) 1154
32.7.7 TIMx capture/compare mode register 1 [alternate] (TIMx_CCMR1) (x = 16 to 17) 1155
32.7.8 TIMx capture/compare enable register (TIMx_CCER)(x = 16 to 17) . 1157

32.7.9 TIMx counter (TIMx_CNT)(x = 16 to 17) 1159
32.7.10 TIMx prescaler (TIMx_PSC)(x = 16 to 17) 1160
32.7.11 TIMx auto-reload register (TIMx_ARR)(x = 16 to 17) 1160
32.7.12 TIMx repetition counter register (TIMx_RCR)(x = 16 to 17) 1161
32.7.13 TIMx capture/compare register 1 (TIMx_CCR1)(x = 16 to 17) 1161
32.7.14 TIMx break and dead-time register (TIMx_BDTR)(x = 16 to 17) 1162
32.7.15 TIMx DMA control register (TIMx_DCR)(x = 16 to 17) 1164
32.7.16 TIMx DMA address for full transfer (TIMx_DMAR)(x = 16 to 17) 1164
32.7.17 TIM16 option register 1 (TIM16_OR1) 1165
32.7.18 TIM16 option register 2 (TIM16_OR2) 1165
32.7.19 TIM17 option register 1 (TIM17_OR1) 1167
32.7.20 TIM17 option register 2 (TIM17_OR2) 1167
32.7.21 TIM16/TIM17 register map 1170

33 Basic timers (TIM6/TIM7) 1172

33.1 TIM6/TIM7 introduction 1172
33.2 TIM6/TIM7 main features 1172
33.3 TIM6/TIM7 functional description 1173
33.3.1 Time-base unit 1173
33.3.2 Counting mode 1175
33.3.3 UIF bit remapping 1178
33.3.4 Clock source 1178
33.3.5 Debug mode 1179
33.4 TIM6/TIM7 registers 1179
33.4.1 TIMx control register 1 (TIMx_CR1)(x = 6 to 7) 1179
33.4.2 TIMx control register 2 (TIMx_CR2)(x = 6 to 7) 1181
33.4.3 TIMx DMA/Interrupt enable register (TIMx_DIER)(x = 6 to 7) 1181
33.4.4 TIMx status register (TIMx_SR)(x = 6 to 7) 1182
33.4.5 TIMx event generation register (TIMx_EGR)(x = 6 to 7) 1182
33.4.6 TIMx counter (TIMx_CNT)(x = 6 to 7) 1182
33.4.7 TIMx prescaler (TIMx_PSC)(x = 6 to 7) 1183
33.4.8 TIMx auto-reload register (TIMx_ARR)(x = 6 to 7) 1183
33.4.9 TIMx register map 1184

34 Low-power timer (LPTIM) 1185

34.1 Introduction 1185
34.2 LPTIM main features 1185

34.3 LPTIM implementation 1186
34.4 LPTIM functional description 1186
34.4.1 LPTIM block diagram 1186
34.4.2 LPTIM trigger mapping 1187
34.4.3 LPTIM reset and clocks 1187
34.4.4 Glitch filter 1188
34.4.5 Prescaler 1189
34.4.6 Trigger multiplexer 1189
34.4.7 Operating mode 1190
34.4.8 Timeout function 1192
34.4.9 Waveform generation 1192
34.4.10 Register update 1193
34.4.11 Counter mode 1194
34.4.12 Timer enable 1194
34.4.13 Encoder mode 1195
34.4.14 Debug mode 1196
34.5 LPTIM low-power modes 1196
34.6 LPTIM interrupts 1197
34.7 LPTIM registers 1197
34.7.1 LPTIM interrupt and status register (LPTIM_ISR) 1198
34.7.2 LPTIM interrupt clear register (LPTIM_ICR) 1199
34.7.3 LPTIM interrupt enable register (LPTIM_IER) 1199
34.7.4 LPTIM configuration register (LPTIM_CFGR) 1200
34.7.5 LPTIM control register (LPTIM_CR) 1203
34.7.6 LPTIM compare register (LPTIM_CMP) 1204
34.7.7 LPTIM autoreload register (LPTIM_ARR) 1205
34.7.8 LPTIM counter register (LPTIM_CNT) 1205
34.7.9 LPTIM1 option register (LPTIM1_OR) 1206
34.7.10 LPTIM2 option register (LPTIM2_OR) 1206
34.7.11 LPTIM register map 1207

35 Infrared interface (IRTIM) 1208

36 Independent watchdog (IWDG) 1209
36.1 Introduction 1209
36.2 IWDG main features 1209

36.3 IWDG functional description 1209
36.3.1 IWDG block diagram 1209
36.3.2 Window option 1210
36.3.3 Hardware watchdog 1211
36.3.4 Low-power freeze 1211
36.3.5 Register access protection 1211
36.3.6 Debug mode 1211
36.4 IWDG registers 1212
36.4.1 IWDG key register (IWDG_KR) 1212
36.4.2 IWDG prescaler register (IWDG_PR) 1213
36.4.3 IWDG reload register (IWDG_RLR) 1214
36.4.4 IWDG status register (IWDG_SR) 1215
36.4.5 IWDG window register (IWDG_WINR) 1216
36.4.6 IWDG register map 1217

37 System window watchdog (WWDG) 1218
37.1 Introduction 1218
37.2 WWDG main features 1218
37.3 WWDG functional description 1218
37.3.1 WWDG block diagram 1219
37.3.2 Enabling the watchdog 1219
37.3.3 Controlling the down-counter 1219
37.3.4 How to program the watchdog timeout 1219
37.3.5 Debug mode 1220
37.4 WWDG interrupts 1221
37.5 WWDG registers 1221
37.5.1 WWDG control register (WWDG_CR) 1221
37.5.2 WWDG configuration register (WWDG_CFR) 1222
37.5.3 WWDG status register (WWDG_SR) 1222
37.5.4 WWDG register map 1222

38 Real-time clock (RTC) 1224
38.1 Introduction 1224
38.2 RTC main features 1225
38.3 RTC functional description 1226
38.3.1 RTC block diagram 1226

38.3.2 GPIOs controlled by the RTC 1227
38.3.3 Clock and prescalers 1229
38.3.4 Real-time clock and calendar 1230
38.3.5 Programmable alarms 1230
38.3.6 Periodic auto-wakeup 1230
38.3.7 RTC initialization and configuration 1231
38.3.8 Reading the calendar 1233
38.3.9 Resetting the RTC 1234
38.3.10 RTC synchronization 1234
38.3.11 RTC reference clock detection 1235
38.3.12 RTC smooth digital calibration 1235
38.3.13 Time-stamp function 1237
38.3.14 Tamper detection 1238
38.3.15 Calibration clock output 1240
38.3.16 Alarm output 1241
38.4 RTC low-power modes 1241
38.5 RTC interrupts 1242
38.6 RTC registers 1243
38.6.1 RTC time register (RTC_TR) 1243
38.6.2 RTC date register (RTC_DR) 1244
38.6.3 RTC control register (RTC_CR) 1245
38.6.4 RTC initialization and status register (RTC_ISR) 1248
38.6.5 RTC prescaler register (RTC_PRER) 1251
38.6.6 RTC wakeup timer register (RTC_WUTR) 1252
38.6.7 RTC alarm A register (RTC_ALRMAR) 1253
38.6.8 RTC alarm B register (RTC_ALRMBR) 1254
38.6.9 RTC write protection register (RTC_WPR) 1255
38.6.10 RTC sub second register (RTC_SSR) 1255
38.6.11 RTC shift control register (RTC_SHIFTR) 1256
38.6.12 RTC timestamp time register (RTC_TSTR) 1257
38.6.13 RTC timestamp date register (RTC_TSDR) 1258
38.6.14 RTC time-stamp sub second register (RTC_TSSSR) 1259
38.6.15 RTC calibration register (RTC_CALR) 1260
38.6.16 RTC tamper configuration register (RTC_TAMPCR) 1261
38.6.17 RTC alarm A sub second register (RTC_ALRMASSR) 1264
38.6.18 RTC alarm B sub second register (RTC_ALRMBSSR) 1265
38.6.19 RTC option register (RTC_OR) 1266

38.6.20 RTC backup registers (RTC_BKPxR) 1266
38.6.21 RTC register map 1267

39 Inter-integrated circuit (I2C) interface 1269
39.1 Introduction 1269
39.2 I2C main features 1269
39.3 I2C implementation 1270
39.4 I2C functional description 1271
39.4.1 I2C block diagram 1272
39.4.2 I2C pins and internal signals 1273
39.4.3 I2C clock requirements 1273
39.4.4 Mode selection 1273
39.4.5 I2C initialization 1274
39.4.6 Software reset 1279
39.4.7 Data transfer 1280
39.4.8 I2C slave mode 1282
39.4.9 I2C master mode 1291
39.4.10 I2C_TIMINGR register configuration examples 1303
39.4.11 SMBus specific features 1304
39.4.12 SMBus initialization 1307
39.4.13 SMBus: I2C_TIMEOUTR register configuration examples 1309
39.4.14 SMBus slave mode 1310
39.4.15 Wakeup from Stop mode on address match 1318
39.4.16 Error conditions 1318
39.4.17 DMA requests 1320
39.4.18 Debug mode 1321
39.5 I2C low-power modes 1321
39.6 I2C interrupts 1322
39.7 I2C registers 1323
39.7.1 I2C control register 1 (I2C_CR1) 1323
39.7.2 I2C control register 2 (I2C_CR2) 1326
39.7.3 I2C own address 1 register (I2C_OAR1) 1329
39.7.4 I2C own address 2 register (I2C_OAR2) 1330
39.7.5 I2C timing register (I2C_TIMINGR) 1331
39.7.6 I2C timeout register (I2C_TIMEOUTR) 1332
39.7.7 I2C interrupt and status register (I2C_ISR) 1333

39.7.8 I2C interrupt clear register (I2C_ICR) 1335
39.7.9 I2C PEC register (I2C_PECR) 1336
39.7.10 I2C receive data register (I2C_RXDR) 1337
39.7.11 I2C transmit data register (I2C_TXDR) 1337
39.7.12 I2C register map 1338

40 Universal synchronous/asynchronous receiver transmitter (USART/UART) 1340

40.1 Introduction 1340
40.2 USART main features 1340
40.3 USART extended features 1341
40.4 USART implementation 1342
40.5 USART functional description 1342
40.5.1 USART character description 1345
40.5.2 USART transmitter 1347
40.5.3 USART receiver 1349
40.5.4 USART baud rate generation 1356
40.5.5 Tolerance of the USART receiver to clock deviation 1358
40.5.6 USART auto baud rate detection 1359
40.5.7 Multiprocessor communication using USART 1360
40.5.8 Modbus communication using USART 1362
40.5.9 USART parity control 1363
40.5.10 USART LIN (local interconnection network) mode 1364
40.5.11 USART synchronous mode 1366
40.5.12 USART Single-wire Half-duplex communication 1369
40.5.13 USART Smartcard mode 1369
40.5.14 USART IrDA SIR ENDEC block 1374
40.5.15 USART continuous communication in DMA mode 1376
40.5.16 RS232 hardware flow control and RS485 driver enable using USART 1378
40.5.17 Wakeup from Stop mode using USART 1380
40.6 USART low-power modes 1382
40.7 USART interrupts 1382
40.8 USART registers 1384
40.8.1 USART control register 1 (USART_CR1) 1384
40.8.2 USART control register 2 (USART_CR2) 1387
40.8.3 USART control register 3 (USART_CR3) 1391

40.8.4 USART baud rate register (USART_BRR) 1395
40.8.5 USART guard time and prescaler register (USART_GTPR) 1395
40.8.6 USART receiver timeout register (USART_RTOR) 1397
40.8.7 USART request register (USART_RQR) 1398
40.8.8 USART interrupt and status register (USART_ISR) 1399
40.8.9 USART interrupt flag clear register (USART_ICR) 1403
40.8.10 USART receive data register (USART_RDR) 1405
40.8.11 USART transmit data register (USART_TDR) 1405
40.8.12 USART register map 1406

41 Low-power universal asynchronous receiver transmitter (LPUART) 1408

41.1 Introduction 1408
41.2 LPUART main features 1409
41.3 LPUART implementation 1409
41.4 LPUART functional description 1410
41.4.1 LPUART character description 1412
41.4.2 LPUART transmitter 1414
41.4.3 LPUART receiver 1416
41.4.4 LPUART baud rate generation 1419
41.4.5 Tolerance of the LPUART receiver to clock deviation 1421
41.4.6 Multiprocessor communication using LPUART 1422
41.4.7 LPUART parity control 1424
41.4.8 Single-wire Half-duplex communication using LPUART 1425
41.4.9 Continuous communication in DMA mode using LPUART 1425
41.4.10 RS232 Hardware flow control and RS485 Driver Enable using LPUART 1428
41.4.11 Wakeup from Stop mode using LPUART 1431
41.5 LPUART low-power mode 1432
41.6 LPUART interrupts 1433
41.7 LPUART registers 1435
41.7.1 Control register 1 (LPUART_CR1) 1435
41.7.2 Control register 2 (LPUART_CR2) 1438
41.7.3 Control register 3 (LPUART_CR3) 1440
41.7.4 Baud rate register (LPUART_BRR) 1442
41.7.5 Request register (LPUART_RQR) 1442
41.7.6 Interrupt & status register (LPUART_ISR) 1443

41.7.7 Interrupt flag clear register (LPUART_ICR) 1446
41.7.8 Receive data register (LPUART_RDR) 1447
41.7.9 Transmit data register (LPUART_TDR) 1447
41.7.10 LPUART register map 1449

42 Serial peripheral interface (SPI) 1450
42.1 Introduction 1450
42.2 SPI main features 1450
42.3 SPI implementation 1450
42.4 SPI functional description 1451
42.4.1 General description 1451
42.4.2 Communications between one master and one slave 1452
42.4.3 Standard multi-slave communication 1455
42.4.4 Multi-master communication 1455
42.4.5 Slave select (NSS) pin management 1456
42.4.6 Communication formats 1457
42.4.7 Configuration of SPI 1459
42.4.8 Procedure for enabling SPI 1460
42.4.9 Data transmission and reception procedures 1460
42.4.10 SPI status flags 1470
42.4.11 SPI error flags 1471
42.4.12 NSS pulse mode 1472
42.4.13 TI mode 1472
42.4.14 CRC calculation 1473
42.5 SPI interrupts 1475
42.6 SPI registers 1476
42.6.1 SPI control register 1 (SPIx_CR1) 1476
42.6.2 SPI control register 2 (SPIx_CR2) 1478
42.6.3 SPI status register (SPIx_SR) 1480
42.6.4 SPI data register (SPIx_DR) 1481
42.6.5 SPI CRC polynomial register (SPIx_CRCPR) 1482
42.6.6 SPI Rx CRC register (SPIx_RXCRCR) 1482
42.6.7 SPI Tx CRC register (SPIx_TXCRCR) 1482
42.6.8 SPI register map 1484

43 Serial audio interface (SAI) 1485

43.1 Introduction 1485
43.2 SAI main features 1486
43.3 SAI functional description 1487
43.3.1 SAI block diagram 1487
43.3.2 SAI pins and internal signals 1488
43.3.3 Main SAI modes 1488
43.3.4 SAI synchronization mode 1489
43.3.5 Audio data size 1490
43.3.6 Frame synchronization 1491
43.3.7 Slot configuration 1494
43.3.8 SAI clock generator 1496
43.3.9 Internal FIFOs 1498
43.3.10 AC'97 link controller 1500
43.3.11 SPDIF output 1502
43.3.12 Specific features 1505
43.3.13 Error flags 1509
43.3.14 Disabling the SAI 1512
43.3.15 SAI DMA interface 1512
43.4 SAI interrupts 1513
43.5 SAI registers 1515
43.5.1 SAI global configuration register (SAI_GCR) 1515
43.5.2 SAI configuration register 1 (SAI_ACR1) 1515
43.5.3 SAI configuration register 1 (SAI_BCR1) 1518
43.5.4 SAI configuration register 2 (SAI_ACR2) 1521
43.5.5 SAI configuration register 2 (SAI_BCR2) 1523
43.5.6 SAI frame configuration register (SAI_AFRCR) 1525
43.5.7 SAI frame configuration register (SAI_BFRCR) 1526
43.5.8 SAI slot register (SAI_ASLOTR) 1527
43.5.9 SAI slot register (SAI_BSLOTR) 1528
43.5.10 SAI interrupt mask register (SAI_AIM) 1529
43.5.11 SAI interrupt mask register (SAI_BIM) 1531
43.5.12 SAI status register (SAI_ASR) 1532
43.5.13 SAI status register (SAI_BSR) 1534
43.5.14 SAI clear flag register (SAI_ACLRFR) 1536
43.5.15 SAI clear flag register (SAI_BCLRFR) 1537
43.5.16 SAI data register (SAI_ADR) 1538

43.5.17 SAI data register (SAI_BDR) 1539
43.5.18 SAI register map 1540

44 Single Wire Protocol Master Interface (SWPMI) 1541
44.1 Introduction 1541
44.2 SWPMI main features 1542
44.3 SWPMI functional description 1543
44.3.1 SWPMI block diagram 1543
44.3.2 SWP initialization and activation 1543
44.3.3 SWP bus states 1544
44.3.4 SWPMI_IO (internal transceiver) bypass 1545
44.3.5 SWPMI Bit rate 1545
44.3.6 SWPMI frame handling 1546
44.3.7 Transmission procedure 1546
44.3.8 Reception procedure 1551
44.3.9 Error management 1555
44.3.10 Loopback mode 1557
44.4 SWPMI low-power modes 1557
44.5 SWPMI interrupts 1558
44.6 SWPMI registers 1559
44.6.1 SWPMI Configuration/Control register (SWPMI_CR) 1559
44.6.2 SWPMI Bitrate register (SWPMI_BRR) 1560
44.6.3 SWPMI Interrupt and Status register (SWPMI_ISR) 1561
44.6.4 SWPMI Interrupt Flag Clear register (SWPMI_ICR) 1562
44.6.5 SWPMI Interrupt Enable register (SMPMI_IER) 1563
44.6.6 SWPMI Receive Frame Length register (SWPMI_RFL) 1564
44.6.7 SWPMI Transmit data register (SWPMI_TDR) 1565
44.6.8 SWPMI Receive data register (SWPMI_RDR) 1565
44.6.9 SWPMI Option register (SWPMI_OR) 1565
44.6.10 SWPMI register map and reset value table 1567

45 SD/SDIO/MMC card host interface (SDMMC) 1568
45.1 SDMMC main features 1568
45.2 SDMMC bus topology 1568
45.3 SDMMC functional description 1570
45.3.1 SDMMC adapter 1572

45.3.2 SDMMC APB2 interface 1583
45.4 Card functional description 1584
45.4.1 Card identification mode 1584
45.4.2 Card reset 1584
45.4.3 Operating voltage range validation 1585
45.4.4 Card identification process 1585
45.4.5 Block write 1586
45.4.6 Block read 1587
45.4.7 Stream access, stream write and stream read (MultiMediaCard only) 1587
45.4.8 Erase: group erase and sector erase 1589
45.4.9 Wide bus selection or deselection 1589
45.4.10 Protection management 1589
45.4.11 Card status register 1593
45.4.12 SD status register 1596
45.4.13 SD I/O mode 1600
45.4.14 Commands and responses 1601
45.5 Response formats 1604
45.5.1 R1 (normal response command) 1605
45.5.2 R1b 1605
45.5.3 R2 (CID, CSD register) 1605
45.5.4 R3 (OCR register) 1606
45.5.5 R4 (Fast I/O) 1606
45.5.6 R4b 1606
45.5.7 R5 (interrupt request) 1607
45.5.8 R6 1607
45.6 SDIO I/O card-specific operations 1608
45.6.1 SDIO I/O read wait operation by SDMMC_D2 signalling 1608
45.6.2 SDIO read wait operation by stopping SDMMC_CK 1609
45.6.3 SDIO suspend/resume operation 1609
45.6.4 SDIO interrupts 1609
45.7 HW flow control 1609
45.8 SDMMC registers 1610
45.8.1 SDMMC power control register (SDMMC_POWER) 1610
45.8.2 SDMMC clock control register (SDMMC_CLKCR) 1610
45.8.3 SDMMC argument register (SDMMC_ARG) 1612
45.8.4 SDMMC command register (SDMMC_CMD) 1612

45.8.5 SDMMC command response register (SDMMC_RESPCMD) 1613
45.8.6 SDMMC response 1..4 register (SDMMC_RESPx) 1613
45.8.7 SDMMC data timer register (SDMMC_DTIMER) 1614
45.8.8 SDMMC data length register (SDMMC_DLEN) 1615
45.8.9 SDMMC data control register (SDMMC_DCTRL) 1615
45.8.10 SDMMC data counter register (SDMMC_DCOUNT) 1618
45.8.11 SDMMC status register (SDMMC_STA) 1618
45.8.12 SDMMC interrupt clear register (SDMMC_ICR) 1619
45.8.13 SDMMC mask register (SDMMC_MASK) 1621
45.8.14 SDMMC FIFO counter register (SDMMC_FIFOCNT) 1623
45.8.15 SDMMC data FIFO register (SDMMC_FIFO) 1624
45.8.16 SDMMC register map 1625

46 Controller area network (bxCAN) 1627
46.1 Introduction 1627
46.2 bxCAN main features 1627
46.3 bxCAN general description 1628
46.3.1 CAN 2.0B active core 1628
46.3.2 Control, status and configuration registers 1629
46.3.3 Tx mailboxes 1629
46.3.4 Acceptance filters 1629
46.4 bxCAN operating modes 1631
46.4.1 Initialization mode 1631
46.4.2 Normal mode 1632
46.4.3 Sleep mode (low-power) 1632
46.5 Test mode 1633
46.5.1 Silent mode 1633
46.5.2 Loop back mode 1634
46.5.3 Loop back combined with silent mode 1634
46.6 Behavior in debug mode 1635
46.7 bxCAN functional description 1635
46.7.1 Transmission handling 1635
46.7.2 Time triggered communication mode 1637
46.7.3 Reception handling 1637
46.7.4 Identifier filtering 1639
46.7.5 Message storage 1643

46.7.6 Error management 1645
46.7.7 Bit timing 1645
46.8 bxCAN interrupts 1648
46.9 CAN registers 1649
46.9.1 Register access protection 1649
46.9.2 CAN control and status registers 1649
46.9.3 CAN mailbox registers 1659
46.9.4 CAN filter registers 1666
46.9.5 bxCAN register map 1670

47 USB on-the-go full-speed (OTG_FS) 1674
47.1 Introduction 1674
47.2 OTG_FS main features 1675
47.2.1 General features 1676
47.2.2 Host-mode features 1677
47.2.3 Peripheral-mode features 1677
47.3 OTG_FS implementation 1678
47.4 OTG_FS functional description 1679
47.4.1 OTG_FS block diagram 1679
47.4.2 OTG_FS pin and internal signals 1679
47.4.3 OTG_FS core 1680
47.4.4 Full-speed OTG PHY 1680
47.5 OTG_FS dual role device (DRD) 1681
47.5.1 ID line detection 1681
47.5.2 HNP dual role device 1682
47.5.3 SRP dual role device 1682
47.6 OTG_FS as a USB peripheral 1682
47.6.1 SRP-capable peripheral 1683
47.6.2 Peripheral states 1683
47.6.3 Peripheral endpoints 1684
47.7 OTG_FS as a USB host 1686
47.7.1 SRP-capable host 1687
47.7.2 USB host states 1687
47.7.3 Host channels 1689
47.7.4 Host scheduler 1690
47.8 OTG_FS SOF trigger 1691

47.8.1 Host SOFs 1691
47.8.2 Peripheral SOFs 1691
47.9 OTG_FS low-power modes 1692
47.10 OTG_FS Dynamic update of the OTG_HFIR register 1693
47.11 OTG_FS data FIFOs 1693
47.11.1 Peripheral FIFO architecture 1694
47.11.2 Host FIFO architecture 1695
47.11.3 FIFO RAM allocation 1696
47.12 OTG_FS system performance 1698
47.13 OTG_FS interrupts 1698
47.14 OTG_FS control and status registers 1700
47.14.1 CSR memory map 1700
47.15 OTG_FS registers 1705
47.15.1 OTG control and status register (OTG_GOTGCTL) 1705
47.15.2 OTG interrupt register (OTG_GOTGINT) 1708
47.15.3 OTG AHB configuration register (OTG_GAHBCFG) 1709
47.15.4 OTG USB configuration register (OTG_GUSBCFG) 1710
47.15.5 OTG reset register (OTG_GRSTCTL) 1712
47.15.6 OTG core interrupt register (OTG_GINTSTS) 1714
47.15.7 OTG interrupt mask register (OTG_GINTMSK) 1718
47.15.8 OTG receive status debug read register (OTG_GRXSTSR) 1721
47.15.9 OTG receive status debug read [alternate] (OTG_GRXSTSR) 1722
47.15.10 OTG status read and pop registers (OTG_GRXSTSP) 1723
47.15.11 OTG status read and pop registers [alternate] (OTG_GRXSTSP) . . 1724
47.15.12 OTG receive FIFO size register (OTG_GRXFSIZ) 1725
47.15.13 OTG host non-periodic transmit FIFO size register (OTG_HNPTXFSIZ)/Endpoint 0 Transmit FIFO size (OTG_DIEPTXF0) 1725
47.15.14 OTG non-periodic transmit FIFO/queue status register (OTG_HNPTXSTS) 1726
47.15.15 OTG general core configuration register (OTG_GCCFG) 1727
47.15.16 OTG core ID register (OTG_CID) 1729
47.15.17 OTG core LPM configuration register (OTG_GLPMCFG) 1729
47.15.18 OTG power down register (OTG_GPWRDN) 1733
47.15.19 OTG ADP timer, control and status register (OTG_GADPCTL) 1733
47.15.20 OTG host periodic transmit FIFO size register (OTG_HPTXFSIZ) 1735

47.15.21 OTG device IN endpoint transmit FIFO x size register (OTG_DIEPTXFx) 1736
47.15.22 Host-mode registers 1736
47.15.23 OTG host configuration register (OTG_HCFG) 1736
47.15.24 OTG host frame interval register (OTG_HFIR) 1737
47.15.25 OTG host frame number/frame time remaining register (OTG_HFNUM) 1738
47.15.26 OTG_Host periodic transmit FIFO/queue status register (OTG_HPTXSTS) 1739
47.15.27 OTG host all channels interrupt register (OTG_HAINT) 1740
47.15.28 OTG host all channels interrupt mask register (OTG_HAINTMSK) 1740
47.15.29 OTG host port control and status register (OTG_HPRT) 1741
47.15.30 OTG host channel x characteristics register (OTG_HCCHARx) 1743
47.15.31 OTG host channel x interrupt register (OTG_HCINTx) 1744
47.15.32 OTG host channel x interrupt mask register (OTG_HCINTMSKx) . . 1745
47.15.33 OTG host channel x transfer size register (OTG_HCTSIZx) 1746
47.15.34 Device-mode registers 1747
47.15.35 OTG device configuration register (OTG_DCFG) 1747
47.15.36 OTG device control register (OTG_DCTL) 1749
47.15.37 OTG device status register (OTG_DSTS) 1751
47.15.38 OTG device IN endpoint common interrupt mask register (OTG_DIEPMSK) 1752
47.15.39 OTG device OUT endpoint common interrupt mask register (OTG_DOEPMSK) 1753
47.15.40 OTG device all endpoints interrupt register (OTG_DAINT) 1754
47.15.41 OTG all endpoints interrupt mask register (OTG_DAINTMSK) 1755
47.15.42 OTG device V_{BUS} discharge time register (OTG_DVBUSDIS) 1755
47.15.43 OTG device V_{BUS} pulsing time register (OTG_DVBUSPULSE) 1756
47.15.44 OTG device IN endpoint FIFO empty interrupt mask register (OTG_DIEPEMPMSK) 1756
47.15.45 OTG device control IN endpoint 0 control register (OTG_DIEPCTL0) 1757
47.15.46 OTG device IN endpoint x control register (OTG_DIEPCTLx) 1758
47.15.47 OTG device IN endpoint x interrupt register (OTG_DIEPINTx) 1761
47.15.48 OTG device IN endpoint 0 transfer size register (OTG_DIEPTSIZ0) 1762

47.15.49 OTG device IN endpoint transmit FIFO status register (OTG_DTXFSTSx) . . . 1763
47.15.50 OTG device IN endpoint x transfer size register (OTG_DIEPTSIZx) . 1764
47.15.51 OTG device control OUT endpoint 0 control register (OTG_DOEPCTL0) . . . 1765
47.15.52 OTG device OUT endpoint x interrupt register (OTG_DOEPINTx) . . 1766
47.15.53 OTG device OUT endpoint 0 transfer size register (OTG_DOEPTSIZ0) . . . 1768
47.15.54 OTG device OUT endpoint x control register (OTG_DOEPCTLx) . . . 1769
47.15.55 OTG device OUT endpoint x transfer size register (OTG_DOEPTSIZx) . . . 1771
47.15.56 OTG power and clock gating control register (OTG_PCGCCTL) . . . 1772
47.15.57 OTG_FS register map . . . 1773
47.16 OTG_FS programming model . . . 1782
47.16.1 Core initialization . . . 1782
47.16.2 Host initialization . . . 1782
47.16.3 Device initialization . . . 1783
47.16.4 Host programming model . . . 1784
47.16.5 Device programming model . . . 1805
47.16.6 Worst case response time . . . 1826
47.16.7 OTG programming model . . . 1828

48 Debug support (DBG) . . . 1834
48.1 Overview . . . 1834
48.2 Reference Arm® documentation . . . 1835
48.3 SWJ debug port (serial wire and JTAG) . . . 1835
48.3.1 Mechanism to select the JTAG-DP or the SW-DP . . . 1836
48.4 Pinout and debug port pins . . . 1836
48.4.1 SWJ debug port pins . . . 1837
48.4.2 Flexible SWJ-DP pin assignment . . . 1837
48.4.3 Internal pull-up and pull-down on JTAG pins . . . 1838
48.4.4 Using serial wire and releasing the unused debug pins as GPIOs . . 1839
48.5 STM32L47x/L48x/L49x/L4Ax JTAG TAP connection . . . 1839
48.6 ID codes and locking mechanism . . . 1840
48.6.1 MCU device ID code . . . 1841
48.6.2 Boundary scan TAP . . . 1841

48.6.3 Cortex®-M4 TAP 1841
48.6.4 Cortex®-M4 JEDEC-106 ID code 1842
48.7 JTAG debug port 1842
48.8 SW debug port 1844
48.8.1 SW protocol introduction 1844
48.8.2 SW protocol sequence 1844
48.8.3 SW-DP state machine (reset, idle states, ID code) 1845
48.8.4 DP and AP read/write accesses 1845
48.8.5 SW-DP registers 1846
48.8.6 SW-AP registers 1847
48.9 AHB-AP (AHB access port) - valid for both JTAG-DP and SW-DP 1847
48.10 Core debug 1848
48.11 Capability of the debugger host to connect under system reset 1848
48.12 FPB (Flash patch breakpoint) 1849
48.13 DWT (data watchpoint trigger) 1849
48.14 ITM (instrumentation trace macrocell) 1850
48.14.1 General description 1850
48.14.2 Time stamp packets, synchronization and overflow packets 1850
48.15 ETM (Embedded trace macrocell) 1852
48.15.1 General description 1852
48.15.2 Signal protocol, packet types 1852
48.15.3 Main ETM registers 1852
48.15.4 Configuration example 1853
48.16 MCU debug component (DBGMCU) 1853
48.16.1 Debug support for low-power modes 1853
48.16.2 Debug support for timers, RTC, watchdog, bxCAN and I^2C 1854
48.16.3 Debug MCU configuration register (DBGMCU_CR) 1854
48.16.4 Debug MCU APB1 freeze register1(DBGMCU_APB1FZR1) 1855
48.16.5 Debug MCU APB1 freeze register 2 (DBGMCU_APB1FZR2) 1857
48.16.6 Debug MCU APB2 freeze register (DBGMCU_APB2FZR) 1857
48.17 TPIU (trace port interface unit) 1859
48.17.1 Introduction 1859
48.17.2 TRACE pin assignment 1859
48.17.3 TPUI formatter 1861
48.17.4 TPUI frame synchronization packets 1862

48.17.5 Transmission of the synchronization frame packet 1862
48.17.6 Synchronous mode 1862
48.17.7 Asynchronous mode 1863
48.17.8 TRACECLKIN connection inside the STM32L47x/L48x/L49x/L4Ax 1863
48.17.9 TPIU registers 1864
48.17.10 Example of configuration 1865
48.18 DBG register map 1866

49 Device electronic signature 1867
49.1 Unique device ID register (96 bits) 1867
49.2 Flash size data register 1868
49.3 Package data register 1869

50 Revision history 1870

List of tables

Table 1. STM32L47x/L48x devices memory map and peripheral register boundary addresses . . . 78
Table 2. STM32L49x/L4Ax devices memory map and peripheral register boundary addresses . . . 83
Table 3. SRAM2 organization . . . 88
Table 4. Boot modes . . . 91
Table 5. Memory mapping versus boot mode/physical remap . . . 92
Table 6. Boot modes . . . 93
Table 7. Memory mapping versus boot mode/physical remap . . . 94
Table 8. Flash module - 1 MB dual bank organization . . . 97
Table 9. Flash module - 512 KB dual bank organization . . . 98
Table 10. Flash module - 256 KB dual bank organization . . . 99
Table 11. Number of wait states according to CPU clock (HCLK) frequency . . . 100
Table 12. Option byte format . . . 110
Table 13. Option byte organization . . . 110
Table 14. Flash memory read protection status . . . 118
Table 15. Access status versus protection level and execution modes . . . 120
Table 16. Flash interrupt request . . . 123
Table 17. Flash interface - register map and reset values . . . 138
Table 18. Segment accesses according to the Firewall state . . . 143
Table 19. Segment granularity and area ranges . . . 144
Table 20. Firewall register map and reset values . . . 152
Table 21. PVM features . . . 163
Table 22. Low-power mode summary . . . 166
Table 23. Functionalities depending on the working mode . . . 167
Table 24. Low-power run . . . 171
Table 25. Sleep . . . 172
Table 26. Low-power sleep . . . 174
Table 27. Stop 0 mode . . . 176
Table 28. Stop 1 mode . . . 177
Table 29. Stop 2 mode . . . 179
Table 30. Standby mode . . . 181
Table 31. Shutdown mode . . . 183
Table 32. PWR register map and reset values . . . 201
Table 33. Clock source frequency . . . 216
Table 34. RCC register map and reset values . . . 278
Table 35. CRS features . . . 283
Table 36. Effect of low-power modes on CRS . . . 287
Table 37. Interrupt control bits . . . 287
Table 38. CRS register map and reset values . . . 293
Table 39. Port bit configuration table . . . 296
Table 40. GPIO register map and reset values . . . 313
Table 41. SYSCFG register map and reset values . . . 326
Table 42. STM32L47x/L48x/L49x/L4Ax peripherals interconnect matrix . . . 328
Table 43. DMA1 and DMA2 implementation . . . 338
Table 44. DMA1 requests for each channel . . . 340
Table 45. DMA2 requests for each channel . . . 341
Table 46. Programmable data width and endian behavior (when PINC = MINC = 1) . . . 348

Table 47. DMA interrupt requests . . . 350
Table 48. DMA register map and reset values . . . 359
Table 49. Supported color mode in input . . . 365
Table 50. Data order in memory . . . 366
Table 51. Alpha mode configuration . . . 367
Table 52. Supported CLUT color mode . . . 368
Table 53. CLUT data order in system memory . . . 368
Table 54. Supported color mode in output . . . 369
Table 55. Data order in memory . . . 369
Table 56. DMA2D interrupt requests . . . 374
Table 57. DMA2D register map and reset values . . . 394
Table 58. STM32L47x/L48x/L49x/L4Ax vector table . . . 397
Table 59. EXTI lines connections . . . 404
Table 60. Extended interrupt/event controller register map and reset values. . . . 413
Table 61. CRC internal input/output signals . . . 415
Table 62. CRC register map and reset values . . . 419
Table 63. NOR/PSRAM bank selection . . . 424
Table 64. NOR/PSRAM External memory address . . . 424
Table 65. NAND memory mapping and timing registers. . . . 425
Table 66. NAND bank selection . . . 425
Table 67. Programmable NOR/PSRAM access parameters . . . 427
Table 68. Non-multiplexed I/O NOR Flash memory . . . 427
Table 69. 16-bit multiplexed I/O NOR Flash memory . . . 428
Table 70. Non-multiplexed I/Os PSRAM/SRAM . . . 428
Table 71. 16-Bit multiplexed I/O PSRAM . . . 428
Table 72. NOR Flash/PSRAM: example of supported memories and transactions . . . 429
Table 73. FMC_BCRx bitfields (mode 1) . . . 432
Table 74. FMC_BTRx bitfields (mode 1) . . . 433
Table 75. FMC_BCRx bitfields (mode A) . . . 435
Table 76. FMC_BTRx bitfields (mode A) . . . 435
Table 77. FMC_BWTRx bitfields (mode A). . . . 436
Table 78. FMC_BCRx bitfields (mode 2/B). . . . 438
Table 79. FMC_BTRx bitfields (mode 2/B) . . . 438
Table 80. FMC_BWTRx bitfields (mode 2/B) . . . 439
Table 81. FMC_BCRx bitfields (mode C) . . . 440
Table 82. FMC_BTRx bitfields (mode C) . . . 441
Table 83. FMC_BWTRx bitfields (mode C). . . . 441
Table 84. FMC_BCRx bitfields (mode D) . . . 443
Table 85. FMC_BTRx bitfields (mode D) . . . 443
Table 86. FMC_BWTRx bitfields (mode D). . . . 444
Table 87. FMC_BCRx bitfields (Muxed mode) . . . 445
Table 88. FMC_BTRx bitfields (Muxed mode) . . . 446
Table 89. FMC_BCRx bitfields (Synchronous multiplexed read mode) . . . 451
Table 90. FMC_BTRx bitfields (Synchronous multiplexed read mode) . . . 452
Table 91. FMC_BCRx bitfields (Synchronous multiplexed write mode) . . . 453
Table 92. FMC_BTRx bitfields (Synchronous multiplexed write mode) . . . 454
Table 93. Programmable NAND Flash access parameters . . . 462
Table 94. 8-bit NAND Flash . . . 462
Table 95. 16-bit NAND Flash . . . 463
Table 96. Supported memories and transactions . . . 464
Table 97. ECC result relevant bits . . . 473

Table 98. FMC register map and reset values . . . 474
Table 99. QUADSPI implementation . . . 476
Table 100. QUADSPI pins . . . 477
Table 101. QUADSPI interrupt requests. . . . 491
Table 102. QUADSPI register map and reset values . . . 504
Table 103. Main ADC features . . . 507
Table 104. ADC internal input/output signals . . . 509
Table 105. ADC input/output pins. . . . 509
Table 106. Configuring the trigger polarity for regular external triggers . . . 527
Table 107. Configuring the trigger polarity for injected external triggers . . . 527
Table 108. ADC1, ADC2 and ADC3 - External triggers for regular channels. . . . 528
Table 109. ADC1, ADC2 and ADC3 - External trigger for injected channels . . . 529
Table 110. TSAR timings depending on resolution . . . 541
Table 111. Offset computation versus data resolution . . . 544
Table 112. Analog watchdog channel selection . . . 555
Table 113. Analog watchdog 1 comparison . . . 556
Table 114. Analog watchdog 2 and 3 comparison . . . 556
Table 115. Maximum output results versus N and M (gray cells indicate truncation). . . . 560
Table 116. Oversampler operating modes summary . . . 564
Table 117. ADC interrupts per each ADC. . . . 583
Table 118. DELAY bits versus ADC resolution. . . . 615
Table 119. ADC global register map. . . . 616
Table 120. ADC register map and reset values for each ADC (offset=0x000 for master ADC, 0x100 for slave ADC). . . . 617
Table 121. ADC register map and reset values (master and slave ADC common registers) offset = 0x300 . . . 619
Table 122. DAC implementation . . . 621
Table 123. DAC input/output pins. . . . 623
Table 124. DAC trigger selection . . . 626
Table 125. Sample and refresh timings . . . 630
Table 126. Channel output modes summary . . . 631
Table 127. Effect of low-power modes on DAC . . . 637
Table 128. DAC interrupts . . . 638
Table 129. DAC register map and reset values . . . 655
Table 130. DCMI input/output pins . . . 658
Table 131. Positioning of captured data bytes in 32-bit words (8-bit width) . . . 660
Table 132. Positioning of captured data bytes in 32-bit words (10-bit width) . . . 660
Table 133. Positioning of captured data bytes in 32-bit words (12-bit width) . . . 660
Table 134. Positioning of captured data bytes in 32-bit words (14-bit width) . . . 661
Table 135. Data storage in monochrome progressive video format . . . 666
Table 136. Data storage in RGB progressive video format . . . 667
Table 137. Data storage in YCbCr progressive video format . . . 667
Table 138. Data storage in YCbCr progressive video format - Y extraction mode . . . 667
Table 139. DCMI interrupts. . . . 668
Table 140. DCMI register map and reset values . . . 680
Table 141. VREF buffer modes . . . 681
Table 142. VREFBUF register map and reset values. . . . 684
Table 143. COMP1 input plus assignment . . . 686
Table 144. COMP1 input minus assignment . . . 686
Table 145. COMP2 input plus assignment . . . 687
Table 146. COMP2 input minus assignment . . . 687
Table 147. Comparator behavior in the low power modes . . . 690

Table 148. Interrupt control bits . . . 691
Table 149. COMP register map and reset values. . . . 696
Table 150. Operational amplifier possible connections . . . 698
Table 151. Operating modes and calibration . . . 703
Table 152. Effect of low-power modes on the OPAMP . . . 704
Table 153. OPAMP register map and reset values . . . 709
Table 154. DFSDM1 implementation . . . 712
Table 155. DFSDM external pins . . . 714
Table 156. DFSDM internal signals . . . 714
Table 157. DFSDM triggers connection . . . 714
Table 158. DFSDM break connection. . . . 715
Table 159. Filter maximum output resolution (peak data values from filter output) for some FOSR values . . . 730
Table 160. Integrator maximum output resolution (peak data values from integrator output) for some IOSR values and FOSR = 256 and Sinc3 filter type (largest data) . . . 731
Table 161. DFSDM interrupt requests . . . 739
Table 162. DFSDM register map and reset values. . . . 760
Table 163. Example of frame rate calculation . . . 773
Table 164. Blink frequency . . . 781
Table 165. Remapping capability . . . 786
Table 166. LCD behavior in low-power modes. . . . 791
Table 167. LCD interrupt requests . . . 791
Table 168. LCD register map and reset values . . . 800
Table 169. Acquisition sequence summary . . . 805
Table 170. Spread spectrum deviation versus AHB clock frequency . . . 807
Table 171. I/O state depending on its mode and IODEF bit value . . . 808
Table 172. Effect of low-power modes on TSC . . . 810
Table 173. Interrupt control bits . . . 810
Table 174. TSC register map and reset values . . . 819
Table 175. RNG internal input/output signals . . . 822
Table 176. RNG interrupt requests. . . . 827
Table 177. RNG register map and reset map. . . . 832
Table 178. AES internal input/output signals. . . . 834
Table 179. CTR mode initialization vector definition. . . . 853
Table 180. GCM last block definition . . . 855
Table 181. GCM mode IVI bitfield initialization . . . 856
Table 182. Initialization of AES_IVRx registers in CCM mode . . . 863
Table 183. Key endianness in AES_KEYRx registers (128- or 256-bit key length) . . . 868
Table 184. DMA channel configuration for memory-to-AES data transfer . . . 869
Table 185. DMA channel configuration for AES-to-memory data transfer . . . 870
Table 186. AES interrupt requests . . . 872
Table 187. Processing latency (in clock cycle) for ECB, CBC and CTR. . . . 872
Table 188. Processing latency for GCM and CCM (in clock cycle) . . . 872
Table 189. AES register map and reset values . . . 884
Table 190. HASH internal input/output signals . . . 888
Table 191. Hash processor outputs . . . 891
Table 192. HASH interrupt requests. . . . 898
Table 193. Processing time (in clock cycle) . . . 898
Table 194. HASH1 register map and reset values . . . 908
Table 195. Behavior of timer outputs versus BRK/BRK2 inputs. . . . 951
Table 196. Counting direction versus encoder signals . . . 958
Table 197. TIMx internal trigger connection . . . 975

Table 198. Output control bits for complementary OCx and OCxN channels with break feature 989
Table 199. TIM1 register map and reset values 1009
Table 200. TIM8 register map and reset values 1011
Table 201. Counting direction versus encoder signals 1048
Table 202. TIMx internal trigger connection 1065
Table 203. Output control bit for standard OCx channels 1075
Table 204. TIM2/TIM3/TIM4/TIM5 register map and reset values 1083
Table 205. TIMx Internal trigger connection 1128
Table 206. Output control bits for complementary OCx and OCxN channels with break feature (TIM15) 1138
Table 207. TIM15 register map and reset values 1146
Table 208. Output control bits for complementary OCx and OCxN channels with break feature (TIM16/17) 1159
Table 209. TIM16/TIM17 register map and reset values 1170
Table 210. TIMx register map and reset values 1184
Table 211. STM32L47x/L48x/L49x/L4Ax LPTIM features 1186
Table 212. LPTIM1 external trigger connection 1187
Table 213. LPTIM2 external trigger connection 1187
Table 214. Prescaler division ratios 1189
Table 215. Encoder counting scenarios 1195
Table 216. Effect of low-power modes on the LPTIM 1196
Table 217. Interrupt events 1197
Table 218. LPTIM register map and reset values 1207
Table 219. IWDG register map and reset values 1217
Table 220. WWDG register map and reset values 1223
Table 221. RTC pin PC13 configuration 1227
Table 222. RTC_OUT mapping 1228
Table 223. RTC functions over modes 1229
Table 224. Effect of low-power modes on RTC 1241
Table 225. Interrupt control bits 1242
Table 226. RTC register map and reset values 1267
Table 227. STM32L49x/L4Ax devices I2C implementation 1270
Table 228. STM32L47x/L48x devices I2C implementation 1270
Table 229. I2C input/output pins 1273
Table 230. I2C internal input/output signals 1273
Table 231. Comparison of analog vs. digital filters 1275
Table 232. I2C-SMBus specification data setup and hold times 1278
Table 233. I2C configuration 1282
Table 234. I2C-SMBus specification clock timings 1293
Table 235. Examples of timing settings for fI2CCLK = 8 MHz 1303
Table 236. Examples of timings settings for fI2CCLK = 16 MHz 1303
Table 237. Examples of timings settings for fI2CCLK = 48 MHz 1304
Table 238. SMBus timeout specifications 1306
Table 239. SMBus with PEC configuration 1308
Table 240. Examples of TIMEOUTA settings for various I2CCLK frequencies (max $t_{TIMEOUT}$ = 25 ms) 1309
Table 241. Examples of TIMEOUTB settings for various I2CCLK frequencies 1309
Table 242. Examples of TIMEOUTA settings for various I2CCLK frequencies (max t_{IDLE} = 50 µs) 1310
Table 243. Effect of low-power modes on the I2C 1321
Table 244. I2C Interrupt requests 1322
Table 245. I2C register map and reset values 1338

Table 246. STM32L47x/L48x/L49x/L4Ax USART/UART/LPUART features. 1342
Table 247. Noise detection from sampled data 1354
Table 248. Error calculation for programmed baud rates at f_{CK} = 72MHz in both cases of oversampling by 16 or by 8. 1357
Table 249. Tolerance of the USART receiver when BRR [3:0] = 0000. 1359
Table 250. Tolerance of the USART receiver when BRR [3:0] is different from 0000 1359
Table 251. Frame formats 1363
Table 252. Effect of low-power modes on the USART 1382
Table 253. USART interrupt requests. 1382
Table 254. USART register map and reset values 1406
Table 255. Error calculation for programmed baud rates at fck = 32,768 KHz. 1420
Table 256. Error calculation for programmed baud rates at fck = 80 MHz 1420
Table 257. Tolerance of the LPUART receiver. 1421
Table 258. Frame formats 1424
Table 259. Effect of low-power modes on the LPUART 1432
Table 260. LPUART interrupt requests. 1433
Table 261. LPUART register map and reset values 1449
Table 262. STM32L47x/L48x/L49x/L4Ax SPI implementation 1451
Table 263. STM32L47x/L48x/L49x/L4Ax SPI implementation 1451
Table 264. SPI interrupt requests 1475
Table 265. SPI register map and reset values 1484
Table 266. SAI internal input/output signals 1488
Table 267. SAI input/output pins. 1488
Table 268. External synchronization selection 1490
Table 269. Example of possible audio frequency sampling range 1497
Table 270. SOPD pattern 1503
Table 271. Parity bit calculation 1503
Table 272. Audio sampling frequency versus symbol rates 1504
Table 273. SAI interrupt sources 1513
Table 274. SAI register map and reset values 1540
Table 275. Effect of low-power modes on SWPMI 1557
Table 276. Interrupt control bits 1558
Table 277. Buffer modes selection for transmission/reception 1560
Table 278. SWPMI register map and reset values 1567
Table 279. SDMMC I/O definitions 1571
Table 280. Command format 1576
Table 281. Short response format 1577
Table 282. Long response format. 1577
Table 283. Command path status flags 1577
Table 284. Data token format 1580
Table 285. DPSM flags. 1581
Table 286. Transmit FIFO status flags 1582
Table 287. Receive FIFO status flags 1582
Table 288. Card status 1593
Table 289. SD status 1596
Table 290. Speed class code field 1597
Table 291. Performance move field 1598
Table 292. AU_SIZE field 1598
Table 293. Maximum AU size. 1598
Table 294. Erase size field 1599
Table 295. Erase timeout field 1599
Table 296. Erase offset field 1599

Table 297. Block-oriented write commands . . . 1602
Table 298. Block-oriented write protection commands . . . 1603
Table 299. Erase commands . . . 1603
Table 300. I/O mode commands . . . 1603
Table 301. Lock card . . . 1604
Table 302. Application-specific commands . . . 1604
Table 303. R1 response . . . 1605
Table 304. R2 response . . . 1605
Table 305. R3 response . . . 1606
Table 306. R4 response . . . 1606
Table 307. R4b response . . . 1606
Table 308. R5 response . . . 1607
Table 309. R6 response . . . 1608
Table 310. Response type and SDMMC_RESPx registers . . . 1614
Table 311. SDMMC register map . . . 1625
Table 312. CAN implementation . . . 1628
Table 313. Transmit mailbox mapping . . . 1644
Table 314. Receive mailbox mapping . . . 1644
Table 315. bxCAN register map and reset values . . . 1670
Table 316. OTG_FS speeds supported . . . 1675
Table 317. OTG_FS implementation . . . 1678
Table 318. OTG_FS input/output pins . . . 1679
Table 319. OTG_FS input/output signals . . . 1680
Table 320. Compatibility of STM32 low power modes with the OTG . . . 1692
Table 321. Core global control and status registers (CSRs) . . . 1700
Table 322. Host-mode control and status registers (CSRs) . . . 1701
Table 323. Device-mode control and status registers . . . 1702
Table 324. Data FIFO (DFIFO) access register map . . . 1704
Table 325. Power and clock gating control and status registers . . . 1704
Table 326. TRDT values (FS) . . . 1711
Table 327. Minimum duration for soft disconnect . . . 1750
Table 328. OTG_FS register map and reset values . . . 1773
Table 329. SWJ debug port pins . . . 1837
Table 330. Flexible SWJ-DP pin assignment . . . 1837
Table 331. JTAG debug port data registers . . . 1842
Table 332. 32-bit debug port registers addressed through the shifted value A[3:2] . . . 1843
Table 333. Packet request (8-bits) . . . 1844
Table 334. ACK response (3 bits) . . . 1845
Table 335. DATA transfer (33 bits) . . . 1845
Table 336. SW-DP registers . . . 1846
Table 337. Cortex®-M4 AHB-AP registers . . . 1847
Table 338. Core debug registers . . . 1848
Table 339. Main ITM registers . . . 1850
Table 340. Main ETM registers . . . 1852
Table 341. Asynchronous TRACE pin assignment . . . 1859
Table 342. Synchronous TRACE pin assignment . . . 1860
Table 343. Flexible TRACE pin assignment . . . 1860
Table 344. Important TPIU registers . . . 1864
Table 345. DBG register map and reset values . . . 1866
Table 346. Document revision history . . . 1870

List of figures

Figure 1. System architecture for STM32L47x/L48x devices . . . 72
Figure 2. System architecture for STM32L49x/L4Ax . . . 73
Figure 3. Memory map for STM32L47x/L48x devices . . . 76
Figure 4. Memory map for STM32L49x/L4Ax devices . . . 77
Figure 5. Sequential 16-bit instructions execution . . . 102
Figure 6. Changing the Read protection (RDP) level . . . 120
Figure 7. STM32L47x/L48x/L49x/L4Ax firewall connection schematics . . . 141
Figure 8. Firewall functional states . . . 145
Figure 9. Power supply overview . . . 154
Figure 10. Internal main regulator overview . . . 159
Figure 11. Brown-out reset waveform . . . 162
Figure 12. PVD thresholds . . . 162
Figure 13. Low-power modes possible transitions . . . 165
Figure 14. Simplified diagram of the reset circuit . . . 204
Figure 15. Clock tree (for STM32L47x/L48x devices) . . . 208
Figure 16. Clock tree (for STM32L49x/L4Ax devices) . . . 210
Figure 17. HSE/ LSE clock sources . . . 211
Figure 18. Frequency measurement with TIM15 in capture mode . . . 219
Figure 19. Frequency measurement with TIM16 in capture mode . . . 220
Figure 20. Frequency measurement with TIM17 in capture mode . . . 220
Figure 21. CRS block diagram . . . 284
Figure 22. CRS counter behavior . . . 285
Figure 23. Basic structure of an I/O port bit . . . 295
Figure 24. Basic structure of a 5-Volt tolerant I/O port bit . . . 296
Figure 25. Input floating/pull up/pull down configurations . . . 301
Figure 26. Output configuration . . . 302
Figure 27. Alternate function configuration . . . 302
Figure 28. High impedance-analog configuration . . . 303
Figure 29. DMA1 request mapping . . . 339
Figure 30. DMA2 request mapping . . . 340
Figure 31. DMA block diagram . . . 342
Figure 32. DMA2D block diagram . . . 364
Figure 33. Configurable interrupt/event block diagram . . . 402
Figure 34. External interrupt/event GPIO mapping . . . 404
Figure 35. CRC calculation unit block diagram . . . 415
Figure 36. FMC block diagram . . . 421
Figure 37. FMC memory banks . . . 424
Figure 38. Mode 1 read access waveforms . . . 431
Figure 39. Mode 1 write access waveforms . . . 432
Figure 40. Mode A read access waveforms . . . 434
Figure 41. Mode A write access waveforms . . . 434
Figure 42. Mode 2 and mode B read access waveforms . . . 436
Figure 43. Mode 2 write access waveforms . . . 437
Figure 44. Mode B write access waveforms . . . 437
Figure 45. Mode C read access waveforms . . . 439
Figure 46. Mode C write access waveforms . . . 440
Figure 47. Mode D read access waveforms . . . 442
Figure 48. Mode D write access waveforms . . . 442

Figure 49. Muxed read access waveforms . . . 444
Figure 50. Muxed write access waveforms . . . 445
Figure 51. Asynchronous wait during a read access waveforms . . . 447
Figure 52. Asynchronous wait during a write access waveforms . . . 448
Figure 53. Wait configuration waveforms . . . 450
Figure 54. Synchronous multiplexed read mode waveforms - NOR, PSRAM (CRAM) . . . 451
Figure 55. Synchronous multiplexed write mode waveforms - PSRAM (CRAM) . . . 453
Figure 56. NAND Flash controller waveforms for common memory access . . . 465
Figure 57. Access to non ‘CE don’t care’ NAND-Flash . . . 466
Figure 58. QUADSPI block diagram when dual-flash mode is disabled . . . 477
Figure 59. QUADSPI block diagram when dual-flash mode is enabled . . . 477
Figure 60. An example of a read command in quad mode . . . 478
Figure 61. An example of a DDR command in quad mode . . . 482
Figure 62. nCS when CKMODE = 0 (T = CLK period) . . . 490
Figure 63. nCS when CKMODE = 1 in SDR mode (T = CLK period) . . . 490
Figure 64. nCS when CKMODE = 1 in DDR mode (T = CLK period) . . . 490
Figure 65. nCS when CKMODE = 1 with an abort (T = CLK period) . . . 491
Figure 66. ADC block diagram . . . 508
Figure 67. ADC clock scheme . . . 511
Figure 68. ADC1 connectivity . . . 512
Figure 69. ADC2 connectivity . . . 513
Figure 70. ADC3 connectivity . . . 514
Figure 71. ADC calibration . . . 517
Figure 72. Updating the ADC calibration factor . . . 518
Figure 73. Mixing single-ended and differential channels . . . 518
Figure 74. Enabling / disabling the ADC . . . 520
Figure 75. Analog to digital conversion time . . . 525
Figure 76. Stopping ongoing regular conversions . . . 526
Figure 77. Stopping ongoing regular and injected conversions . . . 526
Figure 78. Triggers sharing between ADC master and ADC slave . . . 528
Figure 79. Injected conversion latency . . . 531
Figure 80. Example of JSQR queue of context (sequence change) . . . 534
Figure 81. Example of JSQR queue of context (trigger change) . . . 534
Figure 82. Example of JSQR queue of context with overflow before conversion . . . 535
Figure 83. Example of JSQR queue of context with overflow during conversion . . . 535
Figure 84. Example of JSQR queue of context with empty queue (case JQM=0) . . . 536
Figure 85. Example of JSQR queue of context with empty queue (case JQM=1) . . . 537
Figure 86. Flushing JSQR queue of context by setting JADSTP=1 (JQM=0). Case when JADSTP occurs during an ongoing conversion. . . . 537
Figure 87. Flushing JSQR queue of context by setting JADSTP=1 (JQM=0). Case when JADSTP occurs during an ongoing conversion and a new trigger occurs. . . . 538
Figure 88. Flushing JSQR queue of context by setting JADSTP=1 (JQM=0). Case when JADSTP occurs outside an ongoing conversion . . . 538
Figure 89. Flushing JSQR queue of context by setting JADSTP=1 (JQM=1) . . . 539
Figure 90. Flushing JSQR queue of context by setting ADDIS=1 (JQM=0) . . . 539
Figure 91. Flushing JSQR queue of context by setting ADDIS=1 (JQM=1) . . . 540
Figure 92. Single conversions of a sequence, software trigger . . . 542
Figure 93. Continuous conversion of a sequence, software trigger . . . 542
Figure 94. Single conversions of a sequence, hardware trigger . . . 543
Figure 95. Continuous conversions of a sequence, hardware trigger . . . 543
Figure 96. Right alignment (offset disabled, unsigned value) . . . 545

Figure 97. Right alignment (offset enabled, signed value). 546
Figure 98. Left alignment (offset disabled, unsigned value) 546
Figure 99. Left alignment (offset enabled, signed value) 547
Figure 100. Example of overrun (OVR) 548
Figure 101. AUTODLY=1, regular conversion in continuous mode, software trigger 551
Figure 102. AUTODLY=1, regular HW conversions interrupted by injected conversions (DISCEN=0; JDISCEN=0) 552
Figure 103. AUTODLY=1, regular HW conversions interrupted by injected conversions . . . . . (DISCEN=1, JDISCEN=1) 553
Figure 104. AUTODLY=1, regular continuous conversions interrupted by injected conversions 554
Figure 105. AUTODLY=1 in auto- injected mode (JAUTO=1) 554
Figure 106. Analog watchdog guarded area 555
Figure 107. ADCy_AWDx_OUT signal generation (on all regular channels). 557
Figure 108. ADCy_AWDx_OUT signal generation (AWDx flag not cleared by software) 558
Figure 109. ADCy_AWDx_OUT signal generation (on a single regular channel) 558
Figure 110. ADCy_AWDx_OUT signal generation (on all injected channels) 558
Figure 111. 20-bit to 16-bit result truncation 559
Figure 112. Numerical example with 5-bit shift and rounding 559
Figure 113. Triggered regular oversampling mode (TROVS bit = 1) 561
Figure 114. Regular oversampling modes (4x ratio) 562
Figure 115. Regular and injected oversampling modes used simultaneously 563
Figure 116. Triggered regular oversampling with injection 563
Figure 117. Oversampling in auto-injected mode 564
Figure 118. Dual ADC block diagram(1) 566
Figure 119. Injected simultaneous mode on 4 channels: dual ADC mode 567
Figure 120. Regular simultaneous mode on 16 channels: dual ADC mode 569
Figure 121. Interleaved mode on 1 channel in continuous conversion mode: dual ADC mode. 570
Figure 122. Interleaved mode on 1 channel in single conversion mode: dual ADC mode. 571
Figure 123. Interleaved conversion with injection 571
Figure 124. Alternate trigger: injected group of each ADC 572
Figure 125. Alternate trigger: 4 injected channels (each ADC) in discontinuous mode 573
Figure 126. Alternate + regular simultaneous 574
Figure 127. Case of trigger occurring during injected conversion 574
Figure 128. Interleaved single channel CH0 with injected sequence CH11, CH12 575
Figure 129. Two Interleaved channels (CH1, CH2) with injected sequence CH11, CH12 - case 1: Master interrupted first 575
Figure 130. Two Interleaved channels (CH1, CH2) with injected sequence CH11, CH12 - case 2: Slave interrupted first 575
Figure 131. DMA Requests in regular simultaneous mode when MDMA=0b00 576
Figure 132. DMA requests in regular simultaneous mode when MDMA=0b10 577
Figure 133. DMA requests in interleaved mode when MDMA=0b10 577
Figure 134. Temperature sensor channel block diagram 580
Figure 135. VBAT channel block diagram 581
Figure 136. VREFINT channel block diagram 582
Figure 137. Dual-channel DAC block diagram 622
Figure 138. Data registers in single DAC channel mode 624
Figure 139. Data registers in dual DAC channel mode 624
Figure 140. Timing diagram for conversion with trigger disabled TEN = 0 625
Figure 141. DAC LFSR register calculation algorithm 627
Figure 142. DAC conversion (SW trigger enabled) with LFSR wave generation 627
Figure 143. DAC triangle wave generation 628
Figure 144. DAC conversion (SW trigger enabled) with triangle wave generation 628

Figure 145. DAC Sample and hold mode phase diagram . . . 631
Figure 146. DCMI block diagram . . . 658
Figure 147. Top-level block diagram . . . 658
Figure 148. DCMI signal waveforms . . . 659
Figure 149. Timing diagram . . . 661
Figure 150. Frame capture waveforms in snapshot mode . . . 663
Figure 151. Frame capture waveforms in continuous grab mode . . . 664
Figure 152. Coordinates and size of the window after cropping . . . 664
Figure 153. Data capture waveforms . . . 665
Figure 154. Pixel raster scan order . . . 666
Figure 155. Comparator block diagram . . . 686
Figure 156. Window mode . . . 688
Figure 157. Comparator hysteresis . . . 689
Figure 158. Comparator output blanking . . . 689
Figure 159. Standalone mode: external gain setting mode . . . 699
Figure 160. Follower configuration . . . 700
Figure 161. PGA mode, internal gain setting (x2/x4/x8/x16), inverting input not used . . . 701
Figure 162. PGA mode, internal gain setting (x2/x4/x8/x16), inverting input used for filtering . . . 702
Figure 163. Single DFSDM block diagram . . . 713
Figure 164. Input channel pins redirection . . . 717
Figure 165. Channel transceiver timing diagrams . . . 720
Figure 166. Clock absence timing diagram for SPI . . . 721
Figure 167. Clock absence timing diagram for Manchester coding . . . 722
Figure 168. First conversion for Manchester coding (Manchester synchronization) . . . 724
Figure 169. DFSDM_CHyDATINR registers operation modes and assignment . . . 728
Figure 170. Example: Sinc3 filter response . . . 730
Figure 171. LCD controller block diagram . . . 772
Figure 172. 1/3 bias, 1/4 duty . . . 774
Figure 173. Static duty case 1 . . . 775
Figure 174. Static duty case 2 . . . 776
Figure 175. 1/2 duty, 1/2 bias . . . 777
Figure 176. 1/3 duty, 1/3 bias . . . 778
Figure 177. 1/4 duty, 1/3 bias . . . 779
Figure 178. 1/8 duty, 1/4 bias . . . 780
Figure 179. LCD voltage control . . . 783
Figure 180. Deadtime . . . 784
Figure 181. SEG/COM mux feature example . . . 789
Figure 182. Flowchart example . . . 790
Figure 183. TSC block diagram . . . 803
Figure 184. Surface charge transfer analog I/O group structure . . . 804
Figure 185. Sampling capacitor voltage variation . . . 805
Figure 186. Charge transfer acquisition sequence . . . 806
Figure 187. Spread spectrum variation principle . . . 807
Figure 188. RNG block diagram . . . 822
Figure 189. Entropy source model . . . 823
Figure 190. AES block diagram . . . 834
Figure 191. ECB encryption and decryption principle . . . 836
Figure 192. CBC encryption and decryption principle . . . 837
Figure 193. CTR encryption and decryption principle . . . 838
Figure 194. GCM encryption and authentication principle . . . 839
Figure 195. GMAC authentication principle . . . 839

Figure 196. CCM encryption and authentication principle . . . 840
Figure 197. STM32 cryptolib AES flowchart examples . . . 841
Figure 198. STM32 cryptolib AES flowchart examples (continued) . . . 842
Figure 199. Encryption key derivation for ECB/CBC decryption (Mode 2) . . . 845
Figure 200. Example of suspend mode management . . . 846
Figure 201. ECB encryption . . . 847
Figure 202. ECB decryption . . . 847
Figure 203. CBC encryption . . . 848
Figure 204. CBC decryption . . . 848
Figure 205. ECB/CBC encryption (Mode 1) . . . 849
Figure 206. ECB/CBC decryption (Mode 3) . . . 850
Figure 207. Message construction in CTR mode . . . 852
Figure 208. CTR encryption . . . 853
Figure 209. CTR decryption . . . 853
Figure 210. Message construction in GCM . . . 855
Figure 211. GCM authenticated encryption . . . 856
Figure 212. Message construction in GMAC mode . . . 860
Figure 213. GMAC authentication mode . . . 860
Figure 214. Message construction in CCM mode . . . 861
Figure 215. CCM mode authenticated decryption . . . 863
Figure 216. 128-bit block construction with respect to data swap . . . 867
Figure 217. DMA transfer of a 128-bit data block during input phase . . . 869
Figure 218. DMA transfer of a 128-bit data block during output phase . . . 870
Figure 219. AES interrupt signal generation . . . 871
Figure 220. HASH block diagram . . . 887
Figure 221. Message data swapping feature . . . 889
Figure 222. HASH suspend/resume mechanism . . . 895
Figure 223. Advanced-control timer block diagram . . . 910
Figure 224. Counter timing diagram with prescaler division change from 1 to 2 . . . 912
Figure 225. Counter timing diagram with prescaler division change from 1 to 4 . . . 912
Figure 226. Counter timing diagram, internal clock divided by 1 . . . 914
Figure 227. Counter timing diagram, internal clock divided by 2 . . . 914
Figure 228. Counter timing diagram, internal clock divided by 4 . . . 915
Figure 229. Counter timing diagram, internal clock divided by N . . . 915
Figure 230. Counter timing diagram, update event when ARPE=0 (TIMx_ARR not preloaded) . . . 916
Figure 231. Counter timing diagram, update event when ARPE=1 (TIMx_ARR preloaded) . . . 916
Figure 232. Counter timing diagram, internal clock divided by 1 . . . 918
Figure 233. Counter timing diagram, internal clock divided by 2 . . . 918
Figure 234. Counter timing diagram, internal clock divided by 4 . . . 919
Figure 235. Counter timing diagram, internal clock divided by N . . . 919
Figure 236. Counter timing diagram, update event when repetition counter is not used . . . 920
Figure 237. Counter timing diagram, internal clock divided by 1, TIMx_ARR = 0x6 . . . 921
Figure 238. Counter timing diagram, internal clock divided by 2 . . . 922
Figure 239. Counter timing diagram, internal clock divided by 4, TIMx_ARR=0x36 . . . 922
Figure 240. Counter timing diagram, internal clock divided by N . . . 923
Figure 241. Counter timing diagram, update event with ARPE=1 (counter underflow) . . . 923
Figure 242. Counter timing diagram, Update event with ARPE=1 (counter overflow) . . . 924
Figure 243. Update rate examples depending on mode and TIMx_RCR register settings . . . 925
Figure 244. External trigger input block . . . 926
Figure 245. TIM1 ETR input circuitry . . . 926
Figure 246. TIM8 ETR input circuitry . . . 927
Figure 247. Control circuit in normal mode, internal clock divided by 1 . . . 928

Figure 248. TI2 external clock connection example . . . 929
Figure 249. Control circuit in external clock mode 1 . . . 930
Figure 250. External trigger input block . . . 930
Figure 251. Control circuit in external clock mode 2 . . . 931
Figure 252. Capture/compare channel (example: channel 1 input stage) . . . 932
Figure 253. Capture/compare channel 1 main circuit . . . 933
Figure 254. Output stage of capture/compare channel (channel 1, idem ch. 2 and 3) . . . 933
Figure 255. Output stage of capture/compare channel (channel 4) . . . 934
Figure 256. Output stage of capture/compare channel (channel 5, idem ch. 6) . . . 934
Figure 257. PWM input mode timing . . . 936
Figure 258. Output compare mode, toggle on OC1 . . . 938
Figure 259. Edge-aligned PWM waveforms (ARR=8) . . . 939
Figure 260. Center-aligned PWM waveforms (ARR=8) . . . 940
Figure 261. Generation of 2 phase-shifted PWM signals with 50% duty cycle . . . 942
Figure 262. Combined PWM mode on channel 1 and 3 . . . 943
Figure 263. 3-phase combined PWM signals with multiple trigger pulses per period . . . 944
Figure 264. Complementary output with dead-time insertion . . . 945
Figure 265. Dead-time waveforms with delay greater than the negative pulse . . . 945
Figure 266. Dead-time waveforms with delay greater than the positive pulse . . . 946
Figure 267. Break and Break2 circuitry overview . . . 948
Figure 268. Various output behavior in response to a break event on BRK (OSSI = 1) . . . 950
Figure 269. PWM output state following BRK and BRK2 pins assertion (OSSI=1) . . . 951
Figure 270. PWM output state following BRK assertion (OSSI=0) . . . 952
Figure 271. Output redirection . . . 952
Figure 272. Clearing TIMx OCxREF . . . 953
Figure 273. 6-step generation, COM example (OSSR=1) . . . 954
Figure 274. Example of one pulse mode. . . . 955
Figure 275. Retriggerable one pulse mode . . . 957
Figure 276. Example of counter operation in encoder interface mode. . . . 958
Figure 277. Example of encoder interface mode with TI1FP1 polarity inverted. . . . 959
Figure 278. Measuring time interval between edges on 3 signals . . . 960
Figure 279. Example of Hall sensor interface . . . 962
Figure 280. Control circuit in reset mode . . . 963
Figure 281. Control circuit in Gated mode . . . 964
Figure 282. Control circuit in trigger mode . . . 965
Figure 283. Control circuit in external clock mode 2 + trigger mode . . . 966
Figure 284. General-purpose timer block diagram . . . 1015
Figure 285. Counter timing diagram with prescaler division change from 1 to 2 . . . 1017
Figure 286. Counter timing diagram with prescaler division change from 1 to 4 . . . 1017
Figure 287. Counter timing diagram, internal clock divided by 1 . . . 1018
Figure 288. Counter timing diagram, internal clock divided by 2 . . . 1019
Figure 289. Counter timing diagram, internal clock divided by 4 . . . 1019
Figure 290. Counter timing diagram, internal clock divided by N . . . 1020
Figure 291. Counter timing diagram, Update event when ARPE=0 (TIMx_ARR not preloaded). . . . 1020
Figure 292. Counter timing diagram, Update event when ARPE=1 (TIMx_ARR preloaded). . . . 1021
Figure 293. Counter timing diagram, internal clock divided by 1 . . . 1022
Figure 294. Counter timing diagram, internal clock divided by 2 . . . 1022
Figure 295. Counter timing diagram, internal clock divided by 4 . . . 1023
Figure 296. Counter timing diagram, internal clock divided by N . . . 1023
Figure 297. Counter timing diagram, Update event when repetition counter is not used . . . 1024
Figure 298. Counter timing diagram, internal clock divided by 1, TIMx_ARR=0x6 . . . 1025

Figure 299. Counter timing diagram, internal clock divided by 2 1026
Figure 300. Counter timing diagram, internal clock divided by 4, TIMx_ARR=0x36 1026
Figure 301. Counter timing diagram, internal clock divided by N. 1027
Figure 302. Counter timing diagram, Update event with ARPE=1 (counter underflow). 1027
Figure 303. Counter timing diagram, Update event with ARPE=1 (counter overflow). 1028
Figure 304. Control circuit in normal mode, internal clock divided by 1 1029
Figure 305. TI2 external clock connection example. 1029
Figure 306. Control circuit in external clock mode 1 1030
Figure 307. External trigger input block 1031
Figure 308. Control circuit in external clock mode 2 1032
Figure 309. Capture/Compare channel (example: channel 1 input stage) 1033
Figure 310. Capture/Compare channel 1 main circuit 1033
Figure 311. Output stage of Capture/Compare channel (channel 1) 1034
Figure 312. PWM input mode timing 1036
Figure 313. Output compare mode, toggle on OC1. 1038
Figure 314. Edge-aligned PWM waveforms (ARR=8) 1039
Figure 315. Center-aligned PWM waveforms (ARR=8). 1040
Figure 316. Generation of 2 phase-shifted PWM signals with 50% duty cycle 1041
Figure 317. Combined PWM mode on channels 1 and 3 1043
Figure 318. Clearing TIMx OCxREF 1044
Figure 319. Example of one-pulse mode. 1045
Figure 320. Retriggerable one-pulse mode. 1047
Figure 321. Example of counter operation in encoder interface mode 1048
Figure 322. Example of encoder interface mode with TI1FP1 polarity inverted 1049
Figure 323. Control circuit in reset mode 1050
Figure 324. Control circuit in gated mode 1051
Figure 325. Control circuit in trigger mode. 1052
Figure 326. Control circuit in external clock mode 2 + trigger mode 1053
Figure 327. Master/Slave timer example 1053
Figure 328. Gating TIM2 with OC1REF of TIM3 1054
Figure 329. Gating TIM2 with Enable of TIM3 1055
Figure 330. Triggering TIM2 with update of TIM3 1056
Figure 331. Triggering TIM2 with Enable of TIM3 1056
Figure 332. Triggering TIM3 and TIM2 with TIM3 TI1 input. 1057
Figure 333. TIM15 block diagram 1088
Figure 334. TIM16/TIM17 block diagram 1089
Figure 335. Counter timing diagram with prescaler division change from 1 to 2 1091
Figure 336. Counter timing diagram with prescaler division change from 1 to 4 1091
Figure 337. Counter timing diagram, internal clock divided by 1 1093
Figure 338. Counter timing diagram, internal clock divided by 2 1093
Figure 339. Counter timing diagram, internal clock divided by 4 1094
Figure 340. Counter timing diagram, internal clock divided by N. 1094
Figure 341. Counter timing diagram, update event when ARPE=0 (TIMx_ARR not preloaded). 1095
Figure 342. Counter timing diagram, update event when ARPE=1 (TIMx_ARR preloaded). 1095
Figure 343. Update rate examples depending on mode and TIMx_RCR register settings 1097
Figure 344. Control circuit in normal mode, internal clock divided by 1 1098
Figure 345. TI2 external clock connection example. 1098
Figure 346. Control circuit in external clock mode 1 1099
Figure 347. Capture/compare channel (example: channel 1 input stage) 1100
Figure 348. Capture/compare channel 1 main circuit 1100

Figure 349. Output stage of capture/compare channel (channel 1). 1101
Figure 350. Output stage of capture/compare channel (channel 2 for TIM15) 1101
Figure 351. PWM input mode timing 1103
Figure 352. Output compare mode, toggle on OC1. 1105
Figure 353. Edge-aligned PWM waveforms (ARR=8) 1106
Figure 354. Combined PWM mode on channel 1 and 2 1107
Figure 355. Complementary output with dead-time insertion. 1108
Figure 356. Dead-time waveforms with delay greater than the negative pulse. 1108
Figure 357. Dead-time waveforms with delay greater than the positive pulse. 1109
Figure 358. Break circuitry overview 1111
Figure 359. Output behavior in response to a break 1113
Figure 360. Example of one pulse mode. 1115
Figure 361. Retriggerable one pulse mode 1116
Figure 362. Measuring time interval between edges on 2 signals 1118
Figure 363. Control circuit in reset mode 1119
Figure 364. Control circuit in gated mode 1120
Figure 365. Control circuit in trigger mode 1121
Figure 366. Basic timer block diagram. 1172
Figure 367. Counter timing diagram with prescaler division change from 1 to 2 1174
Figure 368. Counter timing diagram with prescaler division change from 1 to 4 1174
Figure 369. Counter timing diagram, internal clock divided by 1 1175
Figure 370. Counter timing diagram, internal clock divided by 2 1176
Figure 371. Counter timing diagram, internal clock divided by 4 1176
Figure 372. Counter timing diagram, internal clock divided by N. 1177
Figure 373. Counter timing diagram, update event when ARPE = 0 (TIMx_ARR not preloaded). 1177
Figure 374. Counter timing diagram, update event when ARPE=1 (TIMx_ARR preloaded). 1178
Figure 375. Control circuit in normal mode, internal clock divided by 1 1179
Figure 376. Low-power timer block diagram 1186
Figure 377. Glitch filter timing diagram 1188
Figure 378. LPTIM output waveform, single counting mode configuration 1190
Figure 379. LPTIM output waveform, Single counting mode configuration and Set-once mode activated (WAVE bit is set). 1191
Figure 380. LPTIM output waveform, Continuous counting mode configuration 1191
Figure 381. Waveform generation 1193
Figure 382. Encoder mode counting sequence 1196
Figure 383. IRTIM internal hardware connections with TIM16 and TIM17 1208
Figure 384. Independent watchdog block diagram 1209
Figure 385. Watchdog block diagram 1219
Figure 386. Window watchdog timing diagram 1220
Figure 387. RTC block diagram 1226
Figure 388. I2C block diagram 1272
Figure 389. I2C bus protocol 1274
Figure 390. Setup and hold timings 1276
Figure 391. I2C initialization flowchart 1279
Figure 392. Data reception 1280
Figure 393. Data transmission 1281
Figure 394. Slave initialization flowchart 1284
Figure 395. Transfer sequence flowchart for I2C slave transmitter, NOSTRETCH= 0 1286
Figure 396. Transfer sequence flowchart for I2C slave transmitter,

NOSTRETCH= 1 1287
Figure 397. Transfer bus diagrams for I2C slave transmitter. 1288
Figure 398. Transfer sequence flowchart for slave receiver with NOSTRETCH=0 1289
Figure 399. Transfer sequence flowchart for slave receiver with NOSTRETCH=1 1290
Figure 400. Transfer bus diagrams for I2C slave receiver 1290
Figure 401. Master clock generation 1292
Figure 402. Master initialization flowchart 1294
Figure 403. 10-bit address read access with HEAD10R=0 1294
Figure 404. 10-bit address read access with HEAD10R=1 1295
Figure 405. Transfer sequence flowchart for I2C master transmitter for N≤255 bytes 1296
Figure 406. Transfer sequence flowchart for I2C master transmitter for N>255 bytes 1297
Figure 407. Transfer bus diagrams for I2C master transmitter 1298
Figure 408. Transfer sequence flowchart for I2C master receiver for N≤255 bytes 1300
Figure 409. Transfer sequence flowchart for I2C master receiver for N >255 bytes 1301
Figure 410. Transfer bus diagrams for I2C master receiver 1302
Figure 411. Timeout intervals for $t_{LOW:SEXT}$, $t_{LOW:MEXT}$. 1307
Figure 412. Transfer sequence flowchart for SMBus slave transmitter N bytes + PEC. 1311
Figure 413. Transfer bus diagrams for SMBus slave transmitter (SBC=1) 1311
Figure 414. Transfer sequence flowchart for SMBus slave receiver N Bytes + PEC 1313
Figure 415. Bus transfer diagrams for SMBus slave receiver (SBC=1). 1314
Figure 416. Bus transfer diagrams for SMBus master transmitter. 1315
Figure 417. Bus transfer diagrams for SMBus master receiver. 1317
Figure 418. USART block diagram 1344
Figure 419. Word length programming 1346
Figure 420. Configurable stop bits. 1348
Figure 421. TC/TXE behavior when transmitting. 1349
Figure 422. Start bit detection when oversampling by 16 or 8. 1350
Figure 423. Data sampling when oversampling by 16. 1354
Figure 424. Data sampling when oversampling by 8. 1354
Figure 425. Mute mode using Idle line detection 1361
Figure 426. Mute mode using address mark detection 1362
Figure 427. Break detection in LIN mode (11-bit break length - LBDL bit is set). 1365
Figure 428. Break detection in LIN mode vs. Framing error detection. 1366
Figure 429. USART example of synchronous transmission. 1367
Figure 430. USART data clock timing diagram (M bits = 00). 1367
Figure 431. USART data clock timing diagram (M bits = 01) 1368
Figure 432. RX data setup/hold time 1368
Figure 433. ISO 7816-3 asynchronous protocol 1370
Figure 434. Parity error detection using the 1.5 stop bits 1371
Figure 435. IrDA SIR ENDEC- block diagram 1375
Figure 436. IrDA data modulation (3/16) -Normal Mode 1376
Figure 437. Transmission using DMA 1377
Figure 438. Reception using DMA. 1378
Figure 439. Hardware flow control between 2 USARTs 1378
Figure 440. RS232 RTS flow control 1379
Figure 441. RS232 CTS flow control 1380
Figure 442. USART interrupt mapping diagram 1383
Figure 443. LPUART block diagram 1411
Figure 444. Word length programming 1413
Figure 445. Configurable stop bits. 1414
Figure 446. TC/TXE behavior when transmitting. 1416
Figure 447. Mute mode using Idle line detection 1423

Figure 448. Mute mode using address mark detection . . . 1424
Figure 449. Transmission using DMA . . . 1427
Figure 450. Reception using DMA . . . 1428
Figure 451. Hardware flow control between 2 LPUARTs . . . 1428
Figure 452. RS232 RTS flow control . . . 1429
Figure 453. RS232 CTS flow control . . . 1430
Figure 454. LPUART interrupt mapping diagram . . . 1434
Figure 455. SPI block diagram . . . 1452
Figure 456. Full-duplex single master/ single slave application . . . 1453
Figure 457. Half-duplex single master/ single slave application . . . 1453
Figure 458. Simplex single master/single slave application (master in transmit-only/ slave in receive-only mode) . . . 1454
Figure 459. Master and three independent slaves . . . 1455
Figure 460. Multi-master application . . . 1456
Figure 461. Hardware/software slave select management . . . 1457
Figure 462. Data clock timing diagram . . . 1458
Figure 463. Data alignment when data length is not equal to 8-bit or 16-bit . . . 1459
Figure 464. Packing data in FIFO for transmission and reception . . . 1463
Figure 465. Master full-duplex communication . . . 1466
Figure 466. Slave full-duplex communication . . . 1467
Figure 467. Master full-duplex communication with CRC . . . 1468
Figure 468. Master full-duplex communication in packed mode . . . 1469
Figure 469. NSSP pulse generation in Motorola SPI master mode . . . 1472
Figure 470. TI mode transfer . . . 1473
Figure 471. SAI functional block diagram . . . 1487
Figure 472. Audio frame . . . 1491
Figure 473. FS role is start of frame + channel side identification (FSDEF = TRIS = 1) . . . 1493
Figure 474. FS role is start of frame (FSDEF = 0) . . . 1494
Figure 475. Slot size configuration with FBOFF = 0 in SAI_xSLOTR . . . 1495
Figure 476. First bit offset . . . 1495
Figure 477. Audio block clock generator overview . . . 1496
Figure 478. AC’97 audio frame . . . 1500
Figure 479. Example of typical AC’97 configuration on devices featuring at least 2 embedded SAIs (three external AC’97 decoders) . . . 1501
Figure 480. SPDIF format . . . 1502
Figure 481. SAI_xDR register ordering . . . 1503
Figure 482. Data companding hardware in an audio block in the SAI . . . 1507
Figure 483. Tristate strategy on SD output line on an inactive slot . . . 1508
Figure 484. Tristate on output data line in a protocol like I2S . . . 1509
Figure 485. Overrun detection error . . . 1510
Figure 486. FIFO underrun event . . . 1510
Figure 487. S1 signal coding . . . 1541
Figure 488. S2 signal coding . . . 1541
Figure 489. SWPMI block diagram . . . 1543
Figure 490. SWP bus states . . . 1545
Figure 491. SWP frame structure . . . 1546
Figure 492. SWPMI No software buffer mode transmission . . . 1547
Figure 493. SWPMI No software buffer mode transmission, consecutive frames . . . 1548
Figure 494. SWPMI Multi software buffer mode transmission . . . 1550
Figure 495. SWPMI No software buffer mode reception . . . 1552
Figure 496. SWPMI single software buffer mode reception . . . 1553
Figure 497. SWPMI Multi software buffer mode reception . . . 1555

Figure 498. SWPMI single buffer mode reception with CRC error. . . . 1556
Figure 499. “No response” and “no data” operations . . . 1569
Figure 500. (Multiple) block read operation . . . 1569
Figure 501. (Multiple) block write operation . . . 1569
Figure 502. Sequential read operation. . . . 1570
Figure 503. Sequential write operation . . . 1570
Figure 504. SDMMC block diagram . . . 1570
Figure 505. SDMMC adapter . . . 1572
Figure 506. Control unit . . . 1573
Figure 507. SDMMC_CK clock dephasing (BYPASS = 0). . . . 1574
Figure 508. SDMMC adapter command path . . . 1574
Figure 509. Command path state machine (SDMMC). . . . 1575
Figure 510. SDMMC command transfer . . . 1576
Figure 511. Data path . . . 1578
Figure 512. Data path state machine (DPSM) . . . 1579
Figure 513. CAN network topology . . . 1628
Figure 514. Dual-CAN block diagram . . . 1630
Figure 515. Single-CAN block diagram . . . 1631
Figure 516. bxCAN operating modes. . . . 1633
Figure 517. bxCAN in silent mode . . . 1634
Figure 518. bxCAN in loop back mode . . . 1634
Figure 519. bxCAN in combined mode . . . 1635
Figure 520. Transmit mailbox states . . . 1637
Figure 521. Receive FIFO states . . . 1638
Figure 522. Filter bank scale configuration - register organization . . . 1641
Figure 523. Example of filter numbering . . . 1642
Figure 524. Filtering mechanism - example. . . . 1643
Figure 525. CAN error state diagram. . . . 1644
Figure 526. Bit timing . . . 1646
Figure 527. CAN frames . . . 1647
Figure 528. Event flags and interrupt generation. . . . 1648
Figure 529. CAN mailbox registers . . . 1660
Figure 530. OTG_FS full-speed block diagram . . . 1679
Figure 531. OTG_FS A-B device connection. . . . 1681
Figure 532. USB_FS peripheral-only connection. . . . 1683
Figure 533. USB_FS host-only connection . . . 1687
Figure 534. SOF connectivity (SOF trigger output to TIM and ITR1 connection) . . . 1691
Figure 535. Updating OTG_HFIR dynamically (RLDCTRL = 1) . . . 1693
Figure 536. Device-mode FIFO address mapping and AHB FIFO access mapping . . . 1694
Figure 537. Host-mode FIFO address mapping and AHB FIFO access mapping. . . . 1695
Figure 538. Interrupt hierarchy. . . . 1699
Figure 539. Transmit FIFO write task . . . 1785
Figure 540. Receive FIFO read task . . . 1786
Figure 541. Normal bulk/control OUT/SETUP . . . 1787
Figure 542. Bulk/control IN transactions . . . 1791
Figure 543. Normal interrupt OUT . . . 1794
Figure 544. Normal interrupt IN . . . 1799
Figure 545. Isochronous OUT transactions . . . 1801
Figure 546. Isochronous IN transactions . . . 1804
Figure 547. Receive FIFO packet read . . . 1808
Figure 548. Processing a SETUP packet . . . 1810
Figure 549. Bulk OUT transaction . . . 1817

Figure 550. TRDT max timing case 1827
Figure 551. A-device SRP 1828
Figure 552. B-device SRP 1829
Figure 553. A-device HNP 1830
Figure 554. B-device HNP 1832
Figure 555. Block diagram of STM32 MCU and Cortex®-M4-level debug support 1834
Figure 556. SWJ debug port 1836
Figure 557. JTAG TAP connections 1840
Figure 558. TPIU block diagram 1859

1 Documentation conventions

1.1 General information

The STM32L47x/L48x/L49x/L4Ax devices have an Arm®[a] Cortex®-M4 core.

1.2 List of abbreviations for registers

The following abbreviations[b] are used in register descriptions:

read/write (rw)	Software can read and write to this bit.
read-only (r)	Software can only read this bit.
write-only (w)	Software can only write to this bit. Reading this bit returns the reset value.
read/clear write0 (rc_w0)	Software can read as well as clear this bit by writing 0. Writing 1 has no effect on the bit value.
read/clear write1 (rc_w1)	Software can read as well as clear this bit by writing 1. Writing 0 has no effect on the bit value.
read/clear write (rc_w)	Software can read as well as clear this bit by writing to the register. The value written to this bit is not important.
read/clear by read (rc_r)	Software can read this bit. Reading this bit automatically clears it to 0. Writing this bit has no effect on the bit value.
read/set by read (rs_r)	Software can read this bit. Reading this bit automatically sets it to 1. Writing this bit has no effect on the bit value.
read/set (rs)	Software can read as well as set this bit. Writing 0 has no effect on the bit value.
read/write once (rwo)	Software can only write once to this bit and can also read it at any time. Only a reset can return the bit to its reset value.
toggle (t)	The software can toggle this bit by writing 1. Writing 0 has no effect.
read-only write trigger (rt_w1)	Software can read this bit. Writing 1 triggers an event but has no effect on the bit value.
Reserved (Res.)	Reserved bit, must be kept at reset value.

a. Arm is a registered trademark of Arm Limited (or its subsidiaries) in the US and/or elsewhere.

b. This is an exhaustive list of all abbreviations applicable to STM microcontrollers, some of them may not be used in the current document.

1.3 Glossary

This section gives a brief definition of acronyms and abbreviations used in this document:

- **Word**: data of 32-bit length.
- **Half-word**: data of 16-bit length.
- **Byte**: data of 8-bit length.
- **IAP (in-application programming)**: IAP is the ability to re-program the Flash memory of a microcontroller while the user program is running.
- **ICP (in-circuit programming)**: ICP is the ability to program the Flash memory of a microcontroller using the JTAG protocol, the SWD protocol or the bootloader while the device is mounted on the user application board.
- **Option bytes**: product configuration bits stored in the Flash memory.
- **OBL**: option byte loader.
- **AHB**: advanced high-performance bus.
- **APB**: advanced peripheral bus.

1.4 Availability of peripherals

For availability of peripherals and their number across all sales types, refer to the particular device datasheet.

2 System and memory overview

2.1 System architecture

The main system consists of 32-bit multilayer AHB bus matrix that interconnects:

- Up to six masters:
  - Cortex®-M4 with FPU core I-bus
  - Cortex®-M4 with FPU core D-bus
  - Cortex®-M4 with FPU core S-bus
  - DMA1
  - DMA2
  - DMA2D (only for STM32L49x/L4Ax devices)
- Up to eight slaves:
  - Internal Flash memory on the ICode bus
  - Internal Flash memory on DCode bus
  - Internal SRAM1 (96 KB for STM32L47x/L48x devices, 256 KB for STM32L49x/L4Ax devices)
  - Internal SRAM2 (32 KB for STM32L47x/L48x devices, 64 KB for STM32L49x/L4Ax devices)
  - AHB1 peripherals including AHB to APB bridges and APB peripherals (connected to APB1 and APB2)
  - AHB2 peripherals
  - Flexible Memory Controller (FMC)[a]
  - Quad SPI memory interface (QUADSPI)[a]

The bus matrix provides access from a master to a slave, enabling concurrent access and efficient operation even when several high-speed peripherals work simultaneously. This architecture is shown in *Figure 1* for STM32L47x/L48x devices, and shown in *Figure 2* for STM32L49x/L4Ax devices:

a. On STM32L47x/L48x devices, FMC and QUADSPI slaves are merged into same port.

Figure 1. System architecture for STM32L47x/L48x devices

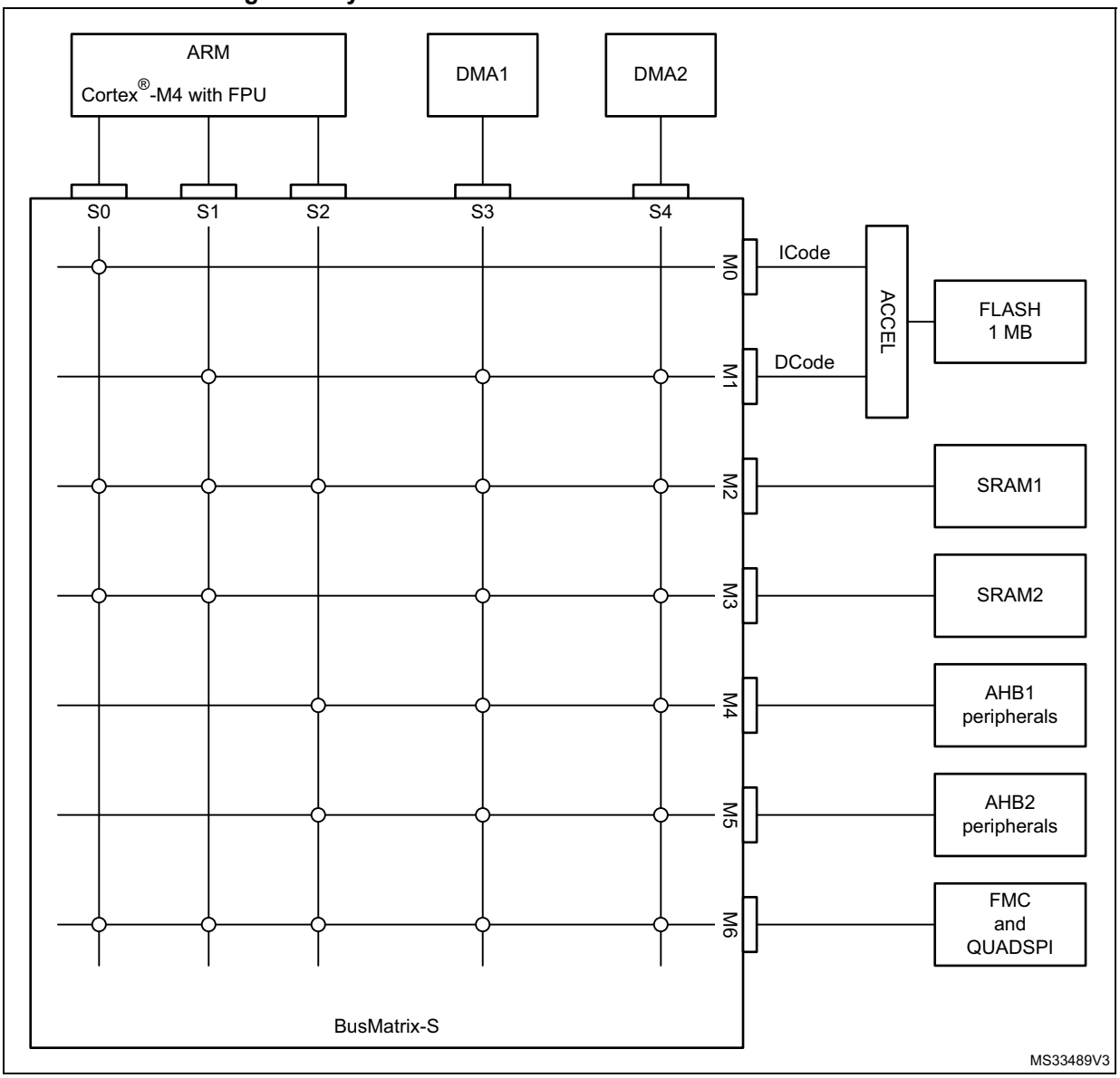

Figure 2. System architecture for STM32L49x/L4Ax

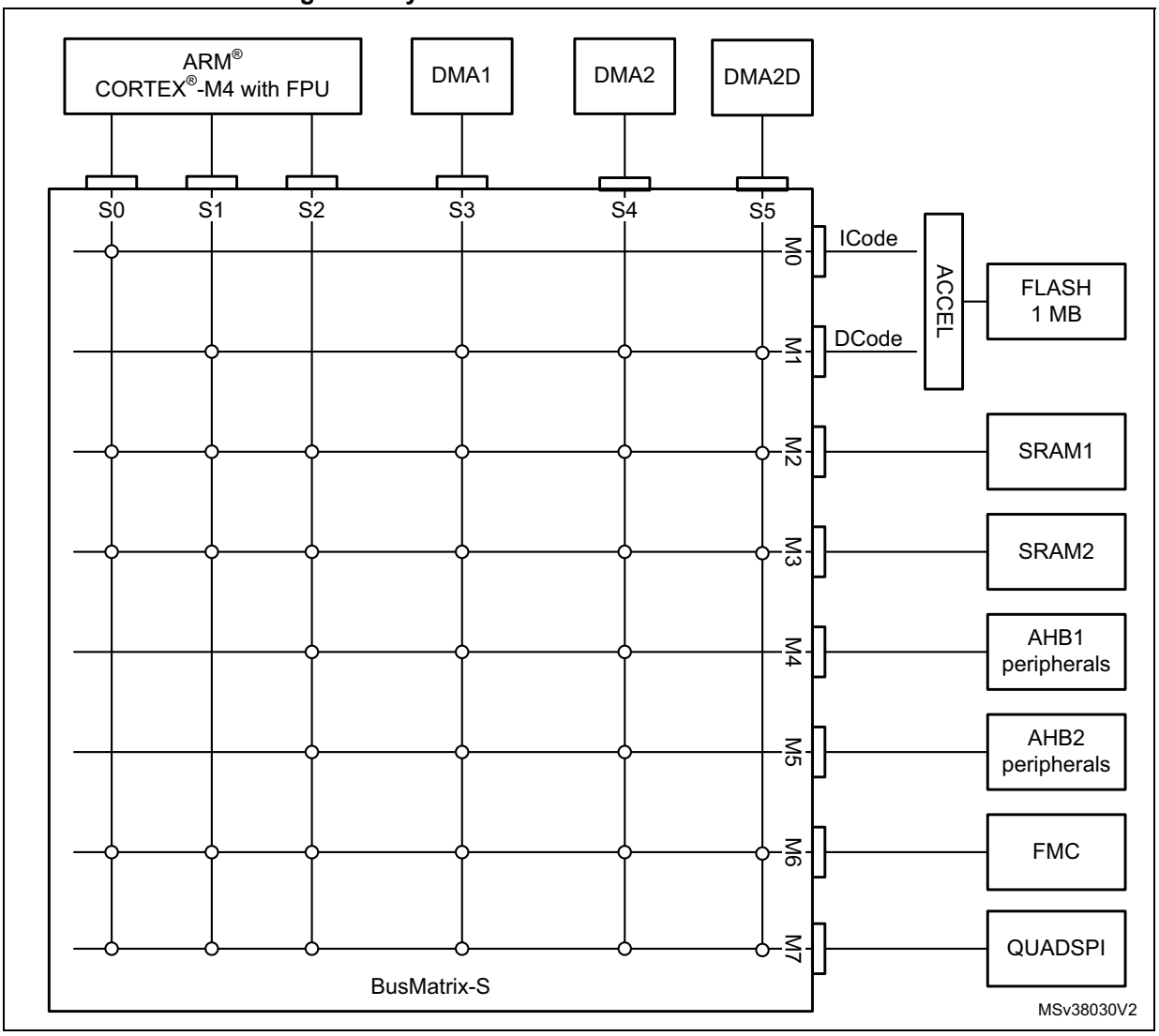

2.1.1 S0: I-bus

This bus connects the instruction bus of the Cortex®-M4 core to the BusMatrix. This bus is used by the core to fetch instructions. The targets of this bus are the internal Flash memory, SRAM1, SRAM2 and external memories through QUADSPI or the FMC.

2.1.2 S1: D-bus

This bus connects the data bus of the Cortex®-M4 core to the BusMatrix. This bus is used by the core for literal load and debug access. The targets of this bus are the internal Flash memory, SRAM1, SRAM2 and external memories through QUADSPI or the FMC.

2.1.3 S2: S-bus

This bus connects the system bus of the Cortex®-M4 core to the BusMatrix. This bus is used by the core to access data located in a peripheral or SRAM area. The targets of this

bus are the SRAM1, the AHB1 peripherals including the APB1 and APB2 peripherals, the AHB2 peripherals and the external memories through the QUADSPI or the FMC.

On STM32L49x/L4Ax devices, the SRAM2 is also accessible on this bus to allow continuous mapping with SRAM1.

2.1.4 S3, S4: DMA-bus

This bus connects the AHB master interface of the DMA to the BusMatrix.The targets of this bus are the SRAM1 and SRAM2, the AHB1 peripherals including the APB1 and APB2 peripherals, the AHB2 peripherals and the external memories through the QUADSPI or the FMC.

2.1.5 S5: DMA2D-bus[a]

This bus connects the AHB master interface of the DMA2D to the BusMatrix. The targets of this bus are the SRAM1 and SRAM2 and external memories through the QUADSPI or the FMC.

2.1.6 BusMatrix

The BusMatrix manages the access arbitration between masters. The arbitration uses a Round Robin algorithm. The BusMatrix is composed of up to six masters (CPU AHB, system bus, DCode bus, ICode bus, DMA1, DMA2 and DMA2D bus) and up to eight slaves (FLASH, SRAM1, SRAM2, AHB1 (including APB1 and APB2), AHB2, QUADSPI and FMC).

AHB/APB bridges

The two AHB/APB bridges provide full synchronous connections between the AHB and the two APB buses, allowing flexible selection of the peripheral frequency.

Refer to *Section 2.2: Memory organization on page 75* for the address mapping of the peripherals connected to this bridge.

After each device reset, all peripheral clocks are disabled (except for the SRAM1/2 and Flash memory interface). Before using a peripheral you have to enable its clock in the RCC_AHBxENR and the RCC_APBxENR registers.

Note: When a 16- or 8-bit access is performed on an APB register, the access is transformed into a 32-bit access: the bridge duplicates the 16- or 8-bit data to feed the 32-bit vector.

a. it is present on L496/L4A6 only

2.2 Memory organization

2.2.1 Introduction

Program memory, data memory, registers and I/O ports are organized within the same linear 4-Gbyte address space.

The bytes are coded in memory in Little Endian format. The lowest numbered byte in a word is considered the word's least significant byte and the highest numbered byte the most significant.

The addressable memory space is divided into eight main blocks, of 512 Mbytes each.

2.2.2 Memory map and register boundary addresses

Figure 3. Memory map for STM32L47x/L48x devices

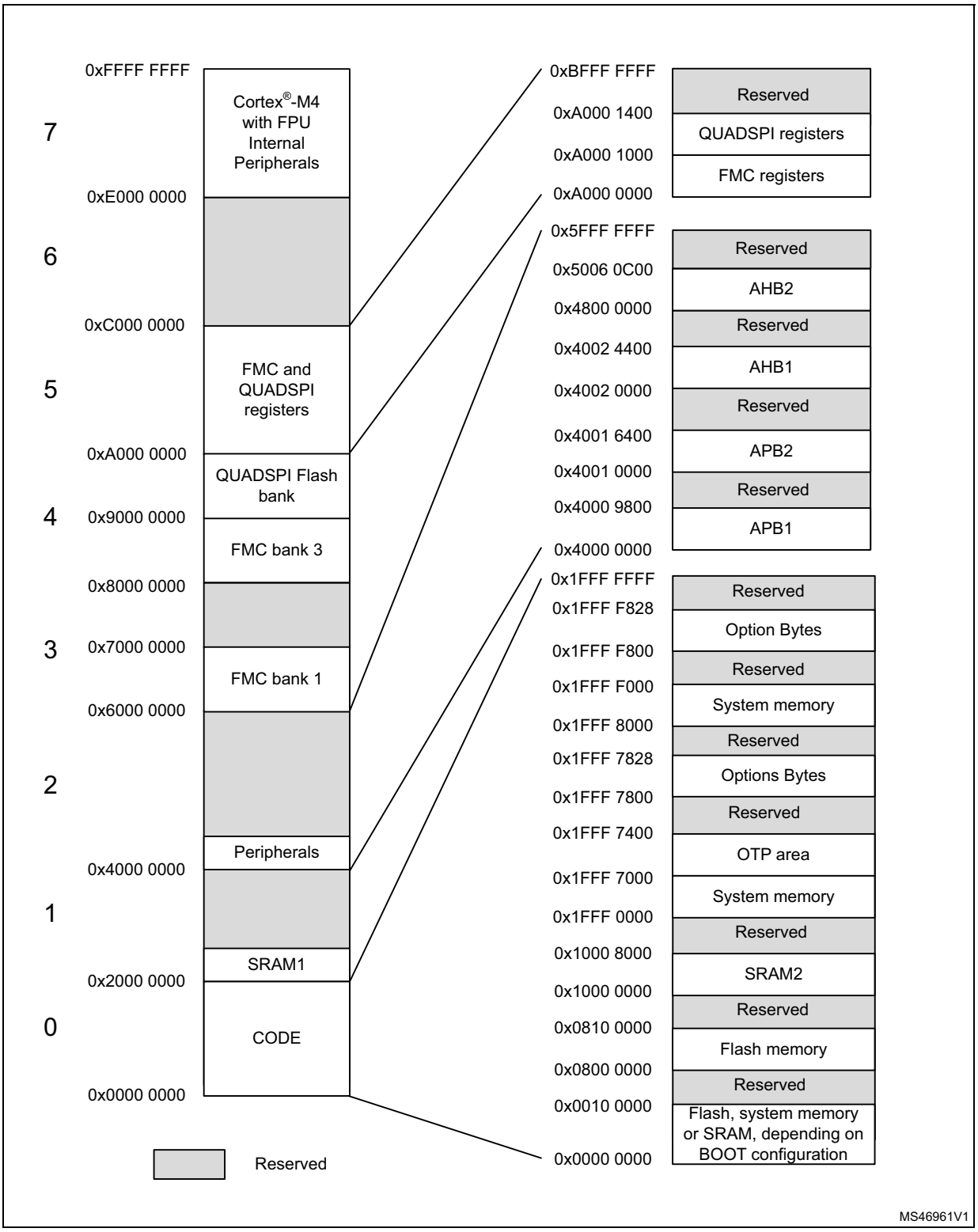

Figure 4. Memory map for STM32L49x/L4Ax devices

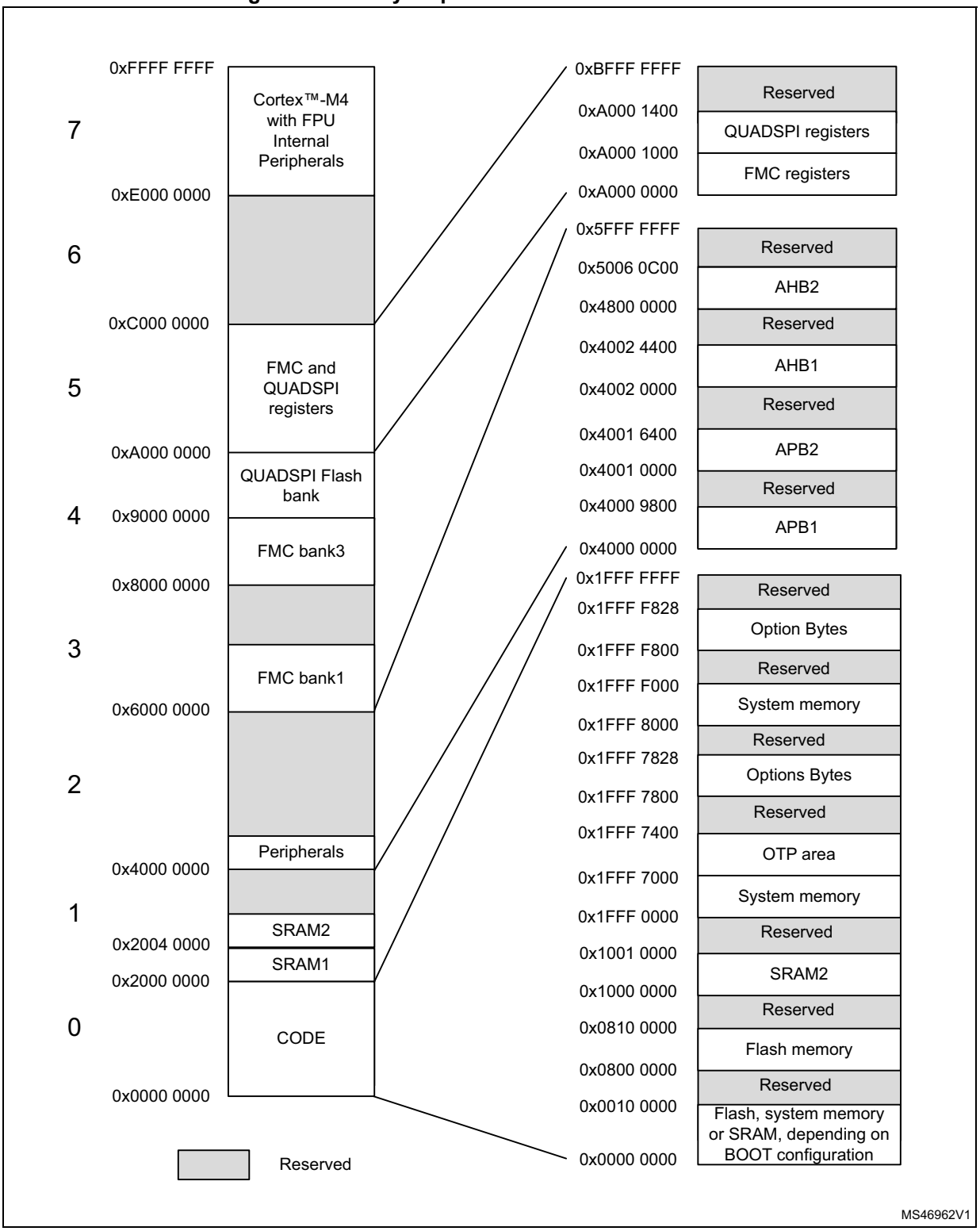

It is forbidden to access QUADSPI Flash bank area before having properly configured and enabled the QUADSPI peripheral.

All the memory map areas that are not allocated to on-chip memories and peripherals are considered “Reserved”. For the detailed mapping of available memory and register areas, refer to the following table.

The following table gives the boundary addresses of the peripherals available in the devices.

Table 1. STM32L47x/L48x devices memory map and peripheral register boundary addresses(1)

Bus	Boundary address	Size (bytes)	Peripheral	Peripheral register map
AHB2	0x5006 0800 - 0x5006 0BFF	1 KB	RNG	*Section 27.7.4: RNG register map*
	0x5006 0400 - 0x5006 07FF	1 KB	Reserved	-
	0x5006 0000 - 0x5006 03FF	1 KB	AES(2)	*Section 28.7.18: AES register map*
	0x5004 0400 - 0x5005 FFFF	127 KB	Reserved	-
	0x5004 0000 - 0x5004 03FF	1 KB	ADC	*Section 18.8: ADC register map*
	0x5000 0000 - 0x5003 FFFF	256 KB	OTG_FS(3)	*Section 47.15.57: OTG_FS register map*
	0x4800 2000 - 0x4FFF FFFF	~127 MB	Reserved	-
	0x4800 1C00 - 0x4800 1FFF	1 KB	GPIOH	*Section 8.5.13: GPIO register map*
	0x4800 1800 - 0x4800 1BFF	1 KB	GPIOG	*Section 8.5.13: GPIO register map*
	0x4800 1400 - 0x4800 17FF	1 KB	GPIOF	*Section 8.5.13: GPIO register map*
	0x4800 1000 - 0x4800 13FF	1 KB	GPIOE	*Section 8.5.13: GPIO register map*
	0x4800 0C00 - 0x4800 0FFF	1 KB	GPIOD	*Section 8.5.13: GPIO register map*
	0x4800 0800 - 0x4800 0BFF	1 KB	GPIOC	*Section 8.5.13: GPIO register map*
	0x4800 0400 - 0x4800 07FF	1 KB	GPIOB	*Section 8.5.13: GPIO register map*
	0x4800 0000 - 0x4800 03FF	1 KB	GPIOA	*Section 8.5.13: GPIO register map*
	0x4002 4400 - 0x47FF FFFF	~127 MB	Reserved	-

Table 1. STM32L47x/L48x devices memory map and peripheral register boundary addresses(1) (continued)

Bus	Boundary address	Size (bytes)	Peripheral	Peripheral register map
AHB1	0x4002 4000 - 0x4002 43FF	1 KB	TSC	*Section 26.6.11: TSC register map*
	0x4002 3400 - 0x4002 3FFF	3 KB	Reserved	-
	0x4002 3000 - 0x4002 33FF	1 KB	CRC	*Section 15.4.6: CRC register map*
	0x4002 2400 - 0x4002 2FFF	3 KB	Reserved	-
	0x4002 2000 - 0x4002 23FF	1 KB	FLASH registers	*Section 3.7.17: FLASH register map*
	0x4002 1400 - 0x4002 1FFF	3 KB	Reserved	-
	0x4002 1000 - 0x4002 13FF	1 KB	RCC	*Section 6.4.33: RCC register map*
	0x4002 0800 - 0x4002 0FFF	2 KB	Reserved	-
	0x4002 0400 - 0x4002 07FF	1 KB	DMA2	*Section 11.6.8: DMA register map*
	0x4002 0000 - 0x4002 03FF	1 KB	DMA1	*Section 11.6.8: DMA register map*
APB2	0x4001 6400 - 0x4001 FFFF	39 KB	Reserved	-
	0x4001 6000 - 0x4001 63FF	1 KB	DFSDM1	*Section 24.8.16: DFSDM register map*
	0x4001 5C00 - 0x4001 5FFF	1 KB	Reserved	-
	0x4001 5800 - 0x4001 5BFF	1 KB	SAI2	*Section 43.5.18: SAI register map*
	0x4001 5400 - 0x4001 57FF	1 KB	SAI1	*Section 43.5.18: SAI register map*
	0x4001 4C00 - 0x4001 53FF	2 KB	Reserved	-

Table 1. STM32L47x/L48x devices memory map and peripheral register boundary addresses(1) (continued)

Bus	Boundary address	Size (bytes)	Peripheral	Peripheral register map
APB2	0x4001 4800 - 0x4001 4BFF	1 KB	TIM17	*Section 32.7.21: TIM16/TIM17 register map*
	0x4001 4400 - 0x4001 47FF	1 KB	TIM16	*Section 32.7.21: TIM16/TIM17 register map*
	0x4001 4000 - 0x4001 43FF	1 KB	TIM15	*Section 32.7.21: TIM16/TIM17 register map*
	0x4001 3C00 - 0x4001 3FFF	1 KB	Reserved	-
	0x4001 3800 - 0x4001 3BFF	1 KB	USART1	*Section 40.8.12: USART register map*
	0x4001 3400 - 0x4001 37FF	1 KB	TIM8	*Section 30.4.33: TIM8 register map*
	0x4001 3000 - 0x4001 33FF	1 KB	SPI1	*Section 42.6.8: SPI register map*
	0x4001 2C00 - 0x4001 2FFF	1 KB	TIM1	*Section 30.4.32: TIM1 register map*
	0x4001 2800 - 0x4001 2BFF	1 KB	SDMMC1	*Section 45.8.16: SDMMC register map*
	0x4001 2000 - 0x4001 27FF	2 KB	Reserved	-
	0x4001 1C00 - 0x4001 1FFF	1 KB	FIREWALL	*Section 4.4.8: Firewall register map*
	0x4001 0800- 0x4001 1BFF	5 KB	Reserved	-
	0x4001 0400 - 0x4001 07FF	1 KB	EXTI	*Section 14.5.13: EXTI register map*
	0x4001 0200 - 0x4001 03FF	1 KB	COMP	*Section 22.6.3: COMP register map*
	0x4001 0030 - 0x4001 01FF		VREFBUF	*Section 21.4.3: VREFBUF register map*
	0x4001 0000 - 0x4001 002F		SYSCFG	*Section 9.2.12: SYSCFG register map*

Table 1. STM32L47x/L48x devices memory map and peripheral register boundary addresses(1) (continued)

Bus	Boundary address	Size (bytes)	Peripheral	Peripheral register map
APB1	0x4000 9800 - 0x4000 FFFF	26 KB	Reserved	-
	0x4000 9400 - 0x4000 97FF	1 KB	LPTIM2	*Section 34.7.11: LPTIM register map*
	0x4000 8C00 - 0x4000 93FF	2 KB	Reserved	-
	0x4000 8800 - 0x4000 8BFF	1 KB	SWPMI1	*Section 44.6.10: SWPMI register map and reset value table*
	0x4000 8400 - 0x4000 87FF	1 KB	Reserved	-
	0x4000 8000 - 0x4000 83FF	1 KB	LPUART1	*Section 41.7.10: LPUART register map*
	0x4000 7C00 - 0x4000 7FFF	1 KB	LPTIM1	*Section 34.7.11: LPTIM register map*
	0x4000 7800 - 0x4000 7BFF	1 KB	OPAMP	*Section 23.5.7: OPAMP register map*
	0x4000 7400 - 0x4000 77FF	1 KB	DAC1	*Section 19.7.21: DAC register map*
	0x4000 7000 - 0x4000 73FF	1 KB	PWR	*Section 5.4.26: PWR register map and reset value table*
	0x4000 6800 - 0x4000 6FFF	2 KB	Reserved	-
	0x4000 6400 - 0x4000 67FF	1 KB	CAN1	*Section 46.9.5: bxCAN register map*
	0x4000 6000 - 0x4000 63FF	1 KB	Reserved	-
	0x4000 5C00- 0x4000 5FFF	1 KB	I2C3	*Section 39.7.12: I2C register map*
	0x4000 5800 - 0x4000 5BFF	1 KB	I2C2	*Section 39.7.12: I2C register map*
	0x4000 5400 - 0x4000 57FF	1 KB	I2C1	*Section 39.7.12: I2C register map*

Table 1. STM32L47x/L48x devices memory map and peripheral register boundary addresses(1) (continued)

Bus	Boundary address	Size (bytes)	Peripheral	Peripheral register map
APB1	0x4000 5000 - 0x4000 53FF	1 KB	UART5	*Section 40.8.12: USART register map*
	0x4000 4C00 - 0x4000 4FFF	1 KB	UART4	*Section 40.8.12: USART register map*
	0x4000 4800 - 0x4000 4BFF	1 KB	USART3	*Section 40.8.12: USART register map*
	0x4000 4400 - 0x4000 47FF	1 KB	USART2	*Section 40.8.12: USART register map*
	0x4000 4000 - 0x4000 43FF	1 KB	Reserved	-
	0x4000 3C00 - 0x4000 3FFF	1 KB	SPI3	*Section 42.6.8: SPI register map*
	0x4000 3800 - 0x4000 3BFF	1 KB	SPI2	*Section 42.6.8: SPI register map*
	0x4000 3400 - 0x4000 37FF	1 KB	Reserved	-
	0x4000 3000 - 0x4000 33FF	1 KB	IWDG	*Section 36.4.6: IWDG register map*
	0x4000 2C00 - 0x4000 2FFF	1 KB	WWDG	*Section 37.5.4: WWDG register map*
	0x4000 2800 - 0x4000 2BFF	1 KB	RTC	*Section 38.6.21: RTC register map*
	0x4000 2400 - 0x4000 27FF	1 KB	LCD(4)	*Section 25.6.6: LCD register map*
	0x4000 1800 - 0x4000 2400	3 KB	Reserved	-
	0x4000 1400 - 0x4000 17FF	1 KB	TIM7	*Section 33.4.9: TIMx register map*
	0x4000 1000 - 0x4000 13FF	1 KB	TIM6	*Section 33.4.9: TIMx register map*
	0x4000 0C00- 0x4000 0FFF	1 KB	TIM5	*Section 31.4.26: TIMx register map*
	0x4000 0800 - 0x4000 0BFF	1 KB	TIM4	*Section 31.4.26: TIMx register map*
	0x4000 0400 - 0x4000 07FF	1 KB	TIM3	*Section 31.4.26: TIMx register map*
	0x4000 0000 - 0x4000 03FF	1 KB	TIM2	*Section 31.4.26: TIMx register map*

1. The gray color is used for reserved boundary addresses.
2. Available on STM32L48x devices only.
3. Available on STM32L4x5/L4x6 devices only.
4. Available on STM32L4x6 devices only.

Table 2. STM32L49x/L4Ax devices memory map and peripheral register boundary addresses(1)

Bus	Boundary address	Size (bytes)	Peripheral	Peripheral register map
AHB4	0xA000 1000 - 0xA000 13FF	1 KB	QUADSPI	*Section 17.6.14: QUADSPI register map*
AHB3	0xA000 0400 - 0xA000 0FFF	3 KB	Reserved	-
	0xA000 0000 - 0xA000 03FF	1 KB	FMC	*Section 16.7.8: FMC register map*
-	0x5006 0C00 - 0x5FFF FFFF	~260 MB	Reserved	-
AHB2	0x5006 0800 - 0x5006 0BFF	1 KB	RNG	*Section 27.7.4: RNG register map*
	0x5006 0400 - 0x5006 07FF	1 KB	HASH	*Section 29.7.8: HASH register map*
	0x5006 0000 - 0x5006 03FF	1 KB	AES(2)	*Section 28.7.18: AES register map*
	0x5005 0400 - 0x5005 FFFF	63 KB	Reserved	-
	0x5005 0000 - 0x5005 03FF	1 KB	DCMI	*Section 20.5.12: DCMI register map*
	0x5004 0400 - 0x5004 FFFF	63 KB	Reserved	-
	0x5004 0000 - 0x5004 03FF	1 KB	ADC	*Section 18.8: ADC register map*
	0x5000 0000 - 0x5003 FFFF	256 KB	OTG_FS	*Section 47.15.57: OTG_FS register map*
	0x4800 2400 - 0x4FFF FFFF	~127 MB	Reserved	-
	0x4800 2000 - 0x4800 23FF	1 KB	GPIOI	*Section 8.5.13: GPIO register map*
	0x4800 1C00 - 0x4800 1FFF	1 KB	GPIOH	*Section 8.5.13: GPIO register map*
	0x4800 1800 - 0x4800 1BFF	1 KB	GPIOG	*Section 8.5.13: GPIO register map*
	0x4800 1400 - 0x4800 17FF	1 KB	GPIOF	*Section 8.5.13: GPIO register map*
	0x4800 1000 - 0x4800 13FF	1 KB	GPIOE	*Section 8.5.13: GPIO register map*
	0x4800 0C00 - 0x4800 0FFF	1 KB	GPIOD	*Section 8.5.13: GPIO register map*
	0x4800 0800 - 0x4800 0BFF	1 KB	GPIOC	*Section 8.5.13: GPIO register map*
	0x4800 0400 - 0x4800 07FF	1 KB	GPIOB	*Section 8.5.13: GPIO register map*
	0x4800 0000 - 0x4800 03FF	1 KB	GPIOA	*Section 8.5.13: GPIO register map*
-	0x4002 BC00 - 0x47FF FFFF	~127 MB	Reserved	-

Table 2. STM32L49x/L4Ax devices memory map and peripheral register boundary addresses(1) (continued)

Bus	Boundary address	Size (bytes)	Peripheral	Peripheral register map
AHB1	0x4002 B000 - 0x4002 BBFF	3 KB	DMA2D	*Section 12.5.23: DMA2D register map*
	0x4002 4400 - 0x4002 AFFF	27 KB	Reserved	-
	0x4002 4000 - 0x4002 43FF	1 KB	TSC	*Section 26.6.11: TSC register map*
	0x4002 3400 - 0x4002 3FFF	1 KB	Reserved	-
	0x4002 3000 - 0x4002 33FF	1 KB	CRC	*Section 15.4.6: CRC register map*
	0x4002 2400 - 0x4002 2FFF	3 KB	Reserved	-
	0x4002 2000 - 0x4002 23FF	1 KB	FLASH registers	*Section 3.7.17: FLASH register map*
	0x4002 1400 - 0x4002 1FFF	3 KB	Reserved	-
	0x4002 1000 - 0x4002 13FF	1 KB	RCC	*Section 6.4.33: RCC register map*
	0x4002 0800 - 0x4002 0FFF	2 KB	Reserved	-
	0x4002 0400 - 0x4002 07FF	1 KB	DMA2	*Section 11.6.8: DMA register map*
	0x4002 0000 - 0x4002 03FF	1 KB	DMA1	*Section 11.6.8: DMA register map*
APB2	0x4001 6400 - 0x4001 FFFF	39 KB	Reserved	-
	0x4001 6000 - 0x4001 63FF	1 KB	DFSDM1	*Section 24.8.16: DFSDM register map*
	0x4001 5C00 - 0x4001 5FFF	1 KB	Reserved	-
	0x4001 5800 - 0x4001 5BFF	1 KB	SAI2	*Section 43.5: SAI registers*
	0x4001 5400 - 0x4001 57FF	1 KB	SAI1	*Section 43.5: SAI registers*
	0x4001 4C00 - 0x4001 53FF	2 KB	Reserved	-
	0x4001 4800 - 0x4001 4BFF	1 KB	TIM17	*Section 32.7.21: TIM16/TIM17 register map*
	0x4001 4400 - 0x4001 47FF	1 KB	TIM16	*Section 32.7.21: TIM16/TIM17 register map*
	0x4001 4000 - 0x4001 43FF	1 KB	TIM15	*Section 32.6.21: TIM15 register map*
	0x4001 3C00 - 0x4001 3FFF	1 KB	Reserved	-
	0x4001 3800 - 0x4001 3BFF	1 KB	USART1	*Section 40.8.12: USART register map*
	0x4001 3400 - 0x4001 37FF	1 KB	TIM8	*Section 30.4.33: TIM8 register map*
	0x4001 3000 - 0x4001 33FF	1 KB	SPI1	*Section 42.6.8: SPI register map*
	0x4001 2C00 - 0x4001 2FFF	1 KB	TIM1	*Section 30.4.32: TIM1 register map*
	0x4001 2800 - 0x4001 2BFF	1 KB	SDMMC1	*Section 45.8.16: SDMMC register map*
	0x4001 2000 - 0x4001 27FF	2 KB	Reserved	-
	0x4001 1C00 - 0x4001 1FFF	1 KB	FIREWALL	*Section 4.4.8: Firewall register map*
	0x4001 0800- 0x4001 1BFF	5 KB	Reserved	-
	0x4001 0400 - 0x4001 07FF	1 KB	EXTI	*Section 14.5.13: EXTI register map*

Table 2. STM32L49x/L4Ax devices memory map and peripheral register boundary addresses(1) (continued)

Bus	Boundary address	Size (bytes)	Peripheral	Peripheral register map
APB2	0x4001 0200 - 0x4001 03FF	1 KB	COMP	*Section 22.6.3: COMP register map*
	0x4001 0030 - 0x4001 01FF		VREFBUF	*Section 21.4.3: VREFBUF register map*
	0x4001 0000 - 0x4001 002F		SYSCFG	*Section 9.2.12: SYSCFG register map*
APB1	0x4000 9800 - 0x4000 FFFF	26 KB	Reserved	-
	0x4000 9400 - 0x4000 97FF	1 KB	LPTIM2	*Section 34.7.11: LPTIM register map*
	0x4000 8C00 - 0x4000 93FF	2 KB	Reserved	-
	0x4000 8800 - 0x4000 8BFF	1 KB	SWPMI1	*Section 44.6.10: SWPMI register map and reset value table*
	0x4000 8400 - 0x4000 87FF	1 KB	I2C4	*Section 39.7.12: I2C register map*
	0x4000 8000 - 0x4000 83FF	1 KB	LPUART1	*Section 41.7.10: LPUART register map*
	0x4000 7C00 - 0x4000 7FFF	1 KB	LPTIM1	*Section 34.7.11: LPTIM register map*
	0x4000 7800 - 0x4000 7BFF	1 KB	OPAMP	*Section 23.5.7: OPAMP register map*
	0x4000 7400 - 0x4000 77FF	1 KB	DAC1	*Section 19.7.21: DAC register map*
	0x4000 7000 - 0x4000 73FF	1 KB	PWR	*Section 5.4.26: PWR register map and reset value table*
	0x4000 6C00 - 0x4000 6FFF	1 KB	Reserved	-
	0x4000 6800 - 0x4000 6BFF	1 KB	CAN2	*Section 46.9.5: bxCAN register map*
	0x4000 6400 - 0x4000 67FF	1 KB	CAN1	*Section 46.9.5: bxCAN register map*
	0x4000 6000 - 0x4000 63FF	1 KB	CRS	*Section 7.7.5: CRS register map*
	0x4000 5C00- 0x4000 5FFF	1 KB	I2C3	*Section 39.7.12: I2C register map*
	0x4000 5800 - 0x4000 5BFF	1 KB	I2C2	*Section 39.7.12: I2C register map*
	0x4000 5400 - 0x4000 57FF	1 KB	I2C1	*Section 39.7.12: I2C register map*
	0x4000 5000 - 0x4000 53FF	1 KB	UART5	*Section 40.8.12: USART register map*
	0x4000 4C00 - 0x4000 4FFF	1 KB	UART4	*Section 40.8.12: USART register map*

Table 2. STM32L49x/L4Ax devices memory map and peripheral register boundary addresses(1) (continued)

Bus	Boundary address	Size (bytes)	Peripheral	Peripheral register map
APB1	0x4000 4800 - 0x4000 4BFF	1 KB	USART3	*Section 40.8.12: USART register map*
	0x4000 4400 - 0x4000 47FF	1 KB	USART2	*Section 40.8.12: USART register map*
	0x4000 4000 - 0x4000 43FF	1 KB	Reserved	-
	0x4000 3C00 - 0x4000 3FFF	1 KB	SPI3	*Section 42.6.8: SPI register map*
	0x4000 3800 - 0x4000 3BFF	1 KB	SPI2	*Section 42.6.8: SPI register map*
	0x4000 3400 - 0x4000 37FF	1 KB	Reserved	-
	0x4000 3000 - 0x4000 33FF	1 KB	IWDG	*Section 36.4.6: IWDG register map*
	0x4000 2C00 - 0x4000 2FFF	1 KB	WWDG	*Section 37.5.4: WWDG register map*
	0x4000 2800 - 0x4000 2BFF	1 KB	RTC	*Section 38.6.21: RTC register map*
	0x4000 2400 - 0x4000 27FF	1 KB	LCD	*Section 25.6.6: LCD register map*
	0x4000 1800 - 0x4000 23FF	3 KB	Reserved	-
	0x4000 1400 - 0x4000 17FF	1 KB	TIM7	*Section 33.4.9: TIMx register map*
	0x4000 1000 - 0x4000 13FF	1 KB	TIM6	*Section 33.4.9: TIMx register map*
	0x4000 0C00- 0x4000 0FFF	1 KB	TIM5	*Section 31.4.26: TIMx register map*
	0x4000 0800 - 0x4000 0BFF	1 KB	TIM4	*Section 31.4.26: TIMx register map*
	0x4000 0400 - 0x4000 07FF	1 KB	TIM3	*Section 31.4.26: TIMx register map*
	0x4000 0000 - 0x4000 03FF	1 KB	TIM2	*Section 31.4.26: TIMx register map*

1. The gray color is used for reserved boundary addresses.
2. Available on STM32L4Ax only.

2.3 Bit banding

The Cortex®-M4 memory map includes two bit-band regions. These regions map each word in an alias region of memory to a bit in a bit-band region of memory. Writing to a word in the alias region has the same effect as a read-modify-write operation on the targeted bit in the bit-band region.

In the STM32L4x6 devices both the peripheral registers and the SRAM1 are mapped to a bit-band region, so that single bit-band write and read operations are allowed. The operations are only available for Cortex®-M4 accesses, and not from other bus masters (e.g. DMA).

A mapping formula shows how to reference each word in the alias region to a corresponding bit in the bit-band region. The mapping formula is:

bit_word_addr = *bit_band_base* + (*byte_offset* x 32) + (*bit_number* × 4)

where:

– *bit_word_addr* is the address of the word in the alias memory region that maps to the targeted bit
– *bit_band_base* is the starting address of the alias region
– *byte_offset* is the number of the byte in the bit-band region that contains the targeted bit
– *bit_number* is the bit position (0-7) of the targeted bit

Example

The following example shows how to map bit 2 of the byte located at SRAM1 address 0x20000300 to the alias region:

0x22006008 = 0x22000000 + (0x300*32) + (2*4)

Writing to address 0x22006008 has the same effect as a read-modify-write operation on bit 2 of the byte at SRAM1 address 0x20000300.

Reading address 0x22006008 returns the value (0x01 or 0x00) of bit 2 of the byte at SRAM1 address 0x20000300 (0x01: bit set; 0x00: bit reset).

For more information on bit-banding, refer to the *Cortex*®-M4 *programming manual* (see *Related documents on page 1*).

2.4 Embedded SRAM

The STM32L47x/L48x/L49x/L4Ax devices feature up to 320 Kbytes SRAM:

- 96 Kbytes SRAM1 and 32 Kbyte SRAM2 on STM32L47x/L48x.
- 256 Kbyte SRAM1 and 64 Kbyte SRAM2 on STM32L49x/L4Ax devices.

These SRAM can be accessed as bytes, half-words (16 bits) or full words (32 bits). These memories can be addressed at maximum system clock frequency without wait state and thus by both CPU and DMA.

The CPU can access the SRAM1 through the system bus or through the ICode/DCode buses when boot from SRAM1 is selected or when physical remap is selected (*Section 9.2.1: SYSCFG memory remap register (SYSCFG_MEMRMP)* in the SYSCFG controller). To get the maximum performance on SRAM1 execution, physical remap should be selected (boot or software selection).

Execution can be performed from SRAM2 with maximum performance without any remap thanks to access through ICode bus.

On STM32L49x/L4Ax devices, the SRAM2 is aliased at address 0x2004 0000, offering a continuous address space with the SRAM1.

2.4.1 SRAM2 parity check

The user can enable the SRAM2 parity check using the option bit SRAM2_PE in the user option byte (refer to *Section 3.4.1: Option bytes description*).

The data bus width is 36 bits because 4 bits are available for parity check (1 bit per byte) in order to increase memory robustness, as required for instance by Class B or SIL norms.

The parity bits are computed and stored when writing into the SRAM2. Then, they are automatically checked when reading. If one bit fails, an NMI is generated. The same error can also be linked to the BRK_IN Break input of TIM1/TIM8/TIM15/TIM16/TIM17, with the SPL control bit in the *SYSCFG configuration register 2 (SYSCFG_CFGR2)*. The SRAM2 Parity Error flag (SPF) is available in the *SYSCFG configuration register 2 (SYSCFG_CFGR2)*.

Note: When enabling the RAM parity check, it is advised to initialize by software the whole RAM memory at the beginning of the code, to avoid getting parity errors when reading non-initialized locations.

2.4.2 SRAM2 Write protection

The SRAM2 can be write protected with a page granularity of 1 Kbyte.

Table 3. SRAM2 organization

Page number	Start address	End address
Page 0	0x1000 0000	0x1000 03FF
Page 1	0x1000 0400	0x1000 07FF
Page 2	0x1000 0800	0x1000 0BFF
Page 3	0x1000 0C00	0x1000 0FFF
Page 4	0x1000 1000	0x1000 13FF
Page 5	0x1000 1400	0x1000 17FF
Page 6	0x1000 1800	0x1000 1BFF
Page 7	0x1000 1C00	0x1000 1FFF
Page 8	0x1000 2000	0x1000 23FF
Page 9	0x1000 2400	0x1000 27FF
Page 10	0x1000 2800	0x1000 2BFF
Page 11	0x1000 2C00	0x1000 2FFF
Page 12	0x1000 3000	0x1000 33FF
Page 13	0x1000 3400	0x1000 37FF
Page 14	0x1000 3800	0x1000 3BFF
Page 15	0x1000 3C00	0x1000 3FFF
Page 16	0x1000 4000	0x1000 43FF
Page 17	0x1000 4400	0x1000 47FF
Page 18	0x1000 4800	0x1000 4BFF
Page 19	0x1000 4C00	0x1000 4FFF
Page 20	0x1000 5000	0x1000 53FF
Page 21	0x1000 5400	0x1000 57FF
Page 22	0x1000 5800	0x1000 5BFF

Table 3. SRAM2 organization (continued)

Page number	Start address	End address
Page 23	0x1000 5C00	0x1000 5FFF
Page 24	0x1000 6000	0x1000 63FF
Page 25	0x1000 6400	0x1000 67FF
Page 26	0x1000 6800	0x1000 6BFF
Page 27	0x1000 6C00	0x1000 6FFF
Page 28	0x1000 7000	0x1000 73FF
Page 29	0x1000 7400	0x1000 77FF
Page 30	0x1000 7800	0x1000 7BFF
Page 31	0x1000 7C00	0x1000 7FFF
STM32L49x/L4Ax devices only		
Page 32	0x1000 8000	0x1000 83FF
Page 33	0x1000 8400	0x1000 87FF
Page 34	0x1000 8800	0x1000 8BFF
Page 35	0x1000 8C00	0x1000 8FFF
Page 36	0x1000 9000	0x1000 93FF
Page 37	0x1000 9400	0x1000 97FF
Page 38	0x1000 9800	0x1000 9BFF
Page 39	0x1000 9C00	0x1000 9FFF
Page 40	0x1000 A000	0x1000 A3FF
Page 41	0x1000 A400	0x1000 A7FF
Page 42	0x1000 A800	0x1000 ABFF
Page 43	0x1000 AC00	0x1000 AFFF
Page 44	0x1000 B000	0x1000 B3FF
Page 45	0x1000 B400	0x1000 B7FF
Page 46	0x1000 B800	0x1000 BBFF
Page 47	0x1000 BC00	0x1000 BFFF
Page 48	0x1000 C000	0x1000 C3FF
Page 49	0x1000 C400	0x1000 C7FF
Page 50	0x1000 C800	0x1000 CBFF
Page 51	0x1000 CC00	0x1000 CFFF
Page 52	0x1000 D000	0x1000 D3FF
Page 53	0x1000 D400	0x1000 D7FF
Page 54	0x1000 D800	0x1000 DBFF
Page 55	0x1000 DC00	0x1000 DFFF
Page 56	0x1000 E000	0x1000 E3FF

Table 3. SRAM2 organization (continued)

Page number	Start address	End address
Page 57	0x1000 E400	0x1000 E7FF
Page 58	0x1000 E800	0x1000 EBFF
Page 59	0x1000 EC00	0x1000 EFFF
Page 60	0x1000 F000	0x1000 F3FF
Page 61	0x1000 F400	0x1000 F7FF
Page 62	0x1000 F800	0x1000 FBFF
Page 63	0x1000 FC00	0x1000 FFFF

The write protection can be enabled in *SYSCFG SRAM2 write protection register (SYSCFG_SWPR)* in the SYSCFG block. This is a register with write '1' once mechanism, which means by writing '1' on a bit it will setup the write protection for that page of SRAM and it can be removed/cleared by a system reset only.

2.4.3 SRAM2 Read protection

The SRAM2 is protected with the Read protection (RDP). Refer to *Section 3.5.1: Read protection (RDP)* for more details.

2.4.4 SRAM2 Erase

The SRAM2 can be erased with a system reset using the option bit SRAM2_RST in the user option byte (refer to *Section 3.4.1: Option bytes description*).

The SRAM2 erase can also be requested by software by setting the bit SRAM2ER in the *SYSCFG SRAM2 control and status register (SYSCFG_SCSR)*.

2.5 Flash memory overview

The Flash memory is composed of two distinct physical areas:

- The main Flash memory block. It contains the application program and user data if necessary.
- The information block. It is composed of three parts:
  - Option bytes for hardware and memory protection user configuration.
  - System memory that contains the ST proprietary code.
  - OTP (one-time programmable) area

The Flash interface implements instruction access and data access based on the AHB protocol. It also implements the logic necessary to carry out the Flash memory operations (program/erase) controlled through the Flash registers Refer to *Section 3: Embedded Flash memory (FLASH)* for more details.

2.6 Boot configuration

2.6.1 Boot configuration for STM32L47x/L48x devices

In the STM32L47x/L48x devices, three different boot modes can be selected through the BOOT0 pin and nBOOT1 bit in the User option byte, as shown in the following table.

Table 4. Boot modes

Boot mode selection		Boot mode	Aliasing
BOOT1[(1)]	BOOT0		
x	0	Main Flash memory	Main Flash memory is selected as boot area
0	1	System memory	System memory is selected as boot area
1	1	Embedded SRAM1	Embedded SRAM1 is selected as boot area

1. The BOOT1 value is the opposite of the nBOOT1 Option Bit.

The values on both BOOT0 pin and nBOOT1 bit are latched after a reset. It is up to the user to set nBOOT1 and BOOT0 to select the required boot mode.

The BOOT0 pin and nBOOT1 bit are also re-sampled when exiting from Standby mode. Consequently they must be kept in the required Boot mode configuration in Standby mode. After this startup delay has elapsed, the CPU fetches the top-of-stack value from address 0x0000 0000, then starts code execution from the boot memory at 0x0000 0004.

Depending on the selected boot mode, main Flash memory, system memory or SRAM1 is accessible as follows:

- Boot from main Flash memory: the main Flash memory is aliased in the boot memory space (0x0000 0000), but still accessible from its original memory space (0x0800 0000). In other words, the Flash memory contents can be accessed starting from address 0x0000 0000 or 0x0800 0000.
- Boot from system memory: the system memory is aliased in the boot memory space (0x0000 0000), but still accessible from its original memory space (0x1FFF 0000).
- Boot from the embedded SRAM1: the SRAM1 is aliased in the boot memory space (0x0000 0000), but it is still accessible from its original memory space (0x2000 0000).

Note: When the device boots from SRAM, in the application initialization code, you have to relocate the vector table in SRAM using the NVIC exception table and the offset register.

When booting from the main Flash memory, the application software can either boot from bank 1 or from bank 2. By default, boot from bank 1 is selected.

To select boot from Flash memory bank 2, set the BFB2 bit in the user option bytes. When this bit is set and the boot pins are in the “boot from main Flash memory” configuration, the device boots from system memory, and the boot loader jumps to execute the user application programmed in Flash memory bank 2. The system memory remains aliased to the boot memory space (0x0000 0000). For further details, please refer to AN2606.

Note: When booting from bank 2, the boot loader will swap the Flash memory banks. Consequently, in the application initialization code, you have to relocate the vector table to bank 2 swapped base address (0x0800 0000) using the NVIC exception table and offset register.

Physical remap

Once the boot pins are selected, the application software can modify the memory accessible in the code area (in this way the code can be executed through the ICode bus in place of the System bus). This modification is performed by programming the *SYSCFG memory remap register (SYSCFG_MEMRMP)* in the SYSCFG controller.

The following memories can thus be remapped:

- Main Flash memory
- System memory
- Embedded SRAM1 (96 KB)
- FSMC bank 1 (NOR/PSRAM 1 and 2)
- Quad-SPI memory

Table 5. Memory mapping versus boot mode/physical remap

Addresses	Boot/remap in main Flash memory	Boot/remap in embedded SRAM 1	Boot/remap in system memory	Remap in FSMC	Remap in QUADSPI
0x2000 0000 - 0x2001 7FFF	SRAM1	SRAM1	SRAM1	SRAM1	SRAM1
0x1FFF 0000 - 0x1FFF FFFF	System memory/OTP/ Options bytes	System memory/OTP/ Options bytes	System memory/OTP/ Options bytes	System memory/OTP/ Options bytes	System memory/OTP/ Options bytes
0x1000 8000 - 0x1FFE FFFF	Reserved	Reserved	Reserved	Reserved	Reserved
0x1000 0000 - 0x1000 7FFF	SRAM2	SRAM2	SRAM2	SRAM2	SRAM2
0x0810 0000 - 0x0FFF FFFF	Reserved	Reserved	Reserved	Reserved	Reserved
0x0800 0000 - 0x080F FFFF	Flash memory	Flash memory	Flash memory	Flash memory	Flash memory
0x0400 0000 - 0x07FF FFFF	Reserved	Reserved	Reserved	FSMC bank 1 NOR/ PSRAM 2 (128 MB) Aliased	QUADSPI bank (128 MB) Aliased
0x0010 0000 - 0x03FF FFFF	Reserved	Reserved	Reserved	FSMC bank 1 NOR/ PSRAM 1 (128 MB) Aliased	QUADSPI bank (128 MB) Aliased
0x0000 0000 - 0x000F FFFF (1) (2)	Flash (1 MB) Aliased	SRAM1 (96 KB) Aliased	System memory (28 KB) Aliased	FSMC bank 1 NOR/ PSRAM 1 (128 MB) Aliased)	QUADSPI bank (128 MB) Aliased

1. When the FSMC is remapped at address 0x0000 0000, only the first two regions of bank 1 memory controller (bank 1 NOR/PSRAM 1 and NOR/PSRAM 2) can be remapped. When the QUADSPI is remapped at address 0x0000 0000, only 128 MB are remapped. In remap mode, the CPU can access the external memory via ICode bus instead of system bus, which boosts up the performance.
2. Even when aliased in the boot memory space, the related memory is still accessible at its original memory space.

Embedded boot loader

The embedded boot loader is located in the System memory, programmed by ST during production. Refer to AN2606 STM32 microcontroller system memory boot mode.

2.6.2 Boot configuration for STM32L49x/L4Ax devices

In the STM32L49x/L4Ax devices, three different boot modes can be selected through the BOOT0 pin or the nBOOT0 bit into the FLASH_OPTR register (if the nSWBOOT0 bit is cleared into the FLASH_OPTR register), and nBOOT1 bit in FLASH_OPTR register, as shown in the following table.

Table 6. Boot modes

nBOOT1 FLASH_OPTR[23]	nBOOT0 FLASH_OPTR[27]	BOOT0 pin PH3	nSWBOOT0 FLASH_OPTR[26]	Boot Memory Space Alias
X	X	0	1	Main Flash memory is selected as boot area(1)
X	1	X	0	Main Flash memory is selected as boot area(2)
0	X	1	1	Embedded SRAM1 is selected as boot area
0	0	X	0	Embedded SRAM1 is selected as boot area
1	X	1	1	System memory is selected as boot area
1	0	X	0	System memory is selected as boot area

1. Empty flash will be handled by the bootloader.
2. Empty flash will generate a hard fault.

The values on both BOOT0 pin (coming from the pin or the option bit) and nBOOT1 bit are latched upon reset release. It is up to the user to set nBOOT1 and BOOT0 to select the required boot mode.

The BOOT0 pin or user option bit (depending on the nSWBOOT0 bit value in the FLASH_OPTR register), and nBOOT1 bit are also re-sampled when exiting from Standby mode. Consequently, they must be kept in the required Boot mode configuration in Standby mode. After this startup delay has elapsed, the CPU fetches the top-of-stack value from address 0x0000 0000, then starts code execution from the boot memory at 0x0000 0004.

Depending on the selected boot mode, main Flash memory, system memory or SRAM1 is accessible as follows:

- Boot from main Flash memory: the main Flash memory is aliased in the boot memory space (0x0000 0000), but still accessible from its original memory space

(0x0800 0000). In other words, the Flash memory contents can be accessed starting from address 0x0000 0000 or 0x0800 0000.

- Boot from system memory: the system memory is aliased in the boot memory space (0x0000 0000), but still accessible from its original memory space (0x1FFF 0000).
- Boot from the embedded SRAM1: the SRAM1 is aliased in the boot memory space (0x0000 0000), but it is still accessible from its original memory space (0x2000 0000).

PH3/BOOT0 GPIO is configured in:

- Input mode during the complete reset phase if the option bit nSWBOOT0 is set into the FLASH_OPTR register and then switches automatically in analog mode after reset is released (BOOT0 pin).
- Input mode from the reset phase to the completion of the option byte loading if the bit nSWBOOT0 is cleared into the FLASH_OPTR register (BOOT0 value coming from the option bit). It switches then automatically to the analog mode even if the reset phase is not complete.

Note: When the device boots from SRAM, in the application initialization code, you have to relocate the vector table in SRAM using the NVIC exception table and the offset register.

When booting from the main Flash memory, the application software can either boot from bank 1 or from bank 2. By default, boot from bank 1 is selected.
To select boot from Flash memory bank 2, set the BFB2 bit in the user option bytes. When this bit is set and the boot pins are in the boot from main Flash memory configuration, the device boots from system memory, and the boot loader jumps to execute the user application programmed in Flash memory bank 2. For further details, please refer to AN2606.

Physical remap

Once the boot pins mode is selected, the application software can modify the memory accessible in the code area (in this way the code can be executed through the ICode bus in place of the System bus). This modification is performed by programming the *SYSCFG memory remap register (SYSCFG_MEMRMP)* in the SYSCFG controller.
The following memories can thus be remapped:

- Main Flash memory
- System memory
- Embedded SRAM1 (256 KB)
- FSMC bank 1 (NOR/PSRAM 1 and 2)
- QUADSPI memory

Table 7. Memory mapping versus boot mode/physical remap

Addresses	Boot/remap in main Flash memory	Boot/remap in embedded SRAM 1	Boot/remap in system memory	Remap in FSMC	Remap in QUADSPI
0x2000 0000 - 0x2003 FFFF	SRAM1	SRAM1	SRAM1	SRAM1	SRAM1
0x1FFF 0000 - 0x1FFF FFFF	System memory/OTP/ Options bytes	System memory/OTP/ Options bytes	System memory/OTP/ Options bytes	System memory/OTP/ Options bytes	System memory/OTP/ Options bytes
0x1000 8000 - 0x1FFE FFFF	Reserved	Reserved	Reserved	Reserved	Reserved

Table 7. Memory mapping versus boot mode/physical remap (continued)

Addresses	Boot/remap in main Flash memory	Boot/remap in embedded SRAM 1	Boot/remap in system memory	Remap in FSMC	Remap in QUADSPI
0x1000 0000 - 0x1000 FFFF	SRAM2	SRAM2	SRAM2	SRAM2	SRAM2
0x0810 0000 - 0x0FFF FFFF	Reserved	Reserved	Reserved	Reserved	Reserved
0x0800 0000 - 0x080F FFFF	Flash memory	Flash memory	Flash memory	Flash memory	Flash memory
0x0400 0000 - 0x07FF FFFF	Reserved	Reserved	Reserved	FSMC bank 1 NOR/ PSRAM 2 (128 MB) Aliased	QUADSPI bank (128 MB) Aliased
0x0010 0000 - 0x03FF FFFF	Reserved	Reserved	Reserved	FSMC bank 1 NOR/ PSRAM 1 (128 MB) Aliased	QUADSPI bank (128 MB) Aliased
0x0000 0000 - 0x000F FFFF (1) (2)	Flash (1 MB) Aliased	SRAM1 (256 KB) Aliased	System memory (28 KB) Aliased	FSMC bank 1 NOR/ PSRAM 1 (128 MB) Aliased)	QUADSPI bank (128 MB) Aliased)

1. When the FSMC is remapped at address 0x0000 0000, only the first two regions of bank 1 memory controller (bank 1 NOR/PSRAM 1 and NOR/PSRAM 2) can be remapped. When the QUADSPI is remapped at address 0x0000 0000, only 128 MB are remapped. In remap mode, the CPU can access the external memory via ICode bus instead of system bus, which boosts up the performance.
2. Even when aliased in the boot memory space, the related memory is still accessible at its original memory space.

Embedded boot loader

The embedded boot loader is located in the system memory, programmed by ST during production. Refer to AN2606 STM32 microcontroller system memory boot mode.

3 Embedded Flash memory (FLASH)

3.1 Introduction

The Flash memory interface manages CPU AHB ICode and DCode accesses to the Flash memory. It implements the erase and program Flash memory operations and the read and write protection mechanisms.

The Flash memory interface accelerates code execution with a system of instruction prefetch and cache lines.

3.2 FLASH main features

- Up to 1 Mbyte of Flash memory with dual bank architecture supporting read-while-write capability (RWW).
- Memory organization: 2 banks (Bank 1 and Bank 2)
  - main memory: 512 Kbyte per bank
  - information block: 32 Kbyte per bank
- 72-bit wide data read (64 bits plus 8 ECC bits)
- 72-bit wide data write (64 bits plus 8 ECC bits)
- Page erase (2 Kbyte), bank erase and mass erase (both banks)

Flash memory interface features:

- Flash memory read operations
- Flash memory program/erase operations
- Read protection activated by option (RDP)
- 4 Write protection areas (2 per bank) selected by option (WRP)
- 2 proprietary code read protection areas (1 per bank) selected by option (PCROP)
- Prefetch on ICODE
- Instruction Cache: 32 cache lines of 4 x 64 bits on ICode (1 KB RAM)
- Data Cache: 8 cache lines of 4 x 64 bits on DCode (256B RAM)
- Error Code Correction (ECC): 8 bits for 64-bit double-word
- Option byte loader
- Low-power mode

3.3 FLASH functional description

3.3.1 Flash memory organization

The Flash memory is organized as 72-bit wide memory cells (64 bits plus 8 ECC bits) that can be used for storing both code and data constants.

The Flash memory is divided in two banks. Each bank is organized as follows:

- A main memory block containing 256 pages of 2 Kbyte. Each page is made of 8 rows of 256 bytes.
- An Information block containing:
  - System memory from which the device boots in System memory boot mode. The area is reserved for use by STMicroelectronics and contains the boot loader that is used to reprogram the Flash memory through one of the following interfaces: USART1, USART2, USART3, USB (DFU), I2C1, I2C2, I2C3, SPI1, SPI2, SPI3. It is programmed by STMicroelectronics when the device is manufactured, and protected against spurious write/erase operations. For further details, please refer to the AN2606 available from *www.st.com*.
  - 1 Kbyte (128 double word) OTP (one-time programmable) bytes for user data. The OTP area is available in Bank 1 only. The OTP data cannot be erased and can be written only once. If only one bit is at 0, the entire double word cannot be written anymore, even with the value 0x0000 0000 0000 0000.
  - Option bytes for user configuration.

The memory organization is based on a main area and an information block as shown in *Table 8*

Table 8. Flash module - 1 MB dual bank organization

Flash area		Flash memory addresses	Size (bytes)	Name
Main memory	Bank 1	0x0800 0000 - 0x0800 07FF	2 K	Page 0
		0x0800 0800 - 0x0800 0FFF	2 K	Page 1
		0x0800 1000 - 0x0800 17FF	2 K	Page 2
		0x0800 1800 - 0x0800 1FFF	2 K	Page 3
		- - - -	- - - -	- - - -
		0x0807 F800 - 0x0807 FFFF	2 K	Page 255
	Bank 2	0x0808 0000 - 0x0808 07FF	2 K	Page 256
		0x0808 0800 - 0x0808 0FFF	2 K	Page 257
		0x0808 1000 - 0x0808 17FF	2 K	Page 258
		0x0808 1800 - 0x0808 1FFF	2 K	Page 259
		- - - -	- - - -	- - - -
		0x080F F800 - 0x080F FFFF	2 K	Page 511

Table 8. Flash module - 1 MB dual bank organization (continued)

Flash area		Flash memory addresses	Size (bytes)	Name
Information block	Bank 1	0x1FFF 0000 - 0x1FFF 6FFF	28 K	System memory
	Bank 2	0x1FFF 8000 - 0x1FFF EFFF	28 K	
	Bank 1	0x1FFF 7000 - 0x1FFF 73FF	1 K	OTP area
	Bank 1	0x1FFF 7800 - 0x1FFF 780F	16	Option bytes
	Bank 2	0x1FFF F800 - 0x1FFF F80F	16	

Table 9. Flash module - 512 KB dual bank organization(1)

Flash area		Flash memory addresses	Size (bytes)	Name
Main memory	Bank 1	0x0800 0000 - 0x0800 07FF	2 K	Page 0
		0x0800 0800 - 0x0800 0FFF	2 K	Page 1
		0x0800 1000 - 0x0800 17FF	2 K	Page 2
		0x0800 1800 - 0x0800 1FFF	2 K	Page 3
		- - - -	- - - -	- - - -
		0x0803 F800 - 0x0803 FFFF	2 K	Page 127
	Bank 2	0x0804 0000 - 0x0804 07FF	2 K	Page 256
		0x0804 0800 - 0x0804 0FFF	2 K	Page 257
		0x0804 1000 - 0x0804 17FF	2 K	Page 258
		0x0804 1800 - 0x0804 1FFF	2 K	Page 259
		- - - -	- - - -	- - - -
		0x0807 F800 - 0x0807 FFFF	2 K	Page 383
Information block	Bank 1	0x1FFF 0000 - 0x1FFF 6FFF	28 K	System memory
	Bank 2	0x1FFF 8000 - 0x1FFF EFFF	28 K	
	Bank 1	0x1FFF 7000 - 0x1FFF 73FF	1 K	OTP area
	Bank 1	0x1FFF 7800 - 0x1FFF 780F	16	Option bytes
	Bank 2	0x1FFF F800 - 0x1FFF F80F	16	

1. For 512 KB devices, option DUALBANK=1

Table 10. Flash module - 256 KB dual bank organization(1)

Flash area		Flash memory addresses	Size (bytes)	Name
Main memory	Bank 1	0x0800 0000 - 0x0800 07FF	2 K	Page 0
		0x0800 0800 - 0x0800 0FFF	2 K	Page 1
		0x0800 1000 - 0x0800 17FF	2 K	Page 2
		0x0800 1800 - 0x0800 1FFF	2 K	Page 3
		- - - -	- - - -	- - - -
		0x0801 F800 - 0x0801 FFFF	2 K	Page 63
	Bank 2	0x0802 0000 - 0x0802 07FF	2 K	Page 256
		0x0802 0800 - 0x0802 0FFF	2 K	Page 257
		0x0802 1000 - 0x0802 17FF	2 K	Page 258
		0x0802 1800 - 0x0802 1FFF	2 K	Page 259
		- - - -	- - - -	- - - -
		0x0803 F800 - 0x0803 FFFF	2 K	Page 319
Information block	Bank 1	0x1FFF 0000 - 0x1FFF 6FFF	28 K	System memory
	Bank 2	0x1FFF 8000 - 0x1FFF EFFF	28 K	
	Bank 1	0x1FFF 7000 - 0x1FFF 73FF	1 K	OTP area
	Bank 1	0x1FFF 7800 - 0x1FFF 780F	16	Option bytes
	Bank 2	0x1FFF F800 - 0x1FFF F80F	16	

1. For 256 KB devices, option DUALBANK=1

3.3.2 Error code correction (ECC)

Data in Flash memory are 72-bits words: 8 bits are added per double word (64 bits). The ECC mechanism supports:

- One error detection and correction
- Two errors detection

When one error is detected and corrected, the flag ECCC (ECC correction) is set in *Flash ECC register (FLASH_ECCR)*. If ECCCIE is set, an interrupt is generated.

When two errors are detected, a flag ECCD (ECC detection) is set in FLASH_ECCR register. In this case, a NMI is generated.

When an ECC error is detected, the address of the failing double word and its associated bank are saved in ADDR_ECC[20:0] and BK_ECC in the FLASH_ECCR register. ADDR_ECC[2:0] are always cleared.

When ECCC or ECCD is set, ADDR_ECC and BK_ECC are not updated if a new ECC error occurs. FLASH_ECCR is updated only when ECC flags are cleared.

Note: For a virgin data: 0xFF FFFF FFFF FFFF FFFF, one error is detected and corrected but two errors detection is not supported.

When an ECC error is reported, a new read at the failing address may not generate an ECC error if the data is still present in the current buffer, even if ECCC and ECCD are cleared.

3.3.3 Read access latency

To correctly read data from Flash memory, the number of wait states (LATENCY) must be correctly programmed in the *Flash access control register (FLASH_ACR)* according to the frequency of the CPU clock (HCLK) and the internal voltage range of the device V_{CORE}. Refer to *Section 5.1.8: Dynamic voltage scaling management*. *Table 11* shows the correspondence between wait states and CPU clock frequency.

Table 11. Number of wait states according to CPU clock (HCLK) frequency

Wait states (WS) (LATENCY)	HCLK (MHz)	
	V_{CORE} Range 1[1]	V_{CORE} Range 2[2]
0 WS (1 CPU cycles)	≤ 16	≤ 6
1 WS (2 CPU cycles)	≤ 32	≤ 12
2 WS (3 CPU cycles)	≤ 48	≤ 18
3 WS (4 CPU cycles)	≤ 64	≤ 26
4 WS (5 CPU cycles)	≤ 80	≤ 26

1. Also for SMPS Range1 or SMPS Range2 high.
2. Also for SMPS Range2 low.

After reset, the CPU clock frequency is 4 MHz and 0 wait state (WS) is configured in the FLASH_ACR register.

When changing the CPU frequency, the following software sequences must be applied in order to tune the number of wait states needed to access the Flash memory:

Increasing the CPU frequency:

1. Program the new number of wait states to the LATENCY bits in the *Flash access control register (FLASH_ACR)*.
2. Check that the new number of wait states is taken into account to access the Flash memory by reading the FLASH_ACR register.
3. Modify the CPU clock source by writing the SW bits in the RCC_CFGR register.
4. If needed, modify the CPU clock prescaler by writing the HPRE bits in RCC_CFGR.
5. Check that the new CPU clock source or/and the new CPU clock prescaler value is/are taken into account by reading the clock source status (SWS bits) or/and the AHB prescaler value (HPRE bits), respectively, in the RCC_CFGR register.

Decreasing the CPU frequency:

1. Modify the CPU clock source by writing the SW bits in the RCC_CFGR register.
2. If needed, modify the CPU clock prescaler by writing the HPRE bits in RCC_CFGR.
3. Check that the new CPU clock source or/and the new CPU clock prescaler value is/are taken into account by reading the clock source status (SWS bits) or/and the AHB prescaler value (HPRE bits), respectively, in the RCC_CFGR register.
4. Program the new number of wait states to the LATENCY bits in *Flash access control register (FLASH_ACR)*.
5. Check that the new number of wait states is used to access the Flash memory by reading the FLASH_ACR register.

3.3.4 Adaptive real-time memory accelerator (ART Accelerator™)

The proprietary Adaptive real-time (ART) memory accelerator is optimized for STM32 industry-standard Arm® Cortex®-M4 with FPU processors. It balances the inherent performance advantage of the Arm® Cortex®-M4 with FPU over Flash memory technologies, which normally requires the processor to wait for the Flash memory at higher operating frequencies.

To release the processor full performance, the accelerator implements an instruction prefetch queue and branch cache which increases program execution speed from the 64-bit Flash memory. Based on CoreMark benchmark, the performance achieved thanks to the ART accelerator is equivalent to 0 wait state program execution from Flash memory at a CPU frequency up to 80 MHz.

Instruction prefetch

The Cortex®-M4 fetches the instruction over the ICode bus and the literal pool (constant/data) over the DCode bus. The prefetch block aims at increasing the efficiency of ICode bus accesses.

Each Flash memory read operation provides 64 bits from either two instructions of 32 bits or four instructions of 16 bits according to the program launched. This 64-bits current instruction line is saved in a current buffer. So, in case of sequential code, at least two CPU cycles are needed to execute the previous read instruction line. Prefetch on the ICode bus can be used to read the next sequential instruction line from the Flash memory while the current instruction line is being requested by the CPU.

Prefetch is enabled by setting the PRFTEN bit in the *Flash access control register (FLASH_ACR)*. This feature is useful if at least one wait state is needed to access the Flash memory.

Figure 5 shows the execution of sequential 16-bit instructions with and without prefetch when 3 WS are needed to access the Flash memory.

Figure 5. Sequential 16-bit instructions execution

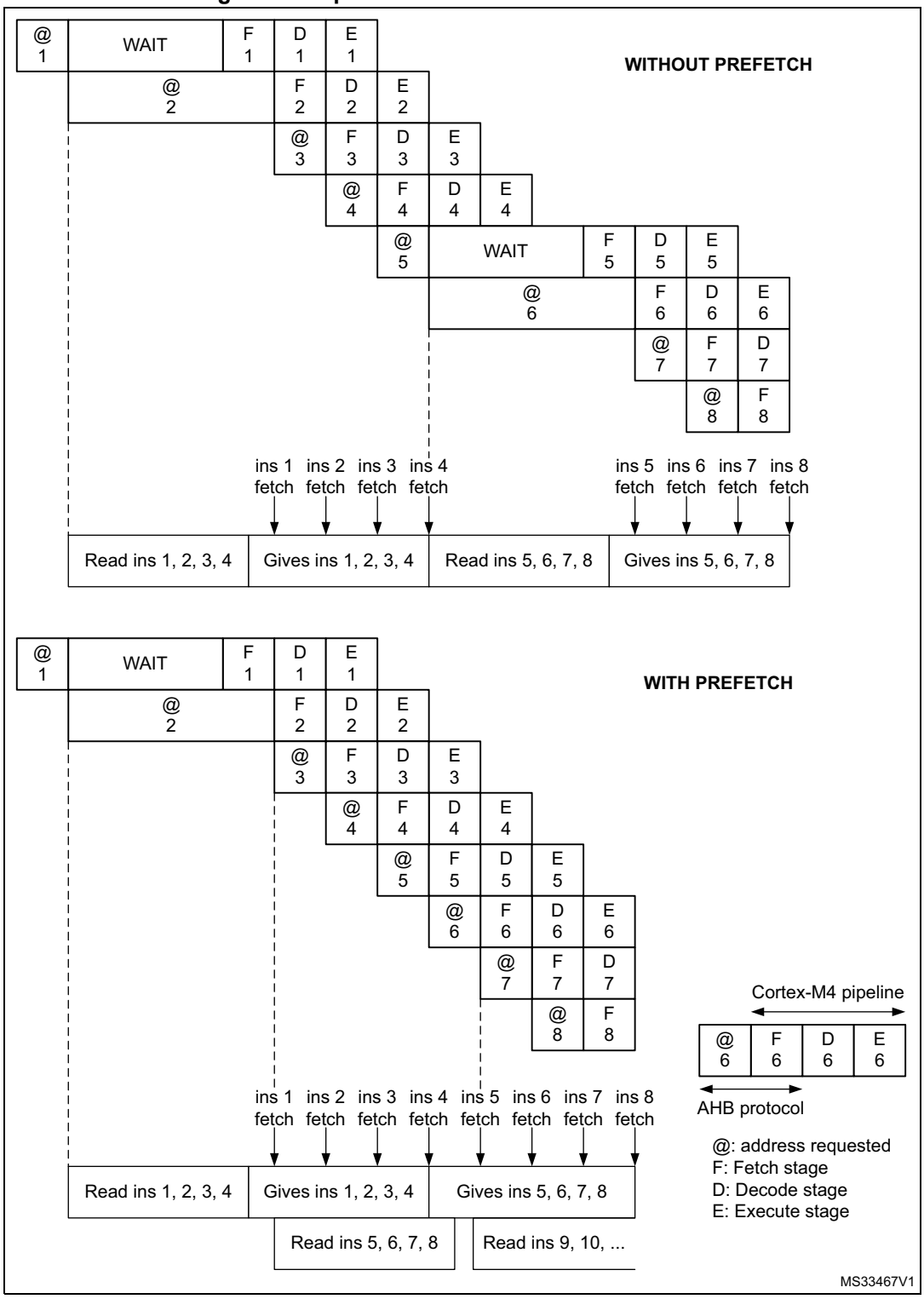

When the code is not sequential (branch), the instruction may not be present in the currently used instruction line or in the prefetched instruction line. In this case (miss), the penalty in terms of number of cycles is at least equal to the number of wait states.

If a loop is present in the current buffer, no new flash access is performed.

Instruction cache memory (I-Cache)

To limit the time lost due to jumps, it is possible to retain 32 lines of 4*64 bits in an instruction cache memory.This feature can be enabled by setting the instruction cache enable (ICEN) bit in the *Flash access control register (FLASH_ACR)*. Each time a miss occurs (requested data not present in the currently used instruction line, in the prefetched instruction line or in the instruction cache memory), the line read is copied into the instruction cache memory. If some data contained in the instruction cache memory are requested by the CPU, they are provided without inserting any delay. Once all the instruction cache memory lines have been filled, the LRU (least recently used) policy is used to determine the line to replace in the instruction memory cache. This feature is particularly useful in case of code containing loops.

The Instruction cache memory is enable after system reset.

Data cache memory (D-Cache)

Literal pools are fetched from Flash memory through the DCode bus during the execution stage of the CPU pipeline. Each DCode bus read access fetches 64 bits which are saved in a current buffer. The CPU pipeline is consequently stalled until the requested literal pool is provided. To limit the time lost due to literal pools, accesses through the AHB databus DCode have priority over accesses through the AHB instruction bus ICode.

If some literal pools are frequently used, the data cache memory can be enabled by setting the data cache enable (DCEN) bit in the *Flash access control register (FLASH_ACR)*. This feature works like the instruction cache memory, but the retained data size is limited to 8 rows of 4*64 bits.

The Data cache memory is enable after system reset.

Note: The D-Cache is active only when data is requested by the CPU (not by DMA1 and DMA2).

Data in option bytes block are not cacheable.

3.3.5 Flash program and erase operations

The STM32L47x/L48x/L49x/L4Ax embedded Flash memory can be programmed using in-circuit programming or in-application programming.

The **in-circuit programming (ICP)** method is used to update the entire contents of the Flash memory, using the JTAG, SWD protocol or the boot loader to load the user application into the microcontroller. ICP offers quick and efficient design iterations and eliminates unnecessary package handling or socketing of devices.

In contrast to the ICP method, **in-application programming (IAP)** can use any communication interface supported by the microcontroller (I/Os, USB, CAN, UART, I^2C, SPI, etc.) to download programming data into memory. IAP allows the user to re-program the Flash memory while the application is running. Nevertheless, part of the application has to have been previously programmed in the Flash memory using ICP.

The contents of the Flash memory are not guaranteed if a device reset occurs during a Flash memory operation.

An on-going Flash memory operation will not block the CPU as long as the CPU does not access the same Flash memory bank. Code or data fetches are possible on one bank while

a write/erase operation is performed to the other bank (refer to *Section 3.3.8: Read-while-write (RWW)*).

On the contrary, during a program/erase operation to the Flash memory, any attempt to read the same Flash memory bank will stall the bus. The read operation will proceed correctly once the program/erase operation has completed.

Unlocking the Flash memory

After reset, write is not allowed in the *Flash control register (FLASH_CR)* to protect the Flash memory against possible unwanted operations due, for example, to electric disturbances. The following sequence is used to unlock this register:

1. Write KEY1 = 0x45670123 in the *Flash key register (FLASH_KEYR)*
2. Write KEY2 = 0xCDEF89AB in the FLASH_KEYR register.

Any wrong sequence will lock up the FLASH_CR register until the next system reset. In the case of a wrong key sequence, a bus error is detected and a Hard Fault interrupt is generated.

The FLASH_CR register can be locked again by software by setting the LOCK bit in the FLASH_CR register.

Note: The FLASH_CR register cannot be written when the BSY bit in the Flash status register (FLASH_SR) is set. Any attempt to write to it with the BSY bit set will cause the AHB bus to stall until the BSY bit is cleared.

3.3.6 Flash main memory erase sequences

The Flash memory erase operation can be performed at page level, bank level or on the whole Flash memory (Mass Erase). Mass Erase does not affect the Information block (system flash, OTP and option bytes).

Page erase

To erase a page (2 Kbyte), follow the procedure below:

1. Check that no Flash memory operation is ongoing by checking the BSY bit in the *Flash status register (FLASH_SR)*.
2. Check and clear all error programming flags due to a previous programming. If not, PGSERR is set.
3. Set the PER bit and select the page you wish to erase (PNB) with the associated bank (BKER) in the *Flash control register (FLASH_CR)*.
4. Set the STRT bit in the FLASH_CR register.
5. Wait for the BSY bit to be cleared in the FLASH_SR register.

Note: The internal oscillator HSI16 (16 MHz) is enabled automatically when STRT bit is set, and disabled automatically when STRT bit is cleared, except if the HSI16 is previously enabled with HSION in RCC_CR register.

If the page erase is part of write-protected area (by WRP or PCROP), WRPERR is set and the page erase request is aborted.

Bank 1, Bank 2 or both banks Mass erase

To perform a bank Mass Erase, follow the procedure below:

1. Check that no Flash memory operation is ongoing by checking the BSY bit in the FLASH_SR register.
2. Check and clear all error programming flags due to a previous programming. If not, PGSERR is set.
3. Set the MER1 bit or/and MER2 (depending on the bank) in the *Flash control register (FLASH_CR)*. Both banks can be selected in the same operation.
4. Set the STRT bit in the FLASH_CR register.
5. Wait for the BSY bit to be cleared in the *Flash status register (FLASH_SR)*.

Note: The internal oscillator HSI16 (16 MHz) is enabled automatically when STRT bit is set, and disabled automatically when STRT bit is cleared, except if the HSI16 is previously enabled with HSION in RCC_CR register.

If the bank to erase or if one of the banks to erase contains a write-protected area (by WRP or PCROP), WRPERR is set and the mass erase request is aborted (for both banks if both are selected).

3.3.7 Flash main memory programming sequences

The Flash memory is programmed 72 bits at a time (64 bits + 8 bits ECC).

Programming in a previously programmed address is not allowed except if the data to write is full zero, and any attempt will set PROGERR flag in the *Flash status register (FLASH_SR).*

It is only possible to program double word (2 x 32-bit data).

- Any attempt to write byte or half-word will set SIZERR flag in the FLASH_SR register.
- Any attempt to write a double word which is not aligned with a double word address will set PGAERR flag in the FLASH_SR register.

Standard programming

The Flash memory programming sequence in standard mode is as follows:

1. Check that no Flash main memory operation is ongoing by checking the BSY bit in the *Flash status register (FLASH_SR)*.
2. Check and clear all error programming flags due to a previous programming. If not, PGSERR is set.
3. Set the PG bit in the *Flash control register (FLASH_CR)*.
4. Perform the data write operation at the desired memory address, inside main memory block or OTP area. Only double word can be programmed.
   - Write a first word in an address aligned with double word
   - Write the second word
5. Wait until the BSY bit is cleared in the FLASH_SR register.
6. Check that EOP flag is set in the FLASH_SR register (meaning that the programming operation has succeed), and clear it by software.
7. Clear the PG bit in the FLASH_CR register if there no more programming request anymore.

Note: When the flash interface has received a good sequence (a double word), programming is automatically launched and BSY bit is set. The internal oscillator HSI16 (16 MHz) is enabled

automatically when PG bit is set, and disabled automatically when PG bit is cleared, except if the HSI16 is previously enabled with HSION in RCC_CR register.

If the user needs to program only one word, double word must be completed with the erase value 0xFFFF FFFF to launch automatically the programming.

ECC is calculated from the double word to program.

Fast programming

This mode allows to program a row (32 double word) and to reduce the page programming time by eliminating the need for verifying the flash locations before they are programmed and to avoid rising and falling time of high voltage for each double word. During fast programming, the CPU clock frequency (HCLK) must be at least 8 MHz.

Only the main memory can be programmed in Fast programming mode.

The Flash main memory programming sequence in standard mode is as follows:

1. Perform a mass erase of the bank to program. If not, PGSERR is set.
2. Check that no Flash main memory operation is ongoing by checking the BSY bit in the *Flash status register (FLASH_SR)*.
3. Check and clear all error programming flag due to a previous programming.
4. Set the FSTPG bit in *Flash control register (FLASH_CR)*.
5. Write the 32 double words to program a row. Only double words can be programmed:
   - Write a first word in an address aligned with double word
   - Write the second word.
6. Wait until the BSY bit is cleared in the FLASH_SR register.
7. Check that EOP flag is set in the FLASH_SR register (meaning that the programming operation has succeed), and clear it by software.
8. Clear the FSTPG bit in the FLASH_CR register if there no more programming request anymore.

Note: *If the flash is attempted to be written in Fast programming mode while a read operation is on going in the same bank, the programming is aborted without any system notification (no error flag is set).*

When the Flash interface has received the first double word, programming is automatically launched. The BSY bit is set when the high voltage is applied for the first double word, and it is cleared when the last double word has been programmed or in case of error. The internal oscillator HSI16 (16 MHz) is enabled automatically when FSTPG bit is set, and disabled automatically when FSTPG bit is cleared, except if the HSI16 is previously enabled with HSION in RCC_CR register.

The 32 double word must be written successively. The high voltage is kept on the flash for all the programming. Maximum time between two double words write requests is the time programming (around 20us). If a second double word arrives after this time programming, fast programming is interrupted and MISSERR is set.

High voltage mustn't exceed 8 ms for a full row between 2 erases. This is guaranteed by the sequence of 32 double words successively written with a clock system greater or equal to 8MHz. An internal time-out counter counts 7ms when Fast programming is set and stops the programming when time-out is over. In this case the FASTERR bit is set.

If an error occurs, high voltage is stopped and next double word to programmed is not programmed. Anyway, all previous double words have been properly programmed.

Programming errors

Several kind of errors can be detected. In case of error, the Flash operation (programming or erasing) is aborted.

- **PROGERR**: Programming Error

  In standard programming: PROGERR is set if the word to write is not previously erased (except if the value to program is full zero).

- **SIZERR**: Size Programming Error

  In standard programming or in fast programming: only double word can be programmed and only 32-bit data can be written. SIZERR is set if a byte or an half-word is written.

- **PGAERR**: Alignment Programming error

  PGAERR is set if one of the following conditions occurs:

  – In standard programming: the first word to be programmed is not aligned with a double word address, or the second word doesn't belong to the same double word address.

  – In fast programming: the data to program doesn't belong to the same row than the previous programmed double words, or the address to program is not greater than the previous one.

- **PGSERR**: Programming Sequence Error

  PGSERR is set if one of the following conditions occurs:

  – In the standard programming sequence or the fast programming sequence: a data is written when PG and FSTPG are cleared.

  – In the standard programming sequence or the fast programming sequence: MER1, MER2, and PER are not cleared when PG or FSTPG is set.

  – In the fast programming sequence: the Mass erase is not performed before setting FSTPG bit.

  – In the mass erase sequence: PG, FSTPG, and PER are not cleared when MER1 or MER2 is set.

  – In the page erase sequence: PG, FSTPG, MER1 and MER2 are not cleared when PER is set.

  – PGSERR is set also if PROGERR, SIZERR, PGAERR, MISSERR, FASTERR or PGSERR is set due to a previous programming error.

- **WRPERR**: Write Protection Error

  WRPERR is set if one of the following conditions occurs:

  – Attempt to program or erase in a write protected area (WRP) or in a PCROP area.

  – Attempt to perform a bank erase when one page or more is protected by WRP or PCROP.

  – The debug features are connected or the boot is executed from SRAM or from System flash when the read protection (RDP) is set to Level 1.

  – Attempt to modify the option bytes when the read protection (RDP) is set to Level 2.

- **MISSERR**: Fast Programming Data Miss Error

  In fast programming: all the data must be written successively. MISSERR is set if the previous data programmation is finished and the next data to program is not written yet.

- **FASTERR**: Fast Programming Error

In fast programming: FASTERR is set if one of the following conditions occurs:

– When FSTPG bit is set for more than 7ms which generates a time-out detection.
– When the row fast programming has been interrupted by a MISSERR, PGAERR, WRPERR or SIZERR.

If an error occurs during a program or erase operation, one of the following error flags is set in the FLASH_SR register:

PROGERR, SIZERR, PGAERR, PGSERR, MISSERR (Program error flags),

WRPERR (Protection error flag)

In this case, if the error interrupt enable bit ERRIE is set in the *Flash status register (FLASH_SR)*, an interrupt is generated and the operation error flag OPERR is set in the FLASH_SR register.

Note: If several successive errors are detected (for example, in case of DMA transfer to the Flash memory), the error flags cannot be cleared until the end of the successive write requests.

Programming and caches

If a Flash memory write access concerns some data in the data cache, the Flash write access modifies the data in the Flash memory and the data in the cache.

If an erase operation in Flash memory also concerns data in the data or instruction cache, you have to make sure that these data are rewritten before they are accessed during code execution. If this cannot be done safely, it is recommended to flush the caches by setting the DCRST and ICRST bits in the *Flash access control register (FLASH_ACR)*.

Note: The I/D cache should be flushed only when it is disabled (I/DCEN = 0).

3.3.8 Read-while-write (RWW)

The Flash memory is divided into two banks allowing read-while-write operations. This feature allows to perform a read operation from one bank while an erase or program operation is performed to the other bank.

Note: Write-while-write operations are not allowed. As an example, It is not possible to perform an erase operation on one bank while programming the other one.

Read from bank 1 while page erasing in bank 2 (or vice versa)

While executing a program code from bank 1, it is possible to perform a page erase operation on bank 2 (and vice versa). Follow the procedure below:

1. Check that no Flash memory operation is ongoing by checking the BSY bit in the *Flash status register (FLASH_SR)* (BSY is active when erase/program operation is on going in bank 1 or bank 2).
2. Set PER bit, PSB to select the page and BKER to select the bank in the *Flash control register (FLASH_CR)*.
3. Set the STRT bit in the FLASH_CR register.
4. Wait for the BSY bit to be cleared (or use the EOP interrupt).

Read from bank 1 while mass erasing bank 2 (or vice versa)

While executing a program code from bank 1, it is possible to perform a mass erase operation on bank 2 (and vice versa). Follow the procedure below:

1. Check that no Flash memory operation is ongoing by checking the BSY bit in the *Flash status register (FLASH_SR)* (BSY is active when erase/program operation is on going in bank 1 or bank 2).
2. Set MER1 or MER2 to in the *Flash control register (FLASH_CR)*.
3. Set the STRT bit in the FLASH_CR register.
4. Wait for the BSY bit to be cleared (or use the EOP interrupt).

Read from bank 1 while programming bank 2 (or vice versa)

While executing a program code from bank 1, it is possible to perform a program operation on the bank 2. (and vice versa). Follow the procedure below:

1. Check that no Flash memory operation is ongoing by checking the BSY bit in the *Flash status register (FLASH_SR)* (BSY is active when erase/program operation is on going on bank 1 or bank 2).
2. Set the PG bit in the *Flash control register (FLASH_CR)*.
3. Perform the data write operations at the desired address memory inside the main memory block or OTP area.
4. Wait for the BSY bit to be cleared (or use the EOP interrupt).

3.4 FLASH option bytes

3.4.1 Option bytes description

The option bytes are configured by the end user depending on the application requirements. As a configuration example, the watchdog may be selected in hardware or software mode (refer to *Section 3.4.2: Option bytes programming*).

A double word is split up as follows in the option bytes:

Table 12. Option byte format

63-56	55-48	47-40	40-32	31-24	23-16	15 -8	7-0
Complemented option byte 3	Complemented option byte 2	Complemented option byte 1	Complemented option byte 0	Option byte 3	Option byte 2	Option byte 1	Option byte 0

The organization of these bytes inside the information block is as shown in *Table 13: Option byte organization*.

The option bytes can be read from the memory locations listed in *Table 13: Option byte organization* or from the Option byte registers:

- *Flash option register (FLASH_OPTR)*
- *Flash Bank 1 PCROP Start address register (FLASH_PCROP1SR)*
- *Flash Bank 1 PCROP End address register (FLASH_PCROP1ER)*
- *Flash Bank 1 WRP area A address register (FLASH_WRP1AR)*
- *Flash Bank 1 WRP area B address register (FLASH_WRP1BR)*
- *Flash Bank 2 PCROP Start address register (FLASH_PCROP2SR)*
- *Flash Bank 2 PCROP End address register (FLASH_PCROP2ER)*
- *Flash Bank 2 WRP area A address register (FLASH_WRP2AR)*
- *Flash Bank 2 WRP area B address register (FLASH_WRP2BR)*.

Table 13. Option byte organization

BANK	Address	63	[62:56]	[55:48]	[47:40]	[39:32]	31	[30:24]	[23:16]	[15:8]	[7:0]
Bank 1	1FFF7800	$\overline{\text{USER OPT}}$				$\overline{\text{RDP}}$	USER OPT				RDP
	1FFF7808	Unused			$\overline{\text{PCROP1_STRT}}$		Unused			PCROP1_STRT	
	1FFF7810	$\overline{\text{PCROP_RDP}}$	Unused		$\overline{\text{PCROP1_END}}$		PCROP_RDP	Unused		PCROP1_END	
	1FFF7818	Unused		$\overline{\text{WRP1A_END}}$	Unused	$\overline{\text{WRP1A_STRT}}$	Unused		WRP1A_END	Unused	WRP1A_STRT
	1FFF7820	Unused		$\overline{\text{WRP1B_END}}$	Unused	$\overline{\text{WRP1B_STRT}}$	Unused		WRP1B_END	Unused	WRP1B_STRT

Table 13. Option byte organization (continued)

BANK	Address	63	[62:56]	[55:48]	[47:40]	[39:32]	31	[30:24]	[23:16]	[15:8]	[7:0]
Bank 2	1FFFF800	Unused					Unused				
	1FFFF808	Unused			$\overline{\text{PCROP2_STRT}}$		Unused			PCROP2_STRT	
	1FFFF810	Unused			$\overline{\text{PCROP2_END}}$		Unused			PCROP2_END	
	1FFFF818	Unused		$\overline{\text{WRP2A_END}}$	Unused	$\overline{\text{WRP2A_STRT}}$	Unused		WRP2A_END	Unused	WRP2A_STRT
	1FFFF820	Unused		$\overline{\text{WRP2B_END}}$	Unused	$\overline{\text{WRP2B_STRT}}$	Unused		WRP2B_END	Unused	WRP2B_STRT

User and read protection option bytes

Flash memory address: 0x1FFF 7800

ST production value: 0xFFEF F8AA

31	30	29	28	27	26	25	24	23	22	21	20	19	18	17	16
Res.	Res.	Res.	Res.	n BOOT0	nSW BOOT0	SRAM2_RST	SRAM2_PE	n BOOT1	Res.	DUAL BANK	BFB2	WWDG_SW	IWGD_STDBY	IWDG_STOP	IWDG_SW
				r	r	r	r	r		r	r	r	r	r	r

15	14	13	12	11	10	9	8	7	6	5	4	3	2	1	0
Res.	nRST_SHDW	nRST_STDBY	nRST_STOP	Res.	BOR_LEV[2:0]			RDP[7:0]							
	r	r	r		r	r	r	r	r	r	r	r	r	r	r

Bits 31:28 Reserved, must be kept at reset value.

Bit 27 **nBOOT0:** nBOOT0 option bit (this bit is reserved for STM32L47x/L48x devices)

0: nBOOT0 = 0
1: nBOOT0 = 1

Bit 26 **nSWBOOT0:** Software BOOT0 (this bit is reserved for STM32L47x/L48x devices)

0: BOOT0 taken from the option bit nBOOT0
1: BOOT0 taken from PH3/BOOT0 pin

Bit 25 **SRAM2_RST:** SRAM2 Erase when system reset

0: SRAM2 erased when a system reset occurs
1: SRAM2 is not erased when a system reset occurs

Bit 24 **SRAM2_PE:** SRAM2 parity check enable

0: SRAM2 parity check enable
1: SRAM2 parity check disable

Bit 23 **nBOOT1:** Boot configuration

Together with the BOOT0 pin, this bit selects boot mode from the Flash main memory, SRAM1 or the System memory. Refer to *Section 2.6: Boot configuration*.

Bit 22 Reserved, must be kept at reset value.

Bit 21 **DUALBANK:** Dual-Bank on 512 KB or 256 KB Flash memory devices

0: 256 KB/512 KB Single-bank Flash: Contiguous addresses in Bank 1
1: 256 KB/512 KB Dual-bank Flash: Refer to *Table 9* and *Table 10*

Bit 20 **BFB2:** Dual-bank boot
0: Dual-bank boot disable
1: Dual-bank boot enable

Bit 19 **WWDG_SW:** Window watchdog selection
0: Hardware window watchdog
1: Software window watchdog

Bit 18 **IWDG_STDBY:** Independent watchdog counter freeze in Standby mode
0: Independent watchdog counter is frozen in Standby mode
1: Independent watchdog counter is running in Standby mode

Bit 17 **IWDG_STOP:** Independent watchdog counter freeze in Stop mode
0: Independent watchdog counter is frozen in Stop mode
1: Independent watchdog counter is running in Stop mode

Bit 16 **IDWG_SW:** Independent watchdog selection
0: Hardware independent watchdog
1: Software independent watchdog

Bit 15 Reserved, must be kept at reset value.

Bit 14 **nRST_SHDW**
0: Reset generated when entering the Shutdown mode
1: No reset generated when entering the Shutdown mode

Bit 13 **nRST_STDBY**
0: Reset generated when entering the Standby mode
1: No reset generate when entering the Standby mode

Bit 12 **nRST_STOP**
0: Reset generated when entering the Stop mode
1: No reset generated when entering the Stop mode

Bit 11 Reserved, must be kept at reset value.

Bits10:8 **BOR_LEV:** BOR reset Level
These bits contain the VDD supply level threshold that activates/releases the reset.
000: BOR Level 0. Reset level threshold is around 1.7 V
001: BOR Level 1. Reset level threshold is around 2.0 V
010: BOR Level 2. Reset level threshold is around 2.2 V
011: BOR Level 3. Reset level threshold is around 2.5 V
100: BOR Level 4. Reset level threshold is around 2.8 V

Bits 7:0 **RDP:** Read protection level
0xAA: Level 0, read protection not active
0xCC: Level 2, chip read protection active
Others: Level 1, memories read protection active

Bank 1 PCROP Start address option bytes

Flash memory address: 0x1FFF 7808

ST production value: 0xFFFF FFFF

31	30	29	28	27	26	25	24	23	22	21	20	19	18	17	16
Res.	Res.	Res.	Res.	Res.	Res.	Res.	Res.	Res.	Res.	Res.	Res.	Res.	Res.	Res.	Res.

15	14	13	12	11	10	9	8	7	6	5	4	3	2	1	0
PCROP1_STRT[15:0]															
r	r	r	r	r	r	r	r	r	r	r	r	r	r	r	r

Bits 31:16 Reserved, must be kept at reset value.

Bits 15:0 **PCROP1_STRT:** Bank 1 PCROP area start offset
PCROP1_STRT contains the first double-word of the bank 1 PCROP area.

Bank 1 PCROP End address option bytes

Flash memory address: 0x1FFF 7810

ST production value: 0xFFFF 0000

31	30	29	28	27	26	25	24	23	22	21	20	19	18	17	16
PCROP _RDP	Res.	Res.	Res.	Res.	Res.	Res.	Res.	Res.	Res.	Res.	Res.	Res.	Res.	Res.	Res.
r															

15	14	13	12	11	10	9	8	7	6	5	4	3	2	1	0
PCROP1_END[15:0]															
r	r	r	r	r	r	r	r	r	r	r	r	r	r	r	r

Bit 31 **PCROP_RDP:** PCROP area preserved when RDP level decreased
This bit is set only. It is reset after a full mass erase due to a change of RDP from Level 1 to Level 0.
0: PCROP area is not erased when the RDP level is decreased from Level 1 to Level 0.
1: PCROP area is erased when the RDP level is decreased from Level 1 to Level 0 (full mass erase).

Bits 30:16 Reserved, must be kept at reset value.

Bits 15:0 **PCROP1_END:** Bank 1 PCROP area end offset
PCROP1_END contains the last double-word of the bank 1 PCROP area.

Bank 1 WRP Area A address option bytes

Flash memory address: 0x1FFF 7818

ST production value: 0xFF00 FFFF

31	30	29	28	27	26	25	24	23	22	21	20	19	18	17	16
Res.	Res.	Res.	Res.	Res.	Res.	Res.	Res.	WRP1A_END[7:0]							
								r	r	r	r	r	r	r	r

15	14	13	12	11	10	9	8	7	6	5	4	3	2	1	0
Res.	Res.	Res.	Res.	Res.	Res.	Res.	Res.	WRP1A_STRT[7:0]							
								r	r	r	r	r	r	r	r

Bits 31:24 Reserved, must be kept at reset value.

Bits 23:16 **WRP1A_END:** Bank 1 WRP first area “A” end offset
WRPA1_END contains the last page of the Bank 1 WRP first area.

Bits 15:8 Reserved, must be kept at reset value.

Bits 7:0 **WRP1A_STRT:** Bank 1 WRP first area “A” start offset
WRPA1_STRT contains the first page of the Bank 1 WRP first area.

Bank 1 WRP Area B address option bytes

Flash memory address: 0x1FFF 7820

ST production value: 0xFF00 FFFF

31	30	29	28	27	26	25	24	23	22	21	20	19	18	17	16
Res.	Res.	Res.	Res.	Res.	Res.	Res.	Res.	WRP1B_END[7:0]							
								r	r	r	r	r	r	r	r
15	14	13	12	11	10	9	8	7	6	5	4	3	2	1	0
Res.	Res.	Res.	Res.	Res.	Res.	Res.	Res.	WRP1B_STRT[7:0]							
								r	r	r	r	r	r	r	r

Bits 31:24 Reserved, must be kept at reset value.

Bits 23:16 **WRP1B_END:** Bank 1 WRP first area “B” end offset
WRPB1_END contains the last page of the Bank 1 WRP second area.

Bits 15:8 Reserved, must be kept at reset value.

Bits 7:0 **WRP1B_STRT:** Bank 1 WRP first area “B” start offset
WRPB1_STRT contains the first page of the Bank 1 WRP second area.

Bank 2 PCROP Start address option bytes

Flash memory address: 0x1FFF F808

ST production value: 0xFFFF FFFF

31	30	29	28	27	26	25	24	23	22	21	20	19	18	17	16
Res.	Res.	Res.	Res.	Res.	Res.	Res.	Res.	Res.	Res.	Res.	Res.	Res.	Res.	Res.	Res.
15	14	13	12	11	10	9	8	7	6	5	4	3	2	1	0
PCROP2_STRT[15:0]															
r	r	r	r	r	r	r	r	r	r	r	r	r	r	r	r

Bits 31:16 Reserved, must be kept at reset value.

Bits 15:0 **PCROP2_STRT:** Bank 2 PCROP area start offset
PCROP2_STRT contains the first double-word of the bank 2 PCROP area.

Bank 2 PCROP End address option bytes

Flash memory address: 0x1FFF F810

ST production value: 0xFFFF0000

31	30	29	28	27	26	25	24	23	22	21	20	19	18	17	16
Res.	Res.	Res.	Res.	Res.	Res.	Res.	Res.	Res.	Res.	Res.	Res.	Res.	Res.	Res.	Res.

15	14	13	12	11	10	9	8	7	6	5	4	3	2	1	0
PCROP2_END[15:0]															
r	r	r	r	r	r	r	r	r	r	r	r	r	r	r	r

Bits 31:16 Reserved, must be kept at reset value.

Bits 15:0 **PCROP2_END:** Bank 2 PCROP area end offset
PCROP2_END contains the last double-word of the bank 2 PCROP area.

Bank 2 WRP Area A address option bytes

Flash memory address: 0x1FFF F818

ST production value: 0xFF00FFFF

31	30	29	28	27	26	25	24	23	22	21	20	19	18	17	16
Res.	Res.	Res.	Res.	Res.	Res.	Res.	Res.	WRP2A_END[15:0]							
								r	r	r	r	r	r	r	r

15	14	13	12	11	10	9	8	7	6	5	4	3	2	1	0
Res.	Res.	Res.	Res.	Res.	Res.	Res.	Res.	WRP2A_STRT[15:0]							
								r	r	r	r	r	r	r	r

Bits 31:24 Reserved, must be kept at reset value.

Bits 23:16 **WRP2A_END:** Bank 2 WRP first area “A” end offset
WRP2A_END contains the last page of the Bank 2 WRP first area.

Bits 15:8 Reserved, must be kept at reset value.

Bits 7:0 **WRP2A_STRT:** Bank 2 WRP first area “A” start offset
WRP2A_STRT contains the first page of the Bank 2 WRP first area.

Bank 2 WRP Area B address option bytes

Flash memory address: 0x1FFF F820

ST production value: 0xFF00FFFF

31	30	29	28	27	26	25	24	23	22	21	20	19	18	17	16
Res.	Res.	Res.	Res.	Res.	Res.	Res.	Res.	WRP2B_END[15:0]							
								r	r	r	r	r	r	r	r

15	14	13	12	11	10	9	8	7	6	5	4	3	2	1	0
Res.	Res.	Res.	Res.	Res.	Res.	Res.	Res.	WRP2B_STRT[15:0]							
								r	r	r	r	r	r	r	r

Bits 31:24 Reserved, must be kept at reset value.

Bits 23:16 **WRP2B_END:** Bank 2 WRP first area “B” end offset
WRP2B_END contains the last page of the Bank 2 WRP second area.

Bits 15:8 Reserved, must be kept at reset value.

Bits 7:0 **WRP2B_STRT:** Bank 2 WRP first area “B” start offset
WRP2B_STRT contains the first page of the Bank 2 WRP second area.

3.4.2 Option bytes programming

After reset, the options related bits in the *Flash control register (FLASH_CR)* are write-protected. To run any operation on the option bytes page, the option lock bit OPTLOCK in the *Flash control register (FLASH_CR)* must be cleared. The following sequence is used to unlock this register:

1. Unlock the FLASH_CR with the LOCK clearing sequence (refer to *Unlocking the Flash memory*).
2. Write OPTKEY1 = 0x08192A3B in the *Flash option key register (FLASH_OPTKEYR)*.
3. Write OPTKEY2 = 0x4C5D6E7F in the FLASH_OPTKEYR register.

The user options can be protected against unwanted erase/program operations by setting the OPTLOCK bit by software.

Note: If LOCK is set by software, OPTLOCK is automatically set too.

Modifying user options

The option bytes are programmed differently from a main memory user address. It is not possible to modify independently user options of bank 1 or bank 2. The users Options of the bank 1 are modified first.

To modify the user options value, follow the procedure below:

1. Check that no Flash memory operation is on going by checking the BSY bit in the *Flash status register (FLASH_SR)*.
2. Clear OPTLOCK option lock bit with the clearing sequence described above.
3. Write the desired options value in the options registers: *Flash option register (FLASH_OPTR)*, *Flash Bank 1 PCROP Start address register (FLASH_PCROP1SR)*, *Flash Bank 1 PCROP End address register (FLASH_PCROP1ER)*, *Flash Bank 1 WRP area A address register (FLASH_WRP1AR)*, *Flash Bank 1 WRP area B address register (FLASH_WRP1BR)*, *Flash Bank 2 PCROP Start address register (FLASH_PCROP2SR)*, *Flash Bank 2 PCROP End address register (FLASH_PCROP2ER)*, *Flash Bank 2 WRP area A address register (FLASH_WRP2AR)*, *Flash Bank 2 WRP area B address register (FLASH_WRP2BR)*.
4. Set the Options Start bit OPTSTRT in the *Flash control register (FLASH_CR)*.
5. Wait for the BSY bit to be cleared.

Note: Any modification of the value of one option is automatically performed by erasing both user option bytes pages first (bank 1 and bank 2) and then programming all the option bytes with the values contained in the flash option registers.

Option byte loading

After the BSY bit is cleared, all new options are updated into the flash but they are not applied to the system. They will have effect on the system when they are loaded. Option bytes loading (OBL) is performed in two cases:

- when OBL_LAUNCH bit is set in the *Flash control register (FLASH_CR)*.
- after a power reset (BOR reset or exit from Standby/Shutdown modes).

Option byte loader performs a read of the options block and stores the data into internal option registers. These internal registers configure the system and cannot be read with by software. Setting OBL_LAUNCH generates a reset so the option byte loading is performed under system reset.

Each option bit has also its complement in the same double word. During option loading, a verification of the option bit and its complement allows to check the loading has correctly taken place.

During option byte loading, the options are read by double word with ECC. If the word and its complement are matching, the option word/byte is copied into the option register.

If the comparison between the word and its complement fails, a status bit OPTVERR is set. Mismatch values are forced into the option registers:

- For USR OPT option, the value of mismatch is all options at ‘1’, except for BOR_LEV which is “000” (lowest threshold)
- For WRP option, the value of mismatch is the default value “No protection”
- For RDP option, the value of mismatch is the default value “Level 1”
- For PCROP, the value of mismatch is “all memory protected”

On system reset rising, internal option registers are copied into option registers which can be read and written by software (FLASH_OPTR, FLASH_PCROP1/2SR, FLASH_PCROP1/2ER, FLASH_WRP1/2AR, FLASH_WRP1/2BR). These registers are also used to modify options. If these registers are not modified by user, they reflects the options states of the system. See *Section : Modifying user options* for more details.

3.5 FLASH memory protection

The Flash main memory can be protected against external accesses with the Read protection (RDP). The pages of the Flash memory can also be protected against unwanted write due to loss of program counter contexts. The write-protection (WRP) granularity is one page (2 KByte). Apart of the flash memory can also be protected against read and write from third parties (PCROP). The PCROP granularity is double word (64-bit).

3.5.1 Read protection (RDP)

The read protection is activated by setting the RDP option byte and then, by applying a system reset to reload the new RDP option byte. The read protection protects to the Flash main memory, the option bytes, the backup registers (RTC_BKPxR in the RTC) and the SRAM2.

Note: If the read protection is set while the debugger is still connected through JTAG/SWD, apply a POR (power-on reset) instead of a system reset.

There are three levels of read protection from no protection (level 0) to maximum protection or no debug (level 2).

The Flash memory is protected when the RDP option byte and its complement contain the pair of values shown in *Table 14*.

Table 14. Flash memory read protection status

RDP byte value	RDP complement value	Read protection level
0xAA	0x55	Level 0
Any value except 0xAA or 0xCC	Any value (not necessarily complementary) except 0x55 and 0x33	Level 1
0xCC	0x33	Level 2

The System memory area is read accessible whatever the protection level. It is never accessible for program/erase operation.

Level 0: no protection

Read, program and erase operations into the Flash main memory area are possible. The option bytes, the SRAM2 and the backup registers are also accessible by all operations.

Level 1: Read protection

This is the default protection level when RDP option byte is erased. It is defined as well when RDP value is at any value different from 0xAA and 0xCC, or even if the complement is not correct.

- **User mode:** Code executing in user mode (**Boot Flash**) can access Flash main memory, option bytes, SRAM2 and backup registers with all operations.
- **Debug, boot RAM and boot loader modes:** In debug mode or when code is running from boot RAM or boot loader, the Flash main memory, the backup registers (RTC_BKPxR in the RTC) and the SRAM2 are totally inaccessible. In these modes, a read or write access to the Flash generates a bus error and a Hard Fault interrupt.

Caution: In case the Level 1 is configured and no PCROP area is defined, it is mandatory to set PCROP_RDP bit to 1 (full mass erase when the RDP level is decreased from Level 1 to Level 0). In case the Level 1 is configured and a PCROP area is defined, if user code needs to be protected by RDP but not by PCROP, it must not be placed in a page containing a PCROP area.

Level 2: No debug

In this level, the protection level 1 is guaranteed. In addition, the Cortex®-M4 debug port, the boot from RAM (boot RAM mode) and the boot from System memory (boot loader mode) are no more available. In user execution mode (boot FLASH mode), all operations are allowed on the Flash Main memory. On the contrary, only read operations can be performed on the option bytes.

Option bytes cannot be programmed nor erased. Thus, the level 2 cannot be removed at all: it is an irreversible operation. When attempting to modify the options bytes, the protection error flag WRPERR is set in the Flash_SR register and an interrupt can be generated.

Note: The debug feature is also disabled under reset.

STMicroelectronics is not able to perform analysis on defective parts on which the level 2 protection has been set.

Changing the Read protection level

It is easy to move from level 0 to level 1 by changing the value of the RDP byte to any value (except 0xCC). By programming the 0xCC value in the RDP byte, it is possible to go to level 2 either directly from level 0 or from level 1. Once in level 2, it is no more possible to modify the Read protection level.

When the RDP is reprogrammed to the value 0xAA to move from Level 1 to Level 0, a mass erase of the Flash main memory is performed if PCROP_RDP is set in the *Flash Bank 1 PCROP End address register (FLASH_PCROP1ER)*. The backup registers (RTC_BKPxR in the RTC) and the SRAM2 are also erased. The user options except PCROP protection are set to their previous values copied from FLASH_OPTR, FLASH_WRPxyR (x=1, 2 and y =A or B). PCROP is disable. The OTP area is not affected by mass erase and remains unchanged.

If the bit PCROP_RDP is cleared in the FLASH_PCROP1ER, the full mass erase is replaced by a partial mass erase that is successive page erases in the bank where PCROP is active, except for the pages protected by PCROP. This is done in order to keep the PCROP code. If PCROP is active for both banks, both banks are erased by page erases. Only when both banks are erased, options are re-programmed with their previous values. This is also true for FLASH_PCROPxSR and FLASH_PCROPxER registers (x=1,2).

Note: Full Mass Erase or Partial Mass Erase is performed only when Level 1 is active and Level 0 requested. When the protection level is increased (0->1, 1->2, 0->2) there is no mass erase.

To validate the protection level change, the option bytes must be reloaded through the OBL_LAUNCH bit in Flash control register.

Figure 6. Changing the Read protection (RDP) level

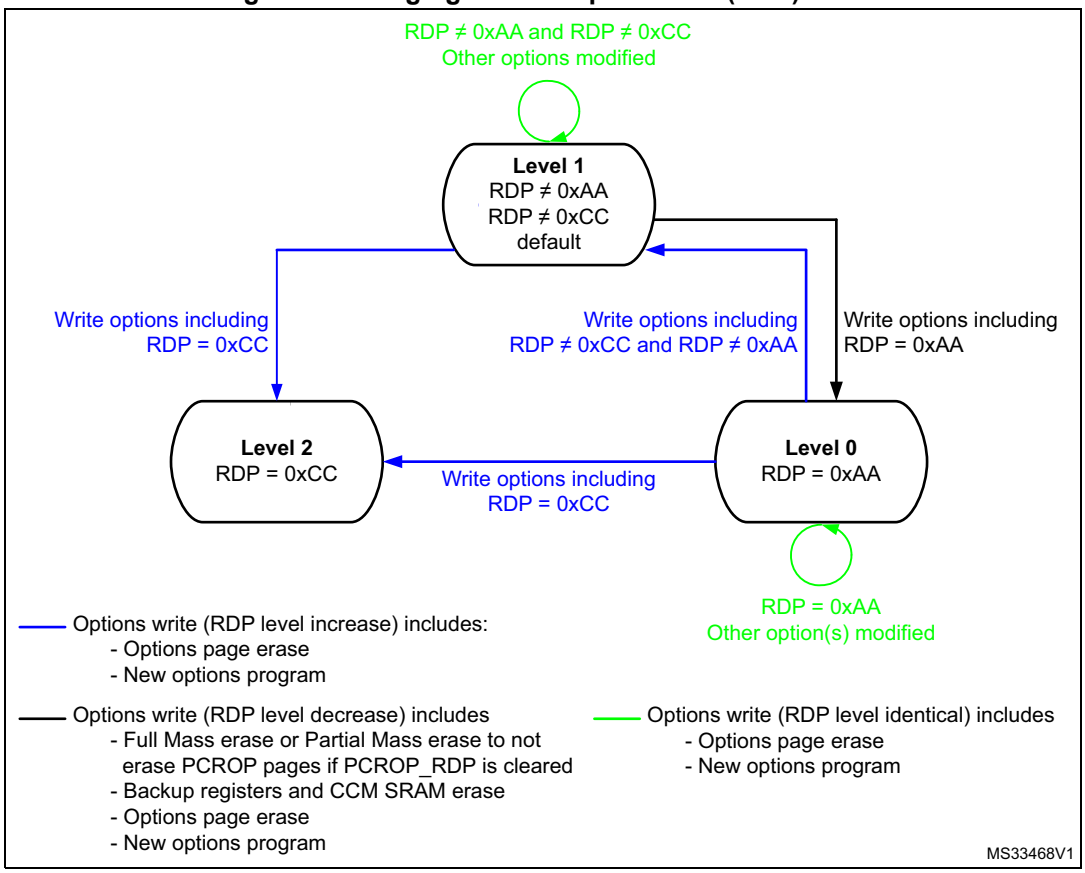

Table 15. Access status versus protection level and execution modes

Area	Protection level	User execution (BootFromFlash)			Debug/ BootFromRam/ BootFromLoader(1)		
		Read	Write	Erase	Read	Write	Erase
Flash main memory	1	Yes	Yes	Yes	No	No	No(3)
	2	Yes	Yes	Yes	N/A	N/A	N/A
System memory (2)	1	Yes	No	No	Yes	No	No
	2	Yes	No	No	N/A	N/A	N/A
Option bytes	1	Yes	Yes(3)	Yes	Yes	Yes(3)	Yes
	2	Yes	No	No	N/A	N/A	N/A

Table 15. Access status versus protection level and execution modes (continued)

Area	Protection level	User execution (BootFromFlash)			Debug/ BootFromRam/ BootFromLoader(1)		
		Read	Write	Erase	Read	Write	Erase
OTP	1	Yes	Yes(4)	N/A	No	No	N/A
	2	Yes	Yes(4)	N/A	N/A	N/A	N/A
Backup registers	1	Yes	Yes	N/A	No	No	No(5)
	2	Yes	Yes	N/A	N/A	N/A	N/A
SRAM2	1	Yes	Yes	N/A	No	No	No(6)
	2	Yes	Yes	N/A	N/A	N/A	N/A

1. When the protection level 2 is active, the Debug port, the boot from RAM and the boot from system memory are disabled.
2. The system memory is only read-accessible, whatever the protection level (0, 1 or 2) and execution mode.
3. The Flash main memory is erased when the RDP option byte is programmed with all level protections disabled (0xAA).
4. OTP can only be written once.
5. The backup registers are erased when RDP changes from level 1 to level 0.
6. The SRAM2 is erased when RDP changes from level 1 to level 0.

3.5.2 Proprietary code readout protection (PCROP)

Apart of the flash memory can be protected against read and write from third parties. The protected area is execute-only: it can only be reached by the STM32 CPU, as an instruction code, while all other accesses (DMA, debug and CPU data read, write and erase) are strictly prohibited. One area per bank can be selected, withdouble word (64-bit) granularity. An additional option bit (PCROP_RDP) allows to select if the PCROP area is erased or not when the RDP protection is changed from Level 1 to Level 0 (refer to *Changing the Read protection level*).

Each PCROP area is defined by a start page offset and an end page offset related to the physical Flash bank base address. These offsets are defined in the PCROP address registers *Flash Bank 1 PCROP Start address register (FLASH_PCROP1SR)*, *Flash Bank 1 PCROP End address register (FLASH_PCROP1ER)*, *Flash Bank 2 PCROP Start address register (FLASH_PCROP2SR)*, *Flash Bank 2 PCROP End address register (FLASH_PCROP2ER)*.

The Bank “x” PCROP (x=1,2) area is defined from the address: *Bank “x” Base address + [PCROPx_STRT x 0x8] (included)* to the address: *Bank “x” Base address + [(PCROPx_END+1) x 0x8] (excluded)*. The minimum PCROP area size is two double-words (128 bits).

For example, to protect by PCROP from the address 0x0806 2F80 (included) to the address 0x0807 0004 (included):

- if boot in flash is done in Bank 1, FLASH_PCROP1SR and FLASH_PCROP1ER registers must be programmed with:
  - PCROP1_STRT = 0xC5F0.
  - PCROP1_END = 0xE000.
- If the two banks are swapped, the protection must apply to bank 2, and FLASH_PCROP2SR and FLASH_PCROP2ER register must be programmed with:
  - PCROP2_STRT = 0xC5F0.
  - PCROP2_END = 0xE000.

Any read access performed through the D-bus to a PCROP protected area will trigger RDERR flag error.

Any PCROP protected address is also write protected and any write access to one of these addresses will trigger WRPERR.

Any PCROP area is also erase protected. Consequently, any erase to a page in this zone is impossible (including the page containing the start address and the end address of this zone). Moreover, a software mass erase cannot be performed if one zone is PCROP protected.

For previous example, due to erase by page, all pages from page 0xC5 to 0xE0 are protected in case of page erase. (All addresses from 0x0806 2800 to 0x0807 07FF can't be erased).

Deactivation of PCROP can only occurs when the RDP is changing from level 1 to level 0. If the user options modification tries to clear PCROP or to decrease the PCROP area, the options programming is launched but PCROP area stays unchanged. On the contrary, it is possible to increase the PCROP area.

When option bit PCROP_RDP is cleared, when the RDP is changing from level 1 to level 0, Full Mass Erase is replaced by Partial Mass Erase in order to keep the PCROP area (refer to *Changing the Read protection level*). In this case, PCROP1/2_STRT and PCROP1/2_END are also not erased.

Note: It is recommended to align PCROP area with page granularity when using PCROP_RDP, or to leave free the rest of the page where PCROP zone starts or ends.

3.5.3 Write protection (WRP)

The user area in Flash memory can be protected against unwanted write operations. Two write-protected (WRP) areas can be defined in each bank, with page (2 KByte) granularity. Each area is defined by a start page offset and an end page offset related to the physical Flash bank base address. These offsets are defined in the WRP address registers: *Flash Bank 1 WRP area A address register (FLASH_WRP1AR)*, *Flash Bank 1 WRP area B address register (FLASH_WRP1BR)*, *Flash Bank 2 WRP area A address register (FLASH_WRP2AR)*, *Flash Bank 2 WRP area B address register (FLASH_WRP2BR)*.

The Bank "x" WRP "y" area (x=1,2 and y=A,B) is defined from the address: *Bank "x" Base address + [WRPxy_STRT x 0x800] (included)* to the address: *Bank "x" Base address + [(WRPxy_END+1) x 0x800] (excluded)*.

For example, to protect by WRP from the address 0x0806 2800 (included) to the address 0x0807 07FF (included):

- if boot in flash is done in Bank 1, FLASH_WRP1AR register must be programmed with:
  - WRP1A_STRT = 0xC5.
  - WRP1A_END = 0xE0.

  WRP1B_STRT and WRP1B_END in FLASH_WRP1BR can be used instead (area “B” in Bank 1).
- If the two banks are swapped, the protection must apply to bank 2, and FLASH_WRP2AR register must be programmed with:
  - WRP2A_STRT = 0xC5.
  - WRP2A_END = 0xE0.

  WRP2B_STRT and WRP2B_END in FLASH_WRP2BR can be used instead (area “B in Bank 2).

When WRP is active, it cannot be erased or programmed. Consequently, a software mass erase cannot be performed if one area is write-protected.

If an erase/program operation to a write-protected part of the Flash memory is attempted, the write protection error flag (WRPERR) is set in the FLASH_SR register. This flag is also set for any write access to:

- OTP area
- part of the Flash memory that can never be written like the ICP
- PCROP area.

Note: When the memory read protection level is selected (RDP level = 1), it is not possible to program or erase Flash memory if the CPU debug features are connected (JTAG or single wire) or boot code is being executed from RAM or System flash, even if WRP is not activated.

Note: To validate the WRP options, the option bytes must be reloaded through the OBL_LAUNCH bit in Flash control register.

3.6 FLASH interrupts

Table 16. Flash interrupt request

Interrupt event	Event flag	Event flag/interrupt clearing method	Interrupt enable control bit
End of operation	EOP(1)	Write EOP=1	EOPIE
Operation error	OPERR(2)	Write OPERR=1	ERRIE
Read error	RDERR	Write RDERR=1	RDERRIE
ECC correction	ECCC	Write ECCC=1	ECCCIE

1. EOP is set only if EOPIE is set.
2. OPERR is set only if ERRIE is set.

3.7 FLASH registers

3.7.1 Flash access control register (FLASH_ACR)

Address offset: 0x00

Reset value: 0x0000 0600

Access: no wait state, word, half-word and byte access

31	30	29	28	27	26	25	24	23	22	21	20	19	18	17	16
Res.	Res.	Res.	Res.	Res.	Res.	Res.	Res.	Res.	Res.	Res.	Res.	Res.	Res.	Res.	Res.

15	14	13	12	11	10	9	8	7	6	5	4	3	2	1	0
Res.	SLEEP_PD	RUN_PD	DCRST	ICRST	DCEN	ICEN	PRFTEN	Res.	Res.	Res.	Res.	Res.	LATENCY[2:0]		
	rw	rw	rw	rw	rw	rw	rw						rw	rw	rw

Bits 31:15 Reserved, must be kept at reset value.

Bit 14 **SLEEP_PD**: Flash Power-down mode during Sleep or Low-power sleep mode

This bit determines whether the flash memory is in Power-down mode or Idle mode when the device is in Sleep or Low-power sleep mode.

0: Flash in Idle mode during Sleep and Low-power sleep modes

1: Flash in Power-down mode during Sleep and Low-power sleep modes

Caution: The flash must not be put in power-down while a program or an erase operation is on-going.

Bit 13 **RUN_PD**: Flash Power-down mode during Run or Low-power run mode

This bit is write-protected with FLASH_PDKEYR.

This bit determines whether the flash memory is in Power-down mode or Idle mode when the device is in Run or Low-power run mode. The flash memory can be put in power-down mode only when the code is executed from RAM. The Flash must not be accessed when RUN_PD is set.

0: Flash in Idle mode

1: Flash in Power-down mode

Caution: The flash must not be put in power-down while a program or an erase operation is on-going.

Bit 12 **DCRST**: Data cache reset

0: Data cache is not reset

1: Data cache is reset

This bit can be written only when the data cache is disabled.

Bit 11 **ICRST**: Instruction cache reset

0: Instruction cache is not reset

1: Instruction cache is reset

This bit can be written only when the instruction cache is disabled.

Bit 10 **DCEN**: Data cache enable

0: Data cache is disabled

1: Data cache is enabled

Bit 9 **ICEN**: Instruction cache enable
0: Instruction cache is disabled
1: Instruction cache is enabled

Bit 8 **PRFTEN:** Prefetch enable
0: Prefetch disabled
1: Prefetch enabled

Bits 7:3 Reserved, must be kept at reset value.

Bits 2:0 **LATENCY[2:0]**: Latency
These bits represent the number of HCLK (AHB clock) period to the Flash access time.
000: Zero wait state
001: One wait state
010: Two wait states
011: Three wait states
100: Four wait states
others: Reserved

3.7.2 Flash Power-down key register (FLASH_PDKEYR)

Address offset: 0x04

Reset value: 0x0000 0000

Access: no wait state, word access

31	30	29	28	27	26	25	24	23	22	21	20	19	18	17	16
PDKEYR[31:16]															
w	w	w	w	w	w	w	w	w	w	w	w	w	w	w	w
15	14	13	12	11	10	9	8	7	6	5	4	3	2	1	0
PDKEYR[15:0]															
w	w	w	w	w	w	w	w	w	w	w	w	w	w	w	w

Bits 31:0 **PDKEYR**: Power-down in Run mode Flash key
The following values must be written consecutively to unlock the RUN_PD bit in FLASH_ACR:
PDKEY1: 0x0415 2637
PDKEY2: 0xFAFB FCFD

3.7.3 Flash key register (FLASH_KEYR)

Address offset: 0x08

Reset value: 0x0000 0000

Access: no wait state, word access

31	30	29	28	27	26	25	24	23	22	21	20	19	18	17	16
KEYR[31:16]															
w	w	w	w	w	w	w	w	w	w	w	w	w	w	w	w
15	14	13	12	11	10	9	8	7	6	5	4	3	2	1	0
KEYR[15:0]															
w	w	w	w	w	w	w	w	w	w	w	w	w	w	w	w

Bits 31:0 **KEYR**: Flash key

The following values must be written consecutively to unlock the FLASH_CR register allowing flash programming/erasing operations:
KEY1: 0x4567 0123
KEY2: 0xCDEF 89AB

3.7.4 Flash option key register (FLASH_OPTKEYR)

Address offset: 0x0C

Reset value: 0x0000 0000

Access: no wait state, word access

31	30	29	28	27	26	25	24	23	22	21	20	19	18	17	16
OPTKEYR[31:16]															
w	w	w	w	w	w	w	w	w	w	w	w	w	w	w	w
15	14	13	12	11	10	9	8	7	6	5	4	3	2	1	0
OPTKEYR[15:0]															
w	w	w	w	w	w	w	w	w	w	w	w	w	w	w	w

Bits 31:0 **OPTKEYR**: Option byte key

The following values must be written consecutively to unlock the FLASH_OPTR register allowing option byte programming/erasing operations:
KEY1: 0x0819 2A3B
KEY2: 0x4C5D 6E7F

3.7.5 Flash status register (FLASH_SR)

Address offset: 0x10

Reset value: 0x0000 0000

Access: no wait state, word, half-word and byte access

31	30	29	28	27	26	25	24	23	22	21	20	19	18	17	16
Res.	Res.	Res.	Res.	Res.	Res.	Res.	Res.	Res.	Res.	Res.	Res.	Res.	Res.	Res.	BSY
															r
15	14	13	12	11	10	9	8	7	6	5	4	3	2	1	0
OPTV ERR	RD ERR	Res.	Res.	Res.	Res.	FAST ERR	MISS ERR	PGS ERR	SIZ ERR	PGA ERR	WRP ERR	PROG ERR	Res.	OP ERR	EOP
rc_w1	rc_w1					rc_w1	rc_w1	rc_w1	rc_w1	rc_w1	rc_w1	rc_w1		rc_w1	rc_w1

Bits 31:17 Reserved, must be kept at reset value.

Bit 16 **BSY**: Busy

This indicates that a Flash operation is in progress. This is set on the beginning of a Flash operation and reset when the operation finishes or when an error occurs.

Bit 15 **OPTVERR**: Option validity error

Set by hardware when the options read may not be the one configured by the user. If option haven't been properly loaded, OPTVERR is set again after each system reset.

Cleared by writing 1.

Bit 14 **RDERR**: PCROP read error

Set by hardware when an address to be read through the D-bus belongs to a read protected area of the flash (PCROP protection). An interrupt is generated if RDERRIE is set in FLASH_CR.

Cleared by writing 1.

Bits 13:10 Reserved, must be kept at reset value.

Bit 9 **FASTERR**: Fast programming error

Set by hardware when a fast programming sequence (activated by FSTPG) is interrupted due to an error (alignment, size, write protection or data miss). The corresponding status bit (PGAERR, SIZERR, WRPERR or MISSERR) is set at the same time.

Cleared by writing 1.

Bit 8 **MISERR**: Fast programming data miss error

In Fast programming mode, 32 double words must be sent to flash successively, and the new data must be sent to the flash logic control before the current data is fully programmed. MISSERR is set by hardware when the new data is not present in time.

Cleared by writing 1.

Bit 7 **PGSERR**: Programming sequence error

Set by hardware when a write access to the Flash memory is performed by the code while PG or FSTPG have not been set previously. Set also by hardware when PROGERR, SIZERR, PGAERR, MISSERR or FASTERR is set due to a previous programming error.

Cleared by writing 1.

Bit 6 **SIZERR**: Size error

Set by hardware when the size of the access is a byte or half-word during a program or a fast program sequence. Only double word programming is allowed (consequently: word access).
Cleared by writing 1.

Bit 5 **PGAERR**: Programming alignment error

Set by hardware when the data to program cannot be contained in the same 64-bit Flash memory row in case of standard programming, or if there is a change of page during fast programming.
Cleared by writing 1.

Bit 4 **WRPERR**: Write protection error

Set by hardware when an address to be erased/programmed belongs to a write-protected part (by WRP, PCROP or RDP level 1) of the Flash memory.
Cleared by writing 1.

Bit 3 **PROGERR**: Programming error

Set by hardware when a double-word address to be programmed contains a value different from '0xFFFF FFFF' before programming, except if the data to write is '0x0000 0000'.
Cleared by writing 1.

Bit 2 Reserved, must be kept at reset value.

Bit 1 **OPERR**: Operation error

Set by hardware when a Flash memory operation (program / erase) completes unsuccessfully.
This bit is set only if error interrupts are enabled (ERRIE = 1).
Cleared by writing ‘1’.

Bit 0 **EOP**: End of operation

Set by hardware when one or more Flash memory operation (programming / erase) has been completed successfully.
This bit is set only if the end of operation interrupts are enabled (EOPIE = 1).
Cleared by writing 1.

3.7.6 Flash control register (FLASH_CR)

Address offset: 0x14

Reset value: 0xC000 0000

Access: no wait state when no Flash memory operation is on going, word, half-word and byte access

31	30	29	28	27	26	25	24	23	22	21	20	19	18	17	16
LOCK	OPT LOCK	Res.	Res.	OBL_ LAUNCH	RD ERRIE	ERR IE	EOP IE	Res.	Res.	Res.	Res.	Res.	FSTPG	OPT STRT	STRT
rs	rs			rc_w1	rw	rw	rw						rw	rs	rs

15	14	13	12	11	10	9	8	7	6	5	4	3	2	1	0
MER2	Res.	Res.	Res.	BKER	PNB[7:0]								MER1	PER	PG
rw				rw	rw	rw	rw	rw	rw	rw	rw	rw	rw	rw	rw

Bit 31 **LOCK:** FLASH_CR Lock

This bit is set only. When set, the FLASH_CR register is locked. It is cleared by hardware after detecting the unlock sequence.
In case of an unsuccessful unlock operation, this bit remains set until the next system reset.

Bit 30 **OPTLOCK:** Options Lock

This bit is set only. When set, all bits concerning user option in FLASH_CR register and so option page are locked. This bit is cleared by hardware after detecting the unlock sequence. The LOCK bit must be cleared before doing the unlock sequence for OPTLOCK bit.
In case of an unsuccessful unlock operation, this bit remains set until the next reset.

Bits 29:28 Reserved, must be kept at reset value.

Bit 27 **OBL_LAUNCH**: Force the option byte loading

When set to 1, this bit forces the option byte reloading. This bit is cleared only when the option byte loading is complete. It cannot be written if OPTLOCK is set.
0: Option byte loading complete
1: Option byte loading requested

Bit 26 **RDERRIE**: PCROP read error interrupt enable

This bit enables the interrupt generation when the RDERR bit in the FLASH_SR is set to 1.
0: PCROP read error interrupt disabled
1: PCROP read error interrupt enabled

Bit 25 **ERRIE**: Error interrupt enable

This bit enables the interrupt generation when the OPERR bit in the FLASH_SR is set to 1.
0: OPERR error interrupt disabled
1: OPERR error interrupt enabled

Bit 24 **EOPIE**: End of operation interrupt enable

This bit enables the interrupt generation when the EOP bit in the FLASH_SR is set to 1.
0: EOP Interrupt disabled
1: EOP Interrupt enabled

Bits 23:19 Reserved, must be kept at reset value

Bit 18 **FSTPG**: Fast programming

0: Fast programming disabled
1: Fast programming enabled

Bit 17 **OPTSTRT**: Options modification start

This bit triggers an options operation when set.
This bit is set only by software, and is cleared when the BSY bit is cleared in FLASH_SR.

Bit 16 **STRT**: Start

This bit triggers an erase operation when set. If MER1, MER2 and PER bits are reset and the STRT bit is set, an unpredictable behavior may occur without generating any error flag. This condition should be forbidden.
This bit is set only by software, and is cleared when the BSY bit is cleared in FLASH_SR.

Bit 15 **MER2**: Bank 2 Mass erase
This bit triggers the bank 2 mass erase (all bank 2 user pages) when set.

Bits 14:12 Reserved, must be kept at reset value.

Bit 11 **BKER**: Page number MSB (Bank selection)
0: Bank 1 is selected for page erase
1: Bank 2 is selected for page erase

Bits 10:3 **PNB[7:0]**: Page number selection
These bits select the page to erase:
If BKER = 0:
00000000: page 0
00000001: page 1
...
11111111: page 255
If BKER=1
00000000: page 256
00000001: page 257
...
11111111: page 511

Bit 2 **MER1**: Bank 1 Mass erase
This bit triggers the bank 1 mass erase (all bank 1 user pages) when set.

Bit 1 **PER**: Page erase
0: page erase disabled
1: page erase enabled

Bit 0 **PG**: Programming
0: Flash programming disabled
1: Flash programming enabled

3.7.7 Flash ECC register (FLASH_ECCR)

Address offset: 0x18

Reset value: 0x0000 0000

Access: no wait state when no Flash memory operation is on going, word, half-word and byte access

31	30	29	28	27	26	25	24	23	22	21	20	19	18	17	16
ECCD	ECCC	Res.	Res.	Res.	Res.	Res.	ECCC IE	Res.	Res.	Res.	SYSF_ ECC	BK _ECC	ADDR_ECC[18:16]		
rc_w1	rc_w1						rw				r	r	r	r	r

15	14	13	12	11	10	9	8	7	6	5	4	3	2	1	0
ADDR_ECC[15:0]															
r	r	r	r	r	r	r	r	r	r	r	r	r	r	r	r

Bit 31 **ECCD**: ECC detection

Set by hardware when two ECC errors have been detected. When this bit is set, a NMI is generated

Cleared by writing 1.

Bit 30 **ECCC**: ECC correction

Set by hardware when one ECC error has been detected and corrected. An interrupt is generated if ECCIE is set.

Cleared by writing 1.

Bits 29:25 Reserved, must be kept at reset value.

Bit 24 **ECCIE**: ECC correction interrupt enable

0: ECCC interrupt disabled

1: ECCC interrupt enabled.

Bits 23:21 Reserved, must be kept at reset value.

Bit 20 **SYSF_ECC**: System Flash ECC fail

This bit indicates that the ECC error correction or double ECC error detection is located in the System Flash.

Bit 19 **BK_ECC**: ECC fail bank

This bit indicates which bank is concerned by the ECC error correction or by the double ECC error detection.

0: bank 1

1: bank 2

Bits 18:0 **ADDR_ECC**: ECC fail address

This bit indicates which address in the bank is concerned by the ECC error correction or by the double ECC error detection.

3.7.8 Flash option register (FLASH_OPTR)

Address offset: 0x20

Reset value: 0xXXXX XXXX. Register bits 0 to 31 are loaded with values from Flash memory at OBL.

Access: no wait state when no Flash memory operation is on going; word, half-word and byte access

31	30	29	28	27	26	25	24	23	22	21	20	19	18	17	16
Res.	Res.	Res.	Res.	n BOOT0	nSW BOOT0	SRAM2 _RST	SRAM2 _PE	nBOOT 1	Res.	DUAL BANK	BFB2	WWDG _SW	IWGD_ STDBY	IWDG_ StOP	IWDG_ SW
				rw	rw	rw	rw	rw		rw	rw	rw	rw	rw	rw

15	14	13	12	11	10	9	8	7	6	5	4	3	2	1	0
Res.	nRST_ SHDW	nRST_ STDBY	nRST_ STOP	Res.	BOR_LEV[2:0]			RDP[7:0]							
	rw	rw	rw		rw	rw	rw	rw	rw	rw	rw	rw	rw	rw	rw

Bits 31:28 Reserved, must be kept at reset value.

Bit 27 **nBOOT0:** nBOOT0 option bit (this bit is reserved for STM32L47x/L48x devices)
0: nBOOT0 = 0
1: nBOOT0 = 1

Bit 26 **nSWBOOT0:** Software BOOT0 (this bit is reserved for STM32L47x/L48x devices)
0: BOOT0 taken from the option bit nBOOT0
1: BOOT0 taken from PH3/BOOT0 pin

Bit 25 **SRAM2_RST:** SRAM2 Erase when system reset
0: SRAM2 erased when a system reset occurs
1: SRAM2 is not erased when a system reset occurs

Bit 24 **SRAM2_PE:** SRAM2 parity check enable
0: SRAM2 parity check enable
1: SRAM2 parity check disable

Bit 23 **nBOOT1:** Boot configuration
Together with the BOOT0 pin, this bit selects boot mode from the Flash main memory, SRAM1 or the System memory. Refer to *Section 2.6: Boot configuration*.

Bit 22 Reserved, must be kept at reset value.

Bit 21 **DUALBANK:** Dual-Bank on 512 KB or 256 KB Flash memory devices
0: 256 KB/512 KB Single-bank Flash: Contiguous addresses in Bank 1
1: 256 KB/512 KB Dual-bank Flash: Refer to *Table 9* and *Table 10*.

Bit 20 **BFB2:** Dual-bank boot
0: Dual-bank boot disable
1: Dual-bank boot enable

Bit 19 **WWDG_SW:** Window watchdog selection
0: Hardware window watchdog
1: Software window watchdog

Bit 18 **IWDG_STDBY:** Independent watchdog counter freeze in Standby mode
0: Independent watchdog counter is frozen in Standby mode
1: Independent watchdog counter is running in Standby mode

Bit 17 **IWDG_STOP:** Independent watchdog counter freeze in Stop mode
0: Independent watchdog counter is frozen in Stop mode
1: Independent watchdog counter is running in Stop mode

Bit 16 **IDWG_SW:** Independent watchdog selection
0: Hardware independent watchdog
1: Software independent watchdog

Bit 15 Reserved, must be kept at reset value

Bit 14 **nRST_SHDW**
0: Reset generated when entering the Shutdown mode
1: No reset generated when entering the Shutdown mode

Bit 13 **nRST_STDBY**
0: Reset generated when entering the Standby mode
1: No reset generate when entering the Standby mode

Bit 12 **nRST_STOP**

0: Reset generated when entering the Stop mode
1: No reset generated when entering the Stop mode

Bit 11 Reserved, must be kept at reset value

Bits10:8 **BOR_LEV:** BOR reset Level

These bits contain the VDD supply level threshold that activates/releases the reset.
000: BOR Level 0. Reset level threshold is around 1.7 V
001: BOR Level 1. Reset level threshold is around 2.0 V
010: BOR Level 2. Reset level threshold is around 2.2 V
011: BOR Level 3. Reset level threshold is around 2.5 V
100: BOR Level 4. Reset level threshold is around 2.8 V

Bits 7:0 **RDP:** Read protection level

0xAA: Level 0, read protection not active
0xCC: Level 2, chip read protection active
Others: Level 1, memories read protection active

Note: Take care about PCROP_RDP configuration in Level 1. Refer to Section : Level 1: Read protection for more details.

3.7.9 Flash Bank 1 PCROP Start address register (FLASH_PCROP1SR)

Address offset: 0x24

Reset value: 0xFFFF XXXX. Register bits are loaded with values from Flash memory at OBL. Reserved bits are read as “1”.

Access: no wait state when no Flash memory operation is on going; word, half-word access.

31	30	29	28	27	26	25	24	23	22	21	20	19	18	17	16
Res.	Res.	Res.	Res.	Res.	Res.	Res.	Res.	Res.	Res.	Res.	Res.	Res.	Res.	Res.	Res.

15	14	13	12	11	10	9	8	7	6	5	4	3	2	1	0
PCROP1_STRT[15:0]															
rw	rw	rw	rw	rw	rw	rw	rw	rw	rw	rw	rw	rw	rw	rw	rw

Bits 31:16 Reserved, must be kept at reset value

Bits 15:0 **PCROP1_STRT:** Bank 1 PCROP area start offset

PCROP1_STRT contains the first double-word of the PCROP area.

3.7.10 Flash Bank 1 PCROP End address register (FLASH_PCROP1ER)

Address offset: 0x28

Reset value: 0xXFFF XXXX. Register bits are loaded with values from Flash memory at OBL. Reserved bits are read as “1”.

Access: no wait state when no Flash memory operation is on going; word, half-word access. PCROP_RDP bit can be accessed with byte access.

31	30	29	28	27	26	25	24	23	22	21	20	19	18	17	16
PCROP_RDP	Res.	Res.	Res.	Res.	Res.	Res.	Res.	Res.	Res.	Res.	Res.	Res.	Res.	Res.	Res.
rs															
15	14	13	12	11	10	9	8	7	6	5	4	3	2	1	0
PCROP1_END[15:0]															
rw	rw	rw	rw	rw	rw	rw	rw	rw	rw	rw	rw	rw	rw	rw	rw

Bit 31 **PCROP_RDP:** PCROP area preserved when RDP level decreased

This bit is set only. It is reset after a full mass erase due to a change of RDP from Level 1 to Level 0.

0: PCROP area is not erased when the RDP level is decreased from Level 1 to Level 0.

1: PCROP area is erased when the RDP level is decreased from Level 1 to Level 0 (full mass erase).

Bits 30:16 Reserved, must be kept at reset value

Bits 15:0 **PCROP1_END:** Bank 1 PCROP area end offset

PCROP1_END contains the last double-word of the bank 1 PCROP area.

3.7.11 Flash Bank 1 WRP area A address register (FLASH_WRP1AR)

Address offset: 0x2C

Reset value: 0xFFXX FFXX. Register bits are loaded with values from Flash memory at OBL. Reserved bits are read as “1”.

Access: no wait state when no Flash memory operation is on going; word, half-word and byte access

31	30	29	28	27	26	25	24	23	22	21	20	19	18	17	16
Res.	Res.	Res.	Res.	Res.	Res.	Res.	Res.	WRP1A_END[7:0]							
								rw	rw	rw	rw	rw	rw	rw	rw
15	14	13	12	11	10	9	8	7	6	5	4	3	2	1	0
Res.	Res.	Res.	Res.	Res.	Res.	Res.	Res.	WRP1A_STRT[7:0]							
								rw	rw	rw	rw	rw	rw	rw	rw

Bits 31:24 Reserved, must be kept at reset value

Bits 23:16 **WRP1A_END:** Bank 1 WRP first area “A” end offset
WRP1A_END contains the last page of the Bank 1 WRP first area.

Bits 15:8 Reserved, must be kept at reset value

Bits 7:0 **WRP1A_STRT:** Bank 1 WRP first area “A” start offset
WRP1A_STRT contains the first page of the Bank 1 WRP first area.

3.7.12 Flash Bank 1 WRP area B address register (FLASH_WRP1BR)

Address offset: 0x30

Reset value: 0xFFXX FFXX. Register bits are loaded with values from Flash memory at OBL. Reserved bits are read at “1”.

Access: no wait state when no Flash memory operation is on going; word, half-word and byte access

31	30	29	28	27	26	25	24	23	22	21	20	19	18	17	16
Res.	Res.	Res.	Res.	Res.	Res.	Res.	Res.	WRP1B_END[7:0]							
								rw	rw	rw	rw	rw	rw	rw	rw
15	14	13	12	11	10	9	8	7	6	5	4	3	2	1	0
Res.	Res.	Res.	Res.	Res.	Res.	Res.	Res.	WRP1B_STRT[7:0]							
								rw	rw	rw	rw	rw	rw	rw	rw

Bits 31:24 Reserved, must be kept at reset value

Bits 23:16 **WRP1B_END:** Bank 1 WRP second area “B” end offset
WRP1B_END contains the last page of the Bank 1 WRP second area.

Bits 15:8 Reserved, must be kept at reset value

Bits 7:0 **WRP1B_STRT:** Bank 1 WRP second area “B” start offset
WRP1B_STRT contains the first page of the Bank 1 WRP second area.

3.7.13 Flash Bank 2 PCROP Start address register (FLASH_PCROP2SR)

Address offset: 0x44

Reset value: 0xFFFF XXXX

Access: no wait state when no Flash memory operation is on going; word, half-word access.

31	30	29	28	27	26	25	24	23	22	21	20	19	18	17	16
Res.	Res.	Res.	Res.	Res.	Res.	Res.	Res.	Res.	Res.	Res.	Res.	Res.	Res.	Res.	Res.
15	14	13	12	11	10	9	8	7	6	5	4	3	2	1	0
PCROP2_STRT[15:0]															
rw	rw	rw	rw	rw	rw	rw	rw	rw	rw	rw	rw	rw	rw	rw	rw

Bits 31:16 Reserved, must be kept at reset value

Bits 15:0 **PCROP2_STRT:** Bank 2 PCROP area start offset
PCROP2_STRT contains the first double-word of the Bank 2 PCROP area.

3.7.14 Flash Bank 2 PCROP End address register (FLASH_PCROP2ER)

Address offset: 0x48

Reset value: 0xFFFF XXXX

Access: no wait state when no Flash memory operation is on going; word, half-word access

31	30	29	28	27	26	25	24	23	22	21	20	19	18	17	16
Res.	Res.	Res.	Res.	Res.	Res.	Res.	Res.	Res.	Res.	Res.	Res.	Res.	Res.	Res.	Res.
15	14	13	12	11	10	9	8	7	6	5	4	3	2	1	0
PCROP2_END[15:0]															
rw	rw	rw	rw	rw	rw	rw	rw	rw	rw	rw	rw	rw	rw	rw	rw

Bits 31:16 Reserved, must be kept at reset value

Bits 15:0 **PCROP2_END:** Bank 2 PCROP area end offset
PCROP2_END contains the last double-word of the bank 2 PCROP area.

3.7.15 Flash Bank 2 WRP area A address register (FLASH_WRP2AR)

Address offset: 0x4C

Reset value: 0xFFXX FFXX

Access: no wait state when no Flash memory operation is on going; word, half-word and byte access

31	30	29	28	27	26	25	24	23	22	21	20	19	18	17	16
Res.	Res.	Res.	Res.	Res.	Res.	Res.	Res.	WRP2A_END[7:0]							
								rw	rw	rw	rw	rw	rw	rw	rw
15	14	13	12	11	10	9	8	7	6	5	4	3	2	1	0
Res.	Res.	Res.	Res.	Res.	Res.	Res.	Res.	WRP2A_STRT[7:0]							
								rw	rw	rw	rw	rw	rw	rw	rw

Bits 31:24 Reserved, must be kept at reset value

Bits 23:16 **WRP2A_END:** Bank 2 WRP first area “A” end offset
WRP2A_END contains the last page of the bank 2 WRP first area.

Bits 15:8 Reserved, must be kept at reset value

Bits 7:0 **WRP2A_STRT:** Bank 2 WRP first area “A” start offset
WRP2A_STRT contains the first page of the bank 2 WRP first area.

3.7.16 Flash Bank 2 WRP area B address register (FLASH_WRP2BR)

Address offset: 0x50

Reset value: 0xFFXX FFXX

Access: no wait state when no Flash memory operation is on going; word, half-word and byte access

31	30	29	28	27	26	25	24	23	22	21	20	19	18	17	16
Res.	Res.	Res.	Res.	Res.	Res.	Res.	Res.	WRP2B_END[7:0]							
								rw	rw	rw	rw	rw	rw	rw	rw
15	14	13	12	11	10	9	8	7	6	5	4	3	2	1	0
Res.	Res.	Res.	Res.	Res.	Res.	Res.	Res.	WRP2B_STRT[7:0]							
								rw	rw	rw	rw	rw	rw	rw	rw

Bits 31:24 Reserved, must be kept at reset value

Bits 23:16 **WRP2B_END:** Bank 2 WRP second area “B” end offset
WRP2B_END contains the last page of the bank 2 WRP second area.

Bits 15:8 Reserved, must be kept at reset value

Bits 7:0 **WRP2B_STRT:** Bank 2 WRP second area “B” start offset
WRP2B_STRT contains the first page of the bank 2 WRP second area.

3.7.17 FLASH register map

Table 17. Flash interface - register map and reset values

Offset	Register	31	30	29	28	27	26	25	24	23	22	21	20	19	18	17	16	15	14	13	12	11	10	9	8	7	6	5	4	3	2	1	0
0x00	FLASH_ACR	Res.	Res.	Res.	Res.	Res.	Res.	Res.	Res.	Res.	Res.	Res.	Res.	Res.	Res.	Res.	Res.	Res.	SLEEP_PD	RUN_PD	DCRST	ICRST	DCEN	ICEN	PRFTEN	Res.	Res.	Res.	Res.	Res.	LATENCY [2:0]		
	Reset value																		0	0	0	0	1	1	0						0	0	0
0x04	FLASH_ PDKEYR	PDKEYR[31:0]																															
	Reset value	0	0	0	0	0	0	0	0	0	0	0	0	0	0	0	0	0	0	0	0	0	0	0	0	0	0	0	0	0	0	0	0
0x08	FLASH_KEYR	KEYR[31:0]																															
	Reset value	0	0	0	0	0	0	0	0	0	0	0	0	0	0	0	0	0	0	0	0	0	0	0	0	0	0	0	0	0	0	0	0
0x0C	FLASH_OPT KEYR	OPTKEYR[31:0]																															
	Reset value	0	0	0	0	0	0	0	0	0	0	0	0	0	0	0	0	0	0	0	0	0	0	0	0	0	0	0	0	0	0	0	0
0x10	FLASH_SR	Res.	Res.	Res.	Res.	Res.	Res.	Res.	Res.	Res.	Res.	Res.	Res.	Res.	Res.	Res.	BSY	OPTVERR	RDERR	Res.	Res.	Res.	Res.	FASTERR	MISERR	PGSERR	SIZERR	PGAERR	WRPERR	PROGERR	Res.	OPERR	EOP
	Reset value															X	0	0	0					0	0	0	0	0	0	0		0	0
0x14	FLASH_CR	LOCK	OPTLOCK	Res.	Res.	OBL_LAUNCH	RDERRIE	ERRIE	EOPIE	Res.	Res.	Res.	Res.	Res.	FSTPG	OPTSTRT	STRT	MER2	Res.	Res.	Res.	BKER	PNB[7:0]								MER1	PER	PG
	Reset value	1	1			0	0	0	0						0	0	0	0				0	0	0	0	0	0	0	0	0	0	0	0
0x18	FLASH_ECCR	ECCD	ECCC	Res.	Res.	Res.	Res.	Res.	ECCCIE	Res.	Res.	Res.	SYSF_ECC	BK_ECC	ADDR_ECC[18:0]																		
	Reset value	0	0						0				0	0	0	0	0	0	0	0	0	0	0	0	0	0	0	0	0	0	0	0	0
0x20	FLASH_OPTR	Res.	Res.	Res.	Res.	nBOOT0	nSWBOOT0	SRAM2_RST	SRAM2_PE	nBOOT1	Res.	DUALBANK	BFB2	WWDG_SW	IWDG_STBY	IWDG_STOP	IWDG_SW	Res.	nRST_SHDW	nRST_STDB	nRST_STOP	Res.	BOR_ LEV[2:0]			RDP[7:0]							
	Reset value	X	X	X	X	X	X	X	X	X	X	X	X	X	X	X	X	X	X	X	X	X	X	X	X	X	X	X	X	X	X	X	X
0x24	FLASH_ PCROP1SR	Res.	Res.	Res.	Res.	Res.	Res.	Res.	Res.	Res.	Res.	Res.	Res.	Res.	Res.	Res.	Res.	PCROP1_STRT[15:0]															
	Reset value																	X	X	X	X	X	X	X	X	X	X	X	X	X	X	X	X
0x28	FLASH_ PCROP1ER	PCROP_RDP	Res.	Res.	Res.	Res.	Res.	Res.	Res.	Res.	Res.	Res.	Res.	Res.	Res.	Res.	Res.	PCROP1_END[15:0]															
	Reset value	X																X	X	X	X	X	X	X	X	X	X	X	X	X	X	X	X
0x2C	FLASH_ WRP1AR	Res.	Res.	Res.	Res.	Res.	Res.	Res.	Res.	WRP1A_END[7:0]								Res.	Res.	Res.	Res.	Res.	Res.	Res.	Res.	WRP1A_STRT[7:0]							
	Reset value									X	X	X	X	X	X	X	X									X	X	X	X	X	X	X	X

Table 17. Flash interface - register map and reset values (continued)

Offset	Register	31	30	29	28	27	26	25	24	23	22	21	20	19	18	17	16	15	14	13	12	11	10	9	8	7	6	5	4	3	2	1	0
0x30	FLASH_ WRP1BR	Res.	Res.	Res.	Res.	Res.	Res.	Res.	Res.	WRP1B_END[7:0]								Res.	Res.	Res.	Res.	Res.	Res.	Res.	Res.	WRP1B_STRT[7:0]							
	Reset value									X	X	X	X	X	X	X	X									X	X	X	X	X	X	X	X
0x44	FLASH_ PCROP2SR	Res.	Res.	Res.	Res.	Res.	Res.	Res.	Res.	Res.	Res.	Res.	Res.	Res.	Res.	Res.	Res.	PCROP2_STRT[15:0]															
	Reset value																	X	X	X	X	X	X	X	X	X	X	X	X	X	X	X	X
0x48	FLASH_ PCROP2ER	Res.	Res.	Res.	Res.	Res.	Res.	Res.	Res.	Res.	Res.	Res.	Res.	Res.	Res.	Res.	Res.	PCROP2_END[15:0]															
	Reset value																	X	X	X	X	X	X	X	X	X	X	X	X	X	X	X	X
0x4C	FLASH_ WRP2AR	Res.	Res.	Res.	Res.	Res.	Res.	Res.	Res.	WRP2A_END[7:0]								Res.	Res.	Res.	Res.	Res.	Res.	Res.	Res.	WRP2A_STRT[7:0]							
	Reset value									X	X	X	X	X	X	X	X									X	X	X	X	X	X	X	X
0x50	FLASH_ WRP2BR	Res.	Res.	Res.	Res.	Res.	Res.	Res.	Res.	WRP2B_END[7:0]								Res.	Res.	Res.	Res.	Res.	Res.	Res.	Res.	WRP2B_STRT[7:0]							
	Reset value									X	X	X	X	X	X	X	X									X	X	X	X	X	X	X	X

Refer to *Section 2.2 on page 75* for the register boundary addresses.

4 Firewall (FW)

4.1 Introduction

The Firewall is made to protect a specific part of code or data into the Non-Volatile Memory, and/or to protect the Volatile data into the SRAM1 from the rest of the code executed outside the protected area.

4.2 Firewall main features

- The code to protect by the Firewall (Code Segment) may be located in:
  - The Flash memory map
  - The SRAM1 memory, if declared as an executable protected area during the Firewall configuration step.
- The data to protect can be located either
  - in the Flash memory (non-volatile data segment)
  - in the SRAM1 memory (volatile data segment)

The software can access these protected areas once the Firewall is opened. The Firewall can be opened or closed using a mechanism based on “call gate” (Refer to *Opening the Firewall*).

The start address of each segment and its respective length must be configured before enabling the Firewall (Refer to *Section 4.3.5: Firewall initialization*).

Each illegal access into these protected segments (if the Firewall is enabled) generates a reset which immediately kills the detected intrusion.

Any DMA access to protected segments is forbidden whatever the Firewall state (opened or closed). It is considered as an illegal access and generates a reset.

4.3 Firewall functional description

4.3.1 Firewall AMBA bus snoop

The Firewall peripheral is snooping the AMBA buses on which the memories (volatile and non-volatile) are connected. A global architecture view is illustrated in *Figure 7*.

Figure 7. STM32L47x/L48x/L49x/L4Ax firewall connection schematics

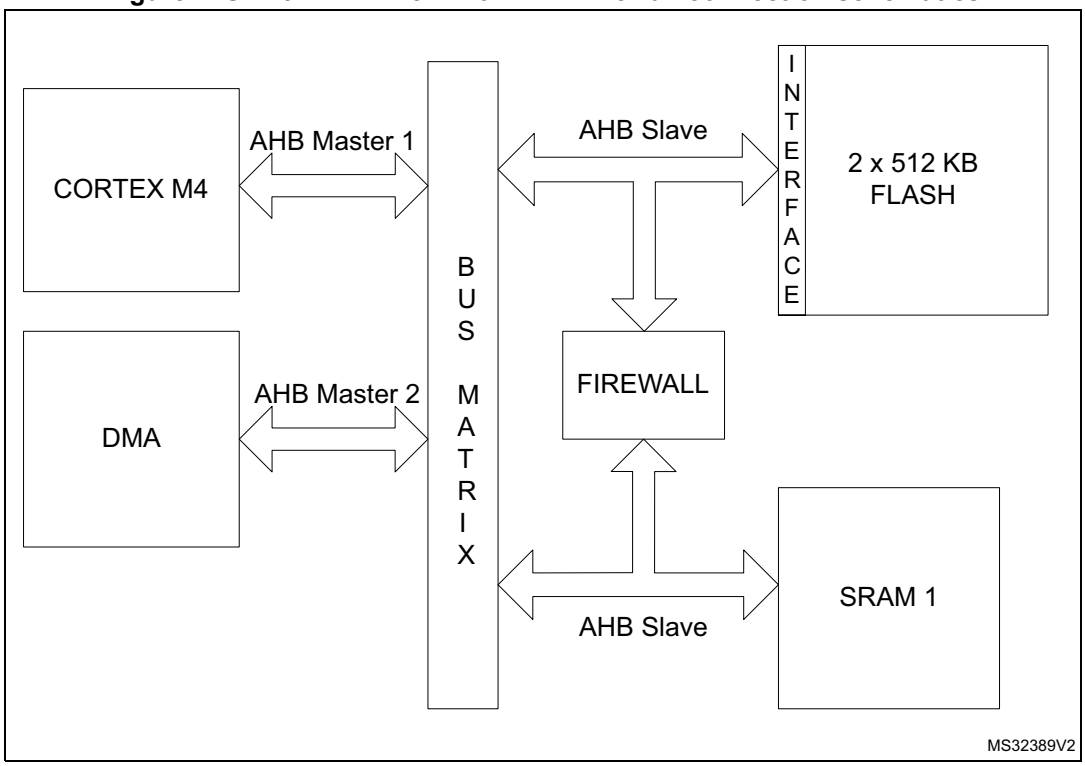

4.3.2 Functional requirements

There are several requirements to guaranty the highest security level by the application code/data which needs to be protected by the Firewall and to avoid unwanted Firewall alarm (reset generation).

Debug consideration

In debug mode, if the Firewall is opened, the accesses by the debugger to the protected segments are not blocked. For this reason, the Read out level 2 protection must be active in conjunction with the Firewall implementation.

If the debug is needed, it is possible to proceed in the following way:

- A dummy code having the same API as the protected code may be developed during the development phase of the final user code. This dummy code may send back coherent answers (in terms of function and potentially timing if needed), as the protected code should do in production phase.
- In the development phase, the protected code can be given to the customer-end under NDA agreement and its software can be developed in level 0 protection. The customer-

end code needs to embed an IAP located in a write protected segment in order to allow future code updates when the production parts will be Level 2 ROP.

Write protection

In order to offer a maximum security level, the following points need to be respected:

- It is mandatory to keep a write protection on the part of the code enabling the Firewall. This activation code should be located outside the segments protected by the Firewall.
- The write protection is also mandatory on the code segment protected by the Firewall.
- The page including the reset vector must be write-protected.

Interrupts management

The code protected by the Firewall must not be interruptible. It is up to the user code to disable any interrupt source before executing the code protected by the Firewall. If this constraint is not respected, if an interrupt comes while the protected code is executed (Firewall opened), the Firewall will be closed as soon as the interrupt subroutine is executed. When the code returns back to the protected code area, a Firewall alarm will raise since the “call gate” sequence will not be applied and a reset will be generated.

Concerning the interrupt vectors and the first user page in the Flash memory:

- If the first user page (including the reset vector) is protected by the Firewall, the NVIC vector should be reprogrammed outside the protected segment.
- If the first user page is not protected by the Firewall, the interrupt vectors may be kept at this location.

There is no interrupt generated by the Firewall.

4.3.3 Firewall segments

The Firewall has been designed to protect three different segment areas:

Code segment

This segment is located into the Flash memory. It should contain the code to execute which requires the Firewall protection. The segment must be reached using the “call gate” entry sequence to open the Firewall. A system reset is generated if the “call gate” entry sequence is not respected (refer to *Opening the Firewall*) and if the Firewall is enabled using the FWDIS bit in the system configuration register. The length of the segment and the segment base address must be configured before enabling the Firewall (refer to *Section 4.3.5: Firewall initialization*).

Non-volatile data segment

This segment contains non-volatile data used by the protected code which must be protected by the Firewall. The access to this segment is defined into *Section 4.3.4: Segment accesses and properties*. The Firewall must be opened before accessing the data in this area. The Non-Volatile data segment should be located into the Flash memory. The segment length and the base address of the segment must be configured before enabling the Firewall (refer to *Section 4.3.5: Firewall initialization*).

Volatile data segment

Volatile data used by the protected code located into the code segment must be defined into the SRAM1 memory. The access to this segment is defined into the *Section 4.3.4: Segment accesses and properties*. Depending on the Volatile data segment configuration, the Firewall must be opened or not before accessing this segment area. The segment length and the base address of the segment as well as the segment options must be configured before enabling the Firewall (refer to *Section 4.3.5: Firewall initialization*).

The Volatile data segment can also be defined as executable (for the code execution) or shared using two bit of the Firewall configuration register (bit VDS for the volatile data sharing option and bit VDE for the volatile data execution capability). For more details, refer to *Table 18*.

4.3.4 Segment accesses and properties

All DMA accesses to the protected segments are forbidden, whatever the Firewall state, and generate a system reset.

Segment access depending on the Firewall state

Each of the three segments has specific properties which are presented in *Table 18*.

Table 18. Segment accesses according to the Firewall state

Segment	Firewall opened access allowed	Firewall closed access allowed	Firewall disabled access allowed
Code segment	Read and execute	No access allowed. Any access to the segment (except the “call gate” entry) generates a system reset	All accesses are allowed (according to the Flash page protection properties in which the code is located)
Non-volatile data segment	Read and write	No access allowed	All accesses are allowed (according to the Flash page protection properties in which the code is located)
Volatile data segment	Read and Write Execute if VDE = 1 and VDS = 0 into the Firewall configuration register	No access allowed if VDS = 0 and VDE = 0 into the Firewall configuration register Read/write/execute accesses allowed if VDS = 1 (whatever VDE bit value) Execute if VDE = 1 and VDS = 0 but with a “call gate” entry to open the Firewall at first.	All accesses are allowed

The Volatile data segment is a bit different from the two others. The segment can be:

- Shared (VDS bit in the register)

  It means that the area and the data located into this segment can be shared between the protected code and the user code executed in a non-protected area. The access is allowed whether the Firewall is opened or closed or disabled.

  The VDS bit gets priority over the VDE bit, this last bit value being ignored in such a case. It means that the Volatile data segment can execute parts of code located there without any need to open the Firewall before executing the code.

- Execute

  The VDE bit is considered as soon as the VDS bit = 0 in the FW_CR register. If the VDS bit = 1, refer to the description above on the Volatile data segment sharing. If VDS = 0 and VDE = 1, the Volatile data segment is executable. To avoid a system reset generation from the Firewall, the “call gate” sequence should be applied on the Volatile data segment to open the Firewall as an entry point for the code execution.

Segments properties

Each segment has a specific length register to define the segment size to be protected by the Firewall: CSL register for the Code segment length register, NVDSL for the Non-volatile data segment length register, and VDSL register for the Volatile data segment length register. Granularity and area ranges for each of the segments are presented in *Table 19*.

Table 19. Segment granularity and area ranges

Segment	Granularity	Area range
Code segment	256 byte	1024 Kbytes - 256 bytes
Non-volatile data segment	256 byte	1024 Kbytes - 256 bytes
Volatile data segment	64 byte	256 Kbytes - 64 bytes (on STM32L49x/L4Ax devices) 96 Kbytes - 64 bytes (on STM32L47x/L48x devices)

4.3.5 Firewall initialization

The initialization phase should take place at the beginning of the user code execution (refer to the *Write protection*).

The initialization phase consists of setting up the addresses and the lengths of each segment which needs to be protected by the Firewall. It must be done before enabling the Firewall, because the enabling bit can be written once. Thus, when the Firewall is enabled, it cannot be disabled anymore until the next system reset.

Once the Firewall is enabled, the accesses to the address and length segments are no longer possible. All write attempts are discarded.

A segment defined with a length equal to 0 is not considered as protected by the Firewall. As a consequence, there is no reset generation from the Firewall when an access to the base address of this segment is performed.

After a reset, the Firewall is disabled by default (FWDIS bit in the SYSCFG register is set). It has to be cleared to enable the Firewall feature.

Below is the initialization procedure to follow:

1. Configure the RCC to enable the clock to the Firewall module
2. Configure the RCC to enable the clock of the system configuration registers
3. Set the base address and length of each segment (CSSA, CSL, NVDSSA, NVDSL, VDSSA, VDSL registers)
4. Set the configuration register of the Firewall (FW_CR register)
5. Enable the Firewall clearing the FWDIS bit in the system configuration register.

The Firewall configuration register (FW_CR register) is the only one which can be managed in a dynamic way even if the Firewall is enabled:

- when the Non-Volatile data segment is undefined (meaning the NVDSL register is equal to 0), the accesses to this register are possible whatever the Firewall state (opened or closed).
- when the Non-Volatile data segment is defined (meaning the NVDSL register is different from 0), the accesses to this register are only possible when the Firewall is opened.

4.3.6 Firewall states

The Firewall has three different states as shown in *Figure 8*:

- Disabled: The FWDIS bit is set by default after the reset. The Firewall is not active.
- Closed: The Firewall protects the accesses to the three segments (Code, Non-volatile data, and Volatile data segments).
- Opened: The Firewall allows access to the protected segments as defined in *Section 4.3.4: Segment accesses and properties*.

Figure 8. Firewall functional states

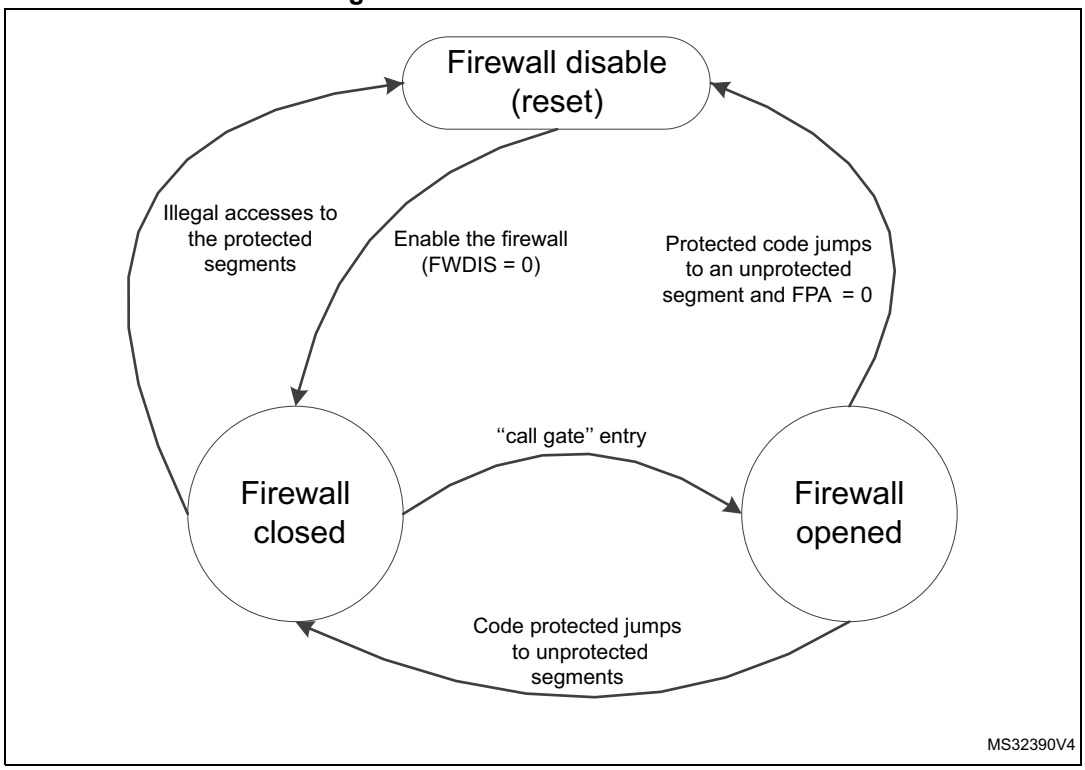

Opening the Firewall

As soon as the Firewall is enabled, it is closed. It means that most of the accesses to the protected segments are forbidden (refer to *Section 4.3.4: Segment accesses and properties*). In order to open the Firewall to interact with the protected segments, it is mandatory to apply the “call gate” sequence described hereafter.

“call gate” sequence

The “call gate” is composed of 3 words located on the first three 32-bit addresses of the base address of the code segment and of the Volatile data segment if it is declared as not shared (VDS = 0) and executable (VDE = 1).

– 1st word: Dummy 32-bit words always closed in order to protect the “call gate” opening from an access due to a prefetch buffer.

– 2nd and 3rd words: 2 specific 32-bit words called “call gate” and always opened.

To open the Firewall, the code currently executed must jump to the 2nd word of the “call gate” and execute the code from this point. The 2nd word and 3rd word execution must not be interrupted by any intermediate instruction fetch; otherwise, the Firewall is not considered open and comes back to a close state. Then, executing the 3rd word after receiving the intermediate instruction fetch would generate a system reset as a consequence.

As soon as the Firewall is opened, the protected segments can be accessed as described in *Section 4.3.4: Segment accesses and properties*.

Closing the Firewall

The Firewall is closed immediately after it is enabled (clearing the FWDIS bit in the system configuration register).

To close the Firewall, the protected code must:

- Write the correct value in the Firewall Pre Arm Flag into the FW_CR register.
- Jump to any executable location outside the Firewall segments.

If the Firewall Pre Arm Flag is not set when the protected code jumps to a non protected segment, a reset is generated. This control bit is an additional protection to avoid an undesired attempt to close the Firewall with the private information not yet cleaned (see the note below).

For security reasons, following the application for which the Firewall is used, it is advised to clean all private information from CPU registers and hardware cells.

4.4 Firewall registers

4.4.1 Code segment start address (FW_CSSA)

Address offset: 0x00

Reset value: 0x0000 0000

31	30	29	28	27	26	25	24	23	22	21	20	19	18	17	16
Res.	Res.	Res.	Res.	Res.	Res.	Res.	Res.	ADD[23:16]							
								rw							

15	14	13	12	11	10	9	8	7	6	5	4	3	2	1	0
ADD[15:8]								Res.	Res.	Res.	Res.	Res.	Res.	Res.	Res.
rw															

Bits 31:24 Reserved, must be kept at reset value.

Bits 23:8 **ADD[23:8]:** code segment start address

The LSB bits of the start address (bit 7:0) are reserved and forced to 0 in order to allow a 256-byte granularity.

Note: These bits can be written only before enabling the Firewall. Refer to Section 4.3.5: Firewall initialization.

Bits 7:0 Reserved, must be kept at the reset value.

4.4.2 Code segment length (FW_CSL)

Address offset: 0x04

Reset value: 0x0000 0000

31	30	29	28	27	26	25	24	23	22	21	20	19	18	17	16
Res.	Res.	Res.	Res.	Res.	Res.	Res.	Res.	Res.	Res.	LENG[21:16]					
										rw					

15	14	13	12	11	10	9	8	7	6	5	4	3	2	1	0
LENG15:8]								Res.	Res.	Res.	Res.	Res.	Res.	Res.	Res.
rw															

Bits 31:22 Reserved, must be kept at the reset value.

Bits 21:8 **LENG[21:8]**: code segment length

LENG[21:8] selects the size of the code segment expressed in bytes but is a multiple of 256 bytes.

The segment area is defined from {ADD[23:8],0x00} to {ADD[23:8]+LENG[21:8], 0x00} - 0x01

Note: If LENG[21:8] = 0 after enabling the Firewall, this segment is not defined, thus not protected by the Firewall.

These bits can only be written before enabling the Firewall. Refer to Section 4.3.5: Firewall initialization.

Bits 7:0 Reserved, must be kept at the reset value.

4.4.3 Non-volatile data segment start address (FW_NVDSSA)

Address offset: 0x08

Reset value: 0x0000 0000

31	30	29	28	27	26	25	24	23	22	21	20	19	18	17	16
Res.	Res.	Res.	Res.	Res.	Res.	Res.	Res.	ADD[23:16]							
								rw							

15	14	13	12	11	10	9	8	7	6	5	4	3	2	1	0
ADD[15:8]								Res.	Res.	Res.	Res.	Res.	Res.	Res.	Res.
rw															

Bits 31:24 Reserved, must be kept at the reset value.

Bits 23:8 **ADD[23:8]:** Non-volatile data segment start address

The LSB bits of the start address (bit 7:0) are reserved and forced to 0 in order to allow a 256-byte granularity.

Note: These bits can only be written before enabling the Firewall. Refer to Section 4.3.5: Firewall initialization.

Bits 7:0 Reserved, must be kept at the reset value.

4.4.4 Non-volatile data segment length (FW_NVDSL)

Address offset: 0x0C

Reset value: 0x0000 0000

31	30	29	28	27	26	25	24	23	22	21	20	19	18	17	16
Res.	Res.	Res.	Res.	Res.	Res.	Res.	Res.	Res.	Res.	LENG[21:16]					
										rw					

15	14	13	12	11	10	9	8	7	6	5	4	3	2	1	0
LENG[15:8]								Res.	Res.	Res.	Res.	Res.	Res.	Res.	Res.
rw															

Bits 31:22 Reserved, must be kept at the reset value.

Bits 21:8 **LENG[21:8]**: Non-volatile data segment length

LENG[21:8] selects the size of the Non-volatile data segment expressed in bytes but is a multiple of 256 bytes.

The segment area is defined from {ADD[23:8],0x00} to {ADD[23:8]+LENG[21:8], 0x00} - 0x01

Note: If LENG[21:8] = 0 after enabling the Firewall, this segment is not defined, thus not protected by the Firewall.

These bits can only be written before enabling the Firewall. Refer to Section 4.3.5: Firewall initialization.

Bits 7:0 Reserved, must be kept at the reset value.

4.4.5 Volatile data segment start address (FW_VDSSA)

Address offset: 0x10

Reset value: 0x0000 0000

31	30	29	28	27	26	25	24	23	22	21	20	19	18	17	16
Res.	Res.	Res.	Res.	Res.	Res.	Res.	Res.	Res.	Res.	Res.	Res.	Res.	Res.	ADD [17:16]	
														rw	rw

15	14	13	12	11	10	9	8	7	6	5	4	3	2	1	0
ADD[15:6]										Res.	Res.	Res.	Res.	Res.	Res.
rw															

Bits 31:18 Reserved, must be kept at the reset value.

Bit 17 **ADD[17]**: Volatile data segment start address (this bit is reserved for STM32L47x/L48x devices)

Bits 16:6 **ADD[16:6]:** Volatile data segment start address

The LSB bits of the start address (bit 5:0) are reserved and forced to 0 in order to allow a 64-byte granularity.

Note: These bits can only be written before enabling the Firewall. Refer to Section 4.3.5: Firewall initialization

Bits 5:0 Reserved, must be kept at the reset value.

4.4.6 Volatile data segment length (FW_VDSL)

Address offset: 0x14

Reset value: 0x0000 0000

31	30	29	28	27	26	25	24	23	22	21	20	19	18	17	16
Res.	Res.	Res.	Res.	Res.	Res.	Res.	Res.	Res.	Res.	Res.	Res.	Res.	Res.	LENG [17:16]	
														rw	rw

15	14	13	12	11	10	9	8	7	6	5	4	3	2	1	0
LENG[15:6]										Res.	Res.	Res.	Res.	Res.	Res.
rw															

Bits 31:18 Reserved, must be kept at the reset value.

Bit 17 **LENG[17]:** volatile data segment length (this bit is reserved for STM32L47x/L48x devices)

Bits 16:6 **LENG[16:6]**: volatile data segment length

LENG[16:6] selects the size of the volatile data segment expressed in bytes but is a multiple of 64 bytes.

The segment area is defined from {ADD[16:6],0x00} to {ADD[16:6]+LENG[16:6], 0x00} - 0x01

Note: If LENG[17:6] = 0 after enabling the Firewall, this segment is not defined, thus not protected by the Firewall.

These bits can only be written before enabling the Firewall. Refer to Section 4.3.5: Firewall initialization.

Bits 5:0 Reserved, must be kept at the reset value.

4.4.7 Configuration register (FW_CR)

Address offset: 0x20

Reset value: 0x0000 0000

31	30	29	28	27	26	25	24	23	22	21	20	19	18	17	16
Res.	Res.	Res.	Res.	Res.	Res.	Res.	Res.	Res.	Res.	Res.	Res.	Res.	Res.	Res.	Res.

15	14	13	12	11	10	9	8	7	6	5	4	3	2	1	0
Res.	Res.	Res.	Res.	Res.	Res.	Res.	Res.	Res.	Res.	Res.	Res.	Res.	VDE	VDS	FPA
													rw	rw	rw

Bits 31:3 Reserved, must be kept at the reset value.

Bit 2 **VDE**: Volatile data execution

0: Volatile data segment cannot be executed if VDS = 0

1: Volatile data segment is declared executable whatever VDS bit value

When VDS = 1, this bit has no meaning. The Volatile data segment can be executed whatever the VDE bit value.

If VDS = 1, the code can be executed whatever the Firewall state (opened or closed)

If VDS = 0, the code can only be executed if the Firewall is opened or applying the “call gate” entry sequence if the Firewall is closed.

Refer to *Segment access depending on the Firewall state*.

Bit 1 **VDS**: Volatile data shared

0: Volatile data segment is not shared and cannot be hit by a non protected executable code when the Firewall is closed. If it is accessed in such a condition, a system reset will be generated by the Firewall.

1: Volatile data segment is shared with non protected application code. It can be accessed whatever the Firewall state (opened or closed).

Refer to *Segment access depending on the Firewall state*.

Bit 0 **FPA**: Firewall prearm

0: any code executed outside the protected segment when the Firewall is opened will generate a system reset.

1: any code executed outside the protected segment will close the Firewall.

Refer to *Closing the Firewall*.

This register is protected in the same way as the Non-volatile data segment (refer to *Section 4.3.5: Firewall initialization)*.

4.4.8 Firewall register map

The table below provides the Firewall register map and reset values.

Table 20. Firewall register map and reset values

Offset	Register	31	30	29	28	27	26	25	24	23	22	21	20	19	18	17	16	15	14	13	12	11	10	9	8	7	6	5	4	3	2	1	0
0x0	FW_CSSA	Res.	Res.	Res.	Res.	Res.	Res.	Res.	Res.	ADD																Res.	Res.	Res.	Res.	Res.	Res.	Res.	Res.
	Reset Value									0	0	0	0	0	0	0	0	0	0	0	0	0	0	0	0								
0x4	FW_CSL	Res.	Res.	Res.	Res.	Res.	Res.	Res.	Res.	Res.	Res.	LENG														Res.	Res.	Res.	Res.	Res.	Res.	Res.	Res.
	Reset Value											0	0	0	0	0	0	0	0	0	0	0	0	0	0								
0x8	FW_NVDSSA	Res.	Res.	Res.	Res.	Res.	Res.	Res.	Res.	ADD																Res.	Res.	Res.	Res.	Res.	Res.	Res.	Res.
	Reset Value									0	0	0	0	0	0	0	0	0	0	0	0	0	0	0	0								
0xC	FW_NVDSL	Res.	Res.	Res.	Res.	Res.	Res.	Res.	Res.	Res.	Res.	LENG														Res.	Res.	Res.	Res.	Res.	Res.	Res.	Res.
	Reset Value											0	0	0	0	0	0	0	0	0	0	0	0	0	0								
0x10	FW_VDSSA	Res.	Res.	Res.	Res.	Res.	Res.	Res.	Res.	Res.	Res.	Res.	Res.	Res.	Res.	ADD												Res.	Res.	Res.	Res.	Res.	Res.
	Reset Value															0	0	0	0	0	0	0	0	0	0	0	0						
0x14	FW_VDSL	Res.	Res.	Res.	Res.	Res.	Res.	Res.	Res.	Res.	Res.	Res.	Res.	Res.	Res.	LENG												Res.	Res.	Res.	Res.	Res.	Res.
	Reset Value															0	0	0	0	0	0	0	0	0	0	0	0						
0x18		Res.	Res.	Res.	Res.	Res.	Res.	Res.	Res.	Res.	Res.	Res.	Res.	Res.	Res.	Res.	Res.	Res.	Res.	Res.	Res.	Res.	Res.	Res.	Res.	Res.	Res.	Res.	Res.	Res.	Res.	Res.	Res.
	Reset Value																																
0x1C		Res.	Res.	Res.	Res.	Res.	Res.	Res.	Res.	Res.	Res.	Res.	Res.	Res.	Res.	Res.	Res.	Res.	Res.	Res.	Res.	Res.	Res.	Res.	Res.	Res.	Res.	Res.	Res.	Res.	Res.	Res.	Res.
	Reset Value																																
0x20	FW_CR	Res.	Res.	Res.	Res.	Res.	Res.	Res.	Res.	Res.	Res.	Res.	Res.	Res.	Res.	Res.	Res.	Res.	Res.	Res.	Res.	Res.	Res.	Res.	Res.	Res.	Res.	Res.	Res.	Res.	VDE	VDS	FPA
	Reset Value																														0	0	0

Refer to *Section 2.2 on page 75* for the register boundary addresses.

5 Power control (PWR)

5.1 Power supplies

The STM32L47x/L48x/L49x/L4Ax devices require a 1.71 V to 3.6 V operating supply voltage (V_{DD}). Several peripherals are supplied through independent power domains: V_{DDA}, V_{DDIO2}, V_{DDUSB}, V_{LCD}. Those supplies must not be provided without a valid operating supply on the V_{DD} pin.

- V_{DD} = 1.71 V to 3.6 V

  V_{DD} is the external power supply for the I/Os, the internal regulator and the system analog such as reset, power management and internal clocks. It is provided externally through VDD pins.

- V_{DD12} = 1.05 V to 1.32 V
  External power supply, connected to V_{CORE}, bypassing internal regulator when connected to an external SMPS. It is provided externally through VDD12 pins and only available on packages with the external SMPS supply option.

- V_{DDA} = 1.62 V (ADCs/COMPs) / 1.8 V (DACs/OPAMPs) / 2.4 V (VREFBUF) to 3.6 V

  V_{DDA} is the external analog power supply for A/D converters, D/A converters, voltage reference buffer, operational amplifiers and comparators. The V_{DDA} voltage level is independent from the V_{DD} voltage. V_{DDA} should be preferably connected to V_{DD} when these peripherals are not used.

- V_{DDUSB} = 3.0 V to 3.6 V

  V_{DDUSB} is the external independent power supply for USB transceivers. The V_{DDUSB} voltage level is independent from the V_{DD} voltage. V_{DDUSB} should be preferably connected to V_{DD} when the USB is not used.

- V_{DDIO2} = 1.08 V to 3.6 V

  V_{DDIO2} is the external power supply for 14 I/Os (Port G[15:2]). The V_{DDIO2} voltage level is independent from the V_{DD} voltage and should preferably be connected to V_{DD} when PG[15:2] are not used.

- V_{LCD} = 2.5 V to 3.6 V

  The LCD controller can be powered either externally through VLCD pin, or internally from an internal voltage generated by the embedded step-up converter. VLCD is multiplexed with PC3 which can be used as GPIO when the LCD is not used.

- V_{BAT} = 1.55 V to 3.6 V

  V_{BAT} is the power supply for RTC, external clock 32 kHz oscillator and backup registers (through power switch) when V_{DD} is not present. VBAT is internally bonded to VDD for small packages without dedicated pin.

- V_{REF-}, V_{REF+}

  V_{REF+} is the input reference voltage for ADCs and DACs. It is also the output of the internal voltage reference buffer when enabled.

  When $V_{DDA} < 2$ V, V_{REF+} must be equal to V_{DDA}.

  When $V_{DDA} \geq 2$ V, V_{REF+} must be between 2 V and V_{DDA}.

  V_{REF+} can be grounded when ADC and DAC are not active.

  The internal voltage reference buffer supports two output voltages, which are configured with VRS bit in the VREFBUF_CSR register:

  – V_{REF+} around 2.048 V. This requires V_{DDA} equal to or higher than 2.4 V.

– V_{REF+} around 2.5 V. This requires V_{DDA} equal to or higher than 2.8 V.

VREF- and VREF+ pins are not available on all packages. When not available on the package, they are bonded to VSSA and VDDA, respectively.

When the VREF+ is double-bonded with VDDA in a package, the internal voltage reference buffer is not available and must be kept disable (refer to related device datasheet for packages pinout description).

V_{REF-} must always be equal to V_{SSA}.

An embedded linear voltage regulator is used to supply the internal digital power V_{CORE}. V_{CORE} is the power supply for digital peripherals and memories.

Figure 9. Power supply overview

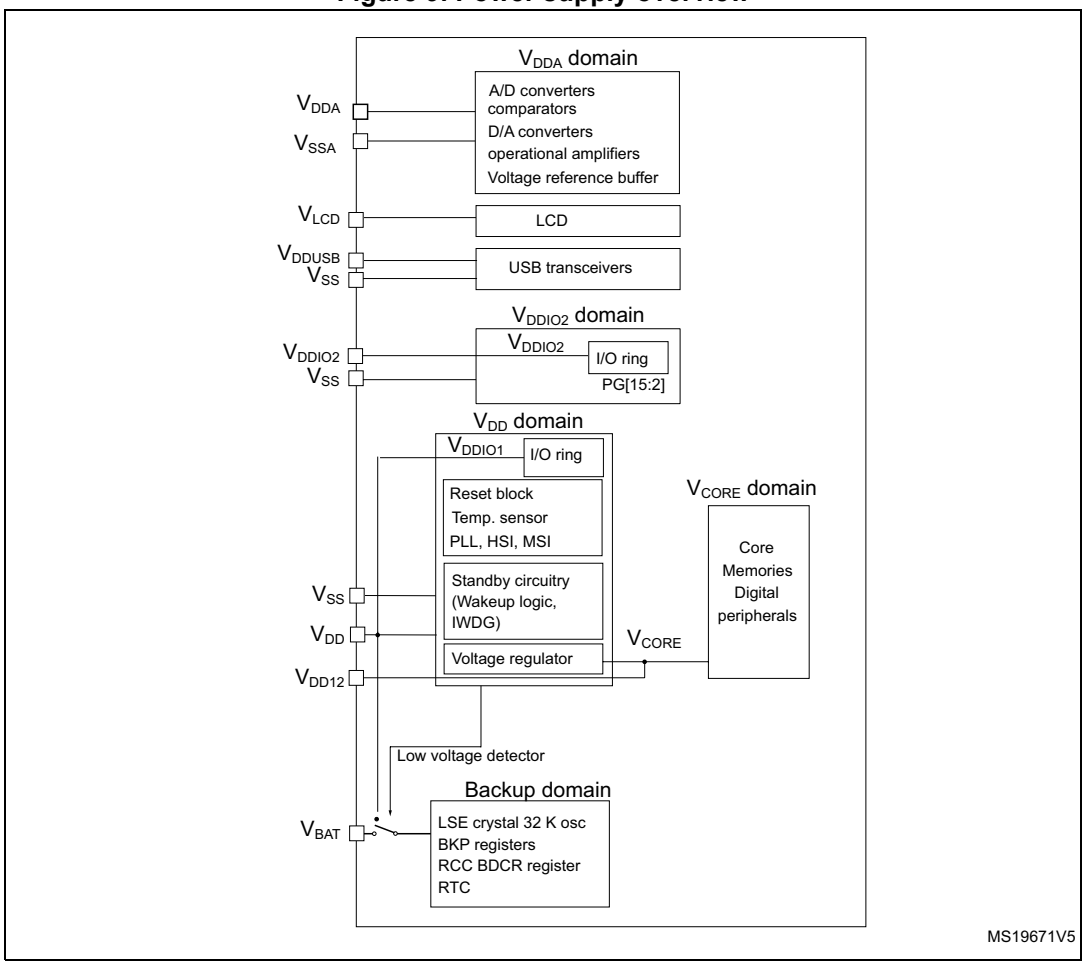

5.1.1 Independent analog peripherals supply

To improve ADC and DAC conversion accuracy and to extend the supply flexibility, the analog peripherals have an independent power supply which can be separately filtered and shielded from noise on the PCB.

- The analog peripherals voltage supply input is available on a separate V_{DDA} pin.
- An isolated supply ground connection is provided on V_{SSA} pin.

The V_{DDA} supply voltage can be different from V_{DD}. The presence of V_{DDA} must be checked before enabling any of the analog peripherals supplied by V_{DDA} (A/D converter, D/A converter, comparators, operational amplifiers, voltage reference buffer).

The V_{DDA} supply can be monitored by the Peripheral Voltage Monitoring, and compared with two thresholds (1.65 V for PVM3 or 1.8 V for PVM4), refer to *Section 5.2.3: Peripheral Voltage Monitoring (PVM)* for more details.

When a single supply is used, V_{DDA} can be externally connected to V_{DD} through the external filtering circuit in order to ensure a noise-free V_{DDA} reference voltage.

ADC and DAC reference voltage

To ensure a better accuracy on low-voltage inputs and outputs, the user can connect to V_{REF+} a separate reference voltage lower than V_{DDA}. V_{REF+} is the highest voltage, represented by the full scale value, for an analog input (ADC) or output (DAC) signal.

V_{REF+} can be provided either by an external reference or by an internal buffered voltage reference (VREFBUF).

The internal voltage reference is enabled by setting the ENVR bit in the *Section 21.4.1: VREFBUF control and status register (VREFBUF_CSR)*. The voltage reference is set to 2.5 V when the VRS bit is set and to 2.048 V when the VRS bit is cleared. The internal voltage reference can also provide the voltage to external components through V_{REF+} pin. Refer to the device datasheet and to *Section 21: Voltage reference buffer (VREFBUF)* for further information.

5.1.2 Independent I/O supply rail

Some I/Os from Port G (PG[15:2]) are supplied from a separate supply rail. The power supply for this rail can range from 1.08 V to 3.6 V and is provided externally through the V_{DDIO2} pin. The V_{DDIO2} voltage level is completely independent from V_{DD} or V_{DDA}. The V_{DDIO2} pin is available only for some packages. Refer to the pinout diagrams or tables in the related device datasheet(s) for I/O list(s).

After reset, the I/Os supplied by V_{DDIO2} are logically and electrically isolated and therefore are not available. The isolation must be removed before using any I/O from PG[15:2], by setting the IOSV bit in the PWR_CR2 register, once the V_{DDIO2} supply is present.

The V_{DDIO2} supply is monitored by the Peripheral Voltage Monitoring (PVM2) and compared with the internal reference voltage (3/4 V_{REFINT}, around 0.9V), refer to *Section 5.2.3: Peripheral Voltage Monitoring (PVM)* for more details.

5.1.3 Independent USB transceivers supply[a]

The USB transceivers are supplied from a separate V_{DDUSB} power supply pin. V_{DDUSB} range is from 3.0 V to 3.6 V and is completely independent from V_{DD} or V_{DDA}.

After reset, the USB features supplied by V_{DDUSB} are logically and electrically isolated and therefore are not available. The isolation must be removed before using the USB OTG peripheral, by setting the USV bit in the PWR_CR2 register, once the V_{DDUSB} supply is present.

a. Not available on STM32L471 devices.

The V_{DDUSB} supply is monitored by the Peripheral Voltage Monitoring (PVM1) and compared with the internal reference voltage (V_{REFINT}, around 1.2 V), refer to *Section 5.2.3: Peripheral Voltage Monitoring (PVM)* for more details.

5.1.4 Independent LCD supply[a]

The VLCD pin is provided to control the contrast of the glass LCD. This pin can be used in two ways:

- It can receive from an external circuitry the desired maximum voltage that is provided on segment and common lines to the glass LCD by the microcontroller.
- It can also be used to connect an external capacitor that is used by the microcontroller for its voltage step-up converter. This step-up converter is controlled by software to provide the desired voltage to segment and common lines of the glass LCD.

The voltage provided to segment and common lines defines the contrast of the glass LCD pixels. This contrast can be reduced when you configure the dead time between frames.

- When an external power supply is provided to the VLCD pin, it should range from 2.5 V to 3.6 V. It does not depend on V_{DD}.
- When the LCD is based on the internal step-up converter, the VLCD pin should be connected to a capacitor (see the product datasheet for further information).

5.1.5 Battery backup domain

To retain the content of the Backup registers and supply the RTC function when V_{DD} is turned off, the VBAT pin can be connected to an optional backup voltage supplied by a battery or by another source.

The VBAT pin powers the RTC unit, the LSE oscillator and the PC13 to PC15 I/Os, allowing the RTC to operate even when the main power supply is turned off. The switch to the V_{BAT} supply is controlled by the power-down reset embedded in the Reset block.

Warning: **During $t_{RSTTEMPO}$ (temporization at V_{DD} startup) or after a PDR has been detected, the power switch between V_{BAT} and V_{DD} remains connected to V_{BAT}.**
During the startup phase, if V_{DD} is established in less than $t_{RSTTEMPO}$ (refer to the datasheet for the value of $t_{RSTTEMPO}$) and $V_{DD} > V_{BAT} + 0.6$ V, a current may be injected into V_{BAT} through an internal diode connected between V_{DD} and the power switch (V_{BAT}).
If the power supply/battery connected to the VBAT pin cannot support this current injection, it is strongly recommended to connect an external low-drop diode between this power supply and the VBAT pin.

If no external battery is used in the application, it is recommended to connect V_{BAT} externally to V_{DD} with a 100 nF external ceramic decoupling capacitor.

a. Not available on STM32L471/4x5 devices.

When the backup domain is supplied by V_{DD} (analog switch connected to V_{DD}), the following pins are available:

- PC13, PC14 and PC15, which can be used as GPIO pins
- PC13, PC14 and PC15, which can be configured by RTC or LSE (refer to *Section 38.3: RTC functional description on page 1226*)
- PA0/RTC_TAMP2 and PE6/RTC_TAMP3 when they are configured by the RTC as tamper pins

Note: Due to the fact that the analog switch can transfer only a limited amount of current (3 mA), the use of GPIO PC13 to PC15 in output mode is restricted: the speed has to be limited to 2 MHz with a maximum load of 30 pF and these I/Os must not be used as a current source (e.g. to drive a LED).

When the backup domain is supplied by V_{BAT} (analog switch connected to V_{BAT} because V_{DD} is not present), the following functions are available:

- PC13, PC14 and PC15 can be controlled only by RTC or LSE (refer to *Section 38.3: RTC functional description*)
- PA0/RTC_TAMP2 and PE6/RTC_TAMP3 when they are configured by the RTC as tamper pins

Backup domain access

After a system reset, the backup domain (RTC registers and backup registers) is protected against possible unwanted write accesses. To enable access to the backup domain, proceed as follows:

1. Enable the power interface clock by setting the PWREN bits in the *Section 6.4.19: APB1 peripheral clock enable register 1 (RCC_APB1ENR1)*
2. Set the DBP bit in the *Power control register 1 (PWR_CR1)* to enable access to the backup domain
3. Select the RTC clock source in the *Backup domain control register (RCC_BDCR)*.
4. Enable the RTC clock by setting the RTCEN [15] bit in the *Backup domain control register (RCC_BDCR)*.

VBAT battery charging

When VDD is present, It is possible to charge the external battery on VBAT through an internal resistance.

The VBAT charging is done either through a 5 kOhm resistor or through a 1.5 kOhm resistor depending on the VBRS bit value in the PWR_CR4 register.

The battery charging is enabled by setting VBE bit in the PWR_CR4 register. It is automatically disabled in VBAT mode.

5.1.6 Voltage regulator

Two embedded linear voltage regulators supply all the digital circuitries, except for the Standby circuitry and the backup domain. The main regulator output voltage (V_{CORE}) can be programmed by software to two different power ranges (Range 1 and Range 2) in order to optimize the consumption depending on the system's maximum operating frequency (refer to *Section 6.2.9: Clock source frequency versus voltage scaling* and to *Section 3.3.3: Read access latency*.

The voltage regulators are always enabled after a reset. Depending on the application modes, the V_{CORE} supply is provided either by the main regulator (MR) or by the low-power regulator (LPR).

- In Run, Sleep and Stop 0 modes, both regulators are enabled and the main regulator (MR) supplies full power to the V_{CORE} domain (core, memories and digital peripherals).
- In low-power run and low-power sleep modes, the main regulator is off and the low-power regulator (LPR) supplies low power to the V_{CORE} domain, preserving the contents of the registers, SRAM1 and SRAM2.
- In Stop 1 and Stop 2 modes, the main regulator is off and the low-power regulator (LPR) supplies low power to the V_{CORE} domain, preserving the contents of the registers, SRAM1 and SRAM2.
- In Standby mode with SRAM2 content preserved (RRS bit is set in the PWR_CR3 register), the main regulator (MR) is off and the low-power regulator (LPR) provides the supply to SRAM2 only. The core, digital peripherals (except Standby circuitry and backup domain) and SRAM1 are powered off.
- In Standby mode, both regulators are powered off. The contents of the registers, SRAM1 and SRAM2 is lost except for the Standby circuitry and the backup domain.
- In Shutdown mode, both regulators are powered off. When exiting from Shutdown mode, a power-on reset is generated. Consequently, the contents of the registers, SRAM1 and SRAM2 is lost, except for the backup domain.

5.1.7 VDD12 domain

V_{DD12} is intended to be connected with external SMPS (Switched-mode Power Supply) to generate the V_{CORE} logic supply in Run, Sleep and Stop 0 modes only.

VDD12 pins correspond to the internal V_{CORE} powering the digital part of Core, memories and peripherals. This improves significantly power consumption gain by 50% or more depending of the SMPS performances.

The main benefit occurs in Run and Sleep modes whereas in Stop 0 mode, the gain is less significant.

The *Figure 10* shows a schematic to understand how the internal regulator stops supplying V_{CORE} when an external voltage V_{DD12} is provided.

As VDD12 shares the same pin as output of the internal regulator, applying a slightly higher voltage (typically +50 mV) on the VDD12 blocks the PMOS and the regulator consumption is negligible.

Figure 10. Internal main regulator overview

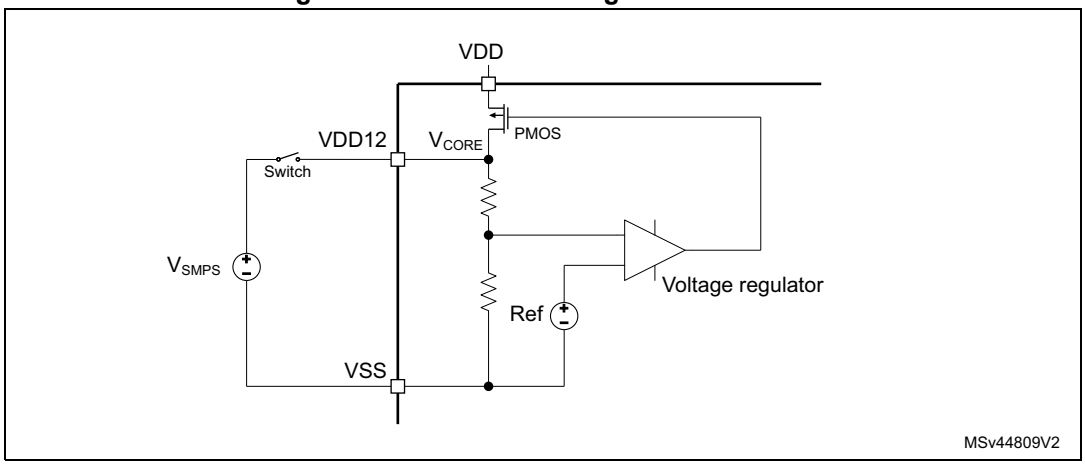

A switch, controlled by chosen GPIO, is inserted between the SMPS output and VDD12. There are two possible states:

- Connected: Switch is closed so SMPS powers VDD12
- Disconnected: Switch is open and VDD12 is disconnected from SMPS output

Proper software management through GPIOs to enable/disable SMPS and connect/disconnect SMPS through the switch, is required to conform with the rules described below.

(See also *Section 5.1.8: Dynamic voltage scaling management*)

It is mandatory to respect the following rules to avoid any damage or instability on either digital parts or internal regulators:

- In Run, Sleep and Stop 0 modes, V_{DD12} can be connected and should respect
  - $V_{DD12} < 1.32$ V
  - $V_{DD12} \geq V_{CORE} + 50$mV giving for Main Regulator

    Range 1, $V_{CORE} = 1.2$ V so V_{DD12} should be greater than 1.25 V

    Range 2, $V_{CORE} = 1.0$ V so V_{DD12} should be greater than 1.05 V
  - $V_{DD12} \geq 1.08$ V in Range 2 when SYSCLK frequency ≥ 26 MHz
- In all other modes, ie LPRun, LPSleep, Stop 1, Stop 2, Standby and Shutdown modes, VDD12 must be disconnected from SMPS output, ie pin must be connected to an high impedance output:
  - VDD12 connected to HiZ (voltage is provided by internal regulators)
- Transitions of VDD12 from connected to disconnected is only allowed when SYSCLK frequency ≤ 26 MHz to avoid to big voltage drop on main regulator side.

Note: In case of reset while having the $V_{DD12} \leq 1.25$ V, VDD12 should switch to HiZ in less than regulator switching time from Range 2 to Range 1 (~1 us).

Note: For more details on VDD12 management, refer to AN4978 "Design recommendations for STM32L4xxxx with external SMPS, for ultra-low-power applications with high performance

5.1.8 Dynamic voltage scaling management

The dynamic voltage scaling is a power management technique which consists in increasing or decreasing the voltage used for the digital peripherals (V_{CORE}), according to the application performance and power consumption needs.

Dynamic voltage scaling to increase V_{CORE} is known as over-volting. It allows to improve the device performance.

Dynamic voltage scaling to decrease V_{CORE} is known as under-volting. It is performed to save power, particularly in laptop and other mobile devices where the energy comes from a battery and is thus limited.

The main regulator have two possible programmable voltage range detailed below:

- Range 1: High-performance range.

The main regulator provides a typical output voltage at 1.2 V. The system clock frequency can be up to 80 MHz. The Flash access time for read access is minimum, write and erase operations are possible.

- Range 2: Low-power range.

The main regulator provides a typical output voltage at 1.0 V. The system clock frequency can be up to 26 MHz.The Flash access time for a read access is increased as compared to Range 1; write and erase operations are possible.

Voltage scaling is selected through the VOS bit in the PWR_CR1 register.

The sequence to go from Range 1 to Range 2 is:

1.Reduce the system frequency to a value lower than 26 MHz

2. Adjust number of wait states according new frequency target in Range 2 (LATENCY bits in the FLASH_ACR).

3. Program the VOS bits to “10” in the PWR_CR1 register.

The sequence to go from Range 2 to Range 1 is:

1. Program the VOS bits to “01” in the PWR_CR1 register.
2. Wait until the VOSF flag is cleared in the PWR_SR2 register.
3. Adjust number of wait states according new frequency target in Range 1 (LATENCY bits in the FLASH_ACR).
4. Increase the system frequency.

When supplying VDD12 with an external SMPS, we are defining 3 new states:

- “SMPS range 1”: main regulator is in Range 1 and V_{CORE} is supplied by external SMPS with V_{DD12} higher than 1.25 V
- “SMPS range 2 High”: main regulator is in Range 2 and V_{CORE} is supplied by external SMPS with V_{DD12} higher than 1.08 V
- “SMPS range 2 Low”: main regulator is in Range 2 and V_{CORE} is supplied by external SMPS with V_{DD12} higher than 1.05 V

In order to match the upper rules described in *Section 5.1.7: VDD12 domain*, the transition sequences can only be one of the following:

- Range 1 to “SMPS Range 1”:

1. Start SMPS converter (if not always enabled by HW).
2. Check that SMPS converter output is at the correct level i.e. 1.25 V ≤ V_{DD12} < 1.32 V.
3. Connect VDD12 to external SMPS converter through the switch.

- Range 2 to “SMPS Range 2 Low & High”:
  1. Start SMPS (if not always enabled by HW).
  2. Check that SMPS output is at the correct level ie 1.05 V ≤ V_{DD12} < 1.32 V.
  3. Connect VDD12 to external SMPS converter through the switch.

If 1.08 V ≤ V_{DD12} (ie SMPS Range 2 High), then the following steps can be applied:

4. Adjust the number of wait states in the FLASH_ACR (up to max frequency of Range 1 refer to *Section 3.3.3: Read access latency*).
5. Increase the system frequency up to the maximum allowed value for Voltage Range 1 (ie 80 MHz).

- “SMPS Range 1” to Range 1:

or

- SMPS Range 2 Low & High” to Range 2:
  1. If in Range 1, reduce the system frequency to a value lower or equal to 26 MHz.
  2. Adjust number of wait states according new frequency target corresponding to Voltage Range (LATENCY bits in the FLASH_ACR).
  3. Disconnect VDD12 by opening the switch.
  4. Stop SMPS (if required and not kept always enabled).

If in Range 1, then the following step can be applied:

5. Increase the system frequency if needed.

5.2 Power supply supervisor

5.2.1 Power-on reset (POR) / power-down reset (PDR) / brown-out reset (BOR)

The device has an integrated power-on reset (POR) / power-down reset (PDR), coupled with a brown-out reset (BOR) circuitry. The BOR is active in all power modes except Shutdown mode, and cannot be disabled.

Five BOR thresholds can be selected through option bytes.

During power-on, the BOR keeps the device under reset until the supply voltage V_{DD} reaches the specified V_{BORx} threshold. When V_{DD} drops below the selected threshold, a device reset is generated. When V_{DD} is above the V_{BORx} upper limit, the device reset is released and the system can start.

For more details on the brown-out reset thresholds, refer to the electrical characteristics section in the datasheet.

Figure 11. Brown-out reset waveform

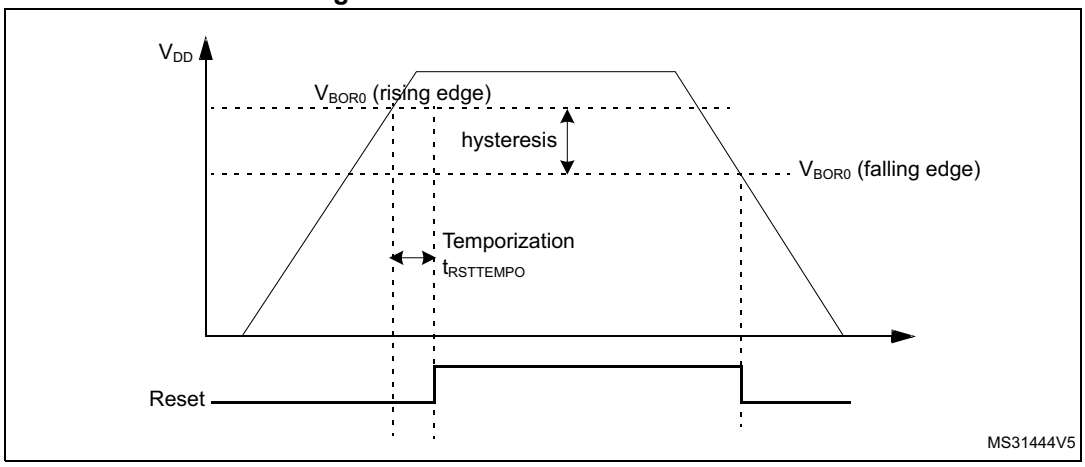

1. The reset temporization $t_{RSTTEMPO}$ is present only for the BOR lowest threshold (V_{BOR0}).

5.2.2 Programmable voltage detector (PVD)

You can use the PVD to monitor the V_{DD} power supply by comparing it to a threshold selected by the PLS[2:0] bits in the *Power control register 2 (PWR_CR2)*.

The PVD is enabled by setting the PVDE bit.

A PVDO flag is available, in the *Power status register 2 (PWR_SR2)*, to indicate if V_{DD} is higher or lower than the PVD threshold. This event is internally connected to the EXTI line16 and can generate an interrupt if enabled through the EXTI registers. The rising/falling edge sensitivity of the EXTI Line16 should be configured according to PVD output behavior i.e. if the EXTI line 16 is configured to rising edge sensitivity, the interrupt will be generated when VDD drops below the PVD threshold. As an example the service routine could perform emergency shutdown tasks.

Figure 12. PVD thresholds

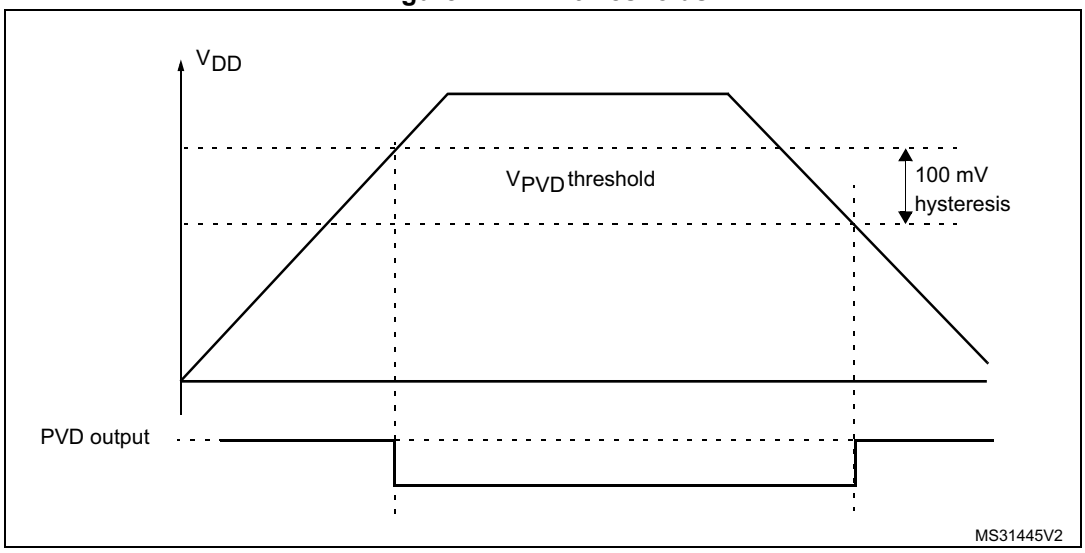

5.2.3 Peripheral Voltage Monitoring (PVM)

Only V_{DD} is monitored by default, as it is the only supply required for all system-related functions. The other supplies (V_{DDA}, V_{DDIO2} and V_{DDUSB}) can be independent from V_{DD} and can be monitored with four Peripheral Voltage Monitoring (PVM).

Each of the four PVMx (x=1, 2, 3, 4) is a comparator between a fixed threshold V_{PVMx} and the selected power supply. PVMOx flags indicate if the independent power supply is higher or lower than the PVMx threshold: PVMOx flag is cleared when the supply voltage is above the PVMx threshold, and is set when the supply voltage is below the PVMx threshold.

Each PVM output is connected to an EXTI line and can generate an interrupt if enabled through the EXTI registers. The PVMx output interrupt is generated when the independent power supply drops below the PVMx threshold and/or when it rises above the PVMx threshold, depending on EXTI line rising/falling edge configuration.

Each PVM can remain active in Stop 0, Stop 1 and Stop 2 modes, and the PVM interrupt can wake up from the Stop mode.

Table 21. PVM features

PVM	Power supply	PVM threshold	EXTI line
PVM1	V_{DDUSB}	V_{PVM1} (around 1.2 V)	35
PVM2	V_{DDIO2}	V_{PVM2} (around 0.9 V)	36
PVM3	V_{DDA}	V_{PVM3} (around 1.65 V)	37
PVM4	V_{DDA}	V_{PVM4} (around 1.8 V)	38

The independent supplies (V_{DDA}, V_{DDIO2} and V_{DDUSB}) are not considered as present by default, and a logical and electrical isolation is applied to ignore any information coming from the peripherals supplied by these dedicated supplies.

- If these supplies are shorted externally to V_{DD}, the application should assume they are available without enabling any Peripheral Voltage Monitoring.
- If these supplies are independent from V_{DD}, the Peripheral Voltage Monitoring (PVM) can be enabled to confirm whether the supply is present or not.

The following sequence must be done before using the USB OTG peripheral:

1. If V_{DDUSB} is independent from V_{DD}:
   a) Enable the PVM1 by setting PVME1 bit in the *Power control register 2 (PWR_CR2)*.
   b) Wait for the PVM1 wakeup time
   c) Wait until PVMO1 bit is cleared in the *Power status register 2 (PWR_SR2)*.
   d) Optional: Disable the PVM1 for consumption saving.
2. Set the USV bit in the *Power control register 2 (PWR_CR2)* to remove the V_{DDUSB} power isolation.

The following sequence must be done before using any I/O from PG[15:2]:

1. If V_{DDIO2} is independent from V_{DD}:
   a) Enable the PVM2 by setting PVME2 bit in the *Power control register 2 (PWR_CR2)*.
   b) Wait for the PVM2 wakeup time
   c) Wait until PVMO2 bit is cleared in the *Power status register 2 (PWR_SR2)*.
   d) Optional: Disable the PVM2 for consumption saving.
2. Set the IOSV bit in the *Power control register 2 (PWR_CR2)* to remove the V_{DDIO2} power isolation.

The following sequence must be done before using any of these analog peripherals: analog to digital converters, digital to analog converters, comparators, operational amplifiers, voltage reference buffer:

1. If V_{DDA} is independent from V_{DD}:
   a) Enable the PVM3 (or PVM4) by setting PVME3 (or PVME4) bit in the *Power control register 2 (PWR_CR2)*.
   b) Wait for the PVM3 (or PVM4) wakeup time
   c) Wait until PVMO3 (or PVMO4) bit is cleared in the *Power status register 2 (PWR_SR2)*.
   d) Optional: Disable the PVM3 (or PVM4) for consumption saving.
2. Enable the analog peripheral, which automatically removes the V_{DDA} isolation.

5.3 Low-power modes

By default, the microcontroller is in Run mode after a system or a power Reset. Several low-power modes are available to save power when the CPU does not need to be kept running, for example when waiting for an external event. It is up to the user to select the mode that gives the best compromise between low-power consumption, short startup time and available wakeup sources.

The device features seven low-power modes:

- Sleep mode: CPU clock off, all peripherals including Cortex®-M4 core peripherals such as NVIC, SysTick, etc. can run and wake up the CPU when an interrupt or an event occurs. Refer to *Section 5.3.4: Sleep mode*.
- Low-power run mode: This mode is achieved when the system clock frequency is reduced below 2 MHz. The code is executed from the SRAM or the Flash memory. The regulator is in low-power mode to minimize the regulator's operating current. Refer to *Section 5.3.2: Low-power run mode (LP run)*.
- Low-power sleep mode: This mode is entered from the Low-power run mode: Cortex®-M4 is off. Refer to *Section 5.3.5: Low-power sleep mode (LP sleep)*.
- Stop 0, Stop 1 and Stop 2 modes: SRAM1, SRAM2 and all registers content are retained. All clocks in the V_{CORE} domain are stopped, the PLL, the MSI, the HSI16 and the HSE are disabled. The LSI and the LSE can be kept running.

  The RTC can remain active (Stop mode with RTC, Stop mode without RTC).

  Some peripherals with the wakeup capability can enable the HSI16 RC during the Stop mode to detect their wakeup condition.

  In Stop 2 mode, most of the V_{CORE} domain is put in a lower leakage mode.

  Stop 1 offers the largest number of active peripherals and wakeup sources, a smaller wakeup time but a higher consumption than Stop 2. In Stop 0 mode, the main regulator

remains ON, which allows the fastest wakeup time but with much higher consumption. The active peripherals and wakeup sources are the same as in Stop 1 mode.

The system clock, when exiting from Stop 0, Stop 1 or Stop 2 mode, can be either MSI up to 48 MHz or HSI16, depending on the software configuration.

Refer to *Section 5.3.6: Stop 0 mode* and *Section 5.3.8: Stop 2 mode*.

- Standby mode: V_{CORE} domain is powered off. However, it is possible to preserve the SRAM2 contents:
  - Standby mode with SRAM2 retention when the bit RRS is set in PWR_CR3 register. In this case, SRAM2 is supplied by the low-power regulator.
  - Standby mode when the bit RRS is cleared in PWR_CR3 register. In this case the main regulator and the low-power regulator are powered off.

  All clocks in the V_{CORE} domain are stopped, the PLL, the MSI, the HSI16 and the HSE are disabled. The LSI and the LSE can be kept running.

  The RTC can remain active (Standby mode with RTC, Standby mode without RTC).

  The system clock, when exiting Standby modes, is MSI from 1 MHz up to 8 MHz.

  Refer to *Section 5.3.9: Standby mode*.
- Shutdown mode: V_{CORE} domain is powered off. All clocks in the V_{CORE} domain are stopped, the PLL, the MSI, the HSI16, the LSI and the HSE are disabled. The LSE can be kept running. The system clock, when exiting the Shutdown mode, is MSI at 4 MHz. In this mode, the supply voltage monitoring is disabled and the product behavior is not guaranteed in case of a power voltage drop. Refer to *Section 5.3.10: Shutdown mode*.

In addition, the power consumption in Run mode can be reduced by one of the following means:

- Slowing down the system clocks
- Gating the clocks to the APB and AHB peripherals when they are unused.

Figure 13. Low-power modes possible transitions

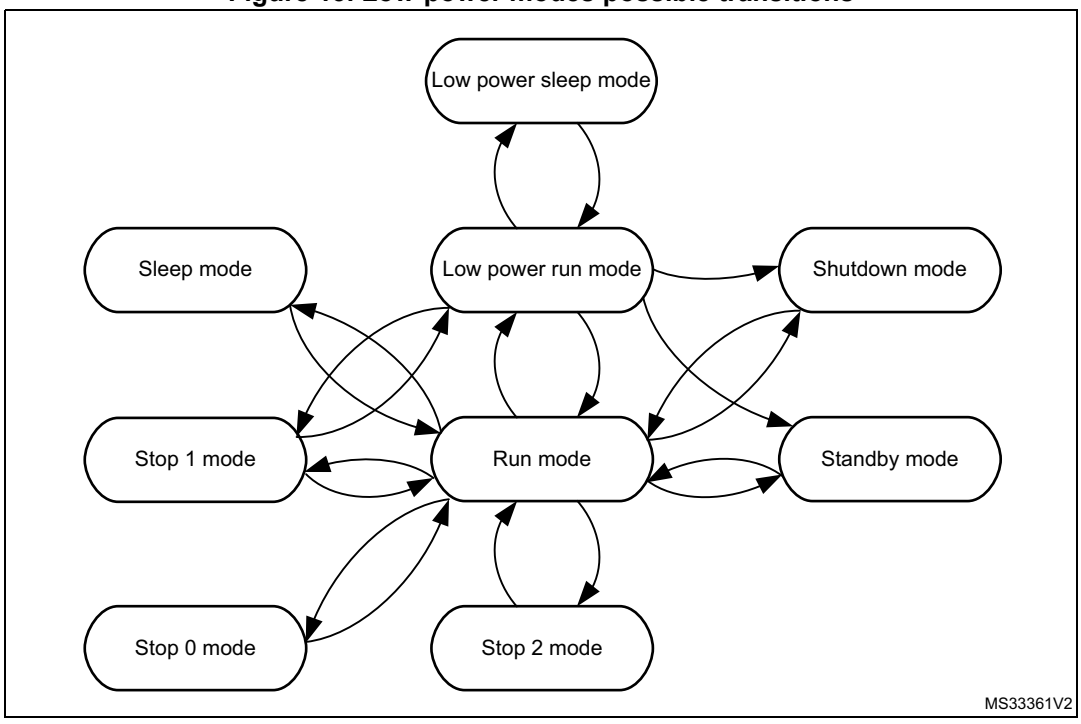

Table 22. Low-power mode summary

Mode name	Entry	Wakeup source(1)	Wakeup system clock	Effect on clocks	Voltage regulators	
					MR	LPR
Sleep (Sleep-now or Sleep-on-exit)	WFI or Return from ISR	Any interrupt	Same as before entering Sleep mode	CPU clock OFF no effect on other clocks or analog clock sources	ON	ON
	WFE	Wakeup event				
Low-power run	Set LPR bit	Clear LPR bit	Same as Low-power run clock	None	OFF	ON
Low-power sleep	Set LPR bit + WFI or Return from ISR	Any interrupt	Same as before entering Low-power sleep mode	CPU clock OFF no effect on other clocks or analog clock sources	OFF	ON
	Set LPR bit + WFE	Wakeup event			OFF	ON
Stop 0	LPMS=”000” + SLEEPDEEP bit + WFI or Return from ISR or WFE	Any EXTI line (configured in the EXTI registers) Specific peripherals events	HSI16 when STOPWUCK=1 in RCC_CFGR MSI with the frequency before entering the Stop mode when STOPWUCK=0.	All clocks OFF except LSI and LSE	ON	ON
Stop 1	LPMS=”001” + SLEEPDEEP bit + WFI or Return from ISR or WFE				OFF	
Stop 2	LPMS=”010” + SLEEPDEEP bit + WFI or Return from ISR or WFE					
Standby with SRAM2	LPMS=”011”+ Set RRS bit + SLEEPDEEP bit + WFI or Return from ISR or WFE	WKUP pin edge, RTC event, external reset in NRST pin, IWDG reset	MSI from 1 MHz up to 8 MHz			
Standby	LPMS=”011” + Clear RRS bit + SLEEPDEEP bit + WFI or Return from ISR or WFE	WKUP pin edge, RTC event, external reset in NRST pin, IWDG reset			OFF	OFF
Shutdown	LPMS=”1--” + SLEEPDEEP bit + WFI or Return from ISR or WFE	WKUP pin edge, RTC event, external reset in NRST pin	MSI 4 MHz	All clocks OFF except LSE	OFF	OFF

1. Refer to *Table 23: Functionalities depending on the working mode*.

Table 23. Functionalities depending on the working mode[1]

Peripheral	Run	Sleep	Low-power run	Low-power sleep	Stop 0/1		Stop 2		Standby		Shutdown		VBAT
					-	Wakeup capability	-	Wakeup capability	-	Wakeup capability	-	Wakeup capability	
CPU	Y	-	Y	-	-	-	-	-	-	-	-	-	-
Flash memory (up to 1 MB)	O[2]	O[2]	O[2]	O[2]	-	-	-	-	-	-	-	-	-
SRAM1 (up to 256 KB)	Y	Y[3]	Y	Y[3]	Y	-	Y	-	-	-	-	-	-
SRAM2 (up to 64 KB)	Y	Y[3]	Y	Y[3]	Y	-	Y	-	O[4]	-	-	-	-
FSMC	O	O	O	O	-	-	-	-	-	-	-	-	-
QUADSPI	O	O	O	O	-	-	-	-	-	-	-	-	-
Backup Registers	Y	Y	Y	Y	Y	-	Y	-	Y	-	Y	-	Y
Brown-out reset (BOR)	Y	Y	Y	Y	Y	Y	Y	Y	Y	Y	-	-	-
Programmable Voltage Detector (PVD)	O	O	O	O	O	O	O	O	-	-	-	-	-
Peripheral Voltage Monitor (PVMx; x=1,2,3,4)	O	O	O	O	O	O	O	O	-	-	-	-	-
DMA	O	O	O	O	-	-	-	-	-	-	-	-	-
DMA2D[5]	O	O	O	O	-	-	-	-	-	-	-	-	-
Oscillator HSI16	O	O	O	O	[6]	-	[6]	-	-	-	-	-	-
Oscillator HSI48[5]	O	O	-	-	-	-	-	-	-	-	-	-	-
High Speed External (HSE)	O	O	O	O	-	-	-	-	-	-	-	-	-
Low Speed Internal (LSI)	O	O	O	O	O	-	O	-	O	-	-	-	-
Low Speed External (LSE)	O	O	O	O	O	-	O	-	O	-	O	-	O
Multi-Speed Internal (MSI)	O	O	O	O	-	-	-	-	-	-	-	-	-
Clock Security System (CSS)	O	O	O	O	-	-	-	-	-	-	-	-	-
Clock Security System on LSE	O	O	O	O	O	O	O	O	O	O	-	-	-
RTC / Auto wakeup	O	O	O	O	O	O	O	O	O	O	O	O	O
Number of RTC Tamper pins	3	3	3	3	3	O	3	O	3	O	3	O	3
Camera interface[5]	O	O	O	O	-	-	-	-	-	-	-	-	-
LCD[7]	O	O	O	O	O	O	O	O	-	-	-	-	-

Table 23. Functionalities depending on the working mode[1] (continued)

Peripheral	Run	Sleep	Low-power run	Low-power sleep	Stop 0/1		Stop 2		Standby		Shutdown		VBAT
					-	Wakeup capability	-	Wakeup capability	-	Wakeup capability	-	Wakeup capability	
USB OTG FS[8]	O[11]	O[11]	-	-	-	O	-	-	-	-	-	-	-
USARTx (x=1,2,3,4,5)	O	O	O	O	O (9)	O (9)	-	-	-	-	-	-	-
Low-power UART (LPUART1)	O	O	O	O	O (9)	O (9)	O[9]	O (9)	-	-	-	-	-
I2Cx (x=1,2,4[5])	O	O	O	O	O (10)	O (10)	-	-	-	-	-	-	-
I2C3	O	O	O	O	O (10)	O (10)	O (10)	O (10)	-	-	-	-	-
SPIx (x=1,2,3)	O	O	O	O	-	-	-	-	-	-	-	-	-
CANx (x=1,2[5])	O	O	O	O	-	-	-	-	-	-	-	-	-
SDMMC1	O	O	O	O	-	-	-	-	-	-	-	-	-
SWPMI1	O	O	O	O	-	O	-	-	-	-	-	-	-
SAIx (x=1,2)	O	O	O	O	-	-	-	-	-	-	-	-	-
DFSDM1	O	O	O	O	-	-	-	-	-	-	-	-	-
ADCx (x=1,2,3)	O	O	O	O	-	-	-	-	-	-	-	-	-
DAC_CHx (x=1,2)	O	O	O	O	O	-	-	-	-	-	-	-	-
VREFBUF[15]	O	O	O	O	O	-	-	-	-	-	-	-	-
OPAMPx (x=1,2)	O	O	O	O	O	-	-	-	-	-	-	-	-
COMPx (x=1,2[15])	O	O	O	O	O	O	O	O	-	-	-	-	-
Temperature sensor	O	O	O	O	-	-	-	-	-	-	-	-	-
Timers (TIMx)	O	O	O	O	-	-	-	-	-	-	-	-	-
Low-power timer 1 (LPTIM1)	O	O	O	O	O	O	O	O	-	-	-	-	-
Low-power timer 2 (LPTIM2)	O	O	O	O	O	O	-	-	-	-	-	-	-
Independent watchdog (IWDG)	O	O	O	O	O	O	O	O	O	O	-	-	-
Window watchdog (WWDG)	O	O	O	O	-	-	-	-	-	-	-	-	-
SysTick timer	O	O	O	O	-	-	-	-	-	-	-	-	-
Touch sensing controller (TSC)	O	O	O	O	-	-	-	-	-	-	-	-	-

Table 23. Functionalities depending on the working mode[1] (continued)

Peripheral	Run	Sleep	Low-power run	Low-power sleep	Stop 0/1		Stop 2		Standby		Shutdown		VBAT
					-	Wakeup capability	-	Wakeup capability	-	Wakeup capability	-	Wakeup capability	
Random number generator (RNG)	O[11]	O[11]	-	-	-	-	-	-	-	-	-	-	-
AES hardware accelerator[12]	O	O	O	O	-	-	-	-	-	-	-	-	-
HASH hardware accelerator[5]	O	O	O	O	-	-	-	-	-	-	-	-	-
CRC calculation unit	O	O	O	O	-	-	-	-	-	-	-	-	-
GPIOs	O	O	O	O	O	O	O	O	[13]	5 pins [14]	[15]	5 pins [14]	-

1. Legend: Y = Yes (Enable). O = Optional (Disable by default. Can be enabled by software). - = Not available.
2. The Flash can be configured in power-down mode. By default, it is not in power-down mode.
3. The SRAM clock can be gated on or off.
4. SRAM2 content is preserved when the bit RRS is set in PWR_CR3 register.
5. Not available on STM32L47x/L48x devices.
6. Some peripherals with wakeup from Stop capability can request HSI16 to be enabled. In this case, HSI16 is woken up by the peripheral, and only feeds the peripheral which requested it. HSI16 is automatically put off when the peripheral does not need it anymore.
7. Not available on STM32L471/L4x5 devices.
8. Not available on STM32L471 devices.
9. UART and LPUART reception is functional in Stop mode, and generates a wakeup interrupt on Start, address match or received frame event.
10. I2C address detection is functional in Stop mode, and generates a wakeup interrupt in case of address match.
11. Voltage scaling Range 1, SMPS Range 1 or SMPS Range 2 High only.
12. Not available on STM32L47x/L49x devices.
13. I/Os can be configured with internal pull-up, pull-down or floating in Standby mode.
14. The I/Os with wakeup from Standby/Shutdown capability are: PA0, PC13, PE6, PA2, PC5.
15. I/Os can be configured with internal pull-up, pull-down or floating in Shutdown mode but the configuration is lost when exiting the Shutdown mode.

Debug mode

By default, the debug connection is lost if the application puts the MCU in Stop 0, Stop1, Stop 2, Standby or Shutdown mode while the debug features are used. This is due to the fact that the Cortex®-M4 core is no longer clocked.

However, by setting some configuration bits in the DBGMCU_CR register, the software can be debugged even when using the low-power modes extensively. For more details, refer to *Section 48.16.1: Debug support for low-power modes*.

5.3.1 Run mode

Slowing down system clocks

In Run mode, the speed of the system clocks (SYSCLK, HCLK, PCLK) can be reduced by programming the prescaler registers. These prescalers can also be used to slow down the peripherals before entering the Sleep mode.

For more details, refer to *Section 6.4.3: Clock configuration register (RCC_CFGR)*.

Peripheral clock gating

In Run mode, the HCLK and PCLK for individual peripherals and memories can be stopped at any time to reduce the power consumption.

To further reduce the power consumption in Sleep mode, the peripheral clocks can be disabled prior to executing the WFI or WFE instructions.

The peripheral clock gating is controlled by the RCC_AHBxENR and RCC_APBxENR registers.

Disabling the peripherals clocks in Sleep mode can be performed automatically by resetting the corresponding bit in the RCC_AHBxSMENR and RCC_APBxSMENR registers.

5.3.2 Low-power run mode (LP run)

To further reduce the consumption when the system is in Run mode, the regulator can be configured in low-power mode. In this mode, the system frequency should not exceed 2 MHz.

Please refer to the product datasheet for more details on voltage regulator and peripherals operating conditions.

I/O states in Low-power run mode

In Low-power run mode, all I/O pins keep the same state as in Run mode.

Entering the Low-power run mode

To enter the Low-power run mode, proceed as follows:

1. Optional: Jump into the SRAM and power-down the Flash by setting the RUN_PD bit in the *Flash access control register (FLASH_ACR)*.
2. Decrease the system clock frequency below 2 MHz.
3. Force the regulator in low-power mode by setting the LPR bit in the PWR_CR1 register.

Refer to *Table 24: Low-power run* on how to enter the Low-power run mode.

Exiting the Low-power run mode

To exit the Low-power run mode, proceed as follows:

1. Force the regulator in main mode by clearing the LPR bit in the PWR_CR1 register.
2. Wait until REGLPF bit is cleared in the PWR_SR2 register.
3. Increase the system clock frequency.

Refer to *Table 24: Low-power run* on how to exit the Low-power run mode.

Table 24. Low-power run

Low-power run mode	Description
Mode entry	Decrease the system clock frequency below 2 MHz LPR = 1
Mode exit	LPR = 0 Wait until REGLPF = 0 Increase the system clock frequency
Wakeup latency	Regulator wakeup time from low-power mode

5.3.3 Low power modes

Entering low power mode

Low power modes are entered by the MCU by executing the WFI (Wait For Interrupt), or WFE (Wait for Event) instructions, or when the SLEEPONEXIT bit in the Cortex®-M4 System Control register is set on Return from ISR.
Entering Low-power mode through WFI or WFE will be executed only if no interrupt is pending or no event is pending.

Exiting low power mode

From Sleep modes, and Stop modes the MCU exit low power mode depending on the way the low power mode was entered:

- If the WFI instruction or Return from ISR was used to enter the low power mode, any peripheral interrupt acknowledged by the NVIC can wake up the device.
- If the WFE instruction is used to enter the low power mode, the MCU exits the low power mode as soon as an event occurs. The wakeup event can be generated either by:
  - NVIC IRQ interrupt.

    - When SEVONPEND = 0 in the Cortex®-M4 System Control register. By enabling an interrupt in the peripheral control register and in the NVIC. When the MCU resumes from WFE, the peripheral interrupt pending bit and the NVIC peripheral IRQ channel pending bit (in the NVIC interrupt clear pending register) have to be cleared.

    Only NVIC interrupts with sufficient priority will wakeup and interrupt the MCU.

    - When SEVONPEND = 1 in the Cortex®-M4 System Control register.

    By enabling an interrupt in the peripheral control register and optionally in the NVIC. When the MCU resumes from WFE, the peripheral interrupt pending bit and

when enabled the NVIC peripheral IRQ channel pending bit (in the NVIC interrupt clear pending register) have to be cleared.

All NVIC interrupts will wakeup the MCU, even the disabled ones. Only enabled NVIC interrupts with sufficient priority will wakeup and interrupt the MCU.

– Event

Configuring a EXTI line in event mode. When the CPU resumes from WFE, it is not necessary to clear the EXTI peripheral interrupt pending bit or the NVIC IRQ channel pending bit as the pending bits corresponding to the event line is not set.

It may be necessary to clear the interrupt flag in the peripheral.

From Standby modes, and Shutdown modes the MCU exit low power mode through an external reset (NRST pin), an IWDG reset, a rising edge on one of the enabled WKUPx pins or a RTC event occurs (see *Figure 387: RTC block diagrams*).
After waking up from Standby or Shutdown mode, program execution restarts in the same way as after a Reset (boot pin sampling, option bytes loading, reset vector is fetched, etc.).

5.3.4 Sleep mode

I/O states in Sleep mode

In Sleep mode, all I/O pins keep the same state as in Run mode.

Entering the Sleep mode

The Sleep mode is entered according *Section : Entering low power mode*, when the SLEEPDEEP bit in the Cortex®-M4 System Control register is clear.

Refer to *Table 25: Sleep* for details on how to enter the Sleep mode.

Exiting the Sleep mode

The Sleep mode is exit according Section : Exiting low power mode.

Refer to *Table 25: Sleep* for more details on how to exit the Sleep mode.

Table 25. Sleep

Sleep-now mode	Description
Mode entry	WFI (Wait for Interrupt) or WFE (Wait for Event) while: – SLEEPDEEP = 0 – No interrupt (for WFI) or event (for WFE) is pending Refer to the Cortex®-M4 System Control register.
	On return from ISR while: – SLEEPDEEP = 0 and – SLEEPONEXIT = 1 – No interrupt is pending Refer to the Cortex®-M4 System Control register.

Table 25. Sleep (continued)

Sleep-now mode	Description
Mode exit	If WFI or return from ISR was used for entry Interrupt: refer to *Table 58: STM32L47x/L48x/L49x/L4Ax vector table* If WFE was used for entry and SEVONPEND = 0: Wakeup event: refer to *Section 14.3.2: Wakeup event management* If WFE was used for entry and SEVONPEND = 1: Interrupt even when disabled in NVIC: refer to *Table 58: STM32L47x/L48x/L49x/L4Ax vector table* or Wakeup event: refer to *Section 14.3.2: Wakeup event management*
Wakeup latency	None

5.3.5 Low-power sleep mode (LP sleep)

Please refer to the product datasheet for more details on voltage regulator and peripherals operating conditions.

I/O states in Low-power sleep mode

In Low-power sleep mode, all I/O pins keep the same state as in Run mode.

Entering the Low-power sleep mode

The Low-power sleep mode is entered from low-power run mode according *Section : Entering low power mode*, when the SLEEPDEEP bit in the Cortex®-M4 System Control register is clear.

Refer to *Table 26: Low-power sleep* for details on how to enter the Low-power sleep mode.

Exiting the Low-power sleep mode

The low-power Sleep mode is exit according *Section : Exiting low power mode*. When exiting the Low-power sleep mode by issuing an interrupt or an event, the MCU is in Low-power run mode.

Refer to *Table 26: Low-power sleep* for details on how to exit the Low-power sleep mode.

Table 26. Low-power sleep

Low-power sleep-now mode	Description
Mode entry	Low-power sleep mode is entered from the Low-power run mode. WFI (Wait for Interrupt) or WFE (Wait for Event) while: – SLEEPDEEP = 0 – No interrupt (for WFI) or event (for WFE) is pending Refer to the Cortex®-M4 System Control register.
	Low-power sleep mode is entered from the Low-power run mode. On return from ISR while: – SLEEPDEEP = 0 and – SLEEPONEXIT = 1 – No interrupt is pending Refer to the Cortex®-M4 System Control register.
Mode exit	If WFI or Return from ISR was used for entry Interrupt: refer to *Table 58: STM32L47x/L48x/L49x/L4Ax vector table* If WFE was used for entry and SEVONPEND = 0: Wakeup event: refer to *Section 14.3.2: Wakeup event management* If WFE was used for entry and SEVONPEND = 1: Interrupt even when disabled in NVIC: refer to *Table 58: STM32L47x/L48x/L49x/L4Ax vector table* Wakeup event: refer to *Section 14.3.2: Wakeup event management* After exiting the Low-power sleep mode, the MCU is in Low-power run mode.
Wakeup latency	None

5.3.6 Stop 0 mode

The Stop 0 mode is based on the Cortex®-M4 deepsleep mode combined with the peripheral clock gating. The voltage regulator is configured in main regulator mode. In Stop 0 mode, all clocks in the V_{CORE} domain are stopped; the PLL, the MSI, the HSI16 and the HSE oscillators are disabled. Some peripherals with the wakeup capability (I2Cx (x=1,2,3), U(S)ARTx(x=1,2...5) and LPUART) can switch on the HSI16 to receive a frame, and switch off the HSI16 after receiving the frame if it is not a wakeup frame. In this case, the HSI16 clock is propagated only to the peripheral requesting it.

SRAM1, SRAM2 and register contents are preserved.

The BOR is always available in Stop 0 mode. The consumption is increased when thresholds higher than V_{BOR0} are used.

I/O states in Stop 0 mode

In the Stop 0 mode, all I/O pins keep the same state as in the Run mode.

Entering the Stop 0 mode

The Stop 0 mode is entered according *Section : Entering low power mode*, when the SLEEPDEEP bit in the Cortex®-M4 System Control register is set.

Refer to *Table 27: Stop 0 mode* for details on how to enter the Stop 0 mode.

If Flash memory programming is ongoing, the Stop 0 mode entry is delayed until the memory access is finished.

If an access to the APB domain is ongoing, The Stop 0 mode entry is delayed until the APB access is finished.

In Stop 0 mode, the following features can be selected by programming individual control bits:

- Independent watchdog (IWDG): the IWDG is started by writing to its Key register or by hardware option. Once started, it cannot be stopped except by a Reset. See *Section 36.3: IWDG functional description*.
- real-time clock (RTC): this is configured by the RTCEN bit in the *Backup domain control register (RCC_BDCR)*
- Internal RC oscillator (LSI): this is configured by the LSION bit in the *Control/status register (RCC_CSR)*.
- External 32.768 kHz oscillator (LSE): this is configured by the LSEON bit in the *Backup domain control register (RCC_BDCR)*.

Several peripherals can be used in Stop 0 mode and can add consumption if they are enabled and clocked by LSI or LSE, or when they request the HSI16 clock: LCD, LPTIM1, LPTIM2, I2Cx (x=1,2,3,4) U(S)ARTx(x=1,2...5), LPUART.

The DAC_CHx (x=1,2), the OPAMPs and the comparators can be used in Stop 0 mode, the PVMx (x=1,2,3,4) and the PVD as well. If they are not needed, they must be disabled by software to save their power consumptions.

The ADCx (x=1,2,3), temperature sensor and VREFBUF buffer can consume power during the Stop 0 mode, unless they are disabled before entering this mode.

Exiting the Stop 0 mode

The Stop 0 mode is exit according *Section : Entering low power mode*.

Refer to *Table 27: Stop 0 mode* for details on how to exit Stop 0 mode.

When exiting Stop 0 mode by issuing an interrupt or a wakeup event, the HSI16 oscillator is selected as system clock if the bit STOPWUCK is set in *Clock configuration register (RCC_CFGR)*. The MSI oscillator is selected as system clock if the bit STOPWUCK is cleared. The wakeup time is shorter when HSI16 is selected as wakeup system clock. The MSI selection allows wakeup at higher frequency, up to 48 MHz.

When exiting the Stop 0 mode, the MCU is either in Run mode Range 1 or Run Mode Range 2 depending on VOS bit in PWR_CR1.

Table 27. Stop 0 mode

Stop 0 mode	Description
Mode entry	WFI (Wait for Interrupt) or WFE (Wait for Event) while: – SLEEPDEEP bit is set in Cortex®-M4 System Control register – No interrupt (for WFI) or event (for WFE) is pending – LPMS = “000” in PWR_CR1
	On Return from ISR while: – SLEEPDEEP bit is set in Cortex®-M4 System Control register – SLEEPONEXIT = 1 – No interrupt is pending – LPMS = “000” in PWR_CR1
	Note: To enter Stop 0 mode, all EXTI Line pending bits (in Pending register 1 (EXTI_PR1)), and the peripheral flags generating wakeup interrupts must be cleared. Otherwise, the Stop 0 mode entry procedure is ignored and program execution continues.
Mode exit	If WFI or Return from ISR was used for entry Any EXTI Line configured in Interrupt mode (the corresponding EXTI Interrupt vector must be enabled in the NVIC). The interrupt source can be external interrupts or peripherals with wakeup capability. Refer to *Table 58: STM32L47x/L48x/L49x/L4Ax vector table*. If WFE was used for entry and SEVONPEND = 0: Any EXTI Line configured in event mode. Refer to *Section 14.3.2: Wakeup event management*. If WFE was used for entry and SEVONPEND = 1: Any EXTI Line configured in Interrupt mode (even if the corresponding EXTI Interrupt vector is disabled in the NVIC). The interrupt source can be external interrupts or peripherals with wakeup capability. Refer to*Table 58: STM32L47x/L48x/L49x/L4Ax vector table*. Wakeup event: refer to *Section 14.3.2: Wakeup event management*
Wakeup latency	Longest wakeup time between: MSI or HSI16 wakeup time and Flash wakeup time from Stop 0 mode.

5.3.7 Stop 1 mode

The Stop 1 mode is the same as Stop 0 mode except that the main regulator is OFF, and only the low-power regulator is ON. Stop 1 mode can be entered from Run mode and from Low-power run mode.

Refer to *Table 28: Stop 1 mode* for details on how to enter and exit Stop 1 mode.

Table 28. Stop 1 mode

Stop 1 mode	Description
Mode entry	WFI (Wait for Interrupt) or WFE (Wait for Event) while: – SLEEPDEEP bit is set in Cortex®-M4 System Control register – No interrupt (for WFI) or event (for WFE) is pending – LPMS = “001” in PWR_CR1
	On Return from ISR while: – SLEEPDEEP bit is set in Cortex®-M4 System Control register – SLEEPONEXIT = 1 – No interrupt is pending – LPMS = “001” in PWR_CR1
	Note: To enter Stop 1 mode, all EXTI Line pending bits (in Pending register 1 (EXTI_PR1)), and the peripheral flags generating wakeup interrupts must be cleared. Otherwise, the Stop 1 mode entry procedure is ignored and program execution continues.
Mode exit	If WFI or Return from ISR was used for entry Any EXTI Line configured in Interrupt mode (the corresponding EXTI Interrupt vector must be enabled in the NVIC). The interrupt source can be external interrupts or peripherals with wakeup capability. Refer to *Table 58: STM32L47x/L48x/L49x/L4Ax vector table*. If WFE was used for entry and SEVONPEND = 0: Any EXTI Line configured in event mode. Refer to *Section 14.3.2: Wakeup event management*. If WFE was used for entry and SEVONPEND = 1: Any EXTI Line configured in Interrupt mode (even if the corresponding EXTI Interrupt vector is disabled in the NVIC). The interrupt source can be external interrupts or peripherals with wakeup capability. Refer to*Table 58: STM32L47x/L48x/L49x/L4Ax vector table*. Wakeup event: refer to *Section 14.3.2: Wakeup event management*
Wakeup latency	Longest wakeup time between: MSI or HSI16 wakeup time and regulator wakeup time from Low-power mode + Flash wakeup time from Stop 1 mode.

5.3.8 Stop 2 mode

The Stop 2 mode is based on the Cortex®-M4 deepsleep mode combined with peripheral clock gating. In Stop 2 mode, all clocks in the V_{CORE} domain are stopped, the PLL, the MSI, the HSI16 and the HSE oscillators are disabled. Some peripherals with wakeup capability (I2C3 and LPUART) can switch on the HSI16 to receive a frame, and switch off the HSI16 after receiving the frame if it is not a wakeup frame. In this case the HSI16 clock is propagated only to the peripheral requesting it.

SRAM1, SRAM2 and register contents are preserved.

The BOR is always available in Stop 2 mode. The consumption is increased when thresholds higher than V_{BOR0} are used.

Note: The comparators outputs, the LPUART outputs and the LPTIM1 outputs are forced to low speed (OSPEEDy=00) during the Stop 2 mode.

I/O states in Stop 2 mode

In the Stop 2 mode, all I/O pins keep the same state as in the Run mode.

Entering Stop 2 mode

The Stop 2 mode is entered according *Section : Entering low power mode*, when the SLEEPDEEP bit in the Cortex®-M4 System Control register is set.

Refer to *Table 29: Stop 2 mode* for details on how to enter the Stop 2 mode.

Stop 2 mode can only be entered from Run mode. It is not possible to enter Stop 2 mode from the Low-power run mode.

If Flash memory programming is ongoing, the Stop 2 mode entry is delayed until the memory access is finished.

If an access to the APB domain is ongoing, The Stop 2 mode entry is delayed until the APB access is finished.

In Stop 2 mode, the following features can be selected by programming individual control bits:

- Independent watchdog (IWDG): the IWDG is started by writing to its Key register or by hardware option. Once started it cannot be stopped except by a Reset. See *Section 36.3: IWDG functional description* in *Section 36: Independent watchdog (IWDG)*.
- Real-time clock (RTC): this is configured by the RTCEN bit in the *Backup domain control register (RCC_BDCR)*
- Internal RC oscillator (LSI): this is configured by the LSION bit in the *Control/status register (RCC_CSR)*.
- External 32.768 kHz oscillator (LSE): this is configured by the LSEON bit in the *Backup domain control register (RCC_BDCR)*.

Several peripherals can be used in Stop 2 mode and can add consumption if they are enabled and clocked by LSI or LSE, or when they request the HSI16 clock: LCD, LPTIM1, I2C3, LPUART.

The comparators can be used in Stop 2 mode, the PVMx (x=1,2,3,4) and the PVD as well. If they are not needed, they must be disabled by software to save their power consumptions.

The ADCx, OPAMPx, DAC_CHx, temperature sensor and VREFBUF buffer can consume power during Stop 2 mode, unless they are disabled before entering this mode.

All the peripherals which cannot be enabled in Stop 2 mode must be either disabled by clearing the Enable bit in the peripheral itself, or put under reset state by setting the corresponding bit in the *AHB1 peripheral reset register (RCC_AHB1RSTR)*, *AHB2 peripheral reset register (RCC_AHB2RSTR)*, *AHB3 peripheral reset register (RCC_AHB3RSTR)*, *APB1 peripheral reset register 1 (RCC_APB1RSTR1)*, *APB1 peripheral reset register 2 (RCC_APB1RSTR2)*, *APB2 peripheral reset register (RCC_APB2RSTR)*.

Exiting Stop 2 mode

The Stop 2 mode is exit according *Section : Exiting low power mode*.

Refer to *Table 29: Stop 2 mode* for details on how to exit Stop 2 mode.

When exiting Stop 2 mode by issuing an interrupt or a wakeup event, the HSI16 oscillator is selected as system clock if the bit STOPWUCK is set in *Clock configuration register (RCC_CFGR)*. The MSI oscillator is selected as system clock if the bit STOPWUCK is cleared. The wakeup time is shorter when HSI16 is selected as wakeup system clock. The MSI selection allows wakeup at higher frequency, up to 48 MHz.

When exiting the Stop 2 mode, the MCU is in Run mode (Range 1 or Range 2 depending on VOS bit in PWR_CR1).

Table 29. Stop 2 mode

Stop 2 mode	Description
Mode entry	WFI (Wait for Interrupt) or WFE (Wait for Event) while: – SLEEPDEEP bit is set in Cortex®-M4 System Control register – No interrupt (for WFI) or event (for WFE) is pending – LPMS = “010” in PWR_CR1
	On return from ISR while: – SLEEPDEEP bit is set in Cortex®-M4 System Control register – SLEEPONEXIT = 1 – No interrupt is pending – LPMS = “010” in PWR_CR1
	Note: To enter Stop 2 mode, all EXTI Line pending bits (in Pending register 1 (EXTI_PR1)), and the peripheral flags generating wakeup interrupts must be cleared. Otherwise, the Stop mode entry procedure is ignored and program execution continues.
Mode exit	If WFI or Return from ISR was used for entry: Any EXTI Line configured in Interrupt mode (the corresponding EXTI Interrupt vector must be enabled in the NVIC). The interrupt source can be external interrupts or peripherals with wakeup capability. Refer to *Table 58: STM32L47x/L48x/L49x/L4Ax vector table*. If WFE was used for entry and SEVONPEND = 0: Any EXTI Line configured in event mode. Refer to *Section 14.3.2: Wakeup event management*. If WFE was used for entry and SEVONPEND = 1: Any EXTI Line configured in Interrupt mode (even if the corresponding EXTI Interrupt vector is disabled in the NVIC). The interrupt source can be external interrupts or peripherals with wakeup capability. Refer to *Table 58: STM32L47x/L48x/L49x/L4Ax vector table*. Any EXTI Line configured in event mode. Refer to *Section 14.3.2: Wakeup event management*.
Wakeup latency	Longest wakeup time between: MSI or HSI16 wakeup time and regulator wakeup time from Low-power mode + Flash wakeup time from Stop 2 mode.

5.3.9 Standby mode

The Standby mode allows to achieve the lowest power consumption with BOR. It is based on the Cortex®-M4 deepsleep mode, with the voltage regulators disabled (except when SRAM2 content is preserved). The PLL, the HSI16, the MSI and the HSE oscillators are also switched off.

SRAM1 and register contents are lost except for registers in the Backup domain and Standby circuitry (see *Figure 9*). SRAM2 content can be preserved if the bit RRS is set in the PWR_CR3 register. In this case the Low-power regulator is ON and provides the supply to SRAM2 only.

The BOR is always available in Standby mode. The consumption is increased when thresholds higher than V_{BOR0} are used.

I/O states in Standby mode

In the Standby mode, the IO's are by default in floating state. If the APC bit of PWR_CR3 register has been set, the I/Os can be configured either with a pull-up (refer to PWR_PUCRx registers (x=A,B,C,D,E,F,G,H)), or with a pull-down (refer to PWR_PDCRx registers (x=A,B,C,D,E,F,GH)), or can be kept in analog state if none of the PWR_PUCRx or PWR_PDCRx register has been set. The pull-down configuration has highest priority over pull-up configuration in case both PWR_PUCRx and PWR_PDCRx are set for the same IO.

Some I/Os (listed in *Section 8.4.1: General-purpose I/O (GPIO)*) are used for JTAG/SW debug and can only be configured to their respective reset pull-up or pull-down state during Standby mode setting their respective bit in the PWR_PUCRx or PWR_PDCRx registers to '1', or will be configured to floating state if the bit is kept at '0'.

The RTC outputs on PC13 are functional in Standby mode. PC14 and PC15 used for LSE are also functional. 5 wakeup pins (WKUPx, x=1,2...5) and the 3 RTC tampers are available.

Entering Standby mode

The Standby mode is entered according *Section : Entering low power mode*, when the SLEEPDEEP bit in the Cortex®-M4 System Control register is set.

Refer to *Table 30: Standby mode* for details on how to enter Standby mode.

In Standby mode, the following features can be selected by programming individual control bits:

- Independent watchdog (IWDG): the IWDG is started by writing to its Key register or by hardware option. Once started it cannot be stopped except by a reset. See *Section 36.3: IWDG functional description* in *Section 36: Independent watchdog (IWDG)*.
- real-time clock (RTC): this is configured by the RTCEN bit in the Backup domain control register (RCC_BDCR)
- Internal RC oscillator (LSI): this is configured by the LSION bit in the Control/status register (RCC_CSR).
- External 32.768 kHz oscillator (LSE): this is configured by the LSEON bit in the Backup domain control register (RCC_BDCR)

Exiting Standby mode

The Standby mode is exited according *Section : Entering low power mode*. The SBF status flag in the *Power control register 3 (PWR_CR3)* indicates that the MCU was in Standby mode. All registers are reset after wakeup from Standby except for *Power control register 3 (PWR_CR3)*.

Refer to *Table 30: Standby mode* for more details on how to exit Standby mode.

When exiting Standby mode, I/O's that were configured with pull-up or pull-down during Standby through registers PWR_PUCRx or PWR_PDCRx will keep this configuration upon exiting Standby mode until the bit APC of PWR_CR3 register has been cleared. Once the bit APC is cleared, they will be either configured to their reset values or to the pull-up/pull-down state according the GPIOx_PUPDR registers. The content of the PWR_PUCRx or PWR_PDCRx registers however is not lost and can be re-used for a sub-sequent entering into Standby mode.

Some I/Os (listed in *Section 8.4.1: General-purpose I/O (GPIO)*) are used for JTAG/SW debug and have internal pull-up or pull-down activated after reset so will be configured at this reset value as well when exiting Standby mode.

For IO's, with a pull-up or pull-down pre-defined after reset (some JTAG/SW IO's) or with GPIOx_PUPDR programming done after exiting from Standby, in case those programming is different from the PWR_PUCRx or PWR_PDCRx programmed value during Standby, both a pull-down and pull-up will be applied until the bit APC is cleared, releasing the PWR_PUCRx or PWR_PDCRx programmed value.

Table 30. Standby mode

Standby mode	Description
Mode entry	WFI (Wait for Interrupt) or WFE (Wait for Event) while: – SLEEPDEEP bit is set in Cortex®-M4 System Control register – No interrupt (for WFI) or event (for WFE) is pending – LPMS = "011" in PWR_CR1 – WUFx bits are cleared in power status register 1 (PWR_SR1)
	On return from ISR while: – SLEEPDEEP bit is set in Cortex®-M4 System Control register – SLEEPONEXIT = 1 – No interrupt is pending – LPMS = "011" in PWR_CR1 and – WUFx bits are cleared in power status register 1 (PWR_SR1) – The RTC flag corresponding to the chosen wakeup source (RTC Alarm A, RTC Alarm B, RTC wakeup, tamper or timestamp flags) is cleared
Mode exit	WKUPx pin edge, RTC event, external Reset in NRST pin, IWDG Reset, BOR reset
Wakeup latency	Reset phase

5.3.10 Shutdown mode

The Shutdown mode allows to achieve the lowest power consumption. It is based on the deepsleep mode, with the voltage regulator disabled. The V_{CORE} domain is consequently powered off. The PLL, the HSI16, the MSI, the LSI and the HSE oscillators are also switched off.

SRAM1, SRAM2 and register contents are lost except for registers in the Backup domain. The BOR is not available in Shutdown mode. No power voltage monitoring is possible in this mode, therefore the switch to Backup domain is not supported.

I/O states in Shutdown mode

In the Shutdown mode, are by default in floating state. If the APC bit of PWR_CR3 register has been set, the I/Os can be configured either with a pull-up (refer to PWR_PUCRx registers (x=A,B,C,D,E,F,G,H), or with a pull-down (refer to PWR_PDCRx registers (x=A,B,C,D,E,F,G,H)), or can be kept in analog state if none of the PWR_PUCRx or PWR_PDCRx register has been set. The pull-down configuration has highest priority over pull-up configuration in case both PWR_PUCRx and PWR_PDCRx are set for the same IO. However this configuration is lost when exiting the Shutdown mode due to the power-on reset.

Some I/Os (listed in *Section 8.4.1: General-purpose I/O (GPIO)*) are used for JTAG/SW debug and can only be configured to their respective reset pull-up or pull-down state during Standby mode setting their respective bit in the PWR_PUCRx or PWR_PDCRx registers to ‘1’, or will be configured to floating state if the bit is kept at ‘0’.

The RTC outputs on PC13 are functional in Shutdown mode. PC14 and PC15 used for LSE are also functional. 5 wakeup pins (WKUPx, x=1,2...5) and the 3 RTC tampers are available.

Entering Shutdown mode

The Shutdown mode is entered according *Entering low power mode*, when the SLEEPDEEP bit in the Cortex®-M4 System Control register is set.

Refer to *Table 31: Shutdown mode* for details on how to enter Shutdown mode.

In Shutdown mode, the following features can be selected by programming individual control bits:

- real-time clock (RTC): this is configured by the RTCEN bit in the Backup domain control register (RCC_BDCR). Caution: in case of VDD power-down the RTC content will be lost.
- external 32.768 kHz oscillator (LSE): this is configured by the LSEON bit in the Backup domain control register (RCC_BDCR)

Exiting Shutdown mode

The Shutdown mode is exit according *Section : Exiting low power mode*. A power-on reset occurs when exiting from Shutdown mode. All registers (except for the ones in the Backup domain) are reset after wakeup from Shutdown.

Refer to *Table 31: Shutdown mode* for more details on how to exit Shutdown mode.

When exiting Shutdown mode, I/Os that were configured with pull-up or pull-down during Shutdown through registers PWR_PUCRx or PWR_PDCRx will lose their configuration and

will be configured in floating state or to their pull-up pull-down reset value (for some I/Os listed in *Section 8.4.1: General-purpose I/O (GPIO)*).

Table 31. Shutdown mode

Shutdown mode	Description
Mode entry	WFI (Wait for Interrupt) or WFE (Wait for Event) while: – SLEEPDEEP bit is set in Cortex®-M4 System Control register – No interrupt (for WFI) or event (for WFE) is pending – LPMS = “1XX” in PWR_CR1 – WUFx bits are cleared in power status register 1 (PWR_SR1)
	On return from ISR while: – SLEEPDEEP bit is set in Cortex®-M4 System Control register – SLEEPONEXT = 1 – No interrupt is pending – LPMS = “1XX” in PWR_CR1 and – WUFx bits are cleared in power status register 1 (PWR_SR1) – The RTC flag corresponding to the chosen wakeup source (RTC Alarm A, RTC Alarm B, RTC wakeup, tamper or timestamp flags) is cleared
Mode exit	WKUPx pin edge, RTC event, external Reset in NRST pin
Wakeup latency	Reset phase

5.3.11 Auto-wakeup from low-power mode

The RTC can be used to wakeup the MCU from low-power mode without depending on an external interrupt (Auto-wakeup mode). The RTC provides a programmable time base for waking up from Stop (0, 1 or 2) or Standby mode at regular intervals. For this purpose, two of the three alternative RTC clock sources can be selected by programming the RTCSEL[1:0] bits in the *Backup domain control register (RCC_BDCR)*:

- Low-power 32.768 kHz external crystal oscillator (LSE OSC)
  This clock source provides a precise time base with very low-power consumption.
- Low-power internal RC Oscillator (LSI)
  This clock source has the advantage of saving the cost of the 32.768 kHz crystal. This internal RC Oscillator is designed to add minimum power consumption.

To wakeup from Stop mode with an RTC alarm event, it is necessary to:

- Configure the EXTI Line 18 to be sensitive to rising edge
- Configure the RTC to generate the RTC alarm

To wakeup from Standby mode, there is no need to configure the EXTI Line 18.

To wakeup from Stop mode with an RTC wakeup event, it is necessary to:

- Configure the EXTI Line 20 to be sensitive to rising edge
- Configure the RTC to generate the RTC alarm

To wakeup from Standby mode, there is no need to configure the EXTI Line 20.

The LCD Start of frame interrupt can also be used as a periodic wakeup from Stop (0, 1 or 2) mode. The LCD is not available in Standby mode.

The LCD clock is derived from the RTC clock selected by RTCSEL[1:0].

5.4 PWR registers

The peripheral registers can be accessed by half-words (16-bit) or words (32-bit).

5.4.1 Power control register 1 (PWR_CR1)

Address offset: 0x00

Reset value: 0x0000 0200. This register is reset after wakeup from Standby mode.

31	30	29	28	27	26	25	24	23	22	21	20	19	18	17	16
Res.	Res.	Res.	Res.	Res.	Res.	Res.	Res.	Res.	Res.	Res.	Res.	Res.	Res.	Res.	Res.

15	14	13	12	11	10	9	8	7	6	5	4	3	2	1	0
Res.	LPR	Res.	Res.	Res.	VOS[1:0]		DBP	Res.	Res.	Res.	Res.	Res.	LPMS[2:0]		
	rw				rw	rw	rw						rw	rw	rw

Bits 31:15 Reserved, must be kept at reset value.

Bit 14 **LPR**: Low-power run

When this bit is set, the regulator is switched from main mode (MR) to low-power mode (LPR).

Note: Stop 2 mode cannot be entered when LPR bit is set. Stop 1 is entered instead.

Bits 13:11 Reserved, must be kept at reset value.

Bits 10:9 **VOS**: Voltage scaling range selection

00: Cannot be written (forbidden by hardware)
01: Range 1
10: Range 2
11: Cannot be written (forbidden by hardware)

Bit 8 **DBP**: Disable backup domain write protection

In reset state, the RTC and backup registers are protected against parasitic write access. This bit must be set to enable write access to these registers.

0: Access to RTC and Backup registers disabled
1: Access to RTC and Backup registers enabled

Bits 7:3 Reserved, must be kept at reset value.

Bits 2:0 **LPMS[2:0]**: Low-power mode selection

These bits select the low-power mode entered when CPU enters the deepsleep mode.

000: Stop 0 mode
001: Stop 1 mode
010: Stop 2 mode
011: Standby mode
1xx: Shutdown mode

Note: If LPR bit is set, Stop 2 mode cannot be selected and Stop 1 mode shall be entered instead of Stop 2.

In Standby mode, SRAM2 can be preserved or not, depending on RRS bit configuration in PWR_CR3.

5.4.2 Power control register 2 (PWR_CR2)

Address offset: 0x04

Reset value: 0x0000 0000. This register is reset when exiting the Standby mode.

31	30	29	28	27	26	25	24	23	22	21	20	19	18	17	16
Res.	Res.	Res.	Res.	Res.	Res.	Res.	Res.	Res.	Res.	Res.	Res.	Res.	Res.	Res.	Res.
15	14	13	12	11	10	9	8	7	6	5	4	3	2	1	0
Res.	Res.	Res.	Res.	Res.	USV	IOSV	Res.	PVME4	PVME3	PVME2	PVME1	PLS[2:0]			PVDE
					rw	rw		rw	rw	rw	rw	rw	rw	rw	rw

Bits 31:11 Reserved, must be kept at reset value.

Bit 10 **USV**: V_{DDUSB} USB supply valid (this bit is reserved for STM32L471 devices)
This bit is used to validate the V_{DDUSB} supply for electrical and logical isolation purpose. Setting this bit is mandatory to use the USB OTG_FS peripheral. If V_{DDUSB} is not always present in the application, the PVM can be used to determine whether this supply is ready or not.
0: V_{DDUSB} is not present. Logical and electrical isolation is applied to ignore this supply.
1: V_{DDUSB} is valid.

Bit 9 **IOSV**: V_{DDIO2} Independent I/Os supply valid
This bit is used to validate the V_{DDIO2} supply for electrical and logical isolation purpose. Setting this bit is mandatory to use PG[15:2]. If V_{DDIO2} is not always present in the application, the PVM can be used to determine whether this supply is ready or not.
0: V_{DDIO2} is not present. Logical and electrical isolation is applied to ignore this supply.
1: V_{DDIO2} is valid.

Bit 8 Reserved, must be kept at reset value.

Bit 7 **PVME4**: Peripheral voltage monitoring 4 enable: V_{DDA} vs. 1.8 V
0: PVM4 (V_{DDA} monitoring vs. 1.8 V threshold) disable.
1: PVM4 (V_{DDA} monitoring vs. 1.8 V threshold) enable.

Bit 6 **PVME3**: Peripheral voltage monitoring 3 enable: V_{DDA} vs. 1.62 V
0: PVM3 (V_{DDA} monitoring vs. 1.62 V threshold) disable.
1: PVM3 (V_{DDA} monitoring vs. 1.62 V threshold) enable.

Bit 5 **PVME2**: Peripheral voltage monitoring 2 enable: V_{DDIO2} vs. 0.9 V
0: PVM2 (V_{DDIO2} monitoring vs. 0.9 V threshold) disable.
1: PVM2 (V_{DDIO2} monitoring vs. 0.9 V threshold) enable.

Bit 4 **PVME1**: Peripheral voltage monitoring 1 enable: V_{DDUSB} vs. 1.2 V (this bit is reserved for STM32L471 devices)

0: PVM1 (V_{DDUSB} monitoring vs. 1.2 V threshold) disable.
1: PVM1 (V_{DDUSB} monitoring vs. 1.2 V threshold) enable.

Bits 3:1 **PLS[2:0]**: Power voltage detector level selection.

These bits select the voltage threshold detected by the power voltage detector:
000: V_{PVD0} around 2.0 V
001: V_{PVD1} around 2.2 V
010: V_{PVD2} around 2.4 V
011: V_{PVD3} around 2.5 V
100: V_{PVD4} around 2.6 V
101: V_{PVD5} around 2.8 V
110: V_{PVD6} around 2.9 V
111: External input analog voltage PVD_IN (compared internally to VREFINT)

Note: These bits are write-protected when the bit PVDL (PVD Lock) is set in the SYSCFG_CBR register.
These bits are reset only by a system reset.

Bit 0 **PVDE**: Power voltage detector enable

0: Power voltage detector disable.
1: Power voltage detector enable.

Note: This bit is write-protected when the bit PVDL (PVD Lock) is set in the SYSCFG_CBR register.
This bit is reset only by a system reset.

5.4.3 Power control register 3 (PWR_CR3)

Address offset: 0x08

Reset value: 0x0000 8000. This register is not reset when exiting Standby modes and with the PWRRST bit in the RCC_APB1RSTR1 register.

Access: Additional APB cycles are needed to access this register vs. a standard APB access (3 for a write and 2 for a read).

31	30	29	28	27	26	25	24	23	22	21	20	19	18	17	16
Res.	Res.	Res.	Res.	Res.	Res.	Res.	Res.	Res.	Res.	Res.	Res.	Res.	Res.	Res.	Res.

15	14	13	12	11	10	9	8	7	6	5	4	3	2	1	0
EIWUL	Res.	Res.	Res.	Res.	APC	Res.	RRS	Res.	Res.	Res.	EWUP 5	EWUP 4	EWUP 3	EWUP 2	EWUP 1
rw					rw		rw				rw	rw	rw	rw	rw

Bits 31:16 Reserved, must be kept at reset value.

Bit 15 **EIWUL**: Enable internal wakeup line

0: Internal wakeup line disable.
1: Internal wakeup line enable.

Bits 14:11 Reserved, must be kept at reset value.

Bit 10 **APC**: Apply pull-up and pull-down configuration

When this bit is set, the I/O pull-up and pull-down configurations defined in the PWR_PUCRx and PWR_PDCRx registers are applied. When this bit is cleared, the PWR_PUCRx and PWR_PDCRx registers are not applied to the I/Os, instead the I/Os will be in floating mode during Standby or configured according GPIO controller GPIOx_PUPDR register during RUN mode.

Bit 9 Reserved, must be kept at reset value.

Bit 8 **RRS**: SRAM2 retention in Standby mode

0: SRAM2 is powered off in Standby mode (SRAM2 content is lost).

1: SRAM2 is powered by the low-power regulator in Standby mode (SRAM2 content is kept).

Bits 7:5 Reserved, must be kept at reset value.

Bit 4 **EWUP5**: Enable Wakeup pin WKUP5

When this bit is set, the external wakeup pin WKUP5 is enabled and triggers a wakeup from Standby or Shutdown event when a rising or a falling edge occurs.The active edge is configured via the WP5 bit in the PWR_CR4 register.

Bit 3 **EWUP4**: Enable Wakeup pin WKUP4

When this bit is set, the external wakeup pin WKUP4 is enabled and triggers a wakeup from Standby or Shutdown event when a rising or a falling edge occurs. The active edge is configured via the WP4 bit in the PWR_CR4 register.

Bit 2 **EWUP3**: Enable Wakeup pin WKUP3

When this bit is set, the external wakeup pin WKUP3 is enabled and triggers a wakeup from Standby or Shutdown event when a rising or a falling edge occurs. The active edge is configured via the WP3 bit in the PWR_CR4 register.

Bit 1 **EWUP2**: Enable Wakeup pin WKUP2

When this bit is set, the external wakeup pin WKUP2 is enabled and triggers a wakeup from Standby or Shutdown event when a rising or a falling edge occurs. The active edge is configured via the WP2 bit in the PWR_CR4 register.

Bit 0 **EWUP1**: Enable Wakeup pin WKUP1

When this bit is set, the external wakeup pin WKUP1 is enabled and triggers a wakeup from Standby or Shutdown event when a rising or a falling edge occurs. The active edge is configured via the WP1 bit in the PWR_CR4 register.

5.4.4 Power control register 4 (PWR_CR4)

Address offset: 0x0C

Reset value: 0x0000 0000. This register is not reset when exiting Standby modes and with the PWRRST bit in the RCC_APB1RSTR1 register.

Access: Additional APB cycles are needed to access this register vs. a standard APB access (3 for a write and 2 for a read).

31	30	29	28	27	26	25	24	23	22	21	20	19	18	17	16
Res.	Res.	Res.	Res.	Res.	Res.	Res.	Res.	Res.	Res.	Res.	Res.	Res.	Res.	Res.	Res.

15	14	13	12	11	10	9	8	7	6	5	4	3	2	1	0
Res.	Res.	Res.	Res.	Res.	Res.	VBRS	VBE	Res.	Res.	Res.	WP5	WP4	WP3	WP2	WP1
						rw	rw				rw	rw	rw	rw	rw

Bits 31:10 Reserved, must be kept at reset value.

Bit 9 **VBRS**: V_{BAT} battery charging resistor selection
0: Charge V_{BAT} through a 5 kOhms resistor
1: Charge V_{BAT} through a 1.5 kOhms resistor

Bit 8 **VBE**: V_{BAT} battery charging enable
0: V_{BAT} battery charging disable
1: V_{BAT} battery charging enable

Bits 7:5 Reserved, must be kept at reset value.

Bit 4 **WP5**: Wakeup pin WKUP5 polarity
This bit defines the polarity used for an event detection on external wake-up pin, WKUP5
0: Detection on high level (rising edge)
1: Detection on low level (falling edge)

Bit 3 **WP4**: Wakeup pin WKUP4 polarity
This bit defines the polarity used for an event detection on external wake-up pin, WKUP4
0: Detection on high level (rising edge)
1: Detection on low level (falling edge)

Bit 2 **WP3**: Wakeup pin WKUP3 polarity
This bit defines the polarity used for an event detection on external wake-up pin, WKUP3
0: Detection on high level (rising edge)
1: Detection on low level (falling edge)

Bit 1 **WP2**: Wakeup pin WKUP2 polarity
This bit defines the polarity used for an event detection on external wake-up pin, WKUP2
0: Detection on high level (rising edge)
1: Detection on low level (falling edge)

Bit 0 **WP1**: Wakeup pin WKUP1 polarity
This bit defines the polarity used for an event detection on external wake-up pin, WKUP1
0: Detection on high level (rising edge)
1: Detection on low level (falling edge)

5.4.5 Power status register 1 (PWR_SR1)

Address offset: 0x10

Reset value: 0x0000 0000. This register is not reset when exiting Standby modes and with the PWRRST bit in the RCC_APB1RSTR1 register.

Access: 2 additional APB cycles are needed to read this register vs. a standard APB read.

31	30	29	28	27	26	25	24	23	22	21	20	19	18	17	16
Res.	Res.	Res.	Res.	Res.	Res.	Res.	Res.	Res.	Res.	Res.	Res.	Res.	Res.	Res.	Res.

15	14	13	12	11	10	9	8	7	6	5	4	3	2	1	0
WUFI	Res.	Res.	Res.	Res.	Res.	Res.	SBF	Res.	Res.	Res.	WUF5	WUF4	WUF3	WUF2	WUF1
r							r				r	r	r	r	r

Bits 31:16 Reserved, must be kept at reset value.

Bit 15 **WUFI**: Wakeup flag internal

This bit is set when a wakeup is detected on the internal wakeup line. It is cleared when all internal wakeup sources are cleared.

Bits 14:9 Reserved, must be kept at reset value.

Bit 8 **SBF**: Standby flag

This bit is set by hardware when the device enters the Standby mode and is cleared by setting the CSBF bit in the PWR_SCR register, or by a power-on reset. It is not cleared by the system reset.

0: The device did not enter the Standby mode

1: The device entered the Standby mode

Bits 7:5 Reserved, must be kept at reset value.

Bit 4 **WUF5**: Wakeup flag 5

This bit is set when a wakeup event is detected on wakeup pin, WKUP5. It is cleared by writing ‘1’ in the CWUF5 bit of the PWR_SCR register.

Bit 3 **WUF4**: Wakeup flag 4

This bit is set when a wakeup event is detected on wakeup pin,WKUP4. It is cleared by writing ‘1’ in the CWUF4 bit of the PWR_SCR register.

Bit 2 **WUF3**: Wakeup flag 3

This bit is set when a wakeup event is detected on wakeup pin, WKUP3. It is cleared by writing ‘1’ in the CWUF3 bit of the PWR_SCR register.

Bit 1 **WUF2**: Wakeup flag 2

This bit is set when a wakeup event is detected on wakeup pin, WKUP2. It is cleared by writing ‘1’ in the CWUF2 bit of the PWR_SCR register.

Bit 0 **WUF1**: Wakeup flag 1

This bit is set when a wakeup event is detected on wakeup pin, WKUP1. It is cleared by writing ‘1’ in the CWUF1 bit of the PWR_SCR register.

5.4.6 Power status register 2 (PWR_SR2)

Address offset: 0x14

Reset value: 0x0000 0000. This register is partially reset when exiting Standby/Shutdown modes.

31	30	29	28	27	26	25	24	23	22	21	20	19	18	17	16
Res.	Res.	Res.	Res.	Res.	Res.	Res.	Res.	Res.	Res.	Res.	Res.	Res.	Res.	Res.	Res.
15	14	13	12	11	10	9	8	7	6	5	4	3	2	1	0
PVMO4	PVMO3	PVMO2	PVMO1	PVDO	VOSF	REGLPF	REGLPS	Res.	Res.	Res.	Res.	Res.	Res.	Res.	Res.
r	r	r	r	r	r	r	r								

Bits 31:16 Reserved, must be kept at reset value.

Bit 15 **PVMO4**: Peripheral voltage monitoring output: V_{DDA} vs. 1.8 V

0: V_{DDA} voltage is above PVM4 threshold (around 1.8 V).

1: V_{DDA} voltage is below PVM4 threshold (around 1.8 V).

Note: PVMO4 is cleared when PVM4 is disabled (PVME4 = 0). After enabling PVM4, the PVM4 output is valid after the PVM4 wakeup time.

Bit 14 **PVMO3**: Peripheral voltage monitoring output: V_{DDA} vs. 1.62 V

0: V_{DDA} voltage is above PVM3 threshold (around 1.62 V).

1: V_{DDA} voltage is below PVM3 threshold (around 1.62 V).

Note: PVMO3 is cleared when PVM3 is disabled (PVME3 = 0). After enabling PVM3, the PVM3 output is valid after the PVM3 wakeup time.

Bit 13 **PVMO2**: Peripheral voltage monitoring output: V_{DDIO2} vs. 0.9 V

0: V_{DDIO2} voltage is above PVM2 threshold (around 0.9 V).

1: V_{DDIO2} voltage is below PVM2 threshold (around 0.9 V).

Note: PVMO2 is cleared when PVM2 is disabled (PVME2 = 0). After enabling PVM2, the PVM2 output is valid after the PVM2 wakeup time.

Bit 12 **PVMO1**: Peripheral voltage monitoring output: V_{DDUSB} vs. 1.2 V (this bit is reserved on STM32L471)

0: V_{DDUSB} voltage is above PVM1 threshold (around 1.2 V).

1: V_{DDUSB} voltage is below PVM1 threshold (around 1.2 V).

Note: PVMO1 is cleared when PVM1 is disabled (PVME1 = 0). After enabling PVM1, the PVM1 output is valid after the PVM1 wakeup time.

Bit 11 **PVDO**: Power voltage detector output

0: V_{DD} is above the selected PVD threshold

1: V_{DD} is below the selected PVD threshold

Bit 10 **VOSF**: Voltage scaling flag

A delay is required for the internal regulator to be ready after the voltage scaling has been changed. VOSF indicates that the regulator reached the voltage level defined with VOS bits of the PWR_CR1 register.

0: The regulator is ready in the selected voltage range

1: The regulator output voltage is changing to the required voltage level

Bit 9 **REGLPF**: Low-power regulator flag

This bit is set by hardware when the MCU is in Low-power run mode. When the MCU exits from the Low-power run mode, this bit remains at 1 until the regulator is ready in main mode. A polling on this bit must be done before increasing the product frequency.

This bit is cleared by hardware when the regulator is ready.

0: The regulator is ready in main mode (MR)

1: The regulator is in low-power mode (LPR)

Bit 8 **REGLPS**: Low-power regulator started

This bit provides the information whether the low-power regulator is ready after a power-on reset or a Standby/Shutdown. If the Standby mode is entered while REGLPS bit is still cleared, the wakeup from Standby mode time may be increased.

0: The low-power regulator is not ready

1: The low-power regulator is ready

Bits 7:0 Reserved, must be kept at reset value.

5.4.7 Power status clear register (PWR_SCR)

Address offset: 0x18

Reset value: 0x0000 0000.

Access: 3 additional APB cycles are needed to write this register vs. a standard APB write.

31	30	29	28	27	26	25	24	23	22	21	20	19	18	17	16
Res.	Res.	Res.	Res.	Res.	Res.	Res.	Res.	Res.	Res.	Res.	Res.	Res.	Res.	Res.	Res.
15	**14**	**13**	**12**	**11**	**10**	**9**	**8**	**7**	**6**	**5**	**4**	**3**	**2**	**1**	**0**
Res.	Res.	Res.	Res.	Res.	Res.	Res.	CSBF	Res.	Res.	Res.	CWUF 5	CWUF 4	CWUF 3	CWUF 2	CWUF 1
							w				w	w	w	w	w

Bits 31:9 Reserved, must be kept at reset value.

Bit 8 **CSBF**: Clear standby flag
Setting this bit clears the SBF flag in the PWR_SR1 register.

Bits 7:5 Reserved, must be kept at reset value.

Bit 4 **CWUF5**: Clear wakeup flag 5
Setting this bit clears the WUF5 flag in the PWR_SR1 register.

Bit 3 **CWUF4**: Clear wakeup flag 4
Setting this bit clears the WUF4 flag in the PWR_SR1 register.

Bit 2 **CWUF3**: Clear wakeup flag 3
Setting this bit clears the WUF3 flag in the PWR_SR1 register.

Bit 1 **CWUF2**: Clear wakeup flag 2
Setting this bit clears the WUF2 flag in the PWR_SR1 register.

Bit 0 **CWUF1**: Clear wakeup flag 1
Setting this bit clears the WUF1 flag in the PWR_SR1 register.

5.4.8 Power Port A pull-up control register (PWR_PUCRA)

Address offset: 0x20.

Reset value: 0x0000 0000. This register is not reset when exiting Standby modes and with PWRRST bit in the RCC_APB1RSTR1 register.

Access: Additional APB cycles are needed to access this register vs. a standard APB access (3 for a write and 2 for a read).

31	30	29	28	27	26	25	24	23	22	21	20	19	18	17	16
Res.	Res.	Res.	Res.	Res.	Res.	Res.	Res.	Res.	Res.	Res.	Res.	Res.	Res.	Res.	Res.
15	**14**	**13**	**12**	**11**	**10**	**9**	**8**	**7**	**6**	**5**	**4**	**3**	**2**	**1**	**0**
PU15	Res.	PU13	PU12	PU11	PU10	PU9	PU8	PU7	PU6	PU5	PU4	PU3	PU2	PU1	PU0
rw		rw	rw	rw	rw	rw	rw	rw	rw	rw	rw	rw	rw	rw	rw

Bits 31:16 Reserved, must be kept at reset value.

Bit 15 **PU15**: Port A pull-up bit 15

When set, this bit activates the pull-up on PA[15] when APC bit is set in PWR_CR3 register.

If the corresponding PD15 bit is also set, the pull-up is not activated and the pull-down is activated instead with highest priority.

Bit 14 Reserved, must be kept at reset value.

Bits 13:0 **PUy**: Port A pull-up bit y (y=0..13)

When set, this bit activates the pull-up on PA[y] when APC bit is set in PWR_CR3 register. If the corresponding PDy bit is also set, the pull-up is not activated and the pull-down is activated instead with highest priority.

5.4.9 Power Port A pull-down control register (PWR_PDCRA)

Address offset: 0x24.

Reset value: 0x0000 0000. This register is not reset when exiting Standby modes and with PWRRST bit in the RCC_APB1RSTR1 register.

Access: Additional APB cycles are needed to access this register vs. a standard APB access (3 for a write and 2 for a read).

31	30	29	28	27	26	25	24	23	22	21	20	19	18	17	16
Res.	Res.	Res.	Res.	Res.	Res.	Res.	Res.	Res.	Res.	Res.	Res.	Res.	Res.	Res.	Res.
15	14	13	12	11	10	9	8	7	6	5	4	3	2	1	0
Res.	PD14	Res.	PD12	PD11	PD10	PD9	PD8	PD7	PD6	PD5	PD4	PD3	PD2	PD1	PD0
	rw		rw	rw	rw	rw	rw	rw	rw	rw	rw	rw	rw	rw	rw

Bits 31:15 Reserved, must be kept at reset value.

Bit 14 **PD14**: Port A pull-down bit 14

When set, this bit activates the pull-down on PA[14] when APC bit is set in PWR_CR3 register.

Bit 13 Reserved, must be kept at reset value.

Bits 12:0 **PDy**: Port A pull-down bit y (y=0..12)

When set, this bit activates the pull-down on PA[y] when APC bit is set in PWR_CR3 register.

5.4.10 Power Port B pull-up control register (PWR_PUCRB)

Address offset: 0x28.

Reset value: 0x0000 0000. This register is not reset when exiting Standby modes and with PWRRST bit in the RCC_APB1RSTR1 register.

Access: Additional APB cycles are needed to access this register vs. a standard APB access (3 for a write and 2 for a read).

31	30	29	28	27	26	25	24	23	22	21	20	19	18	17	16
Res.	Res.	Res.	Res.	Res.	Res.	Res.	Res.	Res.	Res.	Res.	Res.	Res.	Res.	Res.	Res.
15	14	13	12	11	10	9	8	7	6	5	4	3	2	1	0
PU15	PU14	PU13	PU12	PU11	PU10	PU9	PU8	PU7	PU6	PU5	PU4	PU3	PU2	PU1	PU0
rw	rw	rw	rw	rw	rw	rw	rw	rw	rw	rw	rw	rw	rw	rw	rw

Bits 31:16 Reserved, must be kept at reset value.

Bits 15:0 **PUy**: Port B pull-up bit y (y=0..15)

When set, this bit activates the pull-up on PB[y] when APC bit is set in PWR_CR3 register. If the corresponding PDy bit is also set, the pull-up is not activated and the pull-down is activated instead with highest priority.

5.4.11 Power Port B pull-down control register (PWR_PDCRB)

Address offset: 0x2C.

Reset value: 0x0000 0000. This register is not reset when exiting Standby modes and with PWRRST bit in the RCC_APB1RSTR1 register.

Access: Additional APB cycles are needed to access this register vs. a standard APB access (3 for a write and 2 for a read).

31	30	29	28	27	26	25	24	23	22	21	20	19	18	17	16
Res.	Res.	Res.	Res.	Res.	Res.	Res.	Res.	Res.	Res.	Res.	Res.	Res.	Res.	Res.	Res.
15	14	13	12	11	10	9	8	7	6	5	4	3	2	1	0
PD15	PD14	PD13	PD12	PD11	PD10	PD9	PD8	PD7	PD6	PD5	Res.	PD3	PD2	PD1	PD0
rw	rw	rw	rw	rw	rw	rw	rw	rw	rw	rw		rw	rw	rw	rw

Bits 31:16 Reserved, must be kept at reset value.

Bits 15:5 **PDy**: Port B pull-down bit y (y=5..15)

When set, this bit activates the pull-down on PB[y] when APC bit is set in PWR_CR3 register.

Bit 4 Reserved, must be kept at reset value.

Bits 3:0 **PDy**: Port B pull-down bit y (y=0..3)

When set, this bit activates the pull-down on PB[y] when APC bit is set in PWR_CR3 register.

5.4.12 Power Port C pull-up control register (PWR_PUCRC)

Address offset: 0x30.

Reset value: 0x0000 0000. This register is not reset when exiting Standby modes and with PWRRST bit in the RCC_APB1RSTR1 register.

Access: Additional APB cycles are needed to access this register vs. a standard APB access (3 for a write and 2 for a read).

31	30	29	28	27	26	25	24	23	22	21	20	19	18	17	16
Res.	Res.	Res.	Res.	Res.	Res.	Res.	Res.	Res.	Res.	Res.	Res.	Res.	Res.	Res.	Res.
15	14	13	12	11	10	9	8	7	6	5	4	3	2	1	0
PU15	PU14	PU13	PU12	PU11	PU10	PU9	PU8	PU7	PU6	PU5	PU4	PU3	PU2	PU1	PU0
rw	rw	rw	rw	rw	rw	rw	rw	rw	rw	rw	rw	rw	rw	rw	rw

Bits 31:16 Reserved, must be kept at reset value.

Bits 15:0 **PUy**: Port C pull-up bit y (y=0..15)

When set, this bit activates the pull-up on PC[y] when APC bit is set in PWR_CR3 register. If the corresponding PDy bit is also set, the pull-up is not activated and the pull-down is activated instead with highest priority.

5.4.13 Power Port C pull-down control register (PWR_PDCRC)

Address offset: 0x34.

Reset value: 0x0000 0000. This register is not reset when exiting Standby modes and with PWRRST bit in the RCC_APB1RSTR1 register.

Access: Additional APB cycles are needed to access this register vs. a standard APB access (3 for a write and 2 for a read).

31	30	29	28	27	26	25	24	23	22	21	20	19	18	17	16
Res.	Res.	Res.	Res.	Res.	Res.	Res.	Res.	Res.	Res.	Res.	Res.	Res.	Res.	Res.	Res.
15	14	13	12	11	10	9	8	7	6	5	4	3	2	1	0
PD15	PD14	PD13	PD12	PD11	PD10	PD9	PD8	PD7	PD6	PD5	PD4	PD3	PD2	PD1	PD0
rw	rw	rw	rw	rw	rw	rw	rw	rw	rw	rw	rw	rw	rw	rw	rw

Bits 31:16 Reserved, must be kept at reset value.

Bits 15:0 **PDy**: Port C pull-down bit y (y=0..15)

When set, this bit activates the pull-down on PC[y] when APC bit is set in PWR_CR3 register.

5.4.14 Power Port D pull-up control register (PWR_PUCRD)

Address offset: 0x38.

Reset value: 0x0000 0000. This register is not reset when exiting Standby modes and with PWRRST bit in the RCC_APB1RSTR1 register.

Access: Additional APB cycles are needed to access this register vs. a standard APB access (3 for a write and 2 for a read).

31	30	29	28	27	26	25	24	23	22	21	20	19	18	17	16
Res.	Res.	Res.	Res.	Res.	Res.	Res.	Res.	Res.	Res.	Res.	Res.	Res.	Res.	Res.	Res.
15	14	13	12	11	10	9	8	7	6	5	4	3	2	1	0
PU15	PU14	PU13	PU12	PU11	PU10	PU9	PU8	PU7	PU6	PU5	PU4	PU3	PU2	PU1	PU0
rw	rw	rw	rw	rw	rw	rw	rw	rw	rw	rw	rw	rw	rw	rw	rw

Bits 31:16 Reserved, must be kept at reset value.

Bits 15:0 **PUy**: Port D pull-up bit y (y=0..15)

When set, this bit activates the pull-up on PD[y] when APC bit is set in PWR_CR3 register. If the corresponding PDy bit is also set, the pull-up is not activated and the pull-down is activated instead with highest priority.

5.4.15 Power Port D pull-down control register (PWR_PDCRD)

Address offset: 0x3C.

Reset value: 0x0000 0000. This register is not reset when exiting Standby modes and with PWRRST bit in the RCC_APB1RSTR1 register.

Access: Additional APB cycles are needed to access this register vs. a standard APB access (3 for a write and 2 for a read).

31	30	29	28	27	26	25	24	23	22	21	20	19	18	17	16
Res.	Res.	Res.	Res.	Res.	Res.	Res.	Res.	Res.	Res.	Res.	Res.	Res.	Res.	Res.	Res.
15	14	13	12	11	10	9	8	7	6	5	4	3	2	1	0
PD15	PD14	PD13	PD12	PD11	PD10	PD9	PD8	PD7	PD6	PD5	PD4	PD3	PD2	PD1	PD0
rw	rw	rw	rw	rw	rw	rw	rw	rw	rw	rw	rw	rw	rw	rw	rw

Bits 31:16 Reserved, must be kept at reset value.

Bits 15:0 **PDy**: Port D pull-down bit y (y=0..15)

When set, this bit activates the pull-down on PD[y] when APC bit is set in PWR_CR3 register.

5.4.16 Power Port E pull-up control register (PWR_PUCRE)

Address offset: 0x20.

Reset value: 0x0000 0000. This register is not reset when exiting Standby modes and with PWRRST bit in the RCC_APB1RSTR1 register.

Access: Additional APB cycles are needed to access this register vs. a standard APB access (3 for a write and 2 for a read).

31	30	29	28	27	26	25	24	23	22	21	20	19	18	17	16
Res.	Res.	Res.	Res.	Res.	Res.	Res.	Res.	Res.	Res.	Res.	Res.	Res.	Res.	Res.	Res.
15	14	13	12	11	10	9	8	7	6	5	4	3	2	1	0
PU15	PU14	PU13	PU12	PU11	PU10	PU9	PU8	PU7	PU6	PU5	PU4	PU3	PU2	PU1	PU0
rw	rw	rw	rw	rw	rw	rw	rw	rw	rw	rw	rw	rw	rw	rw	rw

Bits 31:16 Reserved, must be kept at reset value.

Bits 15:0 **PUy**: Port E pull-up bit y (y=0..15)

When set, this bit activates the pull-up on PE[y] when APC bit is set in PWR_CR3 register. If the corresponding PDy bit is also set, the pull-up is not activated and the pull-down is activated instead with highest priority.

5.4.17 Power Port E pull-down control register (PWR_PDCRE)

Address offset: 0x44.

Reset value: 0x0000 0000. This register is not reset when exiting Standby modes and with PWRRST bit in the RCC_APB1RSTR1 register.

Access: Additional APB cycles are needed to access this register vs. a standard APB access (3 for a write and 2 for a read).

31	30	29	28	27	26	25	24	23	22	21	20	19	18	17	16
Res.	Res.	Res.	Res.	Res.	Res.	Res.	Res.	Res.	Res.	Res.	Res.	Res.	Res.	Res.	Res.
15	14	13	12	11	10	9	8	7	6	5	4	3	2	1	0
PD15	PD14	PD13	PD12	PD11	PD10	PD9	PD8	PD7	PD6	PD5	PD4	PD3	PD2	PD1	PD0
rw	rw	rw	rw	rw	rw	rw	rw	rw	rw	rw	rw	rw	rw	rw	rw

Bits 31:16 Reserved, must be kept at reset value.

Bits 15:0 **PDy**: Port E pull-down bit y (y=0..15)

When set, this bit activates the pull-down on PE[y] when APC bit is set in PWR_CR3 register.

5.4.18 Power Port F pull-up control register (PWR_PUCRF)

Address offset: 0x48.

Reset value: 0x0000 0000. This register is not reset when exiting Standby modes and with PWRRST bit in the RCC_APB1RSTR1 register.

Access: Additional APB cycles are needed to access this register vs. a standard APB access (3 for a write and 2 for a read).

31	30	29	28	27	26	25	24	23	22	21	20	19	18	17	16
Res.	Res.	Res.	Res.	Res.	Res.	Res.	Res.	Res.	Res.	Res.	Res.	Res.	Res.	Res.	Res.
15	14	13	12	11	10	9	8	7	6	5	4	3	2	1	0
PU15	PU14	PU13	PU12	PU11	PU10	PU9	PU8	PU7	PU6	PU5	PU4	PU3	PU2	PU1	PU0
rw	rw	rw	rw	rw	rw	rw	rw	rw	rw	rw	rw	rw	rw	rw	rw

Bits 31:16 Reserved, must be kept at reset value.

Bits 15:0 **PUy**: Port F pull-up bit y (y=0..15)

When set, this bit activates the pull-up on PF[y] when APC bit is set in PWR_CR3 register. If the corresponding PDy bit is also set, the pull-up is not activated and the pull-down is activated instead with highest priority.

5.4.19 Power Port F pull-down control register (PWR_PDCRF)

Address offset: 0x4C.

Reset value: 0x0000 0000. This register is not reset when exiting Standby modes and with PWRRST bit in the RCC_APB1RSTR1 register.

Access: Additional APB cycles are needed to access this register vs. a standard APB access (3 for a write and 2 for a read).

31	30	29	28	27	26	25	24	23	22	21	20	19	18	17	16
Res.	Res.	Res.	Res.	Res.	Res.	Res.	Res.	Res.	Res.	Res.	Res.	Res.	Res.	Res.	Res.
15	14	13	12	11	10	9	8	7	6	5	4	3	2	1	0
PD15	PD14	PD13	PD12	PD11	PD10	PD9	PD8	PD7	PD6	PD5	PD4	PD3	PD2	PD1	PD0
rw	rw	rw	rw	rw	rw	rw	rw	rw	rw	rw	rw	rw	rw	rw	rw

Bits 31:16 Reserved, must be kept at reset value.

Bits 15:0 **PDy**: Port F pull-down bit y (y=0..15)

When set, this bit activates the pull-down on PF[y] when APC bit is set in PWR_CR3 register.

5.4.20 Power Port G pull-up control register (PWR_PUCRG)

Address offset: 0x50.

Reset value: 0x0000 0000. This register is not reset when exiting Standby modes and with PWRRST bit in the RCC_APB1RSTR1 register.

Access: Additional APB cycles are needed to access this register vs. a standard APB access (3 for a write and 2 for a read).

31	30	29	28	27	26	25	24	23	22	21	20	19	18	17	16
Res.	Res.	Res.	Res.	Res.	Res.	Res.	Res.	Res.	Res.	Res.	Res.	Res.	Res.	Res.	Res.
15	14	13	12	11	10	9	8	7	6	5	4	3	2	1	0
PU15	PU14	PU13	PU12	PU11	PU10	PU9	PU8	PU7	PU6	PU5	PU4	PU3	PU2	PU1	PU0
rw	rw	rw	rw	rw	rw	rw	rw	rw	rw	rw	rw	rw	rw	rw	rw

Bits 31:16 Reserved, must be kept at reset value.

Bits 15:0 **PUy**: Port G pull-up bit y (y=0..15)

When set, this bit activates the pull-up on PG[y] when APC bit is set in PWR_CR3 register. If the corresponding PDy bit is also set, the pull-up is not activated and the pull-down is activated instead with highest priority.

5.4.21 Power Port G pull-down control register (PWR_PDCRG)

Address offset: 0x54.

Reset value: 0x0000 0000. This register is not reset when exiting Standby modes and with PWRRST bit in the RCC_APB1RSTR1 register.

Access: Additional APB cycles are needed to access this register vs. a standard APB access (3 for a write and 2 for a read).

31	30	29	28	27	26	25	24	23	22	21	20	19	18	17	16
Res.	Res.	Res.	Res.	Res.	Res.	Res.	Res.	Res.	Res.	Res.	Res.	Res.	Res.	Res.	Res.
15	14	13	12	11	10	9	8	7	6	5	4	3	2	1	0
PD15	PD14	PD13	PD12	PD11	PD10	PD9	PD8	PD7	PD6	PD5	PD4	PD3	PD2	PD1	PD0
rw	rw	rw	rw	rw	rw	rw	rw	rw	rw	rw	rw	rw	rw	rw	rw

Bits 31:16 Reserved, must be kept at reset value.

Bits 15:0 **PDy**: Port G pull-down bit y (y=0..15)

When set, this bit activates the pull-down on PG[y] when APC bit is set in PWR_CR3 register.

5.4.22 Power Port H pull-up control register (PWR_PUCRH)

Address offset: 0x58.

Reset value: 0x0000 0000. This register is not reset when exiting Standby modes and with PWRRST bit in the RCC_APB1RSTR1 register.

Access: Additional APB cycles are needed to access this register vs. a standard APB access (3 for a write and 2 for a read).

31	30	29	28	27	26	25	24	23	22	21	20	19	18	17	16
Res.	Res.	Res.	Res.	Res.	Res.	Res.	Res.	Res.	Res.	Res.	Res.	Res.	Res.	Res.	Res.
15	14	13	12	11	10	9	8	7	6	5	4	3	2	1	0
PU15	PU14	PU13	PU12	PU11	PU10	PU9	PU8	PU7	PU6	PU5	PU4	PU3	PU2	PU1	PU0
rw	rw	rw	rw	rw	rw	rw	rw	rw	rw	rw	rw	rw	rw	rw	rw

Bits 31:16 Reserved, must be kept at reset value.

Bits 15:0 **PUy**: Port H pull-up bit y (y=0..15)

When set, this bit activates the pull-up on PH[y] when APC bit is set in PWR_CR3 register. If the corresponding PDy bit is also set, the pull-up is not activated and the pull-down is activated instead with highest priority (PWR_PUCRH[15:2][15:2] are reserved on STM32L47x/L48x devices).

5.4.23 Power Port H pull-down control register (PWR_PDCRH)

Address offset: 0x5C.

Reset value: 0x0000 0000. This register is not reset when exiting Standby modes and with PWRRST bit in the RCC_APB1RSTR1 register.

Access: Additional APB cycles are needed to access this register vs. a standard APB access (3 for a write and 2 for a read).

31	30	29	28	27	26	25	24	23	22	21	20	19	18	17	16
Res.	Res.	Res.	Res.	Res.	Res.	Res.	Res.	Res.	Res.	Res.	Res.	Res.	Res.	Res.	Res.
15	14	13	12	11	10	9	8	7	6	5	4	3	2	1	0
PD15	PD14	PD13	PD12	PD11	PD10	PD9	PD8	PD7	PD6	PD5	PD4	PD3	PD2	PD1	PD0
rw	rw	rw	rw	rw	rw	rw	rw	rw	rw	rw	rw	rw	rw	rw	rw

Bits 31:16 Reserved, must be kept at reset value.

Bits 15:0 **PDy**: Port H pull-down bit y (y=0..15)

When set, this bit activates the pull-down on PH[y] when APC bit is set in PWR_CR3 register (PWR_PDCRH[15:2] are reserved on STM32L47x/L48x devices).

5.4.24 Power Port I pull-up control register (PWR_PUCRI)

This register applies only to STM32L49x/L4Ax.

Address offset: 0x60.

Reset value: 0x0000 0000. This register is not reset when exiting Standby modes and with PWRRST bit in the RCC_APB1RSTR1 register.

Access: Additional APB cycles are needed to access this register vs. a standard APB access (3 for a write and 2 for a read).

31	30	29	28	27	26	25	24	23	22	21	20	19	18	17	16
Res.	Res.	Res.	Res.	Res.	Res.	Res.	Res.	Res.	Res.	Res.	Res.	Res.	Res.	Res.	Res.
15	14	13	12	11	10	9	8	7	6	5	4	3	2	1	0
Res.	Res.	Res.	Res.	PU11	PU10	PU9	PU8	PU7	PU6	PU5	PU4	PU3	PU2	PU1	PU0
				rw	rw	rw	rw	rw	rw	rw	rw	rw	rw	rw	rw

Bits 31:16 Reserved, must be kept at reset value.

Bits 11:0 **PUy**: Port I pull-up bit y (y=0..11)

When set, this bit activates the pull-up on PI[y] when APC bit is set in PWR_CR3 register. If the corresponding PDy bit is also set, the pull-up is not activated and the pull-down is activated instead with highest priority.

5.4.25 Power Port I pull-down control register (PWR_PDCRI)

This register applies only to STM32L49x/L4Ax.

Address offset: 0x64.

Reset value: 0x0000 0000. This register is not reset when exiting Standby modes and with PWRRST bit in the RCC_APB1RSTR1 register.

Access: Additional APB cycles are needed to access this register vs. a standard APB access (3 for a write and 2 for a read).

31	30	29	28	27	26	25	24	23	22	21	20	19	18	17	16
Res.	Res.	Res.	Res.	Res.	Res.	Res.	Res.	Res.	Res.	Res.	Res.	Res.	Res.	Res.	Res.
15	14	13	12	11	10	9	8	7	6	5	4	3	2	1	0
Res.	Res.	Res.	Res.	PD11	PD10	PD9	PD8	PD7	PD6	PD5	PD4	PD3	PD2	PD1	PD0
				rw	rw	rw	rw	rw	rw	rw	rw	rw	rw	rw	rw

Bits 31:16 Reserved, must be kept at reset value.

Bits 11:0 **PDy**: Port I pull-down bit y (y=0..11)

When set, this bit activates the pull-down on PI[y] when APC bit is set in PWR_CR3 register.

5.4.26 PWR register map and reset value table

Table 32. PWR register map and reset values

Offset	Register	31	30	29	28	27	26	25	24	23	22	21	20	19	18	17	16	15	14	13	12	11	10	9	8	7	6	5	4	3	2	1	0
0x000	PWR_CR1	Res.	Res.	Res.	Res.	Res.	Res.	Res.	Res.	Res.	Res.	Res.	Res.	Res.	Res.	Res.	Res.	Res.	LPR	Res.	Res.	Res.	VOS [1:0]		DBP	Res.	Res.	Res.	Res.	Res.	LPMS [2:0]		
	Reset value																		0				0	1	0						0	0	0
0x004	PWR_CR2	Res.	Res.	Res.	Res.	Res.	Res.	Res.	Res.	Res.	Res.	Res.	Res.	Res.	Res.	Res.	Res.	Res.	Res.	Res.	Res.	Res.	USV	IOSV	Res.	PVME4	PVME3	PVME2	PVME1	PLS [2:0]			PVDE
	Reset value																						0	0		0	0	0	0	0	0	0	0
0x008	PWR_CR3	Res.	Res.	Res.	Res.	Res.	Res.	Res.	Res.	Res.	Res.	Res.	Res.	Res.	Res.	Res.	Res.	EIWUL	Res.	Res.	Res.	Res.	APC	Res.	RRS	Res.	Res.	Res.	EWUP5	EWUP4	EWUP3	EWUP2	EWUP1
	Reset value																	1					0		0				0	0	0	0	0
0x00C	PWR_CR4	Res.	Res.	Res.	Res.	Res.	Res.	Res.	Res.	Res.	Res.	Res.	Res.	Res.	Res.	Res.	Res.	Res.	Res.	Res.	Res.	Res.	Res.	VBRS	VBE	Res.	Res.	Res.	WP5	WP4	WP3	WP2	WP1
	Reset value																							0	0				0	0	0	0	0
0x010	PWR_SR1	Res.	Res.	Res.	Res.	Res.	Res.	Res.	Res.	Res.	Res.	Res.	Res.	Res.	Res.	Res.	Res.	WUFI	Res.	Res.	Res.	Res.	Res.	Res.	SBF	Res.	Res.	Res.	WUF5	WUF4	WUF3	WUF2	WUF1
	Reset value																	0							0				0	0	0	0	0
0x014	PWR_SR2	Res.	Res.	Res.	Res.	Res.	Res.	Res.	Res.	Res.	Res.	Res.	Res.	Res.	Res.	Res.	Res.	PVMO4	PVMO3	PVMO2	PVMO1	PVDO	VOSF	REGLPF	REGLPS	Res.	Res.	Res.	Res.	Res.	Res.	Res.	Res.
	Reset value																	0	0	0	0	0	0	0	0								
0x018	PWR_SCR	Res.	Res.	Res.	Res.	Res.	Res.	Res.	Res.	Res.	Res.	Res.	Res.	Res.	Res.	Res.	Res.	Res.	Res.	Res.	Res.	Res.	Res.	Res.	CSBF	Res.	Res.	Res.	CWUF5	CWUF4	CWUF3	CWUF2	CWUF1
	Reset value																								0				0	0	0	0	0
0x020	PWR_PUCRA	Res.	Res.	Res.	Res.	Res.	Res.	Res.	Res.	Res.	Res.	Res.	Res.	Res.	Res.	Res.	Res.	PU15	Res.	PU13	PU12	PU11	PU10	PU9	PU8	PU7	PU6	PU5	PU4	PU3	PU2	PU1	PU0
	Reset value																	0		0	0	0	0	0	0	0	0	0	0	0	0	0	0
0x024	PWR_PDCRA	Res.	Res.	Res.	Res.	Res.	Res.	Res.	Res.	Res.	Res.	Res.	Res.	Res.	Res.	Res.	Res.	Res.	PD14	Res.	PD12	PD11	PD10	PD9	PD8	PD7	PD6	PD5	PD4	PD3	PD2	PD1	PD0
	Reset value																		0		0	0	0	0	0	0	0	0	0	0	0	0	0
0x028	PWR_PUCRB	Res.	Res.	Res.	Res.	Res.	Res.	Res.	Res.	Res.	Res.	Res.	Res.	Res.	Res.	Res.	Res.	PU15	PU14	PU13	PU12	PU11	PU10	PU9	PU8	PU7	PU6	PU5	PU4	PU3	PU2	PU1	PU0
	Reset value																	0	0	0	0	0	0	0	0	0	0	0	0	0	0	0	0
0x02C	PWR_PDCRB	Res.	Res.	Res.	Res.	Res.	Res.	Res.	Res.	Res.	Res.	Res.	Res.	Res.	Res.	Res.	Res.	PD15	PD14	PD13	PD12	PD11	PD10	PD9	PD8	PD7	PD6	PD5	Res.	PD3	PD2	PD1	PD0
	Reset value																	0	0	0	0	0	0	0	0	0	0	0		0	0	0	0
0x030	PWR_PUCRC	Res.	Res.	Res.	Res.	Res.	Res.	Res.	Res.	Res.	Res.	Res.	Res.	Res.	Res.	Res.	Res.	PU15	PU14	PU13	PU12	PU11	PU10	PU9	PU8	PU7	PU6	PU5	PU4	PU3	PU2	PU1	PU0
	Reset value																	0	0	0	0	0	0	0	0	0	0	0	0	0	0	0	0
0x034	PWR_PDCRC	Res.	Res.	Res.	Res.	Res.	Res.	Res.	Res.	Res.	Res.	Res.	Res.	Res.	Res.	Res.	Res.	PD15	PD14	PD13	PD12	PD11	PD10	PD9	PD8	PD7	PD6	PD5	PD4	PD3	PD2	PD1	PD0
	Reset value																	0	0	0	0	0	0	0	0	0	0	0	0	0	0	0	0
0x038	PWR_PUCRD	Res.	Res.	Res.	Res.	Res.	Res.	Res.	Res.	Res.	Res.	Res.	Res.	Res.	Res.	Res.	Res.	PU15	PU14	PU13	PU12	PU11	PU10	PU9	PU8	PU7	PU6	PU5	PU4	PU3	PU2	PU1	PU0
	Reset value																	0	0	0	0	0	0	0	0	0	0	0	0	0	0	0	0
0x03C	PWR_PDCRD	Res.	Res.	Res.	Res.	Res.	Res.	Res.	Res.	Res.	Res.	Res.	Res.	Res.	Res.	Res.	Res.	PD15	PD14	PD13	PD12	PD11	PD10	PD9	PD8	PD7	PD6	PD5	PD4	PD3	PD2	PD1	PD0
	Reset value																	0	0	0	0	0	0	0	0	0	0	0	0	0	0	0	0
0x040	PWR_PUCRE	Res.	Res.	Res.	Res.	Res.	Res.	Res.	Res.	Res.	Res.	Res.	Res.	Res.	Res.	Res.	Res.	PU15	PU14	PU13	PU12	PU11	PU10	PU9	PU8	PU7	PU6	PU5	PU4	PU3	PU2	PU1	PU0
	Reset value																	0	0	0	0	0	0	0	0	0	0	0	0	0	0	0	0

Table 32. PWR register map and reset values (continued)

Offset	Register	31	30	29	28	27	26	25	24	23	22	21	20	19	18	17	16	15	14	13	12	11	10	9	8	7	6	5	4	3	2	1	0
0x044	PWR_PDCRE	Res.	Res.	Res.	Res.	Res.	Res.	Res.	Res.	Res.	Res.	Res.	Res.	Res.	Res.	Res.	Res.	PD15	PD14	PD13	PD12	PD11	PD10	PD9	PD8	PD7	PD6	PD5	PD4	PD3	PD2	PD1	PD0
	Reset value																	0	0	0	0	0	0	0	0	0	0	0	0	0	0	0	0
0x048	PWR_PUCRF	Res.	Res.	Res.	Res.	Res.	Res.	Res.	Res.	Res.	Res.	Res.	Res.	Res.	Res.	Res.	Res.	PU15	PU14	PU13	PU12	PU11	PU10	PU9	PU8	PU7	PU6	PU5	PU4	PU3	PU2	PU1	PU0
	Reset value																	0	0	0	0	0	0	0	0	0	0	0	0	0	0	0	0
0x04C	PWR_PDCRF	Res.	Res.	Res.	Res.	Res.	Res.	Res.	Res.	Res.	Res.	Res.	Res.	Res.	Res.	Res.	Res.	PD15	PD14	PD13	PD12	PD11	PD10	PD9	PD8	PD7	PD6	PD5	PD4	PD3	PD2	PD1	PD0
	Reset value																	0	0	0	0	0	0	0	0	0	0	0	0	0	0	0	0
0x050	PWR_PUCRG	Res.	Res.	Res.	Res.	Res.	Res.	Res.	Res.	Res.	Res.	Res.	Res.	Res.	Res.	Res.	Res.	PU15	PU14	PU13	PU12	PU11	PU10	PU9	PU8	PU7	PU6	PU5	PU4	PU3	PU2	PU1	PU0
	Reset value																	0	0	0	0	0	0	0	0	0	0	0	0	0	0	0	0
0x054	PWR_PDCRG	Res.	Res.	Res.	Res.	Res.	Res.	Res.	Res.	Res.	Res.	Res.	Res.	Res.	Res.	Res.	Res.	PD15	PD14	PD13	PD12	PD11	PD10	PD9	PD8	PD7	PD6	PD5	PD4	PD3	PD2	PD1	PD0
	Reset value																	0	0	0	0	0	0	0	0	0	0	0	0	0	0	0	0
0x058	PWR_PUCRH	Res.	Res.	Res.	Res.	Res.	Res.	Res.	Res.	Res.	Res.	Res.	Res.	Res.	Res.	Res.	Res.	PU15	PU14	PU13	PU12	PU11	PU10	PU9	PU8	PU7	PU6	PU5	PU4	PU3	PU2	PU1	PU0
	Reset value																	0	0	0	0	0	0	0	0	0	0	0	0	0	0	0	0
0x05C	PWR_PDCRH	Res.	Res.	Res.	Res.	Res.	Res.	Res.	Res.	Res.	Res.	Res.	Res.	Res.	Res.	Res.	Res.	PD15	PD14	PD13	PD12	PD11	PD10	PD9	PD8	PD7	PD6	PD5	PD4	PD3	PD2	PD1	PD0
	Reset value																	0	0	0	0	0	0	0	0	0	0	0	0	0	0	0	0
0x060	PWR_PUCRI	Res.	Res.	Res.	Res.	Res.	Res.	Res.	Res.	Res.	Res.	Res.	Res.	Res.	Res.	Res.	Res.	Res.	Res.	Res.	Res.	PU11	PU10	PU9	PU8	PU7	PU6	PU5	PU4	PU3	PU2	PU1	PU0
	Reset value																					0	0	0	0	0	0	0	0	0	0	0	0
0x064	PWR_PDCRI	Res.	Res.	Res.	Res.	Res.	Res.	Res.	Res.	Res.	Res.	Res.	Res.	Res.	Res.	Res.	Res.	Res.	Res.	Res.	Res.	PD11	PD10	PD9	PD8	PD7	PD6	PD5	PD4	PD3	PD2	PD1	PD0
	Reset value																					0	0	0	0	0	0	0	0	0	0	0	0

Refer to *Section 2.2 on page 75* for the register boundary addresses.

6 Reset and clock control (RCC)

6.1 Reset

There are three types of reset, defined as system reset, power reset and backup domain reset.

6.1.1 Power reset

A power reset is generated when one of the following events occurs:

1. a Brown-out reset (BOR).
2. when exiting from Standby mode.
3. when exiting from Shutdown mode.

A Brown-out reset, including power-on or power-down reset (POR/PDR), sets all registers to their reset values except the Backup domain.

When exiting Standby mode, all registers in the V_{CORE} domain are set to their reset value. Registers outside the V_{CORE} domain (RTC, WKUP, IWDG, and Standby/Shutdown modes control) are not impacted.

When exiting Shutdown mode, a Brown-out reset is generated, resetting all registers except those in the Backup domain.

6.1.2 System reset

A system reset sets all registers to their reset values unless specified otherwise in the register description.

A system reset is generated when one of the following events occurs:

1. A low level on the NRST pin (external reset)
2. Window watchdog event (WWDG reset)
3. Independent watchdog event (IWDG reset)
4. A firewall event (FIREWALL reset)
5. A software reset (SW reset) (see *Software reset*)
6. Low-power mode security reset (see *Low-power mode security reset*)
7. Option byte loader reset (see *Option byte loader reset*)
8. A Brown-out reset

The reset source can be identified by checking the reset flags in the Control/Status register, RCC_CSR (see *Section 6.4.30: Control/status register (RCC_CSR)*).

These sources act on the NRST pin and it is always kept low during the delay phase. The RESET service routine vector is fixed at address 0x0000_0004 in the memory map.

The system reset signal provided to the device is output on the NRST pin. The pulse generator guarantees a minimum reset pulse duration of 20 µs for each internal reset source. In case of an external reset, the reset pulse is generated while the NRST pin is asserted low.

In case on an internal reset, the internal pull-up R_{PU} is deactivated in order to save the power consumption through the pull-up resistor.

Figure 14. Simplified diagram of the reset circuit

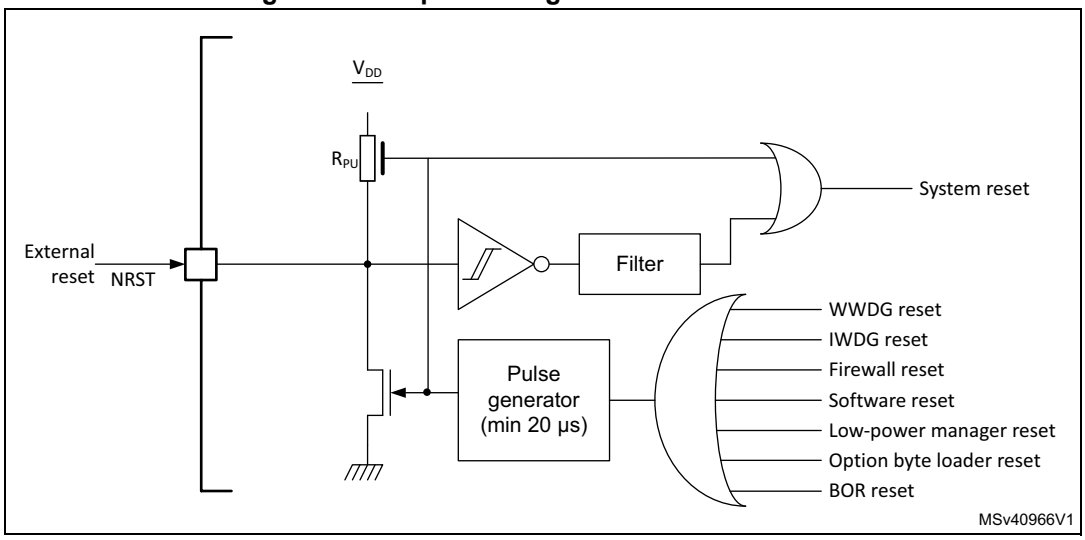

Software reset

The SYSRESETREQ bit in Cortex®-M4 Application Interrupt and Reset Control Register must be set to force a software reset on the device (refer to the STM32 Cortex®-M4 MCUs and MPUs programming manual (PM0214)).

Low-power mode security reset

To prevent that critical applications mistakenly enter a low-power mode, two low-power mode security resets are available. If enabled in option bytes, the resets are generated in the following conditions:

1. Entering Standby mode: this type of reset is enabled by resetting nRST_STDBY bit in User option Bytes. In this case, whenever a Standby mode entry sequence is successfully executed, the device is reset instead of entering Standby mode.
2. Entering Stop mode: this type of reset is enabled by resetting nRST_STOP bit in User option bytes. In this case, whenever a Stop mode entry sequence is successfully executed, the device is reset instead of entering Stop mode.
3. Entering Shutdown mode: this type of reset is enabled by resetting nRST_SHDW bit in User option bytes. In this case, whenever a Shutdown mode entry sequence is successfully executed, the device is reset instead of entering Shutdown mode.

For further information on the User Option Bytes, refer to *Section 3.4.1: Option bytes description*.

Option byte loader reset

The option byte loader reset is generated when the OBL_LAUNCH bit (bit 27) is set in the FLASH_CR register. This bit is used to launch the option byte loading by software.

6.1.3 Backup domain reset

The backup domain has two specific resets.

A backup domain reset is generated when one of the following events occurs:

1. Software reset, triggered by setting the BDRST bit in the *Backup domain control register (RCC_BDCR)*.
2. V_{DD} or V_{BAT} power on, if both supplies have previously been powered off.

A backup domain reset only affects the LSE oscillator, the RTC, the Backup registers and the RCC Backup domain control register.

6.2 Clocks

Four different clock sources can be used to drive the system clock (SYSCLK):

- HSI16 (high speed internal)16 MHz RC oscillator clock
- MSI (multispeed internal) RC oscillator clock
- HSE oscillator clock, from 4 to 48 MHz
- PLL clock

The MSI is used as system clock source after startup from Reset, configured at 4 MHz.

The devices have the following additional clock sources:

- 32 kHz low speed internal RC (LSI RC) which drives the independent watchdog and optionally the RTC used for Auto-wakeup from Stop and Standby modes.
- 32.768 kHz low speed external crystal (LSE crystal) which optionally drives the real-time clock (RTCCLK).
- RC 48 MHz internal clock sources (HSI48) to potentially drive the USB FS, the SDMMC and the RNG (only for STM32L49x/L4Ax devices).

Each clock source can be switched on or off independently when it is not used, to optimize power consumption.

Several prescalers can be used to configure the AHB frequency, the high speed APB (APB2) and the low speed APB (APB1) domains. The maximum frequency of the AHB, the APB1 and the APB2 domains is 80 MHz.

All the peripheral clocks are derived from their bus clock (HCLK, PCLK1 or PCLK2) except:

- The 48 MHz clock, used for USB OTG FS, SDMMC and RNG. This clock is derived (selected by software) from one of the four following sources:
  - main PLL VCO (PLL48M1CLK)
  - PLLSAI1 VCO (PLL48M2CLK)
  - MSI clock
  - HSI48 internal oscillator (only for STM32L49x/L4Ax devices)

  When the MSI clock is auto-trimmed with the LSE, it can be used by the USB OTG FS device.

  When available, the HSI48 48 MHz clock can be coupled to the clock recovery system allowing adequate clock connection for the USB OTG FS (Crystal less solution).
- The ADCs clock which is derived (selected by software) from one of the three following sources:
  - system clock (SYSCLK)
  - PLLSAI1 VCO (PLLADC1CLK)
  - PLLSAI2 VCO (PLLADC2CLK)
- The U(S)ARTs clocks which are derived (selected by software) from one of the four following sources:
  - system clock (SYSCLK)
  - HSI16 clock
  - LSE clock
  - APB1 or APB2 clock (PCLK1 or PCLK2 depending on which APB is mapped the U(S)ART)

  The wakeup from Stop mode is supported only when the clock is HSI16 or LSE.
- The I^2Cs clocks which are derived (selected by software) from one of the three following sources:
  - system clock (SYSCLK)
  - HSI16 clock
  - APB1 clock (PCLK1)

  The wakeup from Stop mode is supported only when the clock is HSI16.
- The SAI1 and SAI2 clocks which are derived (selected by software) from one of the five following sources:
  - an external clock mapped on SAI1_EXTCLK for SAI1 and SAI2_EXTCLK for SAI2
  - PLLSAI1 VCO (PLLSAI1CLK)
  - PLLSAI2 VCO (PLLSAI2CLK)
  - main PLL VCO (PLLSAI3CLK)
  - HSI16 clock (only for STM32L49x/L4Ax devices)
- The SWPMI1 clock which is derived (selected by software) from one of the two following sources:
  - HSI16 clock
  - APB1 clock (PCLK1)

  The wakeup from Stop mode is supported only when the clock is HSI16.
- The DFSDM1 clock which is derived (selected by software) from one of the two following sources:

  - system clock (SYSCLK)
  - APB2 clock (PCLK2)
- The low-power timers (LPTIMx) clock which are derived (selected by software) from one of the five following sources:
  - LSI clock
  - LSE clock
  - HSI16 clock
  - APB1 clock (PCLK1)
  - External clock mapped on LPTIMx_IN1

  The functionality in Stop mode (including wakeup) is supported only when the clock is LSI or LSE, or in external clock mode.
- The RTC and LCD clock which is derived (selected by software) from one of the three following sources:
  - LSE clock
  - LSI clock
  - HSE clock divided by 32

  The functionality in Stop mode (including wakeup) is supported only when the clock is LSI or LSE.
- The IWDG clock which is always the LSI clock.

The RCC feeds the Cortex® System Timer (SysTick) external clock with the AHB clock (HCLK) divided by 8. The SysTick can work either with this clock or directly with the Cortex® clock (HCLK), configurable in the SysTick Control and Status Register.

FCLK acts as Cortex®-M4 free-running clock. For more details refer to the STM32 Cortex®-M4 MCUs and MPUs programming manual (PM0214).

Figure 15. Clock tree (for STM32L47x/L48x devices)

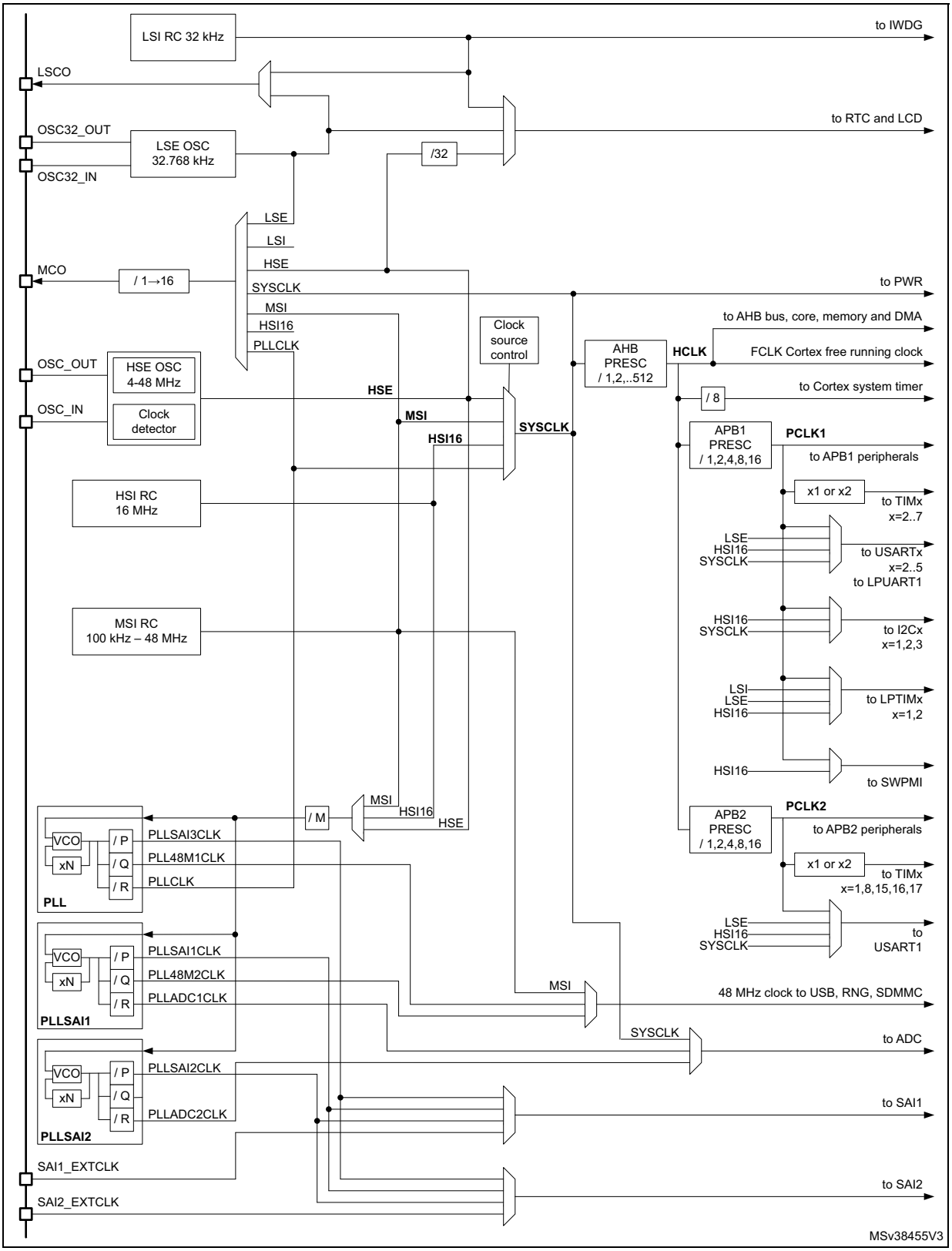

1. For full details about the internal and external clock source characteristics, please refer to the “Electrical characteristics” section in your device datasheet.
2. The ADC clock can be derived from the AHB clock of the ADC bus interface, divided by a programmable factor (1, 2 or 4). When the programmable factor is ‘1’, the AHB prescaler must be equal to ‘1’.

Figure 16. Clock tree (for STM32L49x/L4Ax devices)

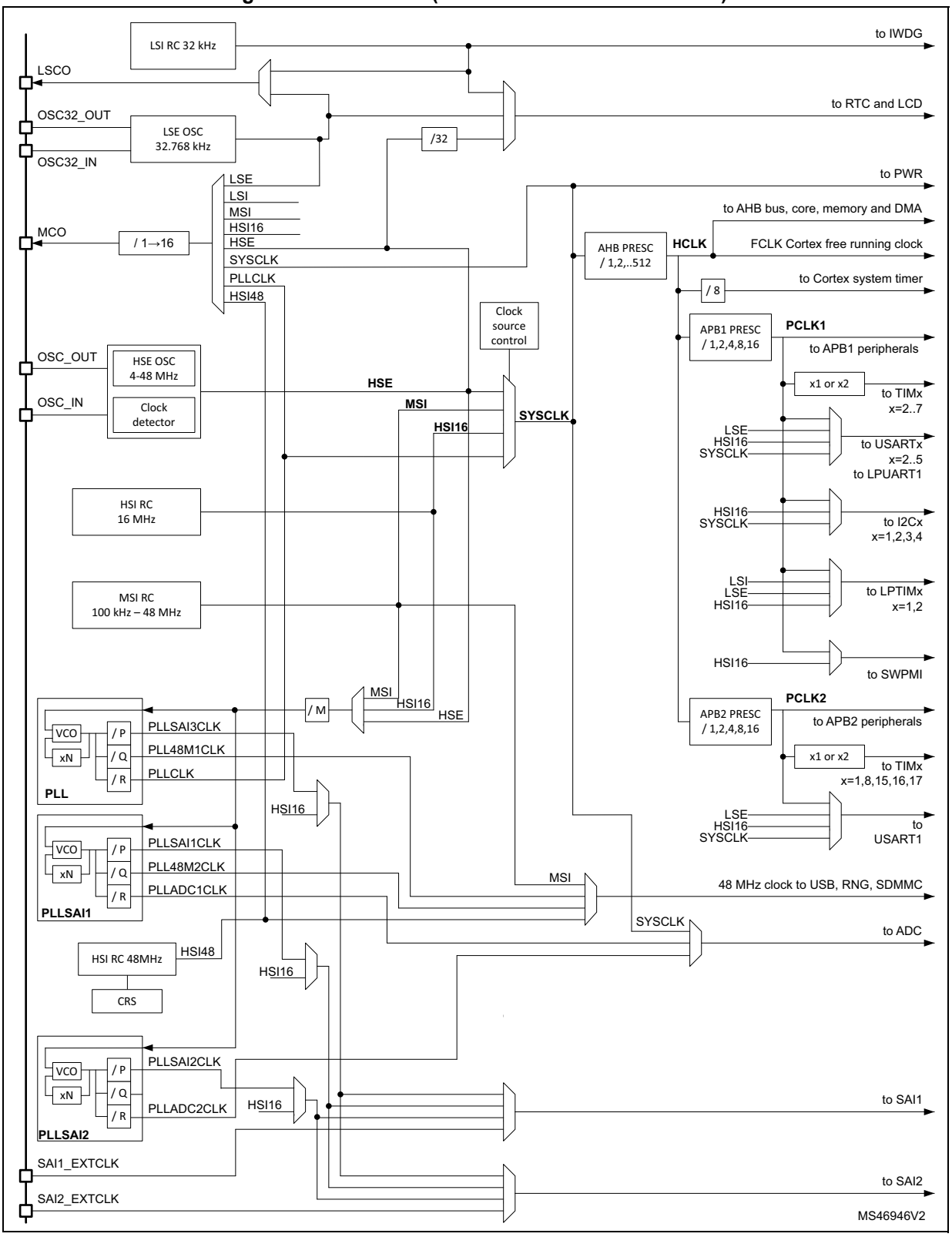

6.2.1 HSE clock

The high speed external clock signal (HSE) can be generated from two possible clock sources:

- HSE external crystal/ceramic resonator
- HSE user external clock

The resonator and the load capacitors have to be placed as close as possible to the oscillator pins in order to minimize output distortion and startup stabilization time. The loading capacitance values must be adjusted according to the selected oscillator.

Figure 17. HSE/ LSE clock sources

Clock source	Hardware configuration
External clock	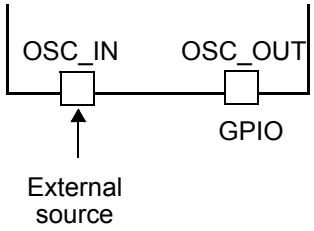
Crystal/Ceramic resonators	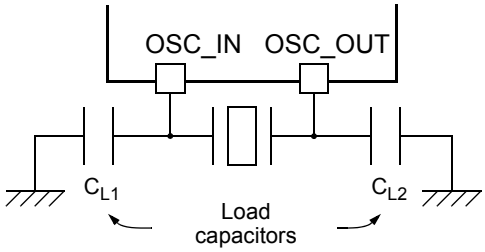

External crystal/ceramic resonator (HSE crystal)

The 4 to 48 MHz external oscillator has the advantage of producing a very accurate rate on the main clock.

The associated hardware configuration is shown in *Figure 17*. Refer to the electrical characteristics section of the *datasheet* for more details.

The HSERDY flag in the *Clock control register (RCC_CR)* indicates if the HSE oscillator is stable or not. At startup, the clock is not released until this bit is set by hardware. An interrupt can be generated if enabled in the *Clock interrupt enable register (RCC_CIER)*.

The HSE Crystal can be switched on and off using the HSEON bit in the *Clock control register (RCC_CR)*.

External source (HSE bypass)

In this mode, an external clock source must be provided. It can have a frequency of up to 48 MHz. You select this mode by setting the HSEBYP and HSEON bits in the *Clock control register (RCC_CR)*. The external clock signal (square, sinus or triangle) with ~40-60 % duty cycle depending on the frequency (refer to the datasheet) has to drive the OSC_IN pin while the OSC_OUT pin can be used a GPIO. See *Figure 17*.

6.2.2 HSI16 clock

The HSI16 clock signal is generated from an internal 16 MHz RC Oscillator.

The HSI16 RC oscillator has the advantage of providing a clock source at low cost (no external components). It also has a faster startup time than the HSE crystal oscillator however, even with calibration the frequency is less accurate than an external crystal oscillator or ceramic resonator.

The HSI16 clock can be selected as system clock after wakeup from Stop modes (Stop 0, Stop 1 or Stop 2). Refer to *Section 6.3: Low-power modes*. It can also be used as a backup clock source (auxiliary clock) if the HSE crystal oscillator fails. Refer to *Section 6.2.10: Clock security system (CSS)*.

Calibration

RC oscillator frequencies can vary from one chip to another due to manufacturing process variations, this is why each device is factory calibrated by ST for 1 % accuracy at T_A=25°C.

After reset, the factory calibration value is loaded in the HSICAL[7:0] bits in the *Internal clock sources calibration register (RCC_ICSCR)*.

If the application is subject to voltage or temperature variations this may affect the RC oscillator speed. You can trim the HSI16 frequency in the application using the HSITRIM[4:0] bits (or HSITRIM[6:0] on STM32L49x/L4Ax devices) in the *Internal clock sources calibration register (RCC_ICSCR)*.

For more details on how to measure the HSI16 frequency variation, refer to *Section 6.2.18: Internal/external clock measurement with TIM15/TIM16/TIM17*.

The HSIRDY flag in the *Clock control register (RCC_CR)* indicates if the HSI16 RC is stable or not. At startup, the HSI16 RC output clock is not released until this bit is set by hardware.

The HSI16 RC can be switched on and off using the HSION bit in the *Clock control register (RCC_CR)*.

The HSI16 signal can also be used as a backup source (Auxiliary clock) if the HSE crystal oscillator fails. Refer to *Section 6.2.10: Clock security system (CSS) on page 216*.

6.2.3 MSI clock

The MSI clock signal is generated from an internal RC oscillator. Its frequency range can be adjusted by software by using the MSIRANGE[3:0] bits in the *Clock control register (RCC_CR)*. Twelve frequency ranges are available: 100 kHz, 200 kHz, 400 kHz, 800 kHz, 1 MHz, 2 MHz, 4 MHz (default value), 8 MHz, 16 MHz, 24 MHz, 32 MHz and 48 MHz.

The MSI clock is used as system clock after restart from Reset, wakeup from Standby and Shutdown low-power modes. After restart from Reset, the MSI frequency is set to its default value 4 MHz. Refer to *Section 6.3: Low-power modes*.

The MSI clock can be selected as system clock after a wakeup from Stop mode (Stop 0, Stop 1 or Stop 2). Refer to *Section 6.3: Low-power modes*. It can also be used as a backup clock source (auxiliary clock) if the HSE crystal oscillator fails. Refer to *Section 6.2.10: Clock security system (CSS)*.

The MSI RC oscillator has the advantage of providing a low-cost (no external components) low-power clock source. In addition, when used in PLL-mode with the LSE, it provides a very accurate clock source which can be used by the USB OTG FS device, and feed the main PLL to run the system at the maximum speed 80 MHz.

The MSIRDY flag in the *Clock control register (RCC_CR)* indicates wether the MSI RC is stable or not. At startup, the MSI RC output clock is not released until this bit is set by hardware. The MSI RC can be switched on and off by using the MSION bit in the *Clock control register (RCC_CR)*.

Hardware auto calibration with LSE (PLL-mode)

When a 32.768 kHz external oscillator is present in the application, it is possible to configure the MSI in a PLL-mode by setting the MSIPLLEN bit in the *Clock control register (RCC_CR)*. When configured in PLL-mode, the MSI automatically calibrates itself thanks to the LSE. This mode is available for all MSI frequency ranges. At 48 MHz, the MSI in PLL-mode can be used for the USB OTG FS device, saving the need of an external high-speed crystal.

Software calibration

The MSI RC oscillator frequency can vary from one chip to another due to manufacturing process variations, this is why each device is factory calibrated by ST for 1 % accuracy at an ambient temperature, TA, of 25 °C. After reset, the factory calibration value is loaded in the MSICAL[7:0] bits in the *Internal clock sources calibration register (RCC_ICSCR)*. If the application is subject to voltage or temperature variations, this may affect the RC oscillator speed. You can trim the MSI frequency in the application by using the MSITRIM[7:0] bits in the RCC_ICSCR register. For more details on how to measure the MSI frequency variation please refer to *Section 6.2.18: Internal/external clock measurement with TIM15/TIM16/TIM17*.

6.2.4 HSI48 clock (only valid for STM32L49x/L4Ax devices)

The HSI48 clock signal is generated from an internal 48 MHz RC oscillator and can be used directly for USB and for random number generator (RNG) as well as SDMMC.

The internal 48 MHz RC oscillator is mainly dedicated to provide a high precision clock to the USB peripheral by means of a special Clock Recovery System (CRS) circuitry. The CRS

can use the USB SOF signal, the LSE or an external signal to automatically and quickly adjust the oscillator frequency on-fly. It is disabled as soon as the system enters Stop or Standby mode. When the CRS is not used, the HSI48 RC oscillator runs on its default frequency which is subject to manufacturing process variations.

For more details on how to configure and use the CRS peripheral please refer to *Section 7: Clock recovery system (CRS)*.

The HSI48RDY flag in the Clock recovery RC register (RCC_CRRCR) indicates whether the HSI48 RC oscillator is stable or not. At startup, the HSI48 RC oscillator output clock is not released until this bit is set by hardware.

The HSI48 can be switched on and off using the HSI48ON bit in the Clock recovery RC register (RCC_CRRCR).

6.2.5 PLL

The device embeds 3 PLLs: PLL, PLLSAI1, PLLSAI2. Each PLL provides up to three independent outputs. The internal PLLs can be used to multiply the HSI16, HSE or MSI output clock frequency. The PLLs input frequency must be between 4 and 16 MHz. The selected clock source is divided by a programmable factor PLLM from 1 to 8 to provide a clock frequency in the requested input range. Refer to *Figure 15: Clock tree (for STM32L47x/L48x devices)* and *Figure 16: Clock tree (for STM32L49x/L4Ax devices)* and *PLL configuration register (RCC_PLLCFGR)*.

The PLLs configuration (selection of the input clock and multiplication factor) must be done before enabling the PLL. Once the PLL is enabled, these parameters cannot be changed.

To modify the PLL configuration, proceed as follows:

1. Disable the PLL by setting PLLON to 0 in *Clock control register (RCC_CR)*.
2. Wait until PLLRDY is cleared. The PLL is now fully stopped.
3. Change the desired parameter.
4. Enable the PLL again by setting PLLON to 1.
5. Enable the desired PLL outputs by configuring PLLPEN, PLLQEN, PLLREN in *PLL configuration register (RCC_PLLCFGR)*.

An interrupt can be generated when the PLL is ready, if enabled in the *Clock interrupt enable register (RCC_CIER)*.

The same procedure is applied for changing the configuration of the PLLSAI1 or PLLSAI2:

1. Disable the PLLSAI1/PLLSAI2 by setting PLLSAI1ON/PLLSAI2ON to 0 in *Clock control register (RCC_CR)*.
2. Wait until PLLSAI1RDY/PLLSAI2RDY is cleared. The PLLSAI1/PLLSAI2 is now fully stopped.
3. Change the desired parameter.
4. Enable the PLLSAI1/PLLSAI2 again by setting PLLSAI1ON/PLLSAI2ON to 1.
5. Enable the desired PLL outputs by configuring PLLSAI1PEN/PLLSAI2PEN, PLLSAI1QEN, PLLSAI1REN/PLLSAI2REN in *PLLSAI1 configuration register (RCC_PLLSAI1CFGR)* and *PLLSAI2 configuration register (RCC_PLLSAI2CFGR)*.

The PLL output frequency must not exceed 80 MHz.

The enable bit of each PLL output clock (PLLPEN, PLLQEN, PLLREN, PLLSAI1PEN, PLLSAI1QEN, PLLSAI1REN, PLLSAI2PEN and PLLSAI2REN) can be modified at any time

without stopping the corresponding PLL. PLLREN cannot be cleared if PLLCLK is used as system clock.

6.2.6 LSE clock

The LSE crystal is a 32.768 kHz Low Speed External crystal or ceramic resonator. It has the advantage of providing a low-power but highly accurate clock source to the real-time clock peripheral (RTC) for clock/calendar or other timing functions.

The LSE crystal is switched on and off using the LSEON bit in *Backup domain control register (RCC_BDCR)*. The crystal oscillator driving strength can be changed at runtime using the LSEDRV[1:0] bits in the *Backup domain control register (RCC_BDCR)* to obtain the best compromise between robustness and short start-up time on one side and low-power-consumption on the other side. The LSE drive can be decreased to the lower drive capability (LSEDRV=00) when the LSE is ON. However, once LSEDRV is selected, the drive capability can not be increased if LSEON=1.

The LSERDY flag in the *Backup domain control register (RCC_BDCR)* indicates whether the LSE crystal is stable or not. At startup, the LSE crystal output clock signal is not released until this bit is set by hardware. An interrupt can be generated if enabled in the *Clock interrupt enable register (RCC_CIER)*.

External source (LSE bypass)

In this mode, an external clock source must be provided. It can have a frequency of up to 1 MHz. You select this mode by setting the LSEBYP and LSEON bits in the *AHB1 peripheral clocks enable in Sleep and Stop modes register (RCC_AHB1SMENR)*. The external clock signal (square, sinus or triangle) with ~50 % duty cycle has to drive the OSC32_IN pin while the OSC32_OUT pin can be used as GPIO. See *Figure 17*.

6.2.7 LSI clock

The LSI RC acts as a low-power clock source that can be kept running in Stop and Standby mode for the independent watchdog (IWDG), RTC and LCD. The clock frequency is 32 kHz. For more details, refer to the electrical characteristics section of the datasheets.

The LSI RC can be switched on and off using the LSION bit in the *Control/status register (RCC_CSR)*.

The LSIRDY flag in the *Control/status register (RCC_CSR)* indicates if the LSI oscillator is stable or not. At startup, the clock is not released until this bit is set by hardware. An interrupt can be generated if enabled in the *Clock interrupt enable register (RCC_CIER)*.

6.2.8 System clock (SYSCLK) selection

Four different clock sources can be used to drive the system clock (SYSCLK):

- MSI oscillator
- HSI16 oscillator
- HSE oscillator
- PLL

The system clock maximum frequency is 80 MHz. After a system reset, the MSI oscillator, at 4 MHz, is selected as system clock. When a clock source is used directly or through the PLL as a system clock, it is not possible to stop it.

A switch from one clock source to another occurs only if the target clock source is ready (clock stable after startup delay or PLL locked). If a clock source which is not yet ready is selected, the switch will occur when the clock source becomes ready. Status bits in the *Internal clock sources calibration register (RCC_ICSCR)* indicate which clock(s) is (are) ready and which clock is currently used as a system clock.

6.2.9 Clock source frequency versus voltage scaling

The following table gives the different clock source frequencies depending on the product voltage range.

Table 33. Clock source frequency

Product voltage range	Clock frequency			
	MSI	HSI16	HSE	PLL/PLLSAI1/PLLSAI2
Range 1 (1)	48 MHz	16 MHz	48 MHz	80 MHz (VCO max = 344 MHz)
Range 2(2)	24 MHz range	16 MHz	26 MHz	26 MHz (VCO max = 128 MHz)

1. Also for SMPS Range1 and SMPS Range2 High
2. Also for SMPS Range2 Low

6.2.10 Clock security system (CSS)

Clock Security System can be activated by software. In this case, the clock detector is enabled after the HSE oscillator startup delay, and disabled when this oscillator is stopped.

If a failure is detected on the HSE clock, the HSE oscillator is automatically disabled, a clock failure event is sent to the break input of the advanced-control timers (TIM1/TIM8 and TIM15/16/17) and an interrupt is generated to inform the software about the failure (Clock Security System Interrupt CSSI), allowing the MCU to perform rescue operations. The CSSI is linked to the Cortex®-M4 NMI (Non-Maskable Interrupt) exception vector.

Note: Once the CSS is enabled and if the HSE clock fails, the CSS interrupt occurs and a NMI is automatically generated. The NMI will be executed indefinitely unless the CSS interrupt pending bit is cleared. As a consequence, in the NMI ISR user must clear the CSS interrupt by setting the CSSC bit in the Clock interrupt clear register (RCC_CICR).

If the HSE oscillator is used directly or indirectly as the system clock (indirectly means: it is used as PLL input clock, and the PLL clock is used as system clock), a detected failure causes a switch of the system clock to the MSI or the HSI16 oscillator depending on the STOPWUCK configuration in the *Clock configuration register (RCC_CFGR)*, and the disabling of the HSE oscillator. If the HSE clock (divided or not) is the clock entry of the PLL used as system clock when the failure occurs, the PLL is disabled too.

6.2.11 Clock security system on LSE

A Clock Security System on LSE can be activated by software writing the LSECSSON bit in the *Backup domain control register (RCC_BDCR)*. This bit can be disabled only by a hardware reset or RTC software reset, or after a failure detection on LSE. LSECSSON must be written after LSE and LSI are enabled (LSEON and LSION enabled) and ready (LSERDY and LSIRDY set by hardware), and after the RTC clock has been selected by RTCSEL.

The CSS on LSE is working in all modes except VBAT. It is working also under system reset (excluding power on reset). If a failure is detected on the external 32 kHz oscillator, the LSE clock is no longer supplied to the RTC but no hardware action is made to the registers. If the MSI was in PLL-mode, this mode is disabled.

In Standby mode a wakeup is generated. In other modes an interrupt can be sent to wakeup the software (see *Clock interrupt enable register (RCC_CIER)*, *Clock interrupt flag register (RCC_CIFR)*, *Clock interrupt clear register (RCC_CICR)*).

The software MUST then disable the LSECSSON bit, stop the defective 32 kHz oscillator (disabling LSEON), and change the RTC clock source (no clock or LSI or HSE, with RTCSEL), or take any required action to secure the application.

The frequency of LSE oscillator have to be higher than 30 kHz to avoid false positive CSS detection.

6.2.12 USB Clock

The USB clock can be derived from either:

- The RC 48 MHz (HSI48) clock (only for STM32L49x/L4Ax devices)
- The MSI clock when auto-trimmed by the LSE

The HSI48 48 MHz clock can be coupled to the clock recovery system allowing adequate clock connection for the USB OTG FS in device mode (removing the need for an external high speed or low speed crystal).

The MSI clock when auto-trimmed by the LSE, can provide a very accurate clock source which can be used by the USB OTG FS in device mode (removing the need for an external high speed crystal).

6.2.13 ADC clock

The ADC clock is derived from the system clock, or from the PLLSAI1 or the PLLSAI2 output. It can reach 80 MHz and can be divided by the following prescalers values: 1,2,4,6,8,10,12,16,32,64,128 or 256 by configuring the ADC123_CCR register. It is asynchronous to the AHB clock. Alternatively, the ADC clock can be derived from the AHB clock of the ADC bus interface, divided by a programmable factor (1, 2 or 4). This programmable factor is configured using the CKMODE bit fields in the ADC123_CCR.

If the programmed factor is ‘1’, the AHB prescaler must be set to ‘1’.

6.2.14 RTC clock

The RTCCLK clock source can be either the HSE/32, LSE or LSI clock. It is selected by programming the RTCSEL[1:0] bits in the *Backup domain control register (RCC_BDCR)*. This selection cannot be modified without resetting the Backup domain. The system must always be configured so as to get a PCLK frequency greater then or equal to the RTCCLK frequency for a proper operation of the RTC.

The LSE clock is in the Backup domain, whereas the HSE and LSI clocks are not. Consequently:

- If LSE is selected as RTC clock:
  - The RTC continues to work even if the V_{DD} supply is switched off, provided the V_{BAT} supply is maintained.
- If LSI is selected as the RTC clock:
  - The RTC state is not guaranteed if the V_{DD} supply is powered off.
- If the HSE clock divided by a prescaler is used as the RTC clock:
  - The RTC state is not guaranteed if the V_{DD} supply is powered off or if the internal voltage regulator is powered off (removing power from the V_{CORE} domain).

When the RTC clock is LSE or LSI, the RTC remains clocked and functional under system reset.

6.2.15 Timer clock

The timer clock frequencies are automatically defined by hardware. There are two cases:

1. If the APB prescaler equals 1, the timer clock frequencies are set to the same frequency as that of the APB domain.
2. Otherwise, they are set to twice (×2) the frequency of the APB domain.

6.2.16 Watchdog clock

If the Independent watchdog (IWDG) is started by either hardware option or software access, the LSI oscillator is forced ON and cannot be disabled. After the LSI oscillator temporization, the clock is provided to the IWDG.

6.2.17 Clock-out capability

- MCO

  The microcontroller clock output (MCO) capability allows the clock to be output onto the external MCO pin. One of eight clock signals can be selected as the MCO clock.
  - LSI
  - LSE
  - SYSCLK
  - HSI16
  - HSI48 (for STM32L49x/L4Ax devices)
  - HSE
  - PLLCLK
  - MSI

  The selection is controlled by the MCOSEL[2:0] (or MCOSEL[3:0] for STM32L49x/L4Ax devices) bits of the *Clock configuration register (RCC_CFGR)*. The

selected clock can be divided with the MCOPRE[2:0] field of the *Clock configuration register (RCC_CFGR)*.

- LSCO

  Another output (LSCO) allows a low speed clock to be output onto the external LSCO pin:

  – LSI

  – LSE

  This output remains available in Stop (Stop 0, Stop 1 and Stop 2) and Standby modes. The selection is controlled by the LSCOSEL, and enabled with the LSCOEN in the *Backup domain control register (RCC_BDCR)*.

The MCO clock output requires the corresponding alternate function selected on the MCO pin, the LSCO pin should be left in default POR state.

6.2.18 Internal/external clock measurement with TIM15/TIM16/TIM17

It is possible to indirectly measure the frequency of all on-board clock sources by mean of the TIM15, TIM16 or TIM17 channel 1 input capture, as represented on *Figure 18*, *Figure 19* and *Figure 20*.

Figure 18. Frequency measurement with TIM15 in capture mode

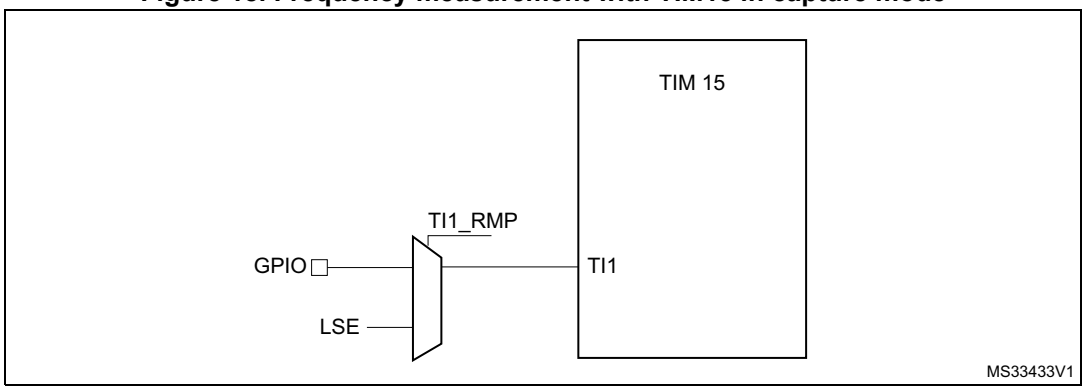

The input capture channel of the Timer 15 can be a GPIO line or an internal clock of the MCU. This selection is performed through the TI1_RMP bit in the TIM15_OR register. The possibilities are the following ones:

- TIM15 Channel1 is connected to the GPIO. Refer to the alternate function mapping in the device datasheets.
- TIM15 Channel1 is connected to the LSE.

Figure 19. Frequency measurement with TIM16 in capture mode

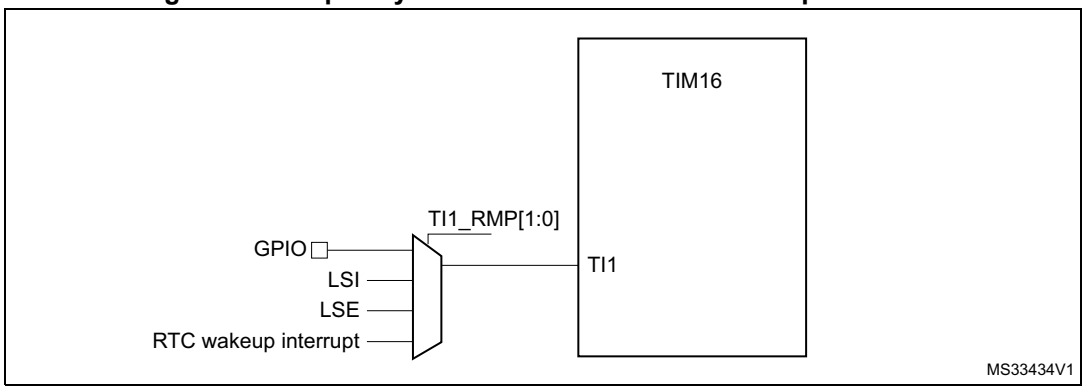

The input capture channel of the Timer 16 can be a GPIO line or an internal clock of the MCU. This selection is performed through the TI1_RMP[1:0] bits in the TIM16_OR register. The possibilities are the following ones:

- TIM16 Channel1 is connected to the GPIO. Refer to the alternate function mapping in the device datasheets.
- TIM16 Channel1 is connected to the LSI clock.
- TIM16 Channel1 is connected to the LSE clock.
- TIM16 Channel1 is connected to the RTC wakeup interrupt signal. In this case the RTC interrupt should be enabled.

Figure 20. Frequency measurement with TIM17 in capture mode

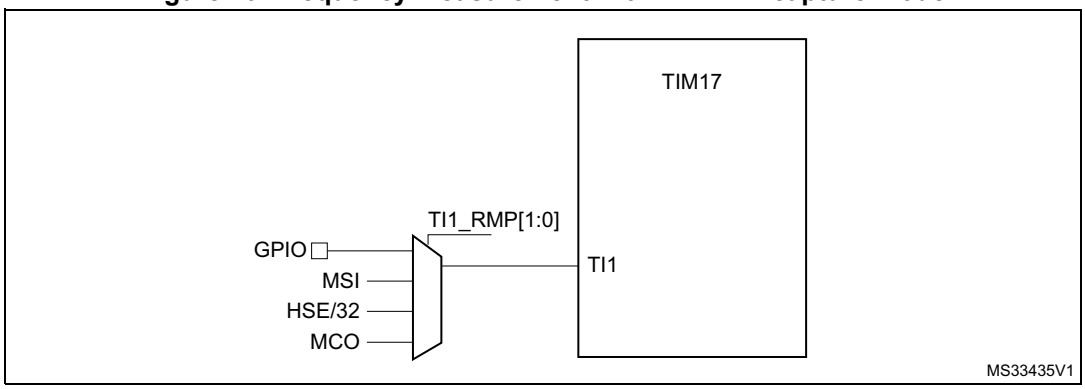

The input capture channel of the Timer 17 can be a GPIO line or an internal clock of the MCU. This selection is performed through the TI1_RMP[1:0] bits in the TIM17_OR register. The possibilities are the following ones:

- TIM17 Channel1 is connected to the GPIO. Refer to the alternate function mapping in the device datasheets.
- TIM17 Channel1 is connected to the MSI Clock.
- TIM17 Channel1 is connected to the HSE/32 Clock.
- TIM17 Channel1 is connected to the microcontroller clock output (MCO), this selection is controlled by the MCO[2:0] (or MCOSEL[3:0] for STM32L49x/L4Ax devices) bits of the Clock configuration register (RCC_CFGR).

Calibration of the HSI16 and the MSI

For TIM15 and TIM16, the primary purpose of connecting the LSE to the channel 1 input capture is to be able to precisely measure the HSI16 and MSI system clocks (for this, either the HSI16 or MSI should be used as the system clock source). The number of HSI16 (MSI, respectively) clock counts between consecutive edges of the LSE signal provides a measure of the internal clock period. Taking advantage of the high precision of LSE crystals (typically a few tens of ppm's), it is possible to determine the internal clock frequency with the same resolution, and trim the source to compensate for manufacturing, process, temperature and/or voltage related frequency deviations.

The MSI and HSI16 oscillator both have dedicated user-accessible calibration bits for this purpose.

The basic concept consists in providing a relative measurement (e.g. the HSI16/LSE ratio): the precision is therefore closely related to the ratio between the two clock sources. The higher the ratio is, the better the measurement will be.

If LSE is not available, HSE/32 will be the better option in order to reach the most precise calibration possible.

It is however not possible to have a good enough resolution when the MSI clock is low (typically below 1 MHz). In this case, it is advised to:

- accumulate the results of several captures in a row
- use the timer's input capture prescaler (up to 1 capture every 8 periods)
- use the RTC wakeup interrupt signal (when the RTC is clocked by the LSE) as the input for the channel1 input capture. This improves the measurement precision. For this purpose the RTC wakeup interrupt must be enable.

Calibration of the LSI

The calibration of the LSI will follow the same pattern that for the HSI16, but changing the reference clock. It will be necessary to connect LSI clock to the channel 1 input capture of the TIM16. Then define the HSE as system clock source, the number of his clock counts between consecutive edges of the LSI signal provides a measure of the internal low speed clock period.

The basic concept consists in providing a relative measurement (e.g. the HSE/LSI ratio): the precision is therefore closely related to the ratio between the two clock sources. The higher the ratio is, the better the measurement will be.

6.2.19 Peripheral clock enable register (RCC_AHBxENR, RCC_APBxENRy)

Each peripheral clock can be enabled by the xxxxEN bit of the RCC_AHBxENR, RCC_APBxENRy registers.

When the peripheral clock is not active, the peripheral registers read or write accesses are not supported.

The enable bit has a synchronization mechanism to create a glitch free clock for the peripheral. After the enable bit is set, there is a 2 clock cycles delay before the clock be active.

Caution: Just after enabling the clock for a peripheral, software must wait for a delay before accessing the peripheral registers.

6.3 Low-power modes

- AHB and APB peripheral clocks, including DMA clock, can be disabled by software.
- Sleep and Low Power Sleep modes stops the CPU clock. The memory interface clocks (Flash and SRAM1 and SRAM2 interfaces) can be stopped by software during sleep mode. The AHB to APB bridge clocks are disabled by hardware during Sleep mode when all the clocks of the peripherals connected to them are disabled.
- Stop modes (Stop 0, Stop 1 and Stop 2) stops all the clocks in the V_{CORE} domain and disables the three PLL, the HSI16, the MSI and the HSE oscillators.

  All U(S)ARTs, LPUARTs and I^2Cs have the capability to enable the HSI16 oscillator even when the MCU is in Stop mode (if HSI16 is selected as the clock source for that peripheral).

  All U(S)ARTs and LPUARTs can also be driven by the LSE oscillator when the system is in Stop mode (if LSE is selected as clock source for that peripheral) and the LSE oscillator is enabled (LSEON). In that case the LSE remains always ON in Stop mode (they do not have the capability to turn on the LSE oscillator).
- Standby and Shutdown modes stops all the clocks in the V_{CORE} domain and disables the PLL, the HSI16, the MSI and the HSE oscillators.

The CPU's deepsleep mode can be overridden for debugging by setting the DBG_STOP or DBG_STANDBY bits in the DBGMCU_CR register.

When leaving the Stop modes (Stop 0, Stop 1 or Stop 2), the system clock is either MSI or HSI16, depending on the software configuration of the STOPWUCK bit in the RCC_CFGR register. The frequency (range and user trim) of the MSI oscillator is the one configured before entering Stop mode. The user trim of HSI16 is kept. If the MSI was in PLL-mode before entering Stop mode, the PLL-mode stabilization time must be waited for after wakeup even if the LSE was kept ON during the Stop mode.

When leaving the Standby and Shutdown modes, the system clock is MSI. The MSI frequency at wakeup from Standby mode is configured with the MSISRANGE is the RCC_CSR register, from 1 to 8 MHz. The MSI frequency at wakeup from Shutdown mode is 4 MHz. The user trim is lost.

If a Flash memory programming operation is on going, Stop, Standby and Shutdown modes entry is delayed until the Flash memory interface access is finished. If an access to the APB domain is ongoing, Stop, Standby and Shutdown modes entry is delayed until the APB access is finished.

6.4 RCC registers

6.4.1 Clock control register (RCC_CR)

Address offset: 0x00

Reset value: 0x0000 0063. HSEBYP is cleared upon power-on reset. It is not affected upon other types of reset.

Access: no wait state, word, half-word and byte access

31	30	29	28	27	26	25	24	23	22	21	20	19	18	17	16
Res.	Res.	PLL SAI2 RDY	PLL SAI2 ON	PLL SAI1 RDY	PLL SAI1 ON	PLL RDY	PLLON	Res.	Res.	Res.	Res.	CSS ON	HSE BYP	HSE RDY	HSE ON
		r	rw	r	rw	r	rw					rs	rw	r	rw

15	14	13	12	11	10	9	8	7	6	5	4	3	2	1	0
Res.	Res.	Res.	Res.	HSI ASFS	HSI RDY	HSI KERON	HSION	MSIRANGE[3:0]				MSI RGSEL	MSI PLLEN	MSI RDY	MSION
				rw	r	rw	rw	rw	rw	rw	rw	rs	rw	r	rw

Bits 31:30 Reserved, must be kept at reset value.

Bit 29 **PLLSAI2RDY**: SAI2 PLL clock ready flag
Set by hardware to indicate that the PLLSAI2 is locked.
0: PLLSAI2 unlocked
1: PLLSAI2 locked

Bit 28 **PLLSAI2ON**: SAI2 PLL enable
Set and cleared by software to enable PLLSAI2.
Cleared by hardware when entering Stop, Standby or Shutdown mode.
0: PLLSAI2 OFF
1: PLLSAI2 ON

Bit 27 **PLLSAI1RDY**: SAI1 PLL clock ready flag
Set by hardware to indicate that the PLLSAI1 is locked.
0: PLLSAI1 unlocked
1: PLLSAI1 locked

Bit 26 **PLLSAI1ON**: SAI1 PLL enable
Set and cleared by software to enable PLLSAI1.
Cleared by hardware when entering Stop, Standby or Shutdown mode.
0: PLLSAI1 OFF
1: PLLSAI1 ON

Bit 25 **PLLRDY**: Main PLL clock ready flag
Set by hardware to indicate that the main PLL is locked.
0: PLL unlocked
1: PLL locked

Bit 24 **PLLON**: Main PLL enable
Set and cleared by software to enable the main PLL.
Cleared by hardware when entering Stop, Standby or Shutdown mode. This bit cannot be reset if the PLL clock is used as the system clock.
0: PLL OFF
1: PLL ON

Bits 23:20 Reserved, must be kept at reset value.

Bit 19 **CSSON**: Clock security system enable

Set by software to enable the clock security system. When CSSON is set, the clock detector is enabled by hardware when the HSE oscillator is ready, and disabled by hardware if a HSE clock failure is detected. This bit is set only and is cleared by reset.

0: Clock security system OFF (clock detector OFF)

1: Clock security system ON (Clock detector ON if the HSE oscillator is stable, OFF if not).

Bit 18 **HSEBYP**: HSE crystal oscillator bypass

Set and cleared by software to bypass the oscillator with an external clock. The external clock must be enabled with the HSEON bit set, to be used by the device. The HSEBYP bit can be written only if the HSE oscillator is disabled.

0: HSE crystal oscillator not bypassed

1: HSE crystal oscillator bypassed with external clock

Bit 17 **HSERDY**: HSE clock ready flag

Set by hardware to indicate that the HSE oscillator is stable.

0: HSE oscillator not ready

1: HSE oscillator ready

Note: Once the HSEON bit is cleared, HSERDY goes low after 6 HSE clock cycles.

Bit 16 **HSEON**: HSE clock enable

Set and cleared by software.

Cleared by hardware to stop the HSE oscillator when entering Stop, Standby or Shutdown mode. This bit cannot be reset if the HSE oscillator is used directly or indirectly as the system clock.

0: HSE oscillator OFF

1: HSE oscillator ON

Bits 15:12 Reserved, must be kept at reset value.

Bit 11 **HSIASFS**: HSI16 automatic start from Stop

Set and cleared by software. When the system wakeup clock is MSI, this bit is used to wakeup the HSI16 is parallel of the system wakeup.

0: HSI16 oscillator is not enabled by hardware when exiting Stop mode with MSI as wakeup clock.

1: HSI16 oscillator is enabled by hardware when exiting Stop mode with MSI as wakeup clock.

Bit 10 **HSIRDY**: HSI16 clock ready flag

Set by hardware to indicate that HSI16 oscillator is stable. This bit is set only when HSI16 is enabled by software by setting HSION.

0: HSI16 oscillator not ready

1: HSI16 oscillator ready

Note: Once the HSION bit is cleared, HSIRDY goes low after 6 HSI16 clock cycles.

Bit 9 **HSIKERON**: HSI16 always enable for peripheral kernels.

Set and cleared by software to force HSI16 ON even in Stop modes. The HSI16 can only feed USARTs and I^2Cs peripherals configured with HSI16 as kernel clock. Keeping the HSI16 ON in Stop mode allows to avoid slowing down the communication speed because of the HSI16 startup time. This bit has no effect on HSION value.

0: No effect on HSI16 oscillator.

1: HSI16 oscillator is forced ON even in Stop mode.

Bit 8 **HSION**: HSI16 clock enable

Set and cleared by software.

Cleared by hardware to stop the HSI16 oscillator when entering Stop, Standby or Shutdown mode.

Set by hardware to force the HSI16 oscillator ON when STOPWUCK=1 or HSIASFS = 1 when leaving Stop modes, or in case of failure of the HSE crystal oscillator.

This bit is set by hardware if the HSI16 is used directly or indirectly as system clock.

0: HSI16 oscillator OFF

1: HSI16 oscillator ON

Bits 7:4 **MSIRANGE[3:0]**: MSI clock ranges

These bits are configured by software to choose the frequency range of MSI when MSIRGSEL is set.12 frequency ranges are available:

0000: range 0 around 100 kHz

0001: range 1 around 200 kHz

0010: range 2 around 400 kHz

0011: range 3 around 800 kHz

0100: range 4 around 1M Hz

0101: range 5 around 2 MHz

0110: range 6 around 4 MHz (reset value)

0111: range 7 around 8 MHz

1000: range 8 around 16 MHz

1001: range 9 around 24 MHz

1010: range 10 around 32 MHz

1011: range 11 around 48 MHz

others: not allowed (hardware write protection)

Note: Warning: MSIRANGE can be modified when MSI is OFF (MSION=0) or when MSI is ready (MSIRDY=1). MSIRANGE must NOT be modified when MSI is ON and NOT ready (MSION=1 and MSIRDY=0)

Bit 3 **MSIRGSEL**: MSI clock range selection

Set by software to select the MSI clock range with MSIRANGE[3:0]. Write 0 has no effect.

After a standby or a reset MSIRGSEL is at 0 and the MSI range value is provided by MSISRANGE in CSR register.

0: MSI Range is provided by MSISRANGE[3:0] in RCC_CSR register

1: MSI Range is provided by MSIRANGE[3:0] in the RCC_CR register

Bit 2 **MSIPLLEN**: MSI clock PLL enable

Set and cleared by software to enable/ disable the PLL part of the MSI clock source.

MSIPLLEN must be enabled after LSE is enabled (LSEON enabled) and ready (LSERDY set by hardware).There is a hardware protection to avoid enabling MSIPLLEN if LSE is not ready.

This bit is cleared by hardware when LSE is disabled (LSEON = 0) or when the Clock Security System on LSE detects a LSE failure (refer to RCC_CSR register).

0: MSI PLL OFF

1: MSI PLL ON

Bit 1 **MSIRDY**: MSI clock ready flag

This bit is set by hardware to indicate that the MSI oscillator is stable.

0: MSI oscillator not ready

1: MSI oscillator ready

Note: Once the MSION bit is cleared, MSIRDY goes low after 6 MSI clock cycles.

Bit 0 **MSION**: MSI clock enable

This bit is set and cleared by software.

Cleared by hardware to stop the MSI oscillator when entering Stop, Standby or Shutdown mode.

Set by hardware to force the MSI oscillator ON when exiting Standby or Shutdown mode.

Set by hardware to force the MSI oscillator ON when STOPWUCK=0 when exiting from Stop modes, or in case of a failure of the HSE oscillator

Set by hardware when used directly or indirectly as system clock.

0: MSI oscillator OFF

1: MSI oscillator ON

6.4.2 Internal clock sources calibration register (RCC_ICSCR)

Address offset: 0x04

Reset value:

0x10XX 00XX where X is factory-programmed (for STM32L47x/L48x devices).

0x40XX 00XX where X is factory-programmed (for STM32L49x/L4Ax devices).

Access: no wait state, word, half-word and byte access

31	30	29	28	27	26	25	24	23	22	21	20	19	18	17	16
Res.	HSITRIM[6:0]							HSICAL[7:0]							
	rw	rw	rw	rw	rw	rw	rw	r	r	r	r	r	r	r	r

15	14	13	12	11	10	9	8	7	6	5	4	3	2	1	0
MSITRIM[7:0]								MSICAL[7:0]							
rw	rw	rw	rw	rw	rwr	rw	rw	r	r	r	r	r	r	r	r

Bit 31 Reserved, must be kept at reset value.

Bits 30:24 **HSITRIM[6:0]**: HSI16 clock trimming (only HSITRIM[4:0] on STM32L47x/L48x)

These bits provide an additional user-programmable trimming value that is added to the HSICAL[7:0] bits. It can be programmed to adjust to variations in voltage and temperature that influence the frequency of the HSI16.

The default value is 16 for STM32L47x/L48x devices and 64 for STM32L49x/L4Ax devices; when added to the HSICAL value, the default HSITRIM value will trim the HSI16 to 16 MHz ± 1 %.

Bits 23:16 **HSICAL[7:0]**: HSI16 clock calibration

These bits are initialized at startup with the factory-programmed HSI16 calibration trim value. When HSITRIM is written, HSICAL is updated with the sum of HSITRIM and the factory trim value.

Bits 15:8 **MSITRIM[7:0]**: MSI clock trimming

These bits provide an additional user-programmable trimming value that is added to the MSICAL[7:0] bits. It can be programmed to adjust to variations in voltage and temperature that influence the frequency of the MSI.

Bits 7:0 **MSICAL[7:0]**: MSI clock calibration

These bits are initialized at startup with the factory-programmed MSI calibration trim value. When MSITRIM is written, MSICAL is updated with the sum of MSITRIM and the factory trim value.

6.4.3 Clock configuration register (RCC_CFGR)

Address offset: 0x08

Reset value: 0x0000 0000

Access: 0 ≤ wait state ≤ 2, word, half-word and byte access

1 or 2 wait states inserted only if the access occurs during clock source switch.

From 0 to 15 wait states inserted if the access occurs when the APB or AHB prescalers values update is on going.

31	30	29	28	27	26	25	24	23	22	21	20	19	18	17	16
Res.	MCOPRE[2:0]			MCOSEL[3:0]				Res.	Res.	Res.	Res.	Res.	Res.	Res.	Res.
	rw	rw	rw	rw	rw	rw	rw								

15	14	13	12	11	10	9	8	7	6	5	4	3	2	1	0
STOP WUCK	Res.	PPRE2[2:0]			PPRE1[2:0]			HPRE[3:0]				SWS[1:0]		SW[1:0]	
rw		rw	rw	rw	rw	rw	rw	rw	rw	rw	rw	r	r	rw	rw

Bit 31 Reserved, must be kept at reset value.

Bits 30:28 **MCOPRE[2:0]**: Microcontroller clock output prescaler
These bits are set and cleared by software.
It is highly recommended to change this prescaler before MCO output is enabled.
000: MCO is divided by 1
001: MCO is divided by 2
010: MCO is divided by 4
011: MCO is divided by 8
100: MCO is divided by 16
Others: not allowed

Bits 27:24 **MCOSEL[3:0]**: Microcontroller clock output (MCOSEL[2:0] only for STM32L47x/L48x devices)
Set and cleared by software.
0000: MCO output disabled, no clock on MCO
0001: SYSCLK system clock selected
0010: MSI clock selected.
0011: HSI16 clock selected.
0100: HSE clock selected
0101: Main PLL clock selected
0110: LSI clock selected
0111: LSE clock selected
1000: Internal HSI48 clock selected (only for STM32L49x/L4Ax devices)
Others: Reserved

Note: This clock output may have some truncated cycles at startup or during MCO clock source switching.

Bits 23:16 Reserved, must be kept at reset value.

Bit 15 **STOPWUCK:** Wakeup from Stop and CSS backup clock selection

Set and cleared by software to select the system clock used when exiting Stop mode.
The selected clock is also used as emergency clock for the Clock Security System on HSE.
Warning: STOPWUCK must not be modified when the Clock Security System is enabled by HSECSSON in RCC_CR register and the system clock is HSE (SWS="10") or a switch on HSE is requested (SW="10").
0: MSI oscillator selected as wakeup from stop clock and CSS backup clock.
1: HSI16 oscillator selected as wakeup from stop clock and CSS backup clock

Bit 14 Reserved, must be kept at reset value.

Bits 13:11 **PPRE2[2:0]**: APB high-speed prescaler (APB2)

Set and cleared by software to control the division factor of the APB2 clock (PCLK2).
0xx: HCLK not divided
100: HCLK divided by 2
101: HCLK divided by 4
110: HCLK divided by 8
111: HCLK divided by 16

Bits 10:8 **PPRE1[2:0]:**APB low-speed prescaler (APB1)

Set and cleared by software to control the division factor of the APB1 clock (PCLK1).
0xx: HCLK not divided
100: HCLK divided by 2
101: HCLK divided by 4
110: HCLK divided by 8
111: HCLK divided by 16

Bits 7:4 **HPRE[3:0]**: AHB prescaler

Set and cleared by software to control the division factor of the AHB clock.

Caution: Depending on the device voltage range, the software has to set correctly these bits to ensure that the system frequency does not exceed the maximum allowed frequency (for more details please refer to *Section 5.1.8: Dynamic voltage scaling management*). After a write operation to these bits and before decreasing the voltage range, this register must be read to be sure that the new value has been taken into account.

0xxx: SYSCLK not divided
1000: SYSCLK divided by 2
1001: SYSCLK divided by 4
1010: SYSCLK divided by 8
1011: SYSCLK divided by 16
1100: SYSCLK divided by 64
1101: SYSCLK divided by 128
1110: SYSCLK divided by 256
1111: SYSCLK divided by 512

Bits 3:2 **SWS[1:0]**: System clock switch status

Set and cleared by hardware to indicate which clock source is used as system clock.
00: MSI oscillator used as system clock
01: HSI16 oscillator used as system clock
10: HSE used as system clock
11: PLL used as system clock

Bits 1:0 **SW[1:0]**: System clock switch

Set and cleared by software to select system clock source (SYSCLK).
Configured by HW to force MSI oscillator selection when exiting Standby or Shutdown mode.
Configured by HW to force MSI or HSI16 oscillator selection when exiting Stop mode or in case of failure of the HSE oscillator, depending on STOPWUCK value.
00: MSI selected as system clock
01: HSI16 selected as system clock
10: HSE selected as system clock
11: PLL selected as system clock

6.4.4 PLL configuration register (RCC_PLLCFGR)

Address offset: 0x0C

Reset value: 0x0000 1000

Access: no wait state, word, half-word and byte access

This register is used to configure the PLL clock outputs according to the formulas:

- f(VCO clock) = f(PLL clock input) × (PLLN / PLLM)
- f(PLL_P) = f(VCO clock) / PLLP
- f(PLL_Q) = f(VCO clock) / PLLQ
- f(PLL_R) = f(VCO clock) / PLLR

31	30	29	28	27	26	25	24	23	22	21	20	19	18	17	16
PLLPDIV[4:0]					PLLR[1:0]		PLL REN	Res.	PLLQ[1:0]		PLL QEN	Res.	Res.	PLLP	PLL PEN
rw	rw	rw	rw	rw	rw	rw	rw		rw	rw	rw			rw	rw

15	14	13	12	11	10	9	8	7	6	5	4	3	2	1	0
Res.	PLLN[7:0]							Res.	PLLM[2:0]			Res.	Res.	PLLSRC[1:0]	
	rw	rw	rw	rw	rw	rw	rw		rw	rw	rw			rw	rw

Bits 31:27 **PLLPDIV[4:0]**: Main PLL division factor for PLLSAI2CLK (only for STM32L49x/L4Ax devices)

Set and cleared by software to control the SAI1 or SAI2 clock frequency. PLLSAI3CLK output clock frequency = VCO frequency / PLLPDIV.
00000: PLLSAI3CLK is controlled by the bit PLLP
00001: Reserved.
00010: PLLSAI3CLK = VCO / 2
....
11111: PLLSAI3CLK = VCO / 31

Bits 26:25 **PLLR[1:0]**: Main PLL division factor for PLLCLK (system clock)

Set and cleared by software to control the frequency of the main PLL output clock PLLCLK. This output can be selected as system clock. These bits can be written only if PLL is disabled.

PLLCLK output clock frequency = VCO frequency / PLLR with PLLR = 2, 4, 6, or 8

00: PLLR = 2

01: PLLR = 4

10: PLLR = 6

11: PLLR = 8

Caution: The software has to set these bits correctly not to exceed 80 MHz on this domain.

Bit 24 **PLLREN**: Main PLL PLLCLK output enable

Set and reset by software to enable the PLLCLK output of the main PLL (used as system clock).

This bit cannot be written when PLLCLK output of the PLL is used as System Clock.

In order to save power, when the PLLCLK output of the PLL is not used, the value of PLLREN should be 0.

0: PLLCLK output disable

1: PLLCLK output enable

Bit 23 Reserved, must be kept at reset value.

Bits 22:21 **PLLQ[1:0]**: Main PLL division factor for PLL48M1CLK (48 MHz clock).

Set and cleared by software to control the frequency of the main PLL output clock PLL48M1CLK. This output can be selected for USB, RNG, SDMMC (48 MHz clock). These bits can be written only if PLL is disabled.

PLL48M1CLK output clock frequency = VCO frequency / PLLQ with PLLQ = 2, 4, 6, or 8

00: PLLQ = 2

01: PLLQ = 4

10: PLLQ = 6

11: PLLQ = 8

Caution: The software has to set these bits correctly not to exceed 80 MHz on this domain.

Bit 20 **PLLQEN**: Main PLL PLL48M1CLK output enable

Set and reset by software to enable the PLL48M1CLK output of the main PLL.

In order to save power, when the PLL48M1CLK output of the PLL is not used, the value of PLLQEN should be 0.

0: PLL48M1CLK output disable

1: PLL48M1CLK output enable

Bits 19:18 Reserved, must be kept at reset value.

Bit 17 **PLLP**: Main PLL division factor for PLLSAI3CLK (SAI1 and SAI2 clock).

Set and cleared by software to control the frequency of the main PLL output clock PLLSAI3CLK. This output can be selected for SAI1 or SAI2. These bits can be written only if PLL is disabled.

(When the PLLPDIV[4:0] is set to “00000” only for STM32L49x/L4Ax devices)PLLSAI3CLK output clock frequency = VCO frequency / PLLP with PLLP =7, or 17

0: PLLP = 7

1: PLLP = 17

Caution: The software has to set these bits correctly not to exceed 80 MHz on this domain.

Bit 16 **PLLPEN**: Main PLL PLLSAI3CLK output enable

Set and reset by software to enable the PLLSAI3CLK output of the main PLL.

In order to save power, when the PLLSAI3CLK output of the PLL is not used, the value of PLLPEN should be 0.

0: PLLSAI3CLK output disable

1: PLLSAI3CLK output enable

Bit 15 Reserved, must be kept at reset value.

Bits 14:8 **PLLN[6:0]**: Main PLL multiplication factor for VCO

Set and cleared by software to control the multiplication factor of the VCO. These bits can be written only when the PLL is disabled.

VCO output frequency = VCO input frequency x PLLN with 8 =< PLLN =< 86

0000000: PLLN = 0 wrong configuration

0000001: PLLN = 1 wrong configuration

...

0000111: PLLN = 7 wrong configuration

0001000: PLLN = 8

0001001: PLLN = 9

...

1010101: PLLN = 85

1010110: PLLN = 86

1010111: PLLN = 87 wrong configuration

...

1111111: PLLN = 127 wrong configuration

Caution: The software has to set correctly these bits to assure that the VCO output frequency is between 64 and 344 MHz.

Bit 7 Reserved, must be kept at reset value.

Bits 6:4 **PLLM:** Division factor for the main PLL and audio PLL (PLLSAI1 and PLLSAI2) input clock

Set and cleared by software to divide the PLL, PLLSAI1 and PLLSAI2 input clock before the VCO. These bits can be written only when all PLLs are disabled.

VCO input frequency = PLL input clock frequency / PLLM with 1 <= PLLM <= 8

000: PLLM = 1

001: PLLM = 2

010: PLLM = 3

011: PLLM = 4

100: PLLM = 5

101: PLLM = 6

110: PLLM = 7

111: PLLM = 8

Caution: The software has to set these bits correctly to ensure that the VCO input frequency ranges from 4 to 16 MHz.

Bits 3:2 Reserved, must be kept at reset value.

Bits 1:0 **PLLSRC**: Main PLL, PLLSAI1 and PLLSAI2 entry clock source

Set and cleared by software to select PLL, PLLSAI1 and PLLSAI2 clock source. These bits can be written only when PLL, PLLSAI1 and PLLSAI2 are disabled.
In order to save power, when no PLL is used, the value of PLLSRC should be 00.
00: No clock sent to PLL, PLLSAI1 and PLLSAI2
01: MSI clock selected as PLL, PLLSAI1 and PLLSAI2 clock entry
10: HSI16 clock selected as PLL, PLLSAI1 and PLLSAI2 clock entry
11: HSE clock selected as PLL, PLLSAI1 and PLLSAI2 clock entry

6.4.5 PLLSAI1 configuration register (RCC_PLLSAI1CFGR)

Address offset: 0x10

Reset value: 0x0000 1000

Access: no wait state, word, half-word and byte access

This register is used to configure the PLLSAI1 clock outputs according to the formulas:

- f(VCOSAI1 clock) = f(PLL clock input) × (PLLSAI1N / PLLM)
- f(PLLSAI1_P) = f(VCOSAI1 clock) / PLLSAI1P
- f(PLLSAI1_Q) = f(VCOSAI1 clock) / PLLSAI1Q
- f(PLLSAI1_R) = f(VCOSAI1 clock) / PLLSAI1R

31	30	29	28	27	26	25	24	23	22	21	20	19	18	17	16
PLLSAI1PDIV[4:0]					PLLSAI1R[1:0]		PLL SAI1 REN	Res.	PLLSAI1Q[1:0]		PLL SAI1 QEN	Res.	Res.	PLL SAI1P	PLL SAI1 PEN
rw	rw	rw	rw	rw	rw	rw	rw		rw	rw	rw			rw	rw

15	14	13	12	11	10	9	8	7	6	5	4	3	2	1	0
Res.	PLLSAI1N[6:0]							Res.	Res.	Res.	Res.	Res.	Res.	Res.	Res.
	rw	rw	rw	rw	rw	rw	rw								

Bits 31:27 **PLLSAI1PDIV[4:0]**: PLLSAI1 division factor for PLLSAI1CLK (only on STM32L49x/L4Ax devices)

Set and cleared by software to control the SAI1 or SAI2 clock frequency. PLLSAI1CLK output clock frequency = VCOSAI1 frequency / PLLPDIV.

00000: PLLSAI1CLK is controlled by the bit PLLP
00001: Reserved.
00010: PLLSAI1CLK = VCOSAI1 / 2
....
11111: PLLSAI1CLK = VCOSAI1 / 31

Bits 26:25 **PLLSAI1R[1:0]**: PLLSAI1 division factor for PLLADC1CLK (ADC clock)

Set and cleared by software to control the frequency of the PLLSAI1 output clock PLLADC1CLK. This output can be selected as ADC clock. These bits can be written only if PLLSAI1 is disabled.

PLLADC1CLK output clock frequency = VCOSAI1 frequency / PLLSAI1R with PLLSAI1R = 2, 4, 6, or 8

00: PLLSAI1R = 2
01: PLLSAI1R = 4
10: PLLSAI1R = 6
11: PLLSAI1R = 8

Bit 24 **PLLSAI1REN**: PLLSAI1 PLLADC1CLK output enable

Set and reset by software to enable the PLLADC1CLK output of the PLLSAI1 (used as clock for ADC).

In order to save power, when the PLLADC1CLK output of the PLLSAI1 is not used, the value of PLLSAI1REN should be 0.

0: PLLADC1CLK output disable
1: PLLADC1CLK output enable

Bit 23 Reserved, must be kept at reset value.

Bits 22:21 **PLLSAI1Q[1:0]**: PLLSAI1 division factor for PLL48M2CLK (48 MHz clock)

Set and cleared by software to control the frequency of the PLLSAI1 output clock PLL48M2CLK. This output can be selected for USB, RNG, SDMMC (48 MHz clock). These bits can be written only if PLLSAI1 is disabled.

PLL48M2CLK output clock frequency = VCOSAI1 frequency / PLLQ with PLLQ = 2, 4, 6, or 8

00: PLLQ = 2
01: PLLQ = 4
10: PLLQ = 6
11: PLLQ = 8

Caution: The software has to set these bits correctly not to exceed 80 MHz on this domain.

Bit 20 **PLLSAI1QEN**: PLLSAI1 PLL48M2CLK output enable

Set and reset by software to enable the PLL48M2CLK output of the PLLSAI1.

In order to save power, when the PLL48M2CLK output of the PLLSAI1 is not used, the value of PLLSAI1QEN should be 0.

0: PLL48M2CLK output disable
1: PLL48M2CLK output enable

Bits 19:18 Reserved, must be kept at reset value.

Bit 17 **PLLSAI1P**: PLLSAI1 division factor for PLLSAI1CLK (SAI1 or SAI2 clock).

Set and cleared by software to control the frequency of the PLLSAI1 output clock PLLSAI1CLK. This output can be selected for SAI1 or SAI2. These bits can be written only if PLLSAI1 is disabled.

For STM32L49x/L4Ax devices:

If PLLSAI1PDIV[4:0] is set to “00000”:

PLLSAI1CLK output clock frequency = VCOSAI1 frequency / PLLSAI1P with PLLSAI1P = 7 or 17

If PLLSAI1PDIV[4:0] is different than “00000”:

PLLSAI1P has no effect

For STM32L47x/L48x devices:

PLLSAI1CLK output clock frequency = VCOSAI1 frequency / PLLSAI1P with PLLSAI1P = 7 or 17

0: PLLSAI1P = 7
1: PLLSAI1P = 17

Bit 16 **PLLSAI1PEN**: PLLSAI1 PLLSAI1CLK output enable

Set and reset by software to enable the PLLSAI1CLK output of the PLLSAI1.
In order to save power, when the PLLSAI1CLK output of the PLLSAI1 is not used, the value of PLLSAI1PEN should be 0.
0: PLLSAI1CLK output disable
1: PLLSAI1CLK output enable

Bit 15 Reserved, must be kept at reset value.

Bits 14:8 **PLLSAI1N[6:0]**: PLLSAI1 multiplication factor for VCO

Set and cleared by software to control the multiplication factor of the VCO. These bits can be written only when the PLLSAI1 is disabled.
VCOSAI1 output frequency = VCOSAI1 input frequency x PLLSAI1N
with 8 =< PLLSAI1N =< 86
0000000: PLLSAI1N = 0 wrong configuration
0000001: PLLSAI1N = 1 wrong configuration
...
0000111: PLLSAI1N = 7 wrong configuration
0001000: PLLSAI1N = 8
0001001: PLLSAI1N = 9
...
1010101: PLLSAI1N = 85
1010110: PLLSAI1N = 86
1010111: PLLSAI1N = 87 wrong configuration
...
1111111: PLLSAI1N = 127 wrong configuration

Caution: The software has to set correctly these bits to ensure that the VCO output frequency is between 64 and 344 MHz.

Bits 7:0 Reserved, must be kept at reset value.

6.4.6 PLLSAI2 configuration register (RCC_PLLSAI2CFGR)

Address offset: 0x14

Reset value: 0x0000 1000

Access: no wait state, word, half-word and byte access

This register is used to configure the PLLSAI2 clock outputs according to the formulas:

- f(VCOSAI2 clock) = f(PLL clock input) × (PLLSAI2N / PLLM)
- f(PLLSAI2_P) = f(VCOSAI2 clock) / PLLSAI2P
- f(PLLSAI2_R) = f(VCOSAI2 clock) / PLLSAI2R

31	30	29	28	27	26	25	24	23	22	21	20	19	18	17	16
PLLSAI2PDIV[4:0]					PLLSAI2R[1:0]		PLL SAI2 REN	Res.	Res.	Res.	Res.	Res.	Res.	PLL SAI2P	PLL SAI2 PEN
rw	rw	rw	rw	rw	rw	rw	rw							rw	rw

15	14	13	12	11	10	9	8	7	6	5	4	3	2	1	0
Res.	PLLSAI2N[6:0]							Res.	Res.	Res.	Res.	Res.	Res.	Res.	Res.
	rw	rw	rw	rw	rw	rw	rw								

Bits 31:27 **PLLSAI2PDIV[4:0]**: PLLSAI2 division factor for PLLSAI2CLK (only on STM32L49x/L4Ax devices)

Set and cleared by software to control the SAI1 or SAI2 clock frequency. PLLSAI2CLK output clock

frequency = VCOSAI2 frequency / PLLSAI2PDIV.

00000: PLLSAI2CLK is controlled by the bit PLLSAI2P

00001: Reserved.

00010: PLLSAI2CLK = VCOSAI2 / 2

....

11111: PLLSAI2CLK = VCOSAI2 / 31

Bits 26:25 **PLLSAI2R[1:0]**: PLLSAI2 division factor for PLLADC2CLK (ADC clock)

Set and cleared by software to control the frequency of the PLLSAI2 output clock PLLADC2CLK. This output can be selected as ADC clock. These bits can be written only if PLLSAI2 is disabled.

PLLADC2CLK output clock frequency = VCOSAI2 frequency / PLLSAI2R with PLLSAI2R = 2, 4, 6, or 8

00: PLLSAI2R = 2

01: PLLSAI2R = 4

10: PLLSAI2R = 6

11: PLLSAI2R = 8

Bit 24 **PLLSAI2REN**: PLLSAI2 PLLADC2CLK output enable

Set and reset by software to enable the PLLADC2CLK output of the PLLSAI2 (used as clock for ADC).

In order to save power, when the PLLADC2CLK output of the PLLSAI2 is not used, the value of PLLSAI2REN should be 0.

0: PLLADC2CLK output disable

1: PLLADC2CLK output enable

Bits 23:18 Reserved, must be kept at reset value.

Bit 17 **PLLSAI2P**: PLLSAI2 division factor for PLLSAI2CLK (SAI1 or SAI2 clock).

Set and cleared by software to control the frequency of the PLLSAI2 output clock PLLSAI2CLK. This output can be selected for SAI1 or SAI2. These bits can be written only if PLLSAI2 is disabled.

For STM32L49x/L4Ax devices:

If PLLSAI2PDIV[4:0] is set to “00000”:

PLLSAI2CLK output clock frequency = VCOSAI2 frequency / PLLSAI2P with PLLSAI2P = 7 or 17

If PLLSAI2PDIV[4:0] is different than “00000”:

PLLSAI2P has no effect

For STM32L47x/L48x devices:

PLLSAI2CLK output clock frequency = VCOSAI2 frequency / PLLSAI2P with PLLSAI2P = 7 or 17

0: PLLSAI2P = 7
1: PLLSAI2P = 17

Bit 16 **PLLSAI2PEN**: PLLSAI2 PLLSAI2CLK output enable

Set and reset by software to enable the PLLSAI2CLK output of the PLLSAI2.
In order to save power, when the PLLSAI2CLK output of the PLLSAI2 is not used, the value of PLLSAI2PEN should be 0.
0: PLLSAI2CLK output disable
1: PLLSAI2CLK output enable

Bit 15 Reserved, must be kept at reset value.

Bits 14:8 **PLLSAI2N[6:0]**: PLLSAI2 multiplication factor for VCO

Set and cleared by software to control the multiplication factor of the VCO. These bits can be written only when the PLLSAI2 is disabled.
VCOSAI2 output frequency = VCOSAI2 input frequency x PLLSAI2N
with 8 =< PLLSAI2N =< 86
0000000: PLLSAI2N = 0 wrong configuration
0000001: PLLSAI2N = 1 wrong configuration
...
0000111: PLLSAI2N = 7 wrong configuration
0001000: PLLSAI2N = 8
0001001: PLLSAI2N = 9
...
1010101: PLLSAI2N = 85
1010110: PLLSAI2N = 86
1010111: PLLSAI2N = 87 wrong configuration
...
1111111: PLLSAI2N = 127 wrong configuration

Caution: The software has to set correctly these bits to ensure that the VCO output frequency is between 64 and 344 MHz.

Bits 7:0 Reserved, must be kept at reset value.

6.4.7 Clock interrupt enable register (RCC_CIER)

Address offset: 0x18

Reset value: 0x0000 0000

Access: no wait state, word, half-word and byte access

31	30	29	28	27	26	25	24	23	22	21	20	19	18	17	16
Res.	Res.	Res.	Res.	Res.	Res.	Res.	Res.	Res.	Res.	Res.	Res.	Res.	Res.	Res.	Res.

15	14	13	12	11	10	9	8	7	6	5	4	3	2	1	0
Res.	Res.	Res.	Res.	Res.	HSI48 RDYIE	LSE CSSIE	Res.	PLL SAI2 RDYIE	PLL SAI1 RDYIE	PLL RDYIE	HSE RDYIE	HSI RDYIE	MSI RDYIE	LSE RDYIE	LSI RDYIE
					rw	rw		rw	rw	rw	rw	rw	rw	rw	rw

Bits 31:11 Reserved, must be kept at reset value.

Bit 10 **HSI48RDYIE**: HSI48 ready interrupt enable (only on STM32L49x/L4Ax devices)

Set and cleared by software to enable/disable interrupt caused by the internal HSI48 oscillator.

0: HSI48 ready interrupt disabled

1: HSI48 ready interrupt enabled

Bit 9 **LSECSSIE**: LSE clock security system interrupt enable

Set and cleared by software to enable/disable interrupt caused by the clock security system on LSE.

0: Clock security interrupt caused by LSE clock failure disabled

1: Clock security interrupt caused by LSE clock failure enabled

Bit 8 Reserved, must be kept at reset value.

Bit 7 **PLLSAI2RDYIE**: PLLSAI2 ready interrupt enable

Set and cleared by software to enable/disable interrupt caused by PLLSAI2 lock.

0: PLLSAI2 lock interrupt disabled

1: PLLSAI2 lock interrupt enabled

Bit 6 **PLLSAI1RDYIE**: PLLSAI1 ready interrupt enable

Set and cleared by software to enable/disable interrupt caused by PLSAI1L lock.

0: PLLSAI1 lock interrupt disabled

1: PLLSAI1 lock interrupt enabled

Bit 5 **PLLRDYIE**: PLL ready interrupt enable

Set and cleared by software to enable/disable interrupt caused by PLL lock.

0: PLL lock interrupt disabled

1: PLL lock interrupt enabled

Bit 4 **HSERDYIE**: HSE ready interrupt enable

Set and cleared by software to enable/disable interrupt caused by the HSE oscillator stabilization.

0: HSE ready interrupt disabled

1: HSE ready interrupt enabled

Bit 3 **HSIRDYIE**: HSI16 ready interrupt enable

Set and cleared by software to enable/disable interrupt caused by the HSI16 oscillator stabilization.

0: HSI16 ready interrupt disabled

1: HSI16 ready interrupt enabled

Bit 2 **MSIRDYIE**: MSI ready interrupt enable

Set and cleared by software to enable/disable interrupt caused by the MSI oscillator stabilization.
0: MSI ready interrupt disabled
1: MSI ready interrupt enabled

Bit 1 **LSERDYIE**: LSE ready interrupt enable

Set and cleared by software to enable/disable interrupt caused by the LSE oscillator stabilization.
0: LSE ready interrupt disabled
1: LSE ready interrupt enabled

Bit 0 **LSIRDYIE**: LSI ready interrupt enable

Set and cleared by software to enable/disable interrupt caused by the LSI oscillator stabilization.
0: LSI ready interrupt disabled
1: LSI ready interrupt enabled

6.4.8 Clock interrupt flag register (RCC_CIFR)

Address offset: 0x1C

Reset value: 0x0000 0000

Access: no wait state, word, half-word and byte access

31	30	29	28	27	26	25	24	23	22	21	20	19	18	17	16
Res.	Res.	Res.	Res.	Res.	Res.	Res.	Res.	Res.	Res.	Res.	Res.	Res.	Res.	Res.	Res.
15	**14**	**13**	**12**	**11**	**10**	**9**	**8**	**7**	**6**	**5**	**4**	**3**	**2**	**1**	**0**
Res.	Res.	Res.	Res.	Res.	HSI48 RDYF	LSE CSSF	CSSF	PLLSAI 2RDYF	PLLSAI 1RDYF	PLL RDYF	HSE RDYF	HSI RDYF	MSI RDYF	LSE RDYF	LSI RDYF
					r	r	r	r	r	r	r	r	r	r	r

Bits 31:11 Reserved, must be kept at reset value.

Bit 10 **HSI48RDYF**: HSI48 ready interrupt flag (only on STM32L49x/L4Ax devices)

Set by hardware when the HSI48 clock becomes stable and HSI48RDYIE is set in a response to setting the HSI48ON (refer to *Clock recovery RC register (RCC_CRRCR)*).
Cleared by software setting the HSI48RDYC bit.
0: No clock ready interrupt caused by the HSI48 oscillator
1: Clock ready interrupt caused by the HSI48 oscillator

Bit 9 **LSECSSF**: LSE Clock security system interrupt flag

Set by hardware when a failure is detected in the LSE oscillator.
Cleared by software setting the LSECSSC bit.
0: No clock security interrupt caused by LSE clock failure
1: Clock security interrupt caused by LSE clock failure

Bit 8 **CSSF**: Clock security system interrupt flag

Set by hardware when a failure is detected in the HSE oscillator.
Cleared by software setting the CSSC bit.
0: No clock security interrupt caused by HSE clock failure
1: Clock security interrupt caused by HSE clock failure

Bit 7 **PLLSAI2RDYF**: PLLSAI2 ready interrupt flag
Set by hardware when the PLLSAI2 locks and PLLSAI2RDYDIE is set.
Cleared by software setting the PLLSAI2RDYC bit.
0: No clock ready interrupt caused by PLLSAI2 lock
1: Clock ready interrupt caused by PLLSAI2 lock

Bit 6 **PLLSAI1RDYF**: PLLSAI1 ready interrupt flag
Set by hardware when the PLLSAI1 locks and PLLSAI1RDYDIE is set.
Cleared by software setting the PLLSAI1RDYC bit.
0: No clock ready interrupt caused by PLLSAI1 lock
1: Clock ready interrupt caused by PLLSAI1 lock

Bit 5 **PLLRDYF**: PLL ready interrupt flag
Set by hardware when the PLL locks and PLLRDYDIE is set.
Cleared by software setting the PLLRDYC bit.
0: No clock ready interrupt caused by PLL lock
1: Clock ready interrupt caused by PLL lock

Bit 4 **HSERDYF**: HSE ready interrupt flag
Set by hardware when the HSE clock becomes stable and HSERDYDIE is set.
Cleared by software setting the HSERDYC bit.
0: No clock ready interrupt caused by the HSE oscillator
1: Clock ready interrupt caused by the HSE oscillator

Bit 3 **HSIRDYF**: HSI16 ready interrupt flag
Set by hardware when the HSI16 clock becomes stable and HSIRDYDIE is set in a response to setting the HSION (refer to *Clock control register (RCC_CR)*). When HSION is not set but the HSI16 oscillator is enabled by the peripheral through a clock request, this bit is not set and no interrupt is generated.
Cleared by software setting the HSIRDYC bit.
0: No clock ready interrupt caused by the HSI16 oscillator
1: Clock ready interrupt caused by the HSI16 oscillator

Bit 2 **MSIRDYF**: MSI ready interrupt flag
Set by hardware when the MSI clock becomes stable and MSIRDYDIE is set.
Cleared by software setting the MSIRDYC bit.
0: No clock ready interrupt caused by the MSI oscillator
1: Clock ready interrupt caused by the MSI oscillator

Bit 1 **LSERDYF**: LSE ready interrupt flag
Set by hardware when the LSE clock becomes stable and LSERDYDIE is set.
Cleared by software setting the LSERDYC bit.
0: No clock ready interrupt caused by the LSE oscillator
1: Clock ready interrupt caused by the LSE oscillator

Bit 0 **LSIRDYF**: LSI ready interrupt flag
Set by hardware when the LSI clock becomes stable and LSIRDYDIE is set.
Cleared by software setting the LSIRDYC bit.
0: No clock ready interrupt caused by the LSI oscillator
1: Clock ready interrupt caused by the LSI oscillator

6.4.9 Clock interrupt clear register (RCC_CICR)

Address offset: 0x20

Reset value: 0x0000 0000

Access: no wait state, word, half-word and byte access

31	30	29	28	27	26	25	24	23	22	21	20	19	18	17	16
Res.	Res.	Res.	Res.	Res.	Res.	Res.	Res.	Res.	Res.	Res.	Res.	Res.	Res.	Res.	Res.
15	14	13	12	11	10	9	8	7	6	5	4	3	2	1	0
Res.	Res.	Res.	Res.	Res.	HSI48 RDYC	LSE CSSC	CSSC	PLLSAI 2RDYC	PLL SAI1 RDYC	PLL RDYC	HSE RDYC	HSI RDYC	MSI RDYC	LSE RDYC	LSI RDYC
					w	w	w	w	w	w	w	w	w	w	w

Bits 31:11 Reserved, must be kept at reset value.

Bit 10 **HSI48RDYC**: HSI48 oscillator ready interrupt clear (only on STM32L49x/L4Ax devices)
This bit is set by software to clear the HSI48RDYF flag.
0: No effect
1: Clear the HSI48RDYC flag

Bit 9 **LSECSSC**: LSE Clock security system interrupt clear
This bit is set by software to clear the LSECSSF flag.
0: No effect
1: Clear LSECSSF flag

Bit 8 **CSSC**: Clock security system interrupt clear
This bit is set by software to clear the CSSF flag.
0: No effect
1: Clear CSSF flag

Bit 7 **PLLSAI2RDYC**: PLLSAI2 ready interrupt clear
This bit is set by software to clear the PLLSAI2RDYF flag.
0: No effect
1: Clear PLLSAI2RDYF flag

Bit 6 **PLLSAI1RDYC**: PLLSAI1 ready interrupt clear
This bit is set by software to clear the PLLSAI1RDYF flag.
0: No effect
1: Clear PLLSAI1RDYF flag

Bit 5 **PLLRDYC**: PLL ready interrupt clear
This bit is set by software to clear the PLLRDYF flag.
0: No effect
1: Clear PLLRDYF flag

Bit 4 **HSERDYC**: HSE ready interrupt clear
This bit is set by software to clear the HSERDYF flag.
0: No effect
1: Clear HSERDYF flag

Bit 3 **HSIRDYC**: HSI16 ready interrupt clear
This bit is set software to clear the HSIRDYF flag.
0: No effect
1: Clear HSIRDYF flag

Bit 2 **MSIRDYC**: MSI ready interrupt clear
This bit is set by software to clear the MSIRDYF flag.
0: No effect
1: MSIRDYF cleared

Bit 1 **LSERDYC**: LSE ready interrupt clear
This bit is set by software to clear the LSERDYF flag.
0: No effect
1: LSERDYF cleared

Bit 0 **LSIRDYC**: LSI ready interrupt clear
This bit is set by software to clear the LSIRDYF flag.
0: No effect
1: LSIRDYF cleared

6.4.10 AHB1 peripheral reset register (RCC_AHB1RSTR)

Address offset: 0x28

Reset value: 0x00000 0000

Access: no wait state, word, half-word and byte access

31	30	29	28	27	26	25	24	23	22	21	20	19	18	17	16
Res.	Res.	Res.	Res.	Res.	Res.	Res.	Res.	Res.	Res.	Res.	Res.	Res.	Res.	DMA2 DRST	TSC RST
														rw	rw
15	14	13	12	11	10	9	8	7	6	5	4	3	2	1	0
Res.	Res.	Res.	CRC RST	Res.	Res.	Res.	FLASH RST	Res.	Res.	Res.	Res.	Res.	Res.	DMA2 RST	DMA1 RST
			rw				rw							rw	rw

Bits 31:1817 Reserved, must be kept at reset value.

Bit 17 **DMA2DRST**: DMA2D reset (this bit is reserved for STM32L47x/L48x devices)
Set and cleared by software
0: No effect
1: Reset DMA2D

Bit 16 **TSCRST**: Touch Sensing Controller reset
Set and cleared by software.
0: No effect
1: Reset TSC

Bits 15:13 Reserved, must be kept at reset value.

Bit 12 **CRCRST**: CRC reset
Set and cleared by software.
0: No effect
1: Reset CRC

Bits 11:9 Reserved, must be kept at reset value.

Bit 8 **FLASHRST**: Flash memory interface reset
Set and cleared by software. This bit can be activated only when the Flash memory is in power down mode.
0: No effect
1: Reset Flash memory interface

Bits 7:2 Reserved, must be kept at reset value.

Bit 1 **DMA2RST**: DMA2 reset
Set and cleared by software.
0: No effect
1: Reset DMA2

Bit 0 **DMA1RST**: DMA1 reset
Set and cleared by software.
0: No effect
1: Reset DMA1

6.4.11 AHB2 peripheral reset register (RCC_AHB2RSTR)

Address offset: 0x2C

Reset value: 0x00000 0000

Access: no wait state, word, half-word and byte access

31	30	29	28	27	26	25	24	23	22	21	20	19	18	17	16
Res.	Res.	Res.	Res.	Res.	Res.	Res.	Res.	Res.	Res.	Res.	Res.	Res.	RNG RST	HASH RST	AES RST
													rw	rw	rw

15	14	13	12	11	10	9	8	7	6	5	4	3	2	1	0
Res.	DCMIRST	ADC RST	OTGFS RST	Res.	Res.	Res.	GPIOIR ST	GPIOH RST	GPIOG RST	GPIOF RST	GPIOE RST	GPIOD RST	GPIOC RST	GPIOB RST	GPIOA RST
	rw	rw	rw				rw	rw	rw	rw	rw	rw	rw	rw	rw

Bits 31:19 Reserved, must be kept at reset value.

Bit 18 **RNGRST**: Random number generator reset
Set and cleared by software.
0: No effect
1: Reset RNG

Bit 17 **HASHRST:** Hash reset (this bit is reserved for STM32L47x/L48x devices)
Set and cleared by software.
0: No effect
1: Reset HASH

Bit 16 **AESRST**: AES hardware accelerator reset (this bit is reserved on STM32L47x/L49x devices).
Set and cleared by software.
0: No effect
1: Reset AES

Bit 15 Reserved, must be kept at reset value.

Bit 14 **DCMIRST**: Digital Camera Interface reset (this bit is reserved for STM32L47x/L48x devices)
Set and cleared by software
0: No effect
1: Reset DCMI interface

Bit 13 **ADCRST**: ADC reset
Set and cleared by software.
0: No effect
1: Reset ADC interface

Bit 12 **OTGFSRST**: USB OTG FS reset (this bit is reserved for STM32L471 devices)
Set and cleared by software.
0: No effect
1: Reset USB OTG FS

Bits 11:9 Reserved, must be kept at reset value.

Bit 8 **GPIOIRST**: IO port I reset (this bit is reserved for STM32L47x/L48x devices)
Set and cleared by software
0: No effect
1: Reset IO port I

Bit 7 **GPIOHRST**: IO port H reset
Set and cleared by software.
0: No effect
1: Reset IO port H

Bit 6 **GPIOGRST**: IO port G reset
Set and cleared by software.
0: No effect
1: Reset IO port G

Bit 5 **GPIOFRST**: IO port F reset
Set and cleared by software.
0: No effect
1: Reset IO port F

Bit 4 **GPIOERST**: IO port E reset
Set and cleared by software.
0: No effect
1: Reset IO port E

Bit 3 **GPIODRST**: IO port D reset
Set and cleared by software.
0: No effect
1: Reset IO port D

Bit 2 **GPIOCRST**: IO port C reset
Set and cleared by software.
0: No effect
1: Reset IO port C

Bit 1 **GPIOBRST**: IO port B reset
Set and cleared by software.
0: No effect
1: Reset IO port B

Bit 0 **GPIOARST**: IO port A reset
Set and cleared by software.
0: No effect
1: Reset IO port A

6.4.12 AHB3 peripheral reset register (RCC_AHB3RSTR)

Address offset: 0x30

Reset value: 0x00000 0000

Access: no wait state, word, half-word and byte access

31	30	29	28	27	26	25	24	23	22	21	20	19	18	17	16
Res.	Res.	Res.	Res.	Res.	Res.	Res.	Res.	Res.	Res.	Res.	Res.	Res.	Res.	Res.	Res.
15	14	13	12	11	10	9	8	7	6	5	4	3	2	1	0
Res.	Res.	Res.	Res.	Res.	Res.	Res.	QSPI RST	Res.	Res.	Res.	Res.	Res.	Res.	Res.	FMC RST
							rw								rw

Bits 31:9 Reserved, must be kept at reset value.

Bit 8 **QSPIRST**: QUADSPI1 memory interface reset
Set and cleared by software.
0: No effect
1: Reset QUADSPI

Bits 7:1 Reserved, must be kept at reset value.

Bit 0 **FMCRST**: Flexible memory controller reset
Set and cleared by software.
0: No effect
1: Reset FMC

6.4.13 APB1 peripheral reset register 1 (RCC_APB1RSTR1)

Address offset: 0x38

Reset value: 0x0000 0000

Access: no wait state, word, half-word and byte access

31	30	29	28	27	26	25	24	23	22	21	20	19	18	17	16
LPTIM1 RST	OPAMP RST	DAC1 RST	PWR RST	Res.	CAN2R ST	CAN1 RST	CRSRS T	I2C3R ST	I2C2 RST	I2C1 RST	UART5 RST	UART4 RST	USART3 RST	USART2 RST	Res.
rw	rw	rw	rw		rw	rw		rw	rw	rw	rw	rw	rw	rw	
15	14	13	12	11	10	9	8	7	6	5	4	3	2	1	0
SPI3 RST	SPI2 RST	Res.	Res.	Res.	Res.	LCD RST	Res.	Res.	Res.	TIM7 RST	TIM6 RST	TIM5 RST	TIM4 RST	TIM3 RST	TIM2 RST
rw	rw					rw				rw	rw	rw	rw	rw	rw

Bit 31 **LPTIM1RST**: Low Power Timer 1 reset
Set and cleared by software.
0: No effect
1: Reset LPTIM1

Bit 30 **OPAMPRST**: OPAMP interface reset
Set and cleared by software.
0: No effect
1: Reset OPAMP interface

Bit 29 **DAC1RST**: DAC1 interface reset
Set and cleared by software.
0: No effect
1: Reset DAC1 interface

Bit 28 **PWRRST**: Power interface reset
Set and cleared by software.
0: No effect
1: Reset PWR

Bit 27 Reserved, must be kept at reset value.

Bit 26 **CAN2RST**: CAN2 reset (this bit is reserved for STM32L47x/L48x devices)
Set and cleared by software
0: No effect
1: Reset CAN2

Bit 25 **CAN1RST**: CAN1 reset
Set and reset by software.
0: No effect
1: Reset the CAN1

Bit 24 **CRSRST**: CRS reset (this bit is reserved for STM32L47x/L48x devices)
Set and cleared by software.
0: No effect
1: Reset the CRS

Bit 23 **I2C3RST**: I2C3 reset
Set and reset by software.
0: No effect
1: Reset I2C3

Bit 22 **I2C2RST**: I2C2 reset
Set and cleared by software.
0: No effect
1: Reset I2C2

Bit 21 **I2C1RST**: I2C1 reset
Set and cleared by software.
0: No effect
1: Reset I2C1

Bit 20 **UART5RST**: UART5 reset
Set and cleared by software.
0: No effect
1: Reset UART5

Bit 19 **UART4RST**: UART4 reset
Set and cleared by software.
0: No effect
1: Reset UART4

Bit 18 **USART3RST**: USART3 reset
Set and cleared by software.
0: No effect
1: Reset USART3

Bit 17 **USART2RST**: USART2 reset
Set and cleared by software.
0: No effect
1: Reset USART2

Bit 16 Reserved, must be kept at reset value.

Bit 15 **SPI3RST**: SPI3 reset
Set and cleared by software.
0: No effect
1: Reset SPI3

Bit 14 **SPI2RST**: SPI2 reset
Set and cleared by software.
0: No effect
1: Reset SPI2

Bits 13:10 Reserved, must be kept at reset value.

Bit 9 **LCDRST**: LCD interface reset (this bit is reserved for STM32L471/L4x5 devices)
Set and cleared by software.
0: No effect
1: Reset LCD

Bits 8:6 Reserved, must be kept at reset value.

Bit 5 **TIM7RST**: TIM7 timer reset
Set and cleared by software.
0: No effect
1: Reset TIM7

Bit 4 **TIM6RST**: TIM6 timer reset
Set and cleared by software.
0: No effect
1: Reset TIM6

Bit 3 **TIM5RST**: TIM5 timer reset
Set and cleared by software.
0: No effect
1: Reset TIM5

Bit 2 **TIM4RST**: TIM3 timer reset
Set and cleared by software.
0: No effect
1: Reset TIM3

Bit 1 **TIM3RST**: TIM3 timer reset
Set and cleared by software.
0: No effect
1: Reset TIM3

Bit 0 **TIM2RST**: TIM2 timer reset
Set and cleared by software.
0: No effect
1: Reset TIM2

6.4.14 APB1 peripheral reset register 2 (RCC_APB1RSTR2)

Address offset: 0x3C

Reset value: 0x00000 0000

Access: no wait state, word, half-word and byte access

31	30	29	28	27	26	25	24	23	22	21	20	19	18	17	16
Res.	Res.	Res.	Res.	Res.	Res.	Res.	Res.	Res.	Res.	Res.	Res.	Res.	Res.	Res.	Res.

15	14	13	12	11	10	9	8	7	6	5	4	3	2	1	0
Res.	Res.	Res.	Res.	Res.	Res.	Res.	Res.	Res.	Res.	LPTIM2 RST	Res.	Res.	SWP MI1 RST	I2C4 RST	LP UART1 RST
										rw			rw	rw	rw

Bits 31:6 Reserved, must be kept at reset value.

Bit 5 **LPTIM2RST**: Low-power timer 2 reset
Set and cleared by software.
0: No effect
1: Reset LPTIM2

Bits 4:3 Reserved, must be kept at reset value.

Bit 2 **SWPMI1RST**: Single wire protocol reset
Set and cleared by software.
0: No effect
1: Reset SWPMI1

Bit 1 **I2C4RST**: I2C4 reset (this bit is reserved for STM32L47x/L48x devices)
Set and cleared by software
0: No effect
1: Reset I2C4

Bit 0 **LPUART1RST**: Low-power UART 1 reset
Set and cleared by software.
0: No effect
1: Reset LPUART1

6.4.15 APB2 peripheral reset register (RCC_APB2RSTR)

Address offset: 0x40

Reset value: 0x00000 0000

Access: no wait state, word, half-word and byte access

31	30	29	28	27	26	25	24	23	22	21	20	19	18	17	16
Res.	Res.	Res.	Res.	Res.	:Res.	Res.	DFSDM1 RST	Res.	SAI2 RST	SAI1 RST	Res.	Res.	TIM17 RST	TIM16 RST	TIM15 RST
							rw		rw	rw			rw	rw	rw

15	14	13	12	11	10	9	8	7	6	5	4	3	2	1	0
Res.	USART1 RST	TIM8 RST	SPI1 RST	TIM1 RST	SD MMC1 RST	Res.	Res.	Res.	Res.	Res.	Res.	Res.	Res.	Res.	SYS CFG RST
	rw	rw	rw	rw	rw										rw

Bits 31:25 Reserved, must be kept at reset value.

Bit 24 **DFSDM1RST**: Digital filters for sigma-delta modulators (DFSDM1) reset
Set and cleared by software.
0: No effect
1: Reset DFSDM1

Bit 23 Reserved, must be kept at reset value.

Bit 22 **SAI2RST**: Serial audio interface 2 (SAI2) reset
Set and cleared by software.
0: No effect
1: Reset SAI2

Bit 21 **SAI1RST**: Serial audio interface 1 (SAI1) reset
Set and cleared by software.
0: No effect
1: Reset SAI1

Bits 20:19 Reserved, must be kept at reset value.

Bit 18 **TIM17RST**: TIM17 timer reset
Set and cleared by software.
0: No effect
1: Reset TIM17 timer

Bit 17 **TIM16RST**: TIM16 timer reset
Set and cleared by software.
0: No effect
1: Reset TIM16 timer

Bit 16 **TIM15RST**: TIM15 timer reset
Set and cleared by software.
0: No effect
1: Reset TIM15 timer

Bit 15 Reserved, must be kept at reset value.

Bit 14 **USART1RST**: USART1 reset
Set and cleared by software.
0: No effect
1: Reset USART1

Bit 13 **TIM8RST**: TIM8 timer reset
Set and cleared by software.
0: No effect
1: Reset TIM8 timer

Bit 12 **SPI1RST**: SPI1 reset
Set and cleared by software.
0: No effect
1: Reset SPI1

Bit 11 **TIM1RST**: TIM1 timer reset
Set and cleared by software.
0: No effect
1: Reset TIM1 timer

Bit 10 **SDMMC1RST**: SDMMC reset
Set and cleared by software.
0: No effect
1: Reset SDMMC

Bits 9:1 Reserved, must be kept at reset value.

Bit 0 **SYSCFGRST**: SYSCFG + COMP + VREFBUF reset
0: No effect
1: Reset SYSCFG + COMP + VREFBUF

6.4.16 AHB1 peripheral clock enable register (RCC_AHB1ENR)

Address offset: 0x48

Reset value: 0x0000 0100

Access: no wait state, word, half-word and byte access

Note: When the peripheral clock is not active, the peripheral registers read or write access is not supported.

31	30	29	28	27	26	25	24	23	22	21	20	19	18	17	16
Res.	Res.	Res.	Res.	Res.	Res.	Res.	Res.	Res.	Res.	Res.	Res.	Res.	Res.	DMA2DEN	TSCEN
														rw	rw
15	14	13	12	11	10	9	8	7	6	5	4	3	2	1	0
Res.	Res.	Res.	CRCEN	Res.	Res.	Res.	FLASHEN	Res.	Res.	Res.	Res.	Res.	Res.	DMA2EN	DMA1EN
			rw				rw							rw	rw

Bits 31:18 Reserved, must be kept at reset value.

Bit 17 **DMA2DEN**: DMA2D clock enable (this bit is reserved for STM32L47x/L48x devices)

Set and cleared by software
0: DMA2D clock disabled
1: DMA2D clock enabled

Bit 16 **TSCEN**: Touch Sensing Controller clock enable

Set and cleared by software.
0: TSC clock disable
1: TSC clock enable

Bits 15:13 Reserved, must be kept at reset value.

Bit 12 **CRCEN**: CRC clock enable

Set and cleared by software.
0: CRC clock disable
1: CRC clock enable

Bits 11:9 Reserved, must be kept at reset value.

Bit 8 **FLASHEN**: Flash memory interface clock enable

Set and cleared by software. This bit can be disabled only when the Flash is in power down mode.
0: Flash memory interface clock disable
1: Flash memory interface clock enable

Bits 7:2 Reserved, must be kept at reset value.

Bit 1 **DMA2EN**: DMA2 clock enable

Set and cleared by software.
0: DMA2 clock disable
1: DMA2 clock enable

Bit 0 **DMA1EN**: DMA1 clock enable

Set and cleared by software.
0: DMA1 clock disable
1: DMA1 clock enable

6.4.17 AHB2 peripheral clock enable register (RCC_AHB2ENR)

Address offset: 0x4C

Reset value: 0x0000 0000

Access: no wait state, word, half-word and byte access

Note: When the peripheral clock is not active, the peripheral registers read or write access is not supported.

31	30	29	28	27	26	25	24	23	22	21	20	19	18	17	16
Res.	Res.	Res.	Res.	Res.	Res.	Res.	Res.	Res.	Res.	Res.	Res.	Res.	RNG EN	HASHE N	AESEN
													rw	rw	rw

15	14	13	12	11	10	9	8	7	6	5	4	3	2	1	0
Res.	DCMIE N	ADCEN	OTGFS EN	Res.	Res.	Res.	GPIOIE N	GPIOH EN	GPIOG EN	GPIOF EN	GPIOE EN	GPIOD EN	GPIOC EN	GPIOB EN	GPIOA EN
	rw	rw	rw				rw	rw	rw	rw	rw	rw	rw	rw	rw

Bits 31:19 Reserved, must be kept at reset value.

Bit 18 **RNGEN:** Random Number Generator clock enable
Set and cleared by software.
0: Random Number Generator clock disabled
1: Random Number Generator clock enabled

Bit 17 **HASHEN**: HASH clock enable (this bit is reserved for STM32L47x/L48x devices)
Set and cleared by software
0: HASH clock disabled
1: HASH clock enabled

Bit 16 **AESEN:** AES accelerator clock enable (this bit is reserved on STM32L47x/L49x devices)
Set and cleared by software.
0: AES clock disabled
1: AES clock enabled

Bit 15 Reserved, must be kept at reset value.

Bit 14 **DCMIEN**: DCMI clock enable (this bit is reserved for STM32L47x/L48x devices)
Set and cleared by software
0: DCMI clock disabled
1: DCMI clock enabled

Bit 13 **ADCEN:** ADC clock enable
Set and cleared by software.
0: ADC clock disabled
1: ADC clock enabled

Bit 12 **OTGFSEN:** OTG full speed clock enable (this bit is reserved for STM32L471 devices)
Set and cleared by software.
0: USB OTG full speed clock disabled
1: USB OTG full speed clock enabled

Bits 11:9 Reserved, must be kept at reset value.

Bit 8 **GPIOIEN**: IO port I clock enable (this bit is reserved for STM32L47x/L48x devices)
Set and cleared by software
0: IO port I clock disabled
1: IO port I clock enabled

Bit 7 **GPIOHEN:** IO port H clock enable
Set and cleared by software.
0: IO port H clock disabled
1: IO port H clock enabled

Bit 6 **GPIOGEN:** IO port G clock enable
Set and cleared by software.
0: IO port G clock disabled
1: IO port G clock enabled

Bit 5 **GPIOFEN:** IO port F clock enable
Set and cleared by software.
0: IO port F clock disabled
1: IO port F clock enabled

Bit 4 **GPIOEEN:** IO port E clock enable
Set and cleared by software.
0: IO port E clock disabled
1: IO port E clock enabled

Bit 3 **GPIODEN:** IO port D clock enable
Set and cleared by software.
0: IO port D clock disabled
1: IO port D clock enabled

Bit 2 **GPIOCEN:** IO port C clock enable
Set and cleared by software.
0: IO port C clock disabled
1: IO port C clock enabled

Bit 1 **GPIOBEN:** IO port B clock enable
Set and cleared by software.
0: IO port B clock disabled
1: IO port B clock enabled

Bit 0 **GPIOAEN:** IO port A clock enable
Set and cleared by software.
0: IO port A clock disabled
1: IO port A clock enabled

6.4.18 AHB3 peripheral clock enable register(RCC_AHB3ENR)

Address offset: 0x50

Reset value: 0x00000 0000

Access: no wait state, word, half-word and byte access

Note: When the peripheral clock is not active, the peripheral registers read or write access is not supported.

31	30	29	28	27	26	25	24	23	22	21	20	19	18	17	16
Res.	Res.	Res.	Res.	Res.	Res.	Res.	Res.	Res.	Res.	Res.	Res.	Res.	Res.	Res.	Res.

15	14	13	12	11	10	9	8	7	6	5	4	3	2	1	0
Res.	Res.	Res.	Res.	Res.	Res.	Res.	QSPI EN	Res.	Res.	Res.	Res.	Res.	Res.	Res.	FMC EN
							rw								rw

Bits 31:9 Reserved, must be kept at reset value.

Bit 8 **QSPIEN**: Quad SPI memory interface clock enable
Set and cleared by software.
0: QUADSPI clock disable
1: QUADSPI clock enable

Bits 7:1 Reserved, must be kept at reset value.

Bit 0 **FMCEN**: Flexible memory controller clock enable
Set and cleared by software.
0: FMC clock disable
1: FMC clock enable

6.4.19 APB1 peripheral clock enable register 1 (RCC_APB1ENR1)

Address: 0x58

Reset value:
0x0000 0000 (for STM32L47x/L48x devices)
0x0000 0400 (for STM32L49x/L4Ax devices)

Access: no wait state, word, half-word and byte access

Note: When the peripheral clock is not active, the peripheral registers read or write access is not supported.

31	30	29	28	27	26	25	24	23	22	21	20	19	18	17	16
LPTIM1 EN	OPAMP EN	DAC1 EN	PWR EN	Res.	CAN2 EN	CAN1 EN	CRSEN	I2C3 EN	I2C2 EN	I2C1 EN	UART5 EN	UART4 EN	USART3 EN	USART2 EN	Res.
rw	rw	rw	rw		rw	rw	rw	rw	rw	rw	rw	rw	rw	rw	

15	14	13	12	11	10	9	8	7	6	5	4	3	2	1	0
SPI3 EN	SPI2 EN	Res.	Res.	WWD GEN	RTCA PBEN	LCD EN	Res.	Res.	Res.	TIM7 EN	TIM6EN	TIM5EN	TIM4EN	TIM3EN	TIM2 EN
rw	rw			rs	rw	rw				rw	rw	rw	rw	rw	rw

Bit 31 **LPTIM1EN**: Low power timer 1 clock enable
Set and cleared by software.
0: LPTIM1 clock disabled
1: LPTIM1 clock enabled

Bit 30 **OPAMPEN**: OPAMP interface clock enable
Set and cleared by software.
0: OPAMP interface clock disabled
1: OPAMP interface clock enabled

Bit 29 **DAC1EN**: DAC1 interface clock enable
Set and cleared by software.
0: DAC1 interface clock disabled
1: DAC1 interface clock enabled

Bit 28 **PWREN**: Power interface clock enable
Set and cleared by software.
0: Power interface clock disabled
1: Power interface clock enabled

Bit 27 Reserved, must be kept at reset value.

Bit 26 **CAN2EN**: CAN2 clock enable (this bit is reserved for STM32L47x/L48x devices)
Set and cleared by software
0: CAN2 clock disabled
1: CAN2 clock enabled

Bit 25 **CAN1EN:** CAN1 clock enable
Set and cleared by software.
0: CAN1 clock disabled
1: CAN1 clock enabled

Bit 24 **CRSEN**: Clock Recovery System clock enable (this bit is reserved for STM32L47x/L48x devices)
Set and cleared by software
0: CRS clock disabled
1: CRS clock enabled

Bit 23 **I2C3EN**: I2C3 clock enable
Set and cleared by software.
0: I2C3 clock disabled
1: I2C3 clock enabled

Bit 22 **I2C2EN**: I2C2 clock enable
Set and cleared by software.
0: I2C2 clock disabled
1: I2C2 clock enabled

Bit 21 **I2C1EN**: I2C1 clock enable
Set and cleared by software.
0: I2C1 clock disabled
1: I2C1 clock enabled

Bit 20 **UART5EN**: UART5 clock enable
Set and cleared by software.
0: UART5 clock disabled
1: UART5 clock enabled

Bit 19 **UART4EN**: UART4 clock enable
Set and cleared by software.
0: UART4 clock disabled
1: UART4 clock enabled

Bit 18 **USART3EN**: USART3 clock enable
Set and cleared by software.
0: USART3 clock disabled
1: USART3 clock enabled

Bit 17 **USART2EN**: USART2 clock enable
Set and cleared by software.
0: USART2 clock disabled
1: USART2 clock enabled

Bit 16 Reserved, must be kept at reset value.

Bit 15 **SPI3EN**: SPI3 clock enable
Set and cleared by software.
0: SPI3 clock disabled
1: SPI3 clock enabled

Bit 14 **SPI2EN**: SPI2 clock enable
Set and cleared by software.
0: SPI2 clock disabled
1: SPI2 clock enabled

Bits 13:12 Reserved, must be kept at reset value.

Bit 11 **WWDGEN**: Window watchdog clock enable
Set by software to enable the window watchdog clock. Reset by hardware system reset. This bit can also be set by hardware if the WWDG_SW option bit is reset.
0: Window watchdog clock disabled
1: Window watchdog clock enabled

Bit 10 **RTCAPBEN**: RTC APB clock enable (this bit is reserved for STM32L47x/L48x devices)
Set and cleared by software
0: RTC APB clock disabled
1: RTC APB clock enabled

Bit 9 **LCDEN**: LCD clock enable (this bit is reserved for STM32L471/L4x5 devices)
Set and cleared by software.
0: LCD clock disabled
1: LCD clock enabled

Bits 8:6 Reserved, must be kept at reset value.

Bit 5 **TIM7EN**: TIM7 timer clock enable
Set and cleared by software.
0: TIM7 clock disabled
1: TIM7 clock enabled

Bit 4 **TIM6EN**: TIM6 timer clock enable
Set and cleared by software.
0: TIM6 clock disabled
1: TIM6 clock enabled

Bit 3 **TIM5EN**: TIM5 timer clock enable
Set and cleared by software.
0: TIM5 clock disabled
1: TIM5 clock enabled

Bit 2 **TIM4EN**: TIM4 timer clock enable
Set and cleared by software.
0: TIM4 clock disabled
1: TIM4 clock enabled

Bit 1 **TIM3EN**: TIM3 timer clock enable
Set and cleared by software.
0: TIM3 clock disabled
1: TIM3 clock enabled

Bit 0 **TIM2EN**: TIM2 timer clock enable
Set and cleared by software.
0: TIM2 clock disabled
1: TIM2 clock enabled

6.4.20 APB1 peripheral clock enable register 2 (RCC_APB1ENR2)

Address offset: 0x5C

Reset value: 0x00000 0000

Access: no wait state, word, half-word and byte access

Note: When the peripheral clock is not active, the peripheral registers read or write access is not supported.

31	30	29	28	27	26	25	24	23	22	21	20	19	18	17	16
Res.	Res.	Res.	Res.	Res.	Res.	Res.	Res.	Res.	Res.	Res.	Res.	Res.	Res.	Res.	Res.

15	14	13	12	11	10	9	8	7	6	5	4	3	2	1	0
Res.	Res.	Res.	Res.	Res.	Res.	Res.	Res.	Res.	Res.	LPTIM2 EN	Res.	Res.	SWP MI1 EN	I2C4EN	LP UART1 EN
													rw	rw	rw

Bits 31:6 Reserved, must be kept at reset value.

Bit 5 **LPTIM2EN** Low power timer 2 clock enable
Set and cleared by software.
0: LPTIM2 clock disable
1: LPTIM2 clock enable

Bits 4:3 Reserved, must be kept at reset value.

Bit 2 **SWPMI1EN**: Single wire protocol clock enable
Set and cleared by software.
0: SWPMI1 clock disable
1: SWPMI1 clock enable

Bit 1 **I2C4EN**: I2C4 clock enable (this bit is reserved for STM32L47x/L48x devices)
Set and cleared by software
0: I2C4 clock disabled
1: I2C4 clock enabled

Bit 0 **LPUART1EN**: Low power UART 1 clock enable
Set and cleared by software.
0: LPUART1 clock disable
1: LPUART1 clock enable

6.4.21 APB2 peripheral clock enable register (RCC_APB2ENR)

Address: 0x60

Reset value: 0x0000 0000

Access: word, half-word and byte access

Note: When the peripheral clock is not active, the peripheral registers read or write access is not supported.

31	30	29	28	27	26	25	24	23	22	21	20	19	18	17	16
Res.	Res.	Res.	Res.	Res.	Res.	Res.	DFSDM1EN	Res.	SAI2EN	SAI1EN	Res.	Res.	TIM17EN	TIM16EN	TIM15EN
							rw		rw	rw			rw	rw	rw

15	14	13	12	11	10	9	8	7	6	5	4	3	2	1	0
Res.	USART1EN	TIM8EN	SPI1EN	TIM1EN	SDMMC1EN	Res.	Res.	FWEN	Res.	Res.	Res.	Res.	Res.	Res.	SYSCFGEN
	rw	rw	rw	rw	rw			rs							rw

Bits 31:25 Reserved, must be kept at reset value.

Bit 24 **DFSDM1EN**: DFSDM1 timer clock enable
Set and cleared by software.
0: DFSDM1 clock disabled
1: DFSDM1 clock enabled

Bits 23 Reserved, must be kept at reset value.

Bit 22 **SAI2EN**: SAI2 clock enable
Set and cleared by software.
0: SAI2 clock disabled
1: SAI2 clock enabled

Bit 21 **SAI1EN**: SAI1 clock enable
Set and cleared by software.
0: SAI1 clock disabled
1: SAI1 clock enabled

Bits 20:19 Reserved, must be kept at reset value.

Bit 18 **TIM17EN**: TIM17 timer clock enable
Set and cleared by software.
0: TIM17 timer clock disabled
1: TIM17 timer clock enabled

Bit 17 **TIM16EN**: TIM16 timer clock enable
Set and cleared by software.
0: TIM16 timer clock disabled
1: TIM16 timer clock enabled

Bit 16 **TIM15EN**: TIM15 timer clock enable
Set and cleared by software.
0: TIM15 timer clock disabled
1: TIM15 timer clock enabled

Bit 15 Reserved, must be kept at reset value.

Bit 14 **USART1EN**: USART1clock enable
Set and cleared by software.
0: USART1clock disabled
1: USART1clock enabled

Bit 13 T**IM8EN**: TIM8 timer clock enable
Set and cleared by software.
0: TIM8 timer clock disabled
1: TIM8 timer clock enabled

Bit 12 **SPI1EN**: SPI1 clock enable
Set and cleared by software.
0: SPI1 clock disabled
1: SPI1 clock enabled

Bit 11 **TIM1EN**: TIM1 timer clock enable
Set and cleared by software.
0: TIM1 timer clock disabled
1: TIM1P timer clock enabled

Bit 10 **SDMMC1EN**: SDMMC clock enable
Set and cleared by software.
0: SDMMC clock disabled
1: SDMMC clock enabled

Bits 9:8 Reserved, must be kept at reset value.

Bit 7 **FWEN**: Firewall clock enable
Set by software, reset by hardware. Software can only write 1. A write at 0 has no effect.
0: Firewall clock disabled
1: Firewall clock enabled

Bits 6:1 Reserved, must be kept at reset value.

Bit 0 **SYSCFGEN**: SYSCFG + COMP + VREFBUF clock enable
Set and cleared by software.
0: SYSCFG + COMP + VREFBUF clock disabled
1: SYSCFG + COMP + VREFBUF clock enabled

6.4.22 AHB1 peripheral clocks enable in Sleep and Stop modes register (RCC_AHB1SMENR)

Address offset: 0x68

Reset value:
0x0001 1303 (for STM32L47x/L48x devices)
0x0003 1303 (for STM32L49x/L4Ax devices)

Access: no wait state, word, half-word and byte access

31	30	29	28	27	26	25	24	23	22	21	20	19	18	17	16
Res.	Res.	Res.	Res.	Res.	Res.	Res.	Res.	Res.	Res.	Res.	Res.	Res.	Res.	DMA2D SMEN	TSC SMEN
														rw	rw
15	14	13	12	11	10	9	8	7	6	5	4	3	2	1	0
Res.	Res.	Res.	CRCSMEN	Res.	Res.	SRAM1 SMEN	FLASH SMEN	Res.	Res.	Res.	Res.	Res.	Res.	DMA2 SMEN	DMA1 SMEN
			rw			rw	rw							rw	rw

Bits 31:18 Reserved, must be kept at reset value.

Bit 17 **DMA2DSMEN**: DMA2D clock enable during Sleep and Stop modes (this bit is reserved for STM32L47x/L48x devices)

Set and cleared by software

0: DMA2D clocks disabled by the clock gating(1) during Sleep and Stop modes

1: DMA2D clocks enabled by the clock gating(1) during Sleep and Stop modes

Bit 16 **TSCSMEN**: Touch Sensing Controller clocks enable during Sleep and Stop modes

Set and cleared by software.

0: TSC clocks disabled by the clock gating(1) during Sleep and Stop modes

1: TSC clocks enabled by the clock gating(1) during Sleep and Stop modes

Bits 15:13 Reserved, must be kept at reset value.

Bit 12 **CRCSMEN**: CRC clocks enable during Sleep and Stop modes

Set and cleared by software.

0: CRC clocks disabled by the clock gating(1) during Sleep and Stop modes

1: CRC clocks enabled by the clock gating(1) during Sleep and Stop modes

Bits 11:10 Reserved, must be kept at reset value.

Bit 9 **SRAM1SMEN**: SRAM1 interface clocks enable during Sleep and Stop modes

Set and cleared by software.

0: SRAM1 interface clocks disabled by the clock gating(1) during Sleep and Stop modes

1: SRAM1 interface clocks enabled by the clock gating(1) during Sleep and Stop modes

Bit 8 **FLASHSMEN**: Flash memory interface clocks enable during Sleep and Stop modes

Set and cleared by software.

0: Flash memory interface clocks disabled by the clock gating(1) during Sleep and Stop modes

1: Flash memory interface clocks enabled by the clock gating(1) during Sleep and Stop modes

Bits 7:2 Reserved, must be kept at reset value.

Bit 1 **DMA2SMEN**: DMA2 clocks enable during Sleep and Stop modes

Set and cleared by software during Sleep mode.

0: DMA2 clocks disabled by the clock gating(1) during Sleep and Stop modes

1: DMA2 clocks enabled by the clock gating(1) during Sleep and Stop modes

Bit 0 **DMA1SMEN**: DMA1 clocks enable during Sleep and Stop modes

Set and cleared by software.

0: DMA1 clocks disabled by the clock gating(1) during Sleep and Stop modes

1: DMA1 clocks enabled by the clock gating(1) during Sleep and Stop modes

1. This register only configures the clock gating, not the clock source itself. Most of the peripherals are clocked by a single clock (AHB or APB clock), which is always disabled in Stop mode. In this case setting the bit has no effect in Stop mode.

6.4.23 AHB2 peripheral clocks enable in Sleep and Stop modes register (RCC_AHB2SMENR)

Address offset: 0x6C

Reset value:
0x0005 32FF (for STM32L47x/L48x devices)
0x0007 73FF (for STM32L49x/L4Ax devices)

Access: no wait state, word, half-word and byte access

31	30	29	28	27	26	25	24	23	22	21	20	19	18	17	16
Res.	Res.	Res.	Res.	Res.	Res.	Res.	Res.	Res.	Res.	Res.	Res.	Res.	RNG SMEN	HASHS MEN	AES SMEN
													rw	rw	rw

15	14	13	12	11	10	9	8	7	6	5	4	3	2	1	0
Res.	DCMIS MEN	ADC SMEN	OTGFS SMEN	Res.	Res.	SRAM2 SMEN	GPIOIS MEN	GPIOH SMEN	GPIOG SMEN	GPIOF SMEN	GPIOE SMEN	GPIOD SMEN	GPIOC SMEN	GPIOB SMEN	GPIOA SMEN
	rw	rw	rw			rw	rw	rw	rw	rw	rw	rw	rw	rw	rw

Bits 31:19 Reserved, must be kept at reset value.

Bit 18 **RNGSMEN:** Random Number Generator clocks enable during Sleep and Stop modes
Set and cleared by software.
0: Random Number Generator clocks disabled by the clock gating during Sleep and Stop modes
1: Random Number Generator clocks enabled by the clock gating during Sleep and Stop modes

Bit 17 **HASHSMEN**: HASH clock enable during Sleep and Stop modes (this bit is reserved for STM32L47x/L48x devices)
Set and cleared by software
0: HASH clocks disabled by the clock gating(1) during Sleep and Stop modes
1: HASH clocks enabled by the clock gating(1) during Sleep and Stop modes

Bit 16 **AESSMEN:** AES accelerator clocks enable during Sleep and Stop modes (this bit is reserved on STM32L47x/L49x devices)
Set and cleared by software.
0: AES clocks disabled by the clock gating(1) during Sleep and Stop modes
1: AES clocks enabled by the clock gating(1) during Sleep and Stop modes

Bit 15 Reserved, must be kept at reset value.

Bit 14 **DCMISMEN**: DCMI clock enable during Sleep and Stop modes (this bit is reserved for STM32L47x/L48x devices)
Set and cleared by software
0: DCMI clocks disabled by the clock gating(1) during Sleep and Stop modes
1: DCMI clocks enabled by the clock gating(1) during Sleep and Stop modes

Bit 13 **ADCSMEN:** ADC clocks enable during Sleep and Stop modes
Set and cleared by software.
0: ADC clocks disabled by the clock gating(1) during Sleep and Stop modes
1: ADC clocks enabled by the clock gating(1) during Sleep and Stop modes

Bit 12 **OTGFSSMEN:** OTG full speed clocks enable during Sleep and Stop modes (this bit is reserved for STM32L471 devices)

Set and cleared by software.
0: USB OTG full speed clocks disabled by the clock gating(1) during Sleep and Stop modes
1: USB OTG full speed clocks enabled by the clock gating(1) during Sleep and Stop modes

Bits 11:10 Reserved, must be kept at reset value.

Bit 9 **SRAM2SMEN:** SRAM2 interface clocks enable during Sleep and Stop modes

Set and cleared by software.
0: SRAM2 interface clocks disabled by the clock gating(1) during Sleep and Stop modes
1: SRAM2 interface clocks enabled by the clock gating(1) during Sleep and Stop modes

Bit 8 **GPIOISMEN**: IO port I clocks enable during Sleep and Stop modes (this bit is reserved for STM32L47x/L48x devices)

Set and cleared by software
0: IO port I clocks disabled by the clock gating(1) during Sleep and Stop modes
1: IO port I clocks enabled by the clock gating(1) during Sleep and Stop modes

Bit 7 **GPIOHSMEN:** IO port H clocks enable during Sleep and Stop modes

Set and cleared by software.
0: IO port H clocks disabled by the clock gating(1) during Sleep and Stop modes
1: IO port H clocks enabled by the clock gating(1) during Sleep and Stop modes

Bit 6 **GPIOGSMEN:** IO port G clocks enable during Sleep and Stop modes

Set and cleared by software.
0: IO port G clocks disabled by the clock gating(1) during Sleep and Stop modes
1: IO port G clocks enabled by the clock gating(1) during Sleep and Stop modes

Bit 5 **GPIOFSMEN:** IO port F clocks enable during Sleep and Stop modes

Set and cleared by software.
0: IO port F clocks disabled by the clock gating(1) during Sleep and Stop modes
1: IO port F clocks enabled by the clock gating(1) during Sleep and Stop modes

Bit 4 **GPIOESMEN:** IO port E clocks enable during Sleep and Stop modes

Set and cleared by software.
0: IO port E clocks disabled by the clock gating(1) during Sleep and Stop modes
1: IO port E clocks enabled by the clock gating(1) during Sleep and Stop modes

Bit 3 **GPIODSMEN:** IO port D clocks enable during Sleep and Stop modes

Set and cleared by software.
0: IO port D clocks disabled by the clock gating(1) during Sleep and Stop modes
1: IO port D clocks enabled by the clock gating(1) during Sleep and Stop modes

Bit 2 **GPIOCSMEN:** IO port C clocks enable during Sleep and Stop modes
Set and cleared by software.
0: IO port C clocks disabled by the clock gating(1) during Sleep and Stop modes
1: IO port C clocks enabled by the clock gating(1) during Sleep and Stop modes

Bit 1 **GPIOBSMEN:** IO port B clocks enable during Sleep and Stop modes
Set and cleared by software.
0: IO port B clocks disabled by the clock gating(1) during Sleep and Stop modes
1: IO port B clocks enabled by the clock gating(1) during Sleep and Stop modes

Bit 0 **GPIOASMEN:** IO port A clocks enable during Sleep and Stop modes
Set and cleared by software.
0: IO port A clocks disabled by the clock gating(1) during Sleep and Stop modes
1: IO port A clocks enabled by the clock gating(1) during Sleep and Stop modes

1. This register only configures the clock gating, not the clock source itself. Most of the peripherals are clocked by a single clock (AHB or APB clock), which is always disabled in Stop mode. In this case setting the bit has no effect in Stop mode.

6.4.24 AHB3 peripheral clocks enable in Sleep and Stop modes register (RCC_AHB3SMENR)

Address offset: 0x70

Reset value: 0x00000 0101

Access: no wait state, word, half-word and byte access

31	30	29	28	27	26	25	24	23	22	21	20	19	18	17	16
Res.	Res.	Res.	Res.	Res.	Res.	Res.	Res.	Res.	Res.	Res.	Res.	Res.	Res.	Res.	Res.
15	14	13	12	11	10	9	8	7	6	5	4	3	2	1	0
Res.	Res.	Res.	Res.	Res.	Res.	Res.	QSPI SMEN	Res.	Res.	Res.	Res.	Res.	Res.	Res.	FMC SMEN
							rw								rw

Bits 31:9 Reserved, must be kept at reset value.

Bit 8 **QSPISMEN** Quad SPI memory interface clocks enable during Sleep and Stop modes
Set and cleared by software.
0: QUADSPI clocks disabled by the clock gating(1) during Sleep and Stop modes
1: QUADSPI clocks enabled by the clock gating(1) during Sleep and Stop modes

Bits 7:1 Reserved, must be kept at reset value.

Bit 0 **FMCSMEN**: Flexible memory controller clocks enable during Sleep and Stop modes
Set and cleared by software.
0: FMC clocks disabled by the clock gating(1) during Sleep and Stop modes
1: FMC clocks enabled by the clock gating(1) during Sleep and Stop modes

1. This register only configures the clock gating, not the clock source itself. Most of the peripherals are clocked by a single clock (AHB or APB clock), which is always disabled in Stop mode. In this case setting the bit has no effect in Stop mode.

6.4.25 APB1 peripheral clocks enable in Sleep and Stop modes register 1 (RCC_APB1SMENR1)

Address: 0x78

Reset value:
0xF2FE CA3F (for STM32L47x/L48x devices)
0xF7FE CE3F (for STM32L49x/L4Ax devices)

Access: no wait state, word, half-word and byte access

31	30	29	28	27	26	25	24	23	22	21	20	19	18	17	16
LPTIM1 SMEN	OPAMP SMEN	DAC1 SMEN	PWR SMEN	Res.	CAN2 SMEN	CAN1 SMEN	CRSS MEN	I2C3 SMEN	I2C2 SMEN	I2C1 SMEN	UART5 SMEN	UART4 SMEN	USART3 SMEN	USART2 SMEN	Res.
rw	rw	rw	rw		rw	rw	rw	rw	rw	rw	rw	rw	rw	rw	
15	14	13	12	11	10	9	8	7	6	5	4	3	2	1	0
SPI3 SMEN	SPI2 SMEN	Res.	Res.	WWDG SMEN	RTCA PBSM EN	LCD SMEN	Res.	Res.	Res.	TIM7 SMEN	TIM6 SMEN	TIM5 SMEN	TIM4 SMEN	TIM3 SMEN	TIM2 SMEN
rw	rw			rw	rw	rw				rw	rw	rw	rw	rw	rw

Bit 31 **LPTIM1SMEN**: Low power timer 1 clocks enable during Sleep and Stop modes
Set and cleared by software.
0: LPTIM1 clocks disabled by the clock gating(1) during Sleep and Stop modes
1: LPTIM1 clocks enabled by the clock gating(1) during Sleep and Stop modes

Bit 30 **OPAMPSMEN**: OPAMP interface clocks enable during Sleep and Stop modes
Set and cleared by software.
0: OPAMP interface clocks disabled by the clock gating(1) during Sleep and Stop modes
1: OPAMP interface clocks enabled by the clock gating(1) during Sleep and Stop modes

Bit 29 **DAC1SMEN**: DAC1 interface clocks enable during Sleep and Stop modes
Set and cleared by software.
0: DAC1 interface clocks disabled by the clock gating(1) during Sleep and Stop modes
1: DAC1 interface clocks enabled by the clock gating(1) during Sleep and Stop modes

Bit 28 **PWRSMEN**: Power interface clocks enable during Sleep and Stop modes
Set and cleared by software.
0: Power interface clocks disabled by the clock gating(1) during Sleep and Stop modes
1: Power interface clocks enabled by the clock gating(1) during Sleep and Stop modes

Bit 27 Reserved, must be kept at reset value.

Bit 26 **CAN2SMEN**: CAN2 clocks enable during Sleep and Stop modes (this bit is reserved for STM32L47x/L48x devices)
Set and cleared by software
0: CAN2 clocks disabled by the clock gating(1) during Sleep and Stop modes
1: CAN2 clocks enabled by the clock gating(1) during Sleep and Stop modes

Bit 25 **CAN1SMEN:** CAN1 clocks enable during Sleep and Stop modes
Set and cleared by software.
0: CAN1 clocks disabled by the clock gating(1) during Sleep and Stop modes
1: CAN1 clocks enabled by the clock gating(1) during Sleep and Stop modes

Bit 24 **CRSSMEN**: CRS clock enable during Sleep and Stop modes (this bit is reserved for STM32L47x/L48x devices)
Set and cleared by software.
0: CRS clocks disabled by the clock gating(1) during Sleep and Stop modes
1: CRS clocks enabled by the clock gating(1) during Sleep and Stop modes

Bit 23 **I2C3SMEN**: I2C3 clocks enable during Sleep and Stop modes
Set and cleared by software.
0: I2C3 clocks disabled by the clock gating(1) during Sleep and Stop modes
1: I2C3 clocks enabled by the clock gating(1) during Sleep and Stop modes

Bit 22 **I2C2SMEN**: I2C2 clocks enable during Sleep and Stop modes
Set and cleared by software.
0: I2C2 clocks disabled by the clock gating(1) during Sleep and Stop modes
1: I2C2 clocks enabled by the clock gating(1) during Sleep and Stop modes

Bit 21 **I2C1SMEN**: I2C1 clocks enable during Sleep and Stop modes
Set and cleared by software.
0: I2C1 clocks disabled by the clock gating(1) during Sleep and Stop modes
1: I2C1 clocks enabled by the clock gating(1) during Sleep and Stop modes

Bit 20 **UART5SMEN**: UART5 clocks enable during Sleep and Stop modes
Set and cleared by software.
0: UART5 clocks disabled by the clock gating(1) during Sleep and Stop modes
1: UART5 clocks enabled by the clock gating(1) during Sleep and Stop modes

Bit 19 **UART4SMEN**: UART4 clocks enable during Sleep and Stop modes
Set and cleared by software.
0: UART4 clocks disabled by the clock gating(1) during Sleep and Stop modes
1: UART4 clocks enabled by the clock gating(1) during Sleep and Stop modes

Bit 18 **USART3SMEN**: USART3 clocks enable during Sleep and Stop modes
Set and cleared by software.
0: USART3 clocks disabled by the clock gating(1) during Sleep and Stop modes
1: USART3 clocks enabled by the clock gating(1) during Sleep and Stop modes

Bit 17 **USART2SMEN**: USART2 clocks enable during Sleep and Stop modes
Set and cleared by software.
0: USART2 clocks disabled by the clock gating(1) during Sleep and Stop modes
1: USART2 clocks enabled by the clock gating(1) during Sleep and Stop modes

Bit 16 Reserved, must be kept at reset value.

Bit 15 **SPI3SMEN**: SPI3 clocks enable during Sleep and Stop modes
Set and cleared by software.
0: SPI3 clocks disabled by the clock gating(1) during Sleep and Stop modes
1: SPI3 clocks enabled by the clock gating(1) during Sleep and Stop modes

Bit 14 **SPI2SMEN**: SPI2 clocks enable during Sleep and Stop modes
Set and cleared by software.
0: SPI2 clocks disabled by the clock gating(1) during Sleep and Stop modes
1: SPI2 clocks enabled by the clock gating(1) during Sleep and Stop modes

Bits 13:12 Reserved, must be kept at reset value.

Bit 11 **WWDGSMEN**: Window watchdog clocks enable during Sleep and Stop modes
Set and cleared by software. This bit is forced to ‘1’ by hardware when the hardware WWDG option is activated.
0: Window watchdog clocks disabled by the clock gating(1) during Sleep and Stop modes
1: Window watchdog clocks enabled by the clock gating(1) during Sleep and Stop modes

Bit 10 **RTCAPBSMEN**: RTC APB clock enable during Sleep and Stop modes (this bit is reserved for STM32L47x/L48x devices)
Set and cleared by software
0: RTC APB clock disabled by the clock gating(1) during Sleep and Stop modes
1: RTC APB clock enabled by the clock gating(1) during Sleep and Stop modes

Bit 9 **LCDSMEN**: LCD clocks enable during Sleep and Stop modes (this bit is reserved for STM32L471/L4x5 devices)
Set and cleared by software.
0: LCD clocks disabled by the clock gating(1) during Sleep and Stop modes
1: LCD clocks enabled by the clock gating(1) during Sleep and Stop modes

Bits 8:6 Reserved, must be kept at reset value.

Bit 5 **TIM7SMEN**: TIM7 timer clocks enable during Sleep and Stop modes
Set and cleared by software.
0: TIM7 clocks disabled by the clock gating(1) during Sleep and Stop modes
1: TIM7 clocks enabled by the clock gating(1) during Sleep and Stop modes

Bit 4 **TIM6SMEN**: TIM6 timer clocks enable during Sleep and Stop modes
Set and cleared by software.
0: TIM6 clocks disabled by the clock gating(1) during Sleep and Stop modes
1: TIM6 clocks enabled by the clock gating(1) during Sleep and Stop modes

Bit 3 **TIM5SMEN**: TIM5 timer clocks enable during Sleep and Stop modes
Set and cleared by software.
0: TIM5 clocks disabled by the clock gating(1) during Sleep and Stop modes
1: TIM5 clocks enabled by the clock gating(1) during Sleep and Stop modes

Bit 2 **TIM4SMEN**: TIM4 timer clocks enable during Sleep and Stop modes
Set and cleared by software.
0: TIM4 clocks disabled by the clock gating(1) during Sleep and Stop modes
1: TIM4 clocks enabled by the clock gating(1) during Sleep and Stop modes

Bit 1 **TIM3SMEN**: TIM3 timer clocks enable during Sleep and Stop modes
Set and cleared by software.
0: TIM3 clocks disabled by the clock gating(1) during Sleep and Stop modes
1: TIM3 clocks enabled by the clock gating(1) during Sleep and Stop modes

Bit 0 **TIM2SMEN**: TIM2 timer clocks enable during Sleep and Stop modes
Set and cleared by software.
0: TIM2 clocks disabled by the clock gating(1) during Sleep and Stop modes
1: TIM2 clocks enabled by the clock gating(1) during Sleep and Stop modes

1. This register only configures the clock gating, not the clock source itself. Most of the peripherals are clocked by a single clock (AHB or APB clock), which is always disabled in Stop mode. In this case setting the bit has no effect in Stop mode.

6.4.26 APB1 peripheral clocks enable in Sleep and Stop modes register 2 (RCC_APB1SMENR2)

Address offset: 0x7C
Reset value:
0x0000 0025 (for STM32L47x/L48x devices)
0x0000 0027 (for STM32L49x/L4Ax devices)

Access: no wait state, word, half-word and byte access

31	30	29	28	27	26	25	24	23	22	21	20	19	18	17	16
Res.	Res.	Res.	Res.	Res.	Res.	Res.	Res.	Res.	Res.	Res.	Res.	Res.	Res.	Res.	Res.

15	14	13	12	11	10	9	8	7	6	5	4	3	2	1	0
Res.	Res.	Res.	Res.	Res.	Res.	Res.	Res.	Res.	Res.	LPTIM 2SMEN	Res.	Res.	SWP MI1 SMEN	I2C4S MEN	LP UART1 SMEN
										rw			rw	rw	rw

Bits 31:6 Reserved, must be kept at reset value.

Bit 5 **LPTIM2SMEN** Low power timer 2 clocks enable during Sleep and Stop modes
Set and cleared by software.
0: LPTIM2 clocks disabled by the clock gating(1) during Sleep and Stop modes
1: LPTIM2 clocks enabled by the clock gating(1) during Sleep and Stop modes

Bits 4:3 Reserved, must be kept at reset value.

Bit 2 **SWPMI1SMEN**: Single wire protocol clocks enable during Sleep and Stop modes
Set and cleared by software.
0: SWPMI1 clocks disabled by the clock gating(1) during Sleep and Stop modes
1: SWPMI1 clocks enabled by the clock gating(1) during Sleep and Stop modes

Bit 1 **I2C4SMEN**: I2C4 clocks enable during Sleep and Stop modes (this bit is reserved for STM32L47x/L48x devices)
Set and cleared by software
0: I2C4 clocks disabled by the clock gating(1) during Sleep and Stop modes
1: I2C4 clocks enabled by the clock gating(1) during Sleep and Stop modes

Bit 0 **LPUART1SMEN**: Low power UART 1 clocks enable during Sleep and Stop modes
Set and cleared by software.
0: LPUART1 clocks disabled by the clock gating(1) during Sleep and Stop modes
1: LPUART1 clocks enabled by the clock gating(1) during Sleep and Stop modes

1. This register only configures the clock gating, not the clock source itself. Most of the peripherals are clocked by a single clock (AHB or APB clock), which is always disabled in Stop mode. In this case setting the bit has no effect in Stop mode.

6.4.27 APB2 peripheral clocks enable in Sleep and Stop modes register (RCC_APB2SMENR)

Address: 0x80

Reset value: 0x0167 7C01

Access: word, half-word and byte access

31	30	29	28	27	26	25	24	23	22	21	20	19	18	17	16
Res.	Res.	Res.	Res.	Res.	Res.	Res.	DFSDM1 SMEN	Res.	SAI2 SMEN	SAI1 SMEN	Res.	Res.	TIM17 SMEN	TIM16 SMEN	TIM15 SMEN
							rw		rw	rw			rw	rw	rw

15	14	13	12	11	10	9	8	7	6	5	4	3	2	1	0
Res.	USART1 SMEN	TIM8 SMEN	SPI1 SMEN	TIM1 SMEN	SD MMC1 SMEN	Res.	Res.	Res.	Res.	Res.	Res.	Res.	Res.	Res.	SYS CFG SMEN
	rw	rw	rw	rw	rw										rw

Bits 3125 Reserved, must be kept at reset value.

Bit 24 **DFSDM1SMEN**: DFSDM1 timer clocks enable during Sleep and Stop modes
Set and cleared by software.
0: DFSDM1 clocks disabled by the clock gating(1) during Sleep and Stop modes
1: DFSDM1 clocks enabled by the clock gating(1) during Sleep and Stop modes

Bit 23 Reserved, must be kept at reset value.

Bit 22 **SAI2SMEN**: SAI2 clocks enable during Sleep and Stop modes
Set and cleared by software.
0: SAI2 clocks disabled by the clock gating(1) during Sleep and Stop modes
1: SAI2 clocks enabled by the clock gating(1) during Sleep and Stop modes

Bit 21 **SAI1SMEN**: SAI1 clocks enable during Sleep and Stop modes
Set and cleared by software.
0: SAI1 clocks disabled by the clock gating(1) during Sleep and Stop modes
1: SAI1 clocks enabled by the clock gating(1) during Sleep and Stop modes

Bits 20:19 Reserved, must be kept at reset value.

Bit 18 **TIM17SMEN**: TIM17 timer clocks enable during Sleep and Stop modes
Set and cleared by software.
0: TIM17 timer clocks disabled by the clock gating(1) during Sleep and Stop modes
1: TIM17 timer clocks enabled by the clock gating(1) during Sleep and Stop modes

Bit 17 **TIM16SMEN**: TIM16 timer clocks enable during Sleep and Stop modes
Set and cleared by software.
0: TIM16 timer clocks disabled by the clock gating(1) during Sleep and Stop modes
1: TIM16 timer clocks enabled by the clock gating(1) during Sleep and Stop modes

Bit 16 **TIM15SMEN**: TIM15 timer clocks enable during Sleep and Stop modes
Set and cleared by software.
0: TIM15 timer clocks disabled by the clock gating(1) during Sleep and Stop modes
1: TIM15 timer clocks enabled by the clock gating(1) during Sleep and Stop modes

Bit 15 Reserved, must be kept at reset value.

Bit 14 **USART1SMEN**: USART1clocks enable during Sleep and Stop modes
Set and cleared by software.
0: USART1clocks disabled by the clock gating(1) during Sleep and Stop modes
1: USART1clocks enabled by the clock gating(1) during Sleep and Stop modes

Bit 13 T**IM8SMEN**: TIM8 timer clocks enable during Sleep and Stop modes
Set and cleared by software.
0: TIM8 timer clocks disabled by the clock gating(1) during Sleep and Stop modes
1: TIM8 timer clocks enabled by the clock gating(1) during Sleep and Stop modes

Bit 12 **SPI1SMEN**: SPI1 clocks enable during Sleep and Stop modes
Set and cleared by software.
0: SPI1 clocks disabled by the clock gating during(1) Sleep and Stop modes
1: SPI1 clocks enabled by the clock gating during(1) Sleep and Stop modes

Bit 11 **TIM1SMEN**: TIM1 timer clocks enable during Sleep and Stop modes
Set and cleared by software.
0: TIM1 timer clocks disabled by the clock gating(1) during Sleep and Stop modes
1: TIM1P timer clocks enabled by the clock gating(1) during Sleep and Stop modes

Bit 10 **SDMMC1SMEN**: SDMMC clocks enable during Sleep and Stop modes
Set and cleared by software.
0: SDMMC clocks disabled by the clock gating(1) during Sleep and Stop modes
1: SDMMC clocks enabled by the clock gating(1) during Sleep and Stop modes

Bits 9:1 Reserved, must be kept at reset value.

Bit 0 **SYSCFGSMEN**: SYSCFG + COMP + VREFBUF clocks enable during Sleep and Stop modes
Set and cleared by software.
0: SYSCFG + COMP + VREFBUF clocks disabled by the clock gating(1) during Sleep and Stop modes
1: SYSCFG + COMP + VREFBUF clocks enabled by the clock gating(1) during Sleep and Stop modes

1. This register only configures the clock gating, not the clock source itself. Most of the peripherals are clocked by a single clock (AHB or APB clock), which is always disabled in Stop mode. In this case setting the bit has no effect in Stop mode.

6.4.28 Peripherals independent clock configuration register (RCC_CCIPR)

Address: 0x88

Reset value: 0x0000 0000

Access: no wait states, word, half-word and byte access

31	30	29	28	27	26	25	24	23	22	21	20	19	18	17	16
DFSDM1 SEL	SWPMI1 SEL	ADCSEL[1:0]		CLK48SEL[1:0]		SAI2SEL[1:0]		SAI1SEL[1:0]		LPTIM2SEL[1:0]		LPTIM1SEL[1:0		I2C3SEL[1:0]	
rw	rw	rw	rw	rw	rw	rw	rw	rw	rw	rw	rw	rw	rw	rw	rw

15	14	13	12	11	10	9	8	7	6	5	4	3	2	1	0
I2C2SEL[1:0]		I2C1SEL[1:0]		LPUART1SEL [1:0]		UART5SEL [1:0]		UART4SEL [1:0]		USART3SEL [1:0]		USART2SEL [1:0]		USART1SEL [1:0]	
rw	rw	rw	rw	rw	rw	rw	rw	rw	rw	rw	rw	rw	rw	rw	rw

Bit 31 **DFSDM1SEL**: DFSDM1 clock source selection

This bit is set and cleared by software to select the DFSDM1 clock source.
0: APB2 (PCLK2) selected as DFSDM1 clock
1: System clock (SYSCLK) used as DFSDM1 clock

Bit 30 **SWPMI1SEL**: SWPMI1 clock source selection

This bit is set and cleared by software to select the SWPMI1 clock source.
0: APB1 (PCLK1) selected as SWPMI1 clock
1: HSI16 clock selected as SWPMI1 clock

Bits 29:28 **ADCSEL[1:0]**: ADCs clock source selection

These bits are set and cleared by software to select the clock source used by the ADC interface.
00: No clock selected
01: PLLSAI1 “R” clock (PLLADC1CLK) selected as ADCs clock
10: PLLSAI2 “R” clock (PLLADC2CLK) selected as ADCs clock
11: System clock selected as ADCs clock

Bits 27:26 **CLK48SEL[1:0]**: 48 MHz clock source selection

These bits are set and cleared by software to select the 48 MHz clock source used by USB OTG FS, RNG and SDMMC.
00: HSI48 clock selected as 48 MHz clock (only for STM32L49x/L4Ax devices, otherwise no clock selected)
01: PLLSAI1 “Q” clock (PLL48M2CLK) selected as 48 MHz clock
10: PLL “Q” clock (PLL48M1CLK) selected as 48 MHz clock
11: MSI clock selected as 48 MHz clock

Bits 25:24 **SAI2SEL[1:0]**: SAI2 clock source selection

These bits are set and cleared by software to select the SAI2 clock source.
00: PLLSAI1 “P” clock (PLLSAI1CLK) selected as SAI2 clock
01: PLLSAI2 “P” clock (PLLSAI2CLK) selected as SAI2 clock
10: PLL “P” clock (PLLSAI3CLK) selected as SAI2 clock
11: External input SAI2_EXTCLK selected as SAI2 clock

Caution: If the selected clock is the external clock, it is not possible to switch to another clock if the external clock is not present.

Bits 23:22 **SAI1SEL[1:0]**: SAI1 clock source selection

These bits are set and cleared by software to select the SAI1 clock source.
00: PLLSAI1 “P” clock (PLLSAI1CLK) selected as SAI1 clock
01: PLLSAI2 “P” clock (PLLSAI2CLK) selected as SAI1 clock
10: PLL “P” clock (PLLSAI3CLK) selected as SAI1 clock
11: External input SAI1_EXTCLK selected as SAI1 clock

Caution: If the selected clock is the external clock, it is not possible to switch to another clock if the external clock is not present.

Bits 21:20 **LPTIM2SEL[1:0]**: Low power timer 2 clock source selection

These bits are set and cleared by software to select the LPTIM2 clock source.
00: PCLK selected as LPTIM2 clock
01: LSI clock selected as LPTIM2 clock
10: HSI16 clock selected as LPTIM2 clock
11: LSE clock selected as LPTIM2 clock

Bits 19:18 **LPTIM1SEL[1:0]**: Low power timer 1 clock source selection
These bits are set and cleared by software to select the LPTIM1 clock source.
00: PCLK selected as LPTIM1 clock
01: LSI clock selected as LPTIM1 clock
10: HSI16 clock selected as LPTIM1 clock
11: LSE clock selected as LPTIM1 clock

Bits 17:16 **I2C3SEL[1:0]**: I2C3 clock source selection
These bits are set and cleared by software to select the I2C3 clock source.
00: PCLK selected as I2C3 clock
01: System clock (SYSCLK) selected as I2C3 clock
10: HSI16 clock selected as I2C3 clock
11: Reserved

Bits 15:14 **I2C2SEL[1:0]**: I2C2 clock source selection
These bits are set and cleared by software to select the I2C2 clock source.
00: PCLK selected as I2C2 clock
01: System clock (SYSCLK) selected as I2C2 clock
10: HSI16 clock selected as I2C2 clock
11: Reserved

Bits 13:12 **I2C1SEL[1:0]**: I2C1 clock source selection
These bits are set and cleared by software to select the I2C1 clock source.
00: PCLK selected as I2C1 clock
01: System clock (SYSCLK) selected as I2C1 clock
10: HSI16 clock selected as I2C1 clock
11: Reserved

Bits 11:10 **LPUART1SEL[1:0]**: LPUART1 clock source selection
These bits are set and cleared by software to select the LPUART1 clock source.
00: PCLK selected as LPUART1 clock
01: System clock (SYSCLK) selected as LPUART1 clock
10: HSI16 clock selected as LPUART1 clock
11: LSE clock selected as LPUART1 clock

Bits 9:8 **UART5SEL[1:0]**: UART5 clock source selection
These bits are set and cleared by software to select the UART5 clock source.
00: PCLK selected as UART5 clock
01: System clock (SYSCLK) selected as UART5 clock
10: HSI16 clock selected as UART5 clock
11: LSE clock selected as UART5 clock

Bits 7:6 **UART4SEL[1:0]**: UART4 clock source selection
This bit is set and cleared by software to select the UART4 clock source.
00: PCLK selected as UART4 clock
01: System clock (SYSCLK) selected as UART4 clock
10: HSI16 clock selected as UART4 clock
11: LSE clock selected as UART4 clock

Bits 5:4 **USART3SEL[1:0]**: USART3 clock source selection
This bit is set and cleared by software to select the USART3 clock source.
00: PCLK selected as USART3 clock
01: System clock (SYSCLK) selected as USART3 clock
10: HSI16 clock selected as USART3 clock
11: LSE clock selected as USART3 clock

Bits 3:2 **USART2SEL[1:0]**: USART2 clock source selection
This bit is set and cleared by software to select the USART2 clock source.
00: PCLK selected as USART2 clock
01: System clock (SYSCLK) selected as USART2 clock
10: HSI16 clock selected as USART2 clock
11: LSE clock selected as USART2 clock

Bits 1:0 **USART1SEL[1:0]**: USART1 clock source selection
This bit is set and cleared by software to select the USART1 clock source.
00: PCLK selected as USART1 clock
01: System clock (SYSCLK) selected as USART1 clock
10: HSI16 clock selected as USART1 clock
11: LSE clock selected as USART1 clock

6.4.29 Backup domain control register (RCC_BDCR)

Address offset: 0x90
Reset value: 0x0000 0000, reset by Backup domain Reset, except LSCOSEL, LSCOEN and BDRST which are reset only by Backup domain power-on reset.
Access: 0 ≤ wait state ≤ 3, word, half-word and byte access
Wait states are inserted in case of successive accesses to this register.

Note: The bits of the Backup domain control register (RCC_BDCR) are outside of the V_{CORE} domain. As a result, after Reset, these bits are write-protected and the DBP bit in the Section 5.4.1: Power control register 1 (PWR_CR1) has to be set before these can be modified. Refer to Section 5.1.5: Battery backup domain on page 156 for further information. These bits (except LSCOSEL, LSCOEN and BDRST) are only reset after a Backup domain Reset (see Section 6.1.3: Backup domain reset). Any internal or external Reset will not have any effect on these bits.

31	30	29	28	27	26	25	24	23	22	21	20	19	18	17	16
Res.	Res.	Res.	Res.	Res.	Res.	LSCO SEL	LSCO EN	Res.	Res.	Res.	Res.	Res.	Res.	Res.	BDRST
						rw	rw								rw

15	14	13	12	11	10	9	8	7	6	5	4	3	2	1	0
RTC EN	Res.	Res.	Res.	Res.	Res.	RTCSEL[1:0]		Res.	LSE CSSD	LSE CSSON	LSEDRV[1:0]		LSE BYP	LSE RDY	LSEON
rw						rw	rw		r	rw	rw	rw	rw	r	rw

Bits 31:26 Reserved, must be kept at reset value.

Bit 25 **LSCOSEL**: Low speed clock output selection
Set and cleared by software.
0: LSI clock selected
1: LSE clock selected

Bit 24 **LSCOEN**: Low speed clock output enable
Set and cleared by software.
0: Low speed clock output (LSCO) disable
1: Low speed clock output (LSCO) enable

Bits 23:17 Reserved, must be kept at reset value.

Bit 16 **BDRST**: Backup domain software reset
Set and cleared by software.
0: Reset not activated
1: Reset the entire Backup domain

Bit 15 **RTCEN**: RTC clock enable
Set and cleared by software.
0: RTC clock disabled
1: RTC clock enabled

Bits 14:10 Reserved, must be kept at reset value.

Bits 9:8 **RTCSEL[1:0]**: RTC clock source selection
Set by software to select the clock source for the RTC. Once the RTC clock source has been selected, it cannot be changed anymore unless the Backup domain is reset, or unless a failure is detected on LSE (LSECSSD is set). The BDRST bit can be used to reset them.
00: No clock
01: LSE oscillator clock used as RTC clock
10: LSI oscillator clock used as RTC clock
11: HSE oscillator clock divided by 32 used as RTC clock

Bit 7 Reserved, must be kept at reset value.

Bit 6 **LSECSSD** CSS on LSE failure Detection
Set by hardware to indicate when a failure has been detected by the Clock Security System on the external 32 kHz oscillator (LSE).
0: No failure detected on LSE (32 kHz oscillator)
1: Failure detected on LSE (32 kHz oscillator)

Bit 5 **LSECSSON** CSS on LSE enable
Set by software to enable the Clock Security System on LSE (32 kHz oscillator).
LSECSSON must be enabled after the LSE oscillator is enabled (LSEON bit enabled) and ready (LSERDY flag set by hardware), and after the RTCSEL bit is selected.
Once enabled this bit cannot be disabled, except after a LSE failure detection (LSECSSD =1). In that case the software MUST disable the LSECSSON bit.
0: CSS on LSE (32 kHz external oscillator) OFF
1: CSS on LSE (32 kHz external oscillator) ON

Bits 4:3 **LSEDRV[1:0]** LSE oscillator drive capability

Set by software to modulate the LSE oscillator's drive capability.
00: 'Xtal mode' lower driving capability
01: 'Xtal mode' medium low driving capability
10: 'Xtal mode' medium high driving capability
11: 'Xtal mode' higher driving capability
The oscillator is in Xtal mode when it is not in bypass mode.

Bit 2 **LSEBYP**: LSE oscillator bypass

Set and cleared by software to bypass oscillator in debug mode. This bit can be written only when the external 32 kHz oscillator is disabled (LSEON=0 and LSERDY=0).
0: LSE oscillator not bypassed
1: LSE oscillator bypassed

Bit 1 **LSERDY**: LSE oscillator ready

Set and cleared by hardware to indicate when the external 32 kHz oscillator is stable. After the LSEON bit is cleared, LSERDY goes low after 6 external low-speed oscillator clock cycles.
0: LSE oscillator not ready
1: LSE oscillator ready

Bit 0 **LSEON**: LSE oscillator enable

Set and cleared by software.
0: LSE oscillator OFF
1: LSE oscillator ON

6.4.30 Control/status register (RCC_CSR)

Address: 0x94

Reset value: 0x0C00 0600, reset by system Reset, except reset flags by power Reset only.

Access: 0 ≤ wait state ≤ 3, word, half-word and byte access

Wait states are inserted in case of successive accesses to this register.

31	30	29	28	27	26	25	24	23	22	21	20	19	18	17	16
LPWR RSTF	WWDG RSTF	IWWG RSTF	SFT RSTF	BOR RSTF	PIN RSTF	OBL RSTF	FW RSTF	RMVF	Res.	Res.	Res.	Res.	Res.	Res.	Res.
r	r	r	r	r	r	r	r	rw							

15	14	13	12	11	10	9	8	7	6	5	4	3	2	1	0
Res.	Res.	Res.	Res.	MSISRANGE[3:0]				Res.	Res.	Res.	Res.	Res.	Res.	LSI RDY	LSION
				rw	rw	rw	rw							r	rw

Bit 31 **LPWRRSTF**: Low-power reset flag

Set by hardware when a reset occurs due to illegal Stop, Standby or Shutdown mode entry.
Cleared by writing to the RMVF bit.
0: No illegal mode reset occurred
1: Illegal mode reset occurred

Bit 30 **WWDGRSTF**: Window watchdog reset flag

Set by hardware when a window watchdog reset occurs.
Cleared by writing to the RMVF bit.
0: No window watchdog reset occurred
1: Window watchdog reset occurred

Bit 29 **IWDGRSTF**: Independent window watchdog reset flag

Set by hardware when an independent watchdog reset domain occurs.
Cleared by writing to the RMVF bit.
0: No independent watchdog reset occurred
1: Independent watchdog reset occurred

Bit 28 **SFTRSTF**: Software reset flag

Set by hardware when a software reset occurs.
Cleared by writing to the RMVF bit.
0: No software reset occurred
1: Software reset occurred

Bit 27 **BORRSTF**: BOR flag

Set by hardware when a BOR occurs.
Cleared by writing to the RMVF bit.
0: No BOR occurred
1: BOR occurred

Bit 26 **PINRSTF**: Pin reset flag

Set by hardware when a reset from the NRST pin occurs.
Cleared by writing to the RMVF bit.
0: No reset from NRST pin occurred
1: Reset from NRST pin occurred

Bit 25 **OBLRSTF**: Option byte loader reset flag

Set by hardware when a reset from the Option Byte loading occurs.
Cleared by writing to the RMVF bit.
0: No reset from Option Byte loading occurred
1: Reset from Option Byte loading occurred

Bit 24 **FWRSTF**: Firewall reset flag

Set by hardware when a reset from the firewall occurs.
Cleared by writing to the RMVF bit.
0: No reset from the firewall occurred
1: Reset from the firewall occurred

Bit 23 **RMVF**: Remove reset flag

Set by software to clear the reset flags.
0: No effect
1: Clear the reset flags

Bits 22:12 Reserved, must be kept at reset value.

Bits 11:8 **MSISRANGE[3:1]** MSI range after Standby mode

Set by software to chose the MSI frequency at startup. This range is used after exiting Standby mode until MSIRGSEL is set. After a pad or a power-on reset, the range is always 4 MHz. MSISRANGE can be written only when MSIRGSEL = ‘1’.

0100: Range 4 around 1 MHz
0101: Range 5 around 2 MHz
0101: Range 6 around 4 MHz (reset value)
0111: Range 7 around 8 MHz
others: Reserved

Note: Changing the MSISRANGE does not change the current MSI frequency.

Bits 7:2 Reserved, must be kept at reset value.

Bit 1 **LSIRDY**: LSI oscillator ready

Set and cleared by hardware to indicate when the LSI oscillator is stable. After the LSION bit is cleared, LSIRDY goes low after 3 LSI oscillator clock cycles. This bit can be set even if LSION = 0 if the LSI is requested by the Clock Security System on LSE, by the Independent Watchdog or by the RTC.

0: LSI oscillator not ready
1: LSI oscillator ready

Bit 0 **LSION**: LSI oscillator enable

Set and cleared by software.

0: LSI oscillator OFF
1: LSI oscillator ON

6.4.31 Clock recovery RC register (RCC_CRRCR)[a]

Address: 0x98

Reset value: 0x0000 XXX0 where X is factory-programmed.

Access: no wait state, word, half-word and byte access

31	30	29	28	27	26	25	24	23	22	21	20	19	18	17	16
Res.	Res.	Res.	Res.	Res.	Res.	Res.	Res.	Res.	Res.	Res.	Res.	Res.	Res.	Res.	Res.
15	14	13	12	11	10	9	8	7	6	5	4	3	2	1	0
HSI48CAL[8:0]									Res.	Res.	Res.	Res.	Res.	HSI48 RDY	HSI48 ON
r	r	r	r	r	r	r	r	r						r	rw

Bits 31:16 Reserved, must be kept at reset value

Bits 15:7 **HSI48CAL[8:0]**: HSI48 clock calibration

These bits are initialized at startup with the factory-programmed HSI48 calibration trim value. They are ready only.

a. Register is present on L496/L4A6 devices only.

Bits 6:2 Reserved, must be kept at reset value

Bit 1 **HSI48RDY**: HSI48 clock ready flag

Set by hardware to indicate that HSI48 oscillator is stable. This bit is set only when HSI48 is enabled by software by setting HSI48ON.

0: HSI48 oscillator not ready

1: HSI48 oscillator ready

Bit 0 **HSI48ON**: HSI48 clock enable

Set and cleared by software.

Cleared by hardware to stop the HSI48 when entering in Stop, Standby or Shutdown modes.

0: HSI48 oscillator OFF

1: HSI48 oscillator ON

6.4.32 Peripherals independent clock configuration register (RCC_CCIPR2)[a]

Address: 0x9C

Reset value: 0x0000 0000

Access: no wait state, word, half-word and byte access

Wait states are inserted in case of successive accesses to this register.

31	30	29	28	27	26	25	24	23	22	21	20	19	18	17	16
Res.	Res.	Res.	Res.	Res.	Res.	Res.	Res.	Res.	Res.	Res.	Res.	Res.	Res.	Res.	Res.

15	14	13	12	11	10	9	8	7	6	5	4	3	2	1	0
Res.	Res.	Res.	Res.	Res.	Res.	Res.	Res.	Res.	Res.	Res.	Res.	Res.	Res.	I2C4SEL[1:0]	
														r	rw

Bits 31:2 Reserved, must be kept at reset value.

Bits 1:0 **I2C4SEL[1:0]**: I2C4 clock source selection

These bits are set and cleared by software to select the I2C4 clock source.

00: PCLK selected as I2C4 clock

01: System clock (SYSCLK) selected as I2C4 clock

10: HSI16 clock selected as I2C4 clock

11: reserved

6.4.33 RCC register map

The following table gives the RCC register map and the reset values.

a. Register is present on L496/L4A6 devices only.

Table 34. RCC register map and reset values

Off-set	Register	31	30	29	28	27	26	25	24	23	22	21	20	19	18	17	16	15	14	13	12	11	10	9	8	7	6	5	4	3	2	1	0
0x00	**RCC_CR**	Res.	Res.	PLLSAI2RDY	PLLSAI2ON	PLLSAI1RDY	PLLSAI1ON	PLLRDY	PLLON	Res.	Res.	Res.	Res.	CSSON	HSEBYP	HSERDY	HSEON	Res.	Res.	Res.	Res.	HSIASFS	HSIRDY	HSIKERON	HSION	MSI RANGE [3:0]				MSIRGSEL	MSIPLLEN	MSIRDY	MSION
	Reset value			0	0	0	0	0	0					0	0	0	0					0	0	0	0	0	1	1	0	0	0	1	1
0x04	**RCC_ICSCR**	Res	HSITRIM[6:0]							HSICAL[7:0]								MSITRIM[7:0]								MSICAL[7:0]							
	Reset value(1)		0	0	1	0	0	0	0	x	x	x	x	x	x	x	x	0	0	0	0	0	0	0	0	x	x	x	x	x	x	x	x
	Reset value(2)		1	0	0	0	0	0	0	x	x	x	x	x	x	x	x	0	0	0	0	0	0	0	0	x	x	x	x	x	x	x	x
0x08	**RCC_CFGR**	Res.	MCOPRE [2:0]			MCOSEL [3:0]				Res.	Res.	Res.	Res.	Res.	Res.	Res.	Res.	STOPWUCK	Res.	PPRE2 [2:0]			PPRE1 [2:0]			HPRE[3:0]				SWS [1:0]		SW [1:0]	
	Reset value		0	0	0	0	0	0	0									0		0	0	0	0	0	0	0	0	0	0	0	0	0	0
0x0C	**RCC_PLL CFGR**	PLLPDIV[4:0]					PLLR [1:0]		PLLREN	Res.	PLL Q [1:0]		PLLQEN	Res.	Res.	PLLP	PLLPEN	Res.	PLLN [6:0]							Res.	PLLM [2:0]			Res.	Res.	PLL SRC [1:0]		
	Reset value	0	0	0	0	0	0	0	0		0	0	0			0	0		0	0	1	0	0	0	0		0	0	0			0	0
0x10	**RCC_ PLLSAI1 CFGR**	PLLSAI1PDIV [4:0]					PLL SAI1 R [1:0]		PLLSAI1REN	Res.	PLL SAI1 Q [1:0]		PLLSAI1QEN	Res.	Res.	PLLSAI1P	PLLSAI1PEN	Res.	PLLSAI1N [6:0]							Res.	Res.	Res.	Res.	Res.	Res.	Res.	Res.
	Reset value	0	0	0	0	0	0	0	0		0	0	0			0	0		0	0	1	0	0	0	0								
0x14	**RCC_ PLLSAI2 CFGR**	PLLSAI2PDIV [4:0]					PLL SAI2 R [1:0]		PLLSAI2REN	Res.	Res.	Res.	Res.	Res.	Res.	PLLSAI2P	PLLSAI2PEN	Res.	PLLSAI2N [6:0]							Res.	Res.	Res.	Res.	Res.	Res.	Res.	Res.
	Reset value	0	0	0	0	0	0	0	0							0	0		0	0	1	0	0	0	0								
0x18	**RCC_CIER**	Res.	Res.	Res.	Res.	Res.	Res.	Res.	Res.	Res.	Res.	Res.	Res.	Res.	Res.	Res.	Res.	Res.	Res.	Res.	Res.	Res.	HSI48RDYIE	LSECSSIE	Res.	PLLSAI2RDYIE	PLLSAI1RDYIE	PLLRDYIE	HSERDYIE	HSIRDYIE	MSIRDYIE	LSERDYIE	LSIRDYIE
	Reset value																						0	0		0	0	0	0	0	0	0	0
0x1C	**RCC_CIFR**	Res.	Res.	Res.	Res.	Res.	Res.	Res.	Res.	Res.	Res.	Res.	Res.	Res.	Res.	Res.	Res.	Res.	Res.	Res.	Res.	Res.	HSI48RDYF	LSECSSF	CSSF	PLLSAI2RDYF	PLLSAI1RDYF	PLLRDYF	HSERDYF	HSIRDYF	MSIRDYF	LSERDYF	LSIRDYF
	Reset value																						0	0	0	0	0	0	0	0	0	0	0

Table 34. RCC register map and reset values (continued)

Off-set	Register	31	30	29	28	27	26	25	24	23	22	21	20	19	18	17	16	15	14	13	12	11	10	9	8	7	6	5	4	3	2	1	0
0x20	RCC_CICR	Res.	Res.	Res.	Res.	Res.	Res.	Res.	Res.	Res.	Res.	Res.	Res.	Res.	Res.	Res.	Res.	Res.	Res.	Res.	Res.	Res.	HSI48RDYC	LSECSSC	CSSC	PLLSAI2RDYC	PLLSAI1RDYC	PLLRDYC	HSERDYC	HSIRDYC	MSIRDYC	LSERDYC	LSIRDYC
	Reset value																						0	0	0	0	0	0	0	0	0	0	0
0x28	RCC_ AHB1RSTR	Res.	Res.	Res.	Res.	Res.	Res.	Res.	Res.	Res.	Res.	Res.	Res.	Res.	Res.	DMA2DRST	TSCRST	Res.	Res.	Res.	CRCRST	Res.	Res.	Res.	FLASHRST	Res.	Res.	Res.	Res.	Res.	Res.	DMA2RST	DMA1RST
	Reset value															0	0				0				0							0	0
0x2C	RCC_ AHB2RSTR	Res.	Res.	Res.	Res.	Res.	Res.	Res.	Res.	Res.	Res.	Res.	Res.	Res.	RNGRST	HASHRST	AESRST	Res.	DCMIRST	ADCRST	OTGFSRST	Res.	Res.	Res.	GPIOIRST	GPIOHRST	GPIOGRST	GPIOFRST	GPIOERST	GPIODRST	GPIOCRST	GPIOBRST	GPIOARST
	Reset value														0	0	0		0	0	0				0	0	0	0	0	0	0	0	0
0x30	RCC_ AHB3RSTR	Res.	Res.	Res.	Res.	Res.	Res.	Res.	Res.	Res.	Res.	Res.	Res.	Res.	Res.	Res.	Res.	Res.	Res.	Res.	Res.	Res.	Res.	Res.	QSPIRST	Res.	Res.	Res.	Res.	Res.	Res.	Res.	FMCRST
	Reset value																								0								0
0x38	RCC_ APB1RSTR1	LPTIM1RST	OPAMPRST	DAC1RST	PWRRST	Res.	CAN2RST	CAN1RST	CRSRST	I2C3RST	I2C2RST	I2C1RST	UART5RST	UART4RST	USART3RST	USART2RST	Res.	SPI3RST	SPI2RST	Res.	Res.	Res.	Res.	LCDRST	Res.	Res.	Res.	TIM7RST	TIM6RST	TIM5RST	TIM4RST	TIM3RST	TIM2RST
	Reset value	0	0	0	0		0	0	0	0	0	0	0	0	0	0		0	0					0				0	0	0	0	0	0
0x3C	RCC_ APB1RSTR2	Res.	Res.	Res.	Res.	Res.	Res.	Res.	Res.	Res.	Res.	Res.	Res.	Res.	Res.	Res.	Res.	Res.	Res.	Res.	Res.	Res.	Res.	Res.	Res.	Res.	Res.	LPTIM2RST	Res.	Res.	SWPMI1RST	I2C4RST	LPUART1RST
	Reset value																											0			0	0	0
0x40	RCC_ APB2RSTR	Res.	Res.	Res.	Res.	Res.	Res.	Res.	DFSDM1RST	Res.	SAI2RST	SAI1RST	Res.	Res.	TIM17RST	TIM16RST	TIM15RST	Res.	USART1RST	TIM8RST	SPI1RST	TIM1RST	SDMMC1RST	Res.	Res.	Res.	Res.	Res.	Res.	Res.	Res.	Res.	SYSCFGRST
	Reset value								0		0	0			0	0	0		0	0	0	0	0										0
0x48	RCC_AHB1 ENR	Res.	Res.	Res.	Res.	Res.	Res.	Res.	Res.	Res.	Res.	Res.	Res.	Res.	Res.	DMA2DEN	TSCEN	Res.	Res.	Res.	CRCEN	Res.	Res.	Res.	FLASHEN	Res.	Res.	Res.	Res.	Res.	Res.	DMA2EN	DMA1EN
	Reset value															0	0				0				1							0	0

Table 34. RCC register map and reset values (continued)

Off-set	Register	31	30	29	28	27	26	25	24	23	22	21	20	19	18	17	16	15	14	13	12	11	10	9	8	7	6	5	4	3	2	1	0
0x4C	RCC_AHB2 ENR	Res.	Res.	Res.	Res.	Res.	Res.	Res.	Res.	Res.	Res.	Res.	Res.	Res.	RNGEN	HASHEN	AESEN	Res.	DCMIEN	ADCEN	OTGFSEN	Res.	Res.	Res.	GPIOIEN	GPIOHEN	GPIOGEN	GPIOFEN	GPIOEEN	GPIODEN	GPIOCEN	GPIOBEN	GPIOAEN
	Reset value														0	0	0		0	0	0				0	0	0	0	0	0	0	0	0
0x50	RCC_AHB3 ENR	Res.	Res.	Res.	Res.	Res.	Res.	Res.	Res.	Res.	Res.	Res.	Res.	Res.	Res.	Res.	Res.	Res.	Res.	Res.	Res.	Res.	Res.	Res.	QSPIEN	Res.	Res.	Res.	Res.	Res.	Res.	Res.	FMCEN
	Reset value																								0								0
0x58	RCC_ APB1ENR1	LPTIM1EN	OPAMPEN	DAC1EN	PWREN	Res.	USBFSENCAN2EN	CAN1EN	CRSEN	I2C3EN	I2C2EN	I2C1EN	UART5EN	UART4EN	USART3EN	USART2EN	Res.	SP3EN	SPI2EN	Res.	Res.	WWDGEN	RTCAPBEN	LCDEN	Res.	Res.	Res.	TIM7EN	TIM6EN	TIM5EN	TIM4EN	TIM3EN	TIM2EN
	Reset value(1)	0	0	0	0		0	0	0	0	0	0	0	0	0	0		0	0			0	0	0				0	0	0	0	0	0
	Reset value(2)	0	0	0	0		0	0	0	0	0	0	0	0	0	0		0	0			0	1	0				0	0	0	0	0	0
0x5C	RCC_ APB1ENR2	Res.	Res.	Res.	Res.	Res.	Res.	Res.	Res.	Res.	Res.	Res.	Res.	Res.	Res.	Res.	Res.	Res.	Res.	Res.	Res.	Res.	Res.	Res.	Res.	Res.	Res.	LPTIM2EN	Res.	Res.	SWPMI1EN	I2C4EN	LPUART1EN
	Reset value																											0			0	0	0
0x60	RCC_ APB2ENR	Res.	Res.	Res.	Res.	Res.	Res.	Res.	DFSDM1EN	Res.	SAI2EN	SAI1EN	Res.	Res.	TIM17EN	TIM16EN	TIM15EN	Res.	USART1EN	TIM8EN	SPI1EN	TIM1EN	SDMMC1EN	Res.	Res.	FWEN	Res.	Res.	Res.	Res.	Res.	Res.	SYSCFGEN
	Reset value								0		0	0			0	0	0		0	0	0	0	0			0							0
0x68	RCC_ AHB1SMENR	Res.	Res.	Res.	Res.	Res.	Res.	Res.	Res.	Res.	Res.	Res.	Res.	Res.	Res.	DMA2DSMEN	TSCSMEN	Res.	Res.	Res.	CRCSMEN	Res.	Res.	SRAM1SMEN	FLASHSMEN	Res.	Res.	Res.	Res.	Res.	Res.	DMA2SMEN	DMA1SMEN
	Reset value(1)															0	1				1			1	1							1	1
	Reset value(2)															1	1				1			1	1							1	1
0x6C	RCC_ AHB2SMENR	Res.	Res.	Res.	Res.	Res.	Res.	Res.	Res.	Res.	Res.	Res.	Res.	Res.	RNGSMEN	HASHSMEN	AESSMEN	Res.	DCMISMEN	ADCFSSMEN	OTGFSSMEN	Res.	Res.	SRAM2SMEN	GPIOISMEN	GPIOHSMEN	GPIOGSMEN	GPIOFSMEN	GPIOESMEN	GPIODSMEN	GPIOCSMEN	GPIOBSMEN	GPIOASMEN
	Reset value(1)														1	0	1		0	1	1			1	0	1	1	1	1	1	1	1	1
	Reset value(2)														1	1	1		1	1	1			1	1	1	1	1	1	1	1	1	1

Table 34. RCC register map and reset values (continued)

Off-set	Register	31	30	29	28	27	26	25	24	23	22	21	20	19	18	17	16	15	14	13	12	11	10	9	8	7	6	5	4	3	2	1	0
0x70	RCC_ AHB3SMENR	Res.	Res.	Res.	Res.	Res.	Res.	Res.	Res.	Res.	Res.	Res.	Res.	Res.	Res.	Res.	Res.	Res.	Res.	Res.	Res.	Res.	Res.	Res.	QSPISMEN	Res.	Res.	Res.	Res.	Res.	Res.	Res.	FMCSMEN
	Reset value																								1								1
0x78	RCC_ APB1SM ENR1	LPTIM1SMEN	OPAMPSMEN	DAC1SMEN	PWRSMEN	Res.	CAN2SMEN	CAN1SMEN	CRSSMEN	I2C3SMEN	I2C2SMEN	I2C1SMEN	UART5SMEN	UART4SMEN	USART3SMEN	USART2SMEN	Res.	SP3SMEN	SPI2SMEN	Res.	Res.	WWDGSMEN	Res.	LCDSMEN	Res.	Res.	Res.	TIM7SMEN	TIM6SMEN	TIM5SMEN	TIM4SMEN	TIM3SMEN	TIM2SMEN
	Reset value(1)	1	1	1	1		0	1	0	1	1	1	1	1	1	1		1	1			1		1				1	1	1	1	1	1
	Reset value(2)	1	1	1	1		1	1	1	1	1	1	1	1	1	1		1	1			1		1				1	1	1	1	1	1
0x7C	RCC_ APB1SM ENR2	Res.	Res.	Res.	Res.	Res.	Res.	Res.	Res.	Res.	Res.	Res.	Res.	Res.	Res.	Res.	Res.	Res.	Res.	Res.	Res.	Res.	Res.	Res.	Res.	Res.	Res.	LPTIM2SMEN	Res.	Res.	SWPMI1SMEN	I2C4SMEN	LPUART1SMEN
	Reset value(1)																											1			1	0	1
	Reset value(2)																											1			1	1	1
0x80	RCC_ APB2SMENR	Res.	Res.	Res.	Res.	Res.	Res.	Res.	DFSDM1SMEN	Res.	SAI2SMEN	SAI1SMEN	Res.	Res.	TIM17SMEN	TIM16SMEN	TIM15SMEN	Res.	USART1SMEN	TIM8SMEN	SPI1SMEN	TIM1SMEN	SDMMC1SMEN	Res.	Res.	Res.	Res.	Res.	Res.	Res.	Res.	Res.	SYSCFGSMEN
	Reset value								1		1	1			1	1	1		1	1	1	1	1										1
0x88	RCC_CCIPR	DFSDM1SEL	SWPMI1SEL	ADCSEL		CLK48SEL		SAI2SEL		SAI1SEL		LPTIM2SEL		LPTIM1SEL		I2C3SEL		I2C2SEL		I2C1SEL		LPUART1SEL		UART5SEL		UART4SEL		USART3SEL		USART2SEL		USART1SEL	
	Reset value	0	0	0	0	0	0	0	0	0	0	0	0	0	0	0	0	0	0	0	0	0	0	0	0	0	0	0	0	0	0	0	0
0x90	RCC_BDCR	Res.	Res.	Res.	Res.	Res.	Res.	LSCOSEL	LSCOEN	Res.	Res.	Res.	Res.	Res.	Res.	Res.	BDRST	RTCEN	Res.	Res.	Res.	Res.	Res.	RTC SEL [1:0]		Res.	LSECSSD	LSECSSON	LSE DRV [1:0]		LSEBYP	LSERDY	LSEON
	Reset value							0	0								0	0						0	0		0	0	0	0	0	0	0
0x94	RCC_CSR	LPWRRSTF	WWDGRSTF	IWDGRSTF	SFTRSTF	BORRSTF	PINRSTF	OBLRSTF	FIREWALLRSTF	RMVF	Res.	Res.	Res.	Res.	Res.	Res.	Res.	Res.	Res.	Res.	Res.	MSIS RANGE [3:0]				Res.	Res.	Res.	Res.	Res.	Res.	LSIRDY	LSION
	Reset value	0	0	0	0	0	0	0	0	0												0	1	1	0							0	0

Table 34. RCC register map and reset values (continued)

Off-set	Register	31	30	29	28	27	26	25	24	23	22	21	20	19	18	17	16	15	14	13	12	11	10	9	8	7	6	5	4	3	2	1	0
0x98	**RCC_CRRCR** (2)	Res.	Res.	Res.	Res.	Res.	Res.	Res.	Res.	Res.	Res.	Res.	Res.	Res.	Res.	Res.	Res.	HSI48CAL[8:0]									Res.	Res.	Res.	Res.	Res.	HSI48RDY	HSI48ON
	Reset value																	x	x	x	x	x	x	x	x	x						0	0
0x9C	**RCC_CCIPR2** (2)	Res.	Res.	Res.	Res.	Res.	Res.	Res.	Res.	Res.	Res.	Res.	Res.	Res.	Res.	Res.	Res.	Res.	Res.	Res.	Res.	Res.	Res.	Res.	Res.	Res.	Res.	Res.	Res.	Res.	Res.	I2C4 SEL [1:0]	
	Reset value																															0	0

1. Only for STM32L47x/L48x devices
2. Only for STM32L49x/L4Ax devices

Refer to *Section 2.2 on page 75* for the register boundary addresses.

7 Clock recovery system (CRS)

This section applies to STM32L49x/L4Ax devices only.

7.1 Introduction

The clock recovery system (CRS) is an advanced digital controller acting on the internal fine-granularity trimmable RC oscillator HSI48. The CRS provides powerful means for oscillator output frequency evaluation, based on comparison with a selectable synchronization signal. It is capable of doing automatic adjustment of oscillator trimming based on the measured frequency error value, while keeping the possibility of a manual trimming.

The CRS is ideally suited to provide a precise clock to the USB peripheral. In such case, the synchronization signal can be derived from the start-of-frame (SOF) packet signalization on the USB bus, which is sent by a USB host at 1 ms intervals.

The synchronization signal can also be derived from the LSE oscillator output or it can be generated by user software.

7.2 CRS main features

- Selectable synchronization source with programmable prescaler and polarity:
  - External pin
  - LSE oscillator output
  - USB SOF packet reception
- Possibility to generate synchronization pulses by software
- Automatic oscillator trimming capability with no need of CPU action
- Manual control option for faster start-up convergence
- 16-bit frequency error counter with automatic error value capture and reload
- Programmable limit for automatic frequency error value evaluation and status reporting
- Maskable interrupts/events:
  - Expected synchronization (ESYNC)
  - Synchronization OK (SYNCOK)
  - Synchronization warning (SYNCWARN)
  - Synchronization or trimming error (ERR)

7.3 CRS implementation

Table 35. CRS features

Feature	CRS1
TRIM width	6 bits

7.4 CRS functional description

7.4.1 CRS block diagram

Figure 21. CRS block diagram

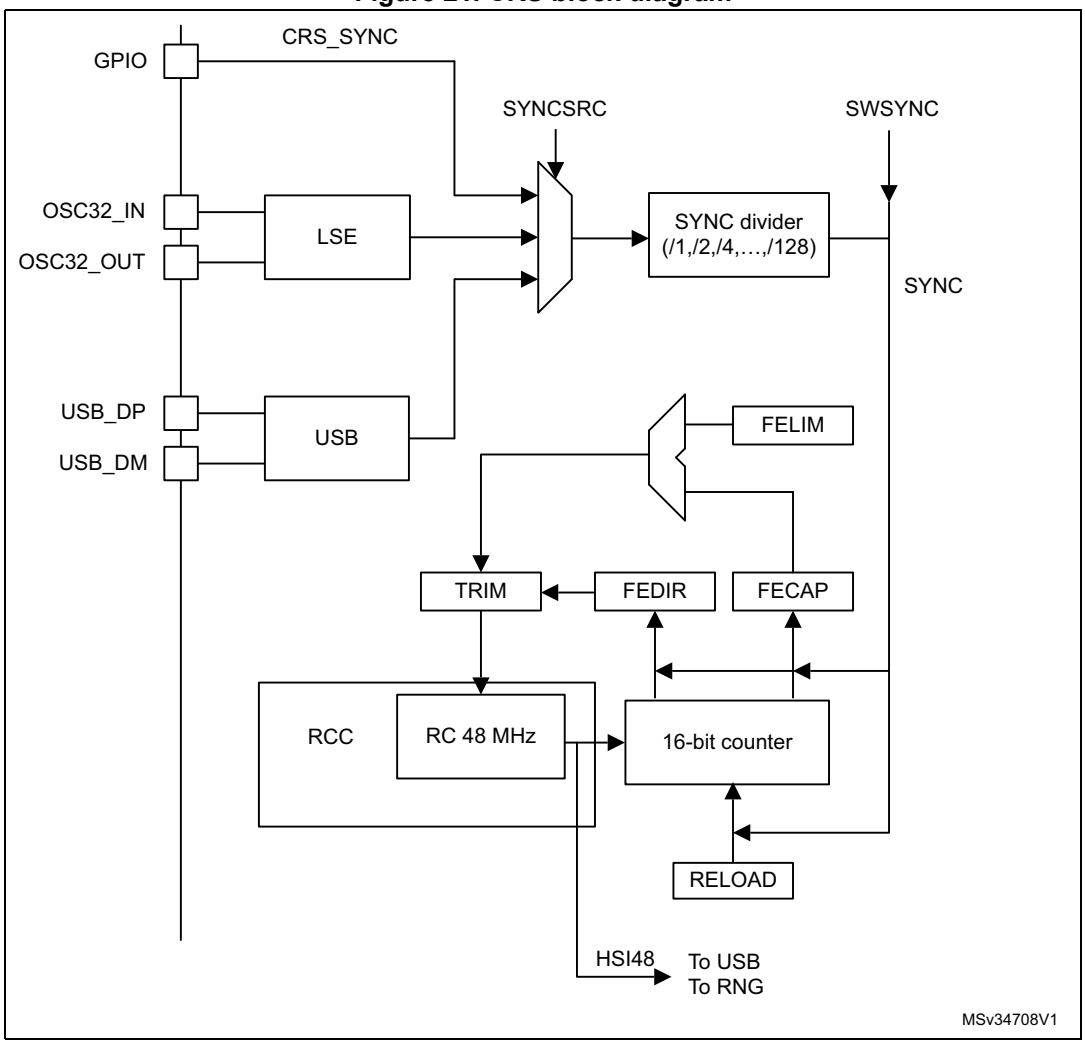

7.4.2 Synchronization input

The CRS synchronization (SYNC) source, selectable through the CRS_CFGR register, can be the signal from the LSE clock or the USB SOF signal. For a better robustness of the SYNC input, a simple digital filter (2 out of 3 majority votes, sampled by the RC48 clock) is implemented to filter out any glitches. This source signal also has a configurable polarity and can then be divided by a programmable binary prescaler to obtain a synchronization signal in a suitable frequency range (usually around 1 kHz).

For more information on the CRS synchronization source configuration, refer to *Section 7.7.2: CRS configuration register (CRS_CFGR)*.

It is also possible to generate a synchronization event by software, by setting the SWSYNC bit in the CRS_CR register.

7.4.3 Frequency error measurement

The frequency error counter is a 16-bit down/up counter which is reloaded with the RELOAD value on each SYNC event. It starts counting down till it reaches the zero value, where the ESYNC (expected synchronization) event is generated. Then it starts counting up to the OUTRANGE limit where it eventually stops (if no SYNC event is received) and generates a SYNCMISS event. The OUTRANGE limit is defined as the frequency error limit (FELIM field of the CRS_CFGR register) multiplied by 128.

When the SYNC event is detected, the actual value of the frequency error counter and its counting direction are stored in the FECAP (frequency error capture) field and in the FEDIR (frequency error direction) bit of the CRS_ISR register. When the SYNC event is detected during the downcounting phase (before reaching the zero value), it means that the actual frequency is lower than the target (and so, that the TRIM value must be incremented), while when it is detected during the upcounting phase it means that the actual frequency is higher (and that the TRIM value must be decremented).

Figure 22. CRS counter behavior

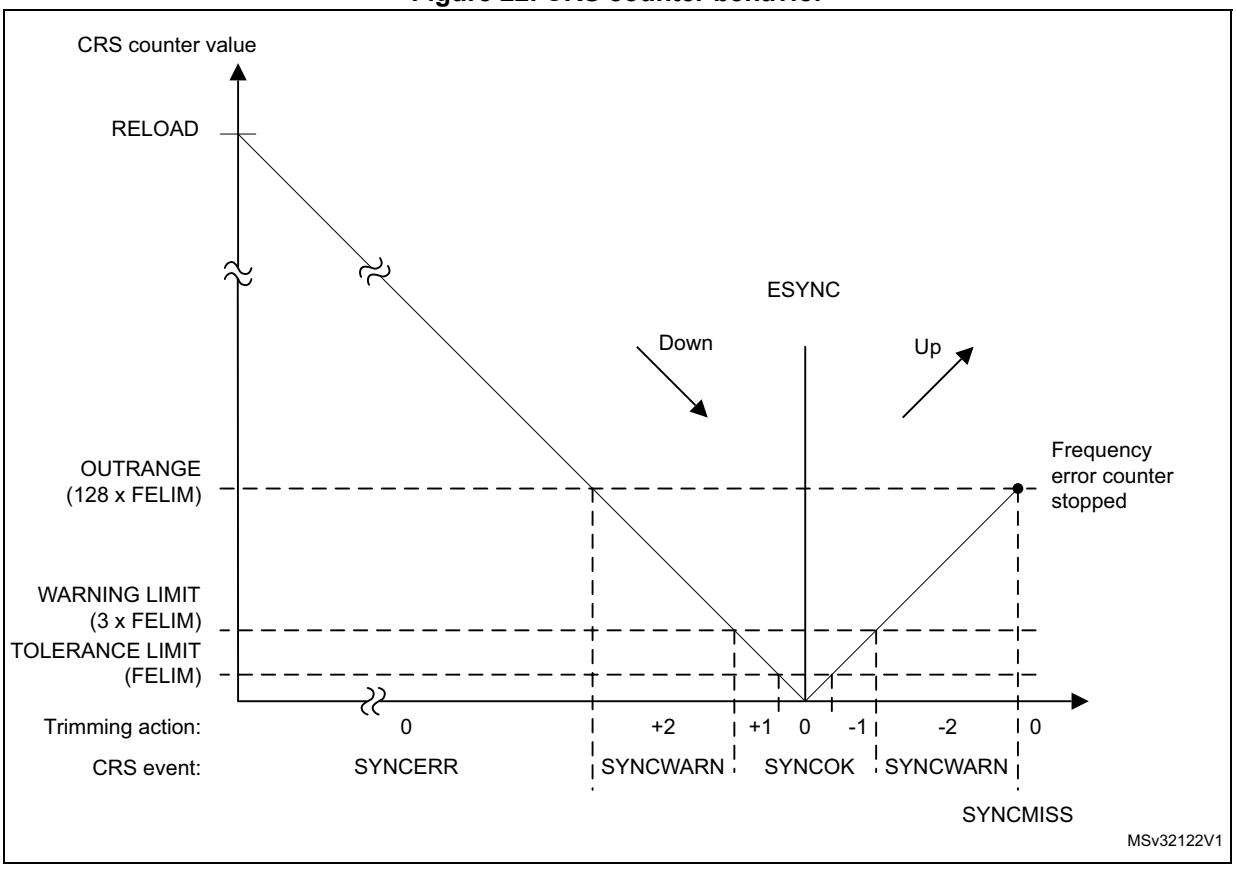

7.4.4 Frequency error evaluation and automatic trimming

The measured frequency error is evaluated by comparing its value with a set of limits:

- TOLERANCE LIMIT, given directly in the FELIM field of the CRS_CFGR register
- WARNING LIMIT, defined as 3 * FELIM value
- OUTRANGE (error limit), defined as 128 * FELIM value

The result of this comparison is used to generate the status indication and also to control the automatic trimming which is enabled by setting the AUTOTRIMEN bit in the CRS_CR register:

- When the frequency error is below the tolerance limit, it means that the actual trimming value in the TRIM field is the optimal one and that then, no trimming action is necessary.
  - SYNCOK status indicated
  - TRIM value not changed in AUTOTRIM mode
- When the frequency error is below the warning limit but above or equal to the tolerance limit, it means that some trimming action is necessary but that adjustment by one trimming step is enough to reach the optimal TRIM value.
  - SYNCOK status indicated
  - TRIM value adjusted by one trimming step in AUTOTRIM mode
- When the frequency error is above or equal to the warning limit but below the error limit, it means that a stronger trimming action is necessary, and there is a risk that the optimal TRIM value will not be reached for the next period.
  - SYNCWARN status indicated
  - TRIM value adjusted by two trimming steps in AUTOTRIM mode
- When the frequency error is above or equal to the error limit, it means that the frequency is out of the trimming range. This can also happen when the SYNC input is not clean or when some SYNC pulse is missing (for example when one USB SOF is corrupted).
  - SYNCERR or SYNCMISS status indicated
  - TRIM value not changed in AUTOTRIM mode

Note: If the actual value of the TRIM field is so close to its limits that the automatic trimming would force it to overflow or underflow, then the TRIM value is set just to the limit and the TRIMOVF status is indicated.

In AUTOTRIM mode (AUTOTRIMEN bit set in the CRS_CR register), the TRIM field of CRS_CR is adjusted by hardware and is read-only.

7.4.5 CRS initialization and configuration

RELOAD value

The RELOAD value must be selected according to the ratio between the target frequency and the frequency of the synchronization source after prescaling. It is then decreased by one in order to reach the expected synchronization on the zero value. The formula is the following:

$$RELOAD = (f_{TARGET} / f_{SYNC}) - 1$$

The reset value of the RELOAD field corresponds to a target frequency of 48 MHz and a synchronization signal frequency of 1 kHz (SOF signal from USB).

FELIM value

The selection of the FELIM value is closely coupled with the HSI48 oscillator characteristics and its typical trimming step size. The optimal value corresponds to half of the trimming step size, expressed as a number of HSI48 oscillator clock ticks. The following formula can be used:

$$FELIM = (f_{TARGET} / f_{SYNC}) * STEP[\%] / 100\% / 2$$

The result must be always rounded up to the nearest integer value to obtain the best trimming response. If frequent trimming actions are not needed in the application, the hysteresis can be increased by slightly increasing the FELIM value.

The reset value of the FELIM field corresponds to $(f_{TARGET} / f_{SYNC}) = 48000$ and to a typical trimming step size of 0.14%.

Caution: There is no hardware protection from a wrong configuration of the RELOAD and FELIM fields which can lead to an erratic trimming response. The expected operational mode requires proper setup of the RELOAD value (according to the synchronization source frequency), which is also greater than 128 * FELIM value (OUTRANGE limit).

7.5 CRS low-power modes

Table 36. Effect of low-power modes on CRS

Mode	Description
Sleep	No effect. CRS interrupts cause the device to exit the Sleep mode.
Stop	CRS registers are frozen. The CRS stops operating until the Stop mode is exited and the HSI48 oscillator restarted.
Standby	The CRS peripheral is powered down and must be reinitialized after exiting Standby mode.

7.6 CRS interrupts

Table 37. Interrupt control bits

Interrupt event	Event flag	Enable control bit	Clear flag bit
Expected synchronization	ESYNCF	ESYNCIE	ESYNCC
Synchronization OK	SYNCOKF	SYNCOKIE	SYNCOKC
Synchronization warning	SYNCWARNF	SYNCWARNIE	SYNCWARNC
Synchronization or trimming error (TRIMOVF, SYNCMISS, SYNCERR)	ERRF	ERRIE	ERRC

7.7 CRS registers

Refer to *Section 1.2 on page 69* for a list of abbreviations used in register descriptions.

The peripheral registers can be accessed only by words (32-bit).

7.7.1 CRS control register (CRS_CR)

Address offset: 0x00

Reset value: 0x0000 X000(X=4 for products supporting 7-bit TRIM width, otherwise X=2)

31	30	29	28	27	26	25	24	23	22	21	20	19	18	17	16
Res.	Res.	Res.	Res.	Res.	Res.	Res.	Res.	Res.	Res.	Res.	Res.	Res.	Res.	Res.	Res.
15	**14**	**13**	**12**	**11**	**10**	**9**	**8**	**7**	**6**	**5**	**4**	**3**	**2**	**1**	**0**
Res.	Res.	TRIM[5:0]						SW SYNC	AUTO TRIMEN	CEN	Res.	ESYNCIE	ERRIE	SYNC WARNIE	SYNC OKIE
		rw	rw	rw	rw	rw	rw	rt_w1	rw	rw		rw	rw	rw	rw

Bits 31:14 Reserved, must be kept at reset value.

Bits 13:8 **TRIM[5:0]**: HSI48 oscillator smooth trimming

These bits provide a user-programmable trimming value to the HSI48 oscillator. They can be programmed to adjust to variations in voltage and temperature that influence the frequency of the HSI48 oscillator.

The default value is 32, which corresponds to the middle of the trimming interval. The trimming step is specified in the product datasheet. A higher TRIM value corresponds to a higher output frequency.

When the AUTOTRIMEN bit is set, this field is controlled by hardware and is read-only.

Bit 7 **SWSYNC**: Generate software SYNC event

This bit is set by software in order to generate a software SYNC event. It is automatically cleared by hardware.

0: No action

1: A software SYNC event is generated.

Bit 6 **AUTOTRIMEN**: Automatic trimming enable

This bit enables the automatic hardware adjustment of TRIM bits according to the measured frequency error between two SYNC events. If this bit is set, the TRIM bits are read-only. The TRIM value can be adjusted by hardware by one or two steps at a time, depending on the measured frequency error value. Refer to *Section 7.4.4* for more details.

0: Automatic trimming disabled, TRIM bits can be adjusted by the user.

1: Automatic trimming enabled, TRIM bits are read-only and under hardware control.

Bit 5 **CEN**: Frequency error counter enable

This bit enables the oscillator clock for the frequency error counter.

0: Frequency error counter disabled

1: Frequency error counter enabled

When this bit is set, the CRS_CFGR register is write-protected and cannot be modified.

Bit 4 Reserved, must be kept at reset value.

Bit 3 **ESYNCIE**: Expected SYNC interrupt enable

0: Expected SYNC (ESYNCF) interrupt disabled

1: Expected SYNC (ESYNCF) interrupt enabled

Bit 2 **ERRIE**: Synchronization or trimming error interrupt enable
0: Synchronization or trimming error (ERRF) interrupt disabled
1: Synchronization or trimming error (ERRF) interrupt enabled

Bit 1 **SYNCWARNIE**: SYNC warning interrupt enable
0: SYNC warning (SYNCWARNF) interrupt disabled
1: SYNC warning (SYNCWARNF) interrupt enabled

Bit 0 **SYNCOKIE**: SYNC event OK interrupt enable
0: SYNC event OK (SYNCOKF) interrupt disabled
1: SYNC event OK (SYNCOKF) interrupt enabled

7.7.2 CRS configuration register (CRS_CFGR)

This register can be written only when the frequency error counter is disabled (CEN bit is cleared in CRS_CR). When the counter is enabled, this register is write-protected.

Address offset: 0x04

Reset value: 0x2022 BB7F

31	30	29	28	27	26	25	24	23	22	21	20	19	18	17	16
SYNCPOL	Res.	SYNCSRC[1:0]		Res.	SYNCDIV[2:0]			FELIM[7:0]							
rw		rw	rw		rw	rw	rw	rw	rw	rw	rw	rw	rw	rw	rw
15	14	13	12	11	10	9	8	7	6	5	4	3	2	1	0
RELOAD[15:0]															
rw	rw	rw	rw	rw	rw	rw	rw	rw	rw	rw	rw	rw	rw	rw	rw

Bit 31 **SYNCPOL**: SYNC polarity selection
This bit is set and cleared by software to select the input polarity for the SYNC signal source.
0: SYNC active on rising edge (default)
1: SYNC active on falling edge

Bit 30 Reserved, must be kept at reset value.

Bits 29:28 **SYNCSRC[1:0]**: SYNC signal source selection
These bits are set and cleared by software to select the SYNC signal source.
00: GPIO selected as SYNC signal source
01: LSE selected as SYNC signal source
10: USB SOF selected as SYNC signal source (default).
11: Reserved

Note: When using USB LPM (Link Power Management) and the device is in Sleep mode, the periodic USB SOF will not be generated by the host. No SYNC signal will therefore be provided to the CRS to calibrate the HSI48 oscillator on the run. To guarantee the required clock precision after waking up from Sleep mode, the LSE or reference clock on the GPIOs should be used as SYNC signal.

Bit 27 Reserved, must be kept at reset value.

Bits 26:24 **SYNCDIV[2:0]**: SYNC divider

These bits are set and cleared by software to control the division factor of the SYNC signal.
000: SYNC not divided (default)
001: SYNC divided by 2
010: SYNC divided by 4
011: SYNC divided by 8
100: SYNC divided by 16
101: SYNC divided by 32
110: SYNC divided by 64
111: SYNC divided by 128

Bits 23:16 **FELIM[7:0]**: Frequency error limit

FELIM contains the value to be used to evaluate the captured frequency error value latched in the FECAP[15:0] bits of the CRS_ISR register. Refer to *Section 7.4.4* for more details about FECAP evaluation.

Bits 15:0 **RELOAD[15:0]**: Counter reload value

RELOAD is the value to be loaded in the frequency error counter with each SYNC event. Refer to *Section 7.4.3* for more details about counter behavior.

7.7.3 CRS interrupt and status register (CRS_ISR)

Address offset: 0x08

Reset value: 0x0000 0000

31	30	29	28	27	26	25	24	23	22	21	20	19	18	17	16
FECAP[15:0]															
r	r	r	r	r	r	r	r	r	r	r	r	r	r	r	r
15	14	13	12	11	10	9	8	7	6	5	4	3	2	1	0
FEDIR	Res.	Res.	Res.	Res.	TRIM OVF	SYNC MISS	SYNC ERR	Res.	Res.	Res.	Res.	ESYNCF	ERRF	SYNC WARNF	SYNC OKF
r					r	r	r					r	r	r	r

Bits 31:16 **FECAP[15:0]**: Frequency error capture

FECAP is the frequency error counter value latched in the time of the last SYNC event. Refer to *Section 7.4.4* for more details about FECAP usage.

Bit 15 **FEDIR**: Frequency error direction

FEDIR is the counting direction of the frequency error counter latched in the time of the last SYNC event. It shows whether the actual frequency is below or above the target.
0: Upcounting direction, the actual frequency is above the target.
1: Downcounting direction, the actual frequency is below the target.

Bits 14:11 Reserved, must be kept at reset value.

Bit 10 **TRIMOVF**: Trimming overflow or underflow

This flag is set by hardware when the automatic trimming tries to over- or under-flow the TRIM value. An interrupt is generated if the ERRIE bit is set in the CRS_CR register. It is cleared by software by setting the ERRC bit in the CRS_ICR register.
0: No trimming error signalized
1: Trimming error signalized

Bit 9 **SYNCMISS**: SYNC missed

This flag is set by hardware when the frequency error counter reached value FELIM * 128 and no SYNC was detected, meaning either that a SYNC pulse was missed or that the frequency error is too big (internal frequency too high) to be compensated by adjusting the TRIM value, and that some other action has to be taken. At this point, the frequency error counter is stopped (waiting for a next SYNC) and an interrupt is generated if the ERRIE bit is set in the CRS_CR register. It is cleared by software by setting the ERRC bit in the CRS_ICR register.

0: No SYNC missed error signalized

1: SYNC missed error signalized

Bit 8 **SYNCERR**: SYNC error

This flag is set by hardware when the SYNC pulse arrives before the ESYNC event and the measured frequency error is greater than or equal to FELIM * 128. This means that the frequency error is too big (internal frequency too low) to be compensated by adjusting the TRIM value, and that some other action has to be taken. An interrupt is generated if the ERRIE bit is set in the CRS_CR register. It is cleared by software by setting the ERRC bit in the CRS_ICR register.

0: No SYNC error signalized

1: SYNC error signalized

Bits 7:4 Reserved, must be kept at reset value.

Bit 3 **ESYNCF**: Expected SYNC flag

This flag is set by hardware when the frequency error counter reached a zero value. An interrupt is generated if the ESYNCIE bit is set in the CRS_CR register. It is cleared by software by setting the ESYNCC bit in the CRS_ICR register.

0: No expected SYNC signalized

1: Expected SYNC signalized

Bit 2 **ERRF**: Error flag

This flag is set by hardware in case of any synchronization or trimming error. It is the logical OR of the TRIMOVF, SYNCMISS and SYNCERR bits. An interrupt is generated if the ERRIE bit is set in the CRS_CR register. It is cleared by software in reaction to setting the ERRC bit in the CRS_ICR register, which clears the TRIMOVF, SYNCMISS and SYNCERR bits.

0: No synchronization or trimming error signalized

1: Synchronization or trimming error signalized

Bit 1 **SYNCWARNF**: SYNC warning flag

This flag is set by hardware when the measured frequency error is greater than or equal to FELIM * 3, but smaller than FELIM * 128. This means that to compensate the frequency error, the TRIM value must be adjusted by two steps or more. An interrupt is generated if the SYNCWARNIE bit is set in the CRS_CR register. It is cleared by software by setting the SYNCWARNC bit in the CRS_ICR register.

0: No SYNC warning signalized

1: SYNC warning signalized

Bit 0 **SYNCOKF**: SYNC event OK flag

This flag is set by hardware when the measured frequency error is smaller than FELIM * 3. This means that either no adjustment of the TRIM value is needed or that an adjustment by one trimming step is enough to compensate the frequency error. An interrupt is generated if the SYNCOKIE bit is set in the CRS_CR register. It is cleared by software by setting the SYNCOKC bit in the CRS_ICR register.

0: No SYNC event OK signalized

1: SYNC event OK signalized

7.7.4 CRS interrupt flag clear register (CRS_ICR)

Address offset: 0x0C

Reset value: 0x0000 0000

31	30	29	28	27	26	25	24	23	22	21	20	19	18	17	16
Res.	Res.	Res.	Res.	Res.	Res.	Res.	Res.	Res.	Res.	Res.	Res.	Res.	Res.	Res.	Res.

15	14	13	12	11	10	9	8	7	6	5	4	3	2	1	0
Res.	Res.	Res.	Res.	Res.	Res.	Res.	Res.	Res.	Res.	Res.	Res.	ESYNCC	ERRC	SYNC WARNC	SYNC OKC
												rw	rw	rw	rw

Bits 31:4 Reserved, must be kept at reset value.

Bit 3 **ESYNCC**: Expected SYNC clear flag

Writing 1 to this bit clears the ESYNCF flag in the CRS_ISR register.

Bit 2 **ERRC**: Error clear flag

Writing 1 to this bit clears TRIMOVF, SYNCMISS and SYNCERR bits and consequently also the ERRF flag in the CRS_ISR register.

Bit 1 **SYNCWARNC**: SYNC warning clear flag

Writing 1 to this bit clears the SYNCWARNF flag in the CRS_ISR register.

Bit 0 **SYNCOKC**: SYNC event OK clear flag

Writing 1 to this bit clears the SYNCOKF flag in the CRS_ISR register.

7.7.5 CRS register map

Table 38. CRS register map and reset values

Offset	Register	31	30	29	28	27	26	25	24	23	22	21	20	19	18	17	16	15	14	13	12	11	10	9	8	7	6	5	4	3	2	1	0
0x00	**CRS_CR**	Res.	Res.	Res.	Res.	Res.	Res.	Res.	Res.	Res.	Res.	Res.	Res.	Res.	Res.	Res.	Res.	Res.	Res.	TRIM[5:0]						SWSYNC	AUTOTRIMEN	CEN	Res.	ESYNCIE	ERRIE	SYNCWARNIE	SYNCOKIE
	Reset value																			1	0	0	0	0	0	0	0	0	0	0	0	0	0
0x04	**CRS_CFGR**	SYNCPOL	Res.	SYNC SRC [1:0]		Res.	SYNC DIV [2:0]			FELIM[7:0]								RELOAD[15:0]															
	Reset value	0		1	0		0	0	0	0	0	1	0	0	0	1	0	1	0	1	1	1	0	1	1	0	1	1	1	1	1	1	1
0x08	**CRS_ISR**	FECAP[15:0]																FEDIR	Res.	Res.	Res.	Res.	TRIMOVF	SYNCMISS	SYNCERR	Res.	Res.	Res.	Res.	ESYNCF	ERRF	SYNCWARNF	SYNCOKF
	Reset value	0	0	0	0	0	0	0	0	0	0	0	0	0	0	0	0	0					0	0	0					0	0	0	0
0x0C	**CRS_ICR**	Res.	Res.	Res.	Res.	Res.	Res.	Res.	Res.	Res.	Res.	Res.	Res.	Res.	Res.	Res.	Res.	Res.	Res.	Res.	Res.	Res.	Res.	Res.	Res.	Res.	Res.	Res.	Res.	ESYNCC	ERRC	SYNCWARNC	SYNCOKC
	Reset value																													0	0	0	0

Refer to *Section 2.2 on page 75* for the register boundary addresses.

8 General-purpose I/Os (GPIO)

8.1 Introduction

Each general-purpose I/O port has four 32-bit configuration registers (GPIOx_MODER, GPIOx_OTYPER, GPIOx_OSPEEDR and GPIOx_PUPDR), two 32-bit data registers (GPIOx_IDR and GPIOx_ODR) and a 32-bit set/reset register (GPIOx_BSRR). In addition all GPIOs have a 32-bit locking register (GPIOx_LCKR) and two 32-bit alternate function selection registers (GPIOx_AFRH and GPIOx_AFRL).

8.2 GPIO main features

- Output states: push-pull or open drain + pull-up/down
- Output data from output data register (GPIOx_ODR) or peripheral (alternate function output)
- Speed selection for each I/O
- Input states: floating, pull-up/down, analog
- Input data to input data register (GPIOx_IDR) or peripheral (alternate function input)
- Bit set and reset register (GPIOx_ BSRR) for bitwise write access to GPIOx_ODR
- Locking mechanism (GPIOx_LCKR) provided to freeze the I/O port configurations
- Analog function
- Alternate function selection registers
- Fast toggle capable of changing every two clock cycles
- Highly flexible pin multiplexing allows the use of I/O pins as GPIOs or as one of several peripheral functions

8.3 GPIO implementation

On STM32L47x/L48x, up to 114 I/Os are available (from PA0 to PH1).

On STM32L49x/L4Ax, up to 136 I/Os are available (from PA0 to PI11).

8.4 GPIO functional description

Subject to the specific hardware characteristics of each I/O port listed in the datasheet, each port bit of the general-purpose I/O (GPIO) ports can be individually configured by software in several modes:

- Input floating
- Input pull-up
- Input-pull-down
- Analog
- Output open-drain with pull-up or pull-down capability
- Output push-pull with pull-up or pull-down capability
- Alternate function push-pull with pull-up or pull-down capability
- Alternate function open-drain with pull-up or pull-down capability

Each I/O port bit is freely programmable, however the I/O port registers have to be accessed as 32-bit words, half-words or bytes. The purpose of the GPIOx_BSRR register is to allow atomic read/modify accesses to any of the GPIOx_ODR registers. In this way, there is no risk of an IRQ occurring between the read and the modify access.

Figure 23 and *Figure 24* show the basic structures of a standard and a 5-Volt tolerant I/O port bit, respectively. *Table 39* gives the possible port bit configurations.

Figure 23. Basic structure of an I/O port bit

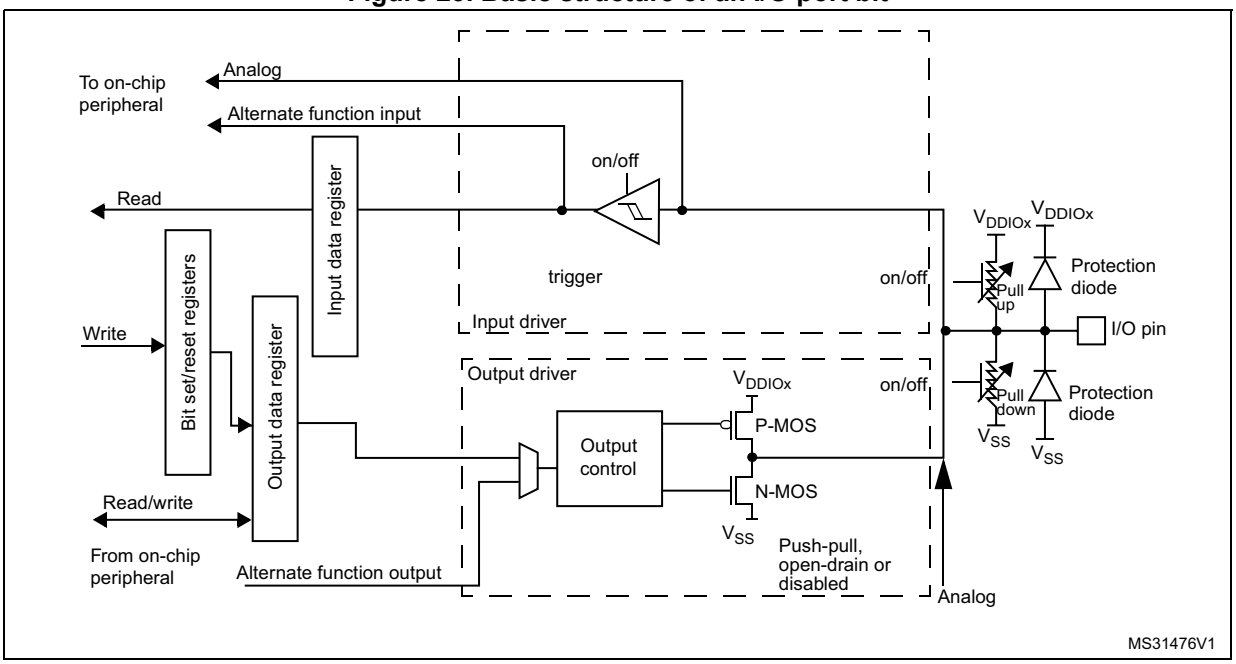

Figure 24. Basic structure of a 5-Volt tolerant I/O port bit

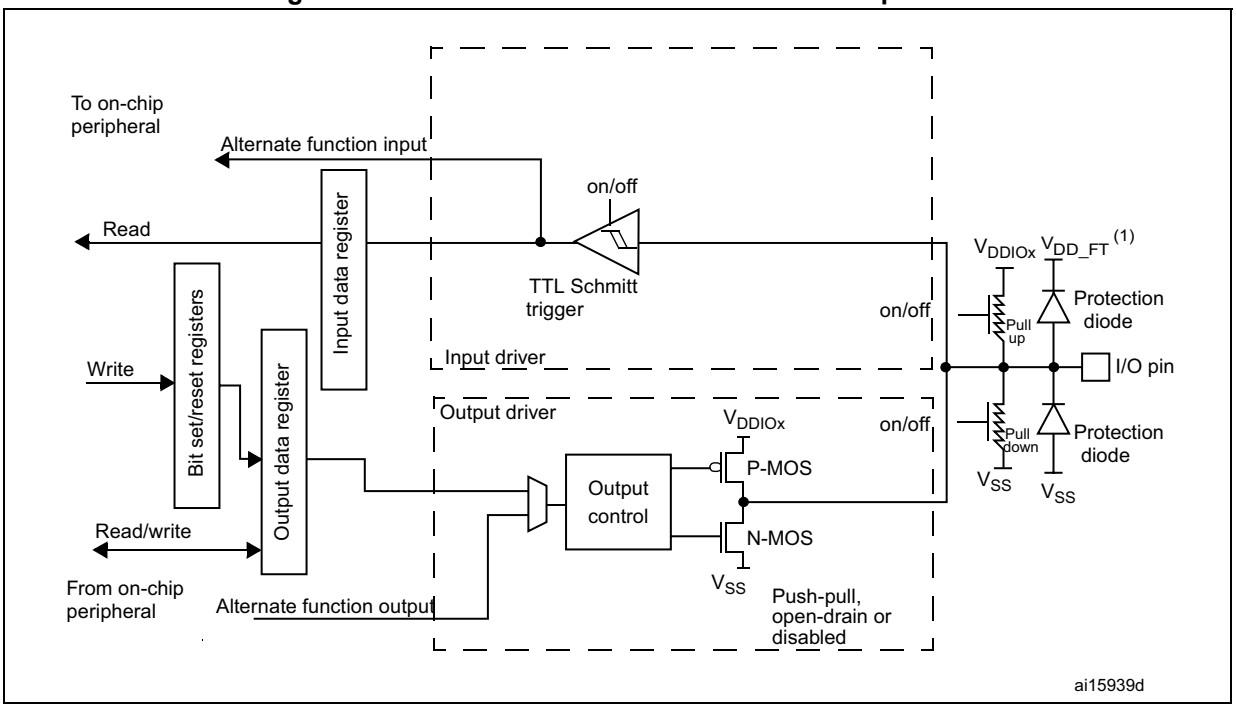

1. V_{DD_FT} is a potential specific to five-volt tolerant I/Os and different from V_{DD}.

Table 39. Port bit configuration table(1)

MODE(i) [1:0]	OTYPER(i)	OSPEED(i) [1:0]	PUPD(i) [1:0]		I/O configuration	
01	0	SPEED [1:0]	0	0	GP output	PP
	0		0	1	GP output	PP + PU
	0		1	0	GP output	PP + PD
	0		1	1	Reserved	
	1		0	0	GP output	OD
	1		0	1	GP output	OD + PU
	1		1	0	GP output	OD + PD
	1		1	1	Reserved (GP output OD)	
10	0	SPEED [1:0]	0	0	AF	PP
	0		0	1	AF	PP + PU
	0		1	0	AF	PP + PD
	0		1	1	Reserved	
	1		0	0	AF	OD
	1		0	1	AF	OD + PU
	1		1	0	AF	OD + PD
	1		1	1	Reserved	

Table 39. Port bit configuration table[1] (continued)

MODE(i) [1:0]	OTYPER(i)	OSPEED(i) [1:0]		PUPD(i) [1:0]		I/O configuration	
00	x	x	x	0	0	Input	Floating
	x	x	x	0	1	Input	PU
	x	x	x	1	0	Input	PD
	x	x	x	1	1	Reserved (input floating)	
11	x	x	x	0	0	Input/output	Analog
	x	x	x	0	1	Reserved	
	x	x	x	1	0		
	x	x	x	1	1		

1. GP = general-purpose, PP = push-pull, PU = pull-up, PD = pull-down, OD = open-drain, AF = alternate function.

8.4.1 General-purpose I/O (GPIO)

During and just after reset, the alternate functions are not active and most of the I/O ports are configured in analog mode.

The debug pins are in AF pull-up/pull-down after reset:

- PA15: JTDI in pull-up
- PA14: JTCK/SWCLK in pull-down
- PA13: JTMS/SWDAT in pull-up
- PB4: NJTRST in pull-up
- PB3: JTDO in floating state no pull-up/pull-down

On STM32L49x/L4Ax devices, PH3/BOOT0 is in input mode during the reset until at least the end of the option byte loading phase. See *Section 8.4.15: Using PH3 as GPIO (only for STM32L49x/L4Ax devices)*.

When the pin is configured as output, the value written to the output data register (GPIOx_ODR) is output on the I/O pin. It is possible to use the output driver in push-pull mode or open-drain mode (only the low level is driven, high level is HI-Z).

The input data register (GPIOx_IDR) captures the data present on the I/O pin at every AHB clock cycle.

All GPIO pins have weak internal pull-up and pull-down resistors, which can be activated or not depending on the value in the GPIOx_PUPDR register.

8.4.2 I/O pin alternate function multiplexer and mapping

The device I/O pins are connected to on-board peripherals/modules through a multiplexer that allows only one peripheral alternate function (AF) connected to an I/O pin at a time. In this way, there can be no conflict between peripherals available on the same I/O pin.

Each I/O pin (except PH3 for STM32L49x/L4Ax devices) has a multiplexer with up to sixteen alternate function inputs (AF0 to AF15) that can be configured through the GPIOx_AFRL (for pin 0 to 7) and GPIOx_AFRH (for pin 8 to 15) registers:

- After reset the multiplexer selection is alternate function 0 (AF0). The I/Os are configured in alternate function mode through GPIOx_MODER register.
- The specific alternate function assignments for each pin are detailed in the device datasheet.

In addition to this flexible I/O multiplexing architecture, each peripheral has alternate functions mapped onto different I/O pins to optimize the number of peripherals available in smaller packages.

To use an I/O in a given configuration, the user has to proceed as follows:

- **Debug function:** after each device reset these pins are assigned as alternate function pins immediately usable by the debugger host
- **GPIO:** configure the desired I/O as output, input or analog in the GPIOx_MODER register.
- **Peripheral alternate function:**
  - Connect the I/O to the desired AFx in one of the GPIOx_AFRL or GPIOx_AFRH register.
  - Select the type, pull-up/pull-down and output speed via the GPIOx_OTYPER, GPIOx_PUPDR and GPIOx_OSPEEDER registers, respectively.
  - Configure the desired I/O as an alternate function in the GPIOx_MODER register.
- **Additional functions:**
  - For the ADC, DAC, OPAMP and COMP, configure the desired I/O in analog mode in the GPIOx_MODER register and configure the required function in the ADC, DAC, OPAMP, and COMP registers. For the ADC, it is necessary to configure the GPIOx_ASCR register (only for STM32L47x/L48x).

    As indicated above, for the additional functions (such as DAC or OPAMP), the output is controlled by the corresponding peripheral. Care must be taken to select the I/O port analog function before enabling the additional function output in the peripheral control register.
  - For the additional functions like RTC, WKUPx and oscillators, configure the required function in the related RTC, PWR and RCC registers. These functions have priority over the configuration in the standard GPIO registers.

Refer to the “Alternate function mapping” table in the device datasheet for the detailed mapping of the alternate function I/O pins.

8.4.3 I/O port control registers

Each of the GPIO ports has four 32-bit memory-mapped control registers (GPIOx_MODER, GPIOx_OTYPER, GPIOx_OSPEEDR, GPIOx_PUPDR) to configure up to 16 I/Os. The GPIOx_MODER register is used to select the I/O mode (input, output, AF, analog). The GPIOx_OTYPER and GPIOx_OSPEEDR registers are used to select the output type (push-pull or open-drain) and speed. The GPIOx_PUPDR register is used to select the pull-up/pull-down whatever the I/O direction.

8.4.4 I/O port data registers

Each GPIO has two 16-bit memory-mapped data registers: input and output data registers (GPIOx_IDR and GPIOx_ODR). GPIOx_ODR stores the data to be output, it is read/write accessible. The data input through the I/O are stored into the input data register (GPIOx_IDR), a read-only register.

See *Section 8.5.5: GPIO port input data register (GPIOx_IDR) (x = A to I)* and *Section 8.5.6: GPIO port output data register (GPIOx_ODR) (x = A to I)* for the register descriptions.

8.4.5 I/O data bitwise handling

The bit set reset register (GPIOx_BSRR) is a 32-bit register which allows the application to set and reset each individual bit in the output data register (GPIOx_ODR). The bit set reset register has twice the size of GPIOx_ODR.

To each bit in GPIOx_ODR, correspond two control bits in GPIOx_BSRR: BS(i) and BR(i). When written to 1, bit BS(i) **sets** the corresponding ODR(i) bit. When written to 1, bit BR(i) **resets** the ODR(i) corresponding bit.

Writing any bit to 0 in GPIOx_BSRR does not have any effect on the corresponding bit in GPIOx_ODR. If there is an attempt to both set and reset a bit in GPIOx_BSRR, the set action takes priority.

Using the GPIOx_BSRR register to change the values of individual bits in GPIOx_ODR is a “one-shot” effect that does not lock the GPIOx_ODR bits. The GPIOx_ODR bits can always be accessed directly. The GPIOx_BSRR register provides a way of performing atomic bitwise handling.

There is no need for the software to disable interrupts when programming the GPIOx_ODR at bit level: it is possible to modify one or more bits in a single atomic AHB write access.

8.4.6 GPIO locking mechanism

It is possible to freeze the GPIO control registers by applying a specific write sequence to the GPIOx_LCKR register. The frozen registers are GPIOx_MODER, GPIOx_OTYPER, GPIOx_OSPEEDR, GPIOx_PUPDR, GPIOx_AFRL and GPIOx_AFRH.

To write the GPIOx_LCKR register, a specific write / read sequence has to be applied. When the right LOCK sequence is applied to bit 16 in this register, the value of LCKR[15:0] is used to lock the configuration of the I/Os (during the write sequence the LCKR[15:0] value must be the same). When the LOCK sequence has been applied to a port bit, the value of the port bit can no longer be modified until the next MCU reset or peripheral reset. Each GPIOx_LCKR bit freezes the corresponding bit in the control registers (GPIOx_MODER, GPIOx_OTYPER, GPIOx_OSPEEDR, GPIOx_PUPDR, GPIOx_AFRL and GPIOx_AFRH.

The LOCK sequence (refer to *Section 8.5.8: GPIO port configuration lock register (GPIOx_LCKR) (x = A to I)*) can only be performed using a word (32-bit long) access to the GPIOx_LCKR register due to the fact that GPIOx_LCKR bit 16 has to be set at the same time as the [15:0] bits.

For more details refer to LCKR register description in *Section 8.5.8: GPIO port configuration lock register (GPIOx_LCKR) (x = A to I)*.

8.4.7 I/O alternate function input/output

Two registers are provided to select one of the alternate function inputs/outputs available for each I/O. With these registers, the user can connect an alternate function to some other pin as required by the application.

This means that a number of possible peripheral functions are multiplexed on each GPIO using the GPIOx_AFRL and GPIOx_AFRH alternate function registers. The application can thus select any one of the possible functions for each I/O. The AF selection signal being common to the alternate function input and alternate function output, a single channel is selected for the alternate function input/output of a given I/O.

To know which functions are multiplexed on each GPIO pin, refer to the device datasheet.

8.4.8 External interrupt/wakeup lines

All ports have external interrupt capability. To use external interrupt lines, the port can be configured in input, output or alternate function mode (the port must not be configured in analog mode).

Refer to *Section 14: Extended interrupts and events controller (EXTI)* and to *Section 14.3.2: Wakeup event management.*

8.4.9 Input configuration

When the I/O port is programmed as input:

- The output buffer is disabled
- The Schmitt trigger input is activated
- The pull-up and pull-down resistors are activated depending on the value in the GPIOx_PUPDR register
- The data present on the I/O pin are sampled into the input data register every AHB clock cycle
- A read access to the input data register provides the I/O state

Figure 25 shows the input configuration of the I/O port bit.

Figure 25. Input floating/pull up/pull down configurations

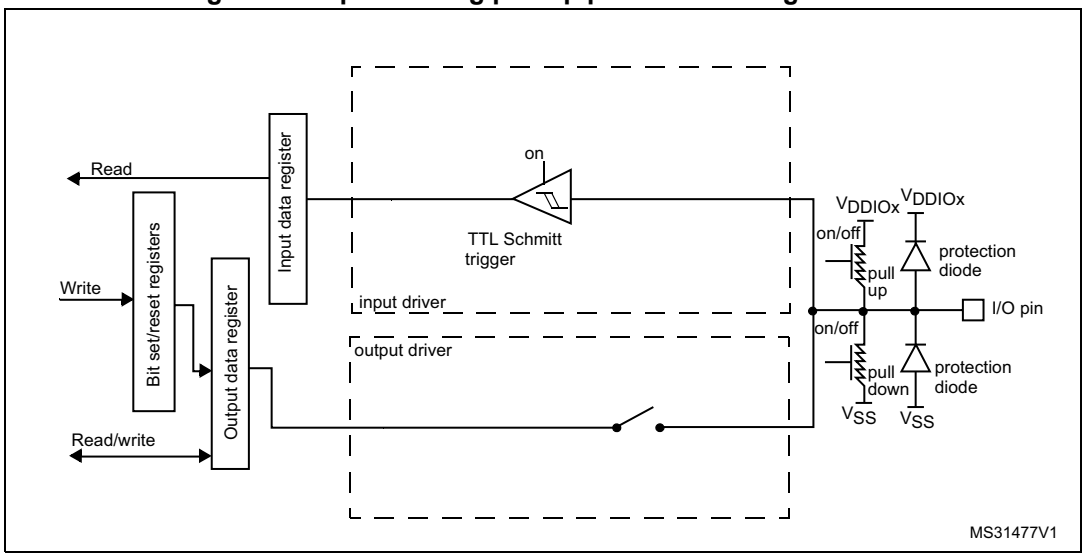

8.4.10 Output configuration

When the I/O port is programmed as output:

- The output buffer is enabled:
  - Open drain mode: A “0” in the Output register activates the N-MOS whereas a “1” in the Output register leaves the port in Hi-Z (the P-MOS is never activated)
  - Push-pull mode: A “0” in the Output register activates the N-MOS whereas a “1” in the Output register activates the P-MOS
- The Schmitt trigger input is activated
- The pull-up and pull-down resistors are activated depending on the value in the GPIOx_PUPDR register
- The data present on the I/O pin are sampled into the input data register every AHB clock cycle
- A read access to the input data register gets the I/O state
- A read access to the output data register gets the last written value

Figure 26 shows the output configuration of the I/O port bit.

Figure 26. Output configuration

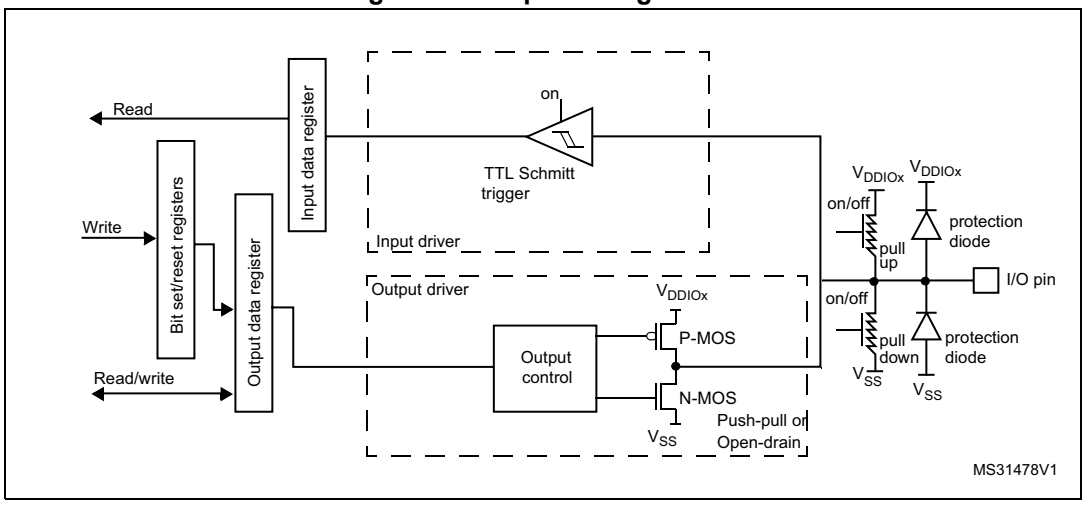

8.4.11 Alternate function configuration

When the I/O port is programmed as alternate function:

- The output buffer can be configured in open-drain or push-pull mode
- The output buffer is driven by the signals coming from the peripheral (transmitter enable and data)
- The Schmitt trigger input is activated
- The weak pull-up and pull-down resistors are activated or not depending on the value in the GPIOx_PUPDR register
- The data present on the I/O pin are sampled into the input data register every AHB clock cycle
- A read access to the input data register gets the I/O state

Note: The alternate function configuration described above is not applied when the selected alternate function is an LCD function or a SWPMI_IO. In this case, the I/O, programmed as an alternate function output, is configured as described in the analog configuration.

Figure 27 shows the Alternate function configuration of the I/O port bit.

Figure 27. Alternate function configuration

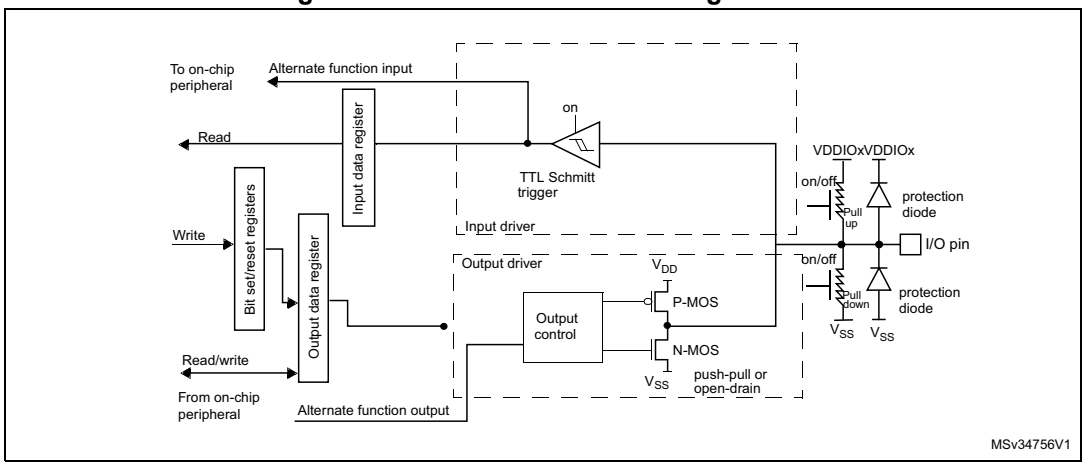

8.4.12 Analog configuration

When the I/O port is programmed as analog configuration:

- The output buffer is disabled
- The Schmitt trigger input is deactivated, providing zero consumption for every analog value of the I/O pin. The output of the Schmitt trigger is forced to a constant value (0).
- The weak pull-up and pull-down resistors are disabled by hardware
- Read access to the input data register gets the value “0”

Figure 28 shows the high-impedance, analog-input configuration of the I/O port bits.

Figure 28. High impedance-analog configuration

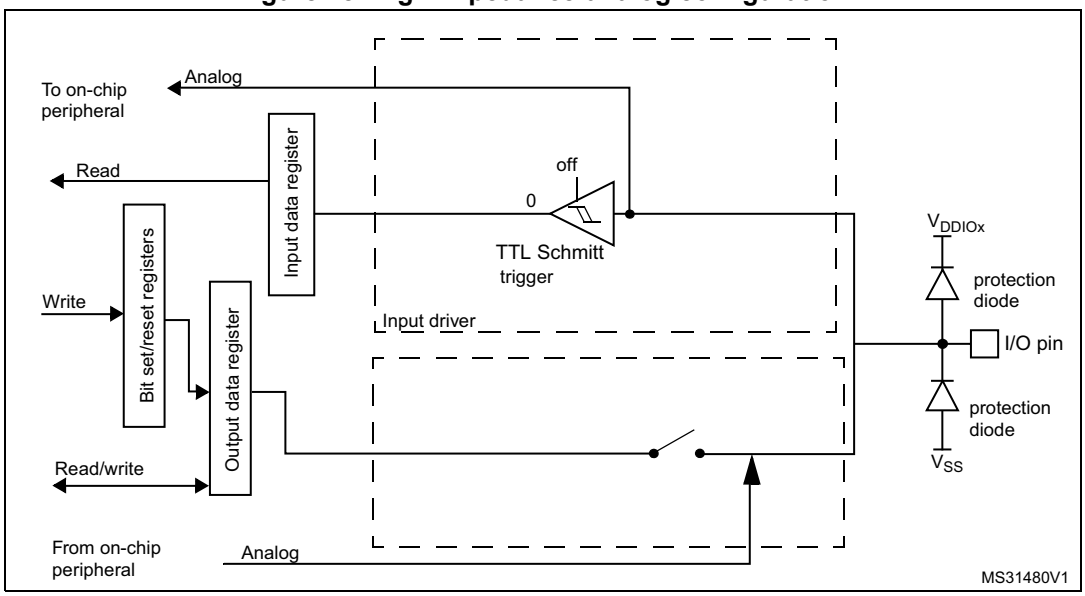

8.4.13 Using the HSE or LSE oscillator pins as GPIOs

When the HSE or LSE oscillator is switched OFF (default state after reset), the related oscillator pins can be used as normal GPIOs.

When the HSE or LSE oscillator is switched ON (by setting the HSEON or LSEON bit in the RCC_CSR register) the oscillator takes control of its associated pins and the GPIO configuration of these pins has no effect.

When the oscillator is configured in a user external clock mode, only the pin is reserved for clock input and the OSC_OUT or OSC32_OUT pin can still be used as normal GPIO.

8.4.14 Using the GPIO pins in the RTC supply domain

The PC13/PC14/PC15 GPIO functionality is lost when the core supply domain is powered off (when the device enters Standby mode). In this case, if their GPIO configuration is not bypassed by the RTC configuration, these pins are set in an analog input mode.

For details about I/O control by the RTC, refer to *Section 38.3: RTC functional description*.

8.4.15 Using PH3 as GPIO (only for STM32L49x/L4Ax devices)

PH3 may be used as boot pin (BOOT0) or as a GPIO. Depending on the nSWBOOT0 bit in the user option byte, it switches from the input mode to the analog input mode:

- After the option byte loading phase if nSWBOOT0 = 1.
- After reset if nSWBOOT0 = 0.

8.5 GPIO registers

This section gives a detailed description of the GPIO registers.

For a summary of register bits, register address offsets and reset values, refer to *Table 40*.

The peripheral registers can be written in word, half word or byte mode.

8.5.1 GPIO port mode register (GPIOx_MODER) (x =A to I)

Address offset:0x00

Reset value: 0xABFF FFFF (for port A)

Reset value: 0xFFFF FEBF (for port B)

On STM32L47x/L48x:

Reset value: 0xFFFF FFFF (for ports C..G)

Reset value: 0x0000 000F (for port H)

On STM32L49x/L4Ax:

Reset value: 0xFFFF FFFF (for ports C..H)

Reset value: 0x00FF FFFF (for port I)

31	30	29	28	27	26	25	24	23	22	21	20	19	18	17	16
MODE15[1:0]		MODE14[1:0]		MODE13[1:0]		MODE12[1:0]		MODE11[1:0]		MODE10[1:0]		MODE9[1:0]		MODE8[1:0]	
rw	rw	rw	rw	rw	rw	rw	rw	rw	rw	rw	rw	rw	rw	rw	rw
15	14	13	12	11	10	9	8	7	6	5	4	3	2	1	0
MODE7[1:0]		MODE6[1:0]		MODE5[1:0]		MODE4[1:0]		MODE3[1:0]		MODE2[1:0]		MODE1[1:0]		MODE0[1:0]	
rw	rw	rw	rw	rw	rw	rw	rw	rw	rw	rw	rw	rw	rw	rw	rw

Bits 31:0 **MODE[15:0][1:0]:** Port x configuration I/O pin y (y = 15 to 0)
These bits are written by software to configure the I/O mode.
00: Input mode
01: General purpose output mode
10: Alternate function mode
11: Analog mode (reset state)

8.5.2 GPIO port output type register (GPIOx_OTYPER) (x = A to I)

Address offset: 0x04

Reset value: 0x0000 0000

31	30	29	28	27	26	25	24	23	22	21	20	19	18	17	16
Res.	Res.	Res.	Res.	Res.	Res.	Res.	Res.	Res.	Res.	Res.	Res.	Res.	Res.	Res.	Res.
15	14	13	12	11	10	9	8	7	6	5	4	3	2	1	0
OT15	OT14	OT13	OT12	OT11	OT10	OT9	OT8	OT7	OT6	OT5	OT4	OT3	OT2	OT1	OT0
rw	rw	rw	rw	rw	rw	rw	rw	rw	rw	rw	rw	rw	rw	rw	rw

Bits 31:16 Reserved, must be kept at reset value.

Bits 15:0 **OT[15:0]:** Port x configuration I/O pin y (y = 15 to 0)
These bits are written by software to configure the I/O output type.
0: Output push-pull (reset state)
1: Output open-drain

8.5.3 GPIO port output speed register (GPIOx_OSPEEDR) (x = A to I)

Address offset: 0x08

Reset value: 0x0C00 0000 (for port A)

Reset value: 0x0000 0000 (for the other ports)

31	30	29	28	27	26	25	24	23	22	21	20	19	18	17	16
OSPEED15 [1:0]		OSPEED14 [1:0]		OSPEED13 [1:0]		OSPEED12 [1:0]		OSPEED11 [1:0]		OSPEED10 [1:0]		OSPEED9 [1:0]		OSPEED8 [1:0]	
rw	rw	rw	rw	rw	rw	rw	rw	rw	rw	rw	rw	rw	rw	rw	rw
15	14	13	12	11	10	9	8	7	6	5	4	3	2	1	0
OSPEED7 [1:0]		OSPEED6 [1:0]		OSPEED5 [1:0]		OSPEED4 [1:0]		OSPEED3 [1:0]		OSPEED2 [1:0]		OSPEED1 [1:0]		OSPEED0 [1:0]	
rw	rw	rw	rw	rw	rw	rw	rw	rw	rw	rw	rw	rw	rw	rw	rw

Bits 31:0 **OSPEED[15:0][1:0]**: Port x configuration I/O pin y (y = 15 to 0)
These bits are written by software to configure the I/O output speed.
00: Low speed
01: Medium speed
10: High speed
11: Very high speed

Note: Refer to the device datasheet for the frequency specifications and the power supply and load conditions for each speed..

8.5.4 GPIO port pull-up/pull-down register (GPIOx_PUPDR) (x = A to I)

Address offset: 0x0C

Reset value: 0x6400 0000 (for port A)

Reset value: 0x0000 0100 (for port B)

Reset value: 0x0000 0000 (for other ports)

31	30	29	28	27	26	25	24	23	22	21	20	19	18	17	16
PUPD15[1:0]		PUPD14[1:0]		PUPD13[1:0]		PUPD12[1:0]		PUPD11[1:0]		PUPD10[1:0]		PUPD9[1:0]		PUPD8[1:0]	
rw	rw	rw	rw	rw	rw	rw	rw	rw	rw	rw	rw	rw	rw	rw	rw
15	14	13	12	11	10	9	8	7	6	5	4	3	2	1	0
PUPD7[1:0]		PUPD6[1:0]		PUPD5[1:0]		PUPD4[1:0]		PUPD3[1:0]		PUPD2[1:0]		PUPD1[1:0]		PUPD0[1:0]	
rw	rw	rw	rw	rw	rw	rw	rw	rw	rw	rw	rw	rw	rw	rw	rw

Bits 31:0 **PUPD[15:0][1:0]:** Port x configuration I/O pin y (y = 15 to 0)
These bits are written by software to configure the I/O pull-up or pull-down
00: No pull-up, pull-down
01: Pull-up
10: Pull-down
11: Reserved

8.5.5 GPIO port input data register (GPIOx_IDR) (x = A to I)

Address offset: 0x10

Reset value: 0x0000 XXXX

31	30	29	28	27	26	25	24	23	22	21	20	19	18	17	16
Res.	Res.	Res.	Res.	Res.	Res.	Res.	Res.	Res.	Res.	Res.	Res.	Res.	Res.	Res.	Res.
15	14	13	12	11	10	9	8	7	6	5	4	3	2	1	0
ID15	ID14	ID13	ID12	ID11	ID10	ID9	ID8	ID7	ID6	ID5	ID4	ID3	ID2	ID1	ID0
r	r	r	r	r	r	r	r	r	r	r	r	r	r	r	r

Bits 31:16 Reserved, must be kept at reset value.

Bits 15:0 **ID[15:0]:** Port x input data I/O pin y (y = 15 to 0)
These bits are read-only. They contain the input value of the corresponding I/O port.

8.5.6 GPIO port output data register (GPIOx_ODR) (x = A to I)

Address offset: 0x14

Reset value: 0x0000 0000

31	30	29	28	27	26	25	24	23	22	21	20	19	18	17	16
Res.	Res.	Res.	Res.	Res.	Res.	Res.	Res.	Res.	Res.	Res.	Res.	Res.	Res.	Res.	Res.
15	14	13	12	11	10	9	8	7	6	5	4	3	2	1	0
OD15	OD14	OD13	OD12	OD11	OD10	OD9	OD8	OD7	OD6	OD5	OD4	OD3	OD2	OD1	OD0
rw	rw	rw	rw	rw	rw	rw	rw	rw	rw	rw	rw	rw	rw	rw	rw

Bits 31:16 Reserved, must be kept at reset value.

Bits 15:0 **OD[15:0]:** Port output data I/O pin y (y = 15 to 0)

These bits can be read and written by software.

Note: For atomic bit set/reset, the OD bits can be individually set and/or reset by writing to the GPIOx_BSRR register (x = A..FA to H).

8.5.7 GPIO port bit set/reset register (GPIOx_BSRR) (x = A to I)

Address offset: 0x18

Reset value: 0x0000 0000

31	30	29	28	27	26	25	24	23	22	21	20	19	18	17	16
BR15	BR14	BR13	BR12	BR11	BR10	BR9	BR8	BR7	BR6	BR5	BR4	BR3	BR2	BR1	BR0
w	w	w	w	w	w	w	w	w	w	w	w	w	w	w	w
15	14	13	12	11	10	9	8	7	6	5	4	3	2	1	0
BS15	BS14	BS13	BS12	BS11	BS10	BS9	BS8	BS7	BS6	BS5	BS4	BS3	BS2	BS1	BS0
w	w	w	w	w	w	w	w	w	w	w	w	w	w	w	w

Bits 31:16 **BR[15:0]:** Port x reset I/O pin y (y = 15 to 0)

These bits are write-only. A read to these bits returns the value 0x0000.

0: No action on the corresponding ODx bit
1: Resets the corresponding ODx bit

Note: If both BSx and BRx are set, BSx has priority.

Bits 15:0 **BS[15:0]:** Port x set I/O pin y (y = 15 to 0)

These bits are write-only. A read to these bits returns the value 0x0000.

0: No action on the corresponding ODx bit
1: Sets the corresponding ODx bit

8.5.8 GPIO port configuration lock register (GPIOx_LCKR) (x = A to I)

This register is used to lock the configuration of the port bits when a correct write sequence is applied to bit 16 (LCKK). The value of bits [15:0] is used to lock the configuration of the GPIO. During the write sequence, the value of LCKR[15:0] must not change. When the LOCK sequence has been applied on a port bit, the value of this port bit can no longer be modified until the next MCU reset or peripheral reset.

Note: A specific write sequence is used to write to the GPIOx_LCKR register. Only word access (32-bit long) is allowed during this locking sequence.

Each lock bit freezes a specific configuration register (control and alternate function registers).

Address offset: 0x1C

Reset value: 0x0000 0000

31	30	29	28	27	26	25	24	23	22	21	20	19	18	17	16
Res.	Res.	Res.	Res.	Res.	Res.	Res.	Res.	Res.	Res.	Res.	Res.	Res.	Res.	Res.	LCKK
															rw
15	14	13	12	11	10	9	8	7	6	5	4	3	2	1	0
LCK15	LCK14	LCK13	LCK12	LCK11	LCK10	LCK9	LCK8	LCK7	LCK6	LCK5	LCK4	LCK3	LCK2	LCK1	LCK0
rw	rw	rw	rw	rw	rw	rw	rw	rw	rw	rw	rw	rw	rw	rw	rw

Bits 31:17 Reserved, must be kept at reset value.

Bit 16 **LCKK:** Lock key

This bit can be read any time. It can only be modified using the lock key write sequence.

0: Port configuration lock key not active

1: Port configuration lock key active. The GPIOx_LCKR register is locked until the next MCU reset or peripheral reset.

LOCK key write sequence:

WR LCKR[16] = ‘1’ + LCKR[15:0]

WR LCKR[16] = ‘0’ + LCKR[15:0]

WR LCKR[16] = ‘1’ + LCKR[15:0]

RD LCKR

RD LCKR[16] = ‘1’ (this read operation is optional but it confirms that the lock is active)

Note: During the LOCK key write sequence, the value of LCK[15:0] must not change.

Any error in the lock sequence aborts the lock.

After the first lock sequence on any bit of the port, any read access on the LCKK bit returns ‘1’ until the next MCU reset or peripheral reset.

Bits 15:0 **LCK[15:0]:** Port x lock I/O pin y (y = 15 to 0)

These bits are read/write but can only be written when the LCKK bit is ‘0.

0: Port configuration not locked

1: Port configuration locked

8.5.9 GPIO alternate function low register (GPIOx_AFRL) (x = A to I)

Address offset: 0x20

Reset value: 0x0000 0000

31	30	29	28	27	26	25	24	23	22	21	20	19	18	17	16
AFSEL7[3:0]				AFSEL6[3:0]				AFSEL5[3:0]				AFSEL4[3:0]			
rw	rw	rw	rw	rw	rw	rw	rw	rw	rw	rw	rw	rw	rw	rw	rw
15	14	13	12	11	10	9	8	7	6	5	4	3	2	1	0
AFSEL3[3:0]				AFSEL2[3:0]				AFSEL1[3:0]				AFSEL0[3:0]			
rw	rw	rw	rw	rw	rw	rw	rw	rw	rw	rw	rw	rw	rw	rw	rw

Bits 31:0 **AFSEL[7:0][3:0]:** Alternate function selection for port x I/O pin y (y = 7 to 0)
These bits are written by software to configure alternate function I/Os.
0000: AF0
0001: AF1
0010: AF2
0011: AF3
0100: AF4
0101: AF5
0110: AF6
0111: AF7
1000: AF8
1001: AF9
1010: AF10
1011: AF11
1100: AF12
1101: AF13
1110: AF14
1111: AF15

8.5.10 GPIO alternate function high register (GPIOx_AFRH) (x = A to I)

Address offset: 0x24

Reset value: 0x0000 0000

31	30	29	28	27	26	25	24	23	22	21	20	19	18	17	16
AFSEL15[3:0]				AFSEL14[3:0]				AFSEL13[3:0]				AFSEL12[3:0]			
rw	rw	rw	rw	rw	rw	rw	rw	rw	rw	rw	rw	rw	rw	rw	rw
15	14	13	12	11	10	9	8	7	6	5	4	3	2	1	0
AFSEL11[3:0]				AFSEL10[3:0]				AFSEL9[3:0]				AFSEL8[3:0]			
rw	rw	rw	rw	rw	rw	rw	rw	rw	rw	rw	rw	rw	rw	rw	rw

Bits 31:0 **AFSEL[15:8][3:0]:** Alternate function selection for port x I/O pin y (y = 15 to 8)
These bits are written by software to configure alternate function I/Os.
0000: AF0
0001: AF1
0010: AF2
0011: AF3
0100: AF4
0101: AF5
0110: AF6
0111: AF7
1000: AF8
1001: AF9
1010: AF10
1011: AF11
1100: AF12
1101: AF13
1110: AF14
1111: AF15

8.5.11 GPIO port bit reset register (GPIOx_BRR) (x = A to I)

Address offset: 0x28

Reset value: 0x0000 0000

31	30	29	28	27	26	25	24	23	22	21	20	19	18	17	16
Res.	Res.	Res.	Res.	Res.	Res.	Res.	Res.	Res.	Res.	Res.	Res.	Res.	Res.	Res.	Res.
15	14	13	12	11	10	9	8	7	6	5	4	3	2	1	0
BR15	BR14	BR13	BR12	BR11	BR10	BR9	BR8	BR7	BR6	BR5	BR4	BR3	BR2	BR1	BR0
w	w	w	w	w	w	w	w	w	w	w	w	w	w	w	w

Bits 31:16 Reserved, must be kept at reset value.

Bits 15:0 **BR[15:0]:** Port x reset IO pin y (y = 15 to 0)
These bits are write-only. A read to these bits returns the value 0x0000.
0: No action on the corresponding ODx bit
1: Reset the corresponding ODx bit

8.5.12 GPIO port analog switch control register (GPIOx_ASCR)(x = A to H[a])

Address offset: 0x2C
Reset value: 0x0000 0000

31	30	29	28	27	26	25	24	23	22	21	20	19	18	17	16
Res.	Res.	Res.	Res.	Res.	Res.	Res.	Res.	Res.	Res.	Res.	Res.	Res.	Res.	Res.	Res.

15	14	13	12	11	10	9	8	7	6	5	4	3	2	1	0
ASC15	ASC14	ASC13	ASC12	ASC11	ASC10	ASC9	ASC8	ASC7	ASC6	ASC5	ASC4	ASC3	ASC2	ASC1	ASC0
rw	rw	rw	rw	rw	rw	rw	rw	rw	rw	rw	rw	rw	rw	rw	rw

Bits 31:16 Reserved, must be kept at reset value.

Bits 15:0 **ASC[15:0]:** Port x analog switch control I/O pin y (y= 15 to 0)

These bits are written by software to configure the analog connection of the IOs

0: Disconnect analog switch to the ADC input (reset state)

1: Connect analog switch to the ADC input

Note: This bis must be set prior to the ADC conversion.

Only the IO which connect to the ADC input are effective. Other IOs must keep their reset value

a. This register is only applicable to STM32L47x/L48x devices).

8.5.13 GPIO register map

The following table gives the GPIO register map and reset values.

Table 40. GPIO register map and reset values

Offset	Register name	31	30	29	28	27	26	25	24	23	22	21	20	19	18	17	16	15	14	13	12	11	10	9	8	7	6	5	4	3	2	1	0
0x00	**GPIOA_MODER**	MODE15[1:0]		MODE14[1:0]		MODE13[1:0]		MODE12[1:0]		MODE11[1:0]		MODE10[1:0]		MODE9[1:0]		MODE8[1:0]		MODE7[1:0]		MODE6[1:0]		MODE5[1:0]		MODE4[1:0]		MODE3[1:0]		MODE2[1:0]		MODE1[1:0]		MODE0[1:0]	
	Reset value	1	0	1	0	1	0	1	1	1	1	1	1	1	1	1	1	1	1	1	1	1	1	1	1	1	1	1	1	1	1	1	1
0x00	**GPIOB_MODER**	MODE15[1:0]		MODE14[1:0]		MODE13[1:0]		MODE12[1:0]		MODE11[1:0]		MODE10[1:0]		MODE9[1:0]		MODE8[1:0]		MODE7[1:0]		MODE6[1:0]		MODE5[1:0]		MODE4[1:0]		MODE3[1:0]		MODE2[1:0]		MODE1[1:0]		MODE0[1:0]	
	Reset value	1	1	1	1	1	1	1	1	1	1	1	1	1	1	1	1	1	1	1	1	1	1	1	0	1	0	1	1	1	1	1	1
0x00	**GPIOx_MODER** (where x = C..I)	MODE15[1:0]		MODE14[1:0]		MODE13[1:0]		MODE12[1:0]		MODE11[1:0]		MODE10[1:0]		MODE9[1:0]		MODE8[1:0]		MODE7[1:0]		MODE6[1:0]		MODE5[1:0]		MODE4[1:0]		MODE3[1:0]		MODE2[1:0]		MODE1[1:0]		MODE0[1:0]	
	Reset value	1	1	1	1	1	1	1	1	1	1	1	1	1	1	1	1	1	1	1	1	1	1	1	1	1	1	1	1	1	1	1	1
0x04	**GPIOx_OTYPER** (where x = A..I)	Res.	Res.	Res.	Res.	Res.	Res.	Res.	Res.	Res.	Res.	Res.	Res.	Res.	Res.	Res.	Res.	OT15	OT14	OT13	OT12	OT11	OT10	OT9	OT8	OT7	OT6	OT5	OT4	OT3	OT2	OT1	OT0
	Reset value																	0	0	0	0	0	0	0	0	0	0	0	0	0	0	0	0
0x08	**GPIOA_OSPEEDR**	OSPEED15[1:0]		OSPEED14[1:0]		OSPEED13[1:0]		OSPEED12[1:0]		OSPEED11[1:0]		OSPEED10[1:0]		OSPEED9[1:0]		OSPEED8[1:0]		OSPEED7[1:0]		OSPEED6[1:0]		OSPEED5[1:0]		OSPEED4[1:0]		OSPEED3[1:0]		OSPEED2[1:0]		OSPEED1[1:0]		OSPEED0[1:0]	
	Reset value	0	0	0	0	1	1	0	0	0	0	0	0	0	0	0	0	0	0	0	0	0	0	0	0	0	0	0	0	0	0	0	0
0x08	**GPIOx_OSPEEDR** (where x = B..H)	OSPEED15[1:0]		OSPEED14[1:0]		OSPEED13[1:0]		OSPEED12[1:0]		OSPEED11[1:0]		OSPEED10[1:0]		OSPEED9[1:0]		OSPEED8[1:0]		OSPEED7[1:0]		OSPEED6[1:0]		OSPEED5[1:0]		OSPEED4[1:0]		OSPEED3[1:0]		OSPEED2[1:0]		OSPEED1[1:0]		OSPEED0[1:0]	
	Reset value	0	0	0	0	0	0	0	0	0	0	0	0	0	0	0	0	0	0	0	0	0	0	0	0	0	0	0	0	0	0	0	0
0x0C	**GPIOA_PUPDR**	PUPD15[1:0]		PUPD14[1:0]		PUPD13[1:0]		PUPD12[1:0]		PUPD11[1:0]		PUPD10[1:0]		PUPD9[1:0]		PUPD8[1:0]		PUPD7[1:0]		PUPD6[1:0]		PUPD5[1:0]		PUPD4[1:0]		PUPD3[1:0]		PUPD2[1:0]		PUPD1[1:0]		PUPD0[1:0]	
	Reset value	0	1	1	0	0	1	0	0	0	0	0	0	0	0	0	0	0	0	0	0	0	0	0	0	0	0	0	0	0	0	0	0
0x0C	**GPIOB_PUPDR**	PUPD15[1:0]		PUPD14[1:0]		PUPD13[1:0]		PUPD12[1:0]		PUPD11[1:0]		PUPD10[1:0]		PUPD9[1:0]		PUPD8[1:0]		PUPD7[1:0]		PUPD6[1:0]		PUPD5[1:0]		PUPD4[1:0]		PUPD3[1:0]		PUPD2[1:0]		PUPD1[1:0]		PUPD0[1:0]	
	Reset value	0	0	0	0	0	0	0	0	0	0	0	0	0	0	0	0	0	0	0	0	0	0	0	1	0	0	0	0	0	0	0	0
0x0C	**GPIOx_PUPDR** (where x = C..I)	PUPD15[1:0]		PUPD14[1:0]		PUPD13[1:0]		PUPD12[1:0]		PUPD11[1:0]		PUPD10[1:0]		PUPD9[1:0]		PUPD8[1:0]		PUPD7[1:0]		PUPD6[1:0]		PUPD5[1:0]		PUPD4[1:0]		PUPD3[1:0]		PUPD2[1:0]		PUPD1[1:0]		PUPD0[1:0]	
	Reset value	0	0	0	0	0	0	0	0	0	0	0	0	0	0	0	0	0	0	0	0	0	0	0	0	0	0	0	0	0	0	0	0
0x10	**GPIOx_IDR** (where x = A..I)	Res.	Res.	Res.	Res.	Res.	Res.	Res.	Res.	Res.	Res.	Res.	Res.	Res.	Res.	Res.	Res.	ID15	ID14	ID13	ID12	ID11	ID10	ID9	ID8	ID7	ID6	ID5	ID4	ID3	ID2	ID1	ID0
	Reset value																	x	x	x	x	x	x	x	x	x	x	x	x	x	x	x	x

Table 40. GPIO register map and reset values (continued)

Offset	Register name	31	30	29	28	27	26	25	24	23	22	21	20	19	18	17	16	15	14	13	12	11	10	9	8	7	6	5	4	3	2	1	0
0x14	**GPIOx_ODR** (where x = A..I)	Res.	Res.	Res.	Res.	Res.	Res.	Res.	Res.	Res.	Res.	Res.	Res.	Res.	Res.	Res.	Res.	OD15	OD14	OD13	OD12	OD11	OD10	OD9	OD8	OD7	OD6	OD5	OD4	OD3	OD2	OD1	OD0
	Reset value																	0	0	0	0	0	0	0	0	0	0	0	0	0	0	0	0
0x18	**GPIOx_BSRR** (where x = A..I)	BR15	BR14	BR13	BR12	BR11	BR10	BR9	BR8	BR7	BR6	BR5	BR4	BR3	BR2	BR1	BR0	BS15	BS14	BS13	BS12	BS11	BS10	BS9	BS8	BS7	BS6	BS5	BS4	BS3	BS2	BS1	BS0
	Reset value	0	0	0	0	0	0	0	0	0	0	0	0	0	0	0	0	0	0	0	0	0	0	0	0	0	0	0	0	0	0	0	0
0x1C	**GPIOx_LCKR** (where x = A..I)	Res.	Res.	Res.	Res.	Res.	Res.	Res.	Res.	Res.	Res.	Res.	Res.	Res.	Res.	Res.	LCKK	LCK15	LCK14	LCK13	LCK12	LCK11	LCK10	LCK9	LCK8	LCK7	LCK6	LCK5	LCK4	LCK3	LCK2	LCK1	LCK0
	Reset value																0	0	0	0	0	0	0	0	0	0	0	0	0	0	0	0	0
0x20	**GPIOx_AFRL** (where x = A..I)	AFSEL7[3:0]				AFSEL6[3:0]				AFSEL5[3:0]				AFSEL4[3:0]				AFSEL3[3:0]				AFSEL2[3:0]				AFSEL1[3:0]				AFSEL0[3:0]			
	Reset value	0	0	0	0	0	0	0	0	0	0	0	0	0	0	0	0	0	0	0	0	0	0	0	0	0	0	0	0	0	0	0	0
0x24	**GPIOx_AFRH** (where x = A..I)	AFSEL15[3:0]				AFSEL14[3:0]				AFSEL13[3:0]				AFSEL12[3:0]				AFSEL11[3:0]				AFSEL10[3:0]				AFSEL9[3:0]				AFSEL8[3:0]			
	Reset value	0	0	0	0	0	0	0	0	0	0	0	0	0	0	0	0	0	0	0	0	0	0	0	0	0	0	0	0	0	0	0	0
0x28	**GPIOx_BRR** (where x = A..I))	Res.	Res.	Res.	Res.	Res.	Res.	Res.	Res.	Res.	Res.	Res.	Res.	Res.	Res.	Res.	Res.	BR15	BR14	BR13	BR12	BR11	BR10	BR9	BR8	BR7	BR6	BR5	BR4	BR3	BR2	BR1	BR0
	Reset value																	0	0	0	0	0	0	0	0	0	0	0	0	0	0	0	0
0x2C	**GPIOx_ASCR** (where x = A..H)	Res.	Res.	Res.	Res.	Res.	Res.	Res.	Res.	Res.	Res.	Res.	Res.	Res.	Res.	Res.	Res.	ASC15	ASC14	ASC13	ASC12	ASC11	ASC10	ASC9	ASC8	ASC7	ASC6	ASC5	ASC4	ASC3	ASC2	ASC1	ASC0
	Reset value																	0	0	0	0	0	0	0	0	0	0	0	0	0	0	0	0

Refer to *Section 2.2 on page 75* for the register boundary addresses.

9 System configuration controller (SYSCFG)

9.1 SYSCFG main features

The STM32L47x/L48x/L49x/L4Ax devices feature a set of configuration registers. The main purposes of the system configuration controller are the following:

- Remapping memory areas
- Managing the external interrupt line connection to the GPIOs
- Managing robustness feature
- Setting SRAM2 write protection and software erase
- Configuring FPU interrupts
- Enabling the firewall
- Enabling /disabling I^2C Fast-mode Plus driving capability on some I/Os and voltage booster for I/Os analog switches.

9.2 SYSCFG registers

9.2.1 SYSCFG memory remap register (SYSCFG_MEMRMP)

This register is used for specific configurations on memory remap.

Address offset: 0x00

Reset value: 0x0000 000X (X is the memory mode selected by the BOOT0 pin and BOOT1 option bit)

31	30	29	28	27	26	25	24	23	22	21	20	19	18	17	16
Res.	Res.	Res.	Res.	Res.	Res.	Res.	Res.	Res.	Res.	Res.	Res.	Res.	Res.	Res.	Res.
15	**14**	**13**	**12**	**11**	**10**	**9**	**8**	**7**	**6**	**5**	**4**	**3**	**2**	**1**	**0**
Res.	Res.	Res.	Res.	Res.	Res.	Res.	FB_ MODE	Res.	Res.	Res.	Res.	Res.	MEM_MODE[2:0]		
							rw						rw	rw	rw

Bits 31:9 Reserved, must be kept at reset value.

Bit 8 **FB_MODE:** Flash Bank mode selection

0: Flash Bank 1 mapped at 0x0800 0000 (and aliased @0x0000 0000(1)) and Flash Bank 2 mapped at 0x0808 0000 (and aliased at 0x0008 0000)

1: Flash Bank2 mapped at 0x0800 0000 (and aliased @0x0000 0000(1)) and Flash Bank 1 mapped at 0x0808 0000 (and aliased at 0x0008 0000)

Bits 7:3 Reserved, must be kept at reset value.

Bits 2:0 **MEM_MODE[2:0]:** Memory mapping selection

These bits control the memory internal mapping at address 0x0000 0000. These bits are used to select the physical remap by software and so, bypass the BOOT pin and the option bit setting. After reset these bits take the value selected by BOOT0 pin (or option bit for STM32L49x/L4Ax devices depending on nSWBOOT0 option bit) and BOOT1 option bit.

000: Main Flash memory mapped at 0x00000000[(1)].

001: System Flash memory mapped at 0x00000000.

010: FMC bank 1 (NOR/PSRAM 1 and 2) mapped at 0x00000000.

011: SRAM1 mapped at 0x00000000.

100: Reserved

101: Reserved

110: QUADSPI memory mapped at 0x00000000.

111: Reserved

1. When BFB2 bit is set, the system memory remains aliased at @0x0000 0000

Note: When the FSMC is remapped at address 0x0000 0000, only the first two regions of Bank 1 memory controller (Bank1 NOR/PSRAM 1 and NOR/PSRAM 2) can be remapped. In remap mode, the CPU can access the external memory via ICode bus instead of System bus which boosts up the performance.

9.2.2 SYSCFG configuration register 1 (SYSCFG_CFGR1)

Address offset: 0x04

Reset value: 0x7C00 0001

31	30	29	28	27	26	25	24	23	22	21	20	19	18	17	16
FPU_IE[5:0]						Res.	Res.	I2C4_FMP	I2C3_FMP	I2C2_FMP	I2C1_FMP	I2C_PB9_FMP	I2C_PB8_FMP	I2C_PB7_FMP	I2C_PB6_FMP
rw	rw	rw	rw	rw	rw			rw	rw	rw	rw	rw	rw	rw	rw

15	14	13	12	11	10	9	8	7	6	5	4	3	2	1	0
Res.	Res.	Res.	Res.	Res.	Res.	Res.	BOOSTEN	Res.	Res.	Res.	Res.	Res.	Res.	Res.	FWDIS
							rw								rc_w0

Bits 31:26 **FPU_IE[5:0]**: Floating Point Unit interrupts enable bits

FPU_IE[5]: Inexact interrupt enable

FPU_IE[4]: Input denormal interrupt enable

FPU_IE[3]: Overflow interrupt enable

FPU_IE[2]: underflow interrupt enable

FPU_IE[1]: Divide-by-zero interrupt enable

FPU_IE[0]: Invalid operation interrupt enable

Bits 25:24 Reserved, must be kept at reset value.

Bit 23 **I2C4_FMP**: Fast-mode Plus driving capability activation (this bit is only available on STM32L49x/L4Ax, keep at reset value for other devices)

This bit enables the Fm+ driving mode on I2C4 pins selected through AF selection bits.

0: Fm+ mode is not enabled on I2C4 pins selected through AF selection bits

1: Fm+ mode is enabled on I2C4 pins selected through AF selection bits.

Bit 22 **I2C3_FMP:** I2C3 Fast-mode Plus driving capability activation
This bit enables the Fm+ driving mode on I2C3 pins selected through AF selection bits.
0: Fm+ mode is not enabled on I2C3 pins selected through AF selection bits
1: Fm+ mode is enabled on I2C3 pins selected through AF selection bits.

Bit 21 **I2C2_FMP:** I2C2 Fast-mode Plus driving capability activation
This bit enables the Fm+ driving mode on I2C2 pins selected through AF selection bits.
0: Fm+ mode is not enabled on I2C2 pins selected through AF selection bits
1: Fm+ mode is enabled on I2C2 pins selected through AF selection bits.

Bit 20 **I2C1_FMP:** I2C1 Fast-mode Plus driving capability activation
This bit enables the Fm+ driving mode on I2C1 pins selected through AF selection bits.
0: Fm+ mode is not enabled on I2C1 pins selected through AF selection bits
1: Fm+ mode is enabled on I2C1 pins selected through AF selection bits.

Bit 19 **I2C_PB9_FMP**: Fast-mode Plus (Fm+) driving capability activation on PB9
This bit enables the Fm+ driving mode for PB9.
0: PB9 pin operates in standard mode.
1: Fm+ mode enabled on PB9 pin, and the Speed control is bypassed.

Bit 18 **I2C_PB8_FMP**: Fast-mode Plus (Fm+) driving capability activation on PB8
This bit enables the Fm+ driving mode for PB8.
0: PB8 pin operates in standard mode.
1: Fm+ mode enabled on PB8 pin, and the Speed control is bypassed.

Bit 17 **I2C_PB7_FMP**: Fast-mode Plus (Fm+) driving capability activation on PB7
This bit enables the Fm+ driving mode for PB7.
0: PB7 pin operates in standard mode.
1: Fm+ mode enabled on PB7 pin, and the Speed control is bypassed.

Bit 16 **I2C_PB6_FMP**: Fast-mode Plus (Fm+) driving capability activation on PB6
This bit enables the Fm+ driving mode for PB6.
0: PB6 pin operates in standard mode.
1: Fm+ mode enabled on PB6 pin, and the Speed control is bypassed.

Bits 15:9 Reserved, must be kept at reset value.

Bit 8 **BOOSTEN:** I/O analog switch voltage booster enable
0: I/O analog switches are supplied by V_{DDA} voltage. This is the recommended configuration when using the ADC in high V_{DDA} voltage operation.
1: I/O analog switches are supplied by a dedicated voltage booster (supplied by V_{DD}). This is the recommended configuration when using the ADC in low V_{DDA} voltage operation.

Bits 7:1 Reserved, must be kept at reset value.

Bit 0 **FWDIS:** Firewall disable
This bit is cleared by software to protect the access to the memory segments according to the Firewall configuration. Once enabled, the firewall cannot be disabled by software. Only a system reset set the bit.
0 : Firewall protection enabled
1 : Firewall protection disabled

9.2.3 SYSCFG external interrupt configuration register 1 (SYSCFG_EXTICR1)

Address offset: 0x08

Reset value: 0x0000 0000

31	30	29	28	27	26	25	24	23	22	21	20	19	18	17	16
Res.	Res.	Res.	Res.	Res.	Res.	Res.	Res.	Res.	Res.	Res.	Res.	Res.	Res.	Res.	Res.

15	14	13	12	11	10	9	8	7	6	5	4	3	2	1	0
EXTI3[3:0]				EXTI2[3:0]				EXTI1[3:0]				EXTI0[3:0]			
rw	rw	rw	rw	rw	rw	rw	rw	rw	rw	rw	rw	rw	rw	rw	rw

Bits 31:16 Reserved, must be kept at reset value.

Bits 15:12 **EXTI3[3:0]**: EXTI 3 configuration bits (EXTI3[3]) is only available on STM32L49x/L4Ax)
These bits are written by software to select the source input for the EXTI3 external interrupt.
0000: PA[3] pin
0001: PB[3] pin
0010: PC[3] pin
0011: PD[3] pin
0100: PE[3] pin
0101: PF[3] pin
0110: PG[3] pin
0111: PH[3] pin (only on STM32L49x/L4Ax devices)
1000: PI[3] pin (only for STM32L49x/L4Ax devices)

Bits 11:8 **EXTI2[3:0]**: EXTI 2 configuration bits (EXTI2[3]) is only available on STM32L49x/L4Ax)
These bits are written by software to select the source input for the EXTI2 external interrupt.
0000: PA[2] pin
0001: PB[2] pin
0010: PC[2] pin
0011: PD[2] pin
0100: PE[2] pin
0101: PF[2] pin
0110: PG[2] pin
0111: PH[2] pin (only on STM32L49x/L4Ax devices)
1000: PI[2] pin (only for STM32L49x/L4Ax devices)

Bits 7:4 **EXTI1[3:0]**: EXTI 1 configuration bits (EXTI1[3]) is only available on STM32L49x/L4Ax)
These bits are written by software to select the source input for the EXTI1 external interrupt.
0000: PA[1] pin
0001: PB[1] pin
0010: PC[1] pin
0011: PD[1] pin
0100: PE[1] pin
0101: PF[1] pin
0110: PG[1] pin
0111: PH[1] pin
1000: PI[1] pin (only for STM32L49x/L4Ax devices)

Bits 3:0 **EXTI0[3:0]**: EXTI 0 configuration bits (EXT0[3]) is only available on STM32L49x/L4Ax)
These bits are written by software to select the source input for the EXTI0 external interrupt.
0000: PA[0] pin
0001: PB[0] pin
0010: PC[0] pin
0011: PD[0] pin
0100: PE[0] pin
0101: PF[0] pin
0110: PG[0] pin
0111: PH[0] pin
1000: PI[0] pin (only for STM32L49x/L4Ax devices)

9.2.4 SYSCFG external interrupt configuration register 2 (SYSCFG_EXTICR2)

Address offset: 0x0C

Reset value: 0x0000 0000

31	30	29	28	27	26	25	24	23	22	21	20	19	18	17	16
Res.	Res.	Res.	Res.	Res.	Res.	Res.	Res.	Res.	Res.	Res.	Res.	Res.	Res.	Res.	Res.

15	14	13	12	11	10	9	8	7	6	5	4	3	2	1	0
EXTI7[3:0]				EXTI6[3:0]				EXTI5[3:0]				EXTI4[3:0]			
rw	rw	rw	rw	rw	rw	rw	rw	rw	rw	rw	rw	rw	rw	rw	rw

Bits 31:16 Reserved, must be kept at reset value.

Bits 15:12 **EXTI7[3:0]**: EXTI 7 configuration bits (EXTI7[3]) is only available on STM32L49x/L4Ax)
These bits are written by software to select the source input for the EXTI7 external interrupt.
0000: PA[7] pin
0001: PB[7] pin
0010: PC[7] pin
0011: PD[7] pin
0100: PE[7] pin
0101: PF[7] pin
0110: PG[7] pin
0111: PH[7] pin (only on STM32L49x/L4Ax devices)
1000: PI[7] pin (only for STM32L49x/L4Ax devices)

Bits 11:8 **EXTI6[3:0]**: EXTI 6 configuration bits (EXTI6[3]) is only available on STM32L49x/L4Ax)
These bits are written by software to select the source input for the EXTI6 external interrupt.
0000: PA[6] pin
0001: PB[6] pin
0010: PC[6] pin
0011: PD[6] pin
0100: PE[6] pin
0101: PF[6] pin
0110: PG[6] pin
0111: PH[6] pin (only on STM32L49x/L4Ax devices)
1000: PI[6] pin (only for STM32L49x/L4Ax devices)

Bits 7:4 **EXTI5[3:0]**: EXTI 5 configuration bits (EXTI5[3]) is only available on STM32L49x/L4Ax)
These bits are written by software to select the source input for the EXTI5 external interrupt.
0000: PA[5] pin
0001: PB[5] pin
0010: PC[5] pin
0011: PD[5] pin
0100: PE[5] pin
0101: PF[5] pin
0110: PG[5] pin
0111: PH[5] pin (only on STM32L49x/L4Ax devices)
1000: PI[5] pin (only for STM32L49x/L4Ax devices)

Bits 3:0 **EXTI4[3:0]**: EXTI 4 configuration bits (EXTI4[3]) is only available on STM32L49x/L4Ax)
These bits are written by software to select the source input for the EXTI4 external interrupt.
0000: PA[4] pin
0001: PB[4] pin
0010: PC[4] pin
0011: PD[4] pin
0100: PE[4] pin
0101: PF[4] pin
0110: PG[4] pin
0111: PH[4] pin (only on STM32L49x/L4Ax devices)
1000: PI[4] pin (only for STM32L49x/L4Ax devices)

Note: Some of the I/O pins mentioned in the above register may not be available on small packages.

9.2.5 SYSCFG external interrupt configuration register 3 (SYSCFG_EXTICR3)

Address offset: 0x10

Reset value: 0x0000 0000

31	30	29	28	27	26	25	24	23	22	21	20	19	18	17	16
Res.	Res.	Res.	Res.	Res.	Res.	Res.	Res.	Res.	Res.	Res.	Res.	Res.	Res.	Res.	Res.

15	14	13	12	11	10	9	8	7	6	5	4	3	2	1	0
EXTI11[3:0]				EXTI10[3:0]				EXTI9[3:0]				EXTI8[3:0]			
rw	rw	rw	rw	rw	rw	rw	rw	rw	rw	rw	rw	rw	rw	rw	rw

Bits 31:16 Reserved, must be kept at reset value.

Bits 15:12 **EXTI11[3:0]**: EXTI 11 configuration bits (EXTI11[3]) is only available on STM32L49x/L4Ax)

These bits are written by software to select the source input for the EXTI11 external interrupt.
0000: PA[11] pin
0001: PB[11] pin
0010: PC[11] pin
0011: PD[11] pin
0100: PE[11] pin
0101: PF[11] pin
0110: PG[11] pin
0111: PH[11] pin (only on STM32L49x/L4Ax devices)
1000: PI[11] pin (only for STM32L49x/L4Ax devices)

Bits 11:8 **EXTI10[3:0]**: EXTI 10 configuration bits

These bits are written by software to select the source input for the EXTI10 external interrupt.
0000: PA[10] pin
0001: PB[10] pin
0010: PC[10] pin
0011: PD[10] pin
0100: PE[10] pin
0101: PF[10] pin
0110: PG[10] pin
0111: PH[10] pin (only on STM32L49x/L4Ax devices)
1000: PI[10] pin (only for STM32L49x/L4Ax devices)

Bits 7:4 **EXTI9[3:0]**: EXTI 9 configuration bits (EXTI9[3]) is only available on STM32L49x/L4Ax)

These bits are written by software to select the source input for the EXTI9 external interrupt.
0000: PA[9] pin
0001: PB[9] pin
0010: PC[9] pin
0011: PD[9] pin
0100: PE[9] pin
0101: PF[9] pin
0110: PG[9] pin
0111: PH[9] pin (only on STM32L49x/L4Ax devices)
1000: PI[9] pin (only for STM32L49x/L4Ax devices)

Bits 3:0 **EXTI8[3:0]**: EXTI 8 configuration bits (EXTI8[3]) is only available on STM32L49x/L4Ax)

These bits are written by software to select the source input for the EXTI8 external interrupt.
0000: PA[8] pin
0001: PB[8] pin
0010: PC[8] pin
0011: PD[8] pin
0100: PE[8] pin
0101: PF[8] pin
0110: PG[8] pin
0111: PH[8] pin (only on STM32L49x/L4Ax devices)
1000: PI[8] pin (only for STM32L49x/L4Ax devices)

Note: Some of the I/O pins mentioned in the above register may not be available on small packages.

9.2.6 SYSCFG external interrupt configuration register 4 (SYSCFG_EXTICR4)

Address offset: 0x14

Reset value: 0x0000 0000

31	30	29	28	27	26	25	24	23	22	21	20	19	18	17	16
Res.	Res.	Res.	Res.	Res.	Res.	Res.	Res.	Res.	Res.	Res.	Res.	Res.	Res.	Res.	Res.
15	14	13	12	11	10	9	8	7	6	5	4	3	2	1	0
EXTI15[3:0]				EXTI14[3:0]				EXTI13[3:0]				EXTI12[3:0]			
rw	rw	rw	rw	rw	rw	rw	rw	rw	rw	rw	rw	rw	rw	rw	rw

Bits 31:16 Reserved, must be kept at reset value.

Bits 15:12 **EXTI15[3:0]**: EXTI 15 configuration bits (EXTI15[3]) is only available on STM32L49x/L4Ax)
These bits are written by software to select the source input for the EXTI15 external interrupt.
0000: PA[15] pin
0001: PB[15] pin
0010: PC[15] pin
0011: PD[15] pin
0100: PE[15] pin
0101: PF[15] pin
0110: PG[15] pin
0111: PH[15] pin (only on STM32L49x/L4Ax devices)
1000: Reserved

Bits 11:8 **EXTI14[3:0]**: EXTI 14 configuration bits (EXTI14[3]) is only available on STM32L49x/L4Ax)
These bits are written by software to select the source input for the EXTI14 external interrupt.
0000: PA[14] pin
0001: PB[14] pin
0010: PC[14] pin
0011: PD[14] pin
0100: PE[14] pin
0101: PF[14] pin
0110: PG[14] pin
0111: PH[14] pin (only on STM32L49x/L4Ax devices)
1000: Reserved

Bits 7:4 **EXTI13[3:0]**: EXTI 13 configuration bits (EXTI13[3]) is only available on STM32L49x/L4Ax)
These bits are written by software to select the source input for the EXTI13 external interrupt.
0000: PA[13] pin
0001: PB[13] pin
0010: PC[13] pin
0011: PD[13] pin
0100: PE[13] pin
0101: PF[13] pin
0110: PG[13] pin
0111: PH[13] pin (only on STM32L49x/L4Ax devices)
1000: Reserved

Bits 3:0 **EXTI12[3:0]**: EXTI 12 configuration bits (EXTI12[3]) is only available on STM32L49x/L4Ax)
These bits are written by software to select the source input for the EXTI12 external interrupt.
0000: PA[12] pin
0001: PB[12] pin
0010: PC[12] pin
0011: PD[12] pin
0100: PE[12] pin
0101: PF[12] pin
0110: PG[12] pin
0111: PH[12] pin (only on STM32L49x/L4Ax devices)
1000: Reserved

Note: Some of the I/O pins mentioned in the above register may not be available on small packages.

9.2.7 SYSCFG SRAM2 control and status register (SYSCFG_SCSR)

Address offset: 0x18

System reset value: 0x0000 0000

31	30	29	28	27	26	25	24	23	22	21	20	19	18	17	16
Res.	Res.	Res.	Res.	Res.	Res.	Res.	Res.	Res.	Res.	Res.	Res.	Res.	Res.	Res.	Res.
15	**14**	**13**	**12**	**11**	**10**	**9**	**8**	**7**	**6**	**5**	**4**	**3**	**2**	**1**	**0**
Res.	Res.	Res.	Res.	Res.	Res.	Res.	Res.	Res.	Res.	Res.	Res.	Res.	Res.	SRAM2 BSY	SRAM2 ER
														r	rw

Bits 31:2 Reserved, must be kept at reset value.

Bit 1 **SRAM2BSY:** SRAM2 busy by erase operation
0: No SRAM2 erase operation is on going.
1: SRAM2 erase operation is on going.

Bit 0 **SRAM2ER:** SRAM2 Erase
Setting this bit starts a hardware SRAM2 erase operation. This bit is automatically cleared at the end of the SRAM2 erase operation.

Note: This bit is write-protected: setting this bit is possible only after the correct key sequence is written in the SYSCFG_SKR register.

9.2.8 SYSCFG configuration register 2 (SYSCFG_CFGR2)

Address offset: 0x1C

System reset value: 0x0000 0000

31	30	29	28	27	26	25	24	23	22	21	20	19	18	17	16
Res.	Res.	Res.	Res.	Res.	Res.	Res.	Res.	Res.	Res.	Res.	Res.	Res.	Res.	Res.	Res.
15	**14**	**13**	**12**	**11**	**10**	**9**	**8**	**7**	**6**	**5**	**4**	**3**	**2**	**1**	**0**
Res.	Res.	Res.	Res.	Res.	Res.	Res.	SPF	Res.	Res.	Res.	Res.	ECCL	PVDL	SPL	CLL
							rc_w1					rs	rs	rs	rs

Bits 31:9 Reserved, must be kept at reset value.

Bit 8 **SPF**: SRAM2 parity error flag

This bit is set by hardware when an SRAM2 parity error is detected. It is cleared by software by writing '1'.

0: No SRAM2 parity error detected

1: SRAM2 parity error detected

Bits 7:4 Reserved, must be kept at reset value.

Bit 3 **ECCL**: ECC Lock

This bit is set by software and cleared only by a system reset. It can be used to enable and lock the Flash ECC error connection to TIM1/8/15/16/17 Break input.

0: ECC error disconnected from TIM1/8/15/16/17 Break input.

1: ECC error connected to TIM1/8/15/16/17 Break input.

Bit 2 **PVDL**: PVD lock enable bit

This bit is set by software and cleared only by a system reset. It can be used to enable and lock the PVD connection to TIM1/8/15/16/17 Break input, as well as the PVDE and PLS[2:0] in the PWR_CR2 register.

0: PVD interrupt disconnected from TIM1/8/15/16/17 Break input. PVDE and PLS[2:0] bits can be programmed by the application.

1: PVD interrupt connected to TIM1/8/15/16/17 Break input, PVDE and PLS[2:0] bits are read only.

Bit 1 **SPL**: SRAM2 parity lock bit

This bit is set by software and cleared only by a system reset. It can be used to enable and lock the SRAM2 parity error signal connection to TIM1/8/15/16/17 Break inputs.

0: SRAM2 parity error signal disconnected from TIM1/8/15/16/17 Break inputs

1: SRAM2 parity error signal connected to TIM1/8/15/16/17 Break inputs

Bit 0 **CLL:** Cortex®-M4 LOCKUP (Hardfault) output enable bit

This bit is set by software and cleared only by a system reset. It can be used to enable and lock the connection of Cortex®-M4 LOCKUP (Hardfault) output to TIM1/8/15/16/17 Break input

0: Cortex®-M4 LOCKUP output disconnected from TIM1/8/15/16/17 Break inputs

1: Cortex®-M4 LOCKUP output connected to TIM1/8/15/16/17 Break inputs

9.2.9 SYSCFG SRAM2 write protection register (SYSCFG_SWPR)

Address offset: 0x20

System reset value: 0x0000 0000

31	30	29	28	27	26	25	24	23	22	21	20	19	18	17	16
P31WP	P30WP	P29WP	P28WP	P27WP	P26WP	P25WP	P24WP	P23WP	P22WP	P21WP	P20WP	P19WP	P18WP	P17WP	P16WP
rs	rs	rs	rs	rs	rs	rs	rs	rs	rs	rs	rs	rs	rs	rs	rs
15	14	13	12	11	10	9	8	7	6	5	4	3	2	1	0
P15WP	P14WP	P13WP	P12WP	P11WP	P10WP	P9WP	P8WP	P7WP	P6WP	P5WP	P4WP	P3WP	P2WP	P1WP	P0WP
rs	rs	rs	rs	rs	rs	rs	rs	rs	rs	rs	rs	rs	rs	rs	rs

Bits 31:0 **PxWP:** SRAM2 page x write protection (x = 31 to 0)

These bits are set by software and cleared only by a system reset.

0: Write protection of SRAM2 page x is disabled.

1: Write protection of SRAM2 page x is enabled.

9.2.10 SYSCFG SRAM2 key register (SYSCFG_SKR)

Address offset: 0x24

System reset value: 0x0000 0000

31	30	29	28	27	26	25	24	23	22	21	20	19	18	17	16
Res.	Res.	Res.	Res.	Res.	Res.	Res.	Res.	Res.	Res.	Res.	Res.	Res.	Res.	Res.	Res.

15	14	13	12	11	10	9	8	7	6	5	4	3	2	1	0
Res.	Res.	Res.	Res.	Res.	Res.	Res.	Res.	KEY[7:0]							
								w	w	w	w	w	w	w	w

Bits 31:8 Reserved, must be kept at reset value.

Bits 7:0 **KEY[7:0]**: SRAM2 write protection key for software erase

The following steps are required to unlock the write protection of the SRAM2ER bit in the SYSCFG_CFGR2 register.

1. Write "0xCA” into Key[7:0]
2. Write "0x53” into Key[7:0]

Writing a wrong key reactivates the write protection.

9.2.11 SYSCFG SRAM2 write protection register 2 (SYSCFG_SWPR2)

This register applies only to STM32L49x/L4Ax devices.

Address offset: 0x28

System reset value: 0x0000 0000

31	30	29	28	27	26	25	24	23	22	21	20	19	18	17	16
P63WP	P62WP	P61WP	P60WP	P59WP	P58WP	P57WP	P56WP	P55WP	P54WP	P53WP	P52WP	P51WP	P50WP	P49WP	P48WP
rs	rs	rs	rs	rs	rs	rs	rs	rs	rs	rs	rs	rs	rs	rs	rs

15	14	13	12	11	10	9	8	7	6	5	4	3	2	1	0
P47WP	P46WP	P45WP	P44WP	P43WP	P42WP	P41WP	P40WP	P39WP	P38WP	P37WP	P36WP	P35WP	P34WP	P33WP	P32WP
rs	rs	rs	rs	rs	rs	rs	rs	rs	rs	rs	rs	rs	rs	rs	rs

Bits 31:0 **PxWP**: SRAM2 page x write protection (x = 63 to 32)

These bits are set by software and cleared only by a system reset.

0: Write protection of SRAM2 page x is disabled.

1: Write protection of SRAM2 page x is enabled.

9.2.12 SYSCFG register map

The following table gives the SYSCFG register map and the reset values.

Table 41. SYSCFG register map and reset values

Offset	Register	31	30	29	28	27	26	25	24	23	22	21	20	19	18	17	16	15	14	13	12	11	10	9	8	7	6	5	4	3	2	1	0
0x00	SYSCFG_ MEMRMP	Res.	Res.	Res.	Res.	Res.	Res.	Res.	Res.	Res.	Res.	Res.	Res.	Res.	Res.	Res.	Res.	Res.	Res.	Res.	Res.	Res.	Res.	Res.	FB_MODE	Res.	Res.	Res.	Res.	Res.	MEM_ MODE		
	Reset value																								0						x	x	x
0x04	SYSCFG_CFGR1	FPU_IE[5..0]						Res.	Res.	I2C4_FMP	I2C3_FMP	I2C2_FMP	I2C1_FMP	I2C_PB9_FMP	I2C_PB8_FMP	I2C_PB7_FMP	I2C_PB6_FMP	Res.	Res.	Res.	Res.	Res.	Res.	Res.	BOOSTEN	Res.	Res.	Res.	Res.	Res.	Res.	Res.	FWDIS
	Reset value	0	1	1	1	1	1			0	0	0	0	0	0	0	0								0					0	0	0	1
0x08	SYSCFG_EXTICR1	Res.	Res.	Res.	Res.	Res.	Res.	Res.	Res.	Res.	Res.	Res.	Res.	Res.	Res.	Res.	Res.	EXTI3 [3:0]				EXTI2 [3:0]				EXTI1 [3:0]				EXTI0 [3:0]			
	Reset value																	0	0	0	0	0	0	0	0	0	0	0	0	0	0	0	0
0x0C	SYSCFG_EXTICR2	Res.	Res.	Res.	Res.	Res.	Res.	Res.	Res.	Res.	Res.	Res.	Res.	Res.	Res.	Res.	Res.	EXTI7 [3:0]				EXTI6 [3:0]				EXTI5 [3:0]				EXTI4 [3:0]			
	Reset value																	0	0	0	0	0	0	0	0	0	0	0	0	0	0	0	0
0x10	SYSCFG_EXTICR3	Res.	Res.	Res.	Res.	Res.	Res.	Res.	Res.	Res.	Res.	Res.	Res.	Res.	Res.	Res.	Res.	EXTI11 [3:0]				EXTI10 [3:0]				EXTI9 [3:0]				EXTI8 [3:0]			
	Reset value																	0	0	0	0	0	0	0	0	0	0	0	0	0	0	0	0
0x14	SYSCFG_EXTICR4	Res.	Res.	Res.	Res.	Res.	Res.	Res.	Res.	Res.	Res.	Res.	Res.	Res.	Res.	Res.	Res.	EXTI15 [3:0]				EXTI14 [3:0]				EXTI13 [3:0]				EXTI12 [3:0]			
	Reset value																	0	0	0	0	0	0	0	0	0	0	0	0	0	0	0	0
0x18	SYSCFG_SCSR	Res.	Res.	Res.	Res.	Res.	Res.	Res.	Res.	Res.	Res.	Res.	Res.	Res.	Res.	Res.	Res.	Res.	Res.	Res.	Res.	Res.	Res.	Res.	Res.	Res.	Res.	Res.	Res.	Res.	Res.	SRAM2BS	SRAM2ER
	Reset value																															0	0
0x1C	SYSCFG_CFGR2	Res.	Res.	Res.	Res.	Res.	Res.	Res.	Res.	Res.	Res.	Res.	Res.	Res.	Res.	Res.	Res.	Res.	Res.	Res.	Res.	Res.	Res.	Res.	SPF	Res.	Res.	Res.	Res.	ECCL	PVDL	SPL	CLL
	Reset value																								0					0	0	0	0
0x20	SYSCFG_SWPR	P31WP	P30WP	P29WP	P28WP	P27WP	P26WP	P25WP	P24WP	P23WP	P22WP	P21WP	P20WP	P19WP	P18WP	P17WP	P16WP	P15WP	P14WP	P13WP	P12WP	P11WP	P10WP	P9WP	P8WP	P7WP	P6WP	P5WP	P4WP	P3WP	P2WP	P1WP	P0WP
	Reset value	0	0	0	0	0	0	0	0	0	0	0	0	0	0	0	0	0	0	0	0	0	0	0	0	0	0	0	0	0	0	0	0
0x24	SYSCFG_SKR	Res.	Res.	Res.	Res.	Res.	Res.	Res.	Res.	Res.	Res.	Res.	Res.	Res.	Res.	Res.	Res.	Res.	Res.	Res.	Res.	Res.	Res.	Res.	Res.	KEY							
	Reset value																									0	0	0	0	0	0	0	0
0x29	SYSCFG_SWPR2 (1)	P63WP	P62WP	P61WP	P60WP	P59WP	P58WP	P57WP	P56WP	P55WP	P54WP	P53WP	P52WP	P51WP	P50WP	P49WP	P48WP	P47WP	P46WP	P45WP	P44WP	P43WP	P42WP	P41WP	P40WP	P39WP	P38WP	P37WP	P36WP	P35WP	P34WP	P33WP	P32WP
	Reset value	0	0	0	0	0	0	0	0	0	0	0	0	0	0	0	0	0	0	0	0	0	0	0	0	0	0	0	0	0	0	0	0

1. This register applies only to STM32L49x/L4Ax devices.

Refer to *Section 2.2 on page 75* for the register boundary addresses.

10 Peripherals interconnect matrix

10.1 Introduction

Several peripherals have direct connections between them.

This allows autonomous communication and or synchronization between peripherals, saving CPU resources thus power supply consumption.

In addition, these hardware connections remove software latency and allow design of predictable system.

Depending on peripherals, these interconnections can operate in Run, Sleep, Low-power run and sleep, Stop 0, Stop 1 and Stop 2 modes.

10.2 Connection summary

Table 42. STM32L47x/L48x/L49x/L4Ax peripherals interconnect matrix(1) (2)

Source	Destination																							
	TIM1	TIM8	TIM2	TIM3	TIM4	TIM5	TIM6	TIM7	TIM15	TIM16	TIM17	LPTIM1	LPTIM2	ADC1	ADC2	ADC3	DFSDM1	OPAMP1	OPAMP2	DAC_CH1	DAC_CH2	COMP1	COMP2	IRTIM
TIM1	-	1	1	1	1	-	-	-	1	-	-	-	-	2	2	2	5	-	-	-	-	9	-	-
TIM8	-	-	1	-	1	1	-	-	-	-	-	-	-	2	2	2	5	-	-	4	4	-	9	-
TIM2	1	1	-	1	1	1	-	-	-	-	-	-	-	2	2	2	-	-	-	4	4	9	-	-
TIM3	1	-	1	-	1	1	-	-	1	-	-	-	-	2	2	2	5	-	-	-	-	9	9	-
TIM4	1	1	1	1	-	1	-	-	-	-	-	-	-	2	2	2	5	-	-	4	4	-	-	-
TIM5	-	1	-	-	-	-	-	-	-	-	-	-	-	-	-	-	-	-	-	4	4	-	-	-
TIM6	-	-	-	-	-	-	-	-	-	-	-	-	-	2	2	2	5	-	-	4	4	-	-	-
TIM7	-	-	-	-	-	-	-	-	-	-	-	-	-	-	-	-	5	-	-	4	4	-	-	-
TIM15	1	-	-	1	-	-	-	-	-	-	-	-	-	2	2	2	-	-	-	-	-	-	9	-
TIM16	-	-	-	-	-	-	-	-	1	-	-	-	-	-	-	-	5	-	-	-	-	-	-	15
TIM17	-	-	-	-	-	-	-	-	1	-	-	-	-	-	-	-	-	-	-	-	-	-	-	15
LPTIM1	-	-	-	-	-	-	-	-	-	-	-	-	-	-	-	-	-	-	-	-	-	-	-	-
LPTIM2	-	-	-	-	-	-	-	-	-	-	-	-	-	-	-	-	-	-	-	-	-	-	-	-
ADC1	3	-	-	-	-	-	-	-	-	-	-	-	-	-	10	-	16	-	-	-	-	-	-	-
ADC2	-	3	-	-	-	-	-	-	-	-	-	-	-	-	-	-	16	-	-	-	-	-	-	-
ADC3	3	3	-	-	-	-	-	-	-	-	-	-	-	-	-	-	16	-	-	-	-	-	-	-
DFSDM1	6	6	-	-	-	-	-	-	6	6	6	-	-	-	-	-	-	-	-	-	-	-	-	-
T. Sensor	-	-	-	-	-	-	-	-	-	-	-	-	-	12	-	12	-	-	-	-	-	-	-	-
VBAT	-	-	-	-	-	-	-	-	-	-	-	-	-	12	-	12	-	-	-	-	-	-	-	-

Table 42. STM32L47x/L48x/L49x/L4Ax peripherals interconnect matrix(1) (2) (continued)

Source	Destination																							
	TIM1	TIM8	TIM2	TIM3	TIM4	TIM5	TIM6	TIM7	TIM15	TIM16	TIM17	LPTIM1	LPTIM2	ADC1	ADC2	ADC3	DFSDM1	OPAMP1	OPAMP2	DAC_CH1	DAC_CH2	COMP1	COMP2	IRTIM
VREFINT	-	-	-	-	-	-	-	-	-	-	-	-	-	12	-	-	-	-	-	-	-	-	-	-
OPAMP1	-	-	-	-	-	-	-	-	-	-	-	-	-	12	12	-	-	-	-	-	-	-	-	-
OPAMP2	-	-	-	-	-	-	-	-	-	-	-	-	-	12	12	-	-	-	-	-	-	-	-	-
DAC_CH1	-	-	-	-	-	-	-	-	-	-	-	-	-	-	12	12	-	12	12	-	-	-	-	-
DAC_CH2	-	-	-	-	-	-	-	-	-	-	-	-	-	-	12	12	-	-	-	-	-	-	-	-
HSE	-	-	-	-	-	-	-	-	-	-	7	-	-	-	-	-	-	-	-	-	-	-	-	-
LSE	-	-	7	-	-	-	-	-	7	7	-	-	-	-	-	-	-	-	-	-	-	-	-	-
MSI	-	-	-	-	-	-	-	-	-	-	7	-	-	-	-	-	-	-	-	-	-	-	-	-
LSI	-	-	-	-	-	-	-	-	-	7	-	-	-	-	-	-	-	-	-	-	-	-	-	-
MCO	-	-	-	-	-	-	-	-	-	-	7	-	-	-	-	-	-	-	-	-	-	-	-	-
EXTI	-	-	-	-	-	-	-	-	-	-	-	-	-	2	2	2	5	-	-	4	4	-	-	-
RTC	-	-	-	-	-	-	-	-	-	7	-	8	8	-	-	-	-	-	-	-	-	-	-	-
COMP1	13	13	13	13	-	-	-	-	13	13	13	8	8	-	-	-	-	-	-	-	-	-	-	-
COMP2	13	13	13	13	-	-	-	-	13	13	13	8	8	-	-	-	-	-	-	-	-	-	-	-
SYST ERR	14	14	-	-	-	-	-	-	14	14	14	-	-	-	-	-	-	-	-	-	-	-	-	-
USB(3)	-	-	11	-	-	-	-	-	-	-	-	-	-	-	-	-	-	-	-	-	-	-	-	-

1. Numbers in table are links to corresponding detailed sub-section in *Section 10.3: Interconnection details*.
2. The "-" symbol in grayed cells means no interconnect.
3. Not available on STM32L471 devices.

10.3 Interconnection details

10.3.1 From timer (TIM1/TIM2/TIM3/TIM4/TIM5/TIM8/TIM15/TIM16/TIM17) to timer (TIM1/TIM2/TIM3/TIM4/TIM5/TIM8/TIM15)

Purpose

Some of the TIMx timers are linked together internally for timer synchronization or chaining.

When one timer is configured in Master Mode, it can reset, start, stop or clock the counter of another timer configured in Slave Mode.

A description of the feature is provided in: *Section 31.3.19: Timer synchronization*.

The modes of synchronization are detailed in:

- *Section 31.3.19: Timer synchronization* for advanced-control timers (TIM1/TIM8)
- *Section 31.3.18: Timers and external trigger synchronization* for general-purpose timers (TIM2/TIM3/TIM4/TIM5)
- *Section 32.5.18: External trigger synchronization (TIM15 only)* for general-purpose timer (TIM15)

Triggering signals

The output (from Master) is on signal TIMx_TRGO (and TIMx_TRGO2 for TIM1/TIM8) following a configurable timer event.

The input (to slave) is on signals TIMx_ITR0/ITR1/ITR2/ITR3

The input and output signals for TIM1/TIM8 are shown in *Figure 223: Advanced-control timer block diagram*.

The possible master/slave connections are given in:

- *Table 197: TIMx internal trigger connection*
- *Table 202: TIMx internal trigger connection*
- *Table 205: TIMx Internal trigger connection*

Active power mode

Run, Sleep, Low-power run, Low-power sleep.

10.3.2 From timer (TIM1/TIM2/TIM3/TIM4/TIM6/TIM8/TIM15) and EXTI to ADC (ADC1/ADC2/ADC3)

Purpose

General-purpose timers (TIM2/TIM3/TIM4), basic timer (TIM6), advanced-control timers (TIM1/TIM8), general-purpose timer (TIM15) and EXTI can be used to generate an ADC triggering event.

TIMx synchronization is described in: *Section 30.3.5: Clock selection* (TIM1/TIM8).

ADC synchronization is described in: *Section 18.4.18: Conversion on external trigger and trigger polarity (EXTSEL, EXTEN,JEXTSEL, JEXTEN)*.

Triggering signals

The output (from timer) is on signal TIMx_TRGO, TIMx_TRGO2 or TIMx_CCx event.

The input (to ADC) is on signal EXT[15:0], JEXT[15:0].

The connection between timers and ADCs is provided in:

- *Table 108: ADC1, ADC2 and ADC3 - External triggers for regular channels*
- *Table 109: ADC1, ADC2 and ADC3 - External trigger for injected channels*

Active power mode

Run, Sleep, Low-power run, Low-power sleep.

10.3.3 From ADC (ADC1/ADC2/ADC3) to timer (TIM1/TIM8)

Purpose

ADC1/ADC2/ADC3 can provide trigger event through watchdog signals to advanced-control timers (TIM1/TIM8).

A description of the ADC analog watchdog setting is provided in: *Section 18.4.29: Analog window watchdog (AWD1EN, JAWD1EN, AWD1SGL, AWD1CH, AWD2CH, AWD3CH, AWD_HTx, AWD_LTx, AWDx)*.

Trigger settings on the timer are provided in: *Section 30.3.4: External trigger input*.

Triggering signals

The output (from ADC) is on signals ADCn_AWDx_OUT n = 1, 2, 3 (for ADC1, 2, 3) x = 1, 2, 3 (3 watchdog per ADC) and the input (to timer) on signal TIMx_ETR (external trigger).

Active power mode

Run, Sleep, Low-power run, Low-power sleep.

10.3.4 From timer (TIM2/TIM4/TIM5/TIM6/TIM7/TIM8) and EXTI to DAC (DAC_CH1/DAC_CH2)

Purpose

General-purpose timers (TIM2/TIM4/TIM5), basic timers (TIM6, TIM7), advanced-control timers (TIM8) and EXTI can be used as triggering event to start a DAC conversion.

Triggering signals

The output (from timer) is on signal TIMx_TRGO directly connected to corresponding DAC inputs.

Selection of input triggers on DAC is provided in *Section 19.4.6: DAC trigger selection* (single and dual mode).

Active power mode

Run, Sleep, Low-power run, Low-power sleep.

10.3.5 From timer (TIM1/TIM3/TIM4/TIM6/TIM7/TIM8/TIM16) and EXTI to DFSDM1

Purpose

General-purpose timers (TIM3/TIM4), basic timers (TIM6/TIM7), advanced-control timers (TIM1/TIM8), general-purpose timer (TIM16) and EXTI can be used to generate a triggering event on DFSDM1 module (on each possible data block DFSDM1_FLT0/DFSDM1_FLT1/DFSDM1_FLT2/DFSDM1_FLT3) and start an ADC conversion.

DFSDM triggered conversion feature is described in: *Section 24.4.15: Launching conversions*.

Triggering signals

The output (from timer) is on signal TIMx_TRGO/TIMx_TRGO2 or TIM16_OC1.

The input (on DFSDM1) is on signal DFSDM1_INTRG[0:8].

The connection between timers, EXTI and DFSDM1 is provided in *Table 157: DFSDM triggers connection*.

Active power mode

Run, Sleep, Low-power run, Low-power sleep.

10.3.6 From DFSDM1 to timer (TIM1/TIM8/TIM15/TIM16/TIM17)

Purpose

DFSDM1 can generate a timer break on advanced-control timers (TIM1/TIM8) and general-purpose timers (TIM15/TIM16/TIM17) when a watchdog is activated (minimum or maximum threshold value crossed by analog signal) or when a short-circuit detection is made.

DFSDM1 watchdog is described in *Section 24.4.10: Analog watchdog*.

DFSDM1 short-circuit detection is described in *Section 24.4.11: Short-circuit detector*.

Timer break is described in:

- *Section 30.3.16: Using the break function* (TIM1/TIM8)
- *Section 32.5.13: Using the break function* (TIM15/TIM16/TIM17)

Triggering signals

The output (from DFSDM1) is on signals dfsdm1_break[0:3] directly connected to timer and 'Ored' with other break input signals of the timer.

Active power mode

Run, Sleep, Low-power run, Low-power sleep.

10.3.7 From HSE, LSE, LSI, MSI, MCO, RTC to timer (TIM2/TIM15/TIM16/TIM17)

Purpose

External clocks (HSE, LSE), internal clocks (LSI, MSI), microcontroller output clock (MCO), GPIO and RTC wakeup interrupt can be used as input to general-purpose timer (TIM15/16/17) channel 1.

This allows to calibrate the HSI16/MSI system clocks (with TIM15/TIM16 and LSE) or LSI (with TIM16 and HSE). This is also used to precisely measure LSI (with TIM16 and HSI16) or MSI (with TIM17 and HSI16) oscillator frequency.

When Low Speed External (LSE) oscillator is used, no additional hardware connections are required.

This feature is described in *Section 6.2.18: Internal/external clock measurement with TIM15/TIM16/TIM17*.

External clock LSE can be used as input to general-purpose timers (TIM2) on TIM2_ETR pin, see *Section 31.4.22: TIM2 option register 1 (TIM2_OR1)*.

Active power mode

Run, Sleep, Low-power run, Low-power sleep.

10.3.8 From RTC, COMP1, COMP2 to low-power timer (LPTIM1/LPTIM2)

Purpose

RTC alarm A/B, RTC_TAMP1/2/3 input detection, COMP1/2_OUT can be used as trigger to start LPTIM counters (LPTIM1/2).

Triggering signals

This trigger feature is described in *Section 34.4.6: Trigger multiplexer* (and following sections).

The input selection is described in *Table 212: LPTIM1 external trigger connection*.

Active power mode

Run, Sleep, Low-power run, Low-power sleep, Stop 0, Stop 1, Stop 2 (LPTIM1 only).

10.3.9 From timer (TIM1/TIM2/TIM3/TIM8/TIM15) to comparators (COMP1/COMP2)

Purpose

Advanced-control timers (TIM1/TIM8), general-purpose timers (TIM2/TIM3) and general-purpose timer (TIM15) can be used as blanking window input to COMP1/COMP2

The blanking function is described in *Section 22.3.7: Comparator output blanking function*.

The blanking sources are given in:

- *Section 22.6.1: Comparator 1 control and status register (COMP1_CSR)* bits 20:18 BLANKING[2:0]
- *Section 22.6.2: Comparator 2 control and status register (COMP2_CSR)* bits 20:18 BLANKING[2:0]

Triggering signals

Timer output signal TIMx_Ocx are the inputs to blanking source of COMP1/COMP2.

Active power mode

Run, Sleep, Low-power run, Low-power sleep.

10.3.10 From ADC (ADC1) to ADC (ADC2)

Purpose

ADC1 can be used as a “master” to trigger ADC2 “slave” start of conversion.

In dual ADC mode, the converted data of the master and slave ADCs can be read in parallel.

A description of dual ADC mode is provided in: *Section 18.4.31: Dual ADC modes*.

Triggering signals

Internal to the ADCs.

Active power mode

Run, Sleep, Low-power run, Low-power sleep.

10.3.11 From USB to timer (TIM2)

Purpose

USB (OTG_FS SOF) can generate a trigger to general-purpose timer (TIM2).

Connection of USB to TIM2 is described in *Table 202: TIMx internal trigger connection*.

Triggering signals

Internal signal generated by USB FS Start Of Frame.

Active power mode

Run, Sleep.

10.3.12 From internal analog source to ADC (ADC1/ADC2/ADC3) and OPAMP (OPAMP1/OPAMP2)

Purpose

Internal temperature sensor (V_{TS}) and V_{BAT} monitoring channel are connected to ADC1/ADC3 input channels.

Internal reference voltage (V_{REFINT}) is connected to ADC1 input channels.

OPAMP1 and OPAMP2 outputs can be connected to ADC1 or ADC2 input channels through the GPIO.

DAC1_OUT1 and DAC1_OUT2 outputs can be connected to ADC2 or ADC3 input channel.

DAC1_OUT1 can be connected to OPAMP1_VINP.

DAC1_OUT2 can be connected to OPAMP2_VINP.

This is according:

- *Section 18.2: ADC main features*
- *Section 18.4.11: Channel selection (SQRx, JSQRx)*
- *Figure 68: ADC1 connectivity*
- *Figure 70: ADC3 connectivity*
- *Table 150: Operational amplifier possible connections*

Active power mode

Run, Sleep, Low-power run, Low-power sleep.

10.3.13 From comparators (COMP1/COMP2) to timers (TIM1/TIM2/TIM3/TIM8/TIM15/TIM16/TIM17)

Purpose

Comparators (COMP1/COMP2) output values can be connected to timers (TIM1/TIM2/TIM3/TIM8/TIM15/TIM16/TIM17) input captures or TIMx_ETR signals.

The connection to ETR is described in *Section 30.3.4: External trigger input*.

Comparators (COMP1/COMP2) output values can also generate break input signals for timers (TIM1/TIM8) on input pins TIMx_BKIN or TIMx_BKIN2 through GPIO alternate function selection using open drain connection of IO, see *Section 30.3.17: Bidirectional break inputs*.

The possible connections are given in:

- *Section 30.4.23: TIM1 option register 1 (TIM1_OR1)*
- *Section 30.4.24: TIM8 option register 1 (TIM8_OR1)*
- *Section 30.4.28: TIM1 option register 2 (TIM1_OR2)*
- *Section 30.4.30: TIM8 option register 2 (TIM8_OR2)*
- *Section 31.4.22: TIM2 option register 1 (TIM2_OR1)*
- *Section 31.4.23: TIM3 option register 1 (TIM3_OR1)*
- *Section 31.4.24: TIM2 option register 2 (TIM2_OR2)*
- *Section 31.4.25: TIM3 option register 2 (TIM3_OR2)*
- *Section 32.3: TIM16/TIM17 main features*

Active power mode

Run, Sleep, Low-power run, Low-power sleep.

10.3.14 From system errors to timers (TIM1/TIM8/TIM15/TIM16/TIM17)

Purpose

CSS, CPU hardfault, RAM parity error, FLASH ECC double error detection, PVD can generate system errors in the form of timer break toward timers (TIM1/TIM8/TIM15/TIM16/TIM17).

The purpose of the break function is to protect power switches driven by PWM signals generated by the timers.

List of possible source of break are described in:

- *Section 30.3.16: Using the break function* (TIM1/TIM8)
- *Section 32.5.13: Using the break function* (TIM15/TIM16/TIM17)
- *Figure 333: TIM15 block diagram*
- *Figure 334: TIM16/TIM17 block diagram*

Active power mode

Run, Sleep, Low-power run, Low-power sleep.

10.3.15 From timers (TIM16/TIM17) to IRTIM

Purpose

General-purpose timer (TIM16/TIM17) output channel TIMx_OC1 are used to generate the waveform of infrared signal output.

The functionality is described in *Section 35: Infrared interface (IRTIM)*.

Active power mode

Run, Sleep, Low-power run, Low-power sleep.

10.3.16 From ADC (ADC1/ADC2/ADC3) to DFSDM (only for STM32L49x/L4Ax devices)

Purpose

Up to 3 internal ADC results can be directly connected through a parallel bus to DFSDM input in order to use DFSDM filtering capabilities.

The feature is described as part of DFSDM peripheral description in *Section 24.4.6: Parallel data inputs - Input from internal ADC*

The possible connections are given in:

- *Section 24.7.1: DFSDM channel y configuration register (DFSDM_CHyCFGR1)*
  - Bits 13:12 DATMPX[1:0]: Input data multiplexer for channel y
- *Section 24.7.5: DFSDM channel y data input register (DFSDM_CHyDATINR)*
  - Bits 31:16 INDAT0[15:0]: Input data for channel y or channel y+1
  - Bits 15:0 INDAT0[15:0]: Input data for channel y

Active power mode

Run, Sleep, Low-power run, Low-power sleep.

11 Direct memory access controller (DMA)

11.1 Introduction

The direct memory access (DMA) controller is a bus master and system peripheral.

The DMA is used to perform programmable data transfers between memory-mapped peripherals and/or memories, upon the control of an off-loaded CPU.

The DMA controller features a single AHB master architecture.

There are two instances of DMA, DMA1 and DMA2.

Each channel is dedicated to managing memory access requests from one or more peripherals. Each DMA includes an arbiter for handling the priority between DMA requests.

11.2 DMA main features

- Single AHB master
- Peripheral-to-memory, memory-to-peripheral, memory-to-memory and peripheral-to-peripheral data transfers
- Access, as source and destination, to on-chip memory-mapped devices such as Flash memory, SRAM, and AHB and APB peripherals
- All DMA channels independently configurable:
  - Each channel is associated either with a DMA request signal coming from a peripheral, or with a software trigger in memory-to-memory transfers. This configuration is done by software.
  - Priority between the requests is programmable by software (4 levels per channel: very high, high, medium, low) and by hardware in case of equality (such as request to channel 1 has priority over request to channel 2).
  - Transfer size of source and destination are independent (byte, half-word, word), emulating packing and unpacking. Source and destination addresses must be aligned on the data size.
  - Support of transfers from/to peripherals to/from memory with circular buffer management
  - Programmable number of data to be transferred: 0 to 2^{16} - 1
- Generation of an interrupt request per channel. Each interrupt request is caused from any of the three DMA events: transfer complete, half transfer, or transfer error.

11.3 DMA implementation

11.3.1 DMA1 and DMA2

DMA1 and DMA2 are implemented with the hardware configuration parameters shown in the table below.

Table 43. DMA1 and DMA2 implementation(1)

Feature	DMA1	DMA2
Number of channels	7	7

1. I2C4 and HASH related DMA channels are only applicable for STM32L49x/L4Ax devices.

11.3.2 DMA request mapping

DMA controller

The hardware requests from the peripherals (TIM1/2/3/4/5/6/7/8/15/16/17, ADC1/2/3, DAC_CH1/2, SPI1/2/3, I2C1/2/3/4, SDMMC1, QUADSPI, SWPMI1, DFSDM1, SAI1/2, AES, HASH, DCMI, USART1/2/3, UART4/5 and LPUART1) are mapped to the DMA channels through the DMA_CSELR channel selection register (see *Figure 29* and *Figure 30*).

The peripheral DMA requests can be independently activated/de-activated by programming the DMA control bit in the registers of the corresponding peripheral.

Table 44 and *Table 45* list the DMA requests for each channel.

Figure 29. DMA1 request mapping

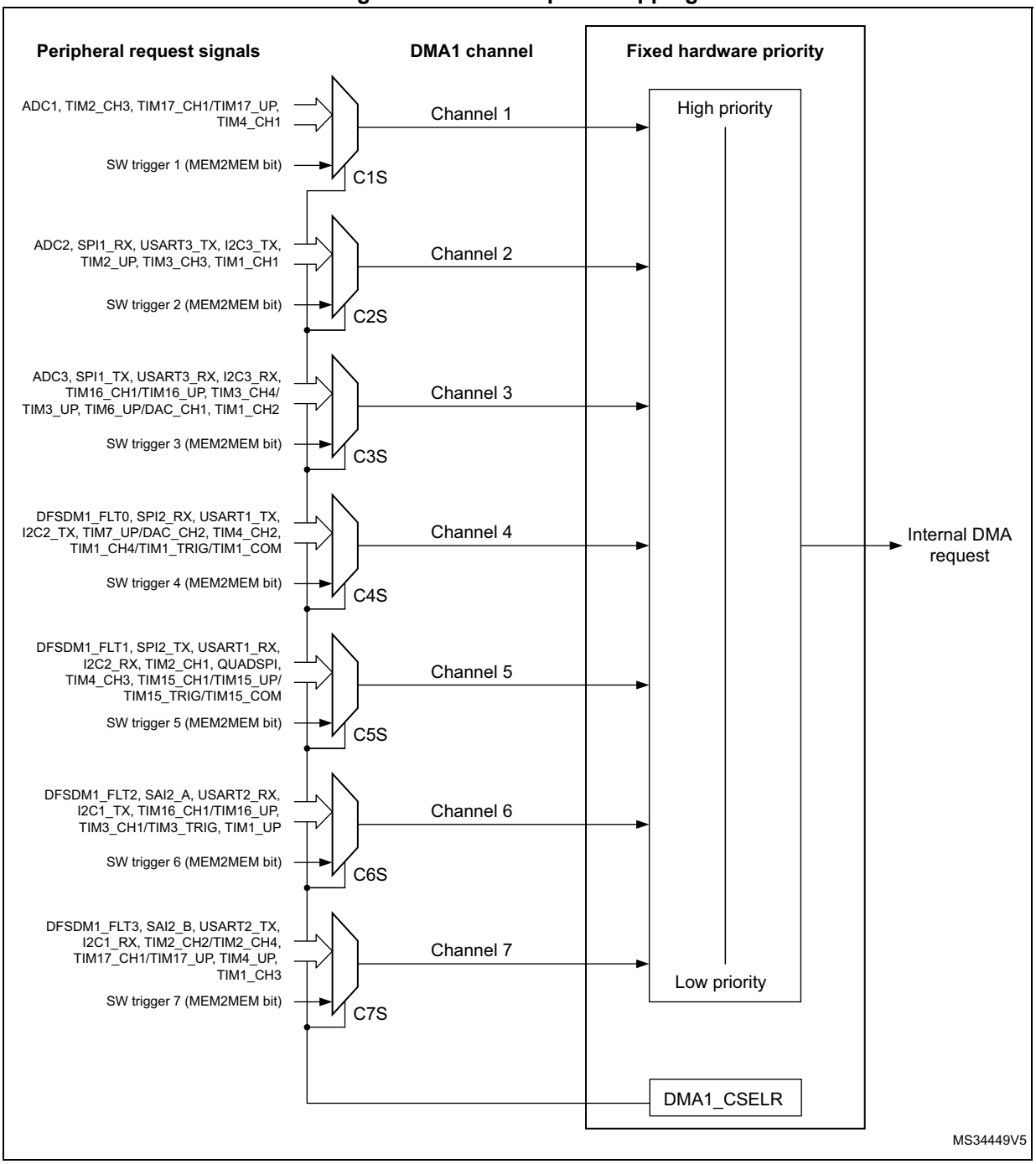

Figure 30. DMA2 request mapping

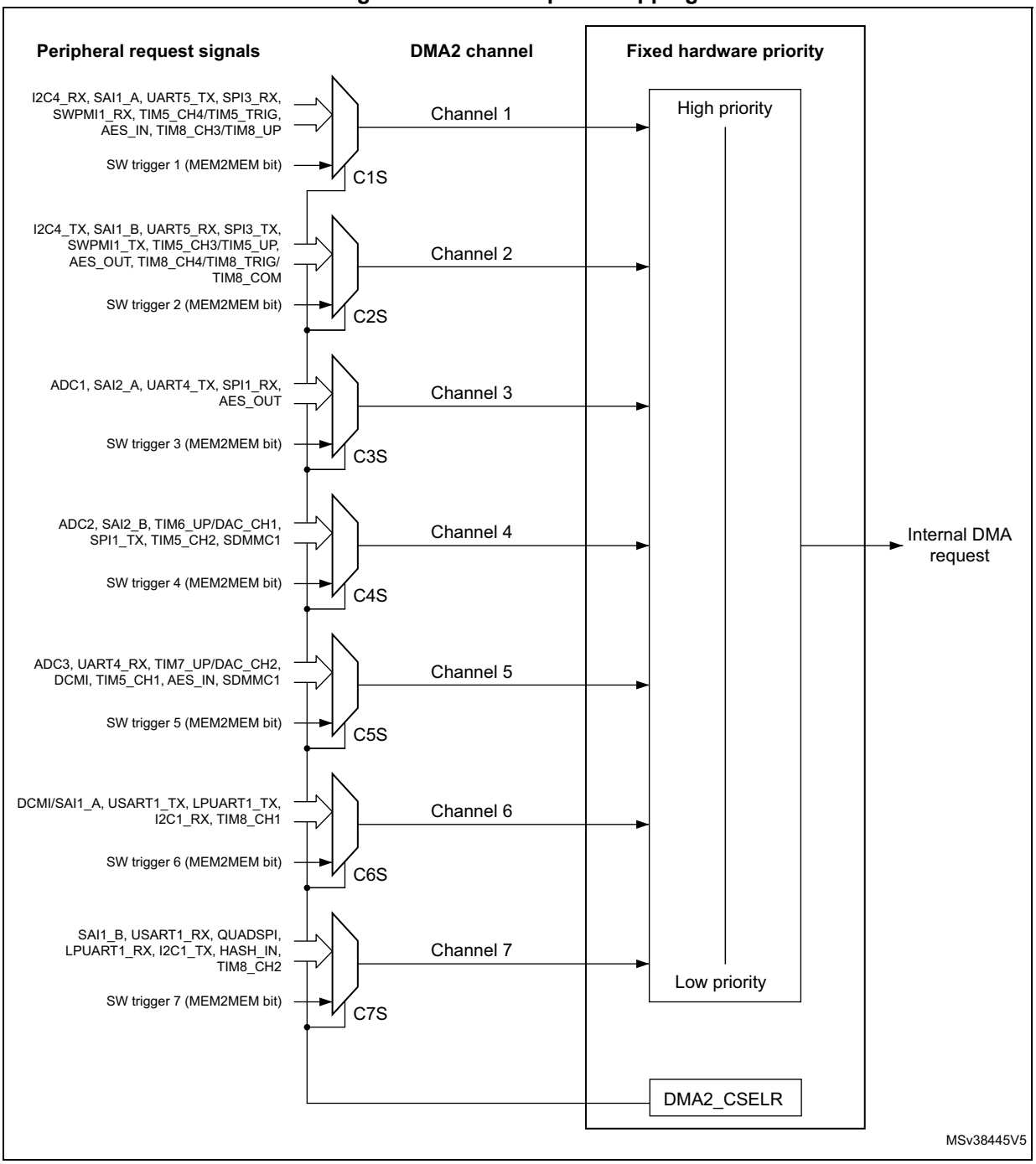

Table 44. DMA1 requests for each channel

CxS[3:0]	Channel 1	Channel 2	Channel 3	Channel 4	Channel 5	Channel 6	Channel 7
0000	ADC1	ADC2	ADC3	DFSDM1_ FLT0	DFSDM1_ FLT1	DFSDM1_ FLT2	DFSDM1_ FLT3
0001	-	SPI1_RX	SPI1_TX	SPI2_RX	SPI2_TX	SAI2_A	SAI2_B
0010	-	USART3_TX	USART3_RX	USART1_TX	USART1_RX	USART2_RX	USART2_TX

Table 44. DMA1 requests for each channel (continued)

CxS[3:0]	Channel 1	Channel 2	Channel 3	Channel 4	Channel 5	Channel 6	Channel 7
0011	-	I2C3_TX	I2C3_RX	I2C2_TX	I2C2_RX	I2C1_TX	I2C1_RX
0100	TIM2_CH3	TIM2_UP	TIM16_CH1 TIM16_UP	-	TIM2_CH1	TIM16_CH1 TIM16_UP	TIM2_CH2 TIM2_CH4
0101	TIM17_CH1 TIM17_UP	TIM3_CH3	TIM3_CH4 TIM3_UP	TIM7_UP DAC_CH2	QUADSPI	TIM3_CH1 TIM3_TRIG	TIM17_CH1 TIM17_UP
0110	TIM4_CH1	-	TIM6_UP DAC_CH1	TIM4_CH2	TIM4_CH3	-	TIM4_UP
0111	-	TIM1_CH1	TIM1_CH2	TIM1_CH4 TIM1_TRIG TIM1_COM	TIM15_CH1 TIM15_UP TIM15_TRIG TIM15_COM	TIM1_UP	TIM1_CH3

Table 45. DMA2 requests for each channel

CxS[3:0]	Channel 1	Channel 2	Channel 3	Channel 4	Channel 5	Channel 6	Channel 7
0000	I2C4_RX(1)	I2C4_TX(1)	ADC1	ADC2	ADC3	DCMI(1)	-
0001	SAI1_A	SAI1_B	SAI2_A	SAI2_B	-	SAI1_A	SAI1_B
0010	UART5_TX	UART5_RX	UART4_TX	-	UART4_RX	USART1_TX	USART1_RX
0011	SPI3_RX	SPI3_TX	-	TIM6_UP DAC_CH1	TIM7_UP DAC_CH2	-	QUADSPI
0100	SWPMI1_RX	SWPMI1_TX	SPI1_RX	SPI1_TX	DCMI(1)	LPUART1_ TX	LPUART1_ RX
0101	TIM5_CH4 TIM5_TRIG	TIM5_CH3 TIM5_UP	-	TIM5_CH2	TIM5_CH1	I2C1_RX	I2C1_TX
0110	AES_IN(2)	AES_OUT(2)	AES_OUT(2)	-	AES_IN(2)	-	HASH_IN(1)
0111	TIM8_CH3 TIM8_UP	TIM8_CH4 TIM8_TRIG TIM8_COM	-	SDMMC1	SDMMC1	TIM8_CH1	TIM8_CH2

1. Only available on STM32L49x/L4Ax devices.
2. Only available on STM32L48x/L4Ax devices.

11.4 DMA functional description

11.4.1 DMA block diagram

The DMA block diagram is shown in the figure below.

Figure 31. DMA block diagram

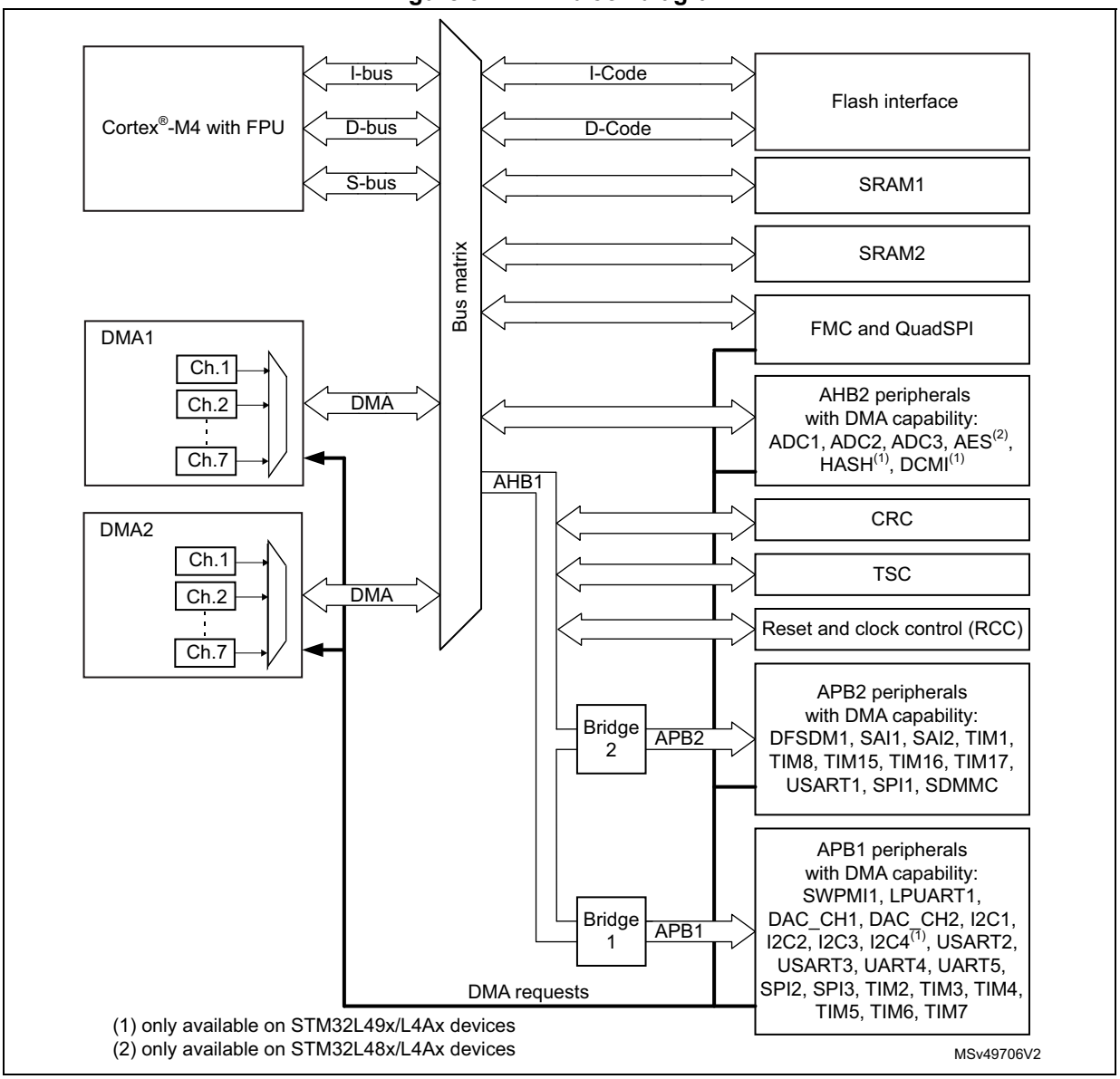

The DMA controller performs direct memory transfer by sharing the AHB system bus with other system masters. The bus matrix implements round-robin scheduling. DMA requests may stop the CPU access to the system bus for a number of bus cycles, when CPU and DMA target the same destination (memory or peripheral).

According to its configuration through the AHB slave interface, the DMA controller arbitrates between the DMA channels and their associated received requests. The DMA controller also schedules the DMA data transfers over the single AHB port master.

The DMA controller generates an interrupt per channel to the interrupt controller.

11.4.2 DMA transfers

The software configures the DMA controller at channel level, in order to perform a block transfer, composed of a sequence of AHB bus transfers.

A DMA block transfer may be requested from a peripheral, or triggered by the software in case of memory-to-memory transfer.

After an event, the following steps of a single DMA transfer occur:

1. The peripheral sends a single DMA request signal to the DMA controller.
2. The DMA controller serves the request, depending on the priority of the channel associated to this peripheral request.
3. As soon as the DMA controller grants the peripheral, an acknowledge is sent to the peripheral by the DMA controller.
4. The peripheral releases its request as soon as it gets the acknowledge from the DMA controller.
5. Once the request is de-asserted by the peripheral, the DMA controller releases the acknowledge.

The peripheral may order a further single request and initiate another single DMA transfer.

The request/acknowledge protocol is used when a peripheral is either the source or the destination of the transfer. For example, in case of memory-to-peripheral transfer, the peripheral initiates the transfer by driving its single request signal to the DMA controller. The DMA controller reads then a single data in the memory and writes this data to the peripheral.

For a given channel x, a DMA block transfer consists of a repeated sequence of:

- a single DMA transfer, encapsulating two AHB transfers of a single data, over the DMA AHB bus master:
  - a single data read (byte, half-word or word) from the peripheral data register or a location in the memory, addressed through an internal current peripheral/memory address register.
    The start address used for the first single transfer is the base address of the peripheral or memory, and is programmed in the DMA_CPARx or DMA_CMARx register.
  - a single data write (byte, half-word or word) to the peripheral data register or a location in the memory, addressed through an internal current peripheral/memory address register.
    The start address used for the first transfer is the base address of the peripheral or memory, and is programmed in the DMA_CPARx or DMA_CMARx register.
- post-decrementing of the programmed DMA_CNDTRx register
  This register contains the remaining number of data items to transfer (number of AHB ‘read followed by write’ transfers).

This sequence is repeated until DMA_CNDTRx is null.

Note: The AHB master bus source/destination address must be aligned with the programmed size of the transferred single data to the source/destination.

11.4.3 DMA arbitration

The DMA arbiter manages the priority between the different channels.

When an active channel x is granted by the arbiter (hardware requested or software triggered), a single DMA transfer is issued (such as a AHB 'read followed by write' transfer of a single data). Then, the arbiter considers again the set of active channels and selects the one with the highest priority.

The priorities are managed in two stages:

- software: priority of each channel is configured in the DMA_CCRx register, to one of the four different levels:
  - very high
  - high
  - medium
  - low
- hardware: if two requests have the same software priority level, the channel with the lowest index gets priority. For example, channel 2 gets priority over channel 4.

When a channel x is programmed for a block transfer in memory-to-memory mode, re arbitration is considered between each single DMA transfer of this channel x. Whenever there is another concurrent active requested channel, the DMA arbiter automatically alternates and grants the other highest-priority requested channel, which may be of lower priority than the memory-to-memory channel.

11.4.4 DMA channels

Each channel may handle a DMA transfer between a peripheral register located at a fixed address, and a memory address. The amount of data items to transfer is programmable. The register that contains the amount of data items to transfer is decremented after each transfer.

A DMA channel is programmed at block transfer level.

Programmable data sizes

The transfer sizes of a single data (byte, half-word, or word) to the peripheral and memory are programmable through, respectively, the PSIZE[1:0] and MSIZE[1:0] fields of the DMA_CCRx register.

Pointer incrementation

The peripheral and memory pointers may be automatically incremented after each transfer, depending on the PINC and MINC bits of the DMA_CCRx register.

If the **incremented mode** is enabled (PINC or MINC set to 1), the address of the next transfer is the address of the previous one incremented by 1, 2 or 4, depending on the data size defined in PSIZE[1:0] or MSIZE[1:0]. The first transfer address is the one programmed in the DMA_CPARx or DMA_CMARx register. During transfers, these registers keep the initially programmed value. The current transfer addresses (in the current internal peripheral/memory address register) are not accessible by software.

If the channel x is configured in **non-circular mode**, no DMA request is served after the last data transfer (once the number of single data to transfer reaches zero). The DMA channel must be disabled in order to reload a new number of data items into the DMA_CNDTRx register.

Note: If the channel x is disabled, the DMA registers are not reset. The DMA channel registers (DMA_CCRx, DMA_CPARx and DMA_CMARx) retain the initial values programmed during the channel configuration phase.

In **circular mode**, after the last data transfer, the DMA_CNDTRx register is automatically reloaded with the initially programmed value. The current internal address registers are reloaded with the base address values from the DMA_CPARx and DMA_CMARx registers.

Channel configuration procedure

The following sequence is needed to configure a DMA channel x:

1. Set the peripheral register address in the DMA_CPARx register.
   The data is moved from/to this address to/from the memory after the peripheral event, or after the channel is enabled in memory-to-memory mode.
2. Set the memory address in the DMA_CMARx register.
   The data is written to/read from the memory after the peripheral event or after the channel is enabled in memory-to-memory mode.
3. Configure the total number of data to transfer in the DMA_CNDTRx register.
   After each data transfer, this value is decremented.
4. Configure the parameters listed below in the DMA_CCRx register:
   - the channel priority
   - the data transfer direction
   - the circular mode
   - the peripheral and memory incremented mode
   - the peripheral and memory data size
   - the interrupt enable at half and/or full transfer and/or transfer error
5. Activate the channel by setting the EN bit in the DMA_CCRx register.

A channel, as soon as enabled, may serve any DMA request from the peripheral connected to this channel, or may start a memory-to-memory block transfer.

Note: The two last steps of the channel configuration procedure may be merged into a single access to the DMA_CCRx register, to configure and enable the channel.

Channel state and disabling a channel

A channel x in active state is an enabled channel (read DMA_CCRx.EN = 1). An active channel x is a channel that must have been enabled by the software (DMA_CCRx.EN set to 1) and afterwards with no occurred transfer error (DMA_ISR.TEIFx = 0). In case there is a transfer error, the channel is automatically disabled by hardware (DMA_CCRx.EN = 0).

The three following use cases may happen:

- Suspend and resume a channel

  This corresponds to the two following actions:

  – An active channel is disabled by software (writing DMA_CCRx.EN = 0 whereas DMA_CCRx.EN = 1).

  – The software enables the channel again (DMA_CCRx.EN set to 1) without reconfiguring the other channel registers (such as DMA_CNDTRx, DMA_CPARx and DMA_CMARx).

  This case is not supported by the DMA hardware, that does not guarantee that the remaining data transfers are performed correctly.

- Stop and abort a channel

  If the application does not need any more the channel, this active channel can be disabled by software. The channel is stopped and aborted but the DMA_CNDTRx register content may not correctly reflect the remaining data transfers versus the aborted source and destination buffer/register.

- Abort and restart a channel

  This corresponds to the software sequence: disable an active channel, then reconfigure the channel and enable it again.

  This is supported by the hardware if the following conditions are met:

  – The application guarantees that, when the software is disabling the channel, a DMA data transfer is not occurring at the same time over its master port. For example, the application can first disable the peripheral in DMA mode, in order to ensure that there is no pending hardware DMA request from this peripheral.

  – The software must operate separated write accesses to the same DMA_CCRx register: First disable the channel. Second reconfigure the channel for a next block transfer including the DMA_CCRx if a configuration change is needed. There are read-only DMA_CCRx register fields when DMA_CCRx.EN=1. Finally enable again the channel.

When a channel transfer error occurs, the EN bit of the DMA_CCRx register is cleared by hardware. This EN bit can not be set again by software to re-activate the channel x, until the TEIFx bit of the DMA_ISR register is set.

Circular mode (in memory-to-peripheral/peripheral-to-memory transfers)

The circular mode is available to handle circular buffers and continuous data flows (such as ADC scan mode). This feature is enabled using the CIRC bit in the DMA_CCRx register.

Note: The circular mode must not be used in memory-to-memory mode. Before enabling a channel in circular mode (CIRC = 1), the software must clear the MEM2MEM bit of the DMA_CCRx register. When the circular mode is activated, the amount of data to transfer is automatically reloaded with the initial value programmed during the channel configuration phase, and the DMA requests continue to be served.

In order to stop a circular transfer, the software needs to stop the peripheral from generating DMA requests (such as quit the ADC scan mode), before disabling the DMA channel. The software must explicitly program the DMA_CNDTRx value before starting/enabling a transfer, and after having stopped a circular transfer.

Memory-to-memory mode

The DMA channels may operate without being triggered by a request from a peripheral. This mode is called memory-to-memory mode, and is initiated by software.

If the MEM2MEM bit in the DMA_CCRx register is set, the channel, if enabled, initiates transfers. The transfer stops once the DMA_CNDTRx register reaches zero.

Note: The memory-to-memory mode must not be used in circular mode. Before enabling a channel in memory-to-memory mode (MEM2MEM = 1), the software must clear the CIRC bit of the DMA_CCRx register.

Peripheral-to-peripheral mode

Any DMA channel can operate in peripheral-to-peripheral mode:

- when the hardware request from a peripheral is selected to trigger the DMA channel

  This peripheral is the DMA initiator and paces the data transfer from/to this peripheral to/from a register belonging to another memory-mapped peripheral (this one being not configured in DMA mode).
- when no peripheral request is selected and connected to the DMA channel

  The software configures a register-to-register transfer by setting the MEM2MEM bit of the DMA_CCRx register.

Programming transfer direction, assigning source/destination

The value of the DIR bit of the DMA_CCRx register sets the direction of the transfer, and consequently, it identifies the source and the destination, regardless the source/destination type (peripheral or memory):

- **DIR = 1** defines typically a memory-to-peripheral transfer. More generally, if DIR = 1:
  - The **source** attributes are defined by the DMA_MARx register, the MSIZE[1:0] field and MINC bit of the DMA_CCRx register.
    Regardless of their usual naming, these ‘memory’ register, field and bit are used to define the source peripheral in peripheral-to-peripheral mode.
  - The **destination** attributes are defined by the DMA_PARx register, the PSIZE[1:0] field and PINC bit of the DMA_CCRx register.
    Regardless of their usual naming, these ‘peripheral’ register, field and bit are used to define the destination memory in memory-to-memory mode.
- **DIR = 0** defines typically a peripheral-to-memory transfer. More generally, if DIR = 0:
  - The **source** attributes are defined by the DMA_PARx register, the PSIZE[1:0] field and PINC bit of the DMA_CCRx register.
    Regardless of their usual naming, these ‘peripheral’ register, field and bit are used to define the source memory in memory-to-memory mode
  - The **destination** attributes are defined by the DMA_MARx register, the MSIZE[1:0] field and MINC bit of the DMA_CCRx register.
    Regardless of their usual naming, these ‘memory’ register, field and bit are used to define the destination peripheral in peripheral-to-peripheral mode.

11.4.5 DMA data width, alignment and endianness

When PSIZE[1:0] and MSIZE[1:0] are not equal, the DMA controller performs some data alignments as described in the table below.

Table 46. Programmable data width and endian behavior (when PINC = MINC = 1)

Source port width (MSIZE if DIR = 1, else PSIZE)	Destination port width (PSIZE if DIR = 1, else MSIZE)	Number of data items to transfer (NDT)	Source content: address / data (DMA_CMARx if DIR = 1, else DMA_CPARx)	DMA transfers	Destination content: address / data (DMA_CPARx if DIR = 1, else DMA_CMARx)
8	8	4	@0x0 / B0 @0x1 / B1 @0x2 / B2 @0x3 / B3	1: read B0[7:0] @0x0 then write B0[7:0] @0x0 2: read B1[7:0] @0x1 then write B1[7:0] @0x1 3: read B2[7:0] @0x2 then write B2[7:0] @0x2 4: read B3[7:0] @0x3 then write B3[7:0] @0x3	@0x0 / B0 @0x1 / B1 @0x2 / B2 @0x3 / B3
8	16	4	@0x0 / B0 @0x1 / B1 @0x2 / B2 @0x3 / B3	1: read B0[7:0] @0x0 then write 00B0[15:0] @0x0 2: read B1[7:0] @0x1 then write 00B1[15:0] @0x2 3: read B2[7:0] @0x2 then write 00B2[15:0] @0x4 4: read B3[7:0] @0x3 then write 00B3[15:0] @0x6	@0x0 / 00B0 @0x2 / 00B1 @0x4 / 00B2 @0x6 / 00B3
8	32	4	@0x0 / B0 @0x1 / B1 @0x2 / B2 @0x3 / B3	1: read B0[7:0] @0x0 then write 000000B0[31:0] @0x0 2: read B1[7:0] @0x1 then write 000000B1[31:0] @0x4 3: read B2[7:0] @0x2 then write 000000B2[31:0] @0x8 4: read B3[7:0] @0x3 then write 000000B3[31:0] @0xC	@0x0 / 000000B0 @0x4 / 000000B1 @0x8 / 000000B2 @0xC / 000000B3
16	8	4	@0x0 / B1B0 @0x2 / B3B2 @0x4 / B5B4 @0x6 / B7B6	1: read B1B0[15:0] @0x0 then write B0[7:0] @0x0 2: read B3B2[15:0] @0x2 then write B2[7:0] @0x1 3: read B5B4[15:0] @0x4 then write B4[7:0] @0x2 4: read B7B6[15:0] @0x6 then write B6[7:0] @0x3	@0x0 / B0 @0x1 / B2 @0x2 / B4 @0x3 / B6
16	16	4	@0x0 / B1B0 @0x2 / B3B2 @0x4 / B5B4 @0x6 / B7B6	1: read B1B0[15:0] @0x0 then write B1B0[15:0] @0x0 2: read B3B2[15:0] @0x2 then write B3B2[15:0] @0x2 3: read B5B4[15:0] @0x4 then write B5B4[15:0] @0x4 4: read B7B6[15:0] @0x6 then write B7B6[15:0] @0x6	@0x0 / B1B0 @0x2 / B3B2 @0x4 / B5B4 @0x6 / B7B6
16	32	4	@0x0 / B1B0 @0x2 / B3B2 @0x4 / B5B4 @0x6 / B7B6	1: read B1B0[15:0] @0x0 then write 0000B1B0[31:0] @0x0 2: read B3B2[15:0] @0x2 then write 0000B3B2[31:0] @0x4 3: read B5B4[15:0] @0x4 then write 0000B5B4[31:0] @0x8 4: read B7B6[15:0] @0x6 then write 0000B7B6[31:0] @0xC	@0x0 / 0000B1B0 @0x4 / 0000B3B2 @0x8 / 0000B5B4 @0xC / 0000B7B6
32	8	4	@0x0 / B3B2B1B0 @0x4 / B7B6B5B4 @0x8 / BBBAB9B8 @0xC / BFBEBDBC	1: read B3B2B1B0[31:0] @0x0 then write B0[7:0] @0x0 2: read B7B6B5B4[31:0] @0x4 then write B4[7:0] @0x1 3: read BBBAB9B8[31:0] @0x8 then write B8[7:0] @0x2 4: read BFBEBDBC[31:0] @0xC then write BC[7:0] @0x3	@0x0 / B0 @0x1 / B4 @0x2 / B8 @0x3 / BC
32	16	4	@0x0 / B3B2B1B0 @0x4 / B7B6B5B4 @0x8 / BBBAB9B8 @0xC / BFBEBDBC	1: read B3B2B1B0[31:0] @0x0 then write B1B0[15:0] @0x0 2: read B7B6B5B4[31:0] @0x4 then write B5B4[15:0] @0x2 3: read BBBAB9B8[31:0] @0x8 then write B9B8[15:0] @0x4 4: read BFBEBDBC[31:0] @0xC then write BDBC[15:0] @0x6	@0x0 / B1B0 @0x2 / B5B4 @0x4 / B9B8 @0x6 / BDBC
32	32	4	@0x0 / B3B2B1B0 @0x4 / B7B6B5B4 @0x8 / BBBAB9B8 @0xC / BFBEBDBC	1: read B3B2B1B0[31:0] @0x0 then write B3B2B1B0[31:0] @0x0 2: read B7B6B5B4[31:0] @0x4 then write B7B6B5B4[31:0] @0x4 3: read BBBAB9B8[31:0] @0x8 then write BBBAB9B8[31:0] @0x8 4: read BFBEBDBC[31:0] @0xC then write BFBEBDBC[31:0] @0xC	@0x0 / B3B2B1B0 @0x4 / B7B6B5B4 @0x8 / BBBAB9B8 @0xC / BFBEBDBC

Addressing AHB peripherals not supporting byte/half-word write transfers

When the DMA controller initiates an AHB byte or half-word write transfer, the data are duplicated on the unused lanes of the AHB master 32-bit data bus (HWDATA[31:0]).

When the AHB slave peripheral does not support byte or half-word write transfers and does not generate any error, the DMA controller writes the 32 HWDATA bits as shown in the two examples below:

- To write the half-word 0xABCD, the DMA controller sets the HWDATA bus to 0xABCDABCD with a half-word data size (HSIZE = HalfWord in AHB master bus).
- To write the byte 0xAB, the DMA controller sets the HWDATA bus to 0xABABABAB with a byte data size (HSIZE = Byte in the AHB master bus).

Assuming the AHB/APB bridge is an AHB 32-bit slave peripheral that does not take into account the HSIZE data, any AHB byte or half-word transfer is changed into a 32-bit APB transfer as described below:

- An AHB byte write transfer of 0xB0 to one of the 0x0, 0x1, 0x2 or 0x3 addresses, is converted to an APB word write transfer of 0xB0B0B0B0 to the 0x0 address.
- An AHB half-word write transfer of 0xB1B0 to the 0x0 or 0x2 addresses, is converted to an APB word write transfer of 0xB1B0B1B0 to the 0x0 address.

11.4.6 DMA error management

A DMA transfer error is generated when reading from or writing to a reserved address space. When a DMA transfer error occurs during a DMA read or write access, the faulty channel x is automatically disabled through a hardware clear of its EN bit in the corresponding DMA_CCRx register.

The TEIFx bit of the DMA_ISR register is set. An interrupt is then generated if the TEIE bit of the DMA_CCRx register is set.

The EN bit of the DMA_CCRx register can not be set again by software (channel x re-activated) until the TEIFx bit of the DMA_ISR register is cleared (by setting the CTEIFx bit of the DMA_IFCR register).

When the software is notified with a transfer error over a channel which involves a peripheral, the software has first to stop this peripheral in DMA mode, in order to disable any pending or future DMA request. Then software may normally reconfigure both DMA and the peripheral in DMA mode for a new transfer.

11.5 DMA interrupts

An interrupt can be generated on a half transfer, transfer complete or transfer error for each DMA channel x. Separate interrupt enable bits are available for flexibility.

Table 47. DMA interrupt requests

Interrupt request	Interrupt event	Event flag	Interrupt enable bit
Channel x interrupt	Half transfer on channel x	HTIFx	HTIEx
	Transfer complete on channel x	TCIFx	TCIEx
	Transfer error on channel x	TEIFx	TEIEx
	Half transfer or transfer complete or transfer error on channel x	GIFx	-

11.6 DMA registers

Refer to *Section 1.2* for a list of abbreviations used in register descriptions.

The DMA registers have to be accessed by words (32-bit).

11.6.1 DMA interrupt status register (DMA_ISR)

Address offset: 0x00

Reset value: 0x0000 0000

Every status bit is cleared by hardware when the software sets the corresponding clear bit or the corresponding global clear bit CGIFx, in the DMA_IFCR register.

31	30	29	28	27	26	25	24	23	22	21	20	19	18	17	16
Res.	Res.	Res.	Res.	TEIF7	HTIF7	TCIF7	GIF7	TEIF6	HTIF6	TCIF6	GIF6	TEIF5	HTIF5	TCIF5	GIF5
				r	r	r	r	r	r	r	r	r	r	r	r

15	14	13	12	11	10	9	8	7	6	5	4	3	2	1	0
TEIF4	HTIF4	TCIF4	GIF4	TEIF3	HTIF3	TCIF3	GIF3	TEIF2	HTIF2	TCIF2	GIF2	TEIF1	HTIF1	TCIF1	GIF1
r	r	r	r	r	r	r	r	r	r	r	r	r	r	r	r

Bits 31:28 Reserved, must be kept at reset value.

Bit 27 **TEIF7**: transfer error (TE) flag for channel 7
0: no TE event
1: a TE event occurred

Bit 26 **HTIF7**: half transfer (HT) flag for channel 7
0: no HT event
1: a HT event occurred

Bit 25 **TCIF7**: transfer complete (TC) flag for channel 7
0: no TC event
1: a TC event occurred

Bit 24 **GIF7**: global interrupt flag for channel 7
0: no TE, HT or TC event
1: a TE, HT or TC event occurred

Bit 23 **TEIF6**: transfer error (TE) flag for channel 6
0: no TE event
1: a TE event occurred

Bit 22 **HTIF6**: half transfer (HT) flag for channel 6
0: no HT event
1: a HT event occurred

Bit 21 **TCIF6**: transfer complete (TC) flag for channel 6
0: no TC event
1: a TC event occurred

Bit 20 **GIF6**: global interrupt flag for channel 6
0: no TE, HT or TC event
1: a TE, HT or TC event occurred

Bit 19 **TEIF5**: transfer error (TE) flag for channel 5
0: no TE event
1: a TE event occurred

Bit 18 **HTIF5**: half transfer (HT) flag for channel 5
0: no HT event
1: a HT event occurred

Bit 17 **TCIF5**: transfer complete (TC) flag for channel 5
0: no TC event
1: a TC event occurred

Bit 16 **GIF5**: global interrupt flag for channel 5
0: no TE, HT or TC event
1: a TE, HT or TC event occurred

Bit 15 **TEIF4**: transfer error (TE) flag for channel 4
0: no TE event
1: a TE event occurred

Bit 14 **HTIF4**: half transfer (HT) flag for channel 4
0: no HT event
1: a HT event occurred

Bit 13 **TCIF4**: transfer complete (TC) flag for channel 4
0: no TC event
1: a TC event occurred

Bit 12 **GIF4**: global interrupt flag for channel 4
0: no TE, HT or TC event
1: a TE, HT or TC event occurred

Bit 11 **TEIF3**: transfer error (TE) flag for channel 3
0: no TE event
1: a TE event occurred

Bit 10 **HTIF3**: half transfer (HT) flag for channel 3
0: no HT event
1: a HT event occurred

Bit 9 **TCIF3**: transfer complete (TC) flag for channel 3
0: no TC event
1: a TC event occurred

Bit 8 **GIF3**: global interrupt flag for channel 3
0: no TE, HT or TC event
1: a TE, HT or TC event occurred

Bit 7 **TEIF2**: transfer error (TE) flag for channel 2
0: no TE event
1: a TE event occurred

Bit 6 **HTIF2**: half transfer (HT) flag for channel 2
0: no HT event
1: a HT event occurred

Bit 5 **TCIF2**: transfer complete (TC) flag for channel 2
0: no TC event
1: a TC event occurred

Bit 4 **GIF2**: global interrupt flag for channel 2
0: no TE, HT or TC event
1: a TE, HT or TC event occurred

Bit 3 **TEIF1**: transfer error (TE) flag for channel 1
0: no TE event
1: a TE event occurred

Bit 2 **HTIF1**: half transfer (HT) flag for channel 1
0: no HT event
1: a HT event occurred

Bit 1 **TCIF1**: transfer complete (TC) flag for channel 1
0: no TC event
1: a TC event occurred

Bit 0 **GIF1**: global interrupt flag for channel 1
0: no TE, HT or TC event
1: a TE, HT or TC event occurred

11.6.2 DMA interrupt flag clear register (DMA_IFCR)

Address offset: 0x04

Reset value: 0x0000 0000

Setting the global clear bit CGIFx of the channel x in this DMA_IFCR register, causes the DMA hardware to clear the corresponding GIFx bit and any individual flag among TEIFx, HTIFx, TCIFx, in the DMA_ISR register.

Setting any individual clear bit among CTEIFx, CHTIFx, CTCIFx in this DMA_IFCR register, causes the DMA hardware to clear the corresponding individual flag and the global flag GIFx in the DMA_ISR register, provided that none of the two other individual flags is set.

Writing 0 into any flag clear bit has no effect.

31	30	29	28	27	26	25	24	23	22	21	20	19	18	17	16
Res.	Res.	Res.	Res.	CTEIF7	CHTIF7	CTCIF7	CGIF7	CTEIF6	CHTIF6	CTCIF6	CGIF6	CTEIF5	CHTIF5	CTCIF5	CGIF5
				w	w	w	w	w	w	w	w	w	w	w	w

15	14	13	12	11	10	9	8	7	6	5	4	3	2	1	0
CTEIF4	CHTIF4	CTCIF4	CGIF4	CTEIF3	CHTIF3	CTCIF3	CGIF3	CTEIF2	CHTIF2	CTCIF2	CGIF2	CTEIF1	CHTIF1	CTCIF1	CGIF1
w	w	w	w	w	w	w	w	w	w	w	w	w	w	w	w

Bits 31:28 Reserved, must be kept at reset value.

Bit 27 **CTEIF7**: transfer error flag clear for channel 7

Bit 26 **CHTIF7**: half transfer flag clear for channel 7

Bit 25 **CTCIF7**: transfer complete flag clear for channel 7

Bit 24 **CGIF7**: global interrupt flag clear for channel 7

Bit 23 **CTEIF6**: transfer error flag clear for channel 6

Bit 22 **CHTIF6**: half transfer flag clear for channel 6

Bit 21 **CTCIF6**: transfer complete flag clear for channel 6

Bit 20 **CGIF6**: global interrupt flag clear for channel 6

Bit 19 **CTEIF5**: transfer error flag clear for channel 5

Bit 18 **CHTIF5**: half transfer flag clear for channel 5

Bit 17 **CTCIF5**: transfer complete flag clear for channel 5

Bit 16 **CGIF5**: global interrupt flag clear for channel 5

Bit 15 **CTEIF4**: transfer error flag clear for channel 4

Bit 14 **CHTIF4**: half transfer flag clear for channel 4

Bit 13 **CTCIF4**: transfer complete flag clear for channel 4

Bit 12 **CGIF4**: global interrupt flag clear for channel 4

Bit 11 **CTEIF3**: transfer error flag clear for channel 3

Bit 10 **CHTIF3**: half transfer flag clear for channel 3

Bit 9 **CTCIF3**: transfer complete flag clear for channel 3

Bit 8 **CGIF3**: global interrupt flag clear for channel 3

Bit 7 **CTEIF2**: transfer error flag clear for channel 2

Bit 6 **CHTIF2**: half transfer flag clear for channel 2

Bit 5 **CTCIF2**: transfer complete flag clear for channel 2

Bit 4 **CGIF2**: global interrupt flag clear for channel 2

Bit 3 **CTEIF1**: transfer error flag clear for channel 1

Bit 2 **CHTIF1**: half transfer flag clear for channel 1

Bit 1 **CTCIF1**: transfer complete flag clear for channel 1

Bit 0 **CGIF1**: global interrupt flag clear for channel 1

11.6.3 DMA channel x configuration register (DMA_CCRx)

Address offset: 0x08 + 0x14 * (x - 1), (x = 1 to 7)

Reset value: 0x0000 0000

The register fields/bits MEM2MEM, PL[1:0], MSIZE[1:0], PSIZE[1:0], MINC, PINC, and DIR are read-only when EN = 1.

The states of MEM2MEM and CIRC bits must not be both high at the same time.

31	30	29	28	27	26	25	24	23	22	21	20	19	18	17	16
Res.	Res.	Res.	Res.	Res.	Res.	Res.	Res.	Res.	Res.	Res.	Res.	Res.	Res.	Res.	Res.

15	14	13	12	11	10	9	8	7	6	5	4	3	2	1	0
Res.	MEM2 MEM	PL[1:0]		MSIZE[1:0]		PSIZE[1:0]		MINC	PINC	CIRC	DIR	TEIE	HTIE	TCIE	EN
	rw	rw	rw	rw	rw	rw	rw	rw	rw	rw	rw	rw	rw	rw	rw

Bits 31:15 Reserved, must be kept at reset value.

Bit 14 **MEM2MEM**: memory-to-memory mode

0: disabled

1: enabled

Note: this bit is set and cleared by software.
It must not be written when the channel is enabled (EN = 1).
It is read-only when the channel is enabled (EN = 1).

Bits 13:12 **PL[1:0]**: priority level

00: low

01: medium

10: high

11: very high

Note: this field is set and cleared by software.
It must not be written when the channel is enabled (EN = 1).
It is read-only when the channel is enabled (EN = 1).

Bits 11:10 **MSIZE[1:0]**: memory size

Defines the data size of each DMA transfer to the identified memory.

In memory-to-memory mode, this field identifies the memory source if DIR = 1 and the memory destination if DIR = 0.

In peripheral-to-peripheral mode, this field identifies the peripheral source if DIR = 1 and the peripheral destination if DIR = 0.

00: 8 bits

01: 16 bits

10: 32 bits

11: reserved

Note: this field is set and cleared by software.
It must not be written when the channel is enabled (EN = 1).
It is read-only when the channel is enabled (EN = 1).

Bits 9:8 **PSIZE[1:0]**: peripheral size

Defines the data size of each DMA transfer to the identified peripheral.

In memory-to-memory mode, this field identifies the memory destination if DIR = 1 and the memory source if DIR = 0.

In peripheral-to-peripheral mode, this field identifies the peripheral destination if DIR = 1 and the peripheral source if DIR = 0.

00: 8 bits

01: 16 bits

10: 32 bits

11: reserved

Note: this field is set and cleared by software.
It must not be written when the channel is enabled (EN = 1).
It is read-only when the channel is enabled (EN = 1).

Bit 7 **MINC**: memory increment mode

Defines the increment mode for each DMA transfer to the identified memory.

In memory-to-memory mode, this field identifies the memory source if DIR = 1 and the memory destination if DIR = 0.

In peripheral-to-peripheral mode, this field identifies the peripheral source if DIR = 1 and the peripheral destination if DIR = 0.

0: disabled

1: enabled

Note: this bit is set and cleared by software.
It must not be written when the channel is enabled (EN = 1).
It is read-only when the channel is enabled (EN = 1).

Bit 6 **PINC**: peripheral increment mode

Defines the increment mode for each DMA transfer to the identified peripheral.

n memory-to-memory mode, this field identifies the memory destination if DIR = 1 and the memory source if DIR = 0.

In peripheral-to-peripheral mode, this field identifies the peripheral destination if DIR = 1 and the peripheral source if DIR = 0.

0: disabled

1: enabled

Note: this bit is set and cleared by software.
It must not be written when the channel is enabled (EN = 1).
It is read-only when the channel is enabled (EN = 1).

Bit 5 **CIRC**: circular mode

0: disabled

1: enabled

Note: this bit is set and cleared by software.
It must not be written when the channel is enabled (EN = 1).
It is not read-only when the channel is enabled (EN = 1).

Bit 4 **DIR**: data transfer direction

This bit must be set only in memory-to-peripheral and peripheral-to-memory modes.

0: read from peripheral

- Source attributes are defined by PSIZE and PINC, plus the DMA_CPARx register. This is still valid in a memory-to-memory mode.
- Destination attributes are defined by MSIZE and MINC, plus the DMA_CMARx register. This is still valid in a peripheral-to-peripheral mode.

1: read from memory

- Destination attributes are defined by PSIZE and PINC, plus the DMA_CPARx register. This is still valid in a memory-to-memory mode.
- Source attributes are defined by MSIZE and MINC, plus the DMA_CMARx register. This is still valid in a peripheral-to-peripheral mode.

Note: this bit is set and cleared by software.
It must not be written when the channel is enabled (EN = 1).
It is read-only when the channel is enabled (EN = 1).

Bit 3 **TEIE**: transfer error interrupt enable

0: disabled

1: enabled

Note: this bit is set and cleared by software.
It must not be written when the channel is enabled (EN = 1).
It is not read-only when the channel is enabled (EN = 1).

Bit 2 **HTIE**: half transfer interrupt enable

0: disabled

1: enabled

Note: this bit is set and cleared by software.
It must not be written when the channel is enabled (EN = 1).
It is not read-only when the channel is enabled (EN = 1).

Bit 1 **TCIE**: transfer complete interrupt enable

0: disabled

1: enabled

Note: this bit is set and cleared by software.
It must not be written when the channel is enabled (EN = 1).
It is not read-only when the channel is enabled (EN = 1).

Bit 0 **EN**: channel enable

When a channel transfer error occurs, this bit is cleared by hardware. It can not be set again by software (channel x re-activated) until the TEIFx bit of the DMA_ISR register is cleared (by setting the CTEIFx bit of the DMA_IFCR register).

0: disabled

1: enabled

Note: this bit is set and cleared by software.

11.6.4 DMA channel x number of data to transfer register (DMA_CNDTRx)

Address offset: 0x0C + 0x14 * (x - 1), (x = 1 to 7)

Reset value: 0x0000 0000

31	30	29	28	27	26	25	24	23	22	21	20	19	18	17	16
Res.	Res.	Res.	Res.	Res.	Res.	Res.	Res.	Res.	Res.	Res.	Res.	Res.	Res.	Res.	Res.

15	14	13	12	11	10	9	8	7	6	5	4	3	2	1	0
NDT[15:0]															
rw	rw	rw	rw	rw	rw	rw	rw	rw	rw	rw	rw	rw	rw	rw	rw

Bits 31:16 Reserved, must be kept at reset value.

Bits 15:0 **NDT[15:0]**: number of data to transfer (0 to 2^{16} - 1)

This field is updated by hardware when the channel is enabled:

- It is decremented after each single DMA 'read followed by write' transfer, indicating the remaining amount of data items to transfer.
- It is kept at zero when the programmed amount of data to transfer is reached, if the channel is not in circular mode (CIRC = 0 in the DMA_CCRx register).
- It is reloaded automatically by the previously programmed value, when the transfer is complete, if the channel is in circular mode (CIRC = 1).

If this field is zero, no transfer can be served whatever the channel status (enabled or not).

Note: this field is set and cleared by software.
It must not be written when the channel is enabled (EN = 1).
It is read-only when the channel is enabled (EN = 1).

11.6.5 DMA channel x peripheral address register (DMA_CPARx)

Address offset: 0x10 + 0x14 * (x - 1), (x = 1 to 7)

Reset value: 0x0000 0000

31	30	29	28	27	26	25	24	23	22	21	20	19	18	17	16
PA[31:16]															
rw	rw	rw	rw	rw	rw	rw	rw	rw	rw	rw	rw	rw	rw	rw	rw

15	14	13	12	11	10	9	8	7	6	5	4	3	2	1	0
PA[15:0]															
rw	rw	rw	rw	rw	rw	rw	rw	rw	rw	rw	rw	rw	rw	rw	rw

Bits 31:0 **PA[31:0]**: peripheral address

It contains the base address of the peripheral data register from/to which the data will be read/written.

When PSIZE[1:0] = 01 (16 bits), bit 0 of PA[31:0] is ignored. Access is automatically aligned to a half-word address.

When PSIZE = 10 (32 bits), bits 1 and 0 of PA[31:0] are ignored. Access is automatically aligned to a word address.

In memory-to-memory mode, this register identifies the memory destination address if DIR = 1 and the memory source address if DIR = 0.

In peripheral-to-peripheral mode, this register identifies the peripheral destination address DIR = 1 and the peripheral source address if DIR = 0.

Note: this register is set and cleared by software.
It must not be written when the channel is enabled (EN = 1).
It is not read-only when the channel is enabled (EN = 1).

11.6.6 DMA channel x memory address register (DMA_CMARx)

Address offset: 0x14 + 0x14 * (x - 1), (x = 1 to 7)

Reset value: 0x0000 0000

31	30	29	28	27	26	25	24	23	22	21	20	19	18	17	16
MA[31:16]															
rw	rw	rw	rw	rw	rw	rw	rw	rw	rw	rw	rw	rw	rw	rw	rw
15	14	13	12	11	10	9	8	7	6	5	4	3	2	1	0
MA[15:0]															
rw	rw	rw	rw	rw	rw	rw	rw	rw	rw	rw	rw	rw	rw	rw	rw

Bits 31:0 **MA[31:0]**: peripheral address

It contains the base address of the memory from/to which the data will be read/written.

When MSIZE[1:0] = 01 (16 bits), bit 0 of MA[31:0] is ignored. Access is automatically aligned to a half-word address.

When MSIZE = 10 (32 bits), bits 1 and 0 of MA[31:0] are ignored. Access is automatically aligned to a word address.

In memory-to-memory mode, this register identifies the memory source address if DIR = 1 and the memory destination address if DIR = 0.

In peripheral-to-peripheral mode, this register identifies the peripheral source address DIR = 1 and the peripheral destination address if DIR = 0.

Note: this register is set and cleared by software.
It must not be written when the channel is enabled (EN = 1).
It is not read-only when the channel is enabled (EN = 1).

11.6.7 DMA channel selection register (DMA_CSELR)

Address offset: 0xA8

Reset value: 0x0000 0000

This register is used to manage the mapping of DMA channels as detailed in *Section 11.3.2: DMA request mapping*.

31	30	29	28	27	26	25	24	23	22	21	20	19	18	17	16
Res.	Res.	Res.	Res.	C7S[3:0]				C6S[3:0]				C5S[3:0]			
				rw	rw	rw	rw	rw	rw	rw	rw	rw	rw	rw	rw

15	14	13	12	11	10	9	8	7	6	5	4	3	2	1	0
C4S[3:0]				C3S[3:0]				C2S[3:0]				C1S[3:0]			
rw	rw	rw	rw	rw	rw	rw	rw	rw	rw	rw	rw	rw	rw	rw	rw

Bits 31:28 Reserved, must be kept at reset value.

Bits 27:24 **C7S[3:0]**: DMA channel 7 selection
Details available in *Section 11.3.2: DMA request mapping*

Bits 23:20 **C6S[3:0]**: DMA channel 6 selection
Details available in *Section 11.3.2: DMA request mapping*

Bits 19:16 **C5S[3:0]**: DMA channel 5 selection
Details available in *Section 11.3.2: DMA request mapping*

Bits 15:12 **C4S[3:0]**: DMA channel 4 selection
Details available in *Section 11.3.2: DMA request mapping*

Bits 11:8 **C3S[3:0]**: DMA channel 3 selection
Details available in *Section 11.3.2: DMA request mapping*

Bits 7:4 **C2S[3:0]**: DMA channel 2 selection
Details available in *Section 11.3.2: DMA request mapping*

Bits 3:0 **C1S[3:0]**: DMA channel 1 selection
Details available in *Section 11.3.2: DMA request mapping*

11.6.8 DMA register map

The table below gives the DMA register map and reset values.

Table 48. DMA register map and reset values

Offset	Register	31	30	29	28	27	26	25	24	23	22	21	20	19	18	17	16	15	14	13	12	11	10	9	8	7	6	5	4	3	2	1	0
0x000	DMA_ISR	Res.	Res.	Res.	Res.	TEIF7	HTIF7	TCIF7	GIF7	TEIF6	HTIF6	TCIF6	GIF6	TEIF5	HTIF5	TCIF5	GIF5	TEIF4	HTIF4	TCIF4	GIF4	TEIF3	HTIF3	TCIF3	GIF3	TEIF2	HTIF2	TCIF2	GIF2	TEIF1	HTIF1	TCIF1	GIF1
	Reset value					0	0	0	0	0	0	0	0	0	0	0	0	0	0	0	0	0	0	0	0	0	0	0	0	0	0	0	0
0x004	DMA_IFCR	Res.	Res.	Res.	Res.	CTEIF7	CHTIF7	CTCIF7	CGIF7	CTEIF6	CHTIF6	CTCIF6	CGIF6	CTEIF5	CHTIF5	CTCIF5	CGIF5	CTEIF4	CHTIF4	CTCIF4	CGIF4	CTEIF3	CHTIF3	CTCIF3	CGIF3	CTEIF2	CHTIF2	CTCIF2	CGIF2	CTEIF1	CHTIF1	CTCIF1	CGIF1
	Reset value					0	0	0	0	0	0	0	0	0	0	0	0	0	0	0	0	0	0	0	0	0	0	0	0	0	0	0	0
0x008	DMA_CCR1	Res.	Res.	Res.	Res.	Res.	Res.	Res.	Res.	Res.	Res.	Res.	Res.	Res.	Res.	Res.	Res.	Res.	MEM2MEM	PL[1:0]		MSIZE[1:0]		PSIZE[1:0]		MINC	PINC	CIRC	DIR	TEIE	HTIE	TCIE	EN
	Reset value																		0	0	0	0	0	0	0	0	0	0	0	0	0	0	0

Table 48. DMA register map and reset values (continued)

Offset	Register	31	30	29	28	27	26	25	24	23	22	21	20	19	18	17	16	15	14	13	12	11	10	9	8	7	6	5	4	3	2	1	0
0x00C	DMA_CNDTR1	Res.	Res.	Res.	Res.	Res.	Res.	Res.	Res.	Res.	Res.	Res.	Res.	Res.	Res.	Res.	Res.	NDTR[15:0]															
	Reset value																	0	0	0	0	0	0	0	0	0	0	0	0	0	0	0	0
0x010	DMA_CPAR1	PA[31:0]																															
	Reset value	0	0	0	0	0	0	0	0	0	0	0	0	0	0	0	0	0	0	0	0	0	0	0	0	0	0	0	0	0	0	0	0
0x014	DMA_CMAR1	MA[31:0]																															
	Reset value	0	0	0	0	0	0	0	0	0	0	0	0	0	0	0	0	0	0	0	0	0	0	0	0	0	0	0	0	0	0	0	0
0x018	Reserved	Reserved.																															
0x01C	DMA_CCR2	Res.	Res.	Res.	Res.	Res.	Res.	Res.	Res.	Res.	Res.	Res.	Res.	Res.	Res.	Res.	Res.	Res.	MEM2MEM	PL[1:0]		MSIZE[1:0]		PSIZE[1:0]		MINC	PINC	CIRC	DIR	TEIE	HTIE	TCIE	EN
	Reset value																		0	0	0	0	0	0	0	0	0	0	0	0	0	0	0
0x020	DMA_CNDTR2	Res.	Res.	Res.	Res.	Res.	Res.	Res.	Res.	Res.	Res.	Res.	Res.	Res.	Res.	Res.	Res.	NDTR[15:0]															
	Reset value																	0	0	0	0	0	0	0	0	0	0	0	0	0	0	0	0
0x024	DMA_CPAR2	PA[31:0]																															
	Reset value	0	0	0	0	0	0	0	0	0	0	0	0	0	0	0	0	0	0	0	0	0	0	0	0	0	0	0	0	0	0	0	0
0x028	DMA_CMAR2	MA[31:0]																															
	Reset value	0	0	0	0	0	0	0	0	0	0	0	0	0	0	0	0	0	0	0	0	0	0	0	0	0	0	0	0	0	0	0	0
0x02C	Reserved	Reserved.																															
0x030	DMA_CCR3	Res.	Res.	Res.	Res.	Res.	Res.	Res.	Res.	Res.	Res.	Res.	Res.	Res.	Res.	Res.	Res.	Res.	MEM2MEM	PL[1:0]		MSIZE[1:0]		PSIZE[1:0]		MINC	PINC	CIRC	DIR	TEIE	HTIE	TCIE	EN
	Reset value																		0	0	0	0	0	0	0	0	0	0	0	0	0	0	0
0x034	DMA_CNDTR3	Res.	Res.	Res.	Res.	Res.	Res.	Res.	Res.	Res.	Res.	Res.	Res.	Res.	Res.	Res.	Res.	NDTR[15:0]															
	Reset value																	0	0	0	0	0	0	0	0	0	0	0	0	0	0	0	0
0x038	DMA_CPAR3	PA[31:0]																															
	Reset value	0	0	0	0	0	0	0	0	0	0	0	0	0	0	0	0	0	0	0	0	0	0	0	0	0	0	0	0	0	0	0	0
0x03C	DMA_CMAR3	MA[31:0]																															
	Reset value	0	0	0	0	0	0	0	0	0	0	0	0	0	0	0	0	0	0	0	0	0	0	0	0	0	0	0	0	0	0	0	0
0x040	Reserved	Reserved.																															
0x044	DMA_CCR4	Res.	Res.	Res.	Res.	Res.	Res.	Res.	Res.	Res.	Res.	Res.	Res.	Res.	Res.	Res.	Res.	Res.	MEM2MEM	PL[1:0]		MSIZE[1:0]		PSIZE[1:0]		MINC	PINC	CIRC	DIR	TEIE	HTIE	TCIE	EN
	Reset value																		0	0	0	0	0	0	0	0	0	0	0	0	0	0	0
0x048	DMA_CNDTR4	Res.	Res.	Res.	Res.	Res.	Res.	Res.	Res.	Res.	Res.	Res.	Res.	Res.	Res.	Res.	Res.	NDTR[15:0]															
	Reset value																	0	0	0	0	0	0	0	0	0	0	0	0	0	0	0	0
0x04C	DMA_CPAR4	PA[31:0]																															
	Reset value	0	0	0	0	0	0	0	0	0	0	0	0	0	0	0	0	0	0	0	0	0	0	0	0	0	0	0	0	0	0	0	0
0x050	DMA_CMAR4	MA[31:0]																															
	Reset value	0	0	0	0	0	0	0	0	0	0	0	0	0	0	0	0	0	0	0	0	0	0	0	0	0	0	0	0	0	0	0	0
0x054	Reserved	Reserved.																															
0x058	DMA_CCR5	Res.	Res.	Res.	Res.	Res.	Res.	Res.	Res.	Res.	Res.	Res.	Res.	Res.	Res.	Res.	Res.	Res.	MEM2MEM	PL[1:0]		MSIZE[1:0]		PSIZE[1:0]		MINC	PINC	CIRC	DIR	TEIE	HTIE	TCIE	EN
	Reset value																		0	0	0	0	0	0	0	0	0	0	0	0	0	0	0
0x05C	DMA_CNDTR5	Res.	Res.	Res.	Res.	Res.	Res.	Res.	Res.	Res.	Res.	Res.	Res.	Res.	Res.	Res.	Res.	NDTR[15:0]															
	Reset value																	0	0	0	0	0	0	0	0	0	0	0	0	0	0	0	0
0x060	DMA_CPAR5	PA[31:0]																															
	Reset value	0	0	0	0	0	0	0	0	0	0	0	0	0	0	0	0	0	0	0	0	0	0	0	0	0	0	0	0	0	0	0	0

Table 48. DMA register map and reset values (continued)

Offset	Register	31	30	29	28	27	26	25	24	23	22	21	20	19	18	17	16	15	14	13	12	11	10	9	8	7	6	5	4	3	2	1	0
0x064	DMA_CMAR5	MA[31:0]																															
	Reset value	0	0	0	0	0	0	0	0	0	0	0	0	0	0	0	0	0	0	0	0	0	0	0	0	0	0	0	0	0	0	0	0
0x068	Reserved	Reserved.																															
0x06C	DMA_CCR6	Res.	Res.	Res.	Res.	Res.	Res.	Res.	Res.	Res.	Res.	Res.	Res.	Res.	Res.	Res.	Res.	Res.	MEM2MEM	PL[1:0]		MSIZE[1:0]		PSIZE[1:0]		MINC	PINC	CIRC	DIR	TEIE	HTIE	TCIE	EN
	Reset value																		0	0	0	0	0	0	0	0	0	0	0	0	0	0	0
0x070	DMA_CNDTR6	Res.	Res.	Res.	Res.	Res.	Res.	Res.	Res.	Res.	Res.	Res.	Res.	Res.	Res.	Res.	Res.	Res.	NDTR[15:0]														
	Reset value																		0	0	0	0	0	0	0	0	0	0	0	0	0	0	0
0x074	DMA_CPAR6	PA[31:0]																															
	Reset value	0	0	0	0	0	0	0	0	0	0	0	0	0	0	0	0	0	0	0	0	0	0	0	0	0	0	0	0	0	0	0	0
0x078	DMA_CMAR6	MA[31:0]																															
	Reset value	0	0	0	0	0	0	0	0	0	0	0	0	0	0	0	0	0	0	0	0	0	0	0	0	0	0	0	0	0	0	0	0
0x07C	Reserved	Reserved.																															
0x080	DMA_CCR7	Res.	Res.	Res.	Res.	Res.	Res.	Res.	Res.	Res.	Res.	Res.	Res.	Res.	Res.	Res.	Res.	Res.	MEM2MEM	PL[1:0]		MSIZE[1:0]		PSIZE[1:0]		MINC	PINC	CIRC	DIR	TEIE	HTIE	TCIE	EN
	Reset value																		0	0	0	0	0	0	0	0	0	0	0	0	0	0	0
0x084	DMA_CNDTR7	Res.	Res.	Res.	Res.	Res.	Res.	Res.	Res.	Res.	Res.	Res.	Res.	Res.	Res.	Res.	Res.	Res.	NDTR[15:0]														
	Reset value																		0	0	0	0	0	0	0	0	0	0	0	0	0	0	0
0x088	DMA_CPAR7	PA[31:0]																															
	Reset value	0	0	0	0	0	0	0	0	0	0	0	0	0	0	0	0	0	0	0	0	0	0	0	0	0	0	0	0	0	0	0	0
0x08C	DMA_CMAR7	MA[31:0]																															
	Reset value	0	0	0	0	0	0	0	0	0	0	0	0	0	0	0	0	0	0	0	0	0	0	0	0	0	0	0	0	0	0	0	0
0x090 to 0x0A4	Reserved	Reserved.																															
0x0A8	DMA_CSELR	Res.	Res.	Res.	Res.	C7S[3:0]				C6S[3:0]				C5S[3:0]				C4S[3:0]				C3S[3:0]				C2S[3:0]				C1S[3:0]			
	Reset value					0	0	0	0	0	0	0	0	0	0	0	0	0	0	0	0	0	0	0	0	0	0	0	0	0	0	0	0

Refer to *Section 2.2* for the register boundary addresses.

12 Chrom-ART Accelerator controller (DMA2D)

This section applies to STM32L49x/L4Ax devices only.

12.1 DMA2D introduction

The Chrom-ART Accelerator (DMA2D) is a specialized DMA dedicated to image manipulation. It can perform the following operations:

- Filling a part or the whole of a destination image with a specific color
- Copying a part or the whole of a source image into a part or the whole of a destination image
- Copying a part or the whole of a source image into a part or the whole of a destination image with a pixel format conversion
- Blending a part and/or two complete source images with different pixel format and copy the result into a part or the whole of a destination image with a different color format.

All the classical color coding schemes are supported from 4-bit up to 32-bit per pixel with indexed or direct color mode. The DMA2D has its own dedicated memories for CLUTs (color look-up tables).

12.2 DMA2D main features

The main DMA2D features are:

- Single AHB master bus architecture.
- AHB slave programming interface supporting 8/16/32-bit accesses (except for CLUT accesses which are 32-bit).
- User programmable working area size
- User programmable offset for sources and destination areas
- User programmable sources and destination addresses on the whole memory space
- Up to 2 sources with blending operation
- Alpha value can be modified (source value, fixed value or modulated value)
- User programmable source and destination color format
- Up to 11 color formats supported from 4-bit up to 32-bit per pixel with indirect or direct color coding
- 2 internal memories for CLUT storage in indirect color mode
- Automatic CLUT loading or CLUT programming via the CPU
- User programmable CLUT size
- Internal timer to control AHB bandwidth
- 4 operating modes: register-to-memory, memory-to-memory, memory-to-memory with pixel format conversion, and memory-to-memory with pixel format conversion and blending

- Area filling with a fixed color
- Copy from an area to another
- Copy with pixel format conversion between source and destination images
- Copy from two sources with independent color format and blending
- Abort and suspend of DMA2D operations
- Watermark interrupt on a user programmable destination line
- Interrupt generation on bus error or access conflict
- Interrupt generation on process completion

12.3 DMA2D functional description

12.3.1 General description

The DMA2D controller performs direct memory transfer. As an AHB master, it can take the control of the AHB bus matrix to initiate AHB transactions.

The DMA2D can operate in the following modes:

- Register-to-memory
- Memory-to-memory
- Memory-to-memory with Pixel Format Conversion
- Memory-to-memory with Pixel Format Conversion and Blending

The AHB slave port is used to program the DMA2D controller.

The block diagram of the DMA2D is shown in *Figure 32: DMA2D block diagram*.

Figure 32. DMA2D block diagram

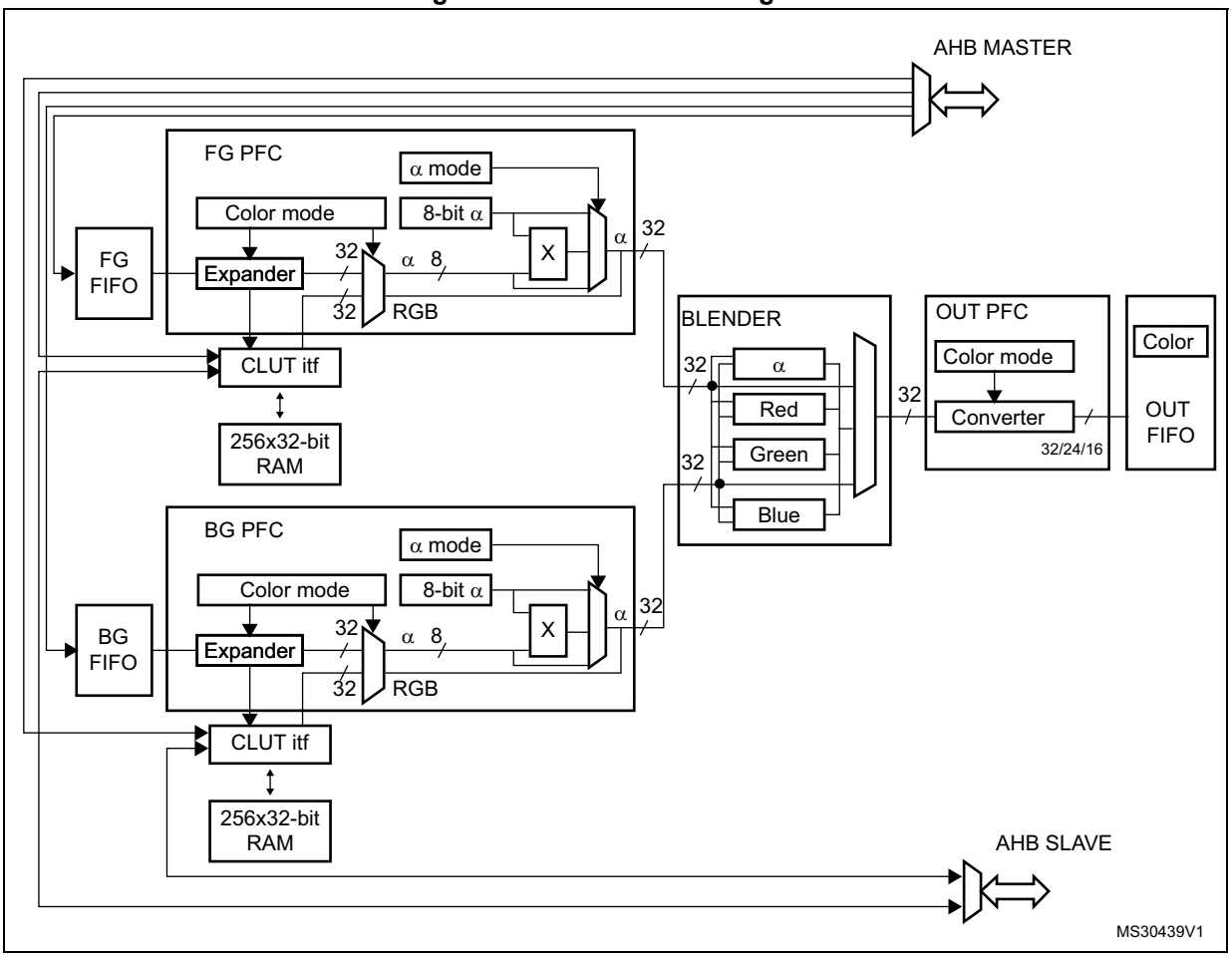

12.3.2 DMA2D control

The DMA2D controller is configured through the DMA2D Control Register (DMA2D_CR) which allows selecting:

The user application can perform the following operations:

- Select the operating mode
- Enable/disable the DMA2D interrupt
- Start/suspend/abort ongoing data transfers

12.3.3 DMA2D foreground and background FIFOs

The DMA2D foreground (FG) FG FIFO and background (BG) FIFO fetch the input data to be copied and/or processed.

The FIFOs fetch the pixels according to the color format defined in their respective pixel format converter (PFC).

They are programmed through a set of control registers:

- DMA2D foreground memory address register (DMA2D_FGMAR)
- DMA2D foreground offset register (DMA2D_FGOR)
- DMA2D background memory address register (DMA2D_BGMAR)
- DMA2D background offset register (DMA2D_BGBOR)
- DMA2D number of lines register (number of lines and pixel per lines) (DMA2D_NLR)

When the DMA2D operates in register-to-memory mode, none of the FIFOs is activated.

When the DMA2D operates in memory-to-memory mode (no pixel format conversion nor blending operation), only the FG FIFO is activated and acts as a buffer.

When the DMA2D operates in memory-to-memory operation with pixel format conversion (no blending operation), the BG FIFO is not activated.

12.3.4 DMA2D foreground and background pixel format converter (PFC)

DMA2D foreground pixel format converter (PFC) and background pixel format converter perform the pixel format conversion to generate a 32-bit per pixel value. The PFC can also modify the alpha channel.

The first stage of the converter converts the color format. The original color format of the foreground pixel and background pixels are configured through the CM[3:0] bits of the DMA2D_FGPFCCR and DMA2D_BGPFCCR, respectively.

The supported input formats are given in *Table 49: Supported color mode in input*.

Table 49. Supported color mode in input

CM[3:0]	Color mode
0000	ARGB8888
0001	RGB888
0010	RGB565
0011	ARGB1555
0100	ARGB4444
0101	L8
0110	AL44
0111	AL88
1000	L4
1001	A8
1010	A4

The color format are coded as follows:

- Alpha value field: transparency
  0xFF value corresponds to an opaque pixel and 0x00 to a transparent one.
- R field for Red
- G field for Green
- B field for Blue
- L field: luminance
  This field is the index to a CLUT to retrieve the three/four RGB/ARGB components.

If the original format was direct color mode (ARGB/RGB), then the extension to 8-bit per channel is performed by copying the MSBs into the LSBs. This ensures a perfect linearity of the conversion.

If the original format is indirect color mode (L/AL), a CLUT is required and each pixel format converter is associated with a 256 entry 32-bit CLUT.

If the original format does not include an alpha channel, the alpha value is automatically set to 0xFF (opaque).

For the specific alpha mode A4 and A8, no color information is stored nor indexed. The color to be used for the image generation is fixed and is defined in the DMA2D_FGCOLR for foreground pixels and in the DMA2D_BGCOLR register for background pixels.

The order of the fields in the system memory is defined in *Table 50: Data order in memory*.

Table 50. Data order in memory

Color Mode	@ + 3	@ + 2	@ + 1	@ + 0
ARGB8888	A_0[7:0]	R_0[7:0]	G_0[7:0]	B_0[7:0]
RGB888	B_1[7:0]	R_0[7:0]	G_0[7:0]	B_0[7:0]
	G_2[7:0]	B_2[7:0]	R_1[7:0]	G_1[7:0]
	R_3[7:0]	G_3[7:0]	B_3[7:0]	R_2[7:0]
RGB565	R_1[4:0]G_1[5:3]	G_1[2:0]B_1[4:0]	R_0[4:0]G_0[5:3]	G_0[2:0]B_0[4:0]
ARGB1555	A_1[0]R_1[4:0]G_1[4:3]	G_1[2:0]B_1[4:0]	A_0[0]R_0[4:0]G_0[4:3]	G_0[2:0]B_0[4:0]
ARGB4444	A_1[3:0]R_1[3:0]	G_1[3:0]B_1[3:0]	A_0[3:0]R_0[3:0]	G_0[3:0]B_0[3:0]
L8	L_3[7:0]	L_2[7:0]	L_1[7:0]	L_0[7:0]
AL44	A_3[3:0]L_3[3:0]	A_2[3:0]L_2[3:0]	A_1[3:0]L_1[3:0]	A_0[3:0]L_0[3:0]
AL88	A_1[7:0]	L_1[7:0]	A_0[7:0]	L_0[7:0]
L4	L_7[3:0]L_6[3:0]	L_5[3:0]L_4[3:0]	L_3[3:0]L_2[3:0]	L_1[3:0]L_0[3:0]
A8	A_3[7:0]	A_2[7:0]	A_1[7:0]	A_0[7:0]
A4	A_7[3:0]A_6[3:0]	A_5[3:0]A_4[3:0]	A_3[3:0]A_2[3:0]	A_1[3:0]A_0[3:0]

The 24-bit RGB888 aligned on 32-bit is supported through the ARGB8888 mode.

Once the 32-bit value is generated, the alpha channel can be modified according to the AM[1:0] field of the DMA2D_FGPFCCR/DMA2D_BGPFCCR registers as shown in *Table 51: Alpha mode configuration*.

The alpha channel can be:

- kept as it is (no modification),
- replaced by the ALPHA[7:0] value of DMA2D_FGPFCCR/DMA2D_BGPFCCR,
- or replaced by the original alpha value multiplied by the ALPHA[7:0] value of DMA2D_FGPFCCR/DMA2D_BGPFCCR divided by 255.

Table 51. Alpha mode configuration

AM[1:0]	Alpha mode
00	No modification
01	Replaced by value in DMA2D_xxPFCCR
10	Replaced by original value multiplied by the value in DMA2D_xxPFCCR / 255
11	Reserved

Note: To support the alternate format, the incoming alpha value can be inverted setting the AI bit of the DMA2D_FGPFCCR/DMA2D_BGPFCCR registers. This applies also to the Alpha value stored in the DMA2D_FGPFCCR/DMA2D_BGPFCCR and in the CLUT.

The R and B fields can also be swapped setting the RBS bit of the DMA2D_FGPFCCR/DMA2D_BGPFCCR registers. This applies also to the RGB order used in the CLUT and in the DMA2D_FGCOLR/DMA2D_BGCOLR registers.

12.3.5 DMA2D foreground and background CLUT interface

The CLUT interface manages the CLUT memory access and the automatic loading of the CLUT.

Three kinds of accesses are possible:

- CLUT read by the PFC during pixel format conversion operation
- CLUT accessed through the AHB slave port when the CPU is reading or writing data into the CLUT
- CLUT written through the AHB master port when an automatic loading of the CLUT is performed

The CLUT memory loading can be done in two different ways:

- Automatic loading

  The following sequence must be followed to load the CLUT:

  a) Program the CLUT address into the DMA2D_FGCMAR register (foreground CLUT) or DMA2D_BGCMAR register (background CLUT)

  b) Program the CLUT size in the CS[7:0] field of the DMA2D_FGPFCCR register (foreground CLUT) or DMA2D_BGPFCCR register (background CLUT).

  c) Set the START bit of the DMA2D_FGPFCCR register (foreground CLUT) or DMA2D_BGPFCCR register (background CLUT) to start the transfer. During this automatic loading process, the CLUT is not accessible by the CPU. If a conflict occurs, a CLUT access error interrupt is raised assuming CAEIE is set to ‘1’ in DMA2D_CR.

- Manual loading

  The application has to program the CLUT manually through the DMA2D AHB slave port to which the local CLUT memory is mapped.The foreground CLUT (FGCLUT) is

located at address offset 0x0400 and the background CLUT (BGCLUT) at address offset 0x0800.

The CLUT format is 24 or 32 bits. It is configured through the CCM bit of the DMA2D_FGPFCCR register (foreground CLUT) or DMA2D_BGPFCCR register (background CLUT) as shown in *Table 52: Supported CLUT color mode*.

Table 52. Supported CLUT color mode

CCM	CLUT color mode
0	32-bit ARGB8888
1	24-bit RGB888

The way the CLUT data are organized in the system memory is specified in *Table 53: CLUT data order in system memory*.

Table 53. CLUT data order in system memory

CLUT Color Mode	@ + 3	@ + 2	@ + 1	@ + 0
ARGB8888	A_0[7:0]	R_0[7:0]	G_0[7:0]	B_0[7:0]
RGB888	B_1[7:0]	R_0[7:0]	G_0[7:0]	B_0[7:0]
	G_2[7:0]	B_2[7:0]	R_1[7:0]	G_1[7:0]
	R_3[7:0]	G_3[7:0]	B_3[7:0]	R_2[7:0]

12.3.6 DMA2D blender

The DMA2D blender blends the source pixels by pair to compute the resulting pixel.

The blending is performed according to the following equation:

$$\text{with } \alpha_{Mult} = \frac{\alpha_{FG} \cdot \alpha_{BG}}{255}$$

$$\alpha_{OUT} = \alpha_{FG} + \alpha_{BG} - \alpha_{Mult}$$

$$C_{OUT} = \frac{C_{FG}.\alpha_{FG} + C_{BG}.\alpha_{BG} - C_{BG}.\alpha_{Mult}}{\alpha_{OUT}} \quad \text{with C = R or G or B}$$

Division is rounded to the nearest lower integer

No configuration register is required by the blender. The blender usage depends on the DMA2D operating mode defined in MODE[1:0] field of the DMA2D_CR register.

12.3.7 DMA2D output PFC

The output PFC performs the pixel format conversion from 32 bits to the output format defined in the CM[2:0] field of the DMA2D output pixel format converter configuration register (DMA2D_OPFCCR).

The supported output formats are given in *Table 54: Supported color mode in output*

Table 54. Supported color mode in output

CM[2:0]	Color mode
000	ARGB8888
001	RGB888
010	RGB565
011	ARGB1555
100	ARGB4444

Note: To support the alternate format, the calculated alpha value is inverted setting the AI bit of the DMA2D_OPFCCR registers. This applies also to the Alpha value used in the DMA2D_OCOLR.

The R and B fields can also be swapped setting the RBS bit of the DMA2D_OPFCCR registers. This applies also to the RGB order used in the DMA2D_OCOLR.

12.3.8 DMA2D output FIFO

The output FIFO programs the pixels according to the color format defined in the output PFC.

The destination area is defined through a set of control registers:

- DMA2D output memory address register (DMA2D_OMAR)
- DMA2D output offset register (DMA2D_OOR**)**
- DMA2D number of lines register (number of lines and pixel per lines) (DMA2D_NLR**)**

If the DMA2D operates in register-to-memory mode, the configured output rectangle is filled by the color specified in the DMA2D output color register (DMA2D_OCOLR) which contains a fixed 32-bit, 24-bit or 16-bit value. The format is selected by the CM[2:0] field of the DMA2D_OPFCCR register.

The data are stored into the memory in the order defined in *Table 55: Data order in memory*

Table 55. Data order in memory

Color Mode	@ + 3	@ + 2	@ + 1	@ + 0
ARGB8888	A_0[7:0]	R_0[7:0]	G_0[7:0]	B_0[7:0]
RGB888	B_1[7:0]	R_0[7:0]	G_0[7:0]	B_0[7:0]
	G_2[7:0]	B_2[7:0]	R_1[7:0]	G_1[7:0]
	R_3[7:0]	G_3[7:0]	B_3[7:0]	R_2[7:0]
RGB565	R_1[4:0]G_1[5:3]	G_1[2:0]B_1[4:0]	R_0[4:0]G_0[5:3]	G_0[2:0]B_0[4:0]
ARGB1555	A_1[0]R_1[4:0]G_1[4:3]	G_1[2:0]B_1[4:0]	A_0[0]R_0[4:0]G_0[4:3]	G_0[2:0]B_0[4:0]
ARGB4444	A_1[3:0]R_1[3:0]	G_1[3:0]B_1[3:0]	A_0[3:0]R_0[3:0]	G_0[3:0]B_0[3:0]

The RGB888 aligned on 32-bit is supported through the ARGB8888 mode.

12.3.9 DMA2D AHB master port timer

An 8-bit timer is embedded into the AHB master port to provide an optional limitation of the bandwidth on the crossbar.

This timer is clocked by the AHB clock and counts a dead time between two consecutive accesses. This limits the bandwidth usage.

The timer enabling and the dead time value are configured through the AHB master port timer configuration register (DMA2D_AMPTCR).

12.3.10 DMA2D transactions

DMA2D transactions consist of a sequence of a given number of data transfers. The number of data and the width can be programmed by software.

Each DMA2D data transfer is composed of up to 4 steps:

1. Data loading from the memory location pointed by the DMA2D_FGMAR register and pixel format conversion as defined in DMA2D_FGCR.
2. Data loading from a memory location pointed by the DMA2D_BGMAR register and pixel format conversion as defined in DMA2D_BGCR.
3. Blending of all retrieved pixels according to the alpha channels resulting of the PFC operation on alpha values.
4. Pixel format conversion of the resulting pixels according to the DMA2D_OCR register and programming of the data to the memory location addressed through the DMA2D_OMAR register.

12.3.11 DMA2D configuration

Both source and destination data transfers can target peripherals and memories in the whole 4 Gbyte memory area, at addresses ranging between 0x0000 0000 and 0xFFFF FFFF.

The DMA2D can operate in any of the four following modes selected through MODE[1:0] bits of the DMA2D_CR register:

- Register-to-memory
- Memory-to-memory
- Memory-to-memory with PFC
- Memory-to-memory with PFC and blending

Register-to-memory

The register-to-memory mode is used to fill a user defined area with a predefined color.

The color format is set in the DMA2D_OPFCCR.

The DMA2D does not perform any data fetching from any source. It just writes the color defined in the DMA2D_OCOLR register to the area located at the address pointed by the DMA2D_OMAR and defined in the DMA2D_NLR and DMA2D_OOR.

Memory-to-memory

In memory-to-memory mode, the DMA2D does not perform any graphical data transformation. The foreground input FIFO acts as a buffer and the data are transferred

from the source memory location defined in DMA2D_FGMAR to the destination memory location pointed by DMA2D_OMAR.

The color mode programmed in the CM[3:0] bits of the DMA2D_FGPFCCR register defines the number of bits per pixel for both input and output.

The size of the area to be transferred is defined by the DMA2D_NLR and DMA2D_FGOR registers for the source, and by DMA2D_NLR and DMA2D_OOR registers for the destination.

Memory-to-memory with PFC

In this mode, the DMA2D performs a pixel format conversion of the source data and stores them in the destination memory location.

The size of the areas to be transferred are defined by the DMA2D_NLR and DMA2D_FGOR registers for the source, and by DMA2D_NLR and DMA2D_OOR registers for the destination.

Data are fetched from the location defined in the DMA2D_FGMAR register and processed by the foreground PFC. The original pixel format is configured through the DMA2D_FGPFCCR register.

If the original pixel format is direct color mode, then the color channels are all expanded to 8 bits.

If the pixel format is indirect color mode, the associated CLUT has to be loaded into the CLUT memory.

The CLUT loading can be done automatically by following the sequence below:

1. Set the CLUT address into the DMA2D_FGCMAR.
2. Set the CLUT size in the CS[7:0] bits of the DMA2D_FGPFCCR register.
3. Set the CLUT format (24 or 32 bits) in the CCM bit of the DMA2D_FGPFCCR register.
4. Start the CLUT loading by setting the START bit of the DMA2D_FGPFCCR register.

Once the CLUT loading is complete, the CTCIF flag of the DMA2D_IFR register is raised, and an interrupt is generated if the CTCIE bit is set in DMA2D_CR. The automatic CLUT loading process can not work in parallel with classical DMA2D transfers.

The CLUT can also be filled by the CPU or by any other master through the APB port. The access to the CLUT is not possible when a DMA2D transfer is ongoing and uses the CLUT (indirect color format).

In parallel to the color conversion process, the alpha value is added or changed depending on the value programmed in the DMA2D_FGPFCCR register. If the original image does not have an alpha channel, a default alpha value of 0xFF is automatically added to obtain a fully opaque pixel. The alpha value is modified according to the AM[1:0] bits of the DMA2D_FGPFCCR register:

- It can be unchanged.
- It can be replaced by the value defined in the ALPHA[7:0] value of the DMA2D_FGPFCCR register.
- It can be replaced by the original value multiplied by the ALPHA[7:0] value of the DMA2D_FGPFCCR register divided by 255.

The resulting 32-bit data are encoded by the OUT PFC into the format specified by the CM[2:0] field of the DMA2D_OPFCCR register. The output pixel format cannot be the indirect mode since no CLUT generation process is supported.

The processed data are written into the destination memory location pointed by DMA2D_OMAR.

Memory-to-memory with PFC and blending

In this mode, 2 sources are fetched in the foreground FIFO and background FIFO from the memory locations defined by DMA2D_FGMAR and DMA2D_BGMAR.

The two pixel format converters have to be configured as described in the memory-to-memory mode. Their configurations can be different as each pixel format converter are independent and have their own CLUT memory.

Once each pixel has been converted into 32 bits by their respective PFCs, they are blended according to the equation below:

$$\text{with } \alpha_{Mult} = \frac{\alpha_{FG} \cdot \alpha_{BG}}{255}$$

$$\alpha_{OUT} = \alpha_{FG} + \alpha_{BG} - \alpha_{Mult}$$

$$C_{OUT} = \frac{C_{FG} \cdot \alpha_{FG} + C_{BG} \cdot \alpha_{BG} - C_{BG} \cdot \alpha_{Mult}}{\alpha_{OUT}} \quad \text{with C = R or G or B}$$

Division are rounded to the nearest lower integer

The resulting 32-bit pixel value is encoded by the output PFC according to the specified output format, and the data are written into the destination memory location pointed by DMA2D_OMAR.

Configuration error detection

The DMA2D checks that the configuration is correct before any transfer. The configuration error interrupt flag is set by hardware when a wrong configuration is detected when a new transfer/automatic loading starts. An interrupt is then generated if the CEIE bit of the DMA2D_CR is set.

The wrong configurations that can be detected are listed below:

- Foreground CLUT automatic loading: MA bits of DMA2D_FGCMAR are not aligned with CCM of DMA2D_FGPFCCR.
- Background CLUT automatic loading: MA bits of DMA2D_BGCMAR are not aligned with CCM of DMA2D_BGPFCCR
- Memory transfer (except in register-to-memory mode): MA bits of DMA2D_FGMAR are not aligned with CM of DMA2D_FGPFCCR
- Memory transfer (except in register-to-memory mode): CM bits of DMA2D_FGPFCCR are invalid
- Memory transfer (except in register-to-memory mode): PL bits of DMA2D_NLR are odd while CM of DMA2D_FGPFCCR is A4 or L4
- Memory transfer (except in register-to-memory mode): LO bits of DMA2D_FGOR are odd while CM of DMA2D_FGPFCCR is A4 or L4

- Memory transfer (only in blending mode): MA bits of DMA2D_BGMAR are not aligned with the CM of DMA2D_BGPFCCR
- Memory transfer: (only in blending mode) CM bits of DMA2D_BGPFCCR are invalid
- Memory transfer (only in blending mode): PL bits of DMA2D_NLR odd while CM of DMA2D_BGPFCCR is A4 or L4
- Memory transfer (only in blending mode): LO bits of DMA2D_BGOR are odd while CM of DMA2D_BGPFCCR is A4 or L4
- Memory transfer (except in memory to memory mode): MA bits of DMA2D_OMAR are not aligned with CM bits of DMA2D_OPFCCR.
- Memory transfer (except in memory to memory mode): CM bits of DMA2D_OPFCCR are invalid
- Memory transfer: NL bits of DMA2D_NLR = 0
- Memory transfer: PL bits of DMA2D_NLR = 0

12.3.12 DMA2D transfer control (start, suspend, abort and completion)

Once the DMA2D is configured, the transfer can be launched by setting the START bit of the DMA2D_CR register. Once the transfer is completed, the START bit is automatically reset and the TCIF flag of the DMA2D_ISR register is raised. An interrupt can be generated if the TCIE bit of the DMA2D_CR is set.

The user application can suspend the DMA2D at any time by setting the SUSP bit of the DMA2D_CR register. The transaction can then be aborted by setting the ABORT bit of the DMA2D_CR register or can be restarted by resetting the SUSP bit of the DMA2D_CR register.

The user application can abort at any time an ongoing transaction by setting the ABORT bit of the DMA2D_CR register. In this case, the TCIF flag is not raised.

Automatic CLUT transfers can also be aborted or suspended by using the ABORT or the SUSP bit of the DMA2D_CR register.

12.3.13 Watermark

A watermark can be programmed to generate an interrupt when the last pixel of a given line has been written to the destination memory area.

The line number is defined in the LW[15:0] field of the DMA2D_LWR register.

When the last pixel of this line has been transferred, the TWIF flag of the DMA2D_ISR register is raised and an interrupt is generated if the TWIE bit of the DMA2D_CR is set.

12.3.14 Error management

Two kind of errors can be triggered:

- AHB master port errors signaled by the TEIF flag of the DMA2D_ISR register.
- Conflicts caused by CLUT access (CPU trying to access the CLUT while a CLUT loading or a DMA2D transfer is ongoing) signalled by the CAEIF flag of the DMA2D_ISR register.

Both flags are associated to their own interrupt enable flag in the DMA2D_CR register to generate an interrupt if need be (TEIE and CAEIE).

12.3.15 AHB dead time

To limit the AHB bandwidth usage, a dead time between two consecutive AHB accesses can be programmed.

This feature can be enabled by setting the EN bit in the DMA2D_AMTCR register.

The dead time value is stored in the DT[7:0] field of the DMA2D_AMTCR register. This value represents the guaranteed minimum number of cycles between two consecutive transactions on the AHB bus.

The update of the dead time value while the DMA2D is running is taken into account for the next AHB transfer.

12.4 DMA2D interrupts

An interrupt can be generated on the following events:

- Configuration error
- CLUT transfer complete
- CLUT access error
- Transfer watermark reached
- Transfer complete
- Transfer error

Separate interrupt enable bits are available for flexibility.

Table 56. DMA2D interrupt requests

Interrupt event	Event flag	Enable control bit
Configuration error	CEIF	CEIE
CLUT transfer complete	CTCIF	CTCIE
CLUT access error	CAEIF	CAEIE
Transfer watermark	TWF	TWIE
Transfer complete	TCIF	TCIE
Transfer error	TEIF	TEIE

12.5 DMA2D registers

12.5.1 DMA2D control register (DMA2D_CR)

Address offset: 0x0000

Reset value: 0x0000 0000

31	30	29	28	27	26	25	24	23	22	21	20	19	18	17	16
Res.	Res.	Res.	Res.	Res.	Res.	Res.	Res.	Res.	Res.	Res.	Res.	Res.	Res.	MODE[1:0]	
														rw	rw
15	14	13	12	11	10	9	8	7	6	5	4	3	2	1	0
Res.	Res.	CEIE	CTCIE	CAEIE	TWIE	TCIE	TEIE	Res.	Res.	Res.	Res.	Res.	ABORT	SUSP	START
		rw	rw	rw	rw	rw	rw						rs	rw	rs

Bits 31:18 Reserved, must be kept at reset value.

Bits 17:16 **MODE[1:0]**: DMA2D mode

These bits are set and cleared by software. They cannot be modified while a transfer is ongoing.

00: Memory-to-memory (FG fetch only)

01: Memory-to-memory with PFC (FG fetch only with FG PFC active)

10: Memory-to-memory with blending (FG and BG fetch with PFC and blending)

11: Register-to-memory (no FG nor BG, only output stage active)

Bits 15:14 Reserved, must be kept at reset value.

Bit 13 **CEIE**: Configuration Error Interrupt Enable

This bit is set and cleared by software.

0: CE interrupt disable

1: CE interrupt enable

Bit 12 **CTCIE**: CLUT transfer complete interrupt enable

This bit is set and cleared by software.

0: CTC interrupt disable

1: CTC interrupt enable

Bit 11 **CAEIE**: CLUT access error interrupt enable

This bit is set and cleared by software.

0: CAE interrupt disable

1: CAE interrupt enable

Bit 10 **TWIE**: Transfer watermark interrupt enable

This bit is set and cleared by software.

0: TW interrupt disable

1: TW interrupt enable

Bit 9 **TCIE**: Transfer complete interrupt enable

This bit is set and cleared by software.

0: TC interrupt disable

1: TC interrupt enable

Bit 8 **TEIE**: Transfer error interrupt enable

This bit is set and cleared by software.

0: TE interrupt disable

1: TE interrupt enable

Bits 7:3 Reserved, must be kept at reset value.

Bit 2 **ABORT**: Abort

This bit can be used to abort the current transfer. This bit is set by software and is automatically reset by hardware when the START bit is reset.

0: No transfer abort requested

1: Transfer abort requested

Bit 1 **SUSP**: Suspend

This bit can be used to suspend the current transfer. This bit is set and reset by software. It is automatically reset by hardware when the START bit is reset.

0: Transfer not suspended

1: Transfer suspended

Bit 0 **START**: Start

This bit can be used to launch the DMA2D according to the parameters loaded in the various configuration registers. This bit is automatically reset by the following events:

- At the end of the transfer
- When the data transfer is aborted by the user application by setting the ABORT bit in DMA2D_CR
- When a data transfer error occurs
- When the data transfer has not started due to a configuration error or another transfer operation already ongoing (automatic CLUT loading).

12.5.2 DMA2D interrupt status register (DMA2D_ISR)

Address offset: 0x0004

Reset value: 0x0000 0000

31	30	29	28	27	26	25	24	23	22	21	20	19	18	17	16
Res.	Res.	Res.	Res.	Res.	Res.	Res.	Res.	Res.	Res.	Res.	Res.	Res.	Res.	Res.	Res.

15	14	13	12	11	10	9	8	7	6	5	4	3	2	1	0
Res.	Res.	Res.	Res.	Res.	Res.	Res.	Res.	Res.	Res.	CEIF	CTCIF	CAEIF	TWIF	TCIF	TEIF
										r	r	r	r	r	r

Bits 31:6 Reserved, must be kept at reset value.

Bit 5 **CEIF**: Configuration error interrupt flag

This bit is set when the START bit of DMA2D_CR, DMA2DFGPFCCR or DMA2D_BGPFCCR is set and a wrong configuration has been programmed.

Bit 4 **CTCIF**: CLUT transfer complete interrupt flag

This bit is set when the CLUT copy from a system memory area to the internal DMA2D memory is complete.

Bit 3 **CAEIF**: CLUT access error interrupt flag

This bit is set when the CPU accesses the CLUT while the CLUT is being automatically copied from a system memory to the internal DMA2D.

Bit 2 **TWIF**: Transfer watermark interrupt flag

This bit is set when the last pixel of the watermarked line has been transferred.

Bit 1 **TCIF**: Transfer complete interrupt flag

This bit is set when a DMA2D transfer operation is complete (data transfer only).

Bit 0 **TEIF**: Transfer error interrupt flag

This bit is set when an error occurs during a DMA transfer (data transfer or automatic CLUT loading).

12.5.3 DMA2D interrupt flag clear register (DMA2D_IFCR)

Address offset: 0x0008

Reset value: 0x0000 0000

31	30	29	28	27	26	25	24	23	22	21	20	19	18	17	16
Res.	Res.	Res.	Res.	Res.	Res.	Res.	Res.	Res.	Res.	Res.	Res.	Res.	Res.	Res.	Res.

15	14	13	12	11	10	9	8	7	6	5	4	3	2	1	0
Res.	Res.	Res.	Res.	Res.	Res.	Res.	Res.	Res.	Res.	CCEIF	CCTCIF	CAECIF	CTWIF	CTCIF	CTEIF
										rc_w1	rc_w1	rc_w1	rc_w1	rc_w1	rc_w1

Bits 31:6 Reserved, must be kept at reset value.

Bit 5 **CCEIF**: Clear configuration error interrupt flag
Programming this bit to 1 clears the CEIF flag in the DMA2D_ISR register

Bit 4 **CCTCIF**: Clear CLUT transfer complete interrupt flag
Programming this bit to 1 clears the CTCIF flag in the DMA2D_ISR register

Bit 3 **CAECIF**: Clear CLUT access error interrupt flag
Programming this bit to 1 clears the CAEIF flag in the DMA2D_ISR register

Bit 2 **CTWIF**: Clear transfer watermark interrupt flag
Programming this bit to 1 clears the TWIF flag in the DMA2D_ISR register

Bit 1 **CTCIF**: Clear transfer complete interrupt flag
Programming this bit to 1 clears the TCIF flag in the DMA2D_ISR register

Bit 0 **CTEIF**: Clear Transfer error interrupt flag
Programming this bit to 1 clears the TEIF flag in the DMA2D_ISR register

12.5.4 DMA2D foreground memory address register (DMA2D_FGMAR)

Address offset: 0x000C

Reset value: 0x0000 0000

31	30	29	28	27	26	25	24	23	22	21	20	19	18	17	16
MA[31:16]															
rw	rw	rw	rw	rw	rw	rw	rw	rw	rw	rw	rw	rw	rw	rw	rw

15	14	13	12	11	10	9	8	7	6	5	4	3	2	1	0
MA[15:0]															
rw	rw	rw	rw	rw	rw	rw	rw	rw	rw	rw	rw	rw	rw	rw	rw

Bits 31:0 **MA[31:0]**: Memory address
Address of the data used for the foreground image. This register can only be written when data transfers are disabled. Once the data transfer has started, this register is read-only.
The address alignment must match the image format selected e.g. a 32-bit per pixel format must be 32-bit aligned, a 16-bit per pixel format must be 16-bit aligned and a 4-bit per pixel format must be 8-bit aligned.

12.5.5 DMA2D foreground offset register (DMA2D_FGOR)

Address offset: 0x0010

Reset value: 0x0000 0000

31	30	29	28	27	26	25	24	23	22	21	20	19	18	17	16
Res.	Res.	Res.	Res.	Res.	Res.	Res.	Res.	Res.	Res.	Res.	Res.	Res.	Res.	Res.	Res.

15	14	13	12	11	10	9	8	7	6	5	4	3	2	1	0
Res.	Res.	LO[13:0]													
		rw	rw	rw	rw	rw	rw	rw	rw	rw	rw	rw	rw	rw	rw

Bits 31:14 Reserved, must be kept at reset value.

Bits 13:0 **LO[13:0]**: Line offset

Line offset used for the foreground expressed in pixel. This value is used to generate the address. It is added at the end of each line to determine the starting address of the next line.

These bits can only be written when data transfers are disabled. Once a data transfer has started, they become read-only.

If the image format is 4-bit per pixel, the line offset must be even.

12.5.6 DMA2D background memory address register (DMA2D_BGMAR)

Address offset: 0x0014

Reset value: 0x0000 0000

31	30	29	28	27	26	25	24	23	22	21	20	19	18	17	16
MA[31:16]															
rw	rw	rw	rw	rw	rw	rw	rw	rw	rw	rw	rw	rw	rw	rw	rw

15	14	13	12	11	10	9	8	7	6	5	4	3	2	1	0
MA[15:0]															
rw	rw	rw	rw	rw	rw	rw	rw	rw	rw	rw	rw	rw	rw	rw	rw

Bits 31:0 **MA[31:0]**: Memory address

Address of the data used for the background image. This register can only be written when data transfers are disabled. Once a data transfer has started, this register is read-only.

The address alignment must match the image format selected e.g. a 32-bit per pixel format must be 32-bit aligned, a 16-bit per pixel format must be 16-bit aligned and a 4-bit per pixel format must be 8-bit aligned.

12.5.7 DMA2D background offset register (DMA2D_BGOR)

Address offset: 0x0018

Reset value: 0x0000 0000

31	30	29	28	27	26	25	24	23	22	21	20	19	18	17	16
Res.	Res.	Res.	Res.	Res.	Res.	Res.	Res.	Res.	Res.	Res.	Res.	Res.	Res.	Res.	Res.

15	14	13	12	11	10	9	8	7	6	5	4	3	2	1	0
Res.	Res.	LO[13:0]													
		rw	rw	rw	rw	rw	rw	rw	rw	rw	rw	rw	rw	rw	rw

Bits 31:14 Reserved, must be kept at reset value.

Bits 13:0 **LO[13:0]**: Line offset

Line offset used for the background image (expressed in pixel). This value is used for the address generation. It is added at the end of each line to determine the starting address of the next line.

These bits can only be written when data transfers are disabled. Once data transfer has started, they become read-only.

If the image format is 4-bit per pixel, the line offset must be even.

12.5.8 DMA2D foreground PFC control register (DMA2D_FGPFCCR)

Address offset: 0x001C

Reset value: 0x0000 0000

31	30	29	28	27	26	25	24	23	22	21	20	19	18	17	16
ALPHA[7:0]								Res.	Res.	RBS	AI	Res.	Res.	AM[1:0]	
rw	rw	rw	rw	rw	rw	rw	rw			rw	rw			rw	rw
15	14	13	12	11	10	9	8	7	6	5	4	3	2	1	0
CS[7:0]								Res.	Res.	START	CCM	CM[3:0]			
rw	rw	rw	rw	rw	rw	rw	rw			rs	rw	rw	rw	rw	rw

Bits 31:24 **ALPHA[7:0]**: Alpha value

These bits define a fixed alpha channel value which can replace the original alpha value or be multiplied by the original alpha value according to the alpha mode selected through the AM[1:0] bits.

These bits can only be written when data transfers are disabled. Once a transfer has started, they become read-only.

Bits 23:22 Reserved, must be kept at reset value.

Bit 21 **RBS**: Red Blue Swap

This bit allows to swap the R & B to support BGR or ABGR color formats. Once the transfer has started, this bit is read-only.

0: Regular mode (RGB or ARGB)

1: Swap mode (BGR or ABGR)

Bit 20 **AI**: AI: Alpha Inverted

This bit inverts the alpha value. Once the transfer has started, this bit is read-only.

0: Regular alpha

1: Inverted alpha

Bits 19:18 Reserved, must be kept at reset value.

Bits 17:16 **AM[1:0]**: Alpha mode

These bits select the alpha channel value to be used for the foreground image. They can only be written data the transfer are disabled. Once the transfer has started, they become read-only.

00: No modification of the foreground image alpha channel value

01: Replace original foreground image alpha channel value by ALPHA[7:0]

10: Replace original foreground image alpha channel value by ALPHA[7:0] multiplied with original alpha channel value

other configurations are meaningless

Bits 15:8 **CS[7:0]**: CLUT size

These bits define the size of the CLUT used for the foreground image. Once the CLUT transfer has started, this field is read-only.

The number of CLUT entries is equal to CS[7:0] + 1.

Bits 7:6 Reserved, must be kept at reset value.

Bit 5 **START**: Start

This bit can be set to start the automatic loading of the CLUT. It is automatically reset:

- at the end of the transfer
- when the transfer is aborted by the user application by setting the ABORT bit in DMA2D_CR
- when a transfer error occurs
- when the transfer has not started due to a configuration error or another transfer operation already ongoing (data transfer or automatic background CLUT transfer).

Bit 4 **CCM**: CLUT color mode

This bit defines the color format of the CLUT. It can only be written when the transfer is disabled. Once the CLUT transfer has started, this bit is read-only.

0: ARGB8888

1: RGB888

others: meaningless

Bits 3:0 **CM[3:0]**: Color mode

These bits defines the color format of the foreground image. They can only be written when data transfers are disabled. Once the transfer has started, they are read-only.

0000: ARGB8888

0001: RGB888

0010: RGB565

0011: ARGB1555

0100: ARGB4444

0101: L8

0110: AL44

0111: AL88

1000: L4

1001: A8

1010: A4

others: meaningless

12.5.9 DMA2D foreground color register (DMA2D_FGCOLR)

Address offset: 0x0020

Reset value: 0x0000 0000

31	30	29	28	27	26	25	24	23	22	21	20	19	18	17	16
Res.	Res.	Res.	Res.	Res.	Res.	Res.	Res.	RED[7:0]							
								rw	rw	rw	rw	rw	rw	rw	rw
15	14	13	12	11	10	9	8	7	6	5	4	3	2	1	0
GREEN[7:0]								BLUE[7:0]							
rw	rw	rw	rw	rw	rw	rw	rw	rw	rw	rw	rw	rw	rw	rw	rw

Bits 31:24 Reserved, must be kept at reset value.

Bits 23:16 **RED[7:0]**: Red value

These bits defines the red value for the A4 or A8 mode of the foreground image. They can only be written when data transfers are disabled. Once the transfer has started, they are read-only.

Bits 15:8 **GREEN[7:0]**: Green value

These bits defines the green value for the A4 or A8 mode of the foreground image. They can only be written when data transfers are disabled. Once the transfer has started, They are read-only.

Bits 7:0 **BLUE[7:0]**: Blue value

These bits defines the blue value for the A4 or A8 mode of the foreground image. They can only be written when data transfers are disabled. Once the transfer has started, They are read-only.

12.5.10 DMA2D background PFC control register (DMA2D_BGPFCCR)

Address offset: 0x0024

Reset value: 0x0000 0000

31	30	29	28	27	26	25	24	23	22	21	20	19	18	17	16
ALPHA[7:0]								Res.	Res.	RBS	AI	Res.	Res.	AM[1:0]	
rw	rw	rw	rw	rw	rw	rw	rw			rw	rw			rw	rw
15	14	13	12	11	10	9	8	7	6	5	4	3	2	1	0
CS[7:0]								Res.	Res.	START	CCM	CM[3:0]			
rw	rw	rw	rw	rw	rw	rw	rw			rs	rw	rw	rw	rw	rw

Bits 31:24 **ALPHA[7:0]**: Alpha value

These bits define a fixed alpha channel value which can replace the original alpha value or be multiplied with the original alpha value according to the alpha mode selected with bits AM[1:0]. These bits can only be written when data transfers are disabled. Once the transfer has started, they are read-only.

Bits 23:22 Reserved, must be kept at reset value.

Bit 21 **RBS**: Red Blue Swap

This bit allows to swap the R & B to support BGR or ABGR color formats. Once the transfer has started, this bit is read-only.

0: Regular mode (RGB or ARGB)

1: Swap mode (BGR or ABGR)

Bit 20 **AI**: AI: Alpha Inverted

This bit inverts the alpha value. Once the transfer has started, this bit is read-only.

0: Regular alpha

1: Inverted alpha

Bits 19:18 Reserved, must be kept at reset value.

Bits 17:16 **AM[1:0]**: Alpha mode

These bits define which alpha channel value to be used for the background image. These bits can only be written when data transfers are disabled. Once the transfer has started, they are read-only.

00: No modification of the foreground image alpha channel value

01: Replace original background image alpha channel value by ALPHA[7:0]

10: Replace original background image alpha channel value by ALPHA[7:0] multiplied with original alpha channel value

others: meaningless

Bits 15:8 **CS[7:0]**: CLUT size

These bits define the size of the CLUT used for the BG. Once the CLUT transfer has started, this field is read-only.

The number of CLUT entries is equal to CS[7:0] + 1.

Bits 7:6 Reserved, must be kept at reset value.

Bit 5 **START**: Start

This bit is set to start the automatic loading of the CLUT. This bit is automatically reset:

- at the end of the transfer
- when the transfer is aborted by the user application by setting the ABORT bit in the DMA2D_CR
- when a transfer error occurs
- when the transfer has not started due to a configuration error or another transfer operation already on going (data transfer or automatic foreground CLUT transfer).

Bit 4 **CCM**: CLUT Color mode

These bits define the color format of the CLUT. This register can only be written when the transfer is disabled. Once the CLUT transfer has started, this bit is read-only.

0: ARGB8888

1: RGB888

others: meaningless

Bits 3:0 **CM[3:0]**: Color mode

These bits define the color format of the foreground image. These bits can only be written when data transfers are disabled. Once the transfer has started, they are read-only.

0000: ARGB8888

0001: RGB888

0010: RGB565

0011: ARGB1555

0100: ARGB4444

0101: L8

0110: AL44

0111: AL88

1000: L4

1001: A8

1010: A4

others: meaningless

12.5.11 DMA2D background color register (DMA2D_BGCOLR)

Address offset: 0x0028

Reset value: 0x0000 0000

31	30	29	28	27	26	25	24	23	22	21	20	19	18	17	16
Res.	Res.	Res.	Res.	Res.	Res.	Res.	Res.	RED[7:0]							
								rw	rw	rw	rw	rw	rw	rw	rw
15	14	13	12	11	10	9	8	7	6	5	4	3	2	1	0
GREEN[7:0]								BLUE[7:0]							
rw	rw	rw	rw	rw	rw	rw	rw	rw	rw	rw	rw	rw	rw	rw	rw

Bits 31:24 Reserved, must be kept at reset value.

Bits 23:16 **RED[7:0]**: Red value

These bits define the red value for the A4 or A8 mode of the background. These bits can only be written when data transfers are disabled. Once the transfer has started, they are read-only.

Bits 15:8 **GREEN[7:0]**: Green value

These bits define the green value for the A4 or A8 mode of the background. These bits can only be written when data transfers are disabled. Once the transfer has started, they are read-only.

Bits 7:0 **BLUE[7:0]**: Blue value

These bits define the blue value for the A4 or A8 mode of the background. These bits can only be written when data transfers are disabled. Once the transfer has started, they are read-only.

12.5.12 DMA2D foreground CLUT memory address register (DMA2D_FGCMAR)

Address offset: 0x002C

Reset value: 0x0000 0000

31	30	29	28	27	26	25	24	23	22	21	20	19	18	17	16
MA[31:16]															
rw	rw	rw	rw	rw	rw	rw	rw	rw	rw	rw	rw	rw	rw	rw	rw
15	14	13	12	11	10	9	8	7	6	5	4	3	2	1	0
MA[15:0]															
rw	rw	rw	rw	rw	rw	rw	rw	rw	rw	rw	rw	rw	rw	rw	rw

Bits 31:0 **MA[31:0]**: Memory Address

Address of the data used for the CLUT address dedicated to the foreground image. This register can only be written when no transfer is ongoing. Once the CLUT transfer has started, this register is read-only.

If the foreground CLUT format is 32-bit, the address must be 32-bit aligned.

12.5.13 DMA2D background CLUT memory address register (DMA2D_BGCMAR)

Address offset: 0x0030

Reset value: 0x0000 0000

31	30	29	28	27	26	25	24	23	22	21	20	19	18	17	16
MA[31:16]															
rw	rw	rw	rw	rw	rw	rw	rw	rw	rw	rw	rw	rw	rw	rw	rw
15	14	13	12	11	10	9	8	7	6	5	4	3	2	1	0
MA[15:0]															
rw	rw	rw	rw	rw	rw	rw	rw	rw	rw	rw	rw	rw	rw	rw	rw

Bits 31:0 **MA[31:0]**: Memory address

Address of the data used for the CLUT address dedicated to the background image. This register can only be written when no transfer is on going. Once the CLUT transfer has started, this register is read-only.

If the background CLUT format is 32-bit, the address must be 32-bit aligned.

12.5.14 DMA2D output PFC control register (DMA2D_OPFCCR)

Address offset: 0x0034

Reset value: 0x0000 0000

31	30	29	28	27	26	25	24	23	22	21	20	19	18	17	16
Res.	Res.	Res.	Res.	Res.	Res.	Res.	Res.	Res.	Res.	RBS	AI	Res.	Res.	Res.	Res.
										rw	rw				
15	14	13	12	11	10	9	8	7	6	5	4	3	2	1	0
Res.	Res.	Res.	Res.	Res.	Res.	Res.	Res.	Res.	Res.	Res.	Res.	Res.	CM[2:0]		
													rw	rw	rw

Bits 31:22 Reserved, must be kept at reset value.

Bit 21 **RBS**: Red Blue Swap

This bit allows to swap the R & B to support BGR or ABGR color formats. Once the transfer has started, this bit is read-only.
0: Regular mode (RGB or ARGB)
1: Swap mode (BGR or ABGR)

Bit 20 **AI**: Alpha Inverted

This bit inverts the alpha value. Once the transfer has started, this bit is read-only.
0: Regular alpha
1: Inverted alpha

Bits 19:3 Reserved, must be kept at reset value.

Bits 2:0 **CM[2: 0]**: Color mode

These bits define the color format of the output image. These bits can only be written when data transfers are disabled. Once the transfer has started, they are read-only.
000: ARGB8888
001: RGB888
010: RGB565
011: ARGB1555
100: ARGB4444
others: meaningless

12.5.15 DMA2D output color register (DMA2D_OCOLR)

Address offset: 0x0038

Reset value: 0x0000 0000

31	30	29	28	27	26	25	24	23	22	21	20	19	18	17	16
ALPHA[7:0]								RED[7:0]							
rw	rw	rw	rw	rw	rw	rw	rw	rw	rw	rw	rw	rw	rw	rw	rw

15	14	13	12	11	10	9	8	7	6	5	4	3	2	1	0
GREEN[7:0]								BLUE[7:0]							
RED[4:0]					GREEN[5:0]						BLUE[4:0]				
A	RED[4:0]					GREEN[4:0]					BLUE[4:0]				
ALPHA[3:0]				RED[3:0]				GREEN[3:0]				BLUE[3:0]			
rw	rw	rw	rw	rw	rw	rw	rw	rw	rw	rw	rw	rw	rw	rw	rw

ARGB8888 or RGB888 color mode

Bits 31:24 **ALPHA[7:0]**: Alpha channel value in ARGB8888 mode otherwise reserved

These bits define the alpha channel of the output color. These bits can only be written when data transfers are disabled. Once the transfer has started, they are read-only.

Bits 23:16 **RED[7:0]**: Red value in ARGB8888 or RGB888 mode otherwise reserved

These bits define the red value of the output image. These bits can only be written when data transfers are disabled. Once the transfer has started, they are read-only.

Bits 15:8 **GREEN[7:0]**: Green value in ARGB8888 or RGB888

These bits define the green value of the output image. These bits can only be written when data transfers are disabled. Once the transfer has started, they are read-only.

Bits 7:0 **BLUE[7:0]**: Blue value in ARGB8888 or RGB888

These bits define the blue value of the output image. These bits can only be written when data transfers are disabled. Once the transfer has started, they are read-only.

RGB565 color mode

Bits 15:11 **RED[4:0]**: Red value in RGB565 mode

These bits define the red value of the output image. These bits can only be written when data transfers are disabled. Once the transfer has started, they are read-only.

Bits 12:5 **GREEN[5:0]**: Green value in RGB565 mode

These bits define the green value of the output image. These bits can only be written when data transfers are disabled. Once the transfer has started, they are read-only.

Bits 4:0 **BLUE[4:0]**: Blue value in RGB565 mode

These bits define the blue value of the output image. These bits can only be written when data transfers are disabled. Once the transfer has started, they are read-only.

ARGB1555 color mode

Bit 15 **A**: Alpha channel value in ARGB1555 mode

This bit defines the alpha channel of the output color. This bit can only be written when data transfers are disabled. Once the transfer has started, it is read-only.

Bits 14:10 **RED[4:0]**: Red value in ARGB1555 mode

These bits define the red value of the output image. These bits can only be written when data transfers are disabled. Once the transfer has started, they are read-only.

Bits 9:5 **GREEN[4:0]**: Green value in ARGB1555 mode

These bits define the green value of the output image. These bits can only be written when data transfers are disabled. Once the transfer has started, they are read-only.

Bits 4:0 **BLUE[4:0]**: Blue value in ARGB1555 mode

These bits define the blue value of the output image. These bits can only be written when data transfers are disabled. Once the transfer has started, they are read-only.

ARGB4444 color mode

Bits 15:12 **ALPHA[3:0]**: Alpha channel value in ARGB4444

This bit defines the alpha channel of the output color. This bit can only be written when data transfers are disabled. Once the transfer has started, it is read-only.

Bits 11:8 **RED[3:0]**: Red value in ARGB4444 mode

These bits define the red value of the output image. These bits can only be written when data transfers are disabled. Once the transfer has started, they are read-only.

Bits 7:4 **GREEN[3:0]**: Green value in ARGB4444 mode

These bits define the green value of the output image. These bits can only be written when data transfers are disabled. Once the transfer has started, they are read-only.

Bits 3:0 **BLUE[3:0]**: Blue value in ARGB4444 mode

These bits define the blue value of the output image. These bits can only be written when data transfers are disabled. Once the transfer has started, they are read-only.

12.5.16 DMA2D output memory address register (DMA2D_OMAR)

Address offset: 0x003C

Reset value: 0x0000 0000

31	30	29	28	27	26	25	24	23	22	21	20	19	18	17	16
MA[31:16]															
rw	rw	rw	rw	rw	rw	rw	rw	rw	rw	rw	rw	rw	rw	rw	rw
15	14	13	12	11	10	9	8	7	6	5	4	3	2	1	0
MA[15:0]															
rw	rw	rw	rw	rw	rw	rw	rw	rw	rw	rw	rw	rw	rw	rw	rw

Bits 31:0 **MA[31:0]**: Memory Address

Address of the data used for the output FIFO. These bits can only be written when data transfers are disabled. Once the transfer has started, they are read-only.

The address alignment must match the image format selected e.g. a 32-bit per pixel format must be 32-bit aligned and a 16-bit per pixel format must be 16-bit aligned.

12.5.17 DMA2D output offset register (DMA2D_OOR)

Address offset: 0x0040

Reset value: 0x0000 0000

31	30	29	28	27	26	25	24	23	22	21	20	19	18	17	16
Res.	Res.	Res.	Res.	Res.	Res.	Res.	Res.	Res.	Res.	Res.	Res.	Res.	Res.	Res.	Res.
15	14	13	12	11	10	9	8	7	6	5	4	3	2	1	0
Res.	Res.	LO[13:0]													
		rw	rw	rw	rw	rw	rw	rw	rw	rw	rw	rw	rw	rw	rw

Bits 31:14 Reserved, must be kept at reset value.

Bits 13:0 **LO[13:0]**: Line Offset

Line offset used for the output (expressed in pixels). This value is used for the address generation. It is added at the end of each line to determine the starting address of the next line. These bits can only be written when data transfers are disabled. Once the transfer has started, they are read-only.

12.5.18 DMA2D number of line register (DMA2D_NLR)

Address offset: 0x0044

Reset value: 0x0000 0000

31	30	29	28	27	26	25	24	23	22	21	20	19	18	17	16
Res.	Res.	PL[13:0]													
		rw	rw	rw	rw	rw	rw	rw	rw	rw	rw	rw	rw	rw	rw
15	14	13	12	11	10	9	8	7	6	5	4	3	2	1	0
NL[15:0]															
rw	rw	rw	rw	rw	rw	rw	rw	rw	rw	rw	rw	rw	rw	rw	rw

Bits 31:30 Reserved, must be kept at reset value.

Bits 29:16 **PL[13:0]**: Pixel per lines

Number of pixels per lines of the area to be transferred. These bits can only be written when data transfers are disabled. Once the transfer has started, they are read-only.

If any of the input image format is 4-bit per pixel, pixel per lines must be even.

Bits 15:0 **NL[15:0]**: Number of lines

Number of lines of the area to be transferred. These bits can only be written when data transfers are disabled. Once the transfer has started, they are read-only.

12.5.19 DMA2D line watermark register (DMA2D_LWR)

Address offset: 0x0048

Reset value: 0x0000 0000

31	30	29	28	27	26	25	24	23	22	21	20	19	18	17	16
Res.	Res.	Res.	Res.	Res.	Res.	Res.	Res.	Res.	Res.	Res.	Res.	Res.	Res.	Res.	Res.
15	14	13	12	11	10	9	8	7	6	5	4	3	2	1	0
LW[15:0]															
rw	rw	rw	rw	rw	rw	rw	rw	rw	rw	rw	rw	rw	rw	rw	rw

Bits 31:16 Reserved, must be kept at reset value.

Bits 15:0 **LW[15:0]**: Line watermark

These bits allow to configure the line watermark for interrupt generation.

An interrupt is raised when the last pixel of the watermarked line has been transferred. These bits can only be written when data transfers are disabled. Once the transfer has started, they are read-only.

12.5.20 DMA2D AHB master timer configuration register (DMA2D_AMTCR)

Address offset: 0x004C

Reset value: 0x0000 0000

31	30	29	28	27	26	25	24	23	22	21	20	19	18	17	16
Res.	Res.	Res.	Res.	Res.	Res.	Res.	Res.	Res.	Res.	Res.	Res.	Res.	Res.	Res.	Res.
15	14	13	12	11	10	9	8	7	6	5	4	3	2	1	0
DT[7:0]								Res.	Res.	Res.	Res.	Res.	Res.	Res.	EN
rw	rw	rw	rw	rw	rw	rw	rw								rw

Bits 31:16 Reserved, must be kept at reset value.

Bits 15:8 **DT[7:0]**: Dead Time

Dead time value in the AHB clock cycle inserted between two consecutive accesses on the AHB master port. These bits represent the minimum guaranteed number of cycles between two consecutive AHB accesses.

Bits 7:1 Reserved, must be kept at reset value.

Bit 0 **EN**: Enable

Enables the dead time functionality.

12.5.21 DMA2D foreground CLUT (DMA2D_FGCLUT[y])

Address offset: 0x0400 + 4*y, y=0..255

Reset value: 0xXXXX XXXX

31	30	29	28	27	26	25	24	23	22	21	20	19	18	17	16
ALPHA<y>[7:0]								RED<y>[7:0]							
rw	rw	rw	rw	rw	rw	rw	rw	rw	rw	rw	rw	rw	rw	rw	rw
15	14	13	12	11	10	9	8	7	6	5	4	3	2	1	0
GREEN<y>[7:0]								BLUE<y>[7:0]							
rw	rw	rw	rw	rw	rw	rw	rw	rw	rw	rw	rw	rw	rw	rw	rw

Bits 31:24 **ALPHA<y>[7:0]**: Alpha <y>

Alpha value for index <y> for the foreground.

Bits 23:16 **RED<y>[7:0]**: Red <y>

Red value for index <y> for the foreground.

Bits 15:8 **GREEN<y>[7:0]**: Green <y>

Green value for index <y> for the foreground.

Bits 7:0 **BLUE<y>[7:0]**: Blue <y>

Blue value for index <y> for the foreground.

12.5.22 DMA2D background CLUT (DMA2D_BGCLUT[y])

Address offset: 0x0800 + 4*y, y=0..255

Reset value: 0xXXXX XXXX

31	30	29	28	27	26	25	24	23	22	21	20	19	18	17	16
ALPHA<y>[7:0]								RED<y>[7:0]							
rw	rw	rw	rw	rw	rw	rw	rw	rw	rw	rw	rw	rw	rw	rw	rw
15	14	13	12	11	10	9	8	7	6	5	4	3	2	1	0
GREEN<y>[7:0]								BLUE<y>[7:0]							
rw	rw	rw	rw	rw	rw	rw	rw	rw	rw	rw	rw	rw	rw	rw	rw

Bits 31:24 **ALPHA<y>[7:0]**: Alpha <y>
Alpha value for index <y> for the background.

Bits 23:16 **RED<y>[7:0]**: Red <y>
Red value for index <y> for the background.

Bits 15:8 **GREEN<y>[7:0]**: Green <y>
Green value for index <y> for the background.

Bits 7:0 **BLUE<y>[7:0]**: Blue <y>
Blue value for index <y> for the background.

12.5.23 DMA2D register map

The following table summarizes the DMA2D registers. Refer to *Section 2.2: Memory organization* for the DMA2D register base address.

Table 57. DMA2D register map and reset values

Offset	Register	31	30	29	28	27	26	25	24	23	22	21	20	19	18	17	16	15	14	13	12	11	10	9	8	7	6	5	4	3	2	1	0
0x0000	DMA2D_CR	Res.	Res.	Res.	Res.	Res.	Res.	Res.	Res.	Res.	Res.	Res.	Res.	Res.	Res.	MODE[1:0]		Res.	Res.	CEIE	CTCIE	CAEIE	TWIE	TCIE	TEIE	Res.	Res.	Res.	Res.	Res.	ABORT	SUSP	START
	Reset value															0	0			0	0	0	0	0	0						0	0	0
0x0004	DMA2D_ISR	Res.	Res.	Res.	Res.	Res.	Res.	Res.	Res.	Res.	Res.	Res.	Res.	Res.	Res.	Res.	Res.	Res.	Res.	Res.	Res.	Res.	Res.	Res.	Res.	Res.	Res.	CEIF	CTCIF	CAEIF	TWIF	TCIF	TEIF
	Reset value																											0	0	0	0	0	0
0x0008	DMA2D_IFCR	Res.	Res.	Res.	Res.	Res.	Res.	Res.	Res.	Res.	Res.	Res.	Res.	Res.	Res.	Res.	Res.	Res.	Res.	Res.	Res.	Res.	Res.	Res.	Res.	Res.	Res.	CCEIF	CCTCIF	CAECIF	CTWIF	CTCIF	CTEIF
	Reset value																											0	0	0	0	0	0
0x000C	DMA2D_FGMAR	MA[31:0]																															
	Reset value	0	0	0	0	0	0	0	0	0	0	0	0	0	0	0	0	0	0	0	0	0	0	0	0	0	0	0	0	0	0	0	0
0x0010	DMA2D_FGOR	Res.	Res.	Res.	Res.	Res.	Res.	Res.	Res.	Res.	Res.	Res.	Res.	Res.	Res.	Res.	Res.	Res.	Res.	LO[13:0]													
	Reset value																			0	0	0	0	0	0	0	0	0	0	0	0	0	0
0x0014	DMA2D_BGMAR	MA[31:0]																															
	Reset value	0	0	0	0	0	0	0	0	0	0	0	0	0	0	0	0	0	0	0	0	0	0	0	0	0	0	0	0	0	0	0	0
0x0018	DMA2D_BGOR	Res.	Res.	Res.	Res.	Res.	Res.	Res.	Res.	Res.	Res.	Res.	Res.	Res.	Res.	Res.	Res.	Res.	Res.	LO[13:0]													
	Reset value																			0	0	0	0	0	0	0	0	0	0	0	0	0	0
0x001C	DMA2D_FGPFCCR	ALPHA[7:0]								Res.	Res.	RBS	AI	Res.	Res.	AM[1:0]		CS[7:0]								Res.	Res.	START	CCM	CM[3:0]			
	Reset value	0	0	0	0	0	0	0	0			0	0			0	0	0	0	0	0	0	0	0	0			0	0	0	0	0	0
0x0020	DMA2D_FGCOLR	Res.	Res.	Res.	Res.	Res.	Res.	Res.	Res.	RED[7:0]								GREEN[7:0]								BLUE[7:0]							
	Reset value									0	0	0	0	0	0	0	0	0	0	0	0	0	0	0	0	0	0	0	0	0	0	0	0
0x0024	DMA2D_BGPFCCR	ALPHA[7:0]								Res.	Res.	RBS	AI	Res.	Res.	AM[1:0]		CS[7:0]								Res.	Res.	START	CCM	CM[3:0]			
	Reset value	0	0	0	0	0	0	0	0			0	0			0	0	0	0	0	0	0	0	0	0			0	0	0	0	0	0
0x0028	DMA2D_BGCOLR	Res.	Res.	Res.	Res.	Res.	Res.	Res.	Res.	RED[7:0]								GREEN[7:0]								BLUE[7:0]							
	Reset value									0	0	0	0	0	0	0	0	0	0	0	0	0	0	0	0	0	0	0	0	0	0	0	0
0x002C	DMA2D_FGCMAR	MA[31:0]																															
	Reset value	0	0	0	0	0	0	0	0	0	0	0	0	0	0	0	0	0	0	0	0	0	0	0	0	0	0	0	0	0	0	0	0
0x0030	DMA2D_BGCMAR	MA[31:0]																															
	Reset value	0	0	0	0	0	0	0	0	0	0	0	0	0	0	0	0	0	0	0	0	0	0	0	0	0	0	0	0	0	0	0	0
0x0034	DMA2D_OPFCCR	Res.	Res.	Res.	Res.	Res.	Res.	Res.	Res.	Res.	Res.	RBS	AI	Res.	Res.	Res.	Res.	Res.	Res.	Res.	Res.	Res.	Res.	Res.	Res.	Res.	Res.	Res.	Res.	Res.	CM[2:0]		
	Reset value											0	0																		0	0	0

Table 57. DMA2D register map and reset values (continued)

Offset	Register	31	30	29	28	27	26	25	24	23	22	21	20	19	18	17	16	15	14	13	12	11	10	9	8	7	6	5	4	3	2	1	0
0x0038	DMA2D_OCOLR	ALPHA[7:0]								RED[7:0]								GREEN[7:0]								BLUE[7:0]							
		Res.	Res.	Res.	Res.	Res.	Res.	Res.	Res.	Res.	Res.	Res.	Res.	Res.	Res.	Res.	Res.	RED[4:0]					GREEN[5:0]						BLUE[4:0]				
		Res.	Res.	Res.	Res.	Res.	Res.	Res.	Res.	Res.	Res.	Res.	Res.	Res.	Res.	Res.	Res.	A	RED[4:0]					GREEN[4:0]					BLUE[4:0]				
		Res.	Res.	Res.	Res.	Res.	Res.	Res.	Res.	Res.	Res.	Res.	Res.	Res.	Res.	Res.	Res.	ALPHA[3:0]				RED[3:0]				GREEN[3:0]				BLUE[3:0]			
	Reset value	0	0	0	0	0	0	0	0	0	0	0	0	0	0	0	0	0	0	0	0	0	0	0	0	0	0	0	0	0	0	0	0
0x003C	DMA2D_OMAR	MA[31:0]																															
	Reset value	0	0	0	0	0	0	0	0	0	0	0	0	0	0	0	0	0	0	0	0	0	0	0	0	0	0	0	0	0	0	0	0
0x0040	DMA2D_OOR	Res.	Res.	Res.	Res.	Res.	Res.	Res.	Res.	Res.	Res.	Res.	Res.	Res.	Res.	Res.	Res.	Res.	Res.	LO[13:0]													
	Reset value																			0	0	0	0	0	0	0	0	0	0	0	0	0	0
0x0044	DMA2D_NLR	Res.	Res.	PL[13:0]														NL[15:0]															
	Reset value			0	0	0	0	0	0	0	0	0	0	0	0	0	0	0	0	0	0	0	0	0	0	0	0	0	0	0	0	0	0
0x0048	DMA2D_LWR	Res.	Res.	Res.	Res.	Res.	Res.	Res.	Res.	Res.	Res.	Res.	Res.	Res.	Res.	Res.	Res.	LW[15:0]															
	Reset value																	0	0	0	0	0	0	0	0	0	0	0	0	0	0	0	0
0x004C	DMA2D_AMTCR	Res.	Res.	Res.	Res.	Res.	Res.	Res.	Res.	Res.	Res.	Res.	Res.	Res.	Res.	Res.	Res.	DT[7:0]								Res.	Res.	Res.	Res.	Res.	Res.	Res.	EN
	Reset value																	0	0	0	0	0	0	0	0								0
0x0050-0x03FC	Reserved	Reserved																															
0x0400-0x07FC	DMA2D_FGCLUT	ALPHA<y>[7:0]								RED<y>[7:0]								GREEN<y>[7:0]								BLUE<y>[7:0]							
	Reset value	X	X	X	X	X	X	X	X	X	X	X	X	X	X	X	X	X	X	X	X	X	X	X	X	X	X	X	X	X	X	X	X
0x0800-0x0BFC	DMA2D_BGCLUT	ALPHA<y>[7:0]								RED<y>[7:0]								GREEN<y>[7:0]								BLUE<y>[7:0]							
	Reset value	X	X	X	X	X	X	X	X	X	X	X	X	X	X	X	X	X	X	X	X	X	X	X	X	X	X	X	X	X	X	X	X

Refer to *Section 2.2 on page 75* for the register boundary addresses.

13 Nested vectored interrupt controller (NVIC)

13.1 NVIC main features

- 82 (for STM32L47x/L48x devices), 91 (for STM32L49x/L4Ax devices) maskable interrupt channels (not including the sixteen Cortex®-M4 with FPU interrupt lines)
- 16 programmable priority levels (4 bits of interrupt priority are used)
- Low-latency exception and interrupt handling
- Power management control
- Implementation of System Control Registers

The NVIC and the processor core interface are closely coupled, which enables low latency interrupt processing and efficient processing of late arriving interrupts.

All interrupts including the core exceptions are managed by the NVIC. For more information on exceptions and NVIC programming, refer to the PM0214 programming manual for Cortex™-M4 products.

13.2 SysTick calibration value register

The SysTick calibration value is set to 0x4000270F, which gives a reference time base of 1 ms with the SysTick clock set to 10 MHz (max $f_{HCLK}/8$).

13.3 Interrupt and exception vectors

The grey rows in *Table 58* describe the vectors without specific position.

Table 58. STM32L47x/L48x/L49x/L4Ax vector table

Position	Priority	Type of priority	Acronym	Description	Address
-	-	-	-	Reserved	0x0000 0000
-	-3	fixed	Reset	Reset	0x0000 0004
-	-2	fixed	NMI	Non maskable interrupt. The RCC Clock Security System (CSS) is linked to the NMI vector.	0x0000 0008
-	-1	fixed	HardFault	All classes of fault	0x0000 000C
-	0	settable	MemManage	Memory management	0x0000 0010
-	1	settable	BusFault	Pre-fetch fault, memory access fault	0x0000 0014
-	2	settable	UsageFault	Undefined instruction or illegal state	0x0000 0018
-	-	-	-	Reserved	0x0000 001C - 0x0000 0028
-	3	settable	SVCall	System service call via SWI instruction	0x0000 002C
-	4	settable	Debug	Monitor	0x0000 0030
-	-	-	-	Reserved	0x0000 0034
-	5	settable	PendSV	Pendable request for system service	0x0000 0038
-	6	settable	SysTick	System tick timer	0x0000 003C
0	7	settable	WWDG	Window Watchdog interrupt	0x0000 0040
1	8	settable	PVD_PVM	PVD/PVM1/PVM2/PVM3/PVM4 through EXTI lines 16/35/36/37/38 interrupts	0x0000 0044
2	9	settable	RTC_TAMP_STAMP /CSS_LSE	RTC Tamper or TimeStamp /CSS on LSE through EXTI line 19 interrupts	0x0000 0048
3	10	settable	RTC_WKUP	RTC Wakeup timer through EXTI line 20 interrupt	0x0000 004C
4	11	settable	FLASH	Flash global interrupt	0x0000 0050
5	12	settable	RCC	RCC global interrupt	0x0000 0054
6	13	settable	EXTI0	EXTI Line0 interrupt	0x0000 0058
7	14	settable	EXTI1	EXTI Line1 interrupt	0x0000 005C
8	15	settable	EXTI2	EXTI Line2 interrupt	0x0000 0060
9	16	settable	EXTI3	EXTI Line3 interrupt	0x0000 0064
10	17	settable	EXTI4	EXTI Line4 interrupt	0x0000 0068
11	18	settable	DMA1_CH1	DMA1 channel 1 interrupt	0x0000 006C

Table 58. STM32L47x/L48x/L49x/L4Ax vector table (continued)

Position	Priority	Type of priority	Acronym	Description	Address
12	19	settable	DMA1_CH2	DMA1 channel 2 interrupt	0x0000 0070
13	20	settable	DMA1_CH3	DMA1 channel 3 interrupt	0x0000 0074
14	21	settable	DMA1_CH4	DMA1 channel 4 interrupt	0x0000 0078
15	22	settable	DMA1_CH5	DMA1 channel 5 interrupt	0x0000 007C
16	23	settable	DMA1_CH6	DMA1 channel 6 interrupt	0x0000 0080
17	24	settable	DMA1_CH7	DMA1 channel 7 interrupt	0x0000 0084
18	25	settable	ADC1_2	ADC1 and ADC2 global interrupt	0x0000 0088
19	26	settable	CAN1_TX	CAN1_TX interrupts	0x0000 008C
20	27	settable	CAN1_RX0	CAN1_RX0 interrupts	0x0000 0090
21	28	settable	CAN1_RX1	CAN1_RX1 interrupt	0x0000 0094
22	29	settable	CAN1_SCE	CAN1_SCE interrupt	0x0000 0098
23	30	settable	EXTI9_5	EXTI Line[9:5] interrupts	0x0000 009C
24	31	settable	TIM1_BRK/TIM15	TIM1 Break/TIM15 global interrupts	0x0000 00A0
25	32	settable	TIM1_UP/TIM16	TIM1 Update/TIM16 global interrupts	0x0000 00A4
26	33	settable	TIM1_TRG_COM /TIM17	TIM1 trigger and commutation/TIM17 interrupts	0x0000 00A8
27	34	settable	TIM1_CC	TIM1 capture compare interrupt	0x0000 00AC
28	35	settable	TIM2	TIM2 global interrupt	0x0000 00B0
29	36	settable	TIM3	TIM3 global interrupt	0x0000 00B4
30	37	settable	TIM4	TIM4 global interrupt	0x0000 00B8
31	38	settable	I2C1_EV	I2C1 event interrupt	0x0000 00BC
32	39	settable	I2C1_ER	I2C1 error interrupt	0x0000 00C0
33	40	settable	I2C2_EV	I2C2 event interrupt	0x0000 00C4
34	41	settable	I2C2_ER	I2C2 error interrupt	0x0000 00C8
35	42	settable	SPI1	SPI1 global interrupt	0x0000 00CC
36	43	settable	SPI2	SPI2 global interrupt	0x0000 00D0
37	44	settable	USART1	USART1 global interrupt	0x0000 00D4
38	45	settable	USART2	USART2 global interrupt	0x0000 00D8
39	46	settable	USART3	USART3 global interrupt	0x0000 00DC
40	47	settable	EXTI15_10	EXTI Line[15:10] interrupts	0x0000 00E0
41	48	settable	RTC_ALARM	RTC alarms through EXTI line 18 interrupts	0x0000 00E4
42	49	settable	DFSDM1_FLT3	DFSDM1_FLT3 global interrupt	0x0000 00E8
43	50	settable	TIM8_BRK	TIM8 Break interrupt	0x0000 00EC

Table 58. STM32L47x/L48x/L49x/L4Ax vector table (continued)

Position	Priority	Type of priority	Acronym	Description	Address
44	51	settable	TIM8_UP	TIM8 Update interrupt	0x0000 00F0
45	52	settable	TIM8_TRG_COM	TIM8 trigger and commutation interrupt	0x0000 00F4
46	53	settable	TIM8_CC	TIM8 capture compare interrupt	0x0000 00F8
47	54	settable	ADC3	ADC3 global interrupt	0x0000 00FC
48	55	settable	FMC	FMC global interrupt	0x0000 0100
49	56	settable	SDMMC1	SDMMC1 global interrupt	0x0000 0104
50	57	settable	TIM5	TIM5 global interrupt	0x0000 0108
51	58	settable	SPI3	SPI3 global interrupt	0x0000 010C
52	59	settable	UART4	UART4 global interrupt	0x0000 0110
53	60	settable	UART5	UART5 global interrupt	0x0000 0114
54	61	settable	TIM6_DACUNDER	TIM6 global and DAC1 underrun interrupts	0x0000 0118
55	62	settable	TIM7	TIM7 global interrupt	0x0000 011C
56	63	settable	DMA2_CH1	DMA2 channel 1 interrupt	0x0000 0120
57	64	settable	DMA2_CH2	DMA2 channel 2 interrupt	0x0000 0124
58	65	settable	DMA2_CH3	DMA2 channel 3 interrupt	0x0000 0128
59	66	settable	DMA2_CH4	DMA2 channel 4 interrupt	0x0000 012C
60	67	settable	DMA2_CH5	DMA2 channel 5 interrupt	0x0000 0130
61	68	settable	DFSDM1_FLT0	DFSDM1_FLT0 global interrupt	0x0000 0134
62	69	settable	DFSDM1_FLT1	DFSDM1_FLT1 global interrupt	0x0000 0138
63	70	settable	DFSDM1_FLT2	DFSDM1_FLT2 global interrupt	0x0000 013C
64	71	settable	COMP	COMP1/COMP2 through EXTI lines 21/22 interrupts	0x0000 0140
65	72	settable	LPTIM1	LPTIM1 global interrupt	0x0000 0144
66	73	settable	LPTIM2	LPTIM2 global interrupt	0x0000 0148
67	74	settable	OTG_FS(1)	OTG_FS global interrupt	0x0000 014C
68	75	settable	DMA2_CH6	DMA2 channel 6 interrupt	0x0000 0150
69	76	settable	DMA2_CH7	DMA2 channel 7 interrupt	0x0000 0154
70	77	settable	LPUART1	LPUART1 global interrupt	0x0000 0158
71	78	settable	QUADSPI	QUADSPI global interrupt	0x0000 015C
72	79	settable	I2C3_EV	I2C3 event interrupt	0x0000 0160
73	80	settable	I2C3_ER	I2C3 error interrupt	0x0000 0164
74	81	settable	SAI1	SAI1 global interrupt	0x0000 0168
75	82	settable	SAI2	SAI2 global interrupt	0x0000 016C

Table 58. STM32L47x/L48x/L49x/L4Ax vector table (continued)

Position	Priority	Type of priority	Acronym	Description	Address
76	83	settable	SWPMI1	SWPMI1 global interrupt	0x0000 0170
77	84	settable	TSC	TSC global interrupt	0x0000 0174
78	85	settable	LCD(2)	LCD global interrupt	0x0000 0178
79	86	settable	AES(3)	AES global interrupt	0x0000 017C
80	87	settable	RNG	RNG global interrupt	0x0000 0180
81	88	settable	FPU	Floating point interrupt	0x0000 0184
STM32L49x/L4Ax devices					
82	89	settable	HASH and CRS	HASH and CRS interrupt	0x0000 0188
83	90	settable	I2C4_EV	I2C4 event interrupt	0x0000 018C
84	91	settable	I2C4_ER	I2C4 error interrupt	0x0000 0190
85	92	settable	DCMI	DCMI global interrupt	0x0000 0194
86	93	settable	CAN2_TX	CAN2 TX interrupt	0x0000 0198
87	94	settable	CAN2_RX0	CAN2 RX0 interrupt	0x0000 019C
88	95	settable	CAN2_RX1	CAN2 RX1 interrupt	0x0000 01A0
89	96	settable	CAN2_SCE	CAN SCE interrupt	0x0000 01A4
90	97	settable	DMA2D	DMA2D global interrupt	0x0000 01A8

1. Available on STM32L4x5/L4x6 devices only.
2. Available on STM32L4x6 devices only.
3. Available on STM32L486/L4A6 devices only

14 Extended interrupts and events controller (EXTI)

14.1 Introduction

The EXTI main features are as follows:

- Generation of up to 40 (STM32L47x/L48x devices), up to 41 (STM32L49x/L4Ax devices) event/interrupt requests
  - 26 configurable lines
  - 14 direct lines (STM32L47x/L48x devices), 15 direct lines (STM32L49x/L4Ax devices)
- Independent mask on each event/interrupt line
- Configurable rising or falling edge (configurable lines only)
- Dedicated status bit (configurable lines only)
- Emulation of event/interrupt requests (configurable lines only)

14.2 EXTI main features

The extended interrupts and events controller (EXTI) manages the external and internal asynchronous events/interrupts and generates the event request to the CPU/Interrupt Controller and a wake-up request to the Power Controller.

The EXTI allows the management of up to 40 (STM32L47x/L48x devices), up to 41 (STM32L49x/L4Ax devices) event lines which can wake up from the Stop 0 and Stop 1 modes. Not all events can wake up from the Stop 2 mode (refer to *Table 59: EXTI lines connections*).

The lines are either configurable or direct:

- The lines are configurable: the active edge can be chosen independently, and a status flag indicates the source of the interrupt. The configurable lines are used by the I/Os external interrupts, and by few peripherals.
- The lines are direct: they are used by some peripherals to generate a wakeup from Stop event or interrupt. The status flag is provided by the peripheral.

Each line can be masked independently for an interrupt or an event generation.

This controller also allows to emulate events or interrupts by software, multiplexed with the corresponding hardware event line, by writing to a dedicated register.

14.3 EXTI functional description

For the configurable interrupt lines, the interrupt line should be configured and enabled in order to generate an interrupt. This is done by programming the two trigger registers with the desired edge detection and by enabling the interrupt request by writing a ‘1’ to the corresponding bit in the interrupt mask register. When the selected edge occurs on the interrupt line, an interrupt request is generated. The pending bit corresponding to the interrupt line is also set. This request is cleared by writing a ‘1’ in the pending register.

For the direct interrupt lines, the interrupt is enabled by default in the interrupt mask register and there is no corresponding pending bit in the pending register.

To generate an event, the event line should be configured and enabled. This is done by programming the two trigger registers with the desired edge detection and by enabling the event request by writing a ‘1’ to the corresponding bit in the event mask register. When the selected edge occurs on the event line, an event pulse is generated. The pending bit corresponding to the event line is not set.

For the configurable lines, an interrupt/event request can also be generated by software by writing a ‘1’ in the software interrupt/event register.

Note: The interrupts or events associated to the direct lines are triggered only when the system is in Stop mode. If the system is still running, no interrupt/event is generated by the EXTI.

14.3.1 EXTI block diagram

The extended interrupt/event block diagram is shown on *Figure 33*.

Figure 33. Configurable interrupt/event block diagram

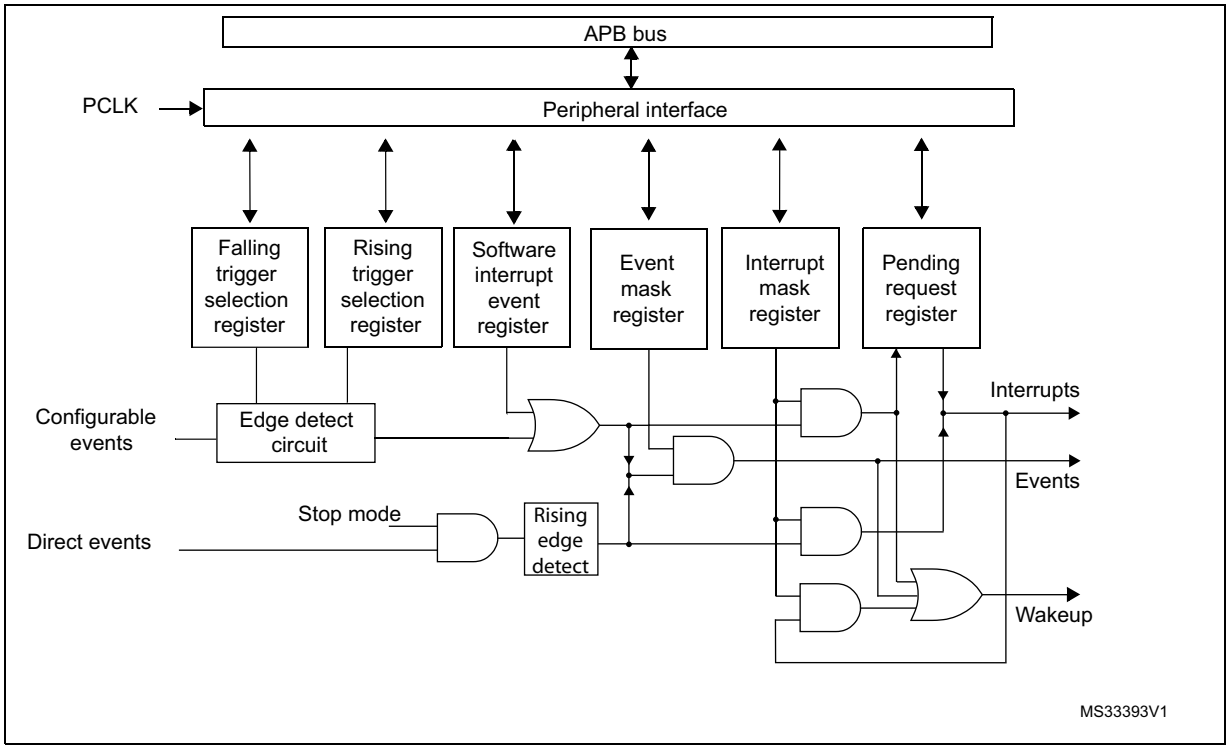

14.3.2 Wakeup event management

The STM32L47x/L48x/L49x/L4Ax is able to handle external or internal events in order to wake up the core (WFE). The wakeup event can be generated either by:

- enabling an interrupt in the peripheral control register but not in the NVIC, and enabling the SEVONPEND bit in the Cortex™-M4 System Control register. When the MCU resumes from WFE, the EXTI peripheral interrupt pending bit and the peripheral NVIC IRQ channel pending bit (in the NVIC interrupt clear pending register) have to be cleared
- or by configuring an EXTI line in event mode. When the CPU resumes from WFE, it is not necessary to clear the peripheral interrupt pending bit or the NVIC IRQ channel pending bit as the pending bit corresponding to the event line is not set.

14.3.3 Peripherals asynchronous Interrupts

Some peripherals are able to generate events when the system is in run mode and also when the system is in Stop mode, allowing to wake up the system from Stop mode.

To accomplish this, the peripheral generates both a synchronized (to the system clock, e.g. APB clock) and an asynchronous version of the event. This asynchronous event is connected to an EXTI direct line.

Note: Few peripherals with wakeup from Stop capability are connected to an EXTI configurable line. In this case, the EXTI configuration is necessary to allow the wakeup from Stop mode.

14.3.4 Hardware interrupt selection

To configure a line as an interrupt source, use the following procedure:

1. Configure the corresponding mask bit in the EXTI_IMR register.
2. Configure the Trigger Selection bits of the Interrupt line (EXTI_RTSR and EXTI_FTSR).
3. Configure the enable and mask bits that control the NVIC IRQ channel mapped to the EXTI so that an interrupt coming from one of the EXTI lines can be correctly acknowledged.

Note: The direct lines do not require any EXTI configuration.

14.3.5 Hardware event selection

To configure a line as an event source, use the following procedure:

1. Configure the corresponding mask bit in the EXTI_EMR register.
2. Configure the Trigger Selection bits of the Event line (EXTI_RTSR and EXTI_FTSR).

14.3.6 Software interrupt/event selection

Any of the configurable lines can be configured as a software interrupt/event line. The procedure to generate a software interrupt is as follows:

1. Configure the corresponding mask bit (EXTI_IMR, EXTI_EMR).
2. Set the required bit of the software interrupt register (EXTI_SWIER).

14.4 EXTI interrupt/event line mapping

In the STM32L47x/L48x/L49x/L4Ax, 40 (STM32L47x/L48x devices), up to 41 (STM32L49x/L4Ax devices) interrupt/event lines are available. The GPIOs are connected to 16 configurable interrupt/event lines (see *Figure 34*).

Figure 34. External interrupt/event GPIO mapping

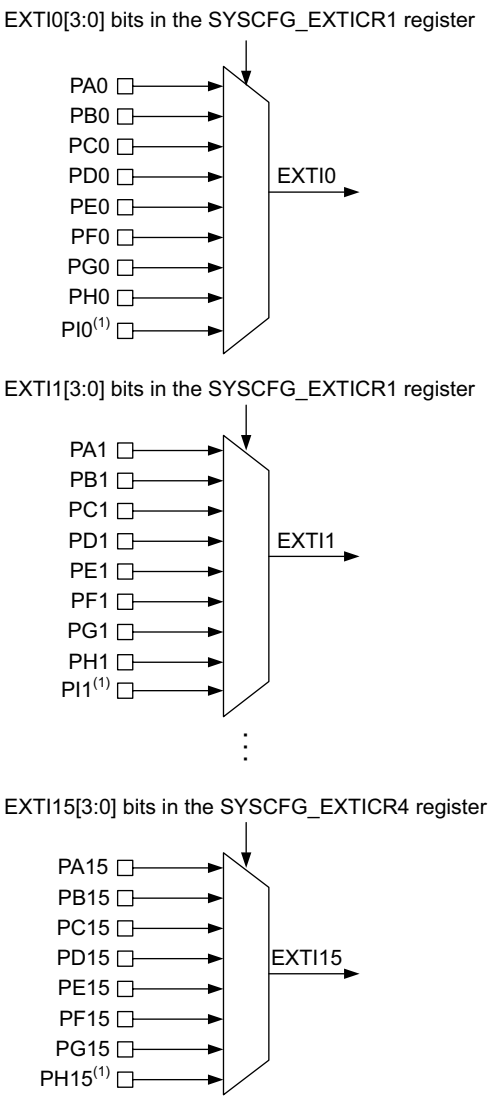

1. Only on STM32L49x/L4Ax devices

The EXTI lines are connected as shown in *Table 59: EXTI lines connections*.

Table 59. EXTI lines connections

EXTI line	Line source(1)	Line type
0-15	GPIO	configurable
16	PVD	configurable
17	OTG FS wakeup event(2)(3) (OTG_FS_WKUP)	direct
18	RTC alarms	configurable

Table 59. EXTI lines connections (continued)

EXTI line	Line source[1]	Line type
19	RTC tamper or timestamp or CSS_LSE	configurable
20	RTC wakeup timer	configurable
21	COMP1 output	configurable
22	COMP2 output	configurable
23	I2C1 wakeup[2]	direct
24	I2C2 wakeup[2]	direct
25	I2C3 wakeup	direct
26	USART1 wakeup[2]	direct
27	USART2 wakeup[2]	direct
28	USART3 wakeup[2]	direct
29	UART4 wakeup[2]	direct
30	UART5 wakeup[2]	direct
31	LPUART1 wakeup	direct
32	LPTIM1	direct
33	LPTIM2[2]	direct
34	SWPMI1 wakeup[2]	direct
35	PVM1 wakeup	configurable
36	PVM2 wakeup	configurable
37	PVM3 wakeup	configurable
38	PVM4 wakeup	configurable
39	LCD wakeup[4]	direct
40[5]	I2C4 wakeup	direct

1. All the lines can wake up from the Stop 0 and Stop 1 modes. All the lines, except the ones mentioned above, can wake up from the Stop 2 mode.
2. This line source cannot wake up from the Stop 2 mode.
3. Available only on STM32L4x5/L4x6 devices.
4. Available only on STM32L4x6 devices.
5. Only for STM32L49x/L4Ax devices

14.5 EXTI registers

Refer to *Section 1.2 on page 69* for a list of abbreviations used in register descriptions.

The peripheral registers have to be accessed by words (32-bit).

14.5.1 Interrupt mask register 1 (EXTI_IMR1)

Address offset: 0x00

Reset value: 0xFF82 0000

31	30	29	28	27	26	25	24	23	22	21	20	19	18	17	16
IM31	IM30	IM29	IM28	IM27	IM26	IM25	IM24	IM23	IM22	IM21	IM20	IM19	IM18	IM17	IM16
rw	rw	rw	rw	rw	rw	rw	rw	rw	rw	rw	rw	rw	rw	rw	rw
15	14	13	12	11	10	9	8	7	6	5	4	3	2	1	0
IM15	IM14	IM13	IM12	IM11	IM10	IM9	IM8	IM7	IM6	IM5	IM4	IM3	IM2	IM1	IM0
rw	rw	rw	rw	rw	rw	rw	rw	rw	rw	rw	rw	rw	rw	rw	rw

Bits 31:0 **IMx:** Interrupt Mask on line x (x = 31 to 0)
0: Interrupt request from Line x is masked
1: Interrupt request from Line x is not masked

Note: The reset value for the direct lines (line 17, lines from 23 to 34, line 39) is set to '1' in order to enable the interrupt by default.

14.5.2 Event mask register 1 (EXTI_EMR1)

Address offset: 0x04

Reset value: 0x0000 0000

31	30	29	28	27	26	25	24	23	22	21	20	19	18	17	16
EM31	EM30	EM29	EM28	EM27	EM26	EM25	EM24	EM23	EM22	EM21	EM20	EM19	EM18	EM17	EM16
rw	rw	rw	rw	rw	rw	rw	rw	rw	rw	rw	rw	rw	rw	rw	rw
15	14	13	12	11	10	9	8	7	6	5	4	3	2	1	0
EM15	EM14	EM13	EM12	EM11	EM10	EM9	EM8	EM7	EM6	EM5	EM4	EM3	EM2	EM1	EM0
rw	rw	rw	rw	rw	rw	rw	rw	rw	rw	rw	rw	rw	rw	rw	rw

Bits 31:0 **EMx:** Event mask on line x (x = 31 to 0)
0: Event request from line x is masked
1: Event request from line x is not masked

14.5.3 Rising trigger selection register 1 (EXTI_RTSR1)

Address offset: 0x08

Reset value: 0x0000 0000

31	30	29	28	27	26	25	24	23	22	21	20	19	18	17	16
Res.	Res.	Res.	Res.	Res.	Res.	Res.	Res.	Res.	RT22	RT21	RT20	RT19	RT18	Res.	RT16
									rw	rw	rw	rw	rw		rw
15	14	13	12	11	10	9	8	7	6	5	4	3	2	1	0
RT15	RT14	RT13	RT12	RT11	RT10	RT9	RT8	RT7	RT6	RT5	RT4	RT3	RT2	RT1	RT0
rw	rw	rw	rw	rw	rw	rw	rw	rw	rw	rw	rw	rw	rw	rw	rw

Bits 31:23 Reserved, must be kept at reset value.

Bits 22:18 **RTx:** Rising trigger event configuration bit of line x (x = 22 to 18)
0: Rising trigger disabled (for Event and Interrupt) for input line
1: Rising trigger enabled (for Event and Interrupt) for input line

Bit 17 Reserved, must be kept at reset value.

Bits 16:0 **RTx:** Rising trigger event configuration bit of line x (x = 16 to 0)
0: Rising trigger disabled (for Event and Interrupt) for input line
1: Rising trigger enabled (for Event and Interrupt) for input line

Note: The configurable wakeup lines are edge-triggered. No glitch must be generated on these lines. If a rising edge on a configurable interrupt line occurs during a write operation in the EXTI_RTSR register, the pending bit is not set.

Rising and falling edge triggers can be set for the same interrupt line. In this case, both generate a trigger condition.

14.5.4 Falling trigger selection register 1 (EXTI_FTSR1)

Address offset: 0x0C

Reset value: 0x0000 0000

31	30	29	28	27	26	25	24	23	22	21	20	19	18	17	16
Res.	Res.	Res.	Res.	Res.	Res.	Res.	Res.	Res.	FT22	FT21	FT20	FT19	FT18	Res.	FT16
									rw	rw	rw	rw	rw		rw
15	14	13	12	11	10	9	8	7	6	5	4	3	2	1	0
FT15	FT14	FT13	FT12	FT11	FT10	FT9	FT8	FT7	FT6	FT5	FT4	FT3	FT2	FT1	FT0
rw	rw	rw	rw	rw	rw	rw	rw	rw	rw	rw	rw	rw	rw	rw	rw

Bits 31:23 Reserved, must be kept at reset value.

Bits 22:18 **FTx:** Falling trigger event configuration bit of line x (x = 22 to 18)
0: Falling trigger disabled (for Event and Interrupt) for input line
1: Falling trigger enabled (for Event and Interrupt) for input line

Bit 17 Reserved, must be kept at reset value.

Bits 16:0 **FTx:** Falling trigger event configuration bit of line x (x = 16 to 0)
0: Falling trigger disabled (for Event and Interrupt) for input line
1: Falling trigger enabled (for Event and Interrupt) for input line

Note: The configurable wakeup lines are edge-triggered. No glitch must be generated on these lines. If a falling edge on a configurable interrupt line occurs during a write operation to the EXTI_FTSR register, the pending bit is not set.

Rising and falling edge triggers can be set for the same interrupt line. In this case, both generate a trigger condition.

14.5.5 Software interrupt event register 1 (EXTI_SWIER1)

Address offset: 0x10

Reset value: 0x0000 0000

31	30	29	28	27	26	25	24	23	22	21	20	19	18	17	16
Res.	Res.	Res.	Res.	Res.	Res.	Res.	Res.	Res.	SWI 22	SWI 21	SWI 20	SWI 19	SWI 18	Res.	SWI 16
									rw	rw	rw	rw	rw		rw

15	14	13	12	11	10	9	8	7	6	5	4	3	2	1	0
SWI 15	SWI 14	SWI 13	SWI 12	SWI 11	SWI 10	SWI 9	SWI 8	SWI 7	SWI 6	SWI 5	SWI 4	SWI 3	SWI 2	SWI 1	SWI 0
rw	rw	rw	rw	rw	rw	rw	rw	rw	rw	rw	rw	rw	rw	rw	rw

Bits 31:23 Reserved, must be kept at reset value.

Bits 22: 18 **SWIx:** Software interrupt on line x (x = 22 o 18)

If the interrupt is enabled on this line in the EXTI_IMR, writing a '1' to this bit when it is at '0' sets the corresponding pending bit in EXTI_PR resulting in an interrupt request generation.

This bit is cleared by clearing the corresponding bit in the EXTI_PR register (by writing a ‘1’ into the bit).

Bit 17 Reserved, must be kept at reset value.

Bits 16:0 **SWIx:** Software interrupt on line x (x = 16 to 0)

If the interrupt is enabled on this line in the EXTI_IMR, writing a '1' to this bit when it is at '0' sets the corresponding pending bit in EXTI_PR resulting in an interrupt request generation.

This bit is cleared by clearing the corresponding bit of EXTI_PR (by writing a ‘1’ into the bit).

14.5.6 Pending register 1 (EXTI_PR1)

Address offset: 0x14

Reset value: undefined

31	30	29	28	27	26	25	24	23	22	21	20	19	18	17	16
Res.	Res.	Res.	Res.	Res.	Res.	Res.	Res.	Res.	PIF22	PIF21	PIF20	PIF19	PIF18	Res.	PIF16
									rc_w1	rc_w1	rc_w1	rc_w1	rc_w1		rc_w1

15	14	13	12	11	10	9	8	7	6	5	4	3	2	1	0
PIF15	PIF14	PIF13	PIF12	PIF11	PIF10	PIF9	PIF8	PIF7	PIF6	PIF5	PIF4	PIF3	PIF2	PIF1	PIF0
rc_w1	rc_w1	rc_w1	rc_w1	rc_w1	rc_w1	rc_w1	rc_w1	rc_w1	rc_w1	rc_w1	rc_w1	rc_w1	rc_w1	rc_w1	rc_w1

Bits 31:23 Reserved, must be kept at reset value.

Bits 22:18 **PIFx:** Pending interrupt flag on line x (x = 22 to 18)
0: No trigger request occurred
1: Selected trigger request occurred
This bit is set when the selected edge event arrives on the interrupt line. This bit is cleared by writing a ‘1’ to the bit.

Bit 17 Reserved, must be kept at reset value.

Bits 16:0 **PIFx:** Pending interrupt flag on line x (x = 16 to 0)
0: No trigger request occurred
1: Selected trigger request occurred
This bit is set when the selected edge event arrives on the interrupt line. This bit is cleared by writing a ‘1’ to the bit.

14.5.7 Interrupt mask register 2 (EXTI_IMR2)

Address offset: 0x20

Reset value:
0x0000 0087 for STM32L47x/L48x devices
0x0000 0187 for STM32L49x/L4Ax devices

31	30	29	28	27	26	25	24	23	22	21	20	19	18	17	16
Res.	Res.	Res.	Res.	Res.	Res.	Res.	Res.	Res.	Res.	Res.	Res.	Res.	Res.	Res.	Res.

15	14	13	12	11	10	9	8	7	6	5	4	3	2	1	0
Res.	Res.	Res.	Res.	Res.	Res.	Res.	IM40	IM39	IM38	IM37	IM36	IM35	IM34	IM33	IM32
							rw	rw	rw	rw	rw	rw	rw	rw	rw

Bits 31:8 Reserved, must be kept at reset value

Bits 8:0 **IMx:** Interrupt mask on line x (x = 40 to 32)
0: Interrupt request from line x is masked
1: Interrupt request from line x is not masked

Note: The reset value for the direct lines (line 17, lines from 23 to 34, line 40) is set to ‘1’ in order to enable the interrupt by default.

Note: IM40 only applicable for STM32L49x/L4Ax devices

14.5.8 Event mask register 2 (EXTI_EMR2)

Address offset: 0x24

Reset value: 0x0000 0000

31	30	29	28	27	26	25	24	23	22	21	20	19	18	17	16
Res.	Res.	Res.	Res.	Res.	Res.	Res.	Res.	Res.	Res.	Res.	Res.	Res.	Res.	Res.	Res.

15	14	13	12	11	10	9	8	7	6	5	4	3	2	1	0
Res.	Res.	Res.	Res.	Res.	Res.	Res.	EM40	EM39	EM38	EM37	EM36	EM35	EM34	EM33	EM32
							rw	rw	rw	rw	rw	rw	rw	rw	rw

Bits 31:8 Reserved, must be kept at reset value

Bits 8:0 **EMx:** Event mask on line x (x = 40 to 32)

0: Event request from line x is masked
1: Event request from line x is not masked

Note: EM40 only applicable for STM32L49x/L4Ax devices

14.5.9 Rising trigger selection register 2 (EXTI_RTSR2)

Address offset: 0x28

Reset value: 0x0000 0000

31	30	29	28	27	26	25	24	23	22	21	20	19	18	17	16
Res.	Res.	Res.	Res.	Res.	Res.	Res.	Res.	Res.	Res.	Res.	Res.	Res.	Res.	Res.	Res.

15	14	13	12	11	10	9	8	7	6	5	4	3	2	1	0
Res.	Res.	Res.	Res.	Res.	Res.	Res.	Res.	Res.	RT38	RT37	RT36	RT35	Res.	Res.	Res.
									rw	rw	rw	rw			

Bits 31:8 Reserved, must be kept at reset value.

Bits 7:3 **RTx:** Rising trigger event configuration bit of line x (x = 35 to 38)

0: Rising trigger disabled (for Event and Interrupt) for input line
1: Rising trigger enabled (for Event and Interrupt) for input line

Bits 2:0 Reserved, must be kept at reset value.

Note: The configurable wakeup lines are edge-triggered. No glitch must be generated on these lines. If a rising edge on a configurable interrupt line occurs during a write operation to the EXTI_RTSR register, the pending bit is not set.

Rising and falling edge triggers can be set for the same interrupt line. In this case, both generate a trigger condition.

14.5.10 Falling trigger selection register 2 (EXTI_FTSR2)

Address offset: 0x2C

Reset value: 0x0000 0000

31	30	29	28	27	26	25	24	23	22	21	20	19	18	17	16
Res.	Res.	Res.	Res.	Res.	Res.	Res.	Res.	Res.	Res.	Res.	Res.	Res.	Res.	Res.	Res.

15	14	13	12	11	10	9	8	7	6	5	4	3	2	1	0
Res.	Res.	Res.	Res.	Res.	Res.	Res.	Res.	Res.	FT38	FT37	FT36	FT35	Res.	Res.	Res.
									rw	rw	rw	rw			

Bits 31:8 Reserved, must be kept at reset value.

Bits 7:3 **FTx:** Falling trigger event configuration bit of line x (x = 35 to 38)

0: Falling trigger disabled (for Event and Interrupt) for input line
1: Falling trigger enabled (for Event and Interrupt) for input line

Bits 2:0 Reserved, must be kept at reset value.

Note: The configurable wakeup lines are edge-triggered. No glitch must be generated on these lines. If a falling edge on a configurable interrupt line occurs during a write operation to the EXTI_FTSR register, the pending bit is not set.

Rising and falling edge triggers can be set for the same interrupt line. In this case, both generate a trigger condition.

14.5.11 Software interrupt event register 2 (EXTI_SWIER2)

Address offset: 0x30

Reset value: 0x0000 0000

31	30	29	28	27	26	25	24	23	22	21	20	19	18	17	16
Res.	Res.	Res.	Res.	Res.	Res.	Res.	Res.	Res.	Res.	Res.	Res.	Res.	Res.	Res.	Res.

15	14	13	12	11	10	9	8	7	6	5	4	3	2	1	0
Res.	Res.	Res.	Res.	Res.	Res.	Res.	Res.	Res.	SWI 38	SWI 37	SWI 36	SWI 35	Res.	Res.	Res.
									rw	rw	rw	rw			

Bits 31:8 Reserved, must be kept at reset value.

Bit 7 **SWIx:** Software interrupt on line x (x = 35 to 38)

If the interrupt is enabled on this line in EXTI_IMR, writing a '1' to this bit when it is at '0' sets the corresponding pending bit of EXTI_PR resulting in an interrupt request generation.
This bit is cleared by clearing the corresponding bit of EXTI_PR (by writing a ‘1’ to the bit).

Bits 2:0 Reserved, must be kept at reset value.

14.5.12 Pending register 2 (EXTI_PR2)

Address offset: 0x34

Reset value: undefined

31	30	29	28	27	26	25	24	23	22	21	20	19	18	17	16
Res.	Res.	Res.	Res.	Res.	Res.	Res.	Res.	Res.	Res.	Res.	Res.	Res.	Res.	Res.	Res.

15	14	13	12	11	10	9	8	7	6	5	4	3	2	1	0
Res.	Res.	Res.	Res.	Res.	Res.	Res.	Res.	Res.	PIF38	PIF37	PIF36	PIF35	Res.	Res.	Res.
									rc_w1	rc_w1	rc_w1	rc_w1			

Bits 31:8 Reserved, must be kept at reset value.

Bit 7 **PIFx:** Pending interrupt flag on line x (x = 35 to 38)

0: No trigger request occurred
1: Selected trigger request occurred
This bit is set when the selected edge event arrives on the interrupt line. This bit is cleared by writing a ‘1’ into the bit.

Bits 2:0 Reserved, must be kept at reset value.

14.5.13 EXTI register map

Table 60 gives the EXTI register map and the reset values.

Table 60. Extended interrupt/event controller register map and reset values

Offset	Register	31	30	29	28	27	26	25	24	23	22	21	20	19	18	17	16	15	14	13	12	11	10	9	8	7	6	5	4	3	2	1	0
0x00	EXTI_IMR1	IM31	IM30	IM29	IM28	IM27	IM26	IM25	IM24	IM23	IM22	IM21	IM20	IM19	IM18	IM17	IM16	IM15	IM14	IM13	IM12	IM11	IM10	IM9	IM8	IM7	IM6	IM5	IM4	IM3	IM2	IM1	IM0
	Reset value	1	1	1	1	1	1	1	1	1	0	0	0	0	0	1	0	0	0	0	0	0	0	0	0	0	0	0	0	0	0	0	0
0x04	EXTI_EMR1	EM31	EM30	EM29	EM28	EM27	EM26	EM25	EM24	EM23	EM22	EM21	EM20	EM19	EM18	EM17	EM16	EM15	EM14	EM13	EM12	EM11	EM10	EM9	EM8	EM7	EM6	EM5	EM4	EM3	EM2	EM1	EM0
	Reset value	0	0	0	0	0	0	0	0	0	0	0	0	0	0	0	0	0	0	0	0	0	0	0	0	0	0	0	0	0	0	0	0
0x08	EXTI_RTSR1	Res.	Res.	Res.	Res.	Res.	Res.	Res.	Res.	Res.	RT22	RT21	RT20	RT19	RT18	Res.	RT16	RT15	RT14	RT13	RT12	RT11	RT10	RT9	RT8	RT7	RT6	RT5	RT4	RT3	RT2	RT1	RT0
	Reset value										0	0	0	0	0		0	0	0	0	0	0	0	0	0	0	0	0	0	0	0	0	0
0x0C	EXTI_FTSR1	Res.	Res.	Res.	Res.	Res.	Res.	Res.	Res.	Res.	FT22	FT21	FT20	FT19	FT18	Res.	FT16	FT15	FT14	FT13	FT12	FT11	FT10	FT9	FT8	FT7	FT6	FT5	FT4	FT3	FT2	FT1	FT0
	Reset value										0	0	0	0	0		0	0	0	0	0	0	0	0	0	0	0	0	0	0	0	0	0
0x10	EXTI_SWIER1	Res.	Res.	Res.	Res.	Res.	Res.	Res.	Res.	Res.	SWI22	SWI21	SWI20	SWI19	SWI18	Res.	SWI16	SWI15	SWI14	SWI13	SWI12	SWI11	SWI10	SWI9	SWI8	SWI7	SWI6	SWI5	SWI4	SWI3	SWI2	SWI1	SWI0
	Reset value										0	0	0	0	0		0	0	0	0	0	0	0	0	0	0	0	0	0	0	0	0	0
0x14	EXTI_PR1	Res.	Res.	Res.	Res.	Res.	Res.	Res.	Res.	Res.	PIF22	PIF21	PIF20	PIF19	PIF18	Res.	PIF16	PIF15	PIF14	PIF13	PIF12	PIF11	PIF10	PIF9	PIF8	PIF7	PIF6	PIF5	PIF4	PIF3	PIF2	PIF1	PIF0
	Reset value										0	0	0	0	0		0	0	0	0	0	0	0	0	0	0	0	0	0	0	0	0	0
0x20	EXTI_IMR2	Res.	Res.	Res.	Res.	Res.	Res.	Res.	Res.	Res.	Res.	Res.	Res.	Res.	Res.	Res.	Res.	Res.	Res.	Res.	Res.	Res.	Res.	Res.	IM40	IM39	IM38	IM37	IM36	IM35	IM34	IM33	IM32
	Reset value																								1	1	0	0	0	0	1	1	1
0x24	EXTI_EMR2	Res.	Res.	Res.	Res.	Res.	Res.	Res.	Res.	Res.	Res.	Res.	Res.	Res.	Res.	Res.	Res.	Res.	Res.	Res.	Res.	Res.	Res.	Res.	EM40	EM39	EM38	EM37	EM36	EM35	EM34	EM33	EM32
	Reset value																								0	0	0	0	0	0	0	0	0
0x28	EXTI_RTSR2	Res.	Res.	Res.	Res.	Res.	Res.	Res.	Res.	Res.	Res.	Res.	Res.	Res.	Res.	Res.	Res.	Res.	Res.	Res.	Res.	Res.	Res.	Res.	Res.	Res.	RT38	RT37	RT36	RT35	Res.	Res.	Res.
	Reset value																										0	0	0	0			
0x2C	EXTI_FTSR2	Res.	Res.	Res.	Res.	Res.	Res.	Res.	Res.	Res.	Res.	Res.	Res.	Res.	Res.	Res.	Res.	Res.	Res.	Res.	Res.	Res.	Res.	Res.	Res.	Res.	FT38	FT37	FT36	FT35	Res.	Res.	Res.
	Reset value																										0	0	0	0			
0x30	EXTI_SWIER2	Res.	Res.	Res.	Res.	Res.	Res.	Res.	Res.	Res.	Res.	Res.	Res.	Res.	Res.	Res.	Res.	Res.	Res.	Res.	Res.	Res.	Res.	Res.	Res.	Res.	SWI38	SWI37	SWI36	SWI35	Res.	Res.	Res.
	Reset value																										0	0	0	0			
0x34	EXTI_PR2	Res.	Res.	Res.	Res.	Res.	Res.	Res.	Res.	Res.	Res.	Res.	Res.	Res.	Res.	Res.	Res.	Res.	Res.	Res.	Res.	Res.	Res.	Res.	Res.	Res.	PIF38	PIF37	PIF36	PIF35	Res.	Res.	Res.
	Reset value																										0	0	0	0			

Refer to *Section 2.2 on page 75* for the register boundary addresses.

15 Cyclic redundancy check calculation unit (CRC)

15.1 Introduction

The CRC (cyclic redundancy check) calculation unit is used to get a CRC code from 8-, 16- or 32-bit data word and a generator polynomial.

Among other applications, CRC-based techniques are used to verify data transmission or storage integrity. In the scope of the functional safety standards, they offer a means of verifying the Flash memory integrity. The CRC calculation unit helps compute a signature of the software during runtime, to be compared with a reference signature generated at link time and stored at a given memory location.

15.2 CRC main features

- Uses CRC-32 (Ethernet) polynomial: 0x4C11DB7
  $X^{32} + X^{26} + X^{23} + X^{22} + X^{16} + X^{12} + X^{11} + X^{10} + X^{8} + X^{7} + X^{5} + X^{4} + X^{2} + X + 1$
- Alternatively, uses fully programmable polynomial with programmable size (7, 8, 16, 32 bits)
- Handles 8-,16-, 32-bit data size
- Programmable CRC initial value
- Single input/output 32-bit data register
- Input buffer to avoid bus stall during calculation
- CRC computation done in 4 AHB clock cycles (HCLK) for the 32-bit data size
- General-purpose 8-bit register (can be used for temporary storage)
- Reversibility option on I/O data

15.3 CRC functional description

15.3.1 CRC block diagram

Figure 35. CRC calculation unit block diagram

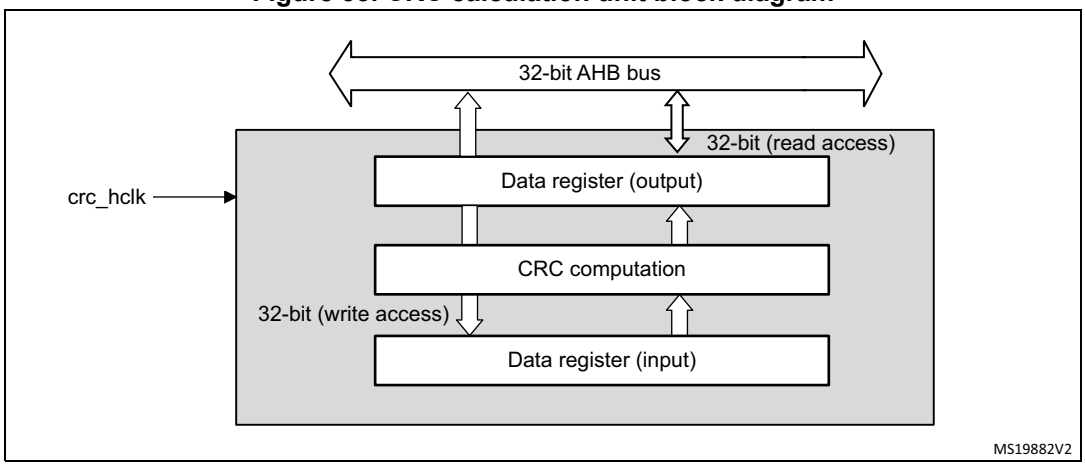

15.3.2 CRC internal signals

Table 61. CRC internal input/output signals

Signal name	Signal type	Description
crc_hclk	Digital input	AHB clock

15.3.3 CRC operation

The CRC calculation unit has a single 32-bit read/write data register (CRC_DR). It is used to input new data (write access), and holds the result of the previous CRC calculation (read access).

Each write operation to the data register creates a combination of the previous CRC value (stored in CRC_DR) and the new one. CRC computation is done on the whole 32-bit data word or byte by byte depending on the format of the data being written.

The CRC_DR register can be accessed by word, right-aligned half-word and right-aligned byte. For the other registers only 32-bit access is allowed.

The duration of the computation depends on data width:

- 4 AHB clock cycles for 32-bit
- 2 AHB clock cycles for 16-bit
- 1 AHB clock cycles for 8-bit

An input buffer allows a second data to be immediately written without waiting for any wait states due to the previous CRC calculation.

The data size can be dynamically adjusted to minimize the number of write accesses for a given number of bytes. For instance, a CRC for 5 bytes can be computed with a word write followed by a byte write.

The input data can be reversed, to manage the various endianness schemes. The reversing operation can be performed on 8 bits, 16 bits and 32 bits depending on the REV_IN[1:0] bits in the CRC_CR register.

For example: input data 0x1A2B3C4D is used for CRC calculation as:

- 0x58D43CB2 with bit-reversal done by byte
- 0xD458B23C with bit-reversal done by half-word
- 0xB23CD458 with bit-reversal done on the full word

The output data can also be reversed by setting the REV_OUT bit in the CRC_CR register.

The operation is done at bit level: for example, output data 0x11223344 is converted into 0x22CC4488.

The CRC calculator can be initialized to a programmable value using the RESET control bit in the CRC_CR register (the default value is 0xFFFFFFFF).

The initial CRC value can be programmed with the CRC_INIT register. The CRC_DR register is automatically initialized upon CRC_INIT register write access.

The CRC_IDR register can be used to hold a temporary value related to CRC calculation. It is not affected by the RESET bit in the CRC_CR register.

Polynomial programmability

The polynomial coefficients are fully programmable through the CRC_POL register, and the polynomial size can be configured to be 7, 8, 16 or 32 bits by programming the POLYSIZE[1:0] bits in the CRC_CR register. Even polynomials are not supported.

If the CRC data is less than 32-bit, its value can be read from the least significant bits of the CRC_DR register.

To obtain a reliable CRC calculation, the change on-fly of the polynomial value or size can not be performed during a CRC calculation. As a result, if a CRC calculation is ongoing, the application must either reset it or perform a CRC_DR read before changing the polynomial.

The default polynomial value is the CRC-32 (Ethernet) polynomial: 0x4C11DB7.

15.4 CRC registers

15.4.1 CRC data register (CRC_DR)

Address offset: 0x00

Reset value: 0xFFFF FFFF

31	30	29	28	27	26	25	24	23	22	21	20	19	18	17	16
DR[31:16]															
rw	rw	rw	rw	rw	rw	rw	rw	rw	rw	rw	rw	rw	rw	rw	rw
15	14	13	12	11	10	9	8	7	6	5	4	3	2	1	0
DR[15:0]															
rw	rw	rw	rw	rw	rw	rw	rw	rw	rw	rw	rw	rw	rw	rw	rw

Bits 31:0 **DR[31:0]:** Data register bits

This register is used to write new data to the CRC calculator.

It holds the previous CRC calculation result when it is read.

If the data size is less than 32 bits, the least significant bits are used to write/read the correct value.

15.4.2 CRC independent data register (CRC_IDR)

Address offset: 0x04

Reset value: 0x0000 0000

31	30	29	28	27	26	25	24	23	22	21	20	19	18	17	16
Res.	Res.	Res.	Res.	Res.	Res.	Res.	Res.	Res.	Res.	Res.	Res.	Res.	Res.	Res.	Res.
15	14	13	12	11	10	9	8	7	6	5	4	3	2	1	0
Res.	Res.	Res.	Res.	Res.	Res.	Res.	Res.	IDR[7:0]							
								rw							

Bits 31:8 Reserved, must be kept at reset value.

Bits 7:0 **IDR[7:0]**: General-purpose 8-bit data register bits

These bits can be used as a temporary storage location for one byte.

This register is not affected by CRC resets generated by the RESET bit in the CRC_CR register

15.4.3 CRC control register (CRC_CR)

Address offset: 0x08

Reset value: 0x0000 0000

31	30	29	28	27	26	25	24	23	22	21	20	19	18	17	16
Res.	Res.	Res.	Res.	Res.	Res.	Res.	Res.	Res.	Res.	Res.	Res.	Res.	Res.	Res.	Res.
15	14	13	12	11	10	9	8	7	6	5	4	3	2	1	0
Res.	Res.	Res.	Res.	Res.	Res.	Res.	Res.	REV_OUT	REV_IN[1:0]		POLYSIZE[1:0]		Res.	Res.	RESET
								rw	rw	rw	rw	rw			rs

Bits 31:8 Reserved, must be kept at reset value.

Bit 7 **REV_OUT**: Reverse output data
This bit controls the reversal of the bit order of the output data.
0: Bit order not affected
1: Bit-reversed output format

Bits 6:5 **REV_IN[1:0]**: Reverse input data
These bits control the reversal of the bit order of the input data
00: Bit order not affected
01: Bit reversal done by byte
10: Bit reversal done by half-word
11: Bit reversal done by word

Bits 4:3 **POLYSIZE[1:0]**: Polynomial size
These bits control the size of the polynomial.
00: 32 bit polynomial
01: 16 bit polynomial
10: 8 bit polynomial
11: 7 bit polynomial

Bits 2:1 Reserved, must be kept at reset value.

Bit 0 **RESET**: RESET bit
This bit is set by software to reset the CRC calculation unit and set the data register to the value stored in the CRC_INIT register. This bit can only be set, it is automatically cleared by hardware

15.4.4 CRC initial value (CRC_INIT)

Address offset: 0x10

Reset value: 0xFFFF FFFF

31	30	29	28	27	26	25	24	23	22	21	20	19	18	17	16
CRC_INIT[31:16]															
rw	rw	rw	rw	rw	rw	rw	rw	rw	rw	rw	rw	rw	rw	rw	rw
15	14	13	12	11	10	9	8	7	6	5	4	3	2	1	0
CRC_INIT[15:0]															
rw	rw	rw	rw	rw	rw	rw	rw	rw	rw	rw	rw	rw	rw	rw	rw

Bits 31:0 **CRC_INIT[31:0]**: *Programmable initial CRC value*

This register is used to write the CRC initial value.

15.4.5 CRC polynomial (CRC_POL)

Address offset: 0x14

Reset value: 0x04C1 1DB7

31	30	29	28	27	26	25	24	23	22	21	20	19	18	17	16
POL[31:16]															
rw	rw	rw	rw	rw	rw	rw	rw	rw	rw	rw	rw	rw	rw	rw	rw
15	14	13	12	11	10	9	8	7	6	5	4	3	2	1	0
POL[15:0]															
rw	rw	rw	rw	rw	rw	rw	rw	rw	rw	rw	rw	rw	rw	rw	rw

Bits 31:0 **POL[31:0]**: Programmable polynomial

This register is used to write the coefficients of the polynomial to be used for CRC calculation.

If the polynomial size is less than 32 bits, the least significant bits have to be used to program the correct value.

15.4.6 CRC register map

Table 62. CRC register map and reset values

Offset	Register name	31	30	29	28	27	26	25	24	23	22	21	20	19	18	17	16	15	14	13	12	11	10	9	8	7	6	5	4	3	2	1	0
0x00	CRC_DR	DR[31:0]																															
	Reset value	1	1	1	1	1	1	1	1	1	1	1	1	1	1	1	1	1	1	1	1	1	1	1	1	1	1	1	1	1	1	1	1
0x04	CRC_IDR	Res.	Res.	Res.	Res.	Res.	Res.	Res.	Res.	Res.	Res.	Res.	Res.	Res.	Res.	Res.	Res.	Res.	Res.	Res.	Res.	Res.	Res.	Res.	Res.	IDR[7:0]							
	Reset value																									0	0	0	0	0	0	0	0
0x08	CRC_CR	Res.	Res.	Res.	Res.	Res.	Res.	Res.	Res.	Res.	Res.	Res.	Res.	Res.	Res.	Res.	Res.	Res.	Res.	Res.	Res.	Res.	Res.	Res.	Res.	REV_OUT	REV_IN[1:0]		POLYSIZE[1:0]		Res.	Res.	RESET
	Reset value																									0	0	0	0	0			0
0x10	CRC_INIT	CRC_INIT[31:0]																															
	Reset value	1	1	1	1	1	1	1	1	1	1	1	1	1	1	1	1	1	1	1	1	1	1	1	1	1	1	1	1	1	1	1	1
0x14	CRC_POL	POL[31:0]																															
	Reset value	0	0	0	0	0	1	0	0	1	1	0	0	0	0	0	1	0	0	0	1	1	1	0	1	1	0	1	1	0	1	1	1

Refer to *Section 2.2 on page 75* for the register boundary addresses.

16 Flexible static memory controller (FSMC)

16.1 Introduction

The flexible static memory controller (FSMC) includes two memory controllers:

- The NOR/PSRAM memory controller
- The NAND memory controller

This memory controller is also named flexible memory controller (FMC).

16.2 FMC main features

The FMC functional block makes the interface with: synchronous and asynchronous static memories, and NAND Flash memory. Its main purposes are:

- to translate AHB transactions into the appropriate external device protocol
- to meet the access time requirements of the external memory devices

All external memories share the addresses, data and control signals with the controller. Each external device is accessed by means of a unique chip select. The FMC performs only one access at a time to an external device.

The main features of the FMC controller are the following:

- Interface with static-memory mapped devices including:
  - Static random access memory (SRAM)
  - NOR Flash memory/OneNAND Flash memory
  - PSRAM (4 memory banks)
  - NAND Flash memory with ECC hardware to check up to 8 Kbytes of data
- Interface with parallel LCD modules, supporting Intel 8080 and Motorola 6800 modes.
- Burst mode support for faster access to synchronous devices such as NOR Flash memory, PSRAM)
- Programmable continuous clock output for asynchronous and synchronous accesses
- 8-,16-bit wide data bus
- Independent chip select control for each memory bank
- Independent configuration for each memory bank
- Write enable and byte lane select outputs for use with PSRAM, SRAM devices
- External asynchronous wait control
- Write FIFO with 16 x32-bit depth

The Write FIFO is common to all memory controllers and consists of:

- a Write Data FIFO which stores the AHB data to be written to the memory (up to 32 bits) plus one bit for the AHB transfer (burst or not sequential mode)
- a Write Address FIFO which stores the AHB address (up to 28 bits) plus the AHB data size (up to 2 bits). When operating in burst mode, only the start address is stored except when crossing a page boundary (for PSRAM). In this case, the AHB burst is broken into two FIFO entries.

The Write FIFO can be disabled by setting the WFDIS bit in the FMC_BCR1 register (only for STM32L49x/L4Ax devices).

At startup the FMC pins must be configured by the user application. The FMC I/O pins which are not used by the application can be used for other purposes.

The FMC registers that define the external device type and associated characteristics are usually set at boot time and do not change until the next reset or power-up. However, the settings can be changed at any time.

16.3 FMC block diagram

The FMC consists of the following main blocks:

- The AHB interface (including the FMC configuration registers)
- The NOR Flash/PSRAM/SRAM controller
- The external device interface
- The NAND Flash controller

The block diagram is shown in the figure below.

Figure 36. FMC block diagram

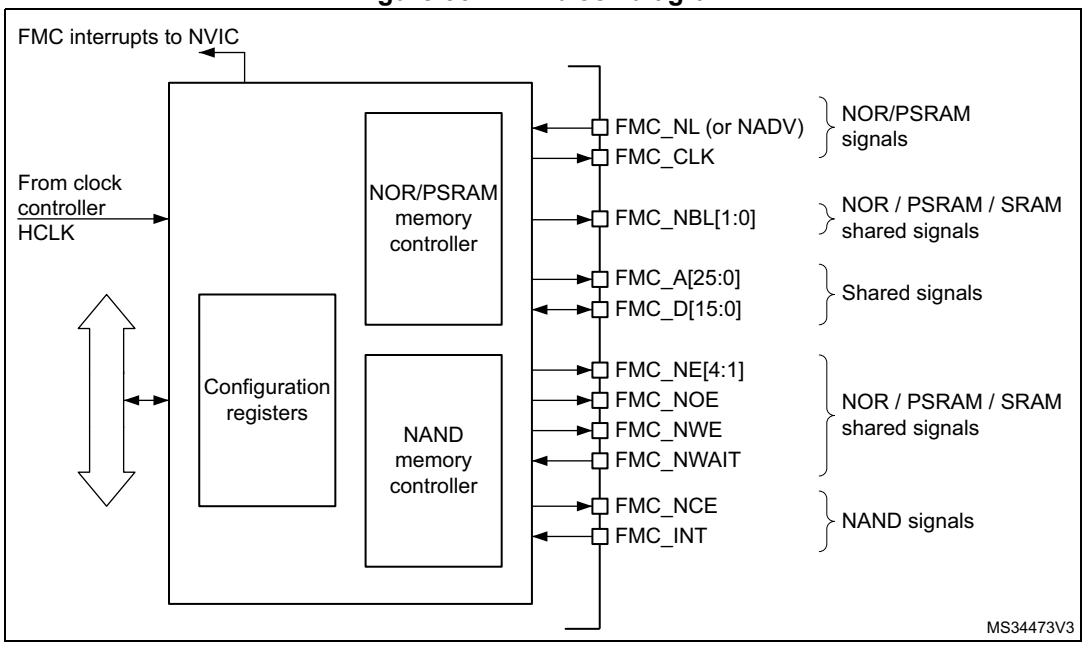

16.4 AHB interface

The AHB slave interface allows internal CPUs and other bus master peripherals to access the external memories.

AHB transactions are translated into the external device protocol. In particular, if the selected external memory is 16- or 8-bit wide, 32-bit wide transactions on the AHB are split into consecutive 16- or 8-bit accesses. The FMC chip select (FMC_NEx) does not toggle between the consecutive accesses except in case of Access mode D when the Extended mode is enabled.

The FMC generates an AHB error in the following conditions:

- When reading or writing to an FMC bank (Bank 1 to 4) which is not enabled.
- When reading or writing to the NOR Flash bank while the FACCEN bit is reset in the FMC_BCRx register.

The effect of an AHB error depends on the AHB master which has attempted the R/W access:

- If the access has been attempted by the Cortex®-M4 CPU, a hard fault interrupt is generated.
- If the access has been performed by a DMA controller, a DMA transfer error is generated and the corresponding DMA channel is automatically disabled.

The AHB clock (HCLK) is the reference clock for the FMC.

16.4.1 Supported memories and transactions

General transaction rules

The requested AHB transaction data size can be 8-, 16- or 32-bit wide whereas the accessed external device has a fixed data width. This may lead to inconsistent transfers.

Therefore, some simple transaction rules must be followed:

- AHB transaction size and memory data size are equal

  There is no issue in this case.
- AHB transaction size is greater than the memory size:

  In this case, the FMC splits the AHB transaction into smaller consecutive memory accesses to meet the external data width. The FMC chip select (FMC_NEx) does not toggle between the consecutive accesses.
- AHB transaction size is smaller than the memory size:

  The transfer may or not be consistent depending on the type of external device:
  - Accesses to devices that have the byte select feature (SRAM, ROM, PSRAM)

    In this case, the FMC allows read/write transactions and accesses the right data through its byte lanes NBL[1:0].

    Bytes to be written are addressed by NBL[1:0].

    All memory bytes are read (NBL[1:0] are driven low during read transaction) and the useless ones are discarded.
  - Accesses to devices that do not have the byte select feature (NOR and NAND Flash memories)

    This situation occurs when a byte access is requested to a 16-bit wide Flash memory. Since the device cannot be accessed in Byte mode (only 16-bit words

can be read/written from/to the Flash memory), Write transactions and Read transactions are allowed (the controller reads the entire 16-bit memory word and uses only the required byte).

Wrap support for NOR Flash/PSRAM

Wrap burst mode for synchronous memories is not supported. The memories must be configured in Linear burst mode of undefined length.

Configuration registers

The FMC can be configured through a set of registers. Refer to *Section 16.6.6*, for a detailed description of the NOR Flash/PSRAM controller registers. Refer to *Section 16.7.7*, for a detailed description of the NAND Flash registers.

16.5 External device address mapping

From the FMC point of view, the external memory is divided into fixed-size banks of 256 Mbytes each (see *Figure 37*):

- Bank 1 used to address up to 4 NOR Flash memory or PSRAM devices. This bank is split into 4 NOR/PSRAM subbanks with 4 dedicated chip selects, as follows:
  - Bank 1 - NOR/PSRAM 1
  - Bank 1 - NOR/PSRAM 2
  - Bank 1 - NOR/PSRAM 3
  - Bank 1 - NOR/PSRAM 4
- Bank 3 used to address NAND Flash memory devices.The MPU memory attribute for this space must be reconfigured by software to Device.

For each bank the type of memory to be used can be configured by the user application through the Configuration register.

Figure 37. FMC memory banks

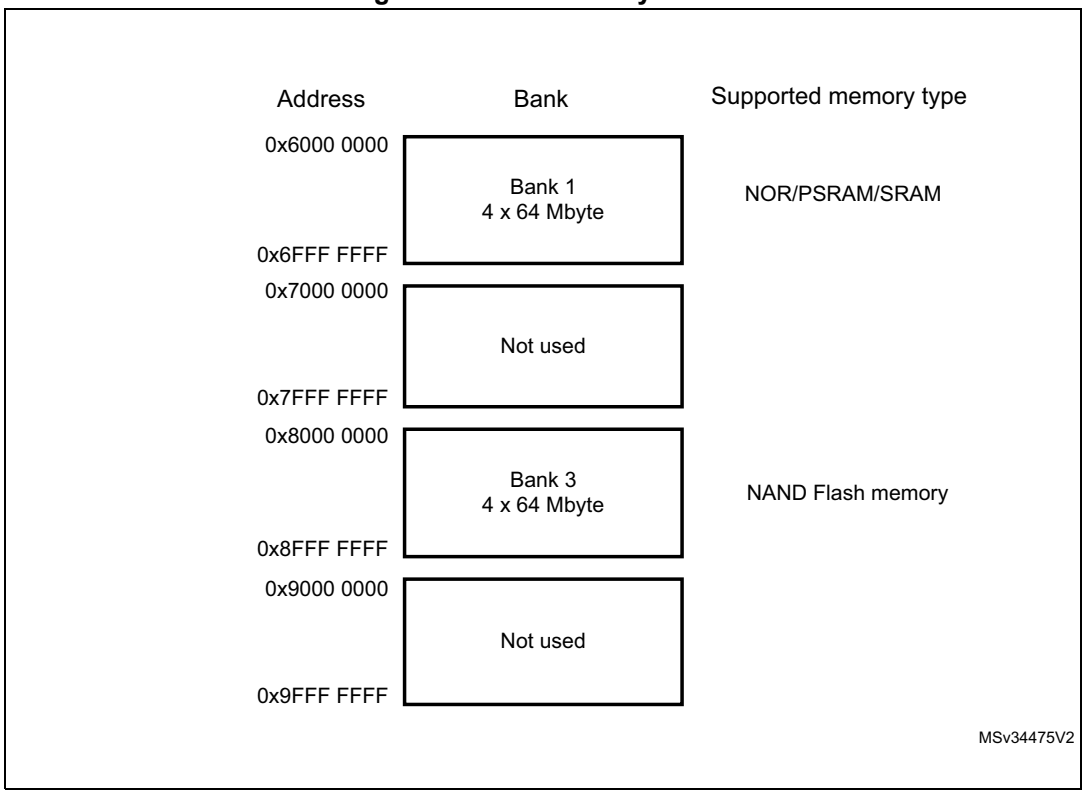

16.5.1 NOR/PSRAM address mapping

HADDR[27:26] bits are used to select one of the four memory banks as shown in *Table 63*.

Table 63. NOR/PSRAM bank selection

HADDR[27:26][1]	Selected bank
00	Bank 1 - NOR/PSRAM 1
01	Bank 1 - NOR/PSRAM 2
10	Bank 1 - NOR/PSRAM 3
11	Bank 1 - NOR/PSRAM 4

1. HADDR are internal AHB address lines that are translated to external memory.

The HADDR[25:0] bits contain the external memory address. Since HADDR is a byte address whereas the memory is addressed at word level, the address actually issued to the memory varies according to the memory data width, as shown in the following table.

Table 64. NOR/PSRAM External memory address

Memory width[1]	Data address issued to the memory	Maximum memory capacity (bits)
8-bit	HADDR[25:0]	64 Mbytes x 8 = 512 Mbit
16-bit	HADDR[25:1] >> 1	64 Mbytes/2 x 16 = 512 Mbit

1. In case of a 16-bit external memory width, the FMC internally uses HADDR[25:1] to generate the address for external memory FMC_A[24:0].
   Whatever the external memory width, FMC_A[0] should be connected to external memory address A[0].

16.5.2 NAND Flash memory address mapping

The NAND bank is divided into memory areas as indicated in *Table 65*.

Table 65. NAND memory mapping and timing registers

Start address	End address	FMC bank	Memory space	Timing register
0x8800 0000	0x8BFF FFFF	Bank 3 - NAND Flash	Attribute	FMC_PATT (0x8C)
0x8000 0000	0x83FF FFFF		Common	FMC_PMEM (0x88)

For NAND Flash memory, the common and attribute memory spaces are subdivided into three sections (see in *Table 66* below) located in the lower 256 Kbytes:

- Data section (first 64 Kbytes in the common/attribute memory space)
- Command section (second 64 Kbytes in the common / attribute memory space)
- Address section (next 128 Kbytes in the common / attribute memory space)

Table 66. NAND bank selection

Section name	HADDR[17:16]	Address range
Address section	1X	0x020000-0x03FFFF
Command section	01	0x010000-0x01FFFF
Data section	00	0x000000-0x0FFFF

The application software uses the 3 sections to access the NAND Flash memory:

- **To sending a command to NAND Flash memory**, the software must write the command value to any memory location in the command section.
- **To specify the NAND Flash address that must be read or written**, the software must write the address value to any memory location in the address section. Since an address can be 4 or 5 bytes long (depending on the actual memory size), several consecutive write operations to the address section are required to specify the full address.
- **To read or write data,** the software reads or writes the data from/to any memory location in the data section.

Since the NAND Flash memory automatically increments addresses, there is no need to increment the address of the data section to access consecutive memory locations.

16.6 NOR Flash/PSRAM controller

The FMC generates the appropriate signal timings to drive the following types of memories:

- Asynchronous SRAM and ROM
  - 8 bits
  - 16 bits
- PSRAM (CellularRAM™)
  - Asynchronous mode
  - Burst mode for synchronous accesses
  - Multiplexed or non-multiplexed
- NOR Flash memory
  - Asynchronous mode
  - Burst mode for synchronous accesses
  - Multiplexed or non-multiplexed

The FMC outputs a unique chip select signal, NE[4:1], per bank. All the other signals (addresses, data and control) are shared.

The FMC supports a wide range of devices through a programmable timings among which:

- Programmable wait states (up to 15)
- Programmable bus turnaround cycles (up to 15)
- Programmable output enable and write enable delays (up to 15)
- Independent read and write timings and protocol to support the widest variety of memories and timings
- Programmable continuous clock (FMC_CLK) output.

The FMC Clock (FMC_CLK) is a submultiple of the HCLK clock. It can be delivered to the selected external device either during synchronous accesses only or during asynchronous and synchronous accesses depending on the CCKEN bit configuration in the FMC_BCR1 register:

- If the CCLKEN bit is reset, the FMC generates the clock (CLK) only during synchronous accesses (Read/write transactions).
- If the CCLKEN bit is set, the FMC generates a continuous clock during asynchronous and synchronous accesses. To generate the FMC_CLK continuous clock, Bank 1 must be configured in Synchronous mode (see *Section 16.6.6: NOR/PSRAM controller registers*). Since the same clock is used for all synchronous memories, when a continuous output clock is generated and synchronous accesses are performed, the AHB data size has to be the same as the memory data width (MWID) otherwise the FMC_CLK frequency is changed depending on AHB data transaction (refer to *Section 16.6.5: Synchronous transactions* for FMC_CLK divider ratio formula).

The size of each bank is fixed and equal to 64 Mbytes. Each bank is configured through dedicated registers (see *Section 16.6.6: NOR/PSRAM controller registers*).

The programmable memory parameters include access times (see *Table 67*) and support for wait management (for PSRAM and NOR Flash accessed in Burst mode).

Table 67. Programmable NOR/PSRAM access parameters

Parameter	Function	Access mode	Unit	Min.	Max.
Address setup	Duration of the address setup phase	Asynchronous	AHB clock cycle (HCLK)	0	15
Address hold	Duration of the address hold phase	Asynchronous, muxed I/Os	AHB clock cycle (HCLK)	1	15
Data setup	Duration of the data setup phase	Asynchronous	AHB clock cycle (HCLK)	1	256
Bust turn	Duration of the bus turnaround phase	Asynchronous and synchronous read / write	AHB clock cycle (HCLK)	0	15
Clock divide ratio	Number of AHB clock cycles (HCLK) to build one memory clock cycle (CLK)	Synchronous	AHB clock cycle (HCLK)	2	16
Data latency	Number of clock cycles to issue to the memory before the first data of the burst	Synchronous	Memory clock cycle (CLK)	2	17

16.6.1 External memory interface signals

Table 68, *Table 69* and *Table 70* list the signals that are typically used to interface with NOR Flash memory, SRAM and PSRAM.

Note: The prefix "N" identifies the signals that are active low.

NOR Flash memory, non-multiplexed I/Os

Table 68. Non-multiplexed I/O NOR Flash memory

FMC signal name	I/O	Function
CLK	O	Clock (for synchronous access)
A[25:0]	O	Address bus
D[15:0]	I/O	Bidirectional data bus
NE[x]	O	Chip select, x = 1..4
NOE	O	Output enable
NWE	O	Write enable
NL(=NADV)	O	Latch enable (this signal is called address valid, NADV, by some NOR Flash devices)
NWAIT	I	NOR Flash wait input signal to the FMC

The maximum capacity is 512 Mbits (26 address lines).

NOR Flash memory, 16-bit multiplexed I/Os

Table 69. 16-bit multiplexed I/O NOR Flash memory

FMC signal name	I/O	Function
CLK	O	Clock (for synchronous access)
A[25:16]	O	Address bus
AD[15:0]	I/O	16-bit multiplexed, bidirectional address/data bus (the 16-bit address A[15:0] and data D[15:0] are multiplexed on the databus)
NE[x]	O	Chip select, x = 1..4
NOE	O	Output enable
NWE	O	Write enable
NL(=NADV)	O	Latch enable (this signal is called address valid, NADV, by some NOR Flash devices)
NWAIT	I	NOR Flash wait input signal to the FMC

The maximum capacity is 512 Mbits.

PSRAM/SRAM, non-multiplexed I/Os

Table 70. Non-multiplexed I/Os PSRAM/SRAM

FMC signal name	I/O	Function
CLK	O	Clock (only for PSRAM synchronous access)
A[25:0]	O	Address bus
D[15:0]	I/O	Data bidirectional bus
NE[x]	O	Chip select, x = 1..4 (called NCE by PSRAM (CellularRAM™ i.e. CRAM))
NOE	O	Output enable
NWE	O	Write enable
NL(= NADV)	O	Address valid only for PSRAM input (memory signal name: NADV)
NWAIT	I	PSRAM wait input signal to the FMC
NBL[1:0]	O	Byte lane output. Byte 0 and Byte 1 control (upper and lower byte enable)

The maximum capacity is 512 Mbits.

PSRAM, 16-bit multiplexed I/Os

Table 71. 16-Bit multiplexed I/O PSRAM

FMC signal name	I/O	Function
CLK	O	Clock (for synchronous access)
A[25:16]	O	Address bus
AD[15:0]	I/O	16-bit multiplexed, bidirectional address/data bus (the 16-bit address A[15:0] and data D[15:0] are multiplexed on the databus)

Table 71. 16-Bit multiplexed I/O PSRAM (continued)

FMC signal name	I/O	Function
NE[x]	O	Chip select, x = 1..4 (called NCE by PSRAM (CellularRAM™ i.e. CRAM))
NOE	O	Output enable
NWE	O	Write enable
NL(= NADV)	O	Address valid PSRAM input (memory signal name: NADV)
NWAIT	I	PSRAM wait input signal to the FMC
NBL[1:0]	O	Byte lane output. Byte 0 and Byte 1 control (upper and lower byte enable)

The maximum capacity is 512 Mbits (26 address lines).

16.6.2 Supported memories and transactions

Table 72 below shows an example of the supported devices, access modes and transactions when the memory data bus is 16-bit wide for NOR Flash memory, PSRAM and SRAM. The transactions not allowed (or not supported) by the FMC are shown in gray in this example.

Table 72. NOR Flash/PSRAM: example of supported memories and transactions

Device	Mode	R/W	AHB data size	Memory data size	Allowed/ not allowed	Comments
NOR Flash (muxed I/Os and nonmuxed I/Os)	Asynchronous	R	8	16	Y	-
	Asynchronous	W	8	16	N	-
	Asynchronous	R	16	16	Y	-
	Asynchronous	W	16	16	Y	-
	Asynchronous	R	32	16	Y	Split into 2 FMC accesses
	Asynchronous	W	32	16	Y	Split into 2 FMC accesses
	Asynchronous page	R	-	16	N	Mode is not supported
	Synchronous	R	8	16	N	-
	Synchronous	R	16	16	Y	-
	Synchronous	R	32	16	Y	-

Table 72. NOR Flash/PSRAM: example of supported memories and transactions (continued)

Device	Mode	R/W	AHB data size	Memory data size	Allowed/ not allowed	Comments
PSRAM (multiplexed I/Os and non-multiplexed I/Os)	Asynchronous	R	8	16	Y	-
	Asynchronous	W	8	16	Y	Use of byte lanes NBL[1:0]
	Asynchronous	R	16	16	Y	-
	Asynchronous	W	16	16	Y	-
	Asynchronous	R	32	16	Y	Split into 2 FMC accesses
	Asynchronous	W	32	16	Y	Split into 2 FMC accesses
	Asynchronous page	R	-	16	N	Mode is not supported
	Synchronous	R	8	16	N	-
	Synchronous	R	16	16	Y	-
	Synchronous	R	32	16	Y	-
	Synchronous	W	8	16	Y	Use of byte lanes NBL[1:0]
	Synchronous	W	16/32	16	Y	-
SRAM and ROM	Asynchronous	R	8 / 16	16	Y	-
	Asynchronous	W	8 / 16	16	Y	Use of byte lanes NBL[1:0]
	Asynchronous	R	32	16	Y	Split into 2 FMC accesses
	Asynchronous	W	32	16	Y	Split into 2 FMC accesses Use of byte lanes NBL[1:0]

16.6.3 General timing rules

Signals synchronization

- All controller output signals change on the rising edge of the internal clock (HCLK)
- In Synchronous mode (read or write), all output signals change on the rising edge of HCLK. Whatever the CLKDIV value, all outputs change as follows:
  - NOEL/NWEL/ NEL/NADVL/ NADVH /NBLL/ Address valid outputs change on the falling edge of FMC_CLK clock.
  - NOEH/ NWEH / NEH/ NOEH/NBLH/ Address invalid outputs change on the rising edge of FMC_CLK clock.

16.6.4 NOR Flash/PSRAM controller asynchronous transactions

Asynchronous static memories (NOR Flash, PSRAM, SRAM)

- Signals are synchronized by the internal clock HCLK. This clock is not issued to the memory
- The FMC always samples the data before de-asserting the NOE signal. This guarantees that the memory data hold timing constraint is met (minimum Chip Enable high to data transition is usually 0 ns)
- If the Extended mode is enabled (EXTMOD bit is set in the FMC_BCRx register), up to four extended modes (A, B, C and D) are available. It is possible to mix A, B, C and D modes for read and write operations. For example, read operation can be performed in mode A and write in mode B.
- If the Extended mode is disabled (EXTMOD bit is reset in the FMC_BCRx register), the FMC can operate in mode 1 or mode 2 as follows:
  - Mode 1 is the default mode when SRAM/PSRAM memory type is selected (MTYP = 0x0 or 0x01 in the FMC_BCRx register)
  - Mode 2 is the default mode when NOR memory type is selected (MTYP = 0x10 in the FMC_BCRx register).

Mode 1 - SRAM/PSRAM (CRAM)

The next figures show the read and write transactions for the supported modes followed by the required configuration of FMC_BCRx, and FMC_BTRx/FMC_BWTRx registers.

Figure 38. Mode 1 read access waveforms

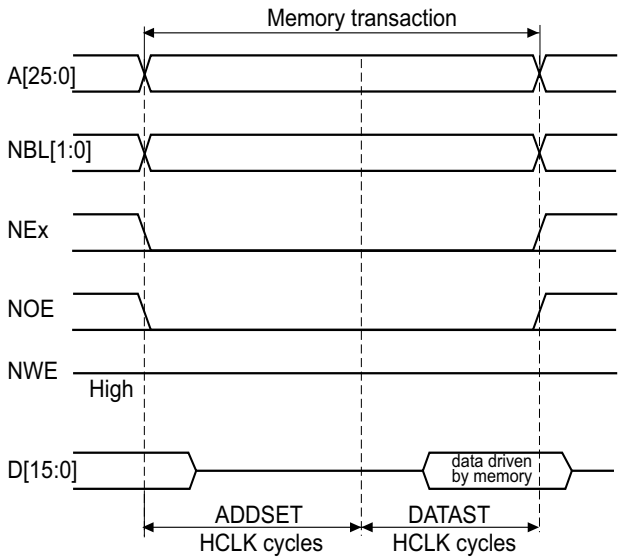

Figure 39. Mode 1 write access waveforms

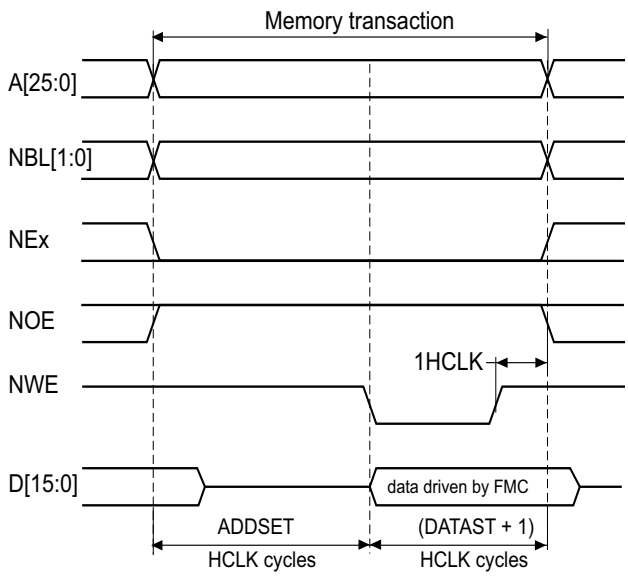

The one HCLK cycle at the end of the write transaction helps guarantee the address and data hold time after the NWE rising edge. Due to the presence of this HCLK cycle, the DATAST value must be greater than zero (DATAST > 0).

Table 73. FMC_BCRx bitfields (mode 1)

Bit number	Bit name	Value to set
31:22	Reserved	0x000
21	WFDIS	As needed (this bit is reserved for STM32L47x/L48x devices)
20	CCLKEN	As needed
19	CBURSTRW	0x0 (no effect in Asynchronous mode)
18:16	CPSIZE	0x0 (no effect in Asynchronous mode)
15	ASYNCWAIT	Set to 1 if the memory supports this feature. Otherwise keep at 0.
14	EXTMOD	0x0
13	WAITEN	0x0 (no effect in Asynchronous mode)
12	WREN	As needed
11	Reserved	0x0
10	Reserved	0x0
9	WAITPOL	Meaningful only if bit 15 is 1
8	BURSTEN	0x0
7	Reserved	0x1
6	FACCEN	Don’t care

Table 73. FMC_BCRx bitfields (mode 1) (continued)

Bit number	Bit name	Value to set
5:4	MWID	As needed
3:2	MTYP	As needed, exclude 0x2 (NOR Flash memory)
1	MUXE	0x0
0	MBKEN	0x1

Table 74. FMC_BTRx bitfields (mode 1)

Bit number	Bit name	Value to set
31:30	Reserved	0x0
29:28	ACCMOD	Don’t care
27:24	DATLAT	Don’t care
23:20	CLKDIV	Don’t care
19:16	BUSTURN	Time between NEx high to NEx low (BUSTURN HCLK).
15:8	DATAST	Duration of the second access phase (DATAST+1 HCLK cycles for write accesses, DATAST HCLK cycles for read accesses).
7:4	ADDHLD	Don’t care
3:0	ADDSET	Duration of the first access phase (ADDSET HCLK cycles). Minimum value for ADDSET is 0.

Mode A - SRAM/PSRAM (CRAM) OE toggling

Figure 40. Mode A read access waveforms

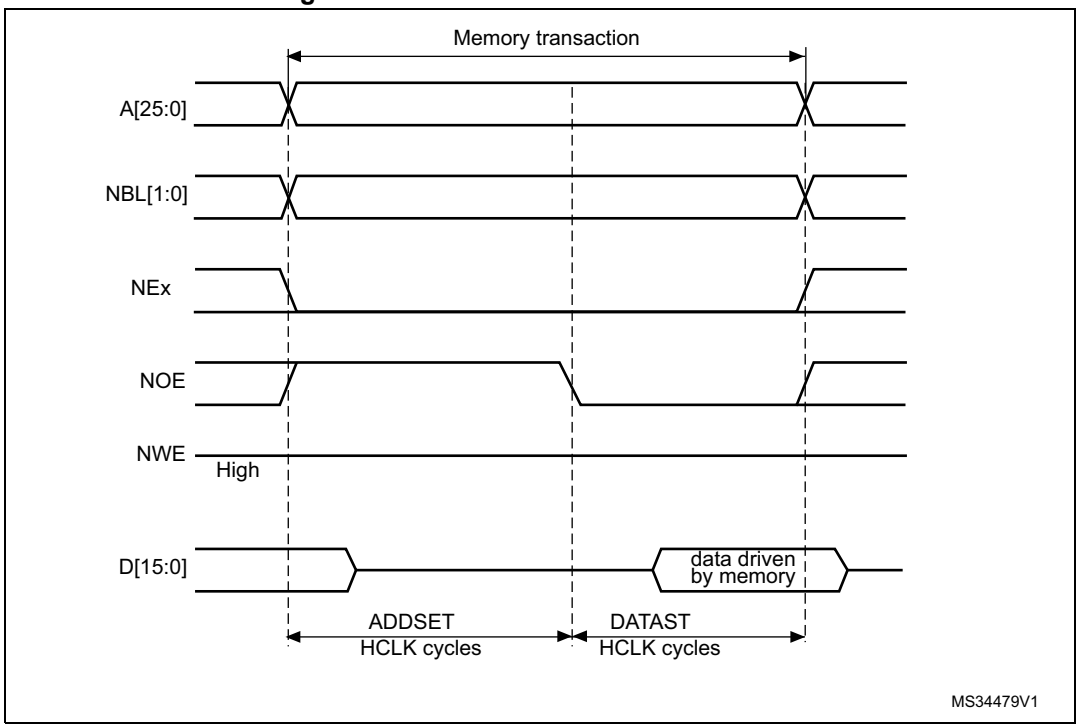

1. NBL[1:0] are driven low during the read access

Figure 41. Mode A write access waveforms

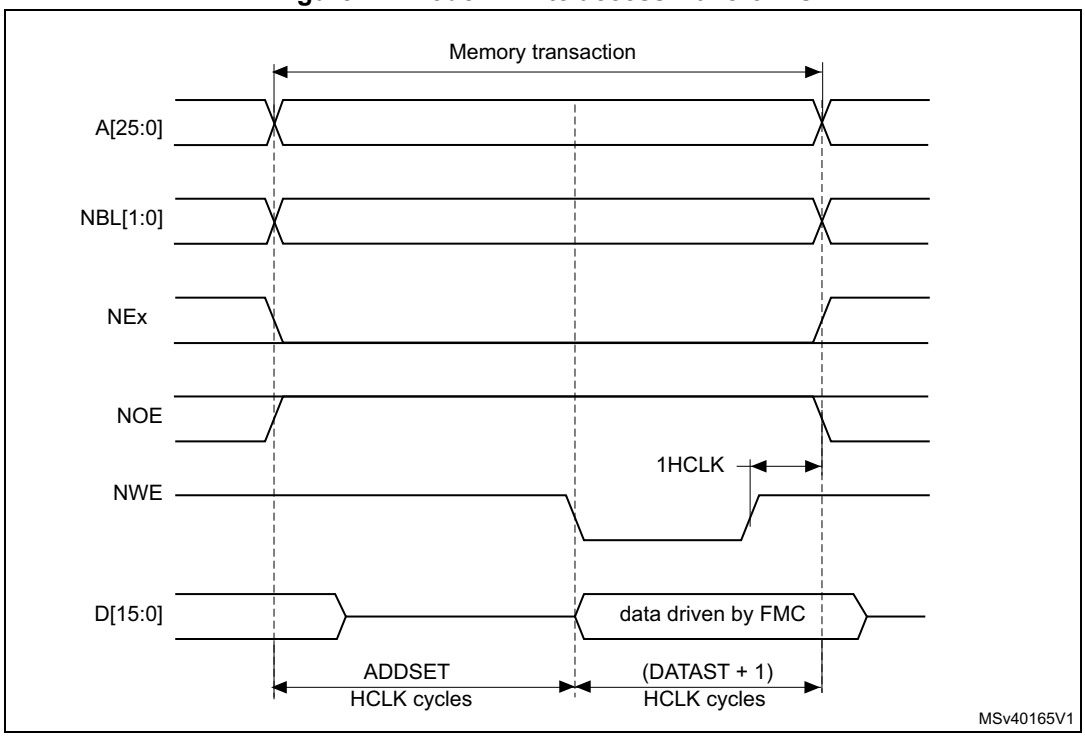

The differences compared with Mode 1 are the toggling of NOE and the independent read and write timings.

Table 75. FMC_BCRx bitfields (mode A)

Bit number	Bit name	Value to set
31:22	Reserved	0x000
21	WFDIS	As needed (this bit is reserved for STM32L47x/L48x devices)
20	CCLKEN	As needed
19	CBURSTRW	0x0 (no effect in Asynchronous mode)
18:16	CPSIZE	0x0 (no effect in Asynchronous mode)
15	ASYNCWAIT	Set to 1 if the memory supports this feature. Otherwise keep at 0.
14	EXTMOD	0x1
13	WAITEN	0x0 (no effect in Asynchronous mode)
12	WREN	As needed
11	WAITCFG	Don’t care
10	Reserved	0x0
9	WAITPOL	Meaningful only if bit 15 is 1
8	BURSTEN	0x0
7	Reserved	0x1
6	FACCEN	Don’t care
5:4	MWID	As needed
3:2	MTYP	As needed, exclude 0x2 (NOR Flash memory)
1	MUXEN	0x0
0	MBKEN	0x1

Table 76. FMC_BTRx bitfields (mode A)

Bit number	Bit name	Value to set
31:30	Reserved	0x0
29:28	ACCMOD	0x0
27:24	DATLAT	Don’t care
23:20	CLKDIV	Don’t care
19:16	BUSTURN	Time between NEx high to NEx low (BUSTURN HCLK).
15:8	DATAST	Duration of the second access phase (DATAST HCLK cycles) for read accesses.
7:4	ADDHLD	Don’t care
3:0	ADDSET	Duration of the first access phase (ADDSET HCLK cycles) for read accesses. Minimum value for ADDSET is 0.

Table 77. FMC_BWTRx bitfields (mode A)

Bit number	Bit name	Value to set
31:30	Reserved	0x0
29:28	ACCMOD	0x0
27:24	DATLAT	Don’t care
23:20	CLKDIV	Don’t care
19:16	BUSTURN	Time between NEx high to NEx low (BUSTURN HCLK).
15:8	DATAST	Duration of the second access phase (DATAST HCLK cycles) for write accesses.
7:4	ADDHLD	Don’t care
3:0	ADDSET	Duration of the first access phase (ADDSET HCLK cycles) for write accesses. Minimum value for ADDSET is 0.

Mode 2/B - NOR Flash

Figure 42. Mode 2 and mode B read access waveforms

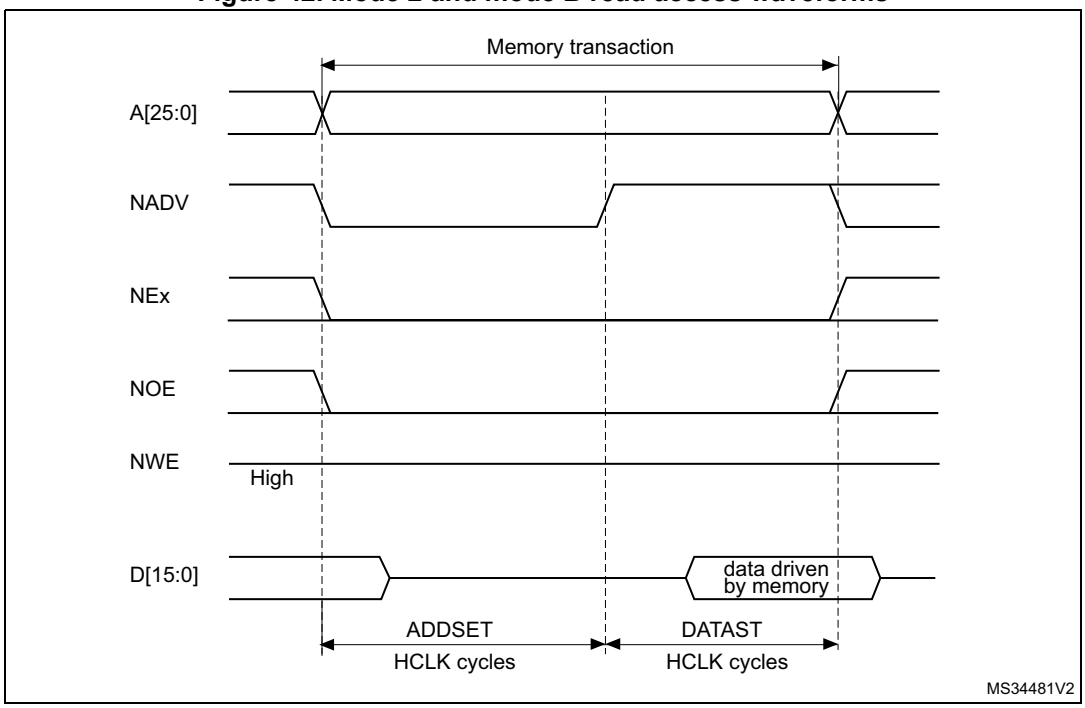

Figure 43. Mode 2 write access waveforms

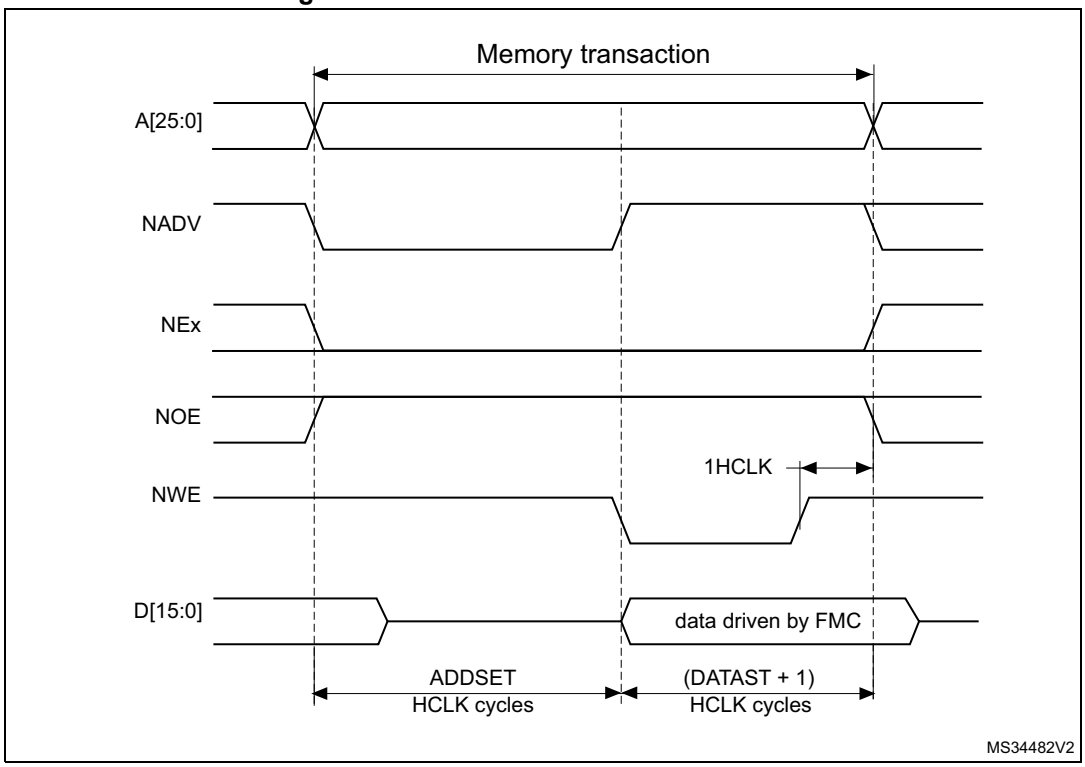

Figure 44. Mode B write access waveforms

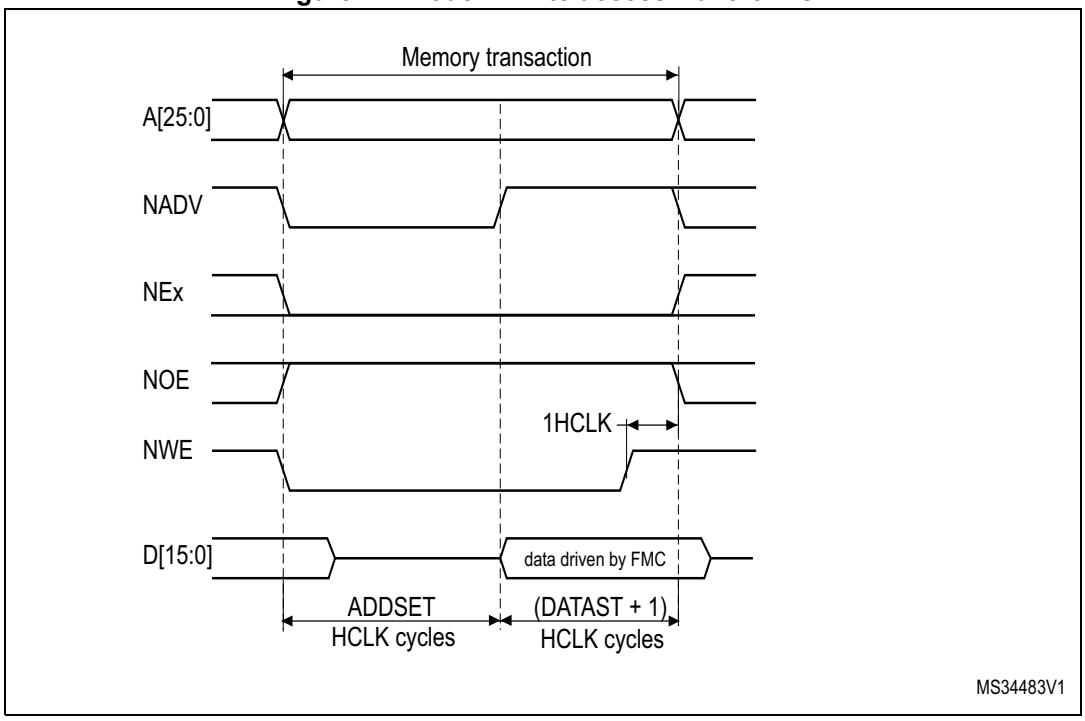

The differences with mode 1 are the toggling of NWE and the independent read and write timings when extended mode is set (mode B).

Table 78. FMC_BCRx bitfields (mode 2/B)

Bit number	Bit name	Value to set
31:22	Reserved	0x000
21	WFDIS	As needed (this bit is reserved for STM32L47x/L48x devices)
20	CCLKEN	As needed
19	CBURSTRW	0x0 (no effect in Asynchronous mode)
18:16	CPSIZE	0x0 (no effect in Asynchronous mode)
15	ASYNCWAIT	Set to 1 if the memory supports this feature. Otherwise keep at 0.
14	EXTMOD	0x1 for mode B, 0x0 for mode 2
13	WAITEN	0x0 (no effect in Asynchronous mode)
12	WREN	As needed
11	WAITCFG	Don’t care
10	Reserved	0x0
9	WAITPOL	Meaningful only if bit 15 is 1
8	BURSTEN	0x0
7	Reserved	0x1
6	FACCEN	0x1
5:4	MWID	As needed
3:2	MTYP	0x2 (NOR Flash memory)
1	MUXEN	0x0
0	MBKEN	0x1

Table 79. FMC_BTRx bitfields (mode 2/B)

Bit number	Bit name	Value to set
31:30	Reserved	0x0
29:28	ACCMOD	0x1 if Extended mode is set
27:24	DATLAT	Don’t care
23:20	CLKDIV	Don’t care
19:16	BUSTURN	Time between NEx high to NEx low (BUSTURN HCLK).
15:8	DATAST	Duration of the access second phase (DATAST HCLK cycles) for read accesses.
7:4	ADDHLD	Don’t care
3:0	ADDSET	Duration of the access first phase (ADDSET HCLK cycles) for read accesses. Minimum value for ADDSET is 0.

Table 80. FMC_BWTRx bitfields (mode 2/B)

Bit number	Bit name	Value to set
31:30	Reserved	0x0
29:28	ACCMOD	0x1 if Extended mode is set
27:24	DATLAT	Don't care
23:20	CLKDIV	Don't care
19:16	BUSTURN	Time between NEx high to NEx low (BUSTURN HCLK).
15:8	DATAST	Duration of the access second phase (DATAST HCLK cycles) for write accesses.
7:4	ADDHLD	Don't care
3:0	ADDSET	Duration of the access first phase (ADDSET HCLK cycles) for write accesses. Minimum value for ADDSET is 0.

Note: The FMC_BWTRx register is valid only if the Extended mode is set (mode B), otherwise its content is don't care.

Mode C - NOR Flash - OE toggling

Figure 45. Mode C read access waveforms

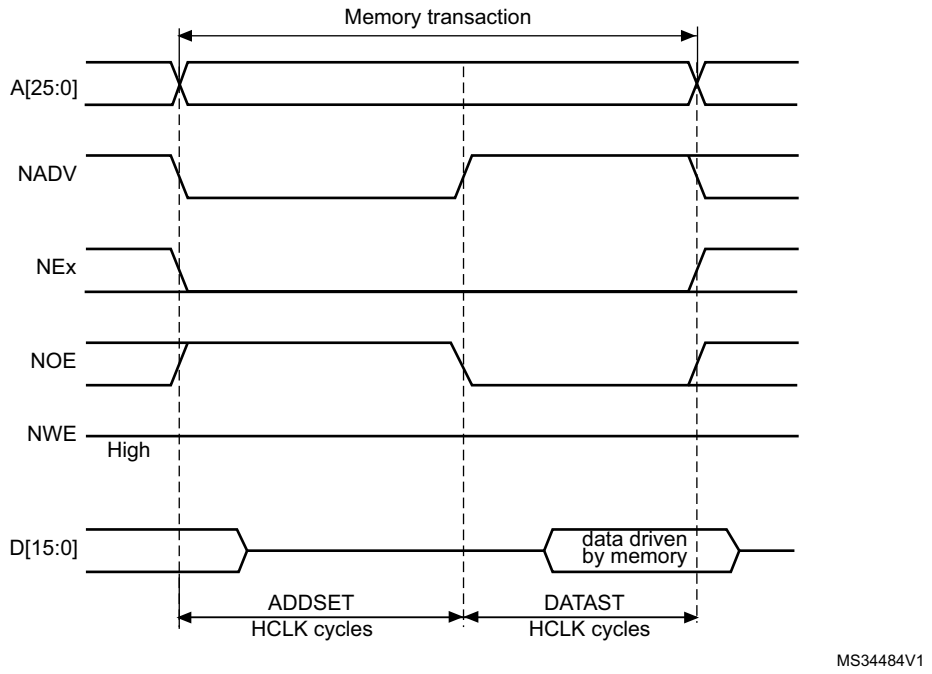

Figure 46. Mode C write access waveforms

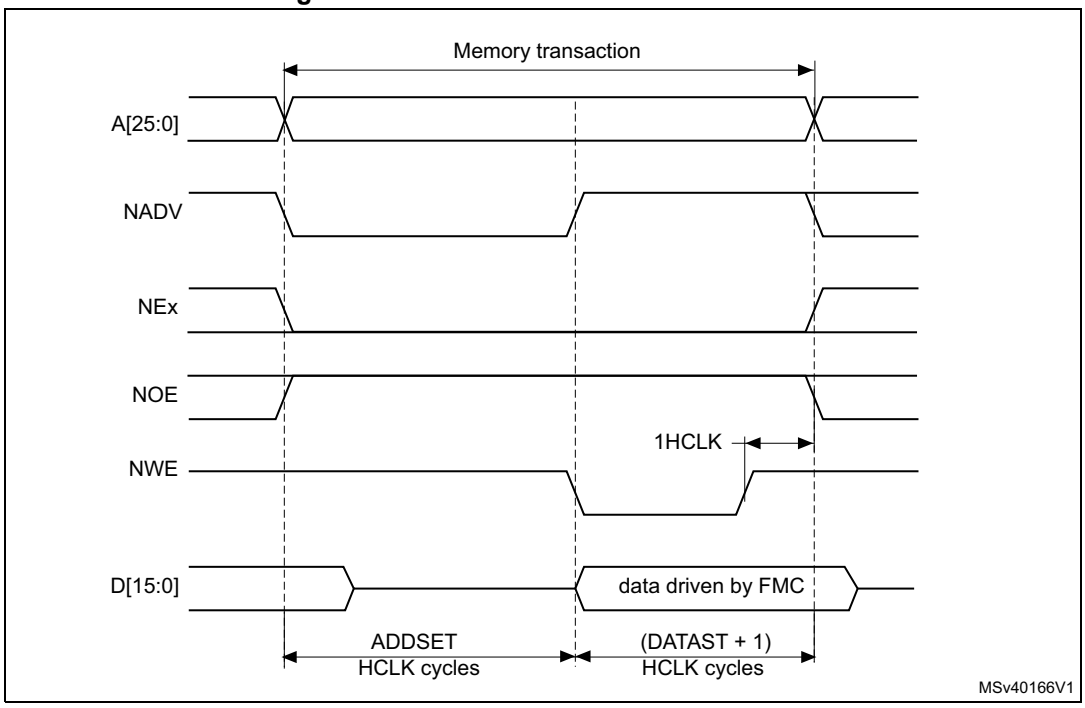

The differences compared with mode 1 are the toggling of NOE and the independent read and write timings.

Table 81. FMC_BCRx bitfields (mode C)

Bit number	Bit name	Value to set
31:22	Reserved	0x000
21	WFDIS	As needed (this bit is reserved for STM32L47x/L48x devices)
20	CCLKEN	As needed
19	CBURSTRW	0x0 (no effect in Asynchronous mode)
18:16	CPSIZE	0x0 (no effect in Asynchronous mode)
15	ASYNCWAIT	Set to 1 if the memory supports this feature. Otherwise keep at 0.
14	EXTMOD	0x1
13	WAITEN	0x0 (no effect in Asynchronous mode)
12	WREN	As needed
11	WAITCFG	Don’t care
10	Reserved	0x0
9	WAITPOL	Meaningful only if bit 15 is 1
8	BURSTEN	0x0
7	Reserved	0x1
6	FACCEN	0x1
5:4	MWID	As needed

Table 81. FMC_BCRx bitfields (mode C) (continued)

Bit number	Bit name	Value to set
3:2	MTYP	0x02 (NOR Flash memory)
1	MUXEN	0x0
0	MBKEN	0x1

Table 82. FMC_BTRx bitfields (mode C)

Bit number	Bit name	Value to set
31:30	Reserved	0x0
29:28	ACCMOD	0x2
27:24	DATLAT	0x0
23:20	CLKDIV	0x0
19:16	BUSTURN	Time between NEx high to NEx low (BUSTURN HCLK).
15:8	DATAST	Duration of the second access phase (DATAST HCLK cycles) for read accesses.
7:4	ADDHLD	Don’t care
3:0	ADDSET	Duration of the first access phase (ADDSET HCLK cycles) for read accesses. Minimum value for ADDSET is 0.

Table 83. FMC_BWTRx bitfields (mode C)

Bit number	Bit name	Value to set
31:30	Reserved	0x0
29:28	ACCMOD	0x2
27:24	DATLAT	Don’t care
23:20	CLKDIV	Don’t care
19:16	BUSTURN	Time between NEx high to NEx low (BUSTURN HCLK).
15:8	DATAST	Duration of the second access phase (DATAST HCLK cycles) for write accesses.
7:4	ADDHLD	Don’t care
3:0	ADDSET	Duration of the first access phase (ADDSET HCLK cycles) for write accesses. Minimum value for ADDSET is 0.

Mode D - asynchronous access with extended address

Figure 47. Mode D read access waveforms

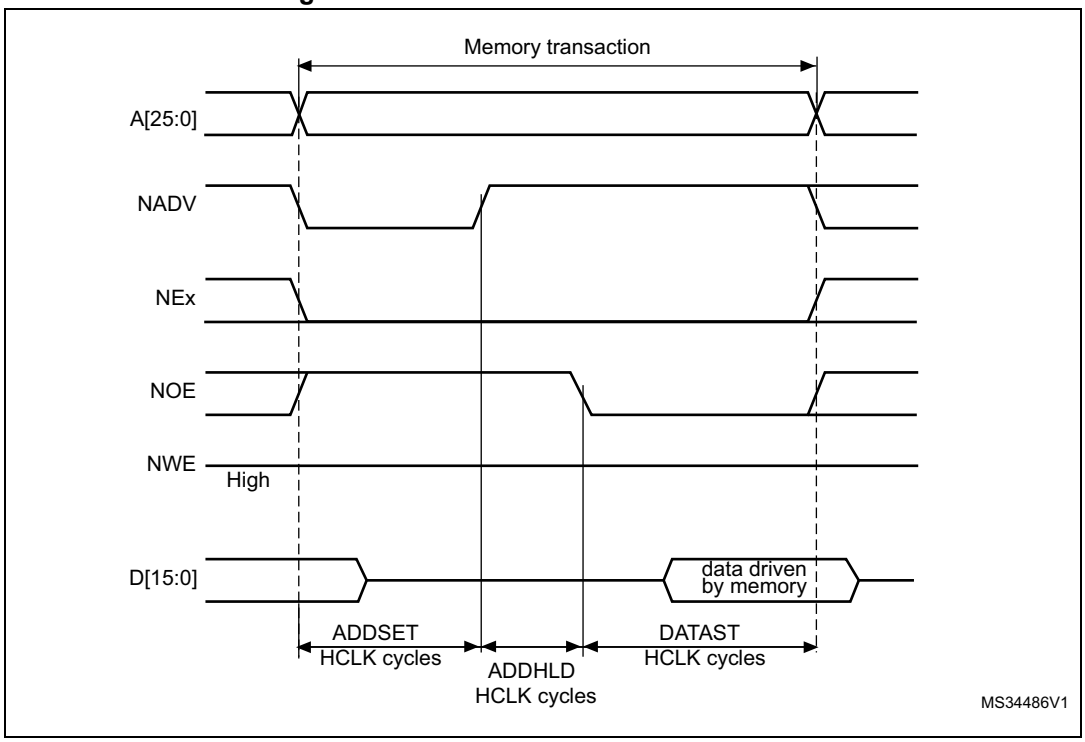

Figure 48. Mode D write access waveforms

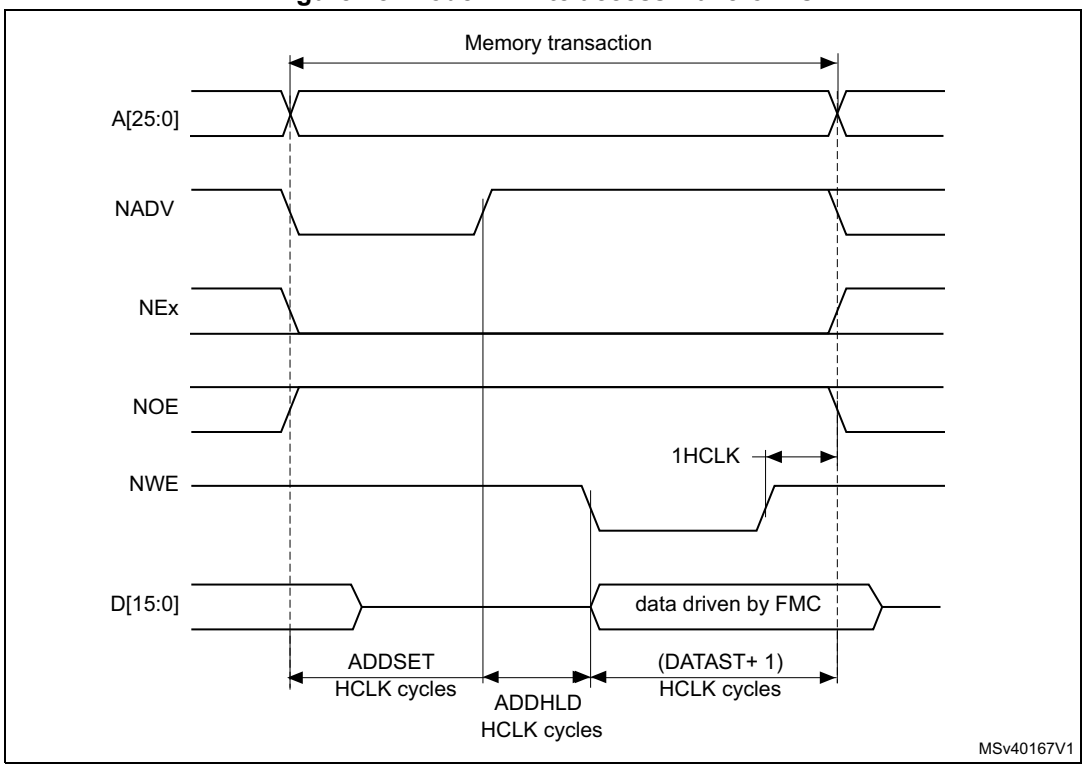

The differences with mode 1 are the toggling of NOE that goes on toggling after NADV changes and the independent read and write timings.

Table 84. FMC_BCRx bitfields (mode D)

Bit number	Bit name	Value to set
31:22	Reserved	0x000
21	WFDIS	As needed (this bit is reserved for STM32L47x/L48x devices)
20	CCLKEN	As needed
19	CBURSTRW	0x0 (no effect in Asynchronous mode)
18:16	CPSIZE	0x0 (no effect in Asynchronous mode)
15	ASYNCWAIT	Set to 1 if the memory supports this feature. Otherwise keep at 0.
14	EXTMOD	0x1
13	WAITEN	0x0 (no effect in Asynchronous mode)
12	WREN	As needed
11	WAITCFG	Don’t care
10	Reserved	0x0
9	WAITPOL	Meaningful only if bit 15 is 1
8	BURSTEN	0x0
7	Reserved	0x1
6	FACCEN	Set according to memory support
5:4	MWID	As needed
3:2	MTYP	As needed
1	MUXEN	0x0
0	MBKEN	0x1

Table 85. FMC_BTRx bitfields (mode D)

Bit number	Bit name	Value to set
31:30	Reserved	0x0
29:28	ACCMOD	0x3
27:24	DATLAT	Don’t care
23:20	CLKDIV	Don’t care
19:16	BUSTURN	Time between NEx high to NEx low (BUSTURN HCLK).
15:8	DATAST	Duration of the second access phase (DATAST HCLK cycles) for read accesses.
7:4	ADDHLD	Duration of the middle phase of the read access (ADDHLD HCLK cycles)
3:0	ADDSET	Duration of the first access phase (ADDSET HCLK cycles) for read accesses. Minimum value for ADDSET is 1.

Table 86. FMC_BWTRx bitfields (mode D)

Bit number	Bit name	Value to set
31:30	Reserved	0x0
29:28	ACCMOD	0x3
27:24	DATLAT	Don't care
23:20	CLKDIV	Don't care
19:16	BUSTURN	Time between NEx high to NEx low (BUSTURN HCLK).
15:8	DATAST	Duration of the second access phase (DATAST + 1 HCLK cycles) for write accesses.
7:4	ADDHLD	Duration of the middle phase of the write access (ADDHLD HCLK cycles)
3:0	ADDSET	Duration of the first access phase (ADDSET HCLK cycles) for write accesses. Minimum value for ADDSET is 1.

Muxed mode - multiplexed asynchronous access to NOR Flash memory

Figure 49. Muxed read access waveforms

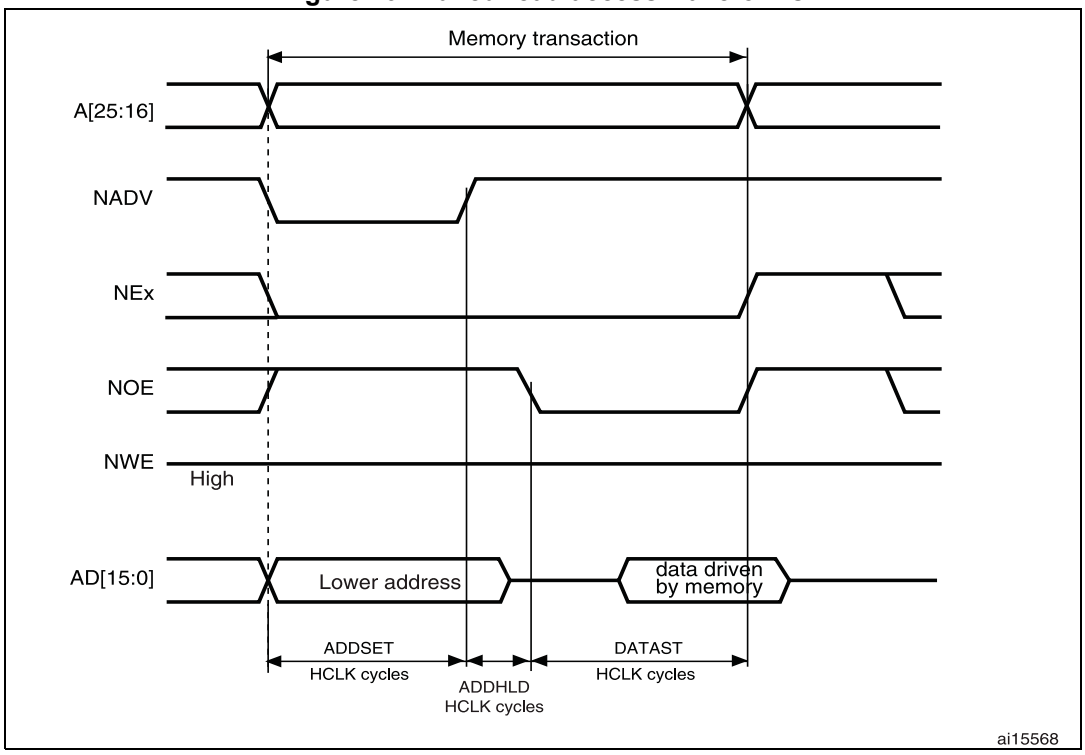

Figure 50. Muxed write access waveforms

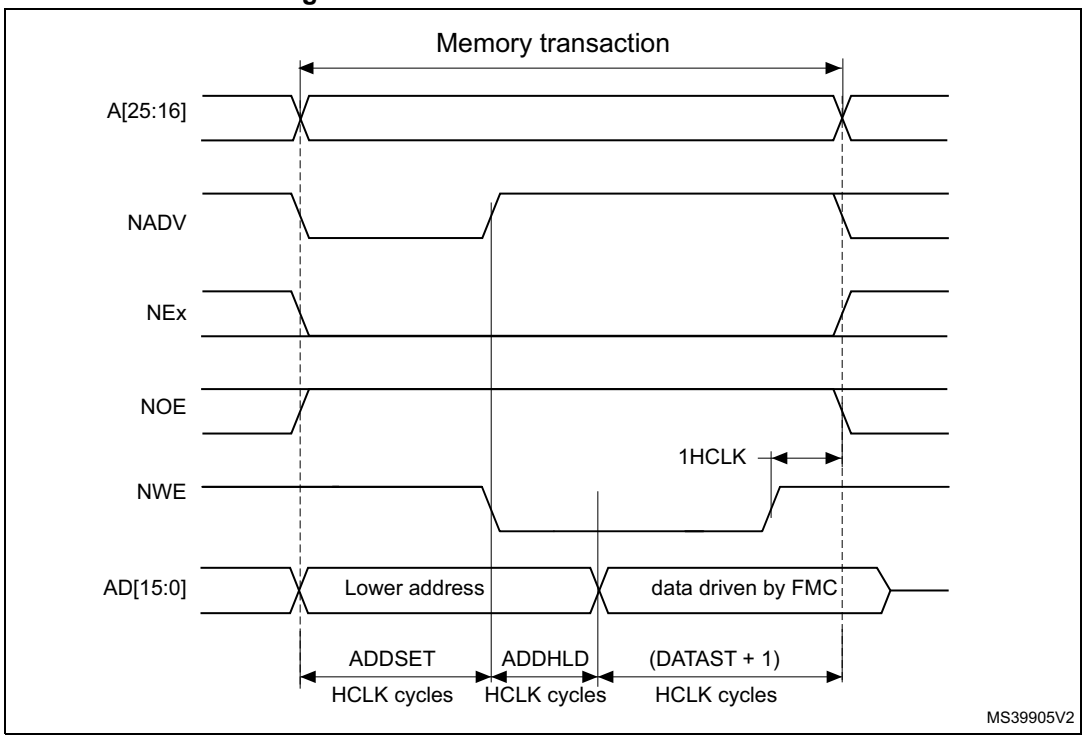

The difference with mode D is the drive of the lower address byte(s) on the data bus.

Table 87. FMC_BCRx bitfields (Muxed mode)

Bit number	Bit name	Value to set
31:22	Reserved	0x000
21	WFDIS	As needed (this bit is reserved for STM32L47x/L48x devices)
20	CCLKEN	As needed
19	CBURSTRW	0x0 (no effect in Asynchronous mode)
18:16	CPSIZE	0x0 (no effect in Asynchronous mode)
15	ASYNCWAIT	Set to 1 if the memory supports this feature. Otherwise keep at 0.
14	EXTMOD	0x0
13	WAITEN	0x0 (no effect in Asynchronous mode)
12	WREN	As needed
11	WAITCFG	Don’t care
10	Reserved	0x0
9	WAITPOL	Meaningful only if bit 15 is 1
8	BURSTEN	0x0
7	Reserved	0x1
6	FACCEN	0x1
5:4	MWID	As needed

Table 87. FMC_BCRx bitfields (Muxed mode) (continued)

Bit number	Bit name	Value to set
3:2	MTYP	0x2 (NOR Flash memory) or 0x1(PSRAM)
1	MUXEN	0x1
0	MBKEN	0x1

Table 88. FMC_BTRx bitfields (Muxed mode)

Bit number	Bit name	Value to set
31:30	Reserved	0x0
29:28	ACCMOD	0x0
27:24	DATLAT	Don’t care
23:20	CLKDIV	Don’t care
19:16	BUSTURN	Time between NEx high to NEx low (BUSTURN HCLK).
15:8	DATAST	Duration of the second access phase (DATAST HCLK cycles for read accesses and DATAST+1 HCLK cycles for write accesses).
7:4	ADDHLD	Duration of the middle phase of the access (ADDHLD HCLK cycles).
3:0	ADDSET	Duration of the first access phase (ADDSET HCLK cycles). Minimum value for ADDSET is 1.

WAIT management in asynchronous accesses

If the asynchronous memory asserts the WAIT signal to indicate that it is not yet ready to accept or to provide data, the ASYNCWAIT bit has to be set in FMC_BCRx register.

If the WAIT signal is active (high or low depending on the WAITPOL bit), the second access phase (Data setup phase), programmed by the DATAST bits, is extended until WAIT becomes inactive. Unlike the data setup phase, the first access phases (Address setup and Address hold phases), programmed by the ADDSET and ADDHLD bits, are not WAIT sensitive and so they are not prolonged.

The data setup phase must be programmed so that WAIT can be detected 4 HCLK cycles before the end of the memory transaction. The following cases must be considered:

1. The memory asserts the WAIT signal aligned to NOE/NWE which toggles:

$$DATAST \geq (4 \times HCLK) + max_wait_assertion_time$$

2. The memory asserts the WAIT signal aligned to NEx (or NOE/NWE not toggling):
   if

$$max_wait_assertion_time > address_phase + hold_phase$$

   then:

$$DATAST \geq (4 \times HCLK) + (max_wait_assertion_time - address_phase - hold_phase)$$

   otherwise

$$DATAST \geq 4 \times HCLK$$

   where max_wait_assertion_time is the maximum time taken by the memory to assert the WAIT signal once NEx/NOE/NWE is low.

Figure 51 and *Figure 52* show the number of HCLK clock cycles that are added to the memory access phase after WAIT is released by the asynchronous memory (independently of the above cases).

Figure 51. Asynchronous wait during a read access waveforms

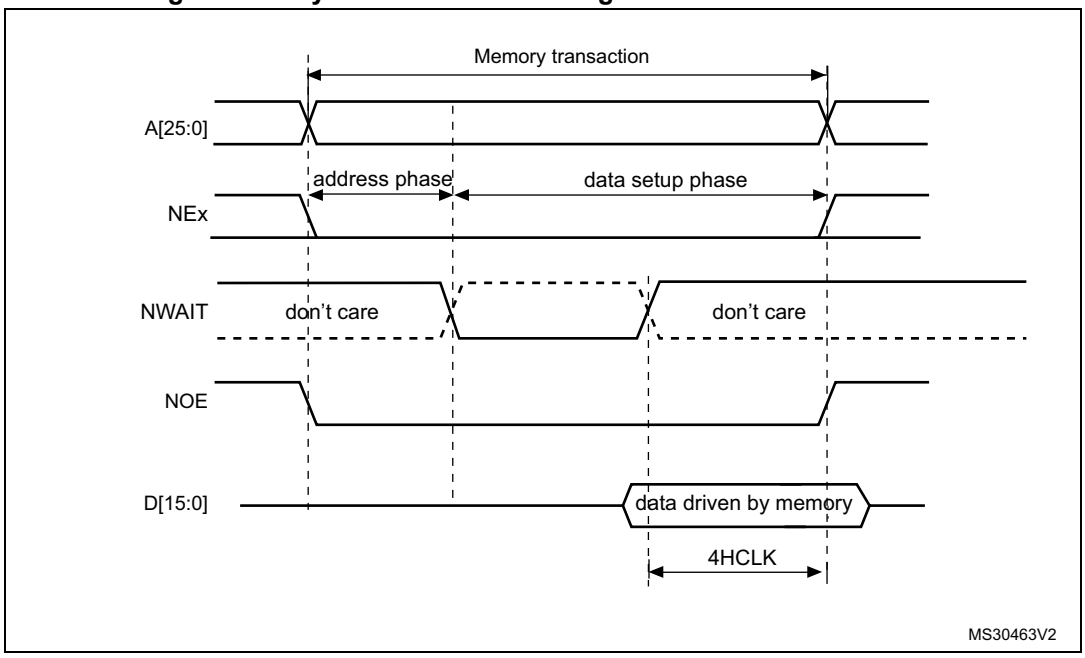

1. NWAIT polarity depends on WAITPOL bit setting in FMC_BCRx register.

Figure 52. Asynchronous wait during a write access waveforms

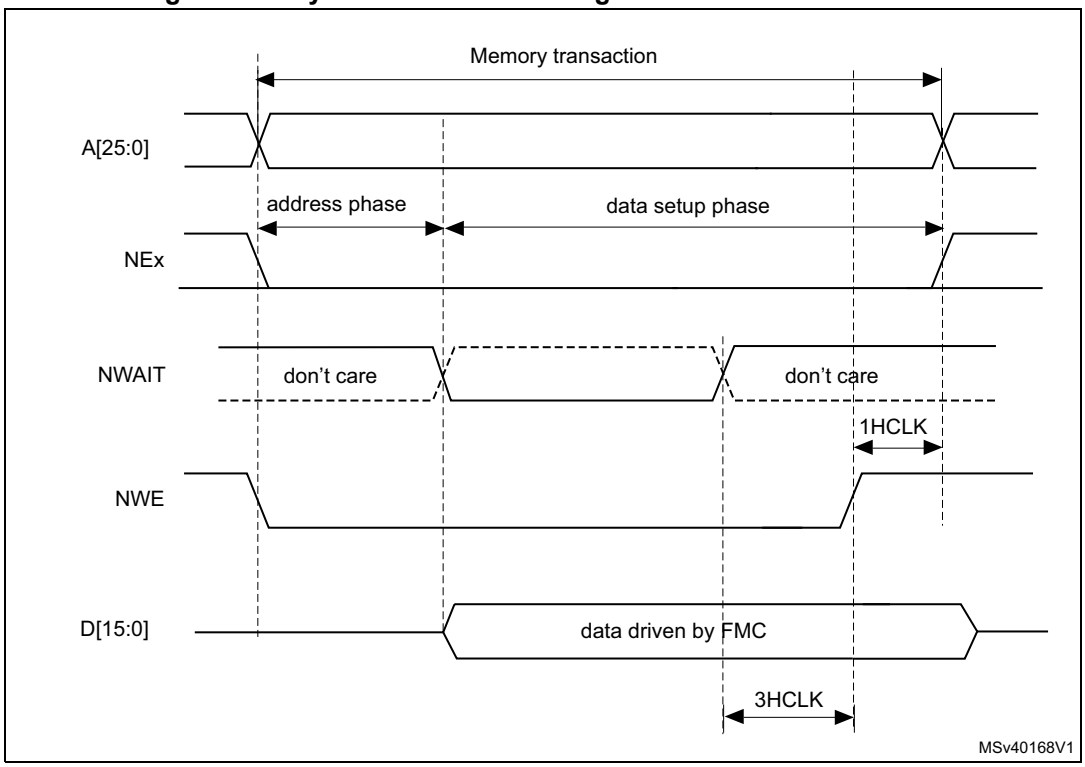

1. NWAIT polarity depends on WAITPOL bit setting in FMC_BCRx register.

16.6.5 Synchronous transactions

The memory clock, FMC_CLK, is a submultiple of HCLK. It depends on the value of CLKDIV and the MWID/ AHB data size, following the formula given below:

$$\text{FMC_CLK divider ratio} = \max(\text{CLKDIV} + 1, \text{MWID}(\text{AHB data size}))$$

Whatever MWID size: 16 or 8-bit, the FMC_CLK divider ratio is always defined by the programmed CLKDIV value.

Example:

- If CLKDIV=1, MWID = 16 bits, AHB data size=8 bits, FMC_CLK=HCLK/2.

NOR Flash memories specify a minimum time from NADV assertion to CLK high. To meet this constraint, the FMC does not issue the clock to the memory during the first internal clock cycle of the synchronous access (before NADV assertion). This guarantees that the rising edge of the memory clock occurs in the middle of the NADV low pulse.

Data latency versus NOR memory latency

The data latency is the number of cycles to wait before sampling the data. The DATLAT value must be consistent with the latency value specified in the NOR Flash configuration register. The FMC does not include the clock cycle when NADV is low in the data latency count.

Caution: Some NOR Flash memories include the NADV Low cycle in the data latency count, so that the exact relation between the NOR Flash latency and the FMC DATLAT parameter can be either:

- NOR Flash latency = (DATLAT + 2) CLK clock cycles
- or NOR Flash latency = (DATLAT + 3) CLK clock cycles

Some recent memories assert NWAIT during the latency phase. In such cases DATLAT can be set to its minimum value. As a result, the FMC samples the data and waits long enough to evaluate if the data are valid. Thus the FMC detects when the memory exits latency and real data are processed.

Other memories do not assert NWAIT during latency. In this case the latency must be set correctly for both the FMC and the memory, otherwise invalid data are mistaken for good data, or valid data are lost in the initial phase of the memory access.

Single-burst transfer

When the selected bank is configured in Burst mode for synchronous accesses, if for example an AHB single-burst transaction is requested on 16-bit memories, the FMC performs a burst transaction of length 1 (if the AHB transfer is 16 bits), or length 2 (if the AHB transfer is 32 bits) and de-assert the chip select signal when the last data is strobed.

Such transfers are not the most efficient in terms of cycles compared to asynchronous read operations. Nevertheless, a random asynchronous access would first require to re-program the memory access mode, which would altogether last longer.

Cross boundary page for CellularRAM™ 1.5

CellularRAM™ 1.5 does not allow burst access to cross the page boundary. The FMC controller allows to split automatically the burst access when the memory page size is reached by configuring the CPSIZE bits in the FMC_BCR1 register following the memory page size.

Wait management

For synchronous NOR Flash memories, NWAIT is evaluated after the programmed latency period, which corresponds to (DATLAT+2) CLK clock cycles.

If NWAIT is active (low level when WAITPOL = 0, high level when WAITPOL = 1), wait states are inserted until NWAIT is inactive (high level when WAITPOL = 0, low level when WAITPOL = 1).

When NWAIT is inactive, the data is considered valid either immediately (bit WAITCFG = 1) or on the next clock edge (bit WAITCFG = 0).

During wait-state insertion via the NWAIT signal, the controller continues to send clock pulses to the memory, keeping the chip select and output enable signals valid. It does not consider the data as valid.

In Burst mode, there are two timing configurations for the NOR Flash NWAIT signal:

- The Flash memory asserts the NWAIT signal one data cycle before the wait state (default after reset).
- The Flash memory asserts the NWAIT signal during the wait state

The FMC supports both NOR Flash wait state configurations, for each chip select, thanks to the WAITCFG bit in the FMC_BCRx registers (x = 0..3).

Figure 53. Wait configuration waveforms

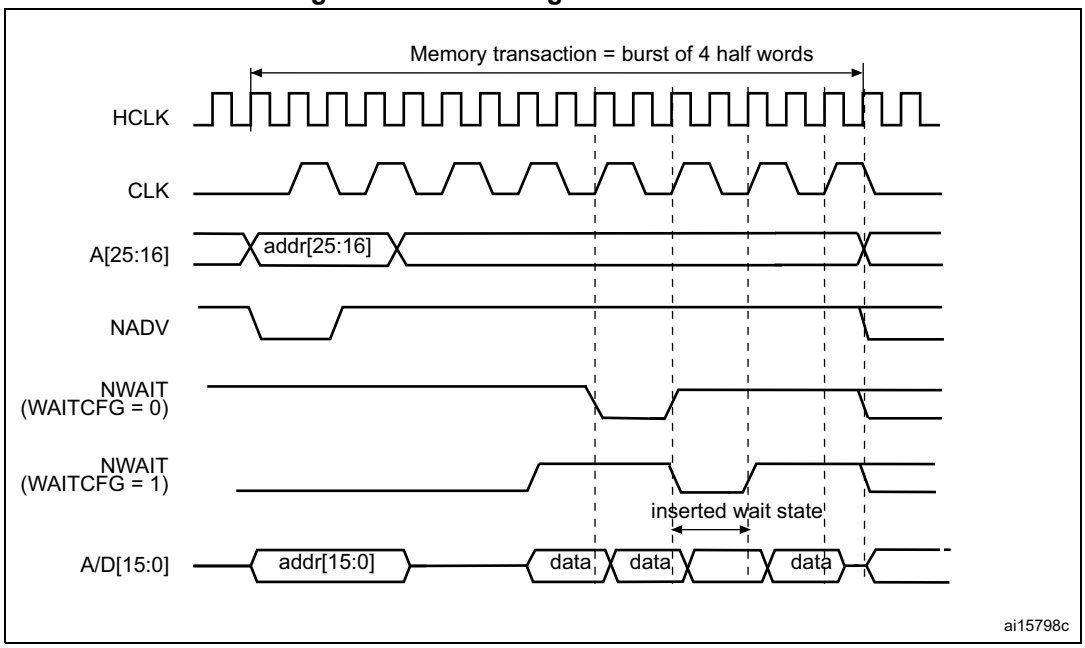

Figure 54. Synchronous multiplexed read mode waveforms - NOR, PSRAM (CRAM)

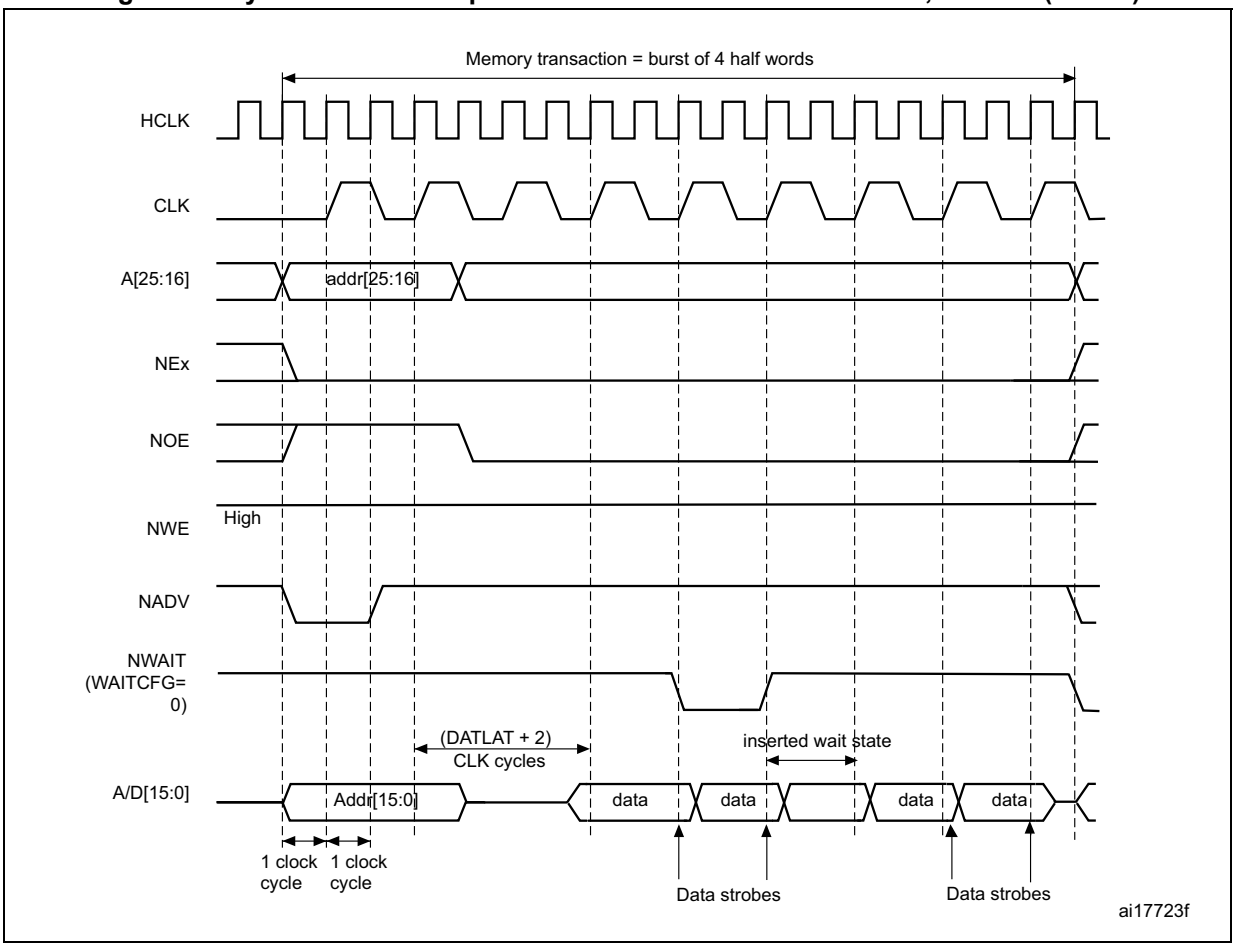

1. Byte lane outputs (NBL are not shown; for NOR access, they are held high, and, for PSRAM (CRAM) access, they are held low.

Table 89. FMC_BCRx bitfields (Synchronous multiplexed read mode)

Bit number	Bit name	Value to set
31:22	Reserved	0x000
21	WFDIS	As needed (this bit is reserved for STM32L47x/L48x devices)
20	CCLKEN	As needed
19	CBURSTRW	No effect on synchronous read
18:16	CPSIZE	0x0 (no effect in Asynchronous mode)
15	ASYNCWAIT	0x0
14	EXTMOD	0x0
13	WAITEN	To be set to 1 if the memory supports this feature, to be kept at 0 otherwise
12	WREN	No effect on synchronous read
11	WAITCFG	To be set according to memory
10	Reserved	0x0

Table 89. FMC_BCRx bitfields (Synchronous multiplexed read mode) (continued)

Bit number	Bit name	Value to set
9	WAITPOL	To be set according to memory
8	BURSTEN	0x1
7	Reserved	0x1
6	FACCEN	Set according to memory support (NOR Flash memory)
5-4	MWID	As needed
3-2	MTYP	0x1 or 0x2
1	MUXEN	As needed
0	MBKEN	0x1

Table 90. FMC_BTRx bitfields (Synchronous multiplexed read mode)

Bit number	Bit name	Value to set
31:30	Reserved	0x0
29:28	ACCMOD	0x0
27-24	DATLAT	Data latency
27-24	DATLAT	Data latency
23-20	CLKDIV	0x0 to get CLK = HCLK (Not supported) 0x1 to get CLK = 2 × HCLK ..
19-16	BUSTURN	Time between NEx high to NEx low (BUSTURN HCLK).
15-8	DATAST	Don’t care
7-4	ADDHLD	Don’t care
3-0	ADDSET	Don’t care

Figure 55. Synchronous multiplexed write mode waveforms - PSRAM (CRAM)

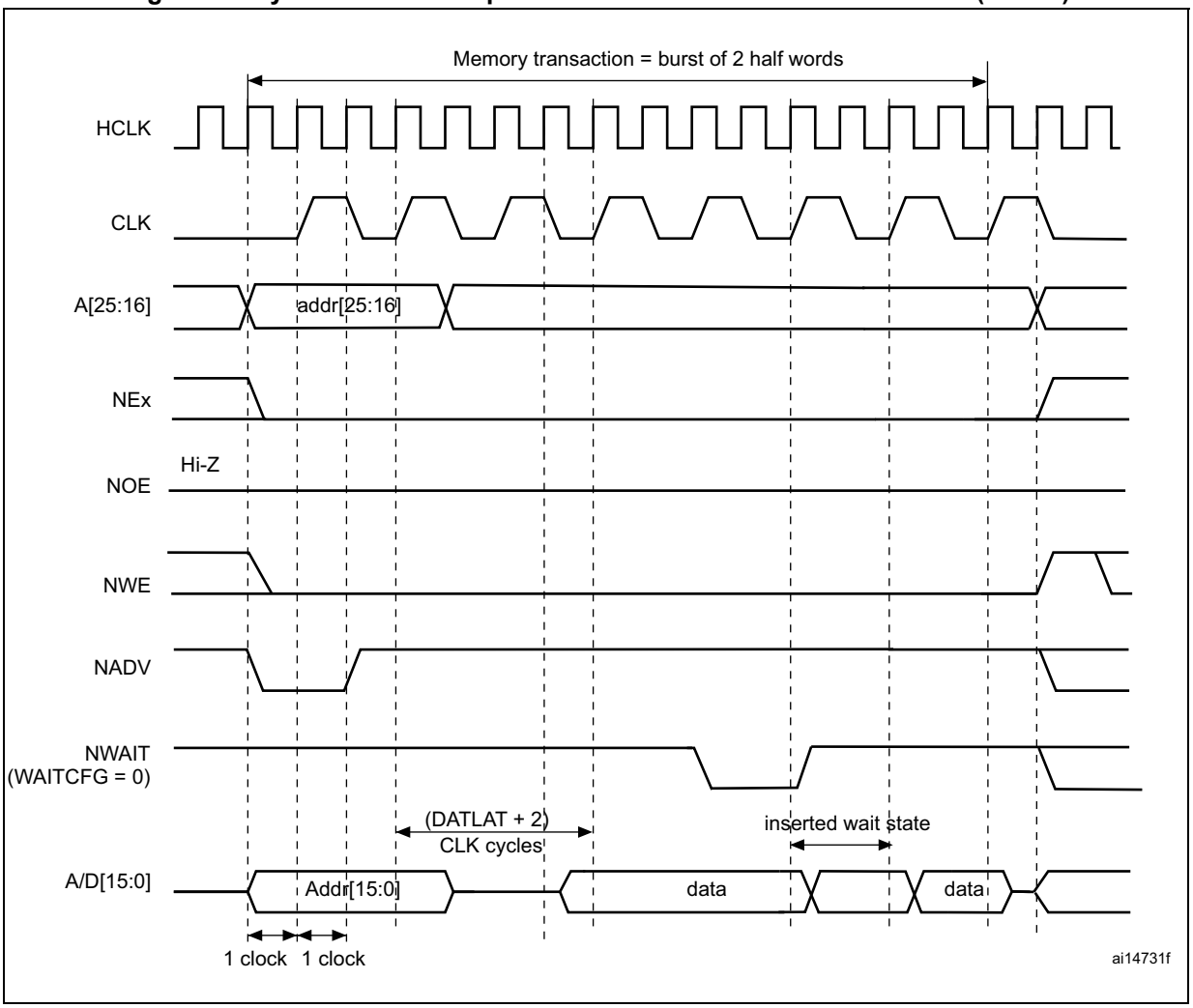

1. The memory must issue NWAIT signal one cycle in advance, accordingly WAITCFG must be programmed to 0.
2. Byte Lane (NBL) outputs are not shown, they are held low while NEx is active.

Table 91. FMC_BCRx bitfields (Synchronous multiplexed write mode)

Bit number	Bit name	Value to set
31:22	Reserved	0x000
21	WFDIS	As needed (this bit is reserved for STM32L47x/L48x devices)
20	CCLKEN	As needed
19	CBURSTRW	0x1
18:16	CPSIZE	As needed (0x1 for CRAM 1.5)
15	ASYNCWAIT	0x0
14	EXTMOD	0x0
13	WAITEN	To be set to 1 if the memory supports this feature, to be kept at 0 otherwise.

Table 91. FMC_BCRx bitfields (Synchronous multiplexed write mode) (continued)

Bit number	Bit name	Value to set
12	WREN	0x1
11	WAITCFG	0x0
10	Reserved	0x0
9	WAITPOL	to be set according to memory
8	BURSTEN	no effect on synchronous write
7	Reserved	0x1
6	FACCEN	Set according to memory support
5-4	MWID	As needed
3-2	MTYP	0x1
1	MUXEN	As needed
0	MBKEN	0x1

Table 92. FMC_BTRx bitfields (Synchronous multiplexed write mode)

Bit number	Bit name	Value to set
31-30	Reserved	0x0
29:28	ACCMOD	0x0
27-24	DATLAT	Data latency
23-20	CLKDIV	0x0 to get CLK = HCLK (not supported) 0x1 to get CLK = 2 × HCLK
19-16	BUSTURN	Time between NEx high to NEx low (BUSTURN HCLK).
15-8	DATAST	Don’t care
7-4	ADDHLD	Don’t care
3-0	ADDSET	Don’t care

16.6.6 NOR/PSRAM controller registers

SRAM/NOR-Flash chip-select control register for bank x (FMC_BCRx) (x = 1 to 4)

Address offset: 8 * (x – 1), (x = 1 to 4)

Reset value: Bank 1: 0x0000 30DB

Reset value: Bank 2: 0x0000 30D2

Reset value: Bank 3: 0x0000 30D2

Reset value: Bank 4: 0x0000 30D2

This register contains the control information of each memory bank, used for SRAMs, PSRAM and NOR Flash memories.

31	30	29	28	27	26	25	24	23	22	21	20	19	18	17	16
Res.	Res.	Res.	Res.	Res.	Res.	Res.	Res.	Res.	Res.	WFDIS	CCLK EN	CBURST RW	CPSIZE[2:0]		
										rw	rw	rw	rw	rw	rw

15	14	13	12	11	10	9	8	7	6	5	4	3	2	1	0
ASYNC WAIT	EXT MOD	WAIT EN	WREN	WAIT CFG	Res.	WAIT POL	BURST EN	Res.	FACC EN	MWID[1:0]		MTYP[1:0]		MUX EN	MBK EN
rw	rw	rw	rw	rw		rw	rw		rw	rw	rw	rw	rw	rw	rw

Bits 31:22 Reserved, must be kept at reset value.

Bit 21 **WFDIS:** Write FIFO disable

This bit disables the Write FIFO used by the FMC controller.

0: Write FIFO enabled (Default after reset)

1: Write FIFO disabled

Note: This bit is reserved for STM32L47x/L48x devices.

Note: The WFDIS bit of the FMC_BCR2..4 registers is don't care. It is only enabled through the FMC_BCR1 register.

Bit 20 **CCLKEN:** Continuous clock enable

This bit enables the FMC_CLK clock output to external memory devices.

0: The FMC_CLK is only generated during the synchronous memory access (read/write transaction). The FMC_CLK clock ratio is specified by the programmed CLKDIV value in the FMC_BCRx register (default after reset).

1: The FMC_CLK is generated continuously during asynchronous and synchronous access. The FMC_CLK clock is activated when the CCLKEN is set.

Note: The CCLKEN bit of the FMC_BCR2..4 registers is don't care. It is only enabled through the FMC_BCR1 register. Bank 1 must be configured in Synchronous mode to generate the FMC_CLK continuous clock.

Note: If CCLKEN bit is set, the FMC_CLK clock ratio is specified by CLKDIV value in the FMC_BTR1 register. CLKDIV in FMC_BWTR1 is don't care.

Note: If the Synchronous mode is used and CCLKEN bit is set, the synchronous memories connected to other banks than Bank 1 are clocked by the same clock (the CLKDIV value in the FMC_BTR2..4 and FMC_BWTR2..4 registers for other banks has no effect.)

Bit 19 **CBURSTRW:** Write burst enable

For PSRAM (CRAM) operating in Burst mode, the bit enables synchronous accesses during write operations. The enable bit for synchronous read accesses is the BURSTEN bit in the FMC_BCRx register.

0: Write operations are always performed in Asynchronous mode.

1: Write operations are performed in Synchronous mode.

Bits 18:16 **CPSIZE[2:0]**: CRAM page size

These are used for CellularRAM™ 1.5 which does not allow burst access to cross the address boundaries between pages. When these bits are configured, the FMC controller splits automatically the burst access when the memory page size is reached (refer to memory datasheet for page size).

000: No burst split when crossing page boundary (default after reset)

001: 128 bytes

010: 256 bytes

011: 512 bytes

100: 1024 bytes

Others: reserved

Bit 15 **ASYNCWAIT**: Wait signal during asynchronous transfers

This bit enables/disables the FMC to use the wait signal even during an asynchronous protocol.

0: NWAIT signal is not taken in to account when running an asynchronous protocol (default after reset).

1: NWAIT signal is taken in to account when running an asynchronous protocol.

Bit 14 **EXTMOD:** Extended mode enable

This bit enables the FMC to program the write timings for non multiplexed asynchronous accesses inside the FMC_BWTR register, thus resulting in different timings for read and write operations.

0: values inside FMC_BWTR register are not taken into account (default after reset)

1: values inside FMC_BWTR register are taken into account

Note: When the Extended mode is disabled, the FMC can operate in mode 1 or mode 2 as follows:

- *Mode 1 is the default mode when the SRAM/PSRAM memory type is selected (MTYP = 0x0 or 0x01)*
- *Mode 2 is the default mode when the NOR memory type is selected (MTYP = 0x10).*

Bit 13 **WAITEN:** Wait enable bit

This bit enables/disables wait-state insertion via the NWAIT signal when accessing the memory in Synchronous mode.

0: NWAIT signal is disabled (its level not taken into account, no wait state inserted after the programmed Flash latency period).

1: NWAIT signal is enabled (its level is taken into account after the programmed latency period to insert wait states if asserted) (default after reset).

Bit 12 **WREN:** Write enable bit

This bit indicates whether write operations are enabled/disabled in the bank by the FMC.

0: Write operations are disabled in the bank by the FMC, an AHB error is reported.

1: Write operations are enabled for the bank by the FMC (default after reset).

Bit 11 **WAITCFG:** Wait timing configuration

The NWAIT signal indicates whether the data from the memory are valid or if a wait state must be inserted when accessing the memory in Synchronous mode. This configuration bit determines if NWAIT is asserted by the memory one clock cycle before the wait state or during the wait state:

0: NWAIT signal is active one data cycle before wait state (default after reset).

1: NWAIT signal is active during wait state (not used for PSRAM).

Bit 10 Reserved, must be kept at reset value.

Bit 9 **WAITPOL:** Wait signal polarity bit

Defines the polarity of the wait signal from memory used for either in Synchronous or Asynchronous mode.
0: NWAIT active low (default after reset)
1: NWAIT active high

Bit 8 **BURSTEN:** Burst enable bit

This bit enables/disables synchronous accesses during read operations. It is valid only for synchronous memories operating in Burst mode.
0: Burst mode disabled (default after reset). Read accesses are performed in Asynchronous mode.
1: Burst mode enable. Read accesses are performed in Synchronous mode.

Bit 7 Reserved, must be kept at reset value.

Bit 6 **FACCEN:** Flash access enable

Enables NOR Flash memory access operations.
0: Corresponding NOR Flash memory access is disabled.
1: Corresponding NOR Flash memory access is enabled (default after reset).

Bits 5:4 **MWID[1:0]:** Memory data bus width

Defines the external memory device width, valid for all type of memories.
00: 8 bits
01: 16 bits (default after reset)
10: reserved
11: reserved

Bits 3:2 **MTYP[1:0]:** Memory type

Defines the type of external memory attached to the corresponding memory bank.
00: SRAM (default after reset for Bank 2...4)
01: PSRAM (CRAM)
10: NOR Flash/OneNAND Flash (default after reset for Bank 1)
11: reserved

Bit 1 **MUXEN:** Address/data multiplexing enable bit

When this bit is set, the address and data values are multiplexed on the data bus, valid only with NOR and PSRAM memories:
0: Address/data non multiplexed
1: Address/data multiplexed on databus (default after reset)

Bit 0 **MBKEN:** Memory bank enable bit

Enables the memory bank. After reset Bank1 is enabled, all others are disabled. Accessing a disabled bank causes an ERROR on AHB bus.
0: Corresponding memory bank is disabled.
1: Corresponding memory bank is enabled.

SRAM/NOR-Flash chip-select timing register for bank x (FMC_BTRx)

Address offset: 0x04 + 8 * (x – 1), (x = 1 to 4)

Reset value: 0x0FFF FFFF

This register contains the control information of each memory bank, used for SRAMs, PSRAM and NOR Flash memories.If the EXTMOD bit is set in the FMC_BCRx register, then this register is partitioned for write and read access, that is, 2 registers are available: one to

configure read accesses (this register) and one to configure write accesses (FMC_BWTRx registers).

31	30	29	28	27	26	25	24	23	22	21	20	19	18	17	16
Res.	Res.	ACCMOD[1:0]		DATLAT[3:0]				CLKDIV[3:0]				BUSTURN[3:0]			
		rw	rw	rw	rw	rw	rw	rw	rw	rw	rw	rw	rw	rw	rw
15	14	13	12	11	10	9	8	7	6	5	4	3	2	1	0
DATAST[7:0]								ADDHLD[3:0]				ADDSET[3:0]			
rw	rw	rw	rw	rw	rw	rw	rw	rw	rw	rw	rw	rw	rw	rw	rw

Bits 31:30 Reserved, must be kept at reset value.

Bits 29:28 **ACCMOD[1:0]:** Access mode

Specifies the asynchronous access modes as shown in the timing diagrams. These bits are taken into account only when the EXTMOD bit in the FMC_BCRx register is 1.

00: Access mode A

01: Access mode B

10: Access mode C

11: Access mode D

Bits 27:24 **DATLAT[3:0]:** (see note below bit descriptions): Data latency for synchronous memory

For synchronous access with read/write Burst mode enabled (BURSTEN / CBURSTRW bits set), defines the number of memory clock cycles (+2) to issue to the memory before reading/writing the first data:

This timing parameter is not expressed in HCLK periods, but in FMC_CLK periods.

For asynchronous access, this value is don't care.

0000: Data latency of 2 CLK clock cycles for first burst access

1111: Data latency of 17 CLK clock cycles for first burst access (default value after reset)

Bits 23:20 **CLKDIV[3:0]:** Clock divide ratio (for FMC_CLK signal)

Defines the period of FMC_CLK clock output signal, expressed in number of HCLK cycles:

0000: Reserved

0001: FMC_CLK period = 2 × HCLK periods

0010: FMC_CLK period = 3 × HCLK periods

1111: FMC_CLK period = 16 × HCLK periods (default value after reset)

In asynchronous NOR Flash, SRAM or PSRAM accesses, this value is don't care.

Note: Refer to Section 16.6.5: Synchronous transactions for FMC_CLK divider ratio formula)

Bits 19:16 **BUSTURN[3:0]:** Bus turnaround phase duration

These bits are written by software to add a delay at the end of a write-to-read (and read-to-write) transaction. This delay allows to match the minimum time between consecutive transactions (tEHEL from NEx high to NEx low) and the maximum time needed by the memory to free the data bus after a read access (tEHQZ). The programmed bus turnaround delay is inserted between an asynchronous read (muxed or mode D) or write transaction and any other asynchronous /synchronous read or write to or from a static bank. The bank can be the same or different in case of read, in case of write the bank can be different except for muxed or mode D.

In some cases, whatever the programmed BUSTURN values, the bus turnaround delay is fixed

as follows:

- The bus turnaround delay is not inserted between two consecutive asynchronous write transfers to the same static memory bank except for muxed mode and mode D.
- There is a bus turnaround delay of 1 HCLK clock cycle between:
  - –Two consecutive asynchronous read transfers to the same static memory bank except for muxed mode and mode D.
  - –An asynchronous read to an asynchronous or synchronous write to any static bank or dynamic bank except for muxed mode and mode D.
  - –An asynchronous (modes 1, 2, A, B or C) read and a read from another static bank.
- There is a bus turnaround delay of 2 HCLK clock cycle between:
  - –Two consecutive synchronous writes (burst or single) to the same bank.
  - –A synchronous write (burst or single) access and an asynchronous write or read transfer to or from static memory bank (the bank can be the same or different for the case of read.
  - –Two consecutive synchronous reads (burst or single) followed by any synchronous/asynchronous read or write from/to another static memory bank.
- There is a bus turnaround delay of 3 HCLK clock cycle between:
  - –Two consecutive synchronous writes (burst or single) to different static bank.
  - –A synchronous write (burst or single) access and a synchronous read from the same or a different bank.

0000: BUSTURN phase duration = 0 HCLK clock cycle added

...

1111: BUSTURN phase duration = 15 x HCLK clock cycles added (default value after reset)

Bits 15:8 **DATAST[7:0]:** Data-phase duration

These bits are written by software to define the duration of the data phase (refer to *Figure 38* to *Figure 50*), used in asynchronous accesses:

0000 0000: Reserved

0000 0001: DATAST phase duration = 1 × HCLK clock cycles

0000 0010: DATAST phase duration = 2 × HCLK clock cycles

...

1111 1111: DATAST phase duration = 255 × HCLK clock cycles (default value after reset)

For each memory type and access mode data-phase duration, refer to the respective figure (*Figure 38* to *Figure 50*).

Example: Mode 1, write access, DATAST=1: Data-phase duration= DATAST+1 = 2 HCLK clock cycles.

Note: In synchronous accesses, this value is don't care.

Bits 7:4 **ADDHLD[3:0]:** Address-hold phase duration

These bits are written by software to define the duration of the *address hold* phase (refer to *Figure 38* to *Figure 50*), used in mode D or multiplexed accesses:

0000: Reserved
0001: ADDHLD phase duration =1 × HCLK clock cycle
0010: ADDHLD phase duration = 2 × HCLK clock cycle
...
1111: ADDHLD phase duration = 15 × HCLK clock cycles (default value after reset)

For each access mode address-hold phase duration, refer to the respective figure (*Figure 38* to *Figure 50*).

Note: In synchronous accesses, this value is not used, the address hold phase is always 1 memory clock period duration.

Bits 3:0 **ADDSET[3:0]:** Address setup phase duration

These bits are written by software to define the duration of the *address setup* phase (refer to *Figure 38* to *Figure 50*), used in SRAMs, ROMs, asynchronous NOR Flash and PSRAM:

0000: ADDSET phase duration = 0 × HCLK clock cycle
...
1111: ADDSET phase duration = 15 × HCLK clock cycles (default value after reset)

For each access mode address setup phase duration, refer to the respective figure (*Figure 38* to *Figure 50*).

Note: In synchronous accesses, this value is don't care.
In Muxed mode or mode D, the minimum value for ADDSET is 1.
In mode 1 and PSRAM memory, the minimum value for ADDSET is 1.

Note: PSRAMs (CRAMs) have a variable latency due to internal refresh. Therefore these memories issue the NWAIT signal during the whole latency phase to prolong the latency as needed.
With PSRAMs (CRAMs) the filled DATLAT must be set to 0, so that the FMC exits its latency phase soon and starts sampling NWAIT from memory, then starts to read or write when the memory is ready.
This method can be used also with the latest generation of synchronous Flash memories that issue the NWAIT signal, unlike older Flash memories (check the datasheet of the specific Flash memory being used).

SRAM/NOR-Flash write timing registers x (FMC_BWTRx)

Address offset: 0x104 + 8 * (x – 1), (x = 1 to 4)

Reset value: 0x0FFF FFFF

This register contains the control information of each memory bank. It is used for SRAMs, PSRAMs and NOR Flash memories. When the EXTMOD bit is set in the FMC_BCRx register, then this register is active for write access.

31	30	29	28	27	26	25	24	23	22	21	20	19	18	17	16
Res.	Res.	ACCMOD[1:0]		Res.	Res.	Res.	Res.	Res.	Res.	Res.	Res.	BUSTURN[3:0]			
		rw	rw									rw	rw	rw	rw

15	14	13	12	11	10	9	8	7	6	5	4	3	2	1	0
DATAST[7:0]								ADDHLD[3:0]				ADDSET[3:0]			
rw	rw	rw	rw	rw	rw	rw	rw	rw	rw	rw	rw	rw	rw	rw	rw

Bits 31:30 Reserved, must be kept at reset value.

Bits 29:28 **ACCMOD[1:0]:** Access mode.

Specifies the asynchronous access modes as shown in the next timing diagrams.These bits are taken into account only when the EXTMOD bit in the FMC_BCRx register is 1.

00: Access mode A
01: Access mode B
10: Access mode C
11: Access mode D

Bits 27:20 Reserved, must be kept at reset value.

Bits 19:16 **BUSTURN[3:0]**: Bus turnaround phase duration

The programmed bus turnaround delay is inserted between an asynchronous write transfer and any other asynchronous /synchronous read or write transfer to or from a static bank. The bank can be the same or different in case of read, in case of write the bank can be different expect for muxed or mode D.

In some cases, whatever the programmed BUSTURN values, the bus turnaround delay is fixed as follows:

- The bus turnaround delay is not inserted between two consecutive asynchronous write transfers to the same static memory bank except for muxed and D modes.
- There is a bus turnaround delay of 2 HCLK clock cycle between:
  - –Two consecutive synchronous writes (burst or single) to the same bank.
  - –A synchronous write (burst or single) transfer and an asynchronous write or read transfer to or from static memory bank.
- There is a bus turnaround delay of 3 HCLK clock cycle between:
  - –Two consecutive synchronous writes (burst or single) to different static bank.
  - –A synchronous write (burst or single) transfer and a synchronous read from the same or a different bank.

0000: BUSTURN phase duration = 0 HCLK clock cycle added
...
1111: BUSTURN phase duration = 15 HCLK clock cycles added (default value after reset)

Bits 15:8 **DATAST[7:0]:** Data-phase duration.

These bits are written by software to define the duration of the data phase (refer to *Figure 38* to *Figure 50*), used in asynchronous SRAM, PSRAM and NOR Flash memory accesses:

0000 0000: Reserved
0000 0001: DATAST phase duration = 1 × HCLK clock cycles
0000 0010: DATAST phase duration = 2 × HCLK clock cycles
...
1111 1111: DATAST phase duration = 255 × HCLK clock cycles (default value after reset)

Bits 7:4 **ADDHLD[3:0]:** Address-hold phase duration.

These bits are written by software to define the duration of the *address hold* phase (refer to *Figure 47* to *Figure 50*), used in asynchronous multiplexed accesses:

0000: Reserved
0001: ADDHLD phase duration = 1 × HCLK clock cycle
0010: ADDHLD phase duration = 2 × HCLK clock cycle
...
1111: ADDHLD phase duration = 15 × HCLK clock cycles (default value after reset)

Note: In synchronous NOR Flash accesses, this value is not used, the address hold phase is always 1 Flash clock period duration.

Bits 3:0 **ADDSET[3:0]:** Address setup phase duration.

These bits are written by software to define the duration of the *address setup* phase in HCLK cycles (refer to *Figure 38* to *Figure 50*), used in asynchronous accesses:

0000: ADDSET phase duration = 0 × HCLK clock cycle

...

1111: ADDSET phase duration = 15 × HCLK clock cycles (default value after reset)

Note: In synchronous accesses, this value is not used, the address setup phase is always 1 Flash clock period duration. In muxed mode, the minimum ADDSET value is 1.

16.7 NAND Flash controller

The FMC generates the appropriate signal timings to drive the following types of device:

- 8- and 16-bit NAND Flash memories

The NAND bank is configured through dedicated registers (*Section 16.7.7*). The programmable memory parameters include access timings (shown in *Table 93*) and ECC configuration.

Table 93. Programmable NAND Flash access parameters

Parameter	Function	Access mode	Unit	Min.	Max.
Memory setup time	Number of clock cycles (HCLK) required to set up the address before the command assertion	Read/Write	AHB clock cycle (HCLK)	1	255
Memory wait	Minimum duration (in HCLK clock cycles) of the command assertion	Read/Write	AHB clock cycle (HCLK)	2	255
Memory hold	Number of clock cycles (HCLK) during which the address must be held (as well as the data if a write access is performed) after the command de-assertion	Read/Write	AHB clock cycle (HCLK)	1	254
Memory databus high-Z	Number of clock cycles (HCLK) during which the data bus is kept in high-Z state after a write access has started	Write	AHB clock cycle (HCLK)	1	255

16.7.1 External memory interface signals

The following tables list the signals that are typically used to interface NAND Flash memory.

Note: The prefix "N" identifies the signals which are active low.

8-bit NAND Flash memory

Table 94. 8-bit NAND Flash

FMC signal name	I/O	Function
A[17]	O	NAND Flash address latch enable (ALE) signal
A[16]	O	NAND Flash command latch enable (CLE) signal

Table 94. 8-bit NAND Flash (continued)

FMC signal name	I/O	Function
D[7:0]	I/O	8-bit multiplexed, bidirectional address/data bus
NCE	O	Chip select
NOE(= NRE)	O	Output enable (memory signal name: read enable, NRE)
NWE	O	Write enable
NWAIT/INT	I	NAND Flash ready/busy input signal to the FMC

Theoretically, there is no capacity limitation as the FMC can manage as many address cycles as needed.

16-bit NAND Flash memory

Table 95. 16-bit NAND Flash

FMC signal name	I/O	Function
A[17]	O	NAND Flash address latch enable (ALE) signal
A[16]	O	NAND Flash command latch enable (CLE) signal
D[15:0]	I/O	16-bit multiplexed, bidirectional address/data bus
NCE	O	Chip select
NOE(= NRE)	O	Output enable (memory signal name: read enable, NRE)
NWE	O	Write enable
NWAIT/INT	I	NAND Flash ready/busy input signal to the FMC

Theoretically, there is no capacity limitation as the FMC can manage as many address cycles as needed.

16.7.2 NAND Flash supported memories and transactions

Table 96 shows the supported devices, access modes and transactions. Transactions not allowed (or not supported) by the NAND Flash controller are shown in gray.

Table 96. Supported memories and transactions

Device	Mode	R/W	AHB data size	Memory data size	Allowed/ not allowed	Comments
NAND 8-bit	Asynchronous	R	8	8	Y	-
	Asynchronous	W	8	8	Y	-
	Asynchronous	R	16	8	Y	Split into 2 FMC accesses
	Asynchronous	W	16	8	Y	Split into 2 FMC accesses
	Asynchronous	R	32	8	Y	Split into 4 FMC accesses
	Asynchronous	W	32	8	Y	Split into 4 FMC accesses
NAND 16-bit	Asynchronous	R	8	16	Y	-
	Asynchronous	W	8	16	N	-
	Asynchronous	R	16	16	Y	-
	Asynchronous	W	16	16	Y	-
	Asynchronous	R	32	16	Y	Split into 2 FMC accesses
	Asynchronous	W	32	16	Y	Split into 2 FMC accesses

16.7.3 Timing diagrams for NAND Flash memory

The NAND Flash memory bank is managed through a set of registers:

- Control register: FMC_PCR
- Interrupt status register: FMC_SR
- ECC register: FMC_ECCR
- Timing register for Common memory space: FMC_PMEM
- Timing register for Attribute memory space: FMC_PATT

Each timing configuration register contains three parameters used to define number of HCLK cycles for the three phases of any NAND Flash access, plus one parameter that defines the timing for starting driving the data bus when a write access is performed. *Figure 56* shows the timing parameter definitions for common memory accesses, knowing that Attribute memory space access timings are similar.

Figure 56. NAND Flash controller waveforms for common memory access

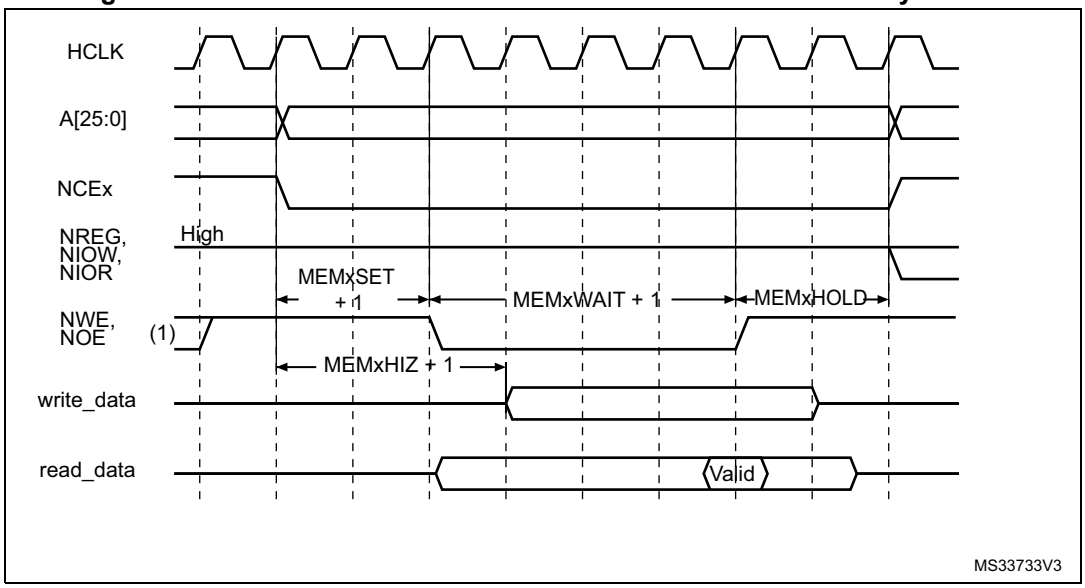

1. NOE remains high (inactive) during write accesses. NWE remains high (inactive) during read accesses.
2. For write access, the hold phase delay is (MEMHOLD) HCLK cycles and for read access is (MEMHOLD + 2) HCLK cycles.

16.7.4 NAND Flash operations

The command latch enable (CLE) and address latch enable (ALE) signals of the NAND Flash memory device are driven by address signals from the FMC controller. This means that to send a command or an address to the NAND Flash memory, the CPU has to perform a write to a specific address in its memory space.

A typical page read operation from the NAND Flash device requires the following steps:

1. Program and enable the corresponding memory bank by configuring the FMC_PCR and FMC_PMEM (and for some devices, FMC_PATT, see *Section 16.7.5: NAND Flash prewait functionality*) registers according to the characteristics of the NAND Flash memory (PWID bits for the data bus width of the NAND Flash, PTYP = 1, PWAITEN = 0 or 1 as needed, see *Section 16.5.2: NAND Flash memory address mapping* for timing configuration).
2. The CPU performs a byte write to the common memory space, with data byte equal to one Flash command byte (for example 0x00 for Samsung NAND Flash devices). The LE input of the NAND Flash memory is active during the write strobe (low pulse on NWE), thus the written byte is interpreted as a command by the NAND Flash memory. Once the command is latched by the memory device, it does not need to be written again for the following page read operations.
3. The CPU can send the start address (STARTAD) for a read operation by writing four bytes (or three for smaller capacity devices), STARTAD[7:0], STARTAD[16:9], STARTAD[24:17] and finally STARTAD[25] (for 64 Mb x 8 bit NAND Flash memories) in the common memory or attribute space. The ALE input of the NAND Flash device is active during the write strobe (low pulse on NWE), thus the written bytes are interpreted as the start address for read operations. Using the attribute memory space makes it possible to use a different timing configuration of the FMC, which can be used

to implement the prewait functionality needed by some NAND Flash memories (see details in *Section 16.7.5: NAND Flash prewait functionality*).

4. The controller waits for the NAND Flash memory to be ready (R/NB signal high), before starting a new access to the same or another memory bank. While waiting, the controller holds the NCE signal active (low).
5. The CPU can then perform byte read operations from the common memory space to read the NAND Flash page (data field + Spare field) byte by byte.
6. The next NAND Flash page can be read without any CPU command or address write operation. This can be done in three different ways:
   – by simply performing the operation described in step 5
   – a new random address can be accessed by restarting the operation at step 3
   – a new command can be sent to the NAND Flash device by restarting at step 2

16.7.5 NAND Flash prewait functionality

Some NAND Flash devices require that, after writing the last part of the address, the controller waits for the R/NB signal to go low. (see *Figure 57*).

Figure 57. Access to non 'CE don't care' NAND-Flash

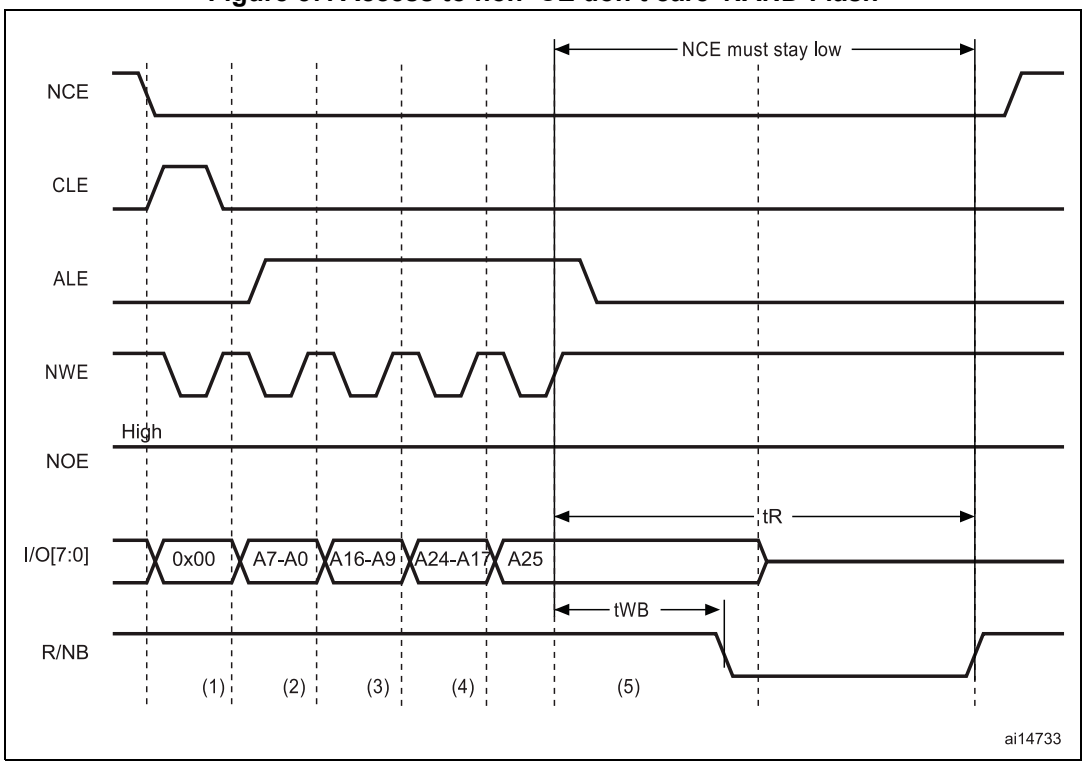

1. CPU wrote byte 0x00 at address 0x7001 0000.
2. CPU wrote byte A7~A0 at address 0x7002 0000.
3. CPU wrote byte A16~A9 at address 0x7002 0000.
4. CPU wrote byte A24~A17 at address 0x7002 0000.
5. CPU wrote byte A25 at address 0x7802 0000: FMC performs a write access using FMC_PATT timing definition, where ATTHOLD ≥ 7 (providing that (7+1) × HCLK = 112 ns > t_{WB} max). This guarantees that NCE remains low until R/NB goes low and high again (only requested for NAND Flash memories where NCE is not don't care).

When this functionality is required, it can be ensured by programming the MEMHOLD value to meet the t_{WB} timing. However any CPU read access to the NAND Flash memory has a hold delay of (MEMHOLD + 2) HCLK cycles and CPU write access has a hold delay of (MEMHOLD) HCLK cycles inserted between the rising edge of the NWE signal and the next access.

To cope with this timing constraint, the attribute memory space can be used by programming its timing register with an ATTHOLD value that meets the t_{WB} timing, and by keeping the MEMHOLD value at its minimum value. The CPU must then use the common memory space for all NAND Flash read and write accesses, except when writing the last address byte to the NAND Flash device, where the CPU must write to the attribute memory space.

16.7.6 Computation of the error correction code (ECC) in NAND Flash memory

The FMC NAND Card controller includes two error correction code computation hardware blocks, one per memory bank. They reduce the host CPU workload when processing the ECC by software.

These two ECC blocks are identical and associated with Bank 2 and Bank 3. As a consequence, no hardware ECC computation is available for memories connected to Bank 4.

The ECC algorithm implemented in the FMC can perform 1-bit error correction and 2-bit error detection per 256, 512, 1 024, 2 048, 4 096 or 8 192 bytes read or written from/to the NAND Flash memory. It is based on the Hamming coding algorithm and consists in calculating the row and column parity.

The ECC modules monitor the NAND Flash data bus and read/write signals (NCE and NWE) each time the NAND Flash memory bank is active.

The ECC operates as follows:

- When accessing NAND Flash memory bank 2 or bank 3, the data present on the D[15:0] bus is latched and used for ECC computation.
- When accessing any other address in NAND Flash memory, the ECC logic is idle, and does not perform any operation. As a result, write operations to define commands or addresses to the NAND Flash memory are not taken into account for ECC computation.

Once the desired number of bytes has been read/written from/to the NAND Flash memory by the host CPU, the FMC_ECCR registers must be read to retrieve the computed value. Once read, they should be cleared by resetting the ECCEN bit to ‘0’. To compute a new data block, the ECCEN bit must be set to one in the FMC_PCR registers.

To perform an ECC computation:

1. Enable the ECCEN bit in the FMC_PCR register.
2. Write data to the NAND Flash memory page. While the NAND page is written, the ECC block computes the ECC value.
3. Read the ECC value available in the FMC_ECCR register and store it in a variable.
4. Clear the ECCEN bit and then enable it in the FMC_PCR register before reading back the written data from the NAND page. While the NAND page is read, the ECC block computes the ECC value.
5. Read the new ECC value available in the FMC_ECCR register.
6. If the two ECC values are the same, no correction is required, otherwise there is an ECC error and the software correction routine returns information on whether the error can be corrected or not.

16.7.7 NAND Flash controller registers

NAND Flash control registers (FMC_PCR)

Address offset: 0x80

Reset value: 0x0000 0018

31	30	29	28	27	26	25	24	23	22	21	20	19	18	17	16
Res.	Res.	Res.	Res.	Res.	Res.	Res.	Res.	Res.	Res.	Res.	Res.	ECCPS[2:0]			TAR3
												rw	rw	rw	rw

15	14	13	12	11	10	9	8	7	6	5	4	3	2	1	0
TAR[2:0]			TCLR[3:0]				Res.	Res.	ECCEN	PWID[1:0]		PTYP	PBKEN	PWAITEN	Res.
rw	rw	rw	rw	rw	rw	rw			rw	rw	rw	rw	rw	rw	

Bits 31:20 Reserved, must be kept at reset value.

Bits 19:17 **ECCPS[2:0]:** ECC page size

Defines the page size for the extended ECC:
000: 256 bytes
001: 512 bytes
010: 1024 bytes
011: 2048 bytes
100: 4096 bytes
101: 8192 bytes

Bits 16:13 **TAR[3:0]:** ALE to RE delay

Sets time from ALE low to RE low in number of AHB clock cycles (HCLK).
Time is: t_ar = (TAR + SET + 2) × THCLK where THCLK is the HCLK clock period
0000: 1 HCLK cycle (default)
1111: 16 HCLK cycles

Note: SET is MEMSET or ATTSET according to the addressed space.

Bits 12:9 **TCLR[3:0]:** CLE to RE delay

Sets time from CLE low to RE low in number of AHB clock cycles (HCLK).
Time is t_clr = (TCLR + SET + 2) × THCLK where THCLK is the HCLK clock period
0000: 1 HCLK cycle (default)
1111: 16 HCLK cycles

Note: SET is MEMSET or ATTSET according to the addressed space.

Bits 8:7 Reserved, must be kept at reset value.

Bit 6 **ECCEN:** ECC computation logic enable bit

0: ECC logic is disabled and reset (default after reset),
1: ECC logic is enabled.

Bits 5:4 **PWID[1:0]:** Data bus width

Defines the external memory device width.
00: 8 bits
01: 16 bits (default after reset).
10: reserved.
11: reserved.

Bit 3 **PTYP:** Memory type

Defines the type of device attached to the corresponding memory bank:
0: Reserved, must be kept at reset value
1: NAND Flash (default after reset)

Bit 2 **PBKEN:** NAND Flash memory bank enable bit

Enables the memory bank. Accessing a disabled memory bank causes an ERROR on AHB bus
0: Corresponding memory bank is disabled (default after reset)
1: Corresponding memory bank is enabled

Bit 1 **PWAITEN:** Wait feature enable bit

Enables the Wait feature for the NAND Flash memory bank:
0: disabled
1: enabled

Bit 0 Reserved, must be kept at reset value.

FIFO status and interrupt register (FMC_SR)

Address offset: 0x84

Reset value: 0x0000 0040

This register contains information about the FIFO status and interrupt. The FMC features a FIFO that is used when writing to memories to transfer up to 16 words of data from the AHB.

This is used to quickly write to the FIFO and free the AHB for transactions to peripherals other than the FMC, while the FMC is draining its FIFO into the memory. One of these register bits indicates the status of the FIFO, for ECC purposes.

The ECC is calculated while the data are written to the memory. To read the correct ECC, the software must consequently wait until the FIFO is empty.

31	30	29	28	27	26	25	24	23	22	21	20	19	18	17	16
Res.	Res.	Res.	Res.	Res.	Res.	Res.	Res.	Res.	Res.	Res.	Res.	Res.	Res.	Res.	Res.

15	14	13	12	11	10	9	8	7	6	5	4	3	2	1	0
Res.	Res.	Res.	Res.	Res.	Res.	Res.	Res.	Res.	FEMPT	IFEN	ILEN	IREN	IFS	ILS	IRS
									r	rw	rw	rw	rw	rw	rw

Bits 31:7 Reserved, must be kept at reset value.

Bit 6 **FEMPT:** FIFO empty

Read-only bit that provides the status of the FIFO
0: FIFO not empty
1: FIFO empty

Bit 5 **IFEN:** Interrupt falling edge detection enable bit

0: Interrupt falling edge detection request disabled
1: Interrupt falling edge detection request enabled

Bit 4 **ILEN:** Interrupt high-level detection enable bit

0: Interrupt high-level detection request disabled
1: Interrupt high-level detection request enabled

Bit 3 **IREN:** Interrupt rising edge detection enable bit

0: Interrupt rising edge detection request disabled
1: Interrupt rising edge detection request enabled

Bit 2 **IFS:** Interrupt falling edge status

The flag is set by hardware and reset by software.
0: No interrupt falling edge occurred
1: Interrupt falling edge occurred

Note: If this bit is written by software to 1 it is set.

Bit 1 **ILS:** Interrupt high-level status

The flag is set by hardware and reset by software.
0: No Interrupt high-level occurred
1: Interrupt high-level occurred

Bit 0 **IRS:** Interrupt rising edge status

The flag is set by hardware and reset by software.

0: No interrupt rising edge occurred

1: Interrupt rising edge occurred

Note: If this bit is written by software to 1 it is set.

Common memory space timing register (FMC_PMEM)

Address offset: Address: 0x88

Reset value: 0xFCFC FCFC

The FMC_PMEM read/write register contains the timing information for NAND Flash memory bank. This information is used to access either the common memory space of the NAND Flash for command, address write access and data read/write access.

31	30	29	28	27	26	25	24	23	22	21	20	19	18	17	16
MEMHIZ[7:0]								MEMHOLD[7:0]							
rw	rw	rw	rw	rw	rw	rw	rw	rw	rw	rw	rw	rw	rw	rw	rw
15	14	13	12	11	10	9	8	7	6	5	4	3	2	1	0
MEMWAIT[7:0]								MEMSET[7:0]							
rw	rw	rw	rw	rw	rw	rw	rw	rw	rw	rw	rw	rw	rw	rw	rw

Bits 31:24 **MEMHIZ[7:0]:** Common memory x data bus Hi-Z time

Defines the number of HCLK clock cycles during which the data bus is kept Hi-Z after the start of a NAND Flash write access to common memory space on socket. This is only valid for write transactions:

0000 0000: 1 HCLK cycle

1111 1110: 255 HCLK cycles

1111 1111: reserved.

Bits 23:16 **MEMHOLD[7:0]:** Common memory hold time

Defines the number of HCLK clock cycles for write access and HCLK (+2) clock cycles for read access during which the address is held (and data for write accesses) after the command is deasserted (NWE, NOE), for NAND Flash read or write access to common memory space on socket x:

0000 0000: reserved.

0000 0001: 1 HCLK cycle for write access / 3 HCLK cycles for read access

1111 1110: 254 HCLK cycles for write access / 256 HCLK cycles for read access

1111 1111: reserved.

Bits 15:8 **MEMWAIT[7:0]:** Common memory wait time

Defines the minimum number of HCLK (+1) clock cycles to assert the command (NWE, NOE), for NAND Flash read or write access to common memory space on socket. The duration of command assertion is extended if the wait signal (NWAIT) is active (low) at the end of the programmed value of HCLK:

0000 0000: reserved

0000 0001: 2HCLK cycles (+ wait cycle introduced by deasserting NWAIT)

1111 1110: 255 HCLK cycles (+ wait cycle introduced by deasserting NWAIT)

1111 1111: reserved.

Bits 7:0 **MEMSET[7:0]:** Common memory x setup time

Defines the number of HCLK (+1) clock cycles to set up the address before the command assertion (NWE, NOE), for NAND Flash read or write access to common memory space on socket x:

0000 0000: 1 HCLK cycle

1111 1110: 255 HCLK cycles

1111 1111: reserved

Attribute memory space timing register (FMC_PATT)

Address offset: 0x8C

Reset value: 0xFCFC FCFC

The FMC_PATT read/write register contains the timing information for NAND Flash memory bank. It is used for 8-bit accesses to the attribute memory space of the NAND Flash for the last address write access if the timing must differ from that of previous accesses (for Ready/Busy management, refer to *Section 16.7.5: NAND Flash prewait functionality*).

31	30	29	28	27	26	25	24	23	22	21	20	19	18	17	16
ATTHIZ[7:0]								ATTHOLD[7:0]							
rw	rw	rw	rw	rw	rw	rw	rw	rw	rw	rw	rw	rw	rw	rw	rw
15	14	13	12	11	10	9	8	7	6	5	4	3	2	1	0
ATTWAIT[7:0]								ATTSET[7:0]							
rw	rw	rw	rw	rw	rw	rw	rw	rw	rw	rw	rw	rw	rw	rw	rw

Bits 31:24 **ATTHIZ[7:0]:** Attribute memory data bus Hi-Z time

Defines the number of HCLK clock cycles during which the data bus is kept in Hi-Z after the start of a NAND Flash write access to attribute memory space on socket. Only valid for writ transaction:

0000 0000: 0 HCLK cycle

1111 1110: 255 HCLK cycles

1111 1111: reserved.

Bits 23:16 **ATTHOLD[7:0]:** Attribute memory hold time

Defines the number of HCLK clock cycles for write access and HCLK (+2) clock cycles for read access during which the address is held (and data for write access) after the command deassertion (NWE, NOE), for NAND Flash read or write access to attribute memory space on socket:

0000 0000: reserved

0000 0001: 1 HCLK cycle for write access / 3 HCLK cycles for read access

1111 1110: 254 HCLK cycles for write access / 256 HCLK cycles for read access

1111 1111: reserved.

Bits 15:8 **ATTWAIT[7:0]:** Attribute memory wait time

Defines the minimum number of HCLK (+1) clock cycles to assert the command (NWE, NOE), for NAND Flash read or write access to attribute memory space on socket x. The duration for command assertion is extended if the wait signal (NWAIT) is active (low) at the end of the programmed value of HCLK:

0000 0000: reserved

0000 0001: 2 HCLK cycles (+ wait cycle introduced by deassertion of NWAIT)

1111 1110: 255 HCLK cycles (+ wait cycle introduced by deasserting NWAIT)

1111 1111: reserved.

Bits 7:0 **ATTSET[7:0]:** Attribute memory setup time

Defines the number of HCLK (+1) clock cycles to set up address before the command assertion (NWE, NOE), for NAND Flash read or write access to attribute memory space on socket:
0000 0000: 1 HCLK cycle
1111 1110: 255 HCLK cycles
1111 1111: reserved.

ECC result registers (FMC_ECCR)

Address offset: 0x94

Reset value: 0x0000 0000

This register contain the current error correction code value computed by the ECC computation modules of the FMC NAND controller. When the CPU reads the data from a NAND Flash memory page at the correct address (refer to *Section 16.7.6: Computation of the error correction code (ECC) in NAND Flash memory*), the data read/written from/to the NAND Flash memory are processed automatically by the ECC computation module. When X bytes have been read (according to the ECCPS field in the FMC_PCR registers), the CPU must read the computed ECC value from the FMC_ECC registers. It then verifies if these computed parity data are the same as the parity value recorded in the spare area, to determine whether a page is valid, and, to correct it otherwise. The FMC_ECCR register should be cleared after being read by setting the ECCEN bit to 0. To compute a new data block, the ECCEN bit must be set to 1.

31	30	29	28	27	26	25	24	23	22	21	20	19	18	17	16
ECC[31:16]															
r	r	r	r	r	r	r	r	r	r	r	r	r	r	r	r
15	14	13	12	11	10	9	8	7	6	5	4	3	2	1	0
ECC[15:0]															
r	r	r	r	r	r	r	r	r	r	r	r	r	r	r	r

Bits 31:0 **ECC[31:0]:** ECC result

This field contains the value computed by the ECC computation logic. *Table 97* describes the contents of these bitfields.

Table 97. ECC result relevant bits

ECCPS[2:0]	Page size in bytes	ECC bits
000	256	ECC[21:0]
001	512	ECC[23:0]
010	1024	ECC[25:0]
011	2048	ECC[27:0]
100	4096	ECC[29:0]
101	8192	ECC[31:0]

16.7.8 FMC register map

Table 98. FMC register map and reset values

Offset	Register	31	30	29	28	27	26	25	24	23	22	21	20	19	18	17	16	15	14	13	12	11	10	9	8	7	6	5	4	3	2	1	0
0x00	**FMC_BCR1**	Res.	Res.	Res.	Res.	Res.	Res.	Res.	Res.	Res.	Res.	WFDIS	CCLKEN	CBURSTRW	CPSIZE [2:0]			ASYNCWAIT	EXTMOD	WAITEN	WREN	WAITCFG	Res.	WAITPOL	BURSTEN	Res.	FACCEN	MWID [1:0]		MTYP [1:0]		MUXEN	MBKEN
	Reset value											0	0	0	0	0	0	0	0	1	1	0		0	0		1	0	1	1	0	1	1
0x08	**FMC_BCR2**	Res.	Res.	Res.	Res.	Res.	Res.	Res.	Res.	Res.	Res.	Res.	Res.	CBURSTRW	CPSIZE [2:0]			ASYNCWAIT	EXTMOD	WAITEN	WREN	WAITCFG	Res.	WAITPOL	BURSTEN	Res.	FACCEN	MWID [1:0]		MTYP [1:0]		MUXEN	MBKEN
	Reset value													0	0	0	0	0	0	1	1	0		0	0		1	0	1	0	0	1	0
0x10	**FMC_BCR3**	Res.	Res.	Res.	Res.	Res.	Res.	Res.	Res.	Res.	Res.	Res.	Res.	CBURSTRW	CPSIZE [2:0]			ASYNCWAIT	EXTMOD	WAITEN	WREN	WAITCFG	Res.	WAITPOL	BURSTEN	Res.	FACCEN	MWID [1:0]		MTYP [1:0]		MUXEN	MBKEN
	Reset value													0	0	0	0	0	0	1	1	0		0	0		1	0	1	0	0	1	0
0x18	**FMC_BCR4**	Res.	Res.	Res.	Res.	Res.	Res.	Res.	Res.	Res.	Res.	Res.	Res.	CBURSTRW	CPSIZE [2:0]			ASYNCWAIT	EXTMOD	WAITEN	WREN	WAITCFG	Res.	WAITPOL	BURSTEN	Res.	FACCEN	MWID [1:0]		MTYP [1:0]		MUXEN	MBKEN
	Reset value													0	0	0	0	0	0	1	1	0		0	0		1	0	1	0	0	1	0
0x04	**FMC_BTR1**	Res.	Res.	ACCMOD[1:0]		DATLAT[3:0]				CLKDIV[3:0]				BUSTURN[3:0]				DATAST[7:0]								ADDHLD[3:0]				ADDSET[3:0]			
	Reset value			0	0	1	1	1	1	1	1	1	1	1	1	1	1	1	1	1	1	1	1	1	1	1	1	1	1	1	1	1	1
0x0C	**FMC_BTR2**	Res.	Res.	ACCMOD[1:0]		DATLAT[3:0]				CLKDIV[3:0]				BUSTURN[3:0]				DATAST[7:0]								ADDHLD[3:0]				ADDSET[3:0]			
	Reset value			0	0	1	1	1	1	1	1	1	1	1	1	1	1	1	1	1	1	1	1	1	1	1	1	1	1	1	1	1	1
0x14	**FMC_BTR3**	Res.	Res.	ACCMOD[1:0]		DATLAT[3:0]				CLKDIV[3:0]				BUSTURN[3:0]				DATAST[7:0]								ADDHLD[3:0]				ADDSET[3:0]			
	Reset value			0	0	1	1	1	1	1	1	1	1	1	1	1	1	1	1	1	1	1	1	1	1	1	1	1	1	1	1	1	1
0x1C	**FMC_BTR4**	Res.	Res.	ACCMOD[1:0]		DATLAT[3:0]				CLKDIV[3:0]				BUSTURN[3:0]				DATAST[7:0]								ADDHLD[3:0]				ADDSET[3:0]			
	Reset value			0	0	1	1	1	1	1	1	1	1	1	1	1	1	1	1	1	1	1	1	1	1	1	1	1	1	1	1	1	1
0x104	**FMC_BWTR1**	Res.	Res.	ACCMOD[1:0]		Res.	Res.	Res.	Res.	Res.	Res.	Res.	Res.	BUSTURN[3:0]				DATAST[7:0]								ADDHLD[3:0]				ADDSET[3:0]			
	Reset value			0	0									1	1	1	1	1	1	1	1	1	1	1	1	1	1	1	1	1	1	1	1
0x10C	**FMC_BWTR2**	Res.	Res.	ACCMOD[1:0]		Res.	Res.	Res.	Res.	Res.	Res.	Res.	Res.	BUSTURN[3:0]				DATAST[7:0]								ADDHLD[3:0]				ADDSET[3:0]			
	Reset value			0	0									1	1	1	1	1	1	1	1	1	1	1	1	1	1	1	1	1	1	1	1

Table 98. FMC register map and reset values (continued)

Offset	Register	31	30	29	28	27	26	25	24	23	22	21	20	19	18	17	16	15	14	13	12	11	10	9	8	7	6	5	4	3	2	1	0
0x114	**FMC_BWTR3**	Res.	Res.	ACCMOD[1:0]		Res.	Res.	Res.	Res.	Res.	Res.	Res.	Res.	BUSTURN[3:0]				DATAST[7:0]								ADDHLD[3:0]				ADDSET[3:0]			
	Reset value			0	0									1	1	1	1	1	1	1	1	1	1	1	1	1	1	1	1	1	1	1	1
0x11C	**FMC_BWTR4**	Res.	Res.	ACCMOD[1:0]		Res.	Res.	Res.	Res.	Res.	Res.	Res.	Res.	BUSTURN[3:0]				DATAST[7:0]								ADDHLD[3:0]				ADDSET[3:0]			
	Reset value			0	0									1	1	1	1	1	1	1	1	1	1	1	1	1	1	1	1	1	1	1	1
0x80	**FMC_PCR**	Res.	Res.	Res.	Res.	Res.	Res.	Res.	Res.	Res.	Res.	Res.	Res.	ECCPS [2:0]				TAR[3:0]			TCLR[3:0]				Res.	Res.	ECCEN	PWID [1:0]		PTYP	PBKEN	PWAITEN	Res.
	Reset value													0	0	0	0	0	0	0	0	0	0	0			0	0	1	1	0	0	
0x84	**FMC_SR**	Res.	Res.	Res.	Res.	Res.	Res.	Res.	Res.	Res.	Res.	Res.	Res.	Res.	Res.	Res.	Res.	Res.	Res.	Res.	Res.	Res.	Res.	Res.	Res.	Res.	FEMPT	IFEN	ILEN	IREN	IFS	ILS	IRS
	Reset value																										1	0	0	0	0	0	0
0x88	**FMC_PMEM**	MEMHIZx[7:0]								MEMHOLDx[7:0]								MEMWAITx[7:0]								MEMSETx[7:0]							
	Reset value	1	1	1	1	1	1	0	0	1	1	1	1	1	1	0	0	1	1	1	1	1	1	0	0	1	1	1	1	1	1	0	0
0x8C	**FMC_PATT**	ATTHIZ[7:0]								ATTHOLD[7:0]								ATTWAIT[7:0]								ATTSET[7:0]							
	Reset value	1	1	1	1	1	1	0	0	1	1	1	1	1	1	0	0	1	1	1	1	1	1	0	0	1	1	1	1	1	1	0	0
0x94	**FMC_ECCR**	ECCx[31:0]																															
	Reset value	0	0	0	0	0	0	0	0	0	0	0	0	0	0	0	0	0	0	0	0	0	0	0	0	0	0	0	0	0	0	0	0

Refer to *Section 2.2 on page 75* for the register boundary addresses.

17 Quad-SPI interface (QUADSPI)

17.1 Introduction

The QUADSPI is a specialized communication interface targeting single, dual or quad SPI Flash memories. It can operate in any of the three following modes:

- indirect mode: all the operations are performed using the QUADSPI registers
- status polling mode: the external Flash memory status register is periodically read and an interrupt can be generated in case of flag setting
- memory-mapped mode: the external Flash memory is mapped to the device address space and is seen by the system as if it was an internal memory

Both throughput and capacity can be increased two-fold using dual-flash mode, where two Quad-SPI Flash memories are accessed simultaneously.

17.2 QUADSPI main features

- Three functional modes: indirect, status-polling, and memory-mapped
- Dual-flash mode, where 8 bits can be sent/received simultaneously by accessing two Flash memories in parallel.
- SDR and DDR support
- Fully programmable opcode for both indirect and memory mapped mode
- Fully programmable frame format for both indirect and memory mapped mode
- Integrated FIFO for reception and transmission
- 8, 16, and 32-bit data accesses are allowed
- DMA channel for indirect mode operations
- Interrupt generation on FIFO threshold, timeout, operation complete, and access error

17.3 QUADSPI implementation

This manual describes the full set of features implemented in QUADSPI peripheral.

The *Table 99* describes the feature differences between microcontroller families.

Table 99. QUADSPI implementation(1)

QUADSPI features	STM32L49x/L4Ax devices	STM32L47x/L48x devices
Dual-flash mode	X	-
DHHC (DDR hold)	X	-

1. X = supported

17.4 QUADSPI functional description

17.4.1 QUADSPI block diagram

Figure 58. QUADSPI block diagram when dual-flash mode is disabled

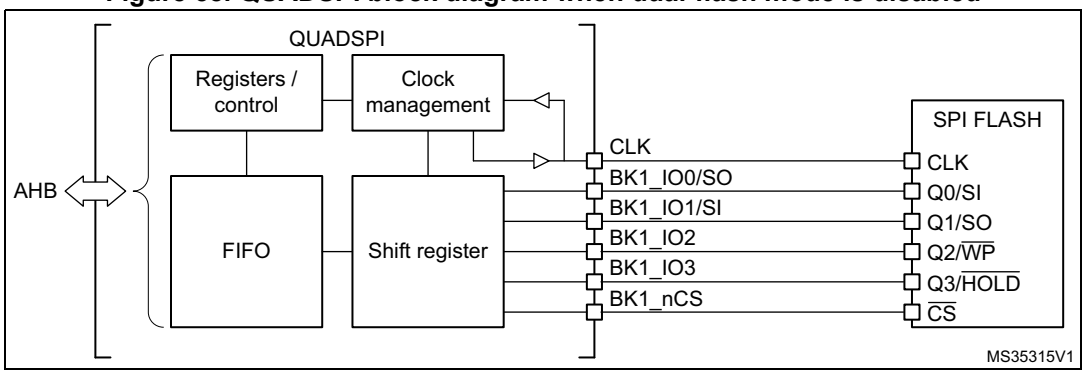

Figure 59. QUADSPI block diagram when dual-flash mode is enabled

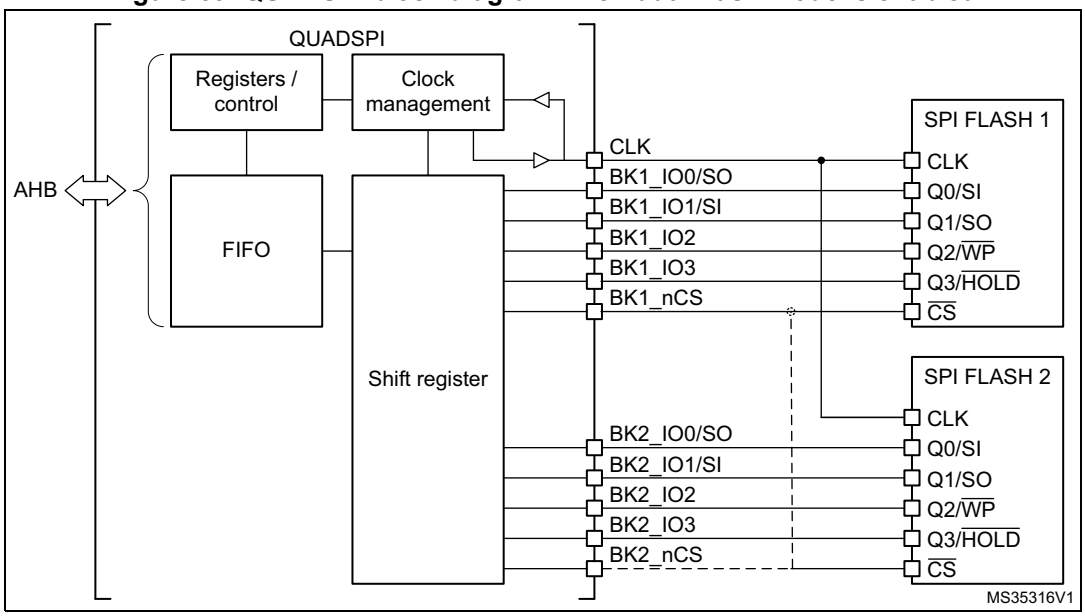

17.4.2 QUADSPI pins

Table 100 lists the QUADSPI pins, six for interfacing with a single Flash memory, or 10 to 11 for interfacing with two Flash memories (FLASH 1 and FLASH 2) in dual-flash mode.

Table 100. QUADSPI pins

Signal name	Signal type	Description
CLK	Digital output	Clock to FLASH 1 and FLASH 2
BK1_IO0/SO	Digital input/output	Bidirectional IO in dual/quad modes or serial output in single mode, for FLASH 1
BK1_IO1/SI	Digital input/output	Bidirectional IO in dual/quad modes or serial input in single mode, for FLASH 1

Table 100. QUADSPI pins (continued)

Signal name	Signal type	Description
BK1_IO2	Digital input/output	Bidirectional IO in quad mode, for FLASH 1
BK1_IO3	Digital input/output	Bidirectional IO in quad mode, for FLASH 1
BK2_IO0/SO	Digital input/output	Bidirectional IO in dual/quad modes or serial output in single mode, for FLASH 2
BK2_IO1/SI	Digital input/output	Bidirectional IO in dual/quad modes or serial input in single mode, for FLASH 2
BK2_IO2	Digital input/output	Bidirectional IO in quad mode, for FLASH 2
BK2_IO3	Digital input/output	Bidirectional IO in quad mode, for FLASH 2
BK1_nCS	Digital output	Chip select (active low) for FLASH 1. Can also be used for FLASH 2 if QUADSPI is always used in dual-flash mode.
BK2_nCS	Digital output	Chip select (active low) for FLASH 2. Can also be used for FLASH 1 if QUADSPI is always used in dual-flash mode.

17.4.3 QUADSPI command sequence

The QUADSPI communicates with the Flash memory using commands. Each command can include 5 phases: instruction, address, alternate byte, dummy, data. Any of these phases can be configured to be skipped, but at least one of the instruction, address, alternate byte, or data phase must be present.

nCS falls before the start of each command and rises again after each command finishes.

Figure 60. An example of a read command in quad mode

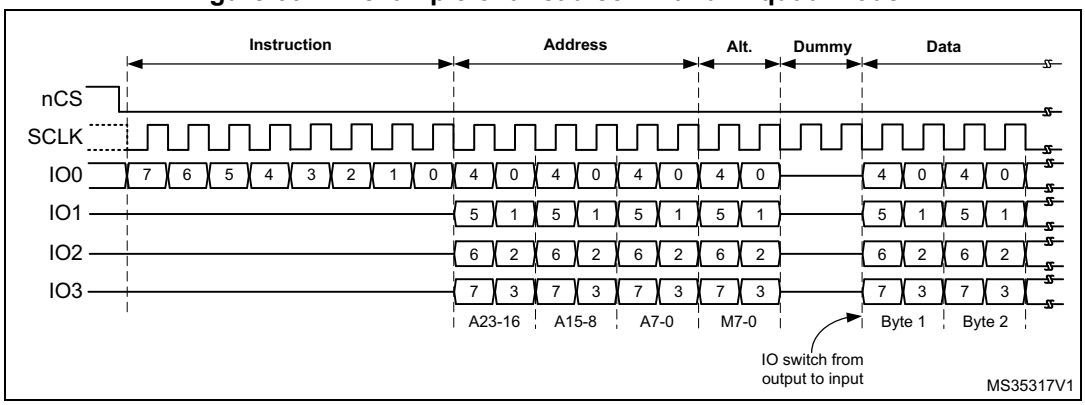

Instruction phase

During this phase, an 8-bit instruction, configured in INSTRUCTION field of QUADSPI_CCR[7:0] register, is sent to the Flash memory, specifying the type of operation to be performed.

Though most Flash memories can receive instructions only one bit at a time from the IO0/SO signal (single SPI mode), the instruction phase can optionally send 2 bits at a time (over IO0/IO1 in dual SPI mode) or 4 bits at a time (over IO0/IO1/IO2/IO3 in quad SPI mode). This can be configured using the IMODE[1:0] field of QUADSPI_CCR[9:8] register.

When IMODE = 00, the instruction phase is skipped, and the command sequence starts with the address phase, if present.

Address phase

In the address phase, 1-4 bytes are sent to the Flash memory to indicate the address of the operation. The number of address bytes to be sent is configured in the ADSIZE[1:0] field of QUADSPI_CCR[13:12] register. In indirect and automatic-polling modes, the address bytes to be sent are specified in the ADDRESS[31:0] field of QUADSPI_AR register, while in memory-mapped mode the address is given directly via the AHB (from the Cortex® or from a DMA).

The address phase can send 1 bit at a time (over SO in single SPI mode), 2 bits at a time (over IO0/IO1 in dual SPI mode), or 4 bits at a time (over IO0/IO1/IO2/IO3 in quad SPI mode). This can be configured using the ADMODE[1:0] field of QUADSPI_CCR[11:10] register.

When ADMODE = 00, the address phase is skipped, and the command sequence proceeds directly to the next phase, if any.

Alternate-bytes phase

In the alternate-bytes phase, 1-4 bytes are sent to the Flash memory, generally to control the mode of operation. The number of alternate bytes to be sent is configured in the ABSIZE[1:0] field of QUADSPI_CCR[17:16] register. The bytes to be sent are specified in the QUADSPI_ABR register.

The alternate-bytes phase can send 1 bit at a time (over SO in single SPI mode), 2 bits at a time (over IO0/IO1 in dual SPI mode), or 4 bits at a time (over IO0/IO1/IO2/IO3 in quad SPI mode). This can be configured using the ABMODE[1:0] field of QUADSPI_CCR[15:14] register.

When ABMODE = 00, the alternate-bytes phase is skipped, and the command sequence proceeds directly to the next phase, if any.

There may be times when only a single nibble needs to be sent during the alternate-byte phase rather than a full byte, such as when dual-mode is used and only two cycles are used for the alternate bytes. In this case, firmware can use quad-mode (ABMODE = 11) and send a byte with bits 7 and 3 of ALTERNATE set to ‘1’ (keeping the IO3 line high), and bits 6 and 2 set to ‘0’ (keeping the IO2 line low). In this case the upper two bits of the nibble to be sent are placed in bits 4:3 of ALTERNATE while the lower two bits are placed in bits 1 and 0. For example, if the nibble 2 (0010) is to be sent over IO0/IO1, then ALTERNATE should be set to 0x8A (1000_1010).

Dummy-cycles phase

In the dummy-cycles phase, 1-31 cycles are given without any data being sent or received, in order to allow the Flash memory the time to prepare for the data phase when higher clock frequencies are used. The number of cycles given during this phase is specified in the DCYC[4:0] field of QUADSPI_CCR[22:18] register. In both SDR and DDR modes, the duration is specified as a number of full CLK cycles.

When DCYC is zero, the dummy-cycles phase is skipped, and the command sequence proceeds directly to the data phase, if present.

The operating mode of the dummy-cycles phase is determined by DMODE.

In order to assure enough “turn-around” time for changing the data signals from output mode to input mode, there must be at least one dummy cycle when using dual or quad mode to receive data from the Flash memory.

Data phase

During the data phase, any number of bytes can be sent to, or received from the Flash memory.

In indirect and automatic-polling modes, the number of bytes to be sent/received is specified in the QUADSPI_DLR register.

In indirect write mode the data to be sent to the Flash memory must be written to the QUADSPI_DR register, while in indirect read mode the data received from the Flash memory is obtained by reading from the QUADSPI_DR register.

In memory-mapped mode, the data which is read is sent back directly over the AHB to the Cortex or to a DMA.

The data phase can send/receive 1 bit at a time (over SO/SI in single SPI mode), 2 bits at a time (over IO0/IO1 in dual SPI mode), or 4 bits at a time (over IO0/IO1/IO2/IO3 in quad SPI mode). This can be configured using the ABMODE[1:0] field of QUADSPI_CCR[15:14] register.

When DMODE = 00, the data phase is skipped, and the command sequence finishes immediately by raising nCS. This configuration must only be used in only indirect write mode.

17.4.4 QUADSPI signal interface protocol modes

Single SPI mode

Legacy SPI mode allows just a single bit to be sent/received serially. In this mode, data is sent to the Flash memory over the SO signal (whose I/O shared with IO0). Data received from the Flash memory arrives via SI (whose I/O shared with IO1).

The different phases can each be configured separately to use this single bit mode by setting the IMODE/ADMODE/ABMODE/DMODE fields (in QUADSPI_CCR) to 01.

In each phase which is configured in single mode:

- IO0 (SO) is in output mode
- IO1 (SI) is in input mode (high impedance)
- IO2 is in output mode and forced to ‘0’ (to deactivate the “write protect” function)
- IO3 is in output mode and forced to ‘1’ (to deactivate the “hold” function)

This is the case even for the dummy phase if DMODE = 01.

Dual SPI mode

In dual SPI mode, two bits are sent/received simultaneously over the IO0/IO1 signals.

The different phases can each be configured separately to use dual SPI mode by setting the IMODE/ADMODE/ABMODE/DMODE fields of QUADSPI_CCR register to 10.

In each phase which is configured in dual mode:

- IO0/IO1 are at high-impedance (input) during the data phase for read operations, and outputs in all other cases
- IO2 is in output mode and forced to ‘0’
- IO3 is in output mode and forced to ‘1’

In the dummy phase when DMODE = 01, IO0/IO1 are always high-impedance.

Quad SPI mode

In quad SPI mode, four bits are sent/received simultaneously over the IO0/IO1/IO2/IO3 signals.

The different phases can each be configured separately to use quad SPI mode by setting the IMODE/ADMODE/ABMODE/DMODE fields of QUADSPI_CCR register to 11.

In each phase which is configured in quad mode, IO0/IO1/IO2/IO3 are all are at high-impedance (input) during the data phase for read operations, and outputs in all other cases.

In the dummy phase when DMODE = 11, IO0/IO1/IO2/IO3 are all high-impedance.

IO2 and IO3 are used only in Quad SPI mode. If none of the phases are configured to use Quad SPI mode, then the pins corresponding to IO2 and IO3 can be used for other functions even while QUADSPI is active.

SDR mode

By default, the DDRM bit (QUADSPI_CCR[31]) is 0 and the QUADSPI operates in single data rate (SDR) mode.

In SDR mode, when the QUADSPI is driving the IO0/SO, IO1, IO2, IO3 signals, these signals transition only with the falling edge of CLK.

When receiving data in SDR mode, the QUADSPI assumes that the Flash memories also send the data using CLK’s falling edge. By default (when SSHIFT = 0), the signals are sampled using the following (rising) edge of CLK.

DDR mode

When the DDRM bit (QUADSPI_CCR[31]) is set to 1, the QUADSPI operates in double data rate (DDR) mode.

In DDR mode, when the QUADSPI is driving the IO0/SO, IO1, IO2, IO3 signals in the address/alternate-byte/data phases, a bit is sent on each of the falling and rising edges of CLK.

The instruction phase is not affected by DDRM. The instruction is always sent using CLK’s falling edge.

When receiving data in DDR mode, the QUADSPI assumes that the Flash memories also send the data using both rising and falling CLK edges. When DDRM = 1, firmware must clear SSHIFT bit (bit 4 of QUADSPI_CR). Thus, the signals are sampled one half of a CLK cycle later (on the following, opposite edge).

Figure 61. An example of a DDR command in quad mode

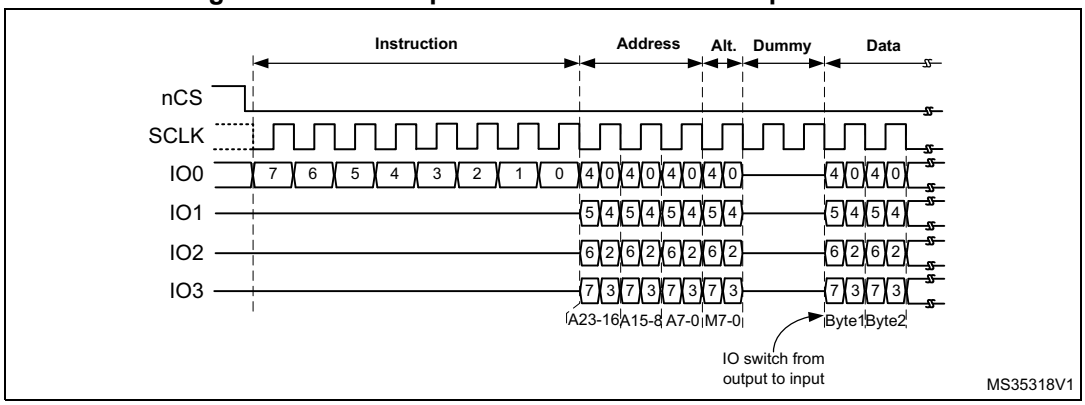

Dual-flash mode

When the DFM bit (bit 6 of QUADSPI_CR) is 1, the QUADSPI is in dual-flash mode, where two external quad SPI Flash memories (FLASH 1 and FLASH 2) are used in order to send/receive 8 bits (or 16 bits in DDR mode) every cycle, effectively doubling the throughput as well as the capacity.

Each of the Flash memories use the same CLK and optionally the same nCS signals, but each have separate IO0, IO1, IO2, and IO3 signals.

Dual-flash mode can be used in conjunction with single-bit, dual-bit, and quad-bit modes, as well as with either SDR or DDR mode.

The Flash memory size, as specified in FSIZE[4:0] (QUADSPI_DCR[20:16]), should reflect the total Flash memory capacity, which is double the size of one individual component.

If address X is even, then the byte which the QUADSPI gives for address X is the byte at the address X/2 of FLASH 1, and the byte which the QUADSPI gives for address X+1 is the byte at the address X/2 of FLASH 2. In other words, bytes at even addresses are all stored in FLASH 1 and bytes at odd addresses are all stored in FLASH 2.

When reading the Flash memories status registers in dual-flash mode, twice as many bytes should be read compared to doing the same read in single-flash mode. This means that if each Flash memory gives 8 valid bits after the instruction for fetching the status register, then the QUADSPI must be configured with a data length of 2 bytes (16 bits), and the QUADSPI will receive one byte from each Flash memory. If each Flash memory gives a status of 16 bits, then the QUADSPI must be configured to read 4 bytes to get all the status bits of both Flash memories in dual-flash mode. The least-significant byte of the result (in the data register) is the least-significant byte of FLASH 1 status register, while the next byte is the least-significant byte of FLASH 2 status register. Then, the third byte of the data register is FLASH 1 second byte, while the forth byte is FLASH 2 second byte (in the case that the Flash memories have 16-bit status registers).

An even number of bytes must always be accessed in dual-flash mode. For this reason, bit 0 of the data length field (QUADSPI_DLR[0]) is stuck at 1 when DRM = 1.

In dual-flash mode, the behavior of FLASH 1 interface signals are basically the same as in normal mode. FLASH 2 interface signals have exactly the same waveforms as FLASH 1 during the instruction, address, alternate-byte, and dummy-cycles phases. In other words, each Flash memory always receives the same instruction and the same address. Then, during the data phase, the BK1_IOx and BK2_IOx buses are both transferring data in

parallel, but the data that are sent to (or received from) FLASH 1 are distinct from those of FLASH 2.

17.4.5 QUADSPI indirect mode

When in indirect mode, commands are started by writing to QUADSPI registers and data is transferred by writing or reading the data register, in the same way as for other communication peripherals.

When FMODE = 00 (QUADSPI_CCR[27:26]), the QUADSPI is in indirect write mode, where bytes are sent to the Flash memory during the data phase. Data are provided by writing to the data register (QUADSPI_DR).

When FMODE = 01, the QUADSPI is in indirect read mode, where bytes are received from the Flash memory during the data phase. Data are recovered by reading QUADSPI_DR.

The number of bytes to be read/written is specified in the data length register (QUADSPI_DLR). If QUADSPI_DLR = 0xFFFF_FFFF (all 1's), then the data length is considered undefined and the QUADSPI simply continues to transfer data until the end of Flash memory (as defined by FSIZE) is reached. If no bytes are to be transferred, DMODE (QUADSPI_CCR[25:24]) should be set to 00.

If QUADSPI_DLR = 0xFFFF_FFFF and FSIZE = 0x1F (max value indicating a 4GB Flash memory), then in this special case the transfers continue indefinitely, stopping only after an abort request or after the QUADSPI is disabled. After the last memory address is read (at address 0xFFFF_FFFF), reading continues with address = 0x0000_0000.

When the programmed number of bytes to be transmitted or received is reached, TCF is set and an interrupt is generated if TCIE = 1. In the case of undefined number of data, the TCF is set when the limit of the external SPI memory is reached according to the Flash memory size defined in the QUADSPI_CR.

Triggering the start of a command

Essentially, a command starts as soon as firmware gives the last information that is necessary for this command. Depending on the QUADSPI configuration, there are three different ways to trigger the start of a command in indirect mode. The commands starts immediately after:

1. a write is performed to INSTRUCTION[7:0] (QUADSPI_CCR), if no address is necessary (when ADMODE = 00) and if no data needs to be provided by the firmware (when FMODE = 01 or DMODE = 00)
2. a write is performed to ADDRESS[31:0] (QUADSPI_AR), if an address is necessary (when ADMODE != 00) and if no data needs to be provided by the firmware (when FMODE = 01 or DMODE = 00)
3. a write is performed to DATA[31:0] (QUADSPI_DR), if an address is necessary (when ADMODE != 00) and if data needs to be provided by the firmware (when FMODE = 00 and DMODE != 00)

Writes to the alternate byte register (QUADSPI_ABR) never trigger the communication start. If alternate bytes are required, they must be programmed before.

As soon as a command is started, the BUSY bit (bit 5 of QUADSPI_SR) is automatically set.

FIFO and data management

In indirect mode, data go through a 16-byte FIFO which is internal to the QUADSPI. FLEVEL[4:0] (QUADSPI_SR[12:8]) indicates how many bytes are currently being held in the FIFO.

In indirect write mode (FMODE = 00), firmware adds data to the FIFO when it writes QUADSPI_DR. Word writes add 4 bytes to the FIFO, halfword writes add 2 bytes, and byte writes add only 1 byte. If firmware adds too many bytes to the FIFO (more than is indicated by DL[31:0]), the extra bytes are flushed from the FIFO at the end of the write operation (when TCF is set).

Byte/halfword accesses to QUADSPI_DR must be done only to the least significant byte/halfword of the 32-bit register.

FTHRES[3:0] is used to define a FIFO threshold. When the threshold is reached, the FTF (FIFO threshold flag) is set. In indirect read mode, FTF is set when the number of valid bytes to be read from the FIFO is above the threshold. FTF is also set if there are data in the FIFO after the last byte is read from the Flash memory, regardless of the FTHRES setting. In indirect write mode, FTF is set when the number of empty bytes in the FIFO is above the threshold.

If FTIE = 1, there is an interrupt when FTF is set. If DMAEN = 1, a DMA transfer is initiated when FTF is set. FTF is cleared by HW as soon as the threshold condition is no longer true (after enough data has been transferred by the CPU or DMA).

In indirect read mode when the FIFO becomes full, the QUADSPI temporarily stops reading bytes from the Flash memory to avoid an overrun. Note that the reading of the Flash memory does not restart until 4 bytes become vacant in the FIFO (when FLEVEL ≤ 11). Thus, when FTHRES ≥ 13, the application must take care to read enough bytes to assure that the QUADSPI starts retrieving data from the Flash memory again. Otherwise, the FTF flag stays at '0' as long as 11 < FLEVEL < FTHRES.

17.4.6 QUADSPI status flag polling mode

In automatic-polling mode, the QUADSPI periodically starts a command to read a defined number of status bytes (up to 4). The received bytes can be masked to isolate some status bits and an interrupt can be generated when the selected bits have a defined value.

The accesses to the Flash memory begin in the same way as in indirect read mode: if no address is required (AMODE = 00), accesses begin as soon as the QUADSPI_CCR is written. Otherwise, if an address is required, the first access begins when QUADSPI_AR is written. BUSY goes high at this point and stays high even between the periodic accesses.

The contents of MASK[31:0] (QUADSPI_PSMAR) are used to mask the data from the Flash memory in automatic-polling mode. If the MASK[n] = 0, then bit n of the result is masked and not considered. If MASK[n] = 1, and the content of bit[n] is the same as MATCH[n] (QUADSPI_PSMAR), then there is a match for bit n.

If the polling match mode bit (PMM, bit 23 of QUADSPI_CR) is 0, then “AND” match mode is activated. This means status match flag (SMF) is set only when there is a match on all of the unmasked bits.

If PMM = 1, then “OR” match mode is activated. This means SMF is set if there is a match on any of the unmasked bits.

An interrupt is called when SMF is set if SMIE = 1.

If the automatic-polling-mode-stop (APMS) bit is set, operation stops and BUSY goes to 0 as soon as a match is detected. Otherwise, BUSY stays at '1' and the periodic accesses continue until there is an abort or the QUADSPI is disabled (EN = 0).

The data register (QUADSPI_DR) contains the latest received status bytes (the FIFO is deactivated). The content of the data register is not affected by the masking used in the matching logic. The FTF status bit is set as soon as a new reading of the status is complete, and FTF is cleared as soon as the data is read.

17.4.7 QUADSPI memory-mapped mode

When configured in memory-mapped mode, the external SPI device is seen as an internal memory.

It is forbidden to access QUADSPI Flash bank area before having properly configured and enabled the QUADSPI peripheral.

No more than 256MB can addressed even if the Flash memory capacity is larger.

If an access is made to an address outside of the range defined by FSIZE but still within the 256MB range, then a bus error is given. The effect of this error depends on the bus master that attempted the access:

- If it is the Cortex® CPU, bus fault exception is generated when enabled (or a hard fault exception when bus fault is disabled)
- If it is a DMA, a DMA transfer error is generated and the corresponding DMA channel is automatically disabled.

Byte, halfword, and word access types are all supported.

Support for execute in place (XIP) operation is implemented, where the QUADSPI anticipates the next access and load in advance the byte at the following address. If the subsequent access is indeed made at a continuous address, the access will be completed faster since the value is already prefetched.

By default, the QUADSPI never stops its prefetch operation, keeping the previous read operation active with nCS maintained low, even if no access to the Flash memory occurs for a long time. Since Flash memories tend to consume more when nCS is held low, the application might want to activate the timeout counter (TCEN = 1, bit 3 of QUADSPI_CR) so that nCS is released after a period of TIMEOUT[15:0] (QUADSPI_LPTR) cycles have elapsed without any access since when the FIFO becomes full with prefetch data.

BUSY goes high as soon as the first memory-mapped access occurs. Because of the prefetch operations, BUSY does not fall until there is a timeout, there is an abort, or the peripheral is disabled.

17.4.8 QUADSPI Flash memory configuration

The device configuration register (QUADSPI_DCR) can be used to specify the characteristics of the external SPI Flash memory.

The FSIZE[4:0] field defines the size of external memory using the following formula:

$$\text{Number of bytes in Flash memory} = 2^{[FSIZE+1]}$$

FSIZE+1 is effectively the number of address bits required to address the Flash memory. The Flash memory capacity can be up to 4GB (addressed using 32 bits) in indirect mode, but the addressable space in memory-mapped mode is limited to 256MB.

If DFM = 1, FSIZE indicates the total capacity of the two Flash memories together.

When the QUADSPI executes two commands, one immediately after the other, it raises the chip select signal (nCS) high between the two commands for only one CLK cycle by default. If the Flash memory requires more time between commands, the chip select high time (CSHT) field can be used to specify the minimum number of CLK cycles (up to 8) that nCS must remain high.

The clock mode (CKMODE) bit indicates the CLK signal logic level in between commands (when nCS = 1).

17.4.9 QUADSPI delayed data sampling

By default, the QUADSPI samples the data driven by the Flash memory one half of a CLK cycle after the Flash memory drives the signal.

In case of external signal delays, it may be beneficial to sample the data later. Using the SSHIFT bit (bit 4 of QUADSPI_CR), the sampling of the data can be shifted by half of a CLK cycle.

Clock shifting is not supported in DDR mode: the SSHIFT bit must be clear when DDRM bit is set.

17.4.10 QUADSPI configuration

The QUADSPI configuration is done in two phases:

- QUADSPI IP configuration
- QUADSPI Flash memory configuration

Once configured and enabled, the QUADSPI can be used in one of its three operating modes: indirect mode, status-polling mode, or memory-mapped mode.

QUADSPI IP configuration

The QUADSPI IP is configured using the QUADSPI_CR. The user shall configure the clock prescaler division factor and the sample shifting settings for the incoming data.

DDR mode can be set through the DDRM bit. Once enabled, the address and the alternate bytes are sent on both clock edges and the data are sent/received on both clock edges. Regardless of the DDRM bit setting, instructions are always sent in SDR mode.

The DMA requests are enabled setting the DMAEN bit. In case of interrupt usage, their respective enable bit can be also set during this phase.

FIFO level for either DMA request generation or interrupt generation is programmed in the FTHRES bits.

If timeout counter is needed, the TCEN bit can be set and the timeout value programmed in the QUADSPI_LPTR register.

Dual-flash mode can be activated by setting DFM to 1.

QUADSPI Flash memory configuration

The parameters related to the targeted external Flash memory are configured through the QUADSPI_DCR register.The user shall program the Flash memory size in the FSIZE bits, the Chip Select minimum high time in the CSHT bits, and the functional mode (Mode 0 or Mode 3) in the MODE bit.

17.4.11 QUADSPI usage

The operating mode is selected using FMODE[1:0] (QUADSPI_CCR[27:26]).

Indirect mode procedure

When FMODE is programmed to 00, indirect write mode is selected and data can be sent to the Flash memory. With FMODE = 01, indirect read mode is selected where data can be read from the Flash memory.

When the QUADSPI is used in indirect mode, the frames are constructed in the following way:

1. Specify a number of data bytes to read or write in the QUADSPI_DLR.
2. Specify the frame format, mode and instruction code in the QUADSPI_CCR.
3. Specify optional alternate byte to be sent right after the address phase in the QUADSPI_ABR.
4. Specify the operating mode in the QUADSPI_CR. If FMODE = 00 (indirect write mode) and DMAEN = 1, then QUADSPI_AR should be specified before QUADSPI_CR, because otherwise QUADSPI_DR might be written by the DMA before QUADSPI_AR is updated (if the DMA controller has already been enabled)
5. Specify the targeted address in the QUADSPI_AR.
6. Read/Write the data from/to the FIFO through the QUADSPI_DR.

When writing the control register (QUADSPI_CR) the user specifies the following settings:

- The enable bit (EN) set to ‘1’
- The DMA enable bit (DMAEN) for transferring data to/from RAM
- Timeout counter enable bit (TCEN)
- Sample shift setting (SSHIFT)
- FIFO threshold level (FTRHES) to indicate when the FTF flag should be set
- Interrupt enables
- Automatic polling mode parameters: match mode and stop mode (valid when FMODE = 11)
- Clock prescaler

When writing the communication configuration register (QUADSPI_CCR) the user specifies the following parameters:

- The instruction byte through the INSTRUCTION bits
- The way the instruction has to be sent through the IMODE bits (1/2/4 lines)
- The way the address has to be sent through the ADMODE bits (None/1/2/4 lines)
- The address size (8/16/24/32-bit) through the ADSIZE bits
- The way the alternate bytes have to be sent through the ABMODE (None/1/2/4 lines)
- The alternate bytes number (1/2/3/4) through the ABSIZE bits
- The presence or not of dummy bytes through the DBMODE bit
- The number of dummy bytes through the DCYC bits
- The way the data have to be sent/received (None/1/2/4 lines) through the DMODE bits

If neither the address register (QUADSPI_AR) nor the data register (QUADSPI_DR) need to be updated for a particular command, then the command sequence starts as soon as

QUADSPI_CCR is written. This is the case when both ADMODE and DMODE are 00, or if just ADMODE = 00 when in indirect read mode (FMODE = 01).

When an address is required (ADMODE is not 00) and the data register does not need to be written (when FMODE = 01 or DMODE = 00), the command sequence starts as soon as the address is updated with a write to QUADSPI_AR.

In case of data transmission (FMODE = 00 and DMODE! = 00), the communication start is triggered by a write in the FIFO through QUADSPI_DR.

Status flag polling mode

The status flag polling mode is enabled setting the FMODE field (QUADSPI_CCR[27:26]) to 10. In this mode, the programmed frame will be sent and the data retrieved periodically.

The maximum amount of data read in each frame is 4 bytes. If more data is requested in QUADSPI_DLR, it will be ignored and only 4 bytes will be read.

The periodicity is specified in the QUADSPI_PISR register.

Once the status data has been retrieved, it can internally be processed i order to:

- set the status match flag and generate an interrupt if enabled
- stop automatically the periodic retrieving of the status bytes

The received value can be masked with the value stored in the QUADSPI_PSMKR and ORed or ANDed with the value stored in the QUADSPI_PSMAR.

In case of match, the status match flag is set and an interrupt is generated if enabled, and the QUADSPI can be automatically stopped if the AMPS bit is set.

In any case, the latest retrieved value is available in the QUADSPI_DR.

Memory-mapped mode

In memory-mapped mode, the external Flash memory is seen as internal memory but with some latency during accesses. Only read operations are allowed to the external Flash memory in this mode.

Memory-mapped mode is entered by setting the FMODE to 11 in the QUADSPI_CCR register.

The programmed instruction and frame is sent when a master is accessing the memory mapped space.

The FIFO is used as a prefetch buffer to anticipate linear reads. Any access to QUADSPI_DR in this mode returns zero.

The data length register (QUADSPI_DLR) has no meaning in memory-mapped mode.

17.4.12 Sending the instruction only once

Some Flash memories (e.g. Winbound) might provide a mode where an instruction must be sent only with the first command sequence, while subsequent commands start directly with the address. One can take advantage of such a feature using the SIOO bit (QUADSPI_CCR[28]).

SIOO is valid for all functional modes (indirect, automatic polling, and memory-mapped). If the SIOO bit is set, the instruction is sent only for the first command following a write to

QUADSPI_CCR. Subsequent command sequences skip the instruction phase, until there is a write to QUADSPI_CCR.

SIOO has no effect when IMODE = 00 (no instruction).

17.4.13 QUADSPI error management

An error can be generated in the following case:

- In indirect mode or status flag polling mode when a wrong address has been programmed in the QUADSPI_AR (according to the Flash memory size defined by FSIZE[4:0] in the QUADSPI_DCR): this will set the TEF and an interrupt is generated if enabled.
- Also in indirect mode, if the address plus the data length exceeds the Flash memory size, TEF will be set as soon as the access is triggered.
- In memory-mapped mode, when an out of range access is done by a master or when the QUADSPI is disabled: this will generate a bus error as a response to the faulty bus master request.
- When a master is accessing the memory mapped space while the memory mapped mode is disabled: this will generate a bus error as a response to the faulty bus master request.

17.4.14 QUADSPI busy bit and abort functionality

Once the QUADSPI starts an operation with the Flash memory, the BUSY bit is automatically set in the QUADSPI_SR.

In indirect mode, the BUSY bit is reset once the QUADSPI has completed the requested command sequence and the FIFO is empty.

In automatic-polling mode, BUSY goes low only after the last periodic access is complete, due to a match when APMS = 1, or due to an abort.

After the first access in memory-mapped mode, BUSY goes low only on a timeout event or on an abort.

Any operation can be aborted by setting the ABORT bit in the QUADSPI_CR. Once the abort is completed, the BUSY bit and the ABORT bit are automatically reset, and the FIFO is flushed.

Note: Some Flash memories might misbehave if a write operation to a status registers is aborted.

17.4.15 nCS behavior

By default, nCS is high, deselecting the external Flash memory. nCS falls before an operation begins and rises as soon as it finishes.

When CKMODE = 0 (“mode0”, where CLK stays low when no operation is in progress) nCS falls one CLK cycle before an operation first rising CLK edge, and nCS rises one CLK cycle after the operation final rising CLK edge, as shown in *Figure 62*.

Figure 62. nCS when CKMODE = 0 (T = CLK period)

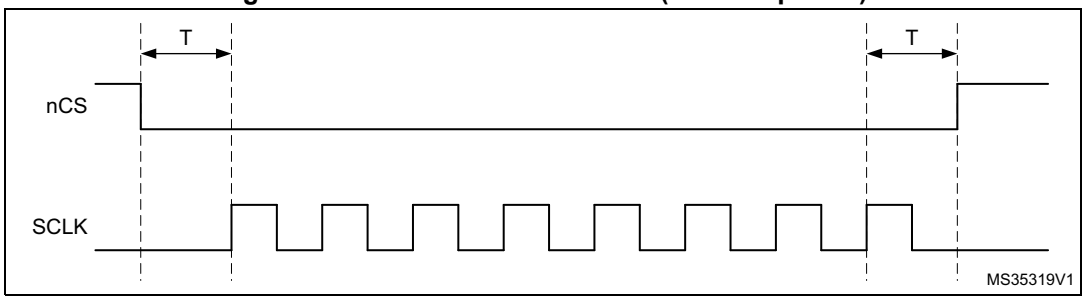

When CKMODE=1 (“mode3”, where CLK goes high when no operation is in progress) and DDRM=0 (SDR mode), nCS still falls one CLK cycle before an operation first rising CLK edge, and nCS rises one CLK cycle after the operation final rising CLK edge, as shown in *Figure 63*.

Figure 63. nCS when CKMODE = 1 in SDR mode (T = CLK period)

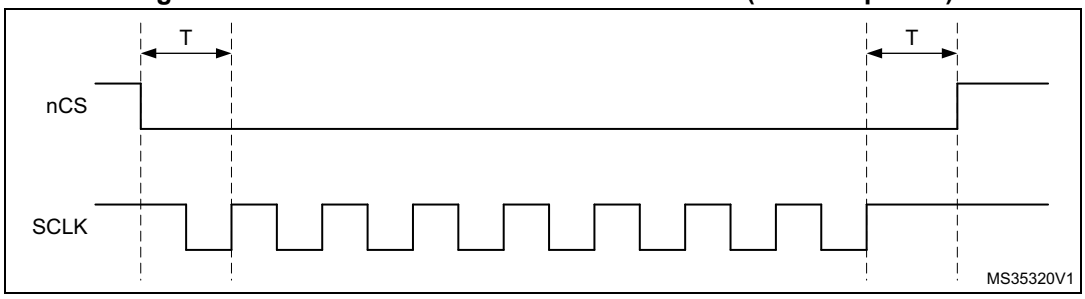

When CKMODE = 1 (“mode3”) and DDRM = 1 (DDR mode), nCS falls one CLK cycle before an operation first rising CLK edge, and nCS rises one CLK cycle after the operation final active rising CLK edge, as shown in *Figure 64*. Because DDR operations must finish with a falling edge, CLK is low when nCS rises, and CLK rises back up one half of a CLK cycle afterwards.

Figure 64. nCS when CKMODE = 1 in DDR mode (T = CLK period)

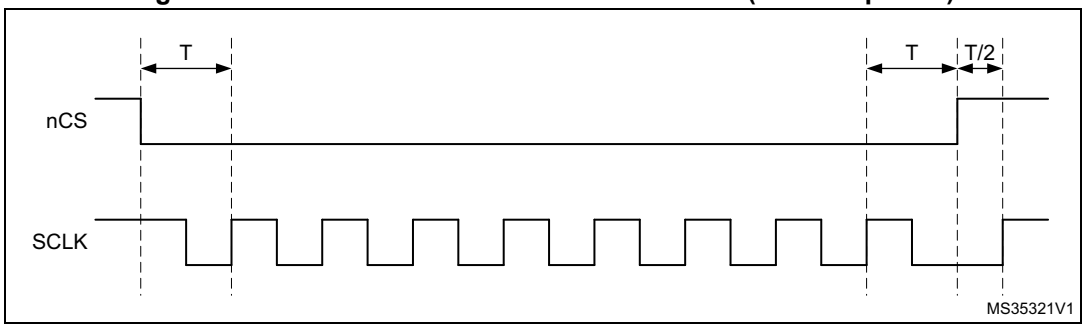

When the FIFO stays full in a read operation or if the FIFO stays empty in a write operation, the operation stalls and CLK stays low until firmware services the FIFO. If an abort occurs when an operation is stalled, nCS rises just after the abort is requested and then CLK rises one half of a CLK cycle later, as shown in *Figure 65*.

Figure 65. nCS when CKMODE = 1 with an abort (T = CLK period)

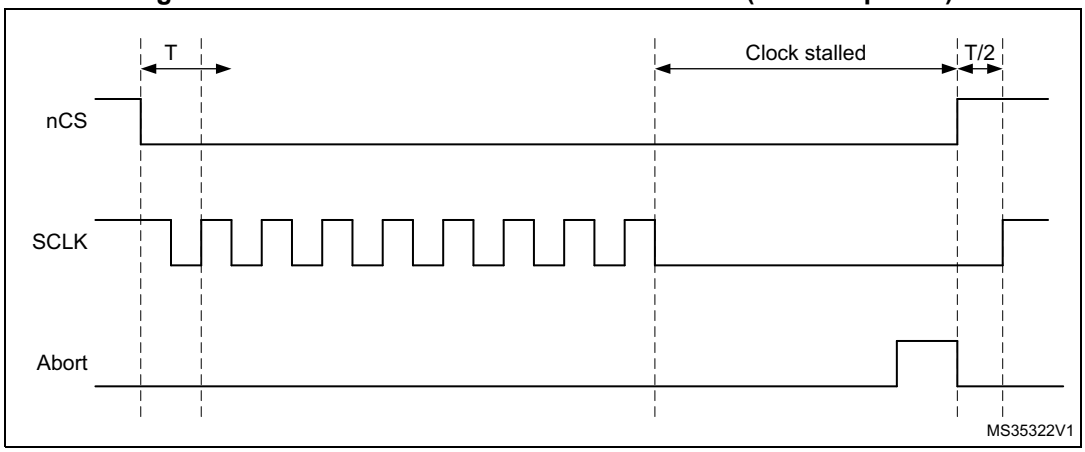

When not in dual-flash mode (DFM = 0), only FLASH 1 is accessed and thus the BK2_nCS stays high. In dual-flash mode, BK2_nCS behaves exactly the same as BK1_nCS. Thus, if there is a FLASH 2 and if the application always stays in dual-flash mode, then FLASH 2 may use BK1_nCS and the pin outputting BK2_nCS can be used for other functions.

17.5 QUADSPI interrupts

An interrupt can be produced on the following events:

- Timeout
- Status match
- FIFO threshold
- Transfer complete
- Transfer error

Separate interrupt enable bits are available for flexibility.

Table 101. QUADSPI interrupt requests

Interrupt event	Event flag	Enable control bit
Timeout	TOF	TOIE
Status match	SMF	SMIE
FIFO threshold	FTF	FTIE
Transfer complete	TCF	TCIE
Transfer error	TEF	TEIE

17.6 QUADSPI registers

17.6.1 QUADSPI control register (QUADSPI_CR)

Address offset: 0x0000

Reset value: 0x0000 0000

31	30	29	28	27	26	25	24	23	22	21	20	19	18	17	16
PRESCALER[7:0]								PMM	APMS	Res.	TOIE	SMIE	FTIE	TCIE	TEIE
rw	rw	rw	rw	rw	rw	rw	rw	rw	rw		rw	rw	rw	rw	rw
15	14	13	12	11	10	9	8	7	6	5	4	3	2	1	0
Res.	Res.	Res.	Res.	FTHRES[3:0]				FSEL	DFM	Res.	SSHIFT	TCEN	DMAEN	ABORT	EN
				rw	rw	rw	rw	rw	rw		rw	rw	rw	rw	rw

Bits 31:24 **PRESCALER[7:0]**: Clock prescaler

This field defines the scaler factor for generating CLK based on the AHB clock (value+1).

0: $F_{CLK} = F_{AHB}$, AHB clock used directly as QUADSPI CLK (prescaler bypassed)

1: $F_{CLK} = F_{AHB}/2$

2: $F_{CLK} = F_{AHB}/3$

...

255: $F_{CLK} = F_{AHB}/256$

For odd clock division factors, CLK's duty cycle is not 50%. The clock signal remains low one cycle longer than it stays high.

This field can be modified only when BUSY = 0.

Bit 23 **PMM**: Polling match mode

This bit indicates which method should be used for determining a "match" during automatic polling mode.

0: AND match mode. SMF is set if all the unmasked bits received from the Flash memory match the corresponding bits in the match register.

1: OR match mode. SMF is set if any one of the unmasked bits received from the Flash memory matches its corresponding bit in the match register.

This bit can be modified only when BUSY = 0.

Bit 22 **APMS**: Automatic poll mode stop

This bit determines if automatic polling is stopped after a match.

0: Automatic polling mode is stopped only by abort or by disabling the QUADSPI.

1: Automatic polling mode stops as soon as there is a match.

This bit can be modified only when BUSY = 0.

Bit 21 Reserved, must be kept at reset value.

Bit 20 **TOIE**: TimeOut interrupt enable

This bit enables the TimeOut interrupt.

0: Interrupt disable

1: Interrupt enabled

Bit 19 **SMIE**: Status match interrupt enable

This bit enables the status match interrupt.

0: Interrupt disable

1: Interrupt enabled

Bit 18 **FTIE**: FIFO threshold interrupt enable

This bit enables the FIFO threshold interrupt.

0: Interrupt disabled

1: Interrupt enabled

Bit 17 **TCIE**: Transfer complete interrupt enable

This bit enables the transfer complete interrupt.

0: Interrupt disabled

1: Interrupt enabled

Bit 16 **TEIE**: Transfer error interrupt enable

This bit enables the transfer error interrupt.

0: Interrupt disable

1: Interrupt enabled

Bits 15:12 Reserved, must be kept at reset value.

Bits 11:8 **FTHRES[3:0]**: FIFO threshold level

Defines, in indirect mode, the threshold number of bytes in the FIFO that will cause the FIFO threshold flag (bit FTF in register QUADSPI_SR) to be set.

0: In indirect write mode (FMODE = 00) FTF is set if there are 1 or more free bytes location left in the FIFO or indirect read mode (FMODE = 01) FTF is set if there are 1 or more valid bytes that can be read from the FIFO

1: In indirect write mode (FMODE = 00) FTF is set if there are 2 or more free bytes location left in the FIFO or indirect read mode (FMODE = 01) FTF is set if there are 2 or more valid bytes that can be read from the FIFO

...

15: In indirect write mode (FMODE = 00) FTF is set if there are 16 free bytes location left in the FIFO or indirect read mode (FMODE = 01) FTF is set if there are 16 valid bytes that can be read from the FIFO

If DMAEN = 1, then the DMA controller for the corresponding channel must be disabled before changing the FTHRES value.

Bit 7 **FSEL**: Flash memory selection

This bit selects the Flash memory to be addressed in single flash mode (when DFM = 0).

0: FLASH 1 selected

1: FLASH 2 selected

This bit can be modified only when BUSY = 0.

This bit is ignored when DFM = 1.

Bit 6 **DFM**: Dual-flash mode

This bit activates dual-flash mode, where two external Flash memories are used simultaneously to double throughput and capacity.

0: Dual-flash mode disabled

1: Dual-flash mode enabled

This bit can be modified only when BUSY = 0.

Bit 5 Reserved, must be kept at reset value.

Bit 4 **SSHIFT**: Sample shift

By default, the QUADSPI samples data 1/2 of a CLK cycle after the data is driven by the Flash memory. This bit allows the data is to be sampled later in order to account for external signal delays.

0: No shift

1: 1/2 cycle shift

Firmware must assure that SSHIFT = 0 when in DDR mode (when DDRM = 1).

This field can be modified only when BUSY = 0.

Bit 3 **TCEN**: Timeout counter enable

This bit is valid only when memory-mapped mode (FMODE = 11) is selected. Activating this bit causes the chip select (nCS) to be released (and thus reduces consumption) if there has not been an access after a certain amount of time, where this time is defined by TIMEOUT[15:0] (QUADSPI_LPTR).

Enable the timeout counter.

By default, the QUADSPI never stops its prefetch operation, keeping the previous read operation active with nCS maintained low, even if no access to the Flash memory occurs for a long time. Since Flash memories tend to consume more when nCS is held low, the application might want to activate the timeout counter (TCEN = 1, bit 3 of QUADSPI_CR) so that nCS is released after a period of TIMEOUT[15:0] (QUADSPI_LPTR) cycles have elapsed without an access since when the FIFO becomes full with prefetch data.

0: Timeout counter is disabled, and thus the chip select (nCS) remains active indefinitely after an access in memory-mapped mode.

1: Timeout counter is enabled, and thus the chip select is released in memory-mapped mode after TIMEOUT[15:0] cycles of Flash memory inactivity.

This bit can be modified only when BUSY = 0.

Bit 2 **DMAEN**: DMA enable

In indirect mode, DMA can be used to input or output data via the QUADSPI_DR register. DMA transfers are initiated when the FIFO threshold flag, FTF, is set.

0: DMA is disabled for indirect mode

1: DMA is enabled for indirect mode

Bit 1 **ABORT**: Abort request

This bit aborts the on-going command sequence. It is automatically reset once the abort is complete.

This bit stops the current transfer.

In polling mode or memory-mapped mode, this bit also reset the APM bit or the DM bit.

0: No abort requested

1: Abort requested

Bit 0 **EN**: Enable

Enable the QUADSPI.

0: QUADSPI is disabled

1: QUADSPI is enabled

17.6.2 QUADSPI device configuration register (QUADSPI_DCR)

Address offset: 0x0004

Reset value: 0x0000 0000

31	30	29	28	27	26	25	24	23	22	21	20	19	18	17	16
Res.	Res.	Res.	Res.	Res.	Res.	Res.	Res.	Res.	Res.	Res.	FSIZE[4:0]				
											rw	rw	rw	rw	rw

15	14	13	12	11	10	9	8	7	6	5	4	3	2	1	0
Res.	Res.	Res.	Res.	Res.	CSHT[2:0]			Res.	Res.	Res.	Res.	Res.	Res.	Res.	CK MODE
					rw	rw	rw								rw

Bits 31:21 Reserved, must be kept at reset value.

Bits 20:16 **FSIZE[4:0]**: Flash memory size

This field defines the size of external memory using the following formula:
Number of bytes in Flash memory = $2^{[FSIZE+1]}$
FSIZE+1 is effectively the number of address bits required to address the Flash memory. The Flash memory capacity can be up to 4GB (addressed using 32 bits) in indirect mode, but the addressable space in memory-mapped mode is limited to 256MB.
If DFM = 1, FSIZE indicates the total capacity of the two Flash memories together.
This field can be modified only when BUSY = 0.

Bits 15:11 Reserved, must be kept at reset value.

Bits 10:8 **CSHT[2:0]**: Chip select high time

CSHT+1 defines the minimum number of CLK cycles which the chip select (nCS) must remain high between commands issued to the Flash memory.
0: nCS stays high for at least 1 cycle between Flash memory commands
1: nCS stays high for at least 2 cycles between Flash memory commands
...
7: nCS stays high for at least 8 cycles between Flash memory commands
This field can be modified only when BUSY = 0.

Bits 7:1 Reserved, must be kept at reset value.

Bit 0 **CKMODE**: Mode 0 / mode 3

This bit indicates the level that CLK takes between commands (when nCS = 1).
0: CLK must stay low while nCS is high (chip select released). This is referred to as mode 0.
1: CLK must stay high while nCS is high (chip select released). This is referred to as mode 3.
This field can be modified only when BUSY = 0.

17.6.3 QUADSPI status register (QUADSPI_SR)

Address offset: 0x0008

Reset value: 0x0000 0000

31	30	29	28	27	26	25	24	23	22	21	20	19	18	17	16
Res.	Res.	Res.	Res.	Res.	Res.	Res.	Res.	Res.	Res.	Res.	Res.	Res.	Res.	Res.	Res.

15	14	13	12	11	10	9	8	7	6	5	4	3	2	1	0
Res.	Res.	Res.	FLEVEL[4:0]					Res.	Res.	BUSY	TOF	SMF	FTF	TCF	TEF
			r	r	r	r	r			r	r	r	r	r	r

Bits 31:13 Reserved, must be kept at reset value.

Bits 12:8 **FLEVEL[4:0]**: FIFO level

This field gives the number of valid bytes which are being held in the FIFO. FLEVEL = 0 when the FIFO is empty, and 16 when it is full. In memory-mapped mode and in automatic status polling mode, FLEVEL is zero.

Bits 7:6 Reserved, must be kept at reset value.

Bit 5 **BUSY**: Busy

This bit is set when an operation is on going. This bit clears automatically when the operation with the Flash memory is finished and the FIFO is empty.

Bit 4 **TOF**: Timeout flag

This bit is set when timeout occurs. It is cleared by writing 1 to CTOF.

Bit 3 **SMF**: Status match flag

This bit is set in automatic polling mode when the unmasked received data matches the corresponding bits in the match register (QUADSPI_PSMAR). It is cleared by writing 1 to CSMF.

Bit 2 **FTF**: FIFO threshold flag

In indirect mode, this bit is set when the FIFO threshold has been reached, or if there is any data left in the FIFO after reads from the Flash memory are complete. It is cleared automatically as soon as threshold condition is no longer true.

In automatic polling mode this bit is set every time the status register is read, and the bit is cleared when the data register is read.

Bit 1 **TCF**: Transfer complete flag

This bit is set in indirect mode when the programmed number of data has been transferred or in any mode when the transfer has been aborted.It is cleared by writing 1 to CTCF.

Bit 0 **TEF**: Transfer error flag

This bit is set in indirect mode when an invalid address is being accessed in indirect mode. It is cleared by writing 1 to CTEF.

17.6.4 QUADSPI flag clear register (QUADSPI_FCR)

Address offset: 0x000C

Reset value: 0x0000 0000

31	30	29	28	27	26	25	24	23	22	21	20	19	18	17	16
Res.	Res.	Res.	Res.	Res.	Res.	Res.	Res.	Res.	Res.	Res.	Res.	Res.	Res.	Res.	Res.

15	14	13	12	11	10	9	8	7	6	5	4	3	2	1	0
Res.	Res.	Res.	Res.	Res.	Res.	Res.	Res.	Res.	Res.	Res.	CTOF	CSMF	Res.	CTCF	CTEF
											w	w		w	w

Bits 31:5 Reserved, must be kept at reset value.

Bit 4 **CTOF**: Clear timeout flag
Writing 1 clears the TOF flag in the QUADSPI_SR register

Bit 3 **CSMF**: Clear status match flag
Writing 1 clears the SMF flag in the QUADSPI_SR register

Bit 2 Reserved, must be kept at reset value.

Bit 1 **CTCF**: Clear transfer complete flag
Writing 1 clears the TCF flag in the QUADSPI_SR register

Bit 0 **CTEF**: Clear transfer error flag
Writing 1 clears the TEF flag in the QUADSPI_SR register

17.6.5 QUADSPI data length register (QUADSPI_DLR)

Address offset: 0x0010

Reset value: 0x0000 0000

31	30	29	28	27	26	25	24	23	22	21	20	19	18	17	16
DL[31:16]															
rw	rw	rw	rw	rw	rw	rw	rw	rw	rw	rw	rw	rw	rw	rw	rw

15	14	13	12	11	10	9	8	7	6	5	4	3	2	1	0
DL[15:0]															
rw	rw	rw	rw	rw	rw	rw	rw	rw	rw	rw	rw	rw	rw	rw	rw

Bits 31:0 **DL[31:0]**: Data length

Number of data to be retrieved (value+1) in indirect and status-polling modes. A value no greater than 3 (indicating 4 bytes) should be used for status-polling mode.
All 1s in indirect mode means undefined length, where QUADSPI will continue until the end of memory, as defined by FSIZE.
0x0000_0000: 1 byte is to be transferred
0x0000_0001: 2 bytes are to be transferred
0x0000_0002: 3 bytes are to be transferred
0x0000_0003: 4 bytes are to be transferred
...
0xFFFF_FFFD: 4,294,967,294 (4G-2) bytes are to be transferred
0xFFFF_FFFE: 4,294,967,295 (4G-1) bytes are to be transferred
0xFFFF_FFFF: undefined length -- all bytes until the end of Flash memory (as defined by FSIZE) are to be transferred. Continue reading indefinitely if FSIZE = 0x1F.
DL[0] is stuck at ‘1’ in dual-flash mode (DFM = 1) even when ‘0’ is written to this bit, thus assuring that each access transfers an even number of bytes.
This field has no effect when in memory-mapped mode (FMODE = 10).
This field can be written only when BUSY = 0.

17.6.6 QUADSPI communication configuration register (QUADSPI_CCR)

Address offset: 0x0014

Reset value: 0x0000 0000

31	30	29	28	27	26	25	24	23	22	21	20	19	18	17	16
DDRM	DHHC	Res.	SIOO	FMODE[1:0]		DMODE[1:0]		Res.	DCYC[4:0]					ABSIZE[1:0]	
rw	rw		rw	rw	rw	rw	rw		rw	rw	rw	rw	rw	rw	rw

15	14	13	12	11	10	9	8	7	6	5	4	3	2	1	0
ABMODE[1:0]		ADSIZE[1:0]		ADMODE[1:0]		IMODE[1:0]		INSTRUCTION[7:0]							
rw	rw	rw	rw	rw	rw	rw	rw	rw	rw	rw	rw	rw	rw	rw	rw

Bit 31 **DDRM**: Double data rate mode

This bit sets the DDR mode for the address, alternate byte and data phase:
0: DDR Mode disabled
1: DDR Mode enabled
This field can be written only when BUSY = 0.

Bit 30 **DHHC**: DDR hold

Delay the data output by 1/4 of the QUADSPI output clock cycle in DDR mode:
0: Delay the data output using analog delay
1: Delay the data output by 1/4 of a QUADSPI output clock cycle.
This feature is only active in DDR mode.
This field can be written only when BUSY = 0.

Note: PRESCALER>0 is mandatory when DHHC=1.

Bit 29 Reserved, must be kept at reset value.

Bit 28 **SIOO**: Send instruction only once mode

See *Section 17.4.12: Sending the instruction only once on page 488*. This bit has no effect when IMODE = 00.

0: Send instruction on every transaction

1: Send instruction only for the first command

This field can be written only when BUSY = 0.

Bits 27:26 **FMODE[1:0]**: Functional mode

This field defines the QUADSPI functional mode of operation.

00: Indirect write mode

01: Indirect read mode

10: Automatic polling mode

11: Memory-mapped mode

If DMAEN = 1 already, then the DMA controller for the corresponding channel must be disabled before changing the FMODE value.

This field can be written only when BUSY = 0.

Bits 25:24 **DMODE[1:0]**: Data mode

This field defines the data phase's mode of operation:

00: No data

01: Data on a single line

10: Data on two lines

11: Data on four lines

This field also determines the dummy phase mode of operation.

This field can be written only when BUSY = 0.

Bit 23 Reserved, must be kept at reset value.

Bits 22:18 **DCYC[4:0]**: Number of dummy cycles

This field defines the duration of the dummy phase. In both SDR and DDR modes, it specifies a number of CLK cycles (0-31).

This field can be written only when BUSY = 0.

Bits 17:16 **ABSIZE[1:0]**: Alternate bytes size

This bit defines alternate bytes size:

00: 8-bit alternate byte

01: 16-bit alternate bytes

10: 24-bit alternate bytes

11: 32-bit alternate bytes

This field can be written only when BUSY = 0.

Bits 15:14 **ABMODE[1:0]**: Alternate bytes mode

This field defines the alternate-bytes phase mode of operation:

00: No alternate bytes

01: Alternate bytes on a single line

10: Alternate bytes on two lines

11: Alternate bytes on four lines

This field can be written only when BUSY = 0.

Bits 13:12 **ADSIZE[1:0]**: Address size
This bit defines address size:
00: 8-bit address
01: 16-bit address
10: 24-bit address
11: 32-bit address
This field can be written only when BUSY = 0.

Bits 11:10 **ADMODE[1:0]**: Address mode
This field defines the address phase mode of operation:
00: No address
01: Address on a single line
10: Address on two lines
11: Address on four lines
This field can be written only when BUSY = 0.

Bits 9:8 **IMODE[1:0]**: Instruction mode
This field defines the instruction phase mode of operation:
00: No instruction
01: Instruction on a single line
10: Instruction on two lines
11: Instruction on four lines
This field can be written only when BUSY = 0.

Bits 7:0 **INSTRUCTION[7:0]**: Instruction
Instruction to be send to the external SPI device.
This field can be written only when BUSY = 0.

17.6.7 QUADSPI address register (QUADSPI_AR)

Address offset: 0x0018

Reset value: 0x0000 0000

31	30	29	28	27	26	25	24	23	22	21	20	19	18	17	16
ADDRESS[31:16]															
rw	rw	rw	rw	rw	rw	rw	rw	rw	rw	rw	rw	rw	rw	rw	rw
15	14	13	12	11	10	9	8	7	6	5	4	3	2	1	0
ADDRESS[15:0]															
rw	rw	rw	rw	rw	rw	rw	rw	rw	rw	rw	rw	rw	rw	rw	rw

Bits 31:0 **ADDRESS[31:0]**: Address
Address to be send to the external Flash memory
Writes to this field are ignored when BUSY = 0 or when FMODE = 11 (memory-mapped mode).
In dual flash mode, ADDRESS[0] is automatically stuck to ‘0’ as the address should always be even

17.6.8 QUADSPI alternate bytes registers (QUADSPI_ABR)

Address offset: 0x001C

Reset value: 0x0000 0000

31	30	29	28	27	26	25	24	23	22	21	20	19	18	17	16
ALTERNATE[31:16]															
rw	rw	rw	rw	rw	rw	rw	rw	rw	rw	rw	rw	rw	rw	rw	rw
15	14	13	12	11	10	9	8	7	6	5	4	3	2	1	0
ALTERNATE[15:0]															
rw	rw	rw	rw	rw	rw	rw	rw	rw	rw	rw	rw	rw	rw	rw	rw

Bits 31:0 **ALTERNATE[31:0]**: Alternate Bytes

Optional data to be send to the external SPI device right after the address.
This field can be written only when BUSY = 0.

17.6.9 QUADSPI data register (QUADSPI_DR)

Address offset: 0x0020

Reset value: 0x0000 0000

31	30	29	28	27	26	25	24	23	22	21	20	19	18	17	16
DATA[31:16]															
rw	rw	rw	rw	rw	rw	rw	rw	rw	rw	rw	rw	rw	rw	rw	rw
15	14	13	12	11	10	9	8	7	6	5	4	3	2	1	0
DATA[15:0]															
rw	rw	rw	rw	rw	rw	rw	rw	rw	rw	rw	rw	rw	rw	rw	rw

Bits 31:0 **DATA[31:0]**: Data

Data to be sent/received to/from the external SPI device.

In indirect write mode, data written to this register is stored on the FIFO before it is sent to the Flash memory during the data phase. If the FIFO is too full, a write operation is stalled until the FIFO has enough space to accept the amount of data being written.

In indirect read mode, reading this register gives (via the FIFO) the data which was received from the Flash memory. If the FIFO does not have as many bytes as requested by the read operation and if BUSY=1, the read operation is stalled until enough data is present or until the transfer is complete, whichever happens first.

In automatic polling mode, this register contains the last data read from the Flash memory (without masking).

Word, halfword, and byte accesses to this register are supported. In indirect write mode, a byte write adds 1 byte to the FIFO, a halfword write 2, and a word write 4. Similarly, in indirect read mode, a byte read removes 1 byte from the FIFO, a halfword read 2, and a word read 4. Accesses in indirect mode must be aligned to the bottom of this register: a byte read must read DATA[7:0] and a halfword read must read DATA[15:0].

17.6.10 QUADSPI polling status mask register (QUADSPI _PSMKR)

Address offset: 0x0024

Reset value: 0x0000 0000

31	30	29	28	27	26	25	24	23	22	21	20	19	18	17	16
MASK[31:16]															
rw	rw	rw	rw	rw	rw	rw	rw	rw	rw	rw	rw	rw	rw	rw	rw
15	14	13	12	11	10	9	8	7	6	5	4	3	2	1	0
MASK[15:0]															
rw	rw	rw	rw	rw	rw	rw	rw	rw	rw	rw	rw	rw	rw	rw	rw

Bits 31:0 **MASK[31:0]**: Status mask

Mask to be applied to the status bytes received in polling mode.

For bit n:

0: Bit n of the data received in automatic polling mode is masked and its value is not considered in the matching logic

1: Bit n of the data received in automatic polling mode is unmasked and its value is considered in the matching logic

This field can be written only when BUSY = 0.

17.6.11 QUADSPI polling status match register (QUADSPI _PSMAR)

Address offset: 0x0028

Reset value: 0x0000 0000

31	30	29	28	27	26	25	24	23	22	21	20	19	18	17	16
MATCH[31:16]															
rw	rw	rw	rw	rw	rw	rw	rw	rw	rw	rw	rw	rw	rw	rw	rw
15	14	13	12	11	10	9	8	7	6	5	4	3	2	1	0
MATCH[15:0]															
rw	rw	rw	rw	rw	rw	rw	rw	rw	rw	rw	rw	rw	rw	rw	rw

Bits 31:0 **MATCH[31:0]**: Status match

Value to be compared with the masked status register to get a match.

This field can be written only when BUSY = 0.

17.6.12 QUADSPI polling interval register (QUADSPI _PIR)

Address offset: 0x002C

Reset value: 0x0000 0000

31	30	29	28	27	26	25	24	23	22	21	20	19	18	17	16
Res.	Res.	Res.	Res.	Res.	Res.	Res.	Res.	Res.	Res.	Res.	Res.	Res.	Res.	Res.	Res.

15	14	13	12	11	10	9	8	7	6	5	4	3	2	1	0
INTERVAL[15:0]															
rw	rw	rw	rw	rw	rw	rw	rw	rw	rw	rw	rw	rw	rw	rw	rw

Bits 31:16 Reserved, must be kept at reset value.

Bits 15:0 **INTERVAL[15:0]**: Polling interval

Number of CLK cycles between to read during automatic polling phases.
This field can be written only when BUSY = 0.

17.6.13 QUADSPI low-power timeout register (QUADSPI_LPTR)

Address offset: 0x0030

Reset value: 0x0000 0000

31	30	29	28	27	26	25	24	23	22	21	20	19	18	17	16
Res.	Res.	Res.	Res.	Res.	Res.	Res.	Res.	Res.	Res.	Res.	Res.	Res.	Res.	Res.	Res.

15	14	13	12	11	10	9	8	7	6	5	4	3	2	1	0
TIMEOUT[15:0]															
rw	rw	rw	rw	rw	rw	rw	rw	rw	rw	rw	rw	rw	rw	rw	rw

Bits 31:16 Reserved, must be kept at reset value.

Bits 15:0 **TIMEOUT[15:0]**: Timeout period

After each access in memory-mapped mode, the QUADSPI prefetches the subsequent bytes and holds these bytes in the FIFO. This field indicates how many CLK cycles the QUADSPI waits after the FIFO becomes full until it raises nCS, putting the Flash memory in a lower-consumption state.
This field can be written only when BUSY = 0.

17.6.14 QUADSPI register map

Table 102. QUADSPI register map and reset values

Offset	Register name	31	30	29	28	27	26	25	24	23	22	21	20	19	18	17	16	15	14	13	12	11	10	9	8	7	6	5	4	3	2	1	0
0x0000	**QUADSPI_CR**	PRESCALER[7:0]								PMM	APMS	Res.	TOIE	SMIE	FTIE	TCIE	TEIE	Res.	Res.	Res.	Res.	FTHRES [3:0]				FSEL	DFM	Res.	SSHIFT	TCEN	DMAEN	ABORT	EN
	Reset value	0	0	0	0	0	0	0	0	0	0		0	0	0	0	0					0	0	0	0	0	0		0	0	0	0	0
0x0004	**QUADSPI_DCR**	Res.	Res.	Res.	Res.	Res.	Res.	Res.	Res.	Res.	Res.	Res.	FSIZE[4:0]					Res.	Res.	Res.	Res.	Res.	CSHT			Res.	Res.	Res.	Res.	Res.	Res.	Res.	CKMODE
	Reset value												0	0	0	0	0						0	0	0								0
0x0008	**QUADSPI_SR**	Res.	Res.	Res.	Res.	Res.	Res.	Res.	Res.	Res.	Res.	Res.	Res.	Res.	Res.	Res.	Res.	Res.	Res.	FLEVEL[5:0]						Res.	Res.	BUS	TOF	SMF	FTF	TCF	TEF
	Reset value																			0	0	0	0	0	0			0	0	0	0	0	0
0x000C	**QUADSPI_FCR**	Res.	Res.	Res.	Res.	Res.	Res.	Res.	Res.	Res.	Res.	Res.	Res.	Res.	Res.	Res.	Res.	Res.	Res.	Res.	Res.	Res.	Res.	Res.	Res.	Res.	Res.	Res.	CTOF	CSMF	Res.	CTCF	CTEF
	Reset value																												0	0		0	0
0x0010	**QUADSPI_DLR**	DL[31:0]																															
	Reset value	0	0	0	0	0	0	0	0	0	0	0	0	0	0	0	0	0	0	0	0	0	0	0	0	0	0	0	0	0	0	0	0
0x0014	**QUADSPI_CCR**	DDRM	DHHC	Res.	SIOO	FMODE[1:0]		DMODE[1:0]		Res.	DCYC[4:0]					ABSIZE[1:0]		ABMODE[1:0]		ADSIZE[1:0]		ADMODE[1:0]		IMODE[1:0]		INSTRUCTION[7:0]							
	Reset value	0	0		0	0	0	0	0		0	0	0	0	0	0	0	0	0	0	0	0	0	0	0	0	0	0	0	0	0	0	0
0x0018	**QUADSPI_AR**	ADDRESS[31:0]																															
	Reset value	0	0	0	0	0	0	0	0	0	0	0	0	0	0	0	0	0	0	0	0	0	0	0	0	0	0	0	0	0	0	0	0
0x001C	**QUADSPI_ABR**	ALTERNATE[31:0]																															
	Reset value	0	0	0	0	0	0	0	0	0	0	0	0	0	0	0	0	0	0	0	0	0	0	0	0	0	0	0	0	0	0	0	0
0x0020	**QUADSPI_DR**	DATA[31:0]																															
	Reset value	0	0	0	0	0	0	0	0	0	0	0	0	0	0	0	0	0	0	0	0	0	0	0	0	0	0	0	0	0	0	0	0
0x0024	**QUADSPI_ PSMKR**	MASK[31:0]																															
	Reset value	0	0	0	0	0	0	0	0	0	0	0	0	0	0	0	0	0	0	0	0	0	0	0	0	0	0	0	0	0	0	0	0
0x0028	**QUADSPI_ PSMAR**	MATCH[31:0]																															
	Reset value	0	0	0	0	0	0	0	0	0	0	0	0	0	0	0	0	0	0	0	0	0	0	0	0	0	0	0	0	0	0	0	0
0x002C	**QUADSPI_PIR**	Res.	Res.	Res.	Res.	Res.	Res.	Res.	Res.	Res.	Res.	Res.	Res.	Res.	Res.	Res.	Res.	INTERVAL[15:0]															
	Reset value																	0	0	0	0	0	0	0	0	0	0	0	0	0	0	0	0
0x0030	**QUADSPI_ LPTR**	Res.	Res.	Res.	Res.	Res.	Res.	Res.	Res.	Res.	Res.	Res.	Res.	Res.	Res.	Res.	Res.	TIMEOUT[15:0]															
	Reset value																	0	0	0	0	0	0	0	0	0	0	0	0	0	0	0	0

Refer to *Section 2.2 on page 75* for the register boundary addresses.

18 Analog-to-digital converters (ADC)

18.1 Introduction

This section describes the implementation of up to 3 ADCs:

- ADC1 and ADC2 are tightly coupled and can operate in dual mode (ADC1 is master).
- ADC3 is controlled independently.

Each ADC consists of a 12-bit successive approximation analog-to-digital converter.

Each ADC has up to 20 multiplexed channels. A/D conversion of the various channels can be performed in single, continuous, scan or discontinuous mode. The result of the ADC is stored in a left-aligned or right-aligned 16-bit data register.

The ADCs are mapped on the AHB bus to allow fast data handling.

The analog watchdog features allow the application to detect if the input voltage goes outside the user-defined high or low thresholds.

A built-in hardware oversampler allows to improve analog performances while off-loading the related computational burden from the CPU.

An efficient low-power mode is implemented to allow very low consumption at low frequency.

18.2 ADC main features

- High-performance features
  - Up to 3 ADCs, out of which two of them can operate in dual mode:
    ADC1 is connected to 16 external channels + 3 internal channels
    ADC2 is connected to 16 external channels + 2 internal channels
    ADC3 is connected to 12 external channels + 4 internal channels
  - 12, 10, 8 or 6-bit configurable resolution
  - ADC conversion time is independent from the AHB bus clock frequency
  - Faster conversion time by lowering resolution
  - Manage single-ended or differential inputs
  - AHB slave bus interface to allow fast data handling
  - Self-calibration
  - Channel-wise programmable sampling time
  - Up to four injected channels (analog inputs assignment to regular or injected channels is fully configurable)
  - Hardware assistant to prepare the context of the injected channels to allow fast context switching
  - Data alignment with in-built data coherency
  - Data can be managed by DMA for regular channel conversions
  - Data can be routed to DFSDM for post processing
  - 4 dedicated data registers for the injected channels
- Oversampler
  - 16-bit data register
  - Oversampling ratio adjustable from 2 to 256
  - Programmable data shift up to 8-bit

- Low-power features
  - Speed adaptive low-power mode to reduce ADC consumption when operating at low frequency
  - Allows slow bus frequency application while keeping optimum ADC performance
  - Provides automatic control to avoid ADC overrun in low AHB bus clock frequency application (auto-delayed mode)
- Number of external analog input channels per ADC
  - Up to 5 fast channels from GPIO pads
  - Up to 11 slow channels from GPIO pads
- In addition, there are several internal dedicated channels
  - The internal reference voltage (V_{REFINT}), connected to ADC1
  - The internal temperature sensor (V_{TS}), connected to ADC1 and ADC3
  - The V_{BAT} monitoring channel ($V_{BAT}/3$), connected to ADC1 and ADC3
  - DAC1 internal channels, connected to ADC2 and ADC3
- Start-of-conversion can be initiated:
  - By software for both regular and injected conversions
  - By hardware triggers with configurable polarity (internal timers events or GPIO input events) for both regular and injected conversions
- Conversion modes
  - Each ADC can convert a single channel or can scan a sequence of channels
  - Single mode converts selected inputs once per trigger
  - Continuous mode converts selected inputs continuously
  - Discontinuous mode
- Dual ADC mode for ADC1 and 2
- Interrupt generation at ADC ready, the end of sampling, the end of conversion (regular or injected), end of sequence conversion (regular or injected), analog watchdog 1, 2 or 3 or overrun events
- 3 analog watchdogs per ADC
- ADC input range: $V_{REF-} \leq V_{IN} \leq V_{REF+}$

Figure 66 shows the block diagram of one ADC.

18.3 ADC implementation

Table 103. Main ADC features

References	ADC1	ADC2	ADC3
Dual mode	X	X	X
DFSDM interface(1)	X	X	X
SMPPLUS control(1)	X	X	X

1. Available only on STM32L49x/STM32L4Ax.

18.4 ADC functional description

18.4.1 ADC block diagram

Figure 66 shows the ADC block diagram and *Table 105* gives the ADC pin description.

Figure 66. ADC block diagram

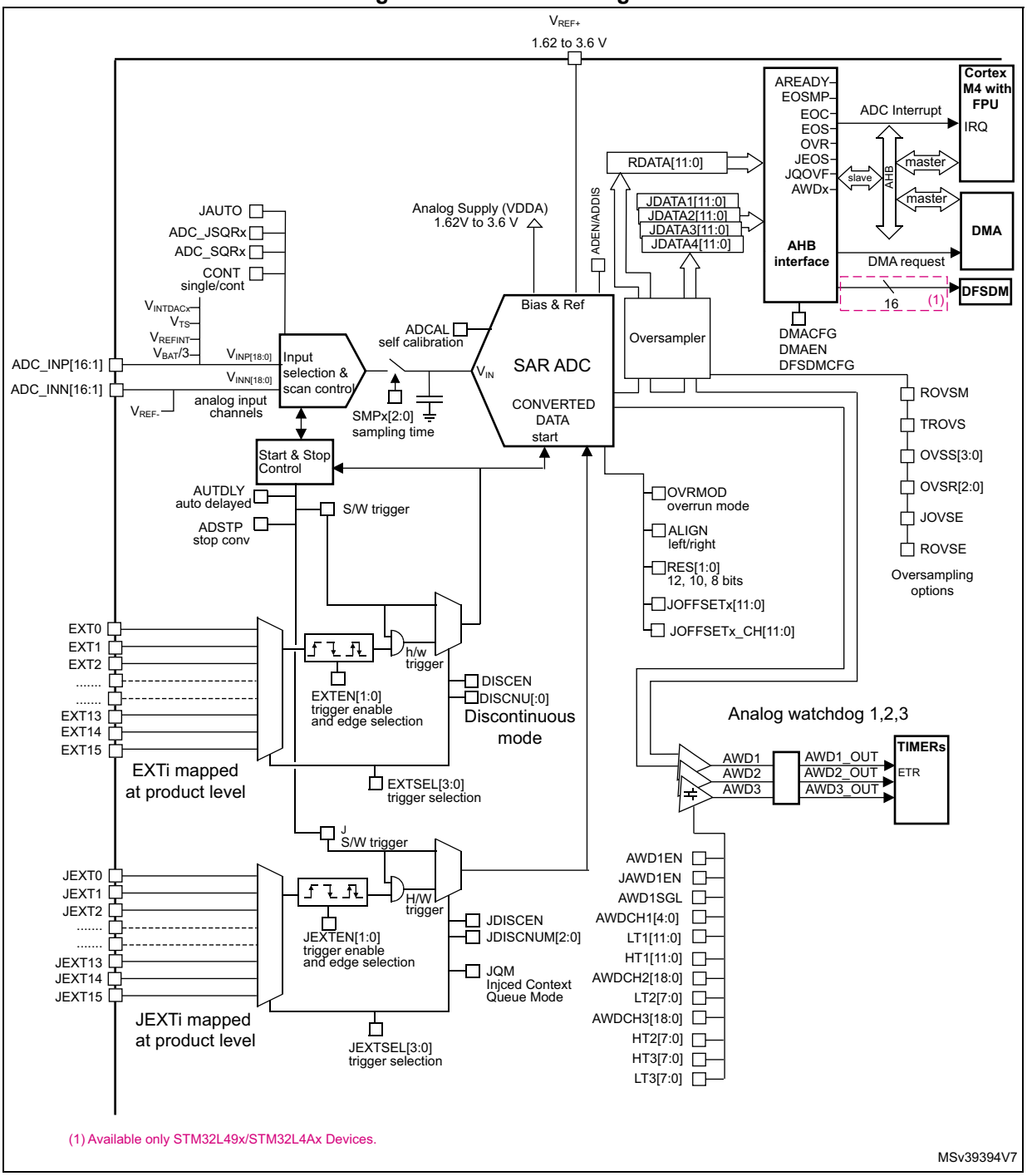

18.4.2 ADC pins and internal signals

Table 104. ADC internal input/output signals

Internal signal name	Signal type	Description
EXT[15:0]	Inputs	Up to 16 external trigger inputs for the regular conversions (can be connected to on-chip timers). These inputs are shared between the ADC master and the ADC slave.
JEXT[15:0]	Inputs	Up to 16 external trigger inputs for the injected conversions (can be connected to on-chip timers). These inputs are shared between the ADC master and the ADC slave.
ADC_AWDx_OUT	Output	Internal analog watchdog output signal connected to on-chip timers. (x = Analog watchdog number 1,2,3)
V_{TS}	Input	Output voltage from internal temperature sensor
V_{REFINT}	Input	Output voltage from internal reference voltage
V_{BAT}	Input supply	External battery voltage supply

Table 105. ADC input/output pins

Pin name	Signal type	Comments
VREF+	Input, analog reference positive	The higher/positive reference voltage for the ADC, $1.62\ V \le V_{REF+} \le V_{DDA}$
VDDA	Input, analog supply	Analog power supply equal V_{DDA}: $1.62\ V \le V_{DDA} \le 3.6\ V$
VREF−	Input, analog reference negative	The lower/negative reference voltage for the ADC. V_{REF-} is internally connected to V_{SSA}
VSSA	Input, analog supply ground	Ground for analog power supply. On device package which do not have a dedicated V_{SSA} pin, V_{SSA} is internally connected to V_{SS}.
$V_{INP}i$	Positive analog input channels for each ADC	Connected either to ADCx_INP*i* external channels or to internal channels.
$V_{INN}i$	Negative analog input channels for each ADC	Connected either to V_{REF-} or to external channels: ADCx_INNi and ADCx_INP[i+1].
ADCx_INNi	Negative external analog input signals	Up to 16 analog input channels (x = ADC number = 1,2 or 3) Refer to *Section 18.4.4: ADC1/2/3 connectivity* for details.
ADCx_INPi	Positive external analog input signals	Up to 10 analog input channels (x = ADC number = 1,2 or 3) Refer to *Section 18.4.4: ADC1/2/3 connectivity* for details

18.4.3 ADC clocks

Dual clock domain architecture

The dual clock-domain architecture means that the ADC clock is independent from the AHB bus clock.

The input clock is the same for all ADCs and can be selected between two different clock sources (see *Figure 67: ADC clock scheme*):

1. The ADC clock can be a specific clock source, derived from the following clock sources:
   - The system clock
   - PLLSAI1 (single ADC implementation)
   - PLLSAI2

   Refer to RCC Section for more information on how to generate ADC dedicated clock. To select this scheme, bits CKMODE[1:0] of the ADCx_CCR register must be reset.
2. The ADC clock can be derived from the AHB clock of the ADC bus interface, divided by a programmable factor (1, 2 or 4). In this mode, a programmable divider factor can be selected (/1, 2 or 4 according to bits CKMODE[1:0]).

   To select this scheme, bits CKMODE[1:0] of the ADCx_CCR register must be different from “00”.

Note: For option 2), a prescaling factor of 1 (CKMODE[1:0]=01) can be used only if the AHB prescaler is set to 1 (HPRE[3:0] = 0xxx in RCC_CFGR register).

Option 1) has the advantage of reaching the maximum ADC clock frequency whatever the AHB clock scheme selected. The ADC clock can eventually be divided by the following ratio: 1, 2, 4, 6, 8, 12, 16, 32, 64, 128, 256; using the prescaler configured with bits PRESC[3:0] in the ADCx_CCR register.

Option 2) has the advantage of bypassing the clock domain resynchronizations. This can be useful when the ADC is triggered by a timer and if the application requires that the ADC is precisely triggered without any uncertainty (otherwise, an uncertainty of the trigger instant is added by the resynchronizations between the two clock domains).

Figure 67. ADC clock scheme

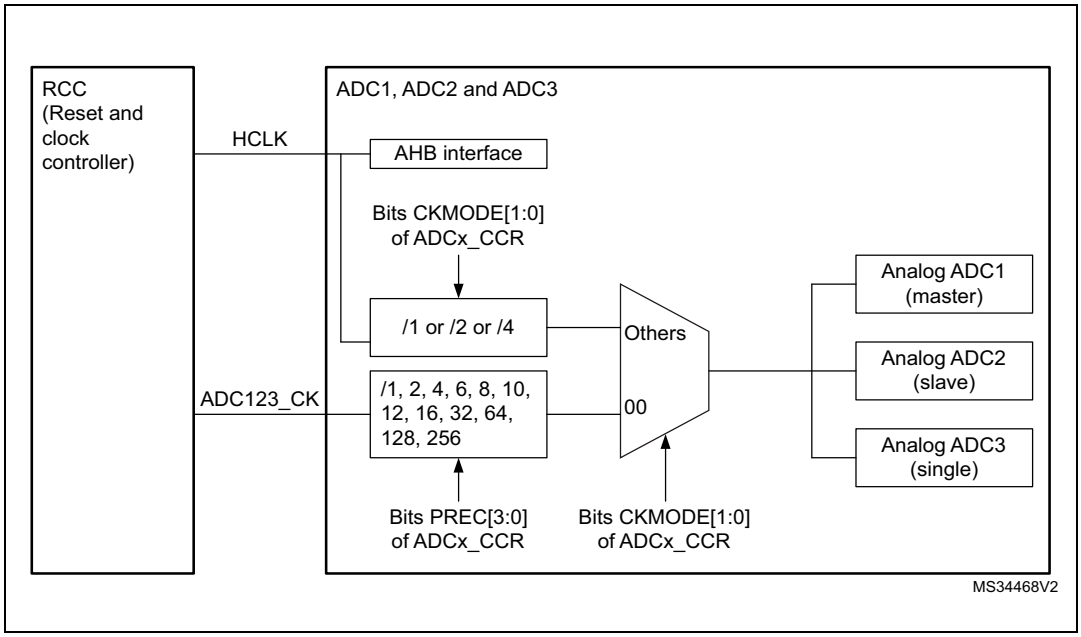

Clock ratio constraint between ADC clock and AHB clock

There are generally no constraints to be respected for the ratio between the ADC clock and the AHB clock except if some injected channels are programmed. In this case, it is mandatory to respect the following ratio:

- F_{HCLK} >= F_{ADC} / 4 if the resolution of all channels are 12-bit or 10-bit
- F_{HCLK} >= F_{ADC} / 3 if there are some channels with resolutions equal to 8-bit (and none with lower resolutions)
- F_{HCLK} >= F_{ADC} / 2 if there are some channels with resolutions equal to 6-bit

18.4.4 ADC1/2/3 connectivity

ADC1, ADC2 and ADC3 are tightly coupled and share some external channels as described in the below figures.

Figure 68. ADC1 connectivity

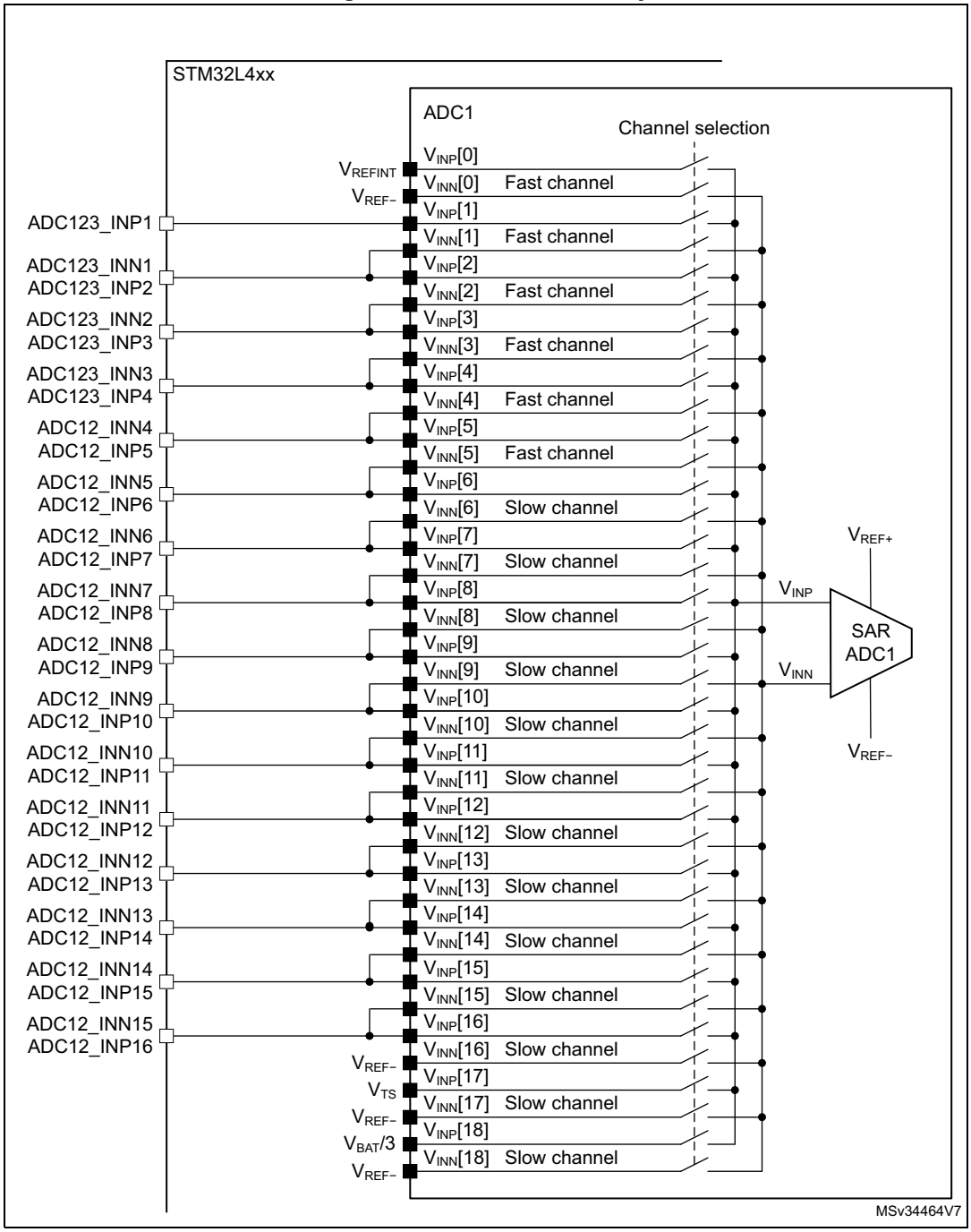

Figure 69. ADC2 connectivity

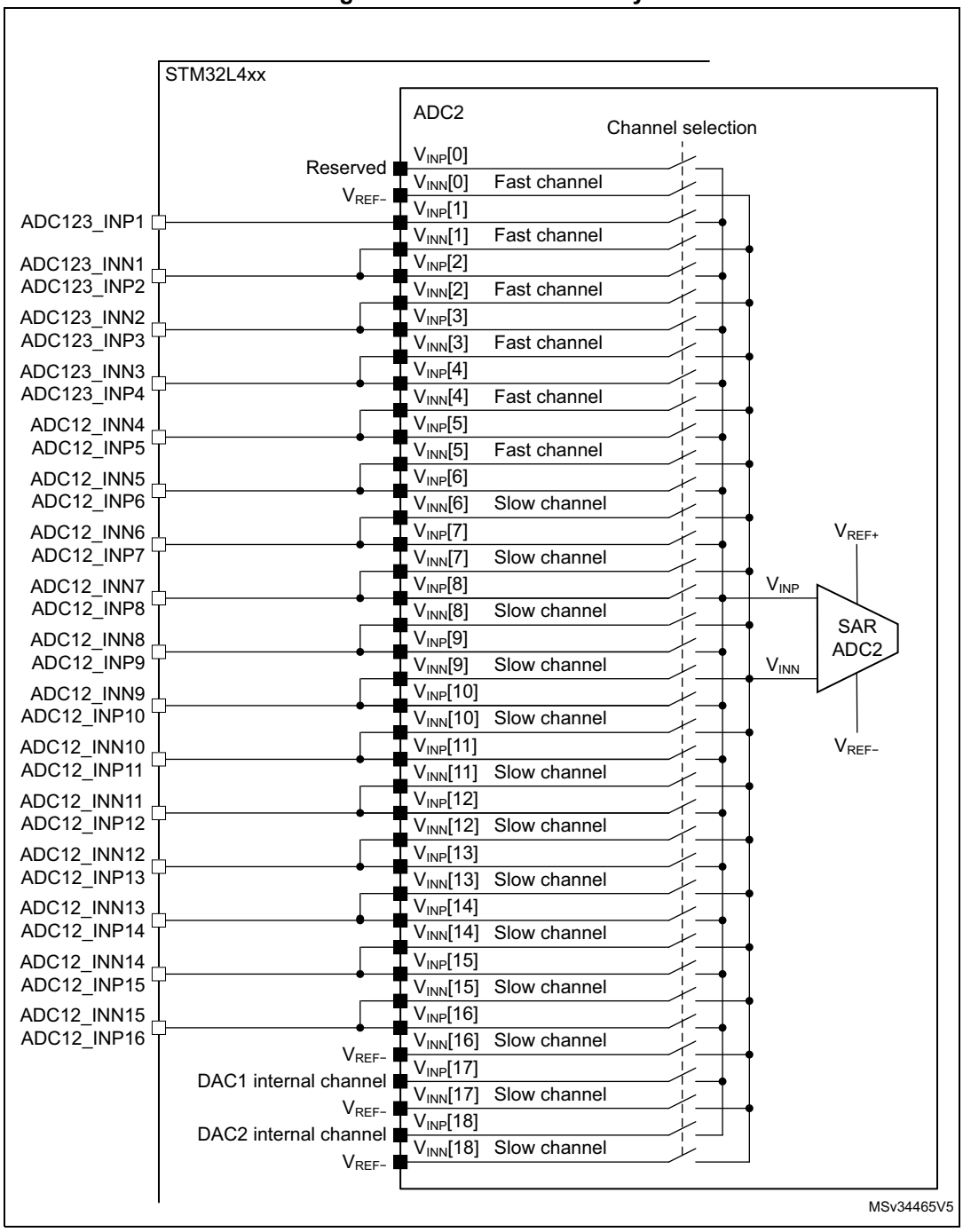

Figure 70. ADC3 connectivity

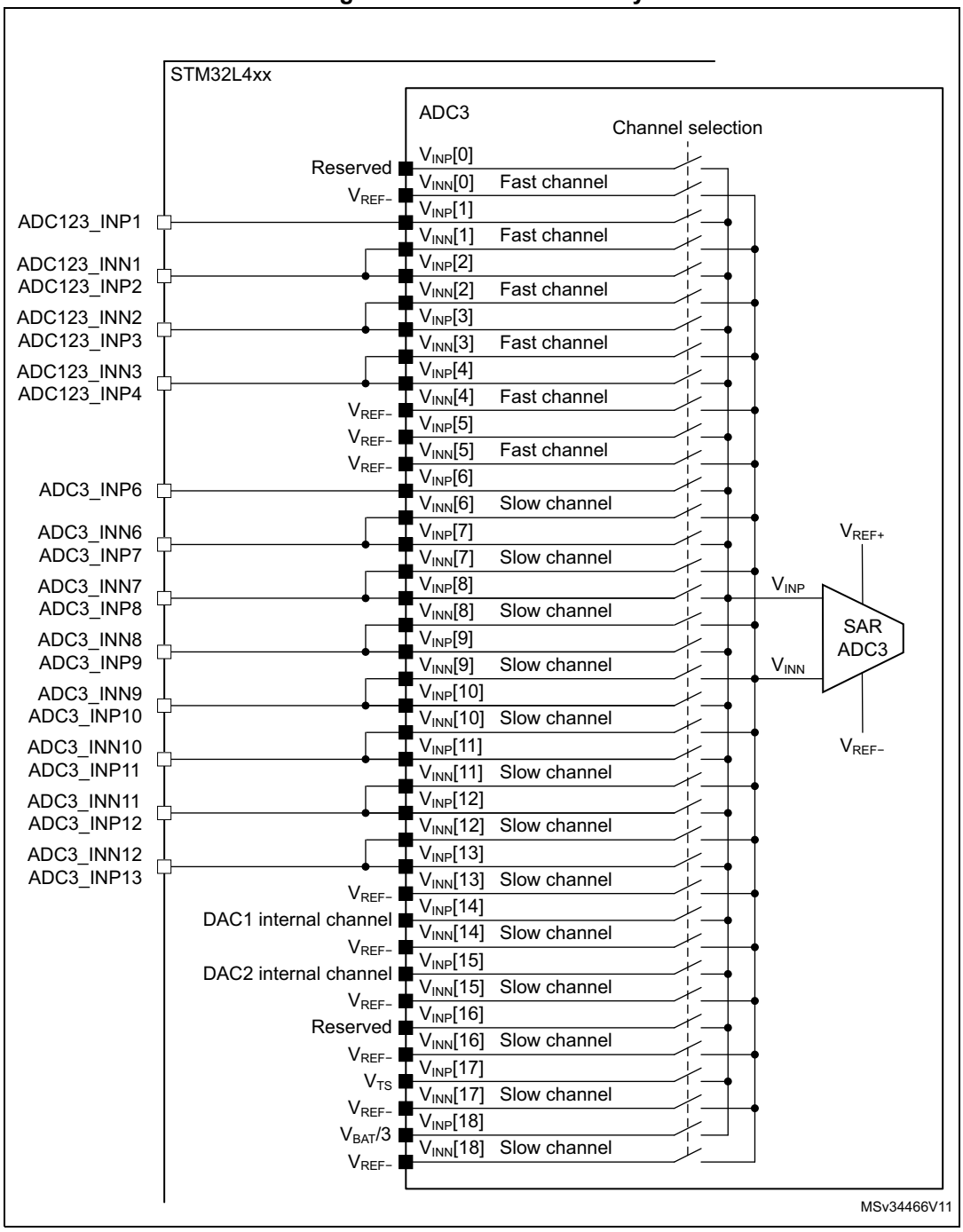

18.4.5 Slave AHB interface

The ADCs implement an AHB slave port for control/status register and data access. The features of the AHB interface are listed below:

- Word (32-bit) accesses
- Single cycle response
- Response to all read/write accesses to the registers with zero wait states.

The AHB slave interface does not support split/retry requests, and never generates AHB errors.

18.4.6 ADC Deep-power-down mode (DEEPPWD) and ADC voltage regulator (ADVREGEN)

By default, the ADC is in Deep-power-down mode where its supply is internally switched off to reduce the leakage currents (the reset state of bit DEEPPWD is 1 in the ADC_CR register).

To start ADC operations, it is first needed to exit Deep-power-down mode by setting bit DEEPPWD=0.

Then, it is mandatory to enable the ADC internal voltage regulator by setting the bit ADVREGEN=1 into ADC_CR register. The software must wait for the startup time of the ADC voltage regulator ($T_{ADCVREG_STUP}$) before launching a calibration or enabling the ADC. This delay must be implemented by software.

For the startup time of the ADC voltage regulator, refer to device datasheet for $T_{ADCVREG_STUP}$ parameter.

After ADC operations are complete, the ADC can be disabled (ADEN=0). It is possible to save power by also disabling the ADC voltage regulator. This is done by writing bit ADVREGEN=0.

Then, to save more power by reducing the leakage currents, it is also possible to re-enter in ADC Deep-power-down mode by setting bit DEEPPWD=1 into ADC_CR register. This is particularly interesting before entering STOP mode.

Note: Writing DEEPPWD=1 automatically disables the ADC voltage regulator and bit ADVREGEN is automatically cleared.

When the internal voltage regulator is disabled (ADVREGEN=0), the internal analog calibration is kept.

In ADC Deep-power-down mode (DEEPPWD=1), the internal analog calibration is lost and it is necessary to either relaunch a calibration or re-apply the calibration factor which was previously saved (refer to *Section 18.4.8: Calibration (ADCAL, ADCALDIF, ADC_CALFACT)*).

18.4.7 Single-ended and differential input channels

Channels can be configured to be either single-ended input or differential input by programming DIFSEL[i] bits in the ADC_DIFSEL register. This configuration must be written while the ADC is disabled (ADEN=0). Note that the DIFSEL[i] bits corresponding to single-ended channels are always programmed at 0.

In single-ended input mode, the analog voltage to be converted for channel “i” is the difference between the external voltage $V_{INP[i]}$ (positive input) and V_{REF-} (negative input).

In differential input mode, the analog voltage to be converted for channel “i” is the difference between the external voltage $V_{INP[i]}$ (positive input) and $V_{INN[i]}$ (negative input).

When ADC is configured as differential mode, both inputs should be biased at (V_{REF+}) / 2 voltage.

The input signals are supposed to be differential (common mode voltage should be fixed).

Internal channels (such as V_{TS} and V_{REFINT}) are used in single-ended mode only.

For a complete description of how the input channels are connected for each ADC, refer to *Section 18.4.4: ADC1/2/3 connectivity*.

Caution: When configuring the channel “i” in differential input mode, its negative input voltage $V_{INN[i]}$ is connected to another channel. As a consequence, this channel is no longer usable in single-ended mode or in differential mode and must never be configured to be converted. Some channels are shared between ADC1/ADC2/ADC3: this can make the channel on the other ADC unusable. Only exception is interleaved mode for ADC master and the slave.

18.4.8 Calibration (ADCAL, ADCALDIF, ADC_CALFACT)

Each ADC provides an automatic calibration procedure which drives all the calibration sequence including the power-on/off sequence of the ADC. During the procedure, the ADC calculates a calibration factor which is 7-bit wide and which is applied internally to the ADC until the next ADC power-off. During the calibration procedure, the application must not use the ADC and must wait until calibration is complete.

Calibration is preliminary to any ADC operation. It removes the offset error which may vary from chip to chip due to process or bandgap variation.

The calibration factor to be applied for single-ended input conversions is different from the factor to be applied for differential input conversions:

- Write ADCALDIF=0 before launching a calibration which will be applied for single-ended input conversions.
- Write ADCALDIF=1 before launching a calibration which will be applied for differential input conversions.

The calibration is then initiated by software by setting bit ADCAL=1. Calibration can only be initiated when the ADC is disabled (when ADEN=0). ADCAL bit stays at 1 during all the calibration sequence. It is then cleared by hardware as soon the calibration completes. At this time, the associated calibration factor is stored internally in the analog ADC and also in the bits CALFACT_S[6:0] or CALFACT_D[6:0] of ADC_CALFACT register (depending on single-ended or differential input calibration)

The internal analog calibration is kept if the ADC is disabled (ADEN=0). However, if the ADC is disabled for extended periods, then it is recommended that a new calibration cycle is run before re-enabling the ADC.

The internal analog calibration is lost each time the power of the ADC is removed (example, when the product enters in STANDBY or VBAT mode). In this case, to avoid spending time recalibrating the ADC, it is possible to re-write the calibration factor into the ADC_CALFACT register without recalibrating, supposing that the software has previously saved the calibration factor delivered during the previous calibration.

The calibration factor can be written if the ADC is enabled but not converting (ADEN=1 and ADSTART=0 and JADSTART=0). Then, at the next start of conversion, the calibration factor will automatically be injected into the analog ADC. This loading is transparent and does not add any cycle latency to the start of the conversion. It is recommended to recalibrate when V_{REF+} voltage changed more than 10%.

Software procedure to calibrate the ADC

1. Ensure DEEPPWD=0, ADVREGEN=1 and that ADC voltage regulator startup time has elapsed.
2. Ensure that ADEN=0.
3. Select the input mode for this calibration by setting ADCALDIF=0 (single-ended input) or ADCALDIF=1 (differential input).
4. Set ADCAL=1.
5. Wait until ADCAL=0.
6. The calibration factor can be read from ADC_CALFACT register.

Figure 71. ADC calibration

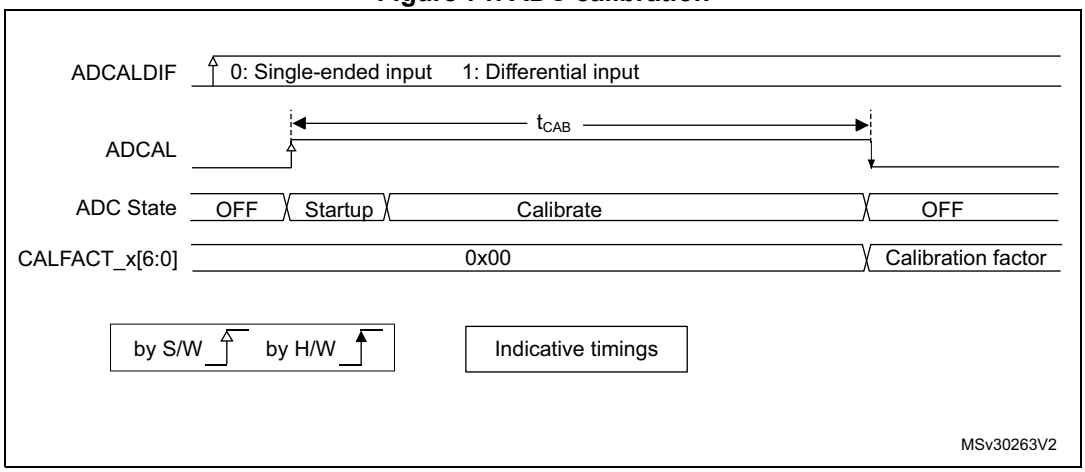

Software procedure to re-inject a calibration factor into the ADC

1. Ensure ADEN=1 and ADSTART=0 and JADSTART=0 (ADC enabled and no conversion is ongoing).
2. Write CALFACT_S and CALFACT_D with the new calibration factors.
3. When a conversion is launched, the calibration factor will be injected into the analog ADC only if the internal analog calibration factor differs from the one stored in bits CALFACT_S for single-ended input channel or bits CALFACT_D for differential input channel.

Figure 72. Updating the ADC calibration factor

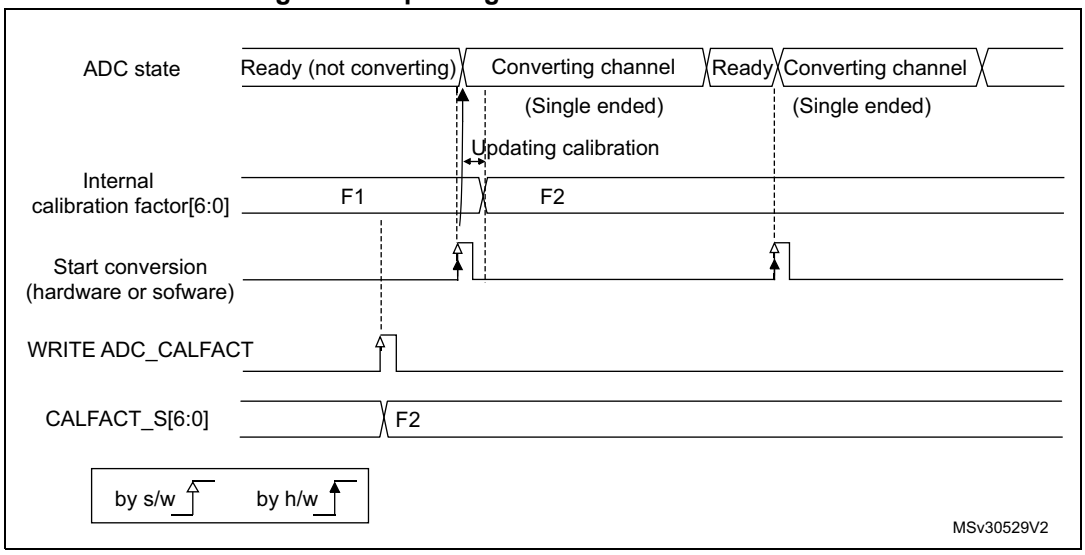

Converting single-ended and differential analog inputs with a single ADC

If the ADC is supposed to convert both differential and single-ended inputs, two calibrations must be performed, one with ADCALDIF=0 and one with ADCALDIF=1. The procedure is the following:

1. Disable the ADC.
2. Calibrate the ADC in single-ended input mode (with ADCALDIF=0). This updates the register CALFACT_S[6:0].
3. Calibrate the ADC in differential input modes (with ADCALDIF=1). This updates the register CALFACT_D[6:0].
4. Enable the ADC, configure the channels and launch the conversions. Each time there is a switch from a single-ended to a differential inputs channel (and vice-versa), the calibration will automatically be injected into the analog ADC.

Figure 73. Mixing single-ended and differential channels

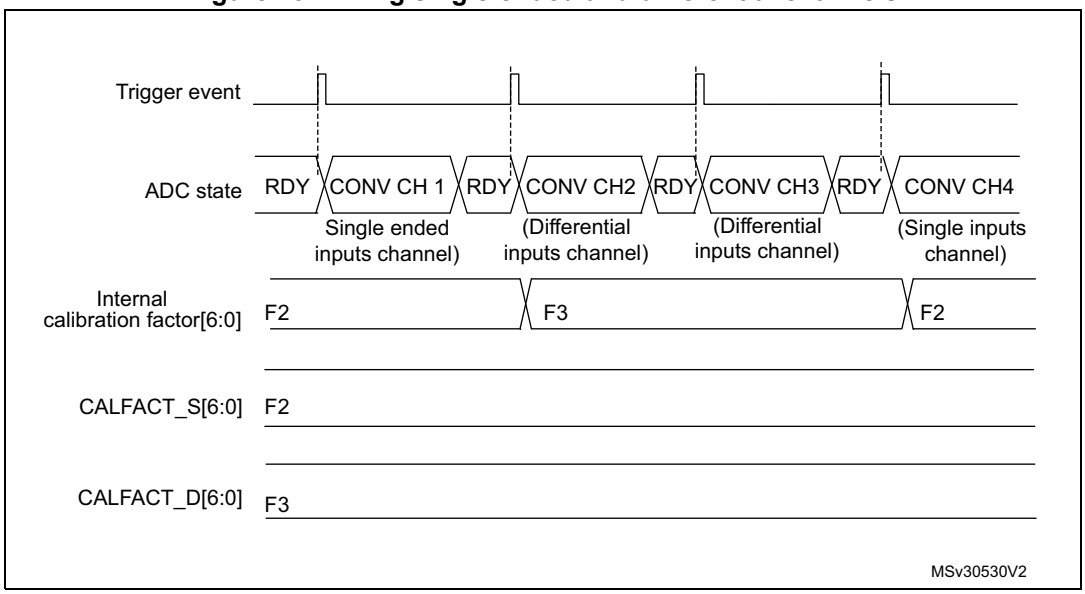

18.4.9 ADC on-off control (ADEN, ADDIS, ADRDY)

First of all, follow the procedure explained in *Section 18.4.6: ADC Deep-power-down mode (DEEPPWD) and ADC voltage regulator (ADVREGEN)*).

Once DEEPPWD=0 and ADVREGEN=1, the ADC can be enabled and the ADC needs a stabilization time of t_{STAB} before it starts converting accurately, as shown in *Figure 74*. Two control bits enable or disable the ADC:

- ADEN=1 enables the ADC. The flag ADRDY will be set once the ADC is ready for operation.
- ADDIS=1 disables the ADC. ADEN and ADDIS are then automatically cleared by hardware as soon as the analog ADC is effectively disabled.

Regular conversion can then start either by setting ADSTART=1 (refer to *Section 18.4.18: Conversion on external trigger and trigger polarity (EXTSEL, EXTEN,JEXTSEL, JEXTEN)*) or when an external trigger event occurs, if triggers are enabled.

Injected conversions start by setting JADSTART=1 or when an external injected trigger event occurs, if injected triggers are enabled.

Software procedure to enable the ADC

1. Clear the ADRDY bit in the ADC_ISR register by writing ‘1’.
2. Set ADEN=1.
3. Wait until ADRDY=1 (ADRDY is set after the ADC startup time). This can be done using the associated interrupt (setting ADRDYIE=1).
4. Clear the ADRDY bit in the ADC_ISR register by writing ‘1’ (optional).

Caution: ADEN bit cannot be set when ADCAL is set and during four ADC clock cycles after the ADCAL bit is cleared by hardware (end of the calibration).

Software procedure to disable the ADC

1. Check that both ADSTART=0 and JADSTART=0 to ensure that no conversion is ongoing. If required, stop any regular and injected conversion ongoing by setting ADSTP=1 and JADSTP=1 and then wait until ADSTP=0 and JADSTP=0.
2. Set ADDIS=1.
3. If required by the application, wait until ADEN=0, until the analog ADC is effectively disabled (ADDIS will automatically be reset once ADEN=0).

Figure 74. Enabling / disabling the ADC

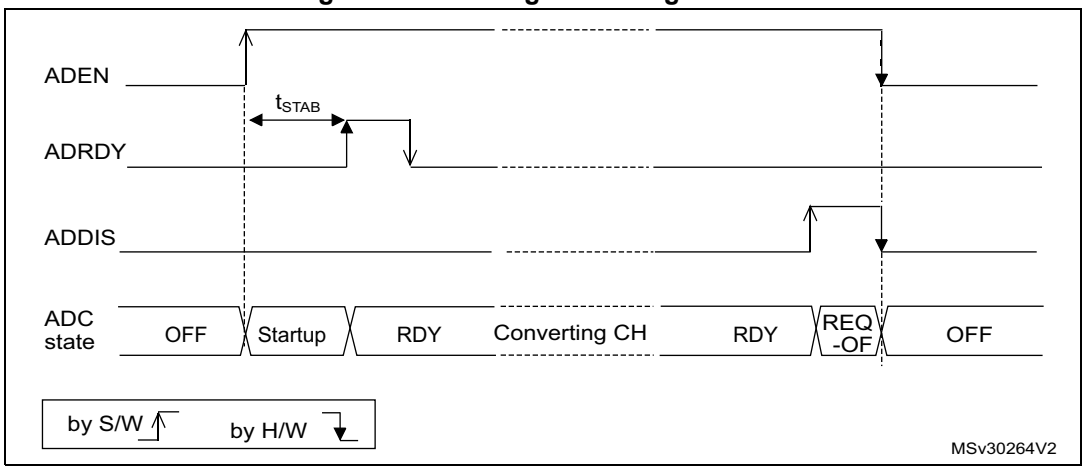

18.4.10 Constraints when writing the ADC control bits

The software is allowed to write the RCC control bits to configure and enable the ADC clock (refer to RCC Section), the DIFSEL[i] control bits in the ADC_DIFSEL register and the control bits ADCAL and ADEN in the ADC_CR register, only if the ADC is disabled (ADEN must be equal to 0).

The software is then allowed to write the control bits ADSTART, JADSTART and ADDIS of the ADC_CR register only if the ADC is enabled and there is no pending request to disable the ADC (ADEN must be equal to 1 and ADDIS to 0).

For all the other control bits of the ADC_CFGR, ADC_SMPRx, ADC_SQRy, ADC_JDRy, ADC_OFRy, ADC_OFCHRy and ADC_IER registers:

- For control bits related to configuration of regular conversions, the software is allowed to write them only if the ADC is enabled (ADEN=1) and if there is no regular conversion ongoing (ADSTART must be equal to 0).
- For control bits related to configuration of injected conversions, the software is allowed to write them only if the ADC is enabled (ADEN=1) and if there is no injected conversion ongoing (JADSTART must be equal to 0).

The software is allowed to write the ADSTP or JADSTP control bits of the ADC_CR register only if the ADC is enabled, possibly converting, and if there is no pending request to disable the ADC (ADSTART or JADSTART must be equal to 1 and ADDIS to 0).

The software can write the register ADC_JSQR at any time, when the ADC is enabled (ADEN=1). Refer to *Section 18.6.16: ADC injected sequence register (ADC_JSQR)* for additional details.

Note: There is no hardware protection to prevent these forbidden write accesses and ADC behavior may become in an unknown state. To recover from this situation, the ADC must be disabled (clear ADEN=0 as well as all the bits of ADC_CR register).

18.4.11 Channel selection (SQRx, JSQRx)

There are up to 20 multiplexed channels per ADC:

- Up to 11 slow analog inputs coming from GPIO pads (ADCx_INP/INN[6:16])
  Depending on the products, not all of them are available on GPIO pads.
- The ADCs are connected to the following internal analog inputs:
  - The internal reference voltage (V_{REFINT}) is connected to ADC1_INP0/INN0.
  - The internal temperature sensor (V_{TS}) is connected to ADC1_INP17/INN17 and ADC3_INP/INN17.
  - The V_{BAT} monitoring channel ($V_{BAT}/3$) is connected to ADC1_INP18/INN18 and ADC3_INP/INN18.
  - The DAC1 internal channel 1 is connected to ADC2_INP/INN17 and ADC3_INP/INN14.
  - The DAC1 internal channel 2 is connected to ADC2_INP/INN18 and ADC3_INP/INN15.

Note: To convert one of the internal analog channels, the corresponding analog sources must first be enabled by programming bits VREFEN, CH17SEL or CH18SEL in the ADCx_CCR registers.

Caution: On STM32L47x/L48x devices, before any conversion of an input channel coming from GPIO pads, it is necessary to configure the corresponding GPIOx_ASCR register in the GPIO, in addition to the I/O configuration in analog mode.

It is possible to organize the conversions in two groups: regular and injected. A group consists of a sequence of conversions that can be done on any channel and in any order. For instance, it is possible to implement the conversion sequence in the following order: ADCx_INP/INN3, ADCx_INP/INN8, ADCx_INP/INN2, ADCx_INN/INP2, ADCx_INP/INN0, ADCx_INP/INN2, ADCx_INP/INN2, ADCx_INP/INN15.

- A **regular group** is composed of up to 16 conversions. The regular channels and their order in the conversion sequence must be selected in the ADC_SQRy registers. The total number of conversions in the regular group must be written in the L[3:0] bits in the ADC_SQR1 register.
- An **injected group** is composed of up to 4 conversions. The injected channels and their order in the conversion sequence must be selected in the ADC_JSQR register. The total number of conversions in the injected group must be written in the L[1:0] bits in the ADC_JSQR register.

ADC_SQRy registers must not be modified while regular conversions can occur. For this, the ADC regular conversions must be first stopped by writing ADSTP=1 (refer to *Section 18.4.17: Stopping an ongoing conversion (ADSTP, JADSTP)*).

The software is allowed to modify on-the-fly the ADC_JSQR register when JADSTART is set to 1 (injected conversions ongoing) only when the context queue is enabled (JQDIS=0 in ADC_CFGR register). Refer to *Section 18.4.21: Queue of context for injected conversions*

18.4.12 Channel-wise programmable sampling time (SMPR1, SMPR2)

Before starting a conversion, the ADC must establish a direct connection between the voltage source under measurement and the embedded sampling capacitor of the ADC. This sampling time must be enough for the input voltage source to charge the embedded capacitor to the input voltage level.

Each channel can be sampled with a different sampling time which is programmable using the SMP[2:0] bits in the ADC_SMPR1 and ADC registers. It is therefore possible to select among the following sampling time values:

- SMP = 000: 2.5 ADC clock cycles
- SMP = 001: 6.5 ADC clock cycles
- SMP = 010: 12.5 ADC clock cycles
- SMP = 011: 24.5 ADC clock cycles
- SMP = 100: 47.5 ADC clock cycles
- SMP = 101: 92.5 ADC clock cycles
- SMP = 110: 247.5 ADC clock cycles
- SMP = 111: 640.5 ADC clock cycles

The total conversion time is calculated as follows:

T_{CONV} = Sampling time + 12.5 ADC clock cycles

Example:

With F_{ADC_CLK} = 30 MHz and a sampling time of 2.5 ADC clock cycles:

T_{CONV} = (2.5 + 12.5) ADC clock cycles = 15 ADC clock cycles = 500 ns

The ADC notifies the end of the sampling phase by setting the status bit EOSMP (only for regular conversion).

Constraints on the sampling time

For each channel, SMP[2:0] bits must be programmed to respect a minimum sampling time as specified in the ADC characteristics section of the datasheets.

I/O analog switches voltage booster

The I/O analog switches resistance increases when the V_{DDA} voltage is too low. This requires to have the sampling time adapted accordingly (cf datasheet for electrical characteristics). This resistance can be minimized at low V_{DDA} by enabling an internal voltage booster with BOOSTEN bit in the SYSCFG_CFGR1 register.

SMPPLUS control bit

When a sampling time of 2.5 ADC clock cycles is selected, the total conversion time becomes 15 cycles in 12-bit mode. If the dual interleaved mode is used (see *Section : Interleaved mode with independent injected*), the sampling interval cannot be equal to the value specified since an even number of cycles is required for the conversion. The SMPPLUS bit can be used to change the sampling time 2.5 ADC clock cycles into 3.5 ADC clock cycles. In this way, the total conversion time becomes 16 clock cycles, thus making possible to interleave every 8 cycles.

18.4.13 Single conversion mode (CONT=0)

In Single conversion mode, the ADC performs once all the conversions of the channels. This mode is started with the CONT bit at 0 by either:

- Setting the ADSTART bit in the ADC_CR register (for a regular channel)
- Setting the JADSTART bit in the ADC_CR register (for an injected channel)
- External hardware trigger event (for a regular or injected channel)

Inside the regular sequence, after each conversion is complete:

- The converted data are stored into the 16-bit ADC_DR register
- The EOC (end of regular conversion) flag is set
- An interrupt is generated if the EOCIE bit is set

Inside the injected sequence, after each conversion is complete:

- The converted data are stored into one of the four 16-bit ADC_JDRy registers
- The JEOC (end of injected conversion) flag is set
- An interrupt is generated if the JEOCIE bit is set

After the regular sequence is complete:

- The EOS (end of regular sequence) flag is set
- An interrupt is generated if the EOSIE bit is set

After the injected sequence is complete:

- The JEOS (end of injected sequence) flag is set
- An interrupt is generated if the JEOSIE bit is set

Then the ADC stops until a new external regular or injected trigger occurs or until bit ADSTART or JADSTART is set again.

Note: To convert a single channel, program a sequence with a length of 1.

18.4.14 Continuous conversion mode (CONT=1)

This mode applies to regular channels only.

In continuous conversion mode, when a software or hardware regular trigger event occurs, the ADC performs once all the regular conversions of the channels and then automatically restarts and continuously converts each conversions of the sequence. This mode is started with the CONT bit at 1 either by external trigger or by setting the ADSTART bit in the ADC_CR register.

Inside the regular sequence, after each conversion is complete:

- The converted data are stored into the 16-bit ADC_DR register
- The EOC (end of conversion) flag is set
- An interrupt is generated if the EOCIE bit is set

After the sequence of conversions is complete:

- The EOS (end of sequence) flag is set
- An interrupt is generated if the EOSIE bit is set

Then, a new sequence restarts immediately and the ADC continuously repeats the conversion sequence.

Note: To convert a single channel, program a sequence with a length of 1.

It is not possible to have both discontinuous mode and continuous mode enabled: it is forbidden to set both DISCEN=1 and CONT=1.

Injected channels cannot be converted continuously. The only exception is when an injected channel is configured to be converted automatically after regular channels in continuous mode (using JAUTO bit), refer to Auto-injection mode section).

18.4.15 Starting conversions (ADSTART, JADSTART)

Software starts ADC regular conversions by setting ADSTART=1.

When ADSTART is set, the conversion starts:

- Immediately: if EXTEN[1:0] = 00 (software trigger)
- At the next active edge of the selected regular hardware trigger: if EXTEN[1:0] # 00

Software starts ADC injected conversions by setting JADSTART=1.

When JADSTART is set, the conversion starts:

- Immediately, if JEXTEN[1:0] = 00 (software trigger)
- At the next active edge of the selected injected hardware trigger: if JEXTEN[1:0] # 00

Note: In auto-injection mode (JAUTO=1), use ADSTART bit to start the regular conversions followed by the auto-injected conversions (JADSTART must be kept cleared).

ADSTART and JADSTART also provide information on whether any ADC operation is currently ongoing. It is possible to re-configure the ADC while ADSTART=0 and JADSTART=0 are both true, indicating that the ADC is idle.

ADSTART is cleared by hardware:

- In single mode with software regular trigger (CONT=0, EXTSEL=0x0)
  - At any end of regular conversion sequence (EOS assertion) or at any end of subgroup processing if DISCEN = 1
- In all cases (CONT=x, EXTSEL=x)
  - After execution of the ADSTP procedure asserted by the software.

Note: In continuous mode (CONT=1), ADSTART is not cleared by hardware with the assertion of EOS because the sequence is automatically relaunched.

When a hardware trigger is selected in single mode (CONT=0 and EXTSEL /=0x00), ADSTART is not cleared by hardware with the assertion of EOS to help the software which does not need to reset ADSTART again for the next hardware trigger event. This ensures that no further hardware triggers are missed.

JADSTART is cleared by hardware:

- In single mode with software injected trigger (JEXTSEL=0x0)
  - At any end of injected conversion sequence (JEOS assertion) or at any end of subgroup processing if JDISCEN = 1
- in all cases (JEXTSEL=x)
  - After execution of the JADSTP procedure asserted by the software.

Note: When the software trigger is selected, ADSTART bit should not be set if the EOC flag is still high.

18.4.16 ADC timing

The elapsed time between the start of a conversion and the end of conversion is the sum of the configured sampling time plus the successive approximation time depending on data resolution:

$$T_{CONV} = T_{SMPL} + T_{SAR} = [2.5\ _{|min} + 12.5\ _{|12bit}] \times T_{ADC_CLK}$$

$$T_{CONV} = T_{SMPL} + T_{SAR} = 83.33\ ns\ _{|min} + 416.67\ ns\ _{|12bit} = 500.0\ ns\ (for\ F_{ADC_CLK} = 30\ MHz)$$

Figure 75. Analog to digital conversion time

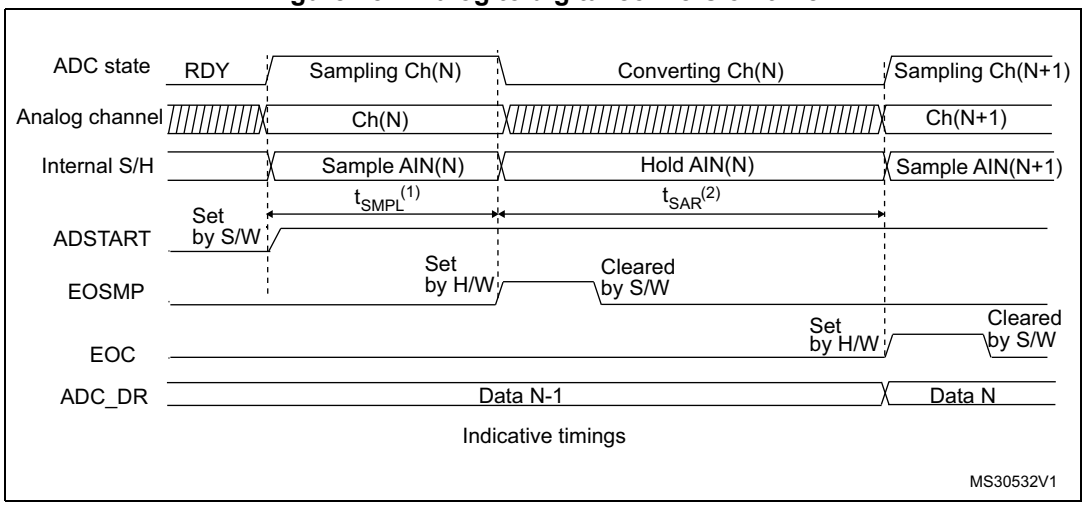

1. T_{SMPL} depends on SMP[2:0].
2. T_{SAR} depends on RES[2:0].

18.4.17 Stopping an ongoing conversion (ADSTP, JADSTP)

The software can decide to stop regular conversions ongoing by setting ADSTP=1 and injected conversions ongoing by setting JADSTP=1.

Stopping conversions will reset the ongoing ADC operation. Then the ADC can be reconfigured (ex: changing the channel selection or the trigger) ready for a new operation.

Note that it is possible to stop injected conversions while regular conversions are still operating and vice-versa. This allows, for instance, re-configuration of the injected conversion sequence and triggers while regular conversions are still operating (and vice-versa).

When the ADSTP bit is set by software, any ongoing regular conversion is aborted with partial result discarded (ADC_DR register is not updated with the current conversion).

When the JADSTP bit is set by software, any ongoing injected conversion is aborted with partial result discarded (ADC_JDRy register is not updated with the current conversion). The scan sequence is also aborted and reset (meaning that relaunching the ADC would restart a new sequence).

Once this procedure is complete, bits ADSTP/ADSTART (in case of regular conversion), or JADSTP/JADSTART (in case of injected conversion) are cleared by hardware and the software must poll ADSTART (or JADSTART) until the bit is reset before assuming the ADC is completely stopped.

Note: In auto-injection mode (JAUTO=1), setting ADSTP bit aborts both regular and injected conversions (JADSTP must not be used).

Figure 76. Stopping ongoing regular conversions

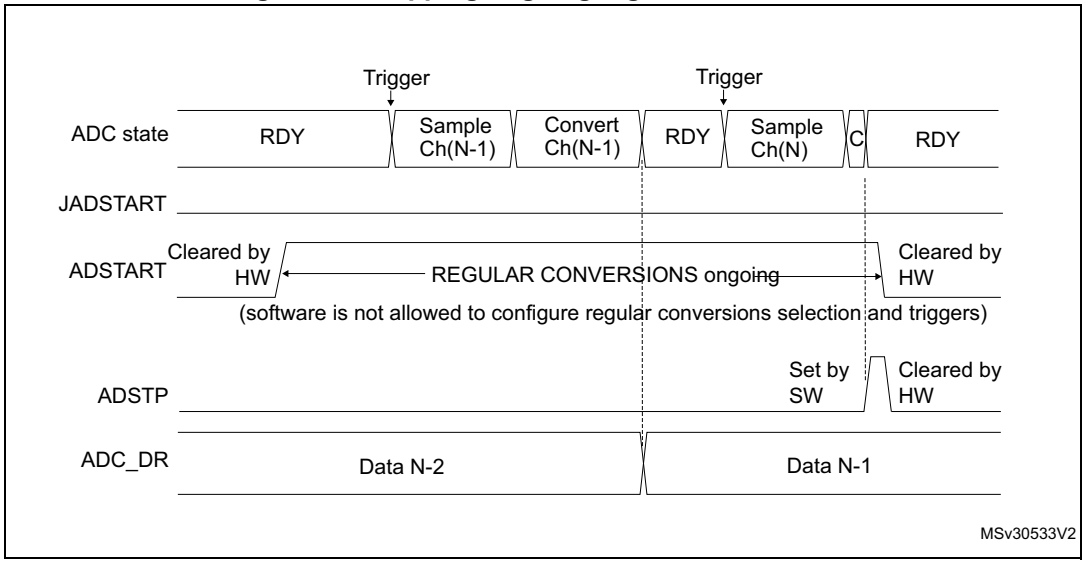

Figure 77. Stopping ongoing regular and injected conversions

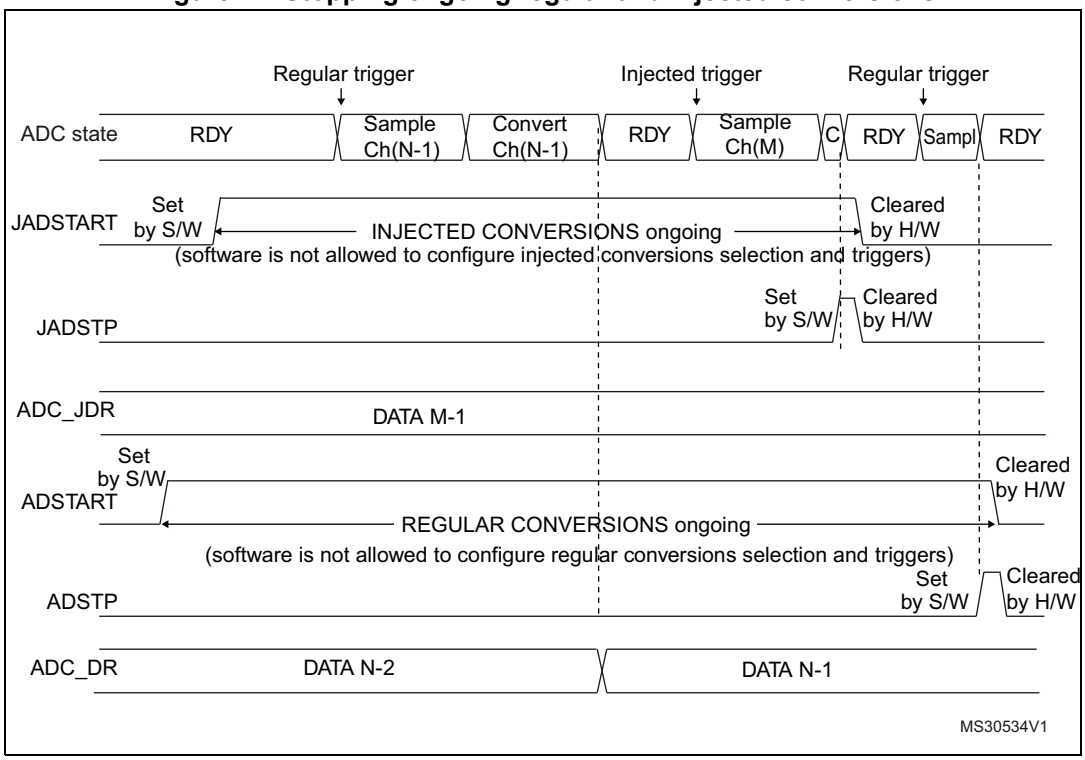

18.4.18 Conversion on external trigger and trigger polarity (EXTSEL, EXTEN,JEXTSEL, JEXTEN)

A conversion or a sequence of conversions can be triggered either by software or by an external event (e.g. timer capture, input pins). If the EXTEN[1:0] control bits (for a regular conversion) or JEXTEN[1:0] bits (for an injected conversion) are different from 0b00, then external events are able to trigger a conversion with the selected polarity.

When the Injected Queue is enabled (bit JQDIS=0), injected software triggers are not possible.

The regular trigger selection is effective once software has set bit ADSTART=1 and the injected trigger selection is effective once software has set bit JADSTART=1.

Any hardware triggers which occur while a conversion is ongoing are ignored.

- If bit ADSTART=0, any regular hardware triggers which occur are ignored.
- If bit JADSTART=0, any injected hardware triggers which occur are ignored.

Table 106 provides the correspondence between the EXTEN[1:0] and JEXTEN[1:0] values and the trigger polarity.

Table 106. Configuring the trigger polarity for regular external triggers

EXTEN[1:0]	Source
00	Hardware Trigger detection disabled, software trigger detection enabled
01	Hardware Trigger with detection on the rising edge
10	Hardware Trigger with detection on the falling edge
11	Hardware Trigger with detection on both the rising and falling edges

Note: The polarity of the regular trigger cannot be changed on-the-fly.

Table 107. Configuring the trigger polarity for injected external triggers

JEXTEN[1:0]	Source
00	– If JQDIS=1 (Queue disabled): Hardware trigger detection disabled, software trigger detection enabled – If JQDIS=0 (Queue enabled), Hardware and software trigger detection disabled
01	Hardware Trigger with detection on the rising edge
10	Hardware Trigger with detection on the falling edge
11	Hardware Trigger with detection on both the rising and falling edges

Note: The polarity of the injected trigger can be anticipated and changed on-the-fly when the queue is enabled (JQDIS=0). Refer to Section 18.4.21: Queue of context for injected conversions.

The EXTSEL and JEXTSEL control bits select which out of 16 possible events can trigger conversion for the regular and injected groups.

A regular group conversion can be interrupted by an injected trigger.

Note: The regular trigger selection cannot be changed on-the-fly.
The injected trigger selection can be anticipated and changed on-the-fly. Refer to Section 18.4.21: Queue of context for injected conversions on page 532

Each ADC master shares the same input triggers with its ADC slave as described in *Figure 78*.

Figure 78. Triggers sharing between ADC master and ADC slave

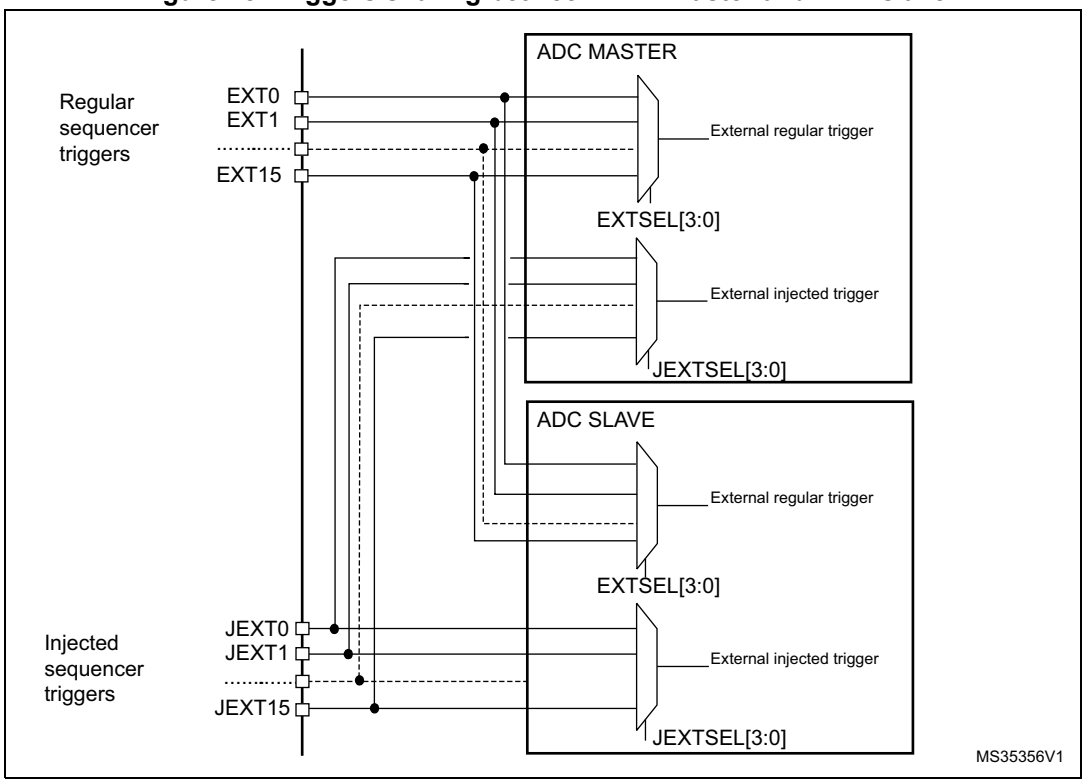

Table 108 to *Table 109* give all the possible external triggers of the three ADCs for regular and injected conversion.

Table 108. ADC1, ADC2 and ADC3 - External triggers for regular channels

Name	Source	Type	EXTSEL[3:0]
EXT0	TIM1_CH1	Internal signal from on-chip timers	0000
EXT1	TIM1_CH2	Internal signal from on-chip timers	0001
EXT2	TIM1_CH3	Internal signal from on-chip timers	0010
EXT3	TIM2_CH2	Internal signal from on-chip timers	0011
EXT4	TIM3_TRGO	Internal signal from on-chip timers	0100
EXT5	TIM4_CH4	Internal signal from on-chip timers	0101
EXT6	EXTI line 11	External pin	0110
EXT7	TIM8_TRGO	Internal signal from on-chip timers	0111
EXT8	TIM8_TRGO2	Internal signal from on-chip timers	1000
EXT9	TIM1_TRGO	Internal signal from on-chip timers	1001

Table 108. ADC1, ADC2 and ADC3 - External triggers for regular channels (continued)

Name	Source	Type	EXTSEL[3:0]
EXT10	TIM1_TRGO2	Internal signal from on-chip timers	1010
EXT11	TIM2_TRGO	Internal signal from on-chip timers	1011
EXT12	TIM4_TRGO	Internal signal from on-chip timers	1100
EXT13	TIM6_TRGO	Internal signal from on-chip timers	1101
EXT14	TIM15_TRGO	Internal signal from on-chip timers	1110
EXT15	TIM3_CH4	Internal signal from on-chip timers	1111

Table 109. ADC1, ADC2 and ADC3 - External trigger for injected channels

Name	Source	Type	JEXTSEL[3:0]
JEXT0	TIM1_TRGO	Internal signal from on-chip timers	0000
JEXT1	TIM1_CH4	Internal signal from on-chip timers	0001
JEXT2	TIM2_TRGO	Internal signal from on-chip timers	0010
JEXT3	TIM2_CH1	Internal signal from on-chip timers	0011
JEXT4	TIM3_CH4	Internal signal from on-chip timers	0100
JEXT5	TIM4_TRGO	Internal signal from on-chip timers	0101
JEXT6	EXTI line 15	External pin	0110
JEXT7	TIM8_CH4	Internal signal from on-chip timers	0111
JEXT8	TIM1_TRGO2	Internal signal from on-chip timers	1000
JEXT9	TIM8_TRGO	Internal signal from on-chip timers	1001
JEXT10	TIM8_TRGO2	Internal signal from on-chip timers	1010
JEXT11	TIM3_CH3	Internal signal from on-chip timers	1011
JEXT12	TIM3_TRGO	Internal signal from on-chip timers	1100
JEXT13	TIM3_CH1	Internal signal from on-chip timers	1101
JEXT14	TIM6_TRGO	Internal signal from on-chip timers	1110
JEXT15	TIM15_TRGO	Internal signal from on-chip timers	1111

18.4.19 Injected channel management

Triggered injection mode

To use triggered injection, the JAUTO bit in the ADC_CFGR register must be cleared.

1. Start the conversion of a group of regular channels either by an external trigger or by setting the ADSTART bit in the ADC_CR register.
2. If an external injected trigger occurs, or if the JADSTART bit in the ADC_CR register is set during the conversion of a regular group of channels, the current conversion is

reset and the injected channel sequence switches are launched (all the injected channels are converted once).

3. Then, the regular conversion of the regular group of channels is resumed from the last interrupted regular conversion.
4. If a regular event occurs during an injected conversion, the injected conversion is not interrupted but the regular sequence is executed at the end of the injected sequence. *Figure 79* shows the corresponding timing diagram.

Note: When using triggered injection, one must ensure that the interval between trigger events is longer than the injection sequence. For instance, if the sequence length is 28 ADC clock cycles (that is two conversions with a sampling time of 1.5 clock periods), the minimum interval between triggers must be 29 ADC clock cycles.

Auto-injection mode

If the JAUTO bit in the ADC_CFGR register is set, then the channels in the injected group are automatically converted after the regular group of channels. This can be used to convert a sequence of up to 20 conversions programmed in the ADC_SQRy and ADC_JSQR registers.

In this mode, the ADSTART bit in the ADC_CR register must be set to start regular conversions, followed by injected conversions (JADSTART must be kept cleared). Setting the ADSTP bit aborts both regular and injected conversions (JADSTP bit must not be used).

In this mode, external trigger on injected channels must be disabled.

If the CONT bit is also set in addition to the JAUTO bit, regular channels followed by injected channels are continuously converted.

Note: It is not possible to use both the auto-injected and discontinuous modes simultaneously.

When the DMA is used for exporting regular sequencer's data in JAUTO mode, it is necessary to program it in circular mode (CIRC bit set in DMA_CCRx register). If the CIRC bit is reset (single-shot mode), the JAUTO sequence will be stopped upon DMA Transfer Complete event.

Figure 79. Injected conversion latency

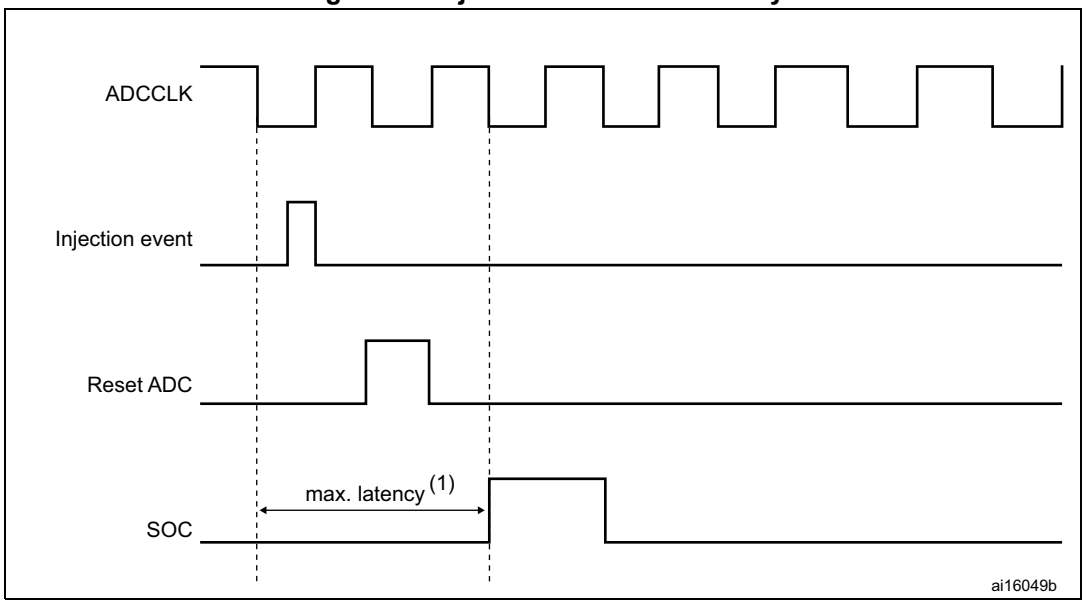

1. The maximum latency value can be found in the electrical characteristics of the device datasheet.

18.4.20 Discontinuous mode (DISCEN, DISCNUM, JDISCEN)

Regular group mode

This mode is enabled by setting the DISCEN bit in the ADC_CFGR register.

It is used to convert a short sequence (subgroup) of n conversions (n ≤ 8) that is part of the sequence of conversions selected in the ADC_SQRy registers. The value of n is specified by writing to the DISCNUM[2:0] bits in the ADC_CFGR register.

When an external trigger occurs, it starts the next n conversions selected in the ADC_SQRy registers until all the conversions in the sequence are done. The total sequence length is defined by the L[3:0] bits in the ADC_SQR1 register.

Example:

- DISCEN=1, n=3, channels to be converted = 1, 2, 3, 6, 7, 8, 9, 10, 11
  - 1st trigger: channels converted are 1, 2, 3 (an EOC event is generated at each conversion).
  - 2nd trigger: channels converted are 6, 7, 8 (an EOC event is generated at each conversion).
  - 3rd trigger: channels converted are 9, 10, 11 (an EOC event is generated at each conversion) and an EOS event is generated after the conversion of channel 11.
  - 4th trigger: channels converted are 1, 2, 3 (an EOC event is generated at each conversion).
  - ...
- DISCEN=0, channels to be converted = 1, 2, 3, 6, 7, 8, 9, 10,11
  - 1st trigger: the complete sequence is converted: channel 1, then 2, 3, 6, 7, 8, 9, 10 and 11. Each conversion generates an EOC event and the last one also generates an EOS event.
  - All the next trigger events will relaunch the complete sequence.

Note: The channel numbers referred to in the above example might not be available on all microcontrollers.

When a regular group is converted in discontinuous mode, no rollover occurs (the last subgroup of the sequence can have less than n conversions).

When all subgroups are converted, the next trigger starts the conversion of the first subgroup. In the example above, the 4th trigger reconverts the channels 1, 2 and 3 in the 1st subgroup.

It is not possible to have both discontinuous mode and continuous mode enabled. In this case (if DISCEN=1, CONT=1), the ADC behaves as if continuous mode was disabled.

Injected group mode

This mode is enabled by setting the JDISCEN bit in the ADC_CFGR register. It converts the sequence selected in the ADC_JSQR register, channel by channel, after an external injected trigger event. This is equivalent to discontinuous mode for regular channels where 'n' is fixed to 1.

When an external trigger occurs, it starts the next channel conversions selected in the ADC_JSQR registers until all the conversions in the sequence are done. The total sequence length is defined by the JL[1:0] bits in the ADC_JSQR register.

Example:

- JDISCEN=1, channels to be converted = 1, 2, 3
  - 1st trigger: channel 1 converted (a JEOC event is generated)
  - 2nd trigger: channel 2 converted (a JEOC event is generated)
  - 3rd trigger: channel 3 converted and a JEOC event + a JEOS event are generated
  - ...

Note: The channel numbers referred to in the above example might not be available on all microcontrollers.

When all injected channels have been converted, the next trigger starts the conversion of the first injected channel. In the example above, the 4th trigger reconverts the 1st injected channel 1.

It is not possible to use both auto-injected mode and discontinuous mode simultaneously: the bits DISCEN and JDISCEN must be kept cleared by software when JAUTO is set.

18.4.21 Queue of context for injected conversions

A queue of context is implemented to anticipate up to 2 contexts for the next injected sequence of conversions. JQDIS bit of ADC_CFGR register must be reset to enable this feature. Only hardware-triggered conversions are possible when the context queue is enabled.

This context consists of:

- Configuration of the injected triggers (bits JEXTEN[1:0] and JEXTSEL bits in ADC_JSQR register)
- Definition of the injected sequence (bits JSQx[4:0] and JL[1:0] in ADC_JSQR register)

All the parameters of the context are defined into a single register ADC_JSQR and this register implements a queue of 2 buffers, allowing the bufferization of up to 2 sets of parameters:

- The JSQR register can be written at any moment even when injected conversions are ongoing.
- Each data written into the JSQR register is stored into the Queue of context.
- At the beginning, the Queue is empty and the first write access into the JSQR register immediately changes the context and the ADC is ready to receive injected triggers.
- Once an injected sequence is complete, the Queue is consumed and the context changes according to the next JSQR parameters stored in the Queue. This new context is applied for the next injected sequence of conversions.
- A Queue overflow occurs when writing into register JSQR while the Queue is full. This overflow is signaled by the assertion of the flag JQOVF. When an overflow occurs, the write access of JSQR register which has created the overflow is ignored and the queue of context is unchanged. An interrupt can be generated if bit JQOVFIE is set.
- Two possible behaviors are possible when the Queue becomes empty, depending on the value of the control bit JQM of register ADC_CFGR:
  - If JQM=0, the Queue is empty just after enabling the ADC, but then it can never be empty during run operations: the Queue always maintains the last active context and any further valid start of injected sequence will be served according to the last active context.
  - If JQM=1, the Queue can be empty after the end of an injected sequence or if the Queue is flushed. When this occurs, there is no more context in the queue and hardware triggers are disabled. Therefore, any further hardware injected triggers are ignored until the software re-writes a new injected context into JSQR register.
- Reading JSQR register returns the current JSQR context which is active at that moment. When the JSQR context is empty, JSQR is read as 0x0000.
- The Queue is flushed when stopping injected conversions by setting JADSTP=1 or when disabling the ADC by setting ADDIS=1:
  - If JQM=0, the Queue is maintained with the last active context.
  - If JQM=1, the Queue becomes empty and triggers are ignored.

Note: When configured in discontinuous mode (bit JDISCEN=1), only the last trigger of the injected sequence changes the context and consumes the Queue.The 1st trigger only consumes the queue but others are still valid triggers as shown by the discontinuous mode example below (length = 3 for both contexts):

- *1st trigger, discontinuous. Sequence 1: context 1 consumed, 1st conversion carried out*
- *2nd trigger, disc. Sequence 1: 2nd conversion.*
- *3rd trigger, discontinuous. Sequence 1: 3rd conversion.*
- *4th trigger, discontinuous. Sequence 2: context 2 consumed, 1st conversion carried out.*
- *5th trigger, discontinuous. Sequence 2: 2nd conversion.*
- *6th trigger, discontinuous. Sequence 2: 3rd conversion.*

Behavior when changing the trigger or sequence context

The *Figure 80* and *Figure 81* show the behavior of the context Queue when changing the sequence or the triggers.

Figure 80. Example of JSQR queue of context (sequence change)

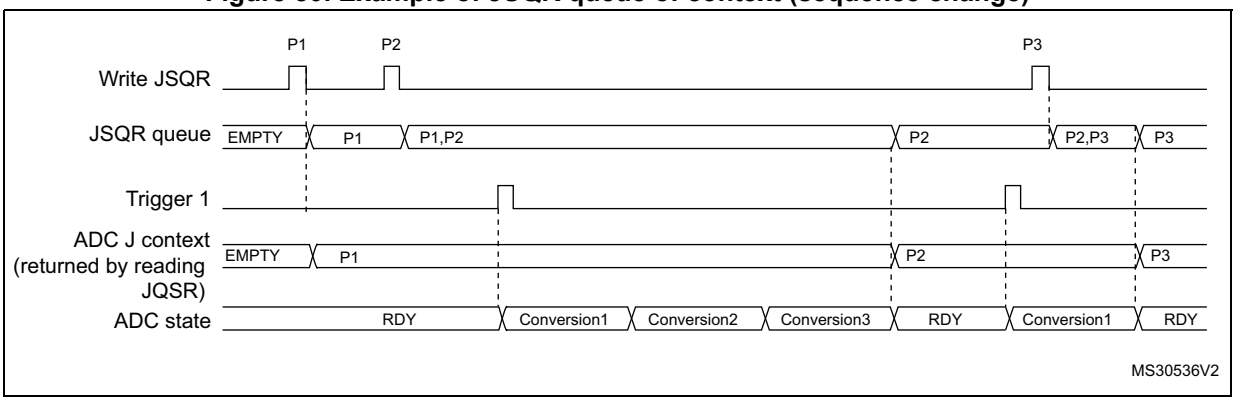

1. Parameters:
   P1: sequence of 3 conversions, hardware trigger 1
   P2: sequence of 1 conversion, hardware trigger 1
   P3: sequence of 4 conversions, hardware trigger 1

Figure 81. Example of JSQR queue of context (trigger change)

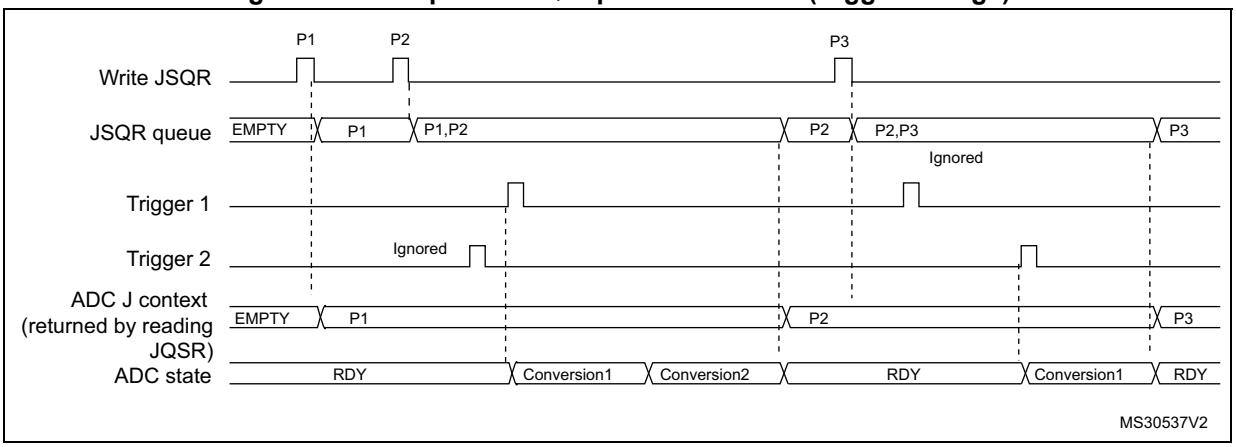

1. Parameters:
   P1: sequence of 2 conversions, hardware trigger 1
   P2: sequence of 1 conversion, hardware trigger 2
   P3: sequence of 4 conversions, hardware trigger 1

Queue of context: Behavior when a queue overflow occurs

The *Figure 82* and *Figure 83* show the behavior of the context Queue if an overflow occurs before or during a conversion.

Figure 82. Example of JSQR queue of context with overflow before conversion

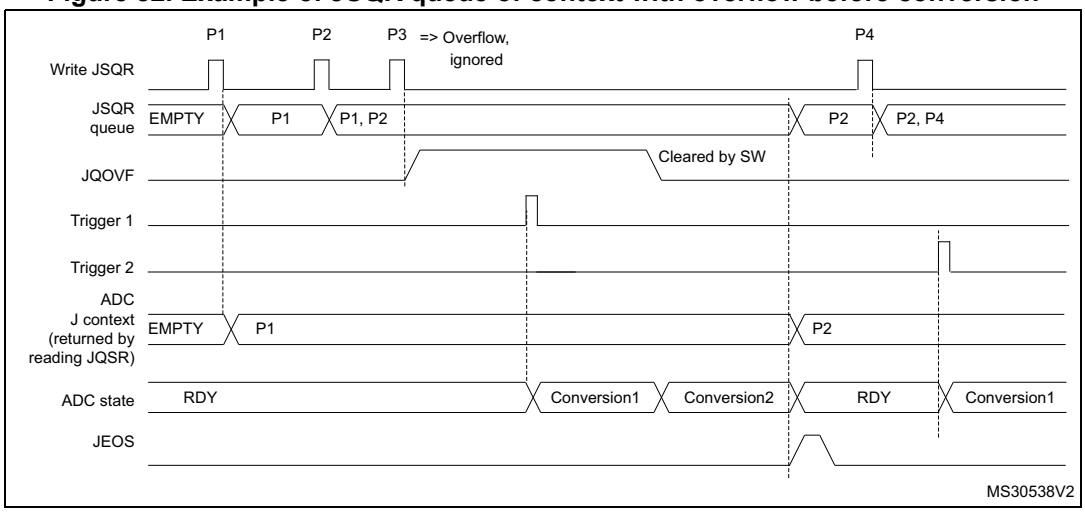

1. Parameters:
   P1: sequence of 2 conversions, hardware trigger 1
   P2: sequence of 1 conversion, hardware trigger 2
   P3: sequence of 3 conversions, hardware trigger 1
   P4: sequence of 4 conversions, hardware trigger 1

Figure 83. Example of JSQR queue of context with overflow during conversion

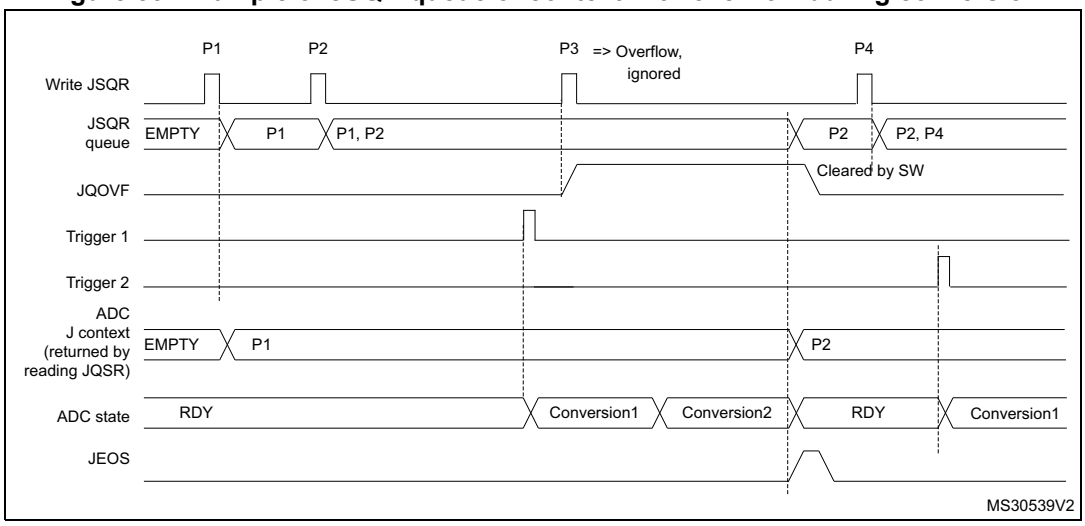

1. Parameters:
   P1: sequence of 2 conversions, hardware trigger 1
   P2: sequence of 1 conversion, hardware trigger 2
   P3: sequence of 3 conversions, hardware trigger 1
   P4: sequence of 4 conversions, hardware trigger 1

It is recommended to manage the queue overflows as described below:

- After each P context write into JSQR register, flag JQOVF shows if the write has been ignored or not (an interrupt can be generated).
- Avoid Queue overflows by writing the third context (P3) only once the flag JEOS of the previous context P2 has been set. This ensures that the previous context has been consumed and that the queue is not full.

Queue of context: Behavior when the queue becomes empty

Figure 84 and *Figure 85* show the behavior of the context Queue when the Queue becomes empty in both cases JQM=0 or 1.

Figure 84. Example of JSQR queue of context with empty queue (case JQM=0)

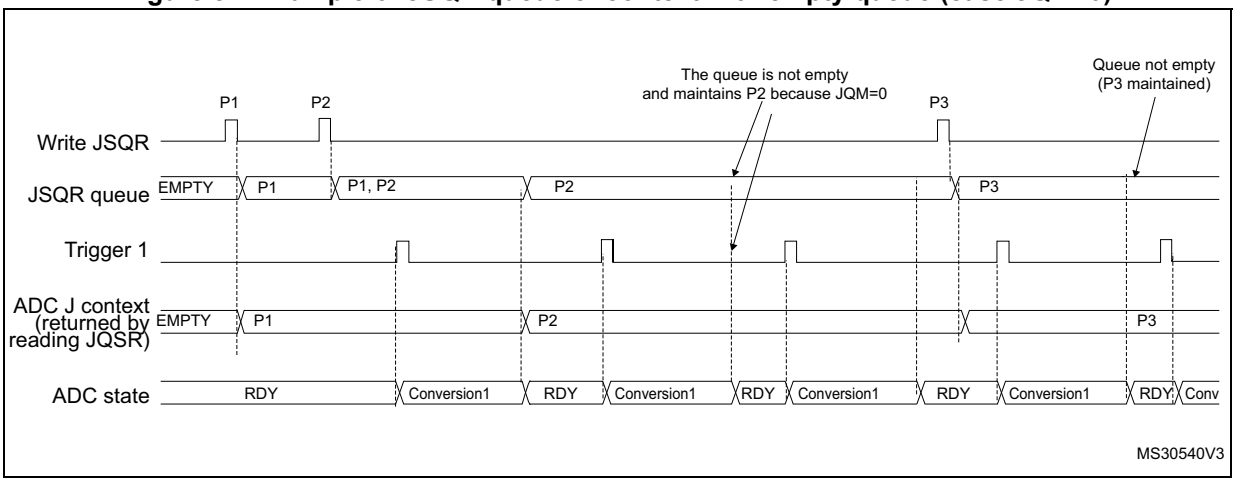

1. Parameters:
   P1: sequence of 1 conversion, hardware trigger 1
   P2: sequence of 1 conversion, hardware trigger 1
   P3: sequence of 1 conversion, hardware trigger 1

Note: When writing P3, the context changes immediately. However, because of internal resynchronization, there is a latency and if a trigger occurs just after or before writing P3, it can happen that the conversion is launched considering the context P2. To avoid this situation, the user must ensure that there is no ADC trigger happening when writing a new context that applies immediately.

Figure 85. Example of JSQR queue of context with empty queue (case JQM=1)

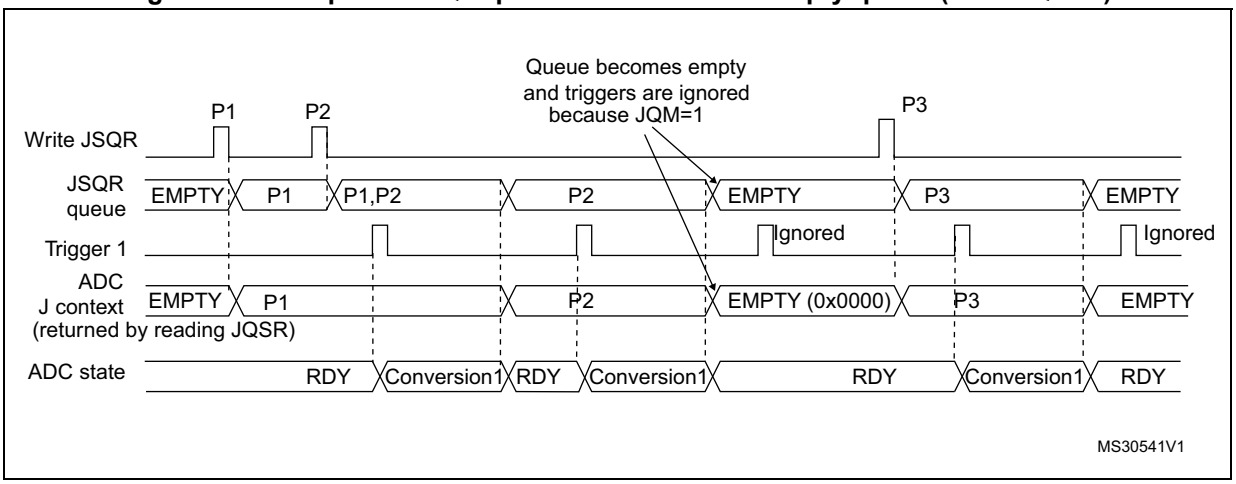

1. Parameters:
   P1: sequence of 1 conversion, hardware trigger 1
   P2: sequence of 1 conversion, hardware trigger 1
   P3: sequence of 1 conversion, hardware trigger 1

Flushing the queue of context

The figures below show the behavior of the context Queue in various situations when the queue is flushed.

Figure 86. Flushing JSQR queue of context by setting JADSTP=1 (JQM=0). Case when JADSTP occurs during an ongoing conversion.

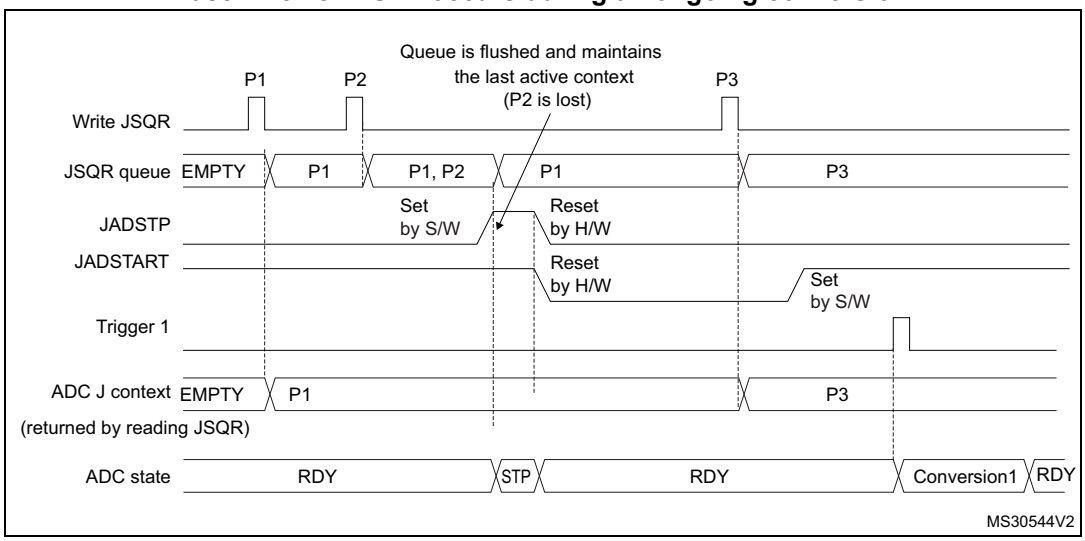

1. Parameters:
   P1: sequence of 1 conversion, hardware trigger 1
   P2: sequence of 1 conversion, hardware trigger 1
   P3: sequence of 1 conversion, hardware trigger 1

Figure 87. Flushing JSQR queue of context by setting JADSTP=1 (JQM=0). Case when JADSTP occurs during an ongoing conversion and a new trigger occurs.

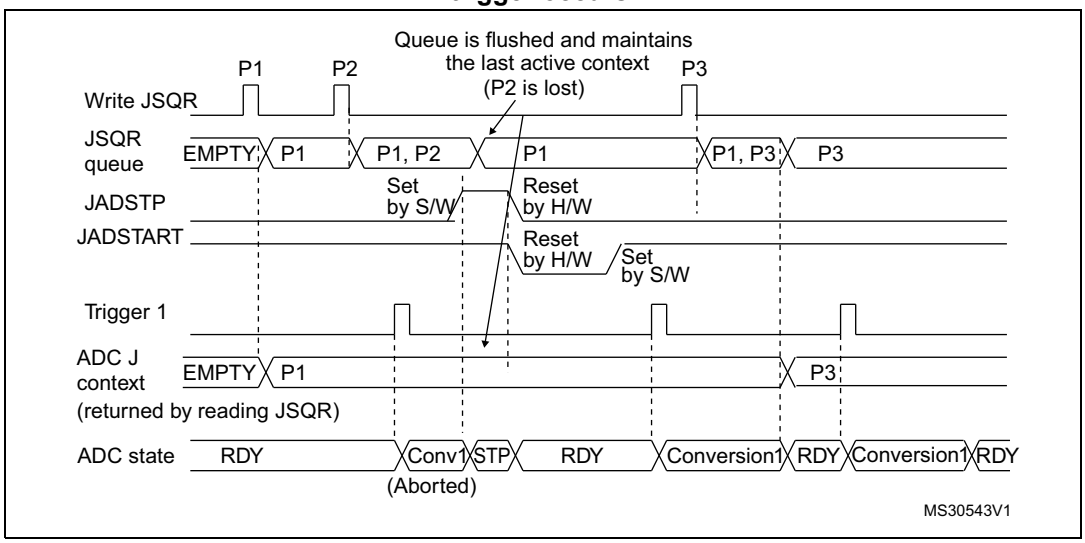

1. Parameters:
   P1: sequence of 1 conversion, hardware trigger 1
   P2: sequence of 1 conversion, hardware trigger 1
   P3: sequence of 1 conversion, hardware trigger 1

Figure 88. Flushing JSQR queue of context by setting JADSTP=1 (JQM=0). Case when JADSTP occurs outside an ongoing conversion

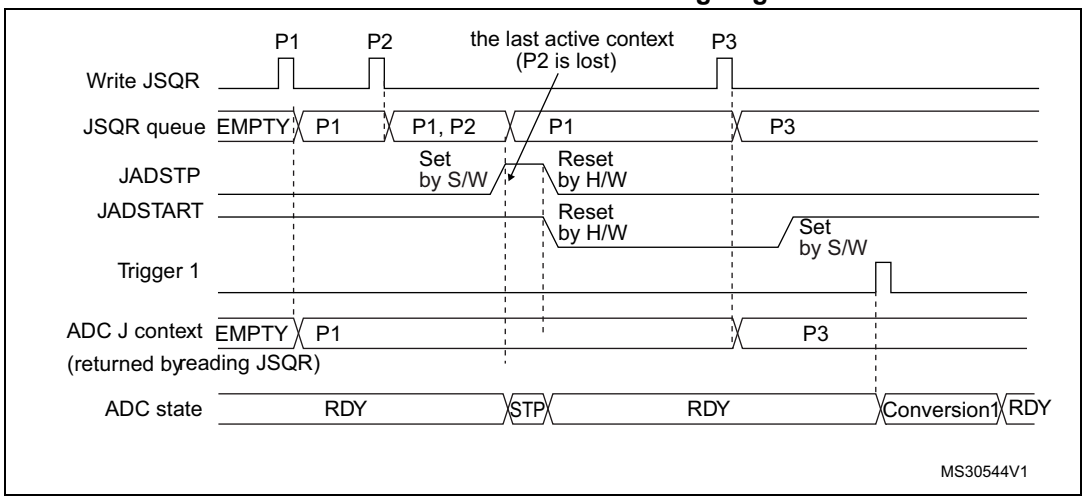

1. Parameters:
   P1: sequence of 1 conversion, hardware trigger 1
   P2: sequence of 1 conversion, hardware trigger 1
   P3: sequence of 1 conversion, hardware trigger 1

Figure 89. Flushing JSQR queue of context by setting JADSTP=1 (JQM=1)

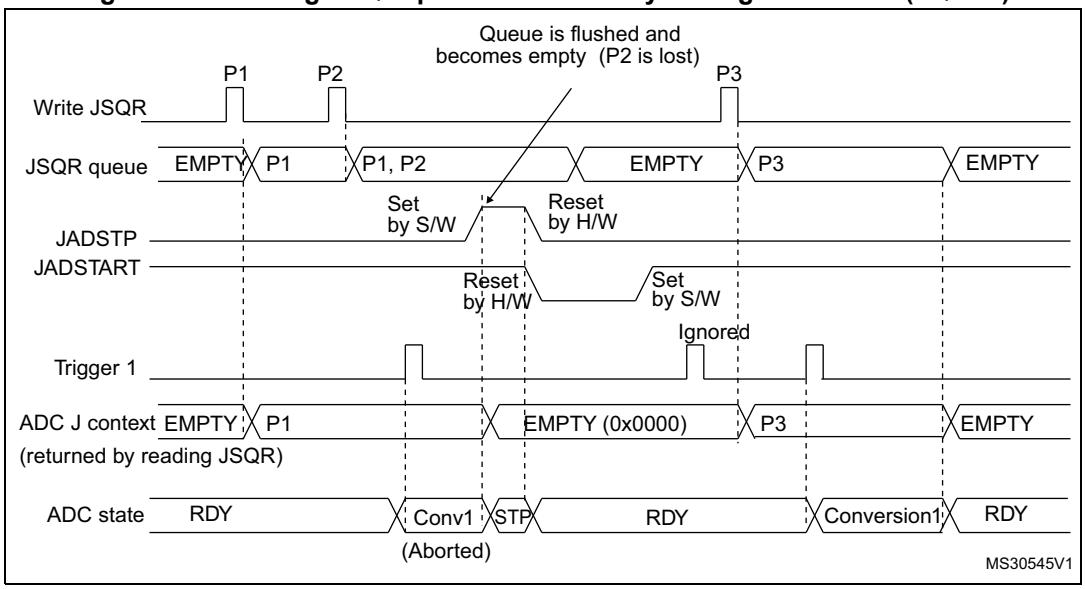

1. Parameters:
   P1: sequence of 1 conversion, hardware trigger 1
   P2: sequence of 1 conversion, hardware trigger 1
   P3: sequence of 1 conversion, hardware trigger 1

Figure 90. Flushing JSQR queue of context by setting ADDIS=1 (JQM=0)

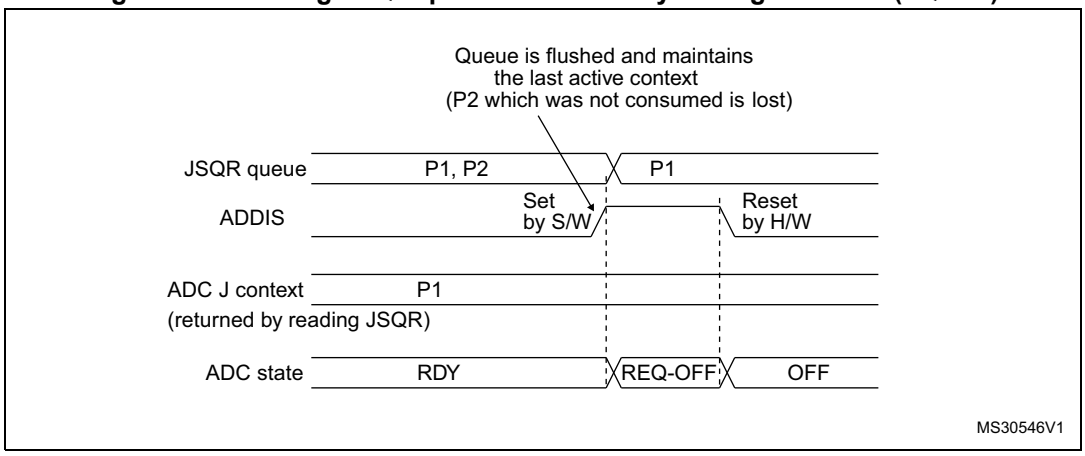

1. Parameters:
   P1: sequence of 1 conversion, hardware trigger 1
   P2: sequence of 1 conversion, hardware trigger 1
   P3: sequence of 1 conversion, hardware trigger 1

Figure 91. Flushing JSQR queue of context by setting ADDIS=1 (JQM=1)

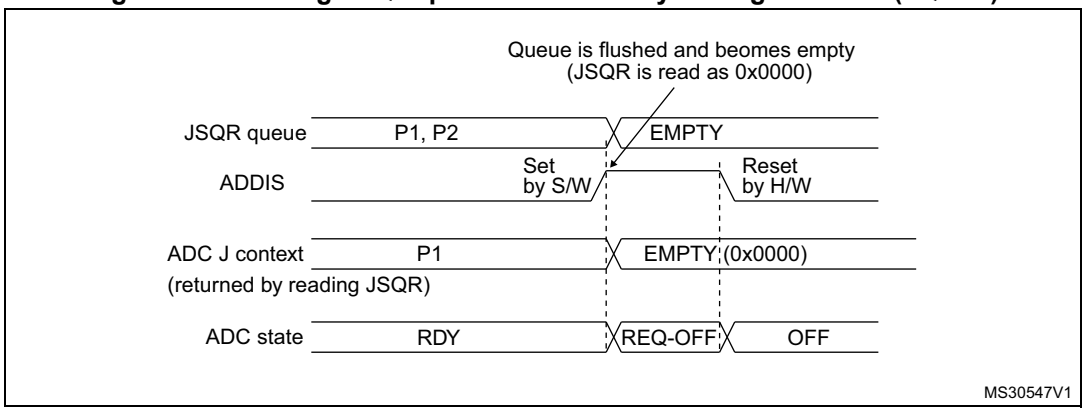

1. Parameters:
   P1: sequence of 1 conversion, hardware trigger 1
   P2: sequence of 1 conversion, hardware trigger 1
   P3: sequence of 1 conversion, hardware trigger 1

Queue of context: Starting the ADC with an empty queue

The following procedure must be followed to start ADC operation with an empty queue, in case the first context is not known at the time the ADC is initialized. This procedure is only applicable when JQM bit is reset:

5. Write a dummy JSQR with JEXTEN[1:0] not equal to 00 (otherwise triggering a software conversion)
6. Set JADSTART
7. Set JADSTP
8. Wait until JADSTART is reset
9. Set JADSTART.

Disabling the queue

It is possible to disable the queue by setting bit JQDIS=1 into the ADC_CFGR register.

18.4.22 Programmable resolution (RES) - fast conversion mode

It is possible to perform faster conversion by reducing the ADC resolution.

The resolution can be configured to be either 12, 10, 8, or 6 bits by programming the control bits RES[1:0]. *Figure 96*, *Figure 97*, *Figure 98* and *Figure 99* show the conversion result format with respect to the resolution as well as to the data alignment.

Lower resolution allows faster conversion time for applications where high-data precision is not required. It reduces the conversion time spent by the successive approximation steps according to *Table 110*.

Table 110. T_{SAR} timings depending on resolution

RES (bits)	T_{SAR} (ADC clock cycles)	T_{SAR} (ns) at F_{ADC}= 30 MHz	T_{CONV} (ADC clock cycles) (with Sampling Time= 2.5 ADC clock cycles)	T_{CONV} (ns) at F_{ADC}= 30 MHz
12	12.5 ADC clock cycles	416.67 ns	15 ADC clock cycles	500.0 ns
10	10.5 ADC clock cycles	350.0 ns	13 ADC clock cycles	433.33 ns
8	8.5 ADC clock cycles	203.33 ns	11 ADC clock cycles	366.67 ns
6	6.5 ADC clock cycles	216.67 ns	9 ADC clock cycles	300.0 ns

18.4.23 End of conversion, end of sampling phase (EOC, JEOC, EOSMP)

The ADC notifies the application for each end of regular conversion (EOC) event and each injected conversion (JEOC) event.

The ADC sets the EOC flag as soon as a new regular conversion data is available in the ADC_DR register. An interrupt can be generated if bit EOCIE is set. EOC flag is cleared by the software either by writing 1 to it or by reading ADC_DR.

The ADC sets the JEOC flag as soon as a new injected conversion data is available in one of the ADC_JDRy register. An interrupt can be generated if bit JEOCIE is set. JEOC flag is cleared by the software either by writing 1 to it or by reading the corresponding ADC_JDRy register.

The ADC also notifies the end of Sampling phase by setting the status bit EOSMP (for regular conversions only). EOSMP flag is cleared by software by writing 1 to it. An interrupt can be generated if bit EOSMPIE is set.

18.4.24 End of conversion sequence (EOS, JEOS)

The ADC notifies the application for each end of regular sequence (EOS) and for each end of injected sequence (JEOS) event.

The ADC sets the EOS flag as soon as the last data of the regular conversion sequence is available in the ADC_DR register. An interrupt can be generated if bit EOSIE is set. EOS flag is cleared by the software either by writing 1 to it.

The ADC sets the JEOS flag as soon as the last data of the injected conversion sequence is complete. An interrupt can be generated if bit JEOSIE is set. JEOS flag is cleared by the software either by writing 1 to it.

18.4.25 Timing diagrams example (single/continuous modes, hardware/software triggers)

Figure 92. Single conversions of a sequence, software trigger

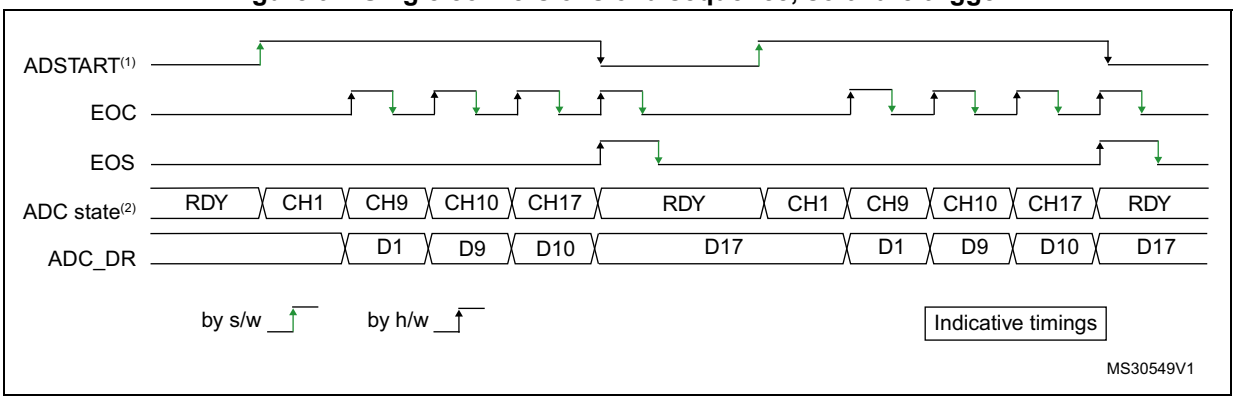

1. EXTEN[1:0]=00, CONT=0
2. Channels selected = 1,9, 10, 17; AUTDLY=0.

Figure 93. Continuous conversion of a sequence, software trigger

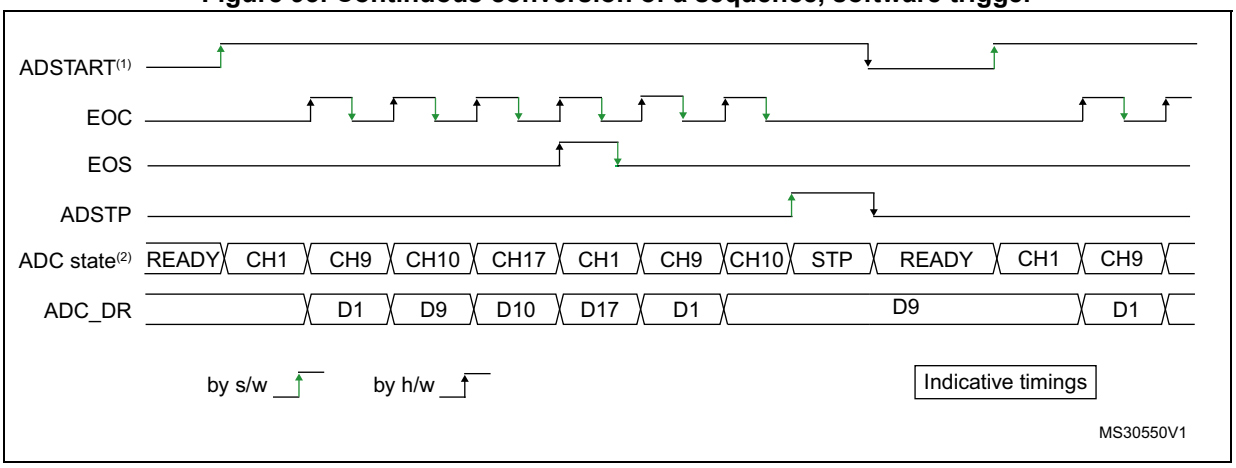

1. EXTEN[1:0]=00, CONT=1
2. Channels selected = 1,9, 10, 17; AUTDLY=0.

Figure 94. Single conversions of a sequence, hardware trigger

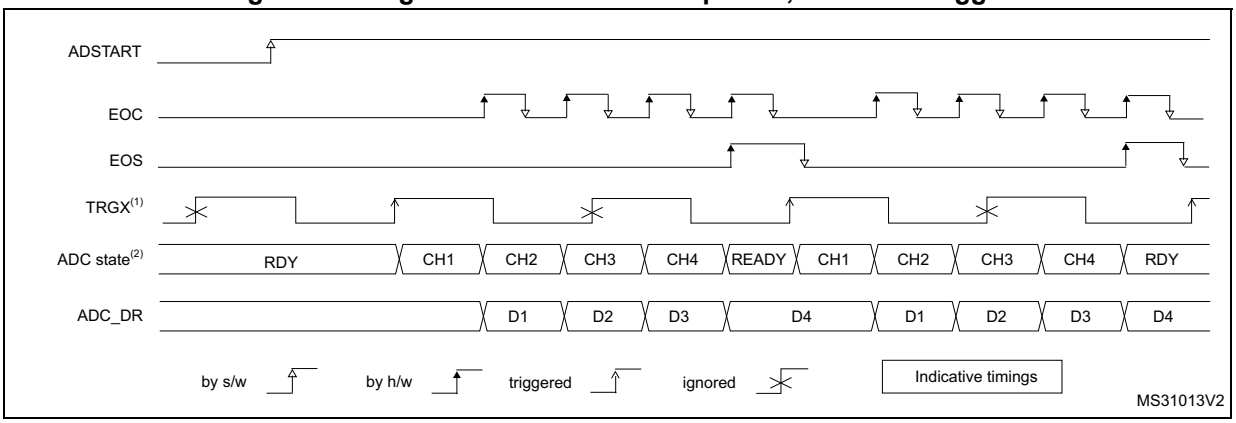

1. TRGx (over-frequency) is selected as trigger source, EXTEN[1:0] = 01, CONT = 0
2. Channels selected = 1, 2, 3, 4; AUTDLY=0.

Figure 95. Continuous conversions of a sequence, hardware trigger

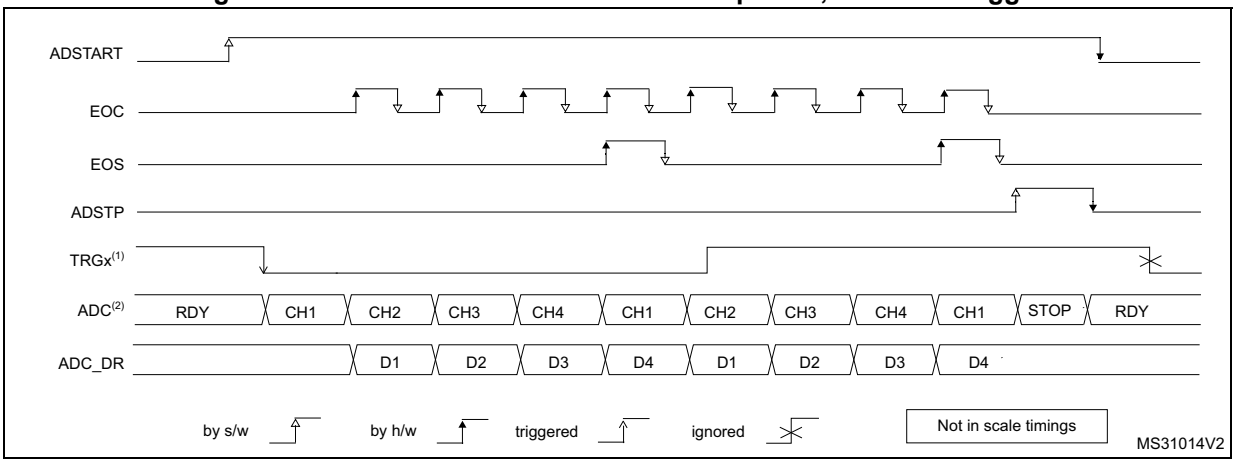

1. TRGx is selected as trigger source, EXTEN[1:0] = 10, CONT = 1
2. Channels selected = 1, 2, 3, 4; AUTDLY=0.

18.4.26 Data management

Data register, data alignment and offset (ADC_DR, OFFSETy, OFFSETy_CH, ALIGN)

Data and alignment

At the end of each regular conversion channel (when EOC event occurs), the result of the converted data is stored into the ADC_DR data register which is 16 bits wide.

At the end of each injected conversion channel (when JEOC event occurs), the result of the converted data is stored into the corresponding ADC_JDRy data register which is 16 bits wide.

The ALIGN bit in the ADC_CFGR register selects the alignment of the data stored after conversion. Data can be right- or left-aligned as shown in *Figure 96*, *Figure 97*, *Figure 98* and *Figure 99*.

Special case: when left-aligned, the data are aligned on a half-word basis except when the resolution is set to 6-bit. In that case, the data are aligned on a byte basis as shown in *Figure 98* and *Figure 99*.

Note: Left-alignment is not supported in oversampling mode. When ROVSE and/or JOVSE bit is set, the ALIGN bit value is ignored and the ADC only provides right-aligned data.

Offset

An offset y (y=1,2,3,4) can be applied to a channel by setting the bit OFFSETy_EN=1 into ADC_OFRy register. The channel to which the offset will be applied is programmed into the bits OFFSETy_CH[4:0] of ADC_OFRy register. In this case, the converted value is decreased by the user-defined offset written in the bits OFFSETy[11:0]. The result may be a negative value so the read data is signed and the SEXT bit represents the extended sign value.

Note: Offset correction is not supported in oversampling mode. When ROVSE and/or JOVSE bit is set, the value of the OFFSETy_EN bit in ADC_OFRy register is ignored (considered as reset).

Table 113 describes how the comparison is performed for all the possible resolutions for analog watchdog 1.

Table 111. Offset computation versus data resolution

Resolution (bits RES[1:0])	Subtraction between raw converted data and offset		Result	Comments
	Raw converted Data, left aligned	Offset		
00: 12-bit	DATA[11:0]	OFFSET[11:0]	Signed 12-bit data	-
01: 10-bit	DATA[11:2],00	OFFSET[11:0]	Signed 10-bit data	The user must configure OFFSET[1:0] to “00”

Table 111. Offset computation versus data resolution (continued)

Resolution (bits RES[1:0])	Subtraction between raw converted data and offset		Result	Comments
	Raw converted Data, left aligned	Offset		
10: 8-bit	DATA[11:4],0000	OFFSET[11:0]	Signed 8-bit data	The user must configure OFFSET[3:0] to “0000”
11: 6-bit	DATA[11:6],000000	OFFSET[11:0]	Signed 6-bit data	The user must configure OFFSET[5:0] to “000000”

When reading data from ADC_DR (regular channel) or from ADC_JDRy (injected channel, y=1,2,3,4) corresponding to the channel “i”:

- If one of the offsets is enabled (bit OFFSETy_EN=1) for the corresponding channel, the read data is signed.
- If none of the four offsets is enabled for this channel, the read data is not signed.

Figure 96, *Figure 97*, *Figure 98* and *Figure 99* show alignments for signed and unsigned data.

Figure 96. Right alignment (offset disabled, unsigned value)

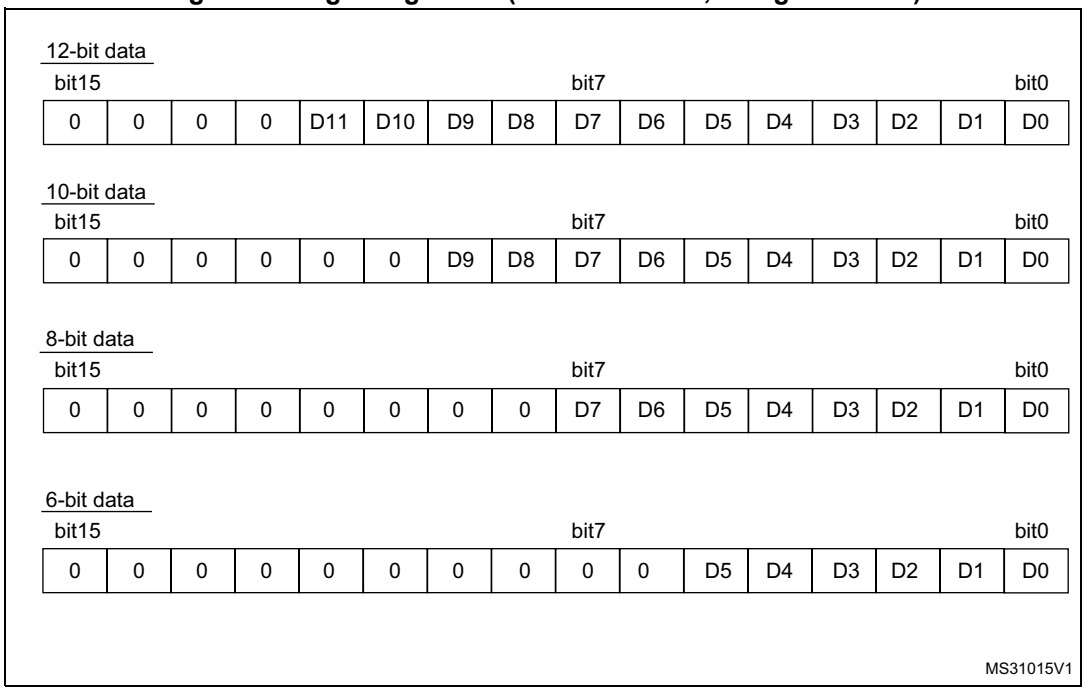

Figure 97. Right alignment (offset enabled, signed value)

12-bit data

bit15								bit7							bit0
SEXT	SEXT	SEXT	SEXT	D11	D10	D9	D8	D7	D6	D5	D4	D3	D2	D1	D0

10-bit data

bit15								bit7							bit0
SEXT	SEXT	SEXT	SEXT	SEXT	SEXT	D9	D8	D7	D6	D5	D4	D3	D2	D1	D0

8-bit data

bit15								bit7							bit0
SEXT	SEXT	SEXT	SEXT	SEXT	SEXT	SEXT	SEXT	D7	D6	D5	D4	D3	D2	D1	D0

6-bit data

bit15								bit7							bit0
SEXT	SEXT	SEXT	SEXT	SEXT	SEXT	SEXT	SEXT	SEXT	SEXT	D5	D4	D3	D2	D1	D0

MS31016V1

Figure 98. Left alignment (offset disabled, unsigned value)

12-bit data

bit15								bit7							bit0
D11	D10	D9	D8	D7	D6	D5	D4	D3	D2	D1	D0	0	0	0	0

10-bit data

bit15								bit7							bit0
D9	D8	D7	D6	D5	D4	D3	D2	D1	D0	0	0	0	0	0	0

8-bit data

bit15								bit7							bit0
D7	D6	D5	D4	D3	D2	D1	D0	0	0	0	0	0	0	0	0

6-bit data

bit15								bit7							bit0
0	0	0	0	0	0	0	0	D5	D4	D3	D2	D1	D0	0	0

MS31017V1

Figure 99. Left alignment (offset enabled, signed value)

12-bit data

bit15								bit7							bit0
SEXT	D11	D10	D9	D8	D7	D6	D5	D4	D3	D2	D1	D0	0	0	0

10-bit data

bit15								bit7							bit0
SEXT	D9	D8	D7	D6	D5	D4	D3	D2	D1	D0	0	0	0	0	0

8-bit data

bit15								bit7							bit0
SEXT	D7	D6	D5	D4	D3	D2	D1	D0	0	0	0	0	0	0	0

6-bit data

bit15								bit7							bit0
SEXT	SEXT	SEXT	SEXT	SEXT	SEXT	SEXT	SEXT	SEXT	D5	D4	D3	D2	D1	D0	0

MS31018V1

ADC overrun (OVR, OVRMOD)

The overrun flag (OSR) notifies of that a buffer overrun event occurred when the regular converted data has not been read (by the CPU or the DMA) before new converted data became available.

The OVR flag is set if the EOC flag is still 1 at the time when a new conversion completes. An interrupt can be generated if bit OVRIE=1.

When an overrun condition occurs, the ADC is still operating and can continue converting unless the software decides to stop and reset the sequence by setting bit ADSTP=1.

OVR flag is cleared by software by writing 1 to it.

It is possible to configure if data is preserved or overwritten when an overrun event occurs by programming the control bit OVRMOD:

- OVRMOD=0: The overrun event preserves the data register from being overrun: the old data is maintained and the new conversion is discarded and lost. If OVR remains at 1, any further conversions will occur but the result data will be also discarded.
- OVRMOD=1: The data register is overwritten with the last conversion result and the previous unread data is lost. If OVR remains at 1, any further conversions will operate normally and the ADC_DR register will always contain the latest converted data.

Figure 100. Example of overrun (OVR)

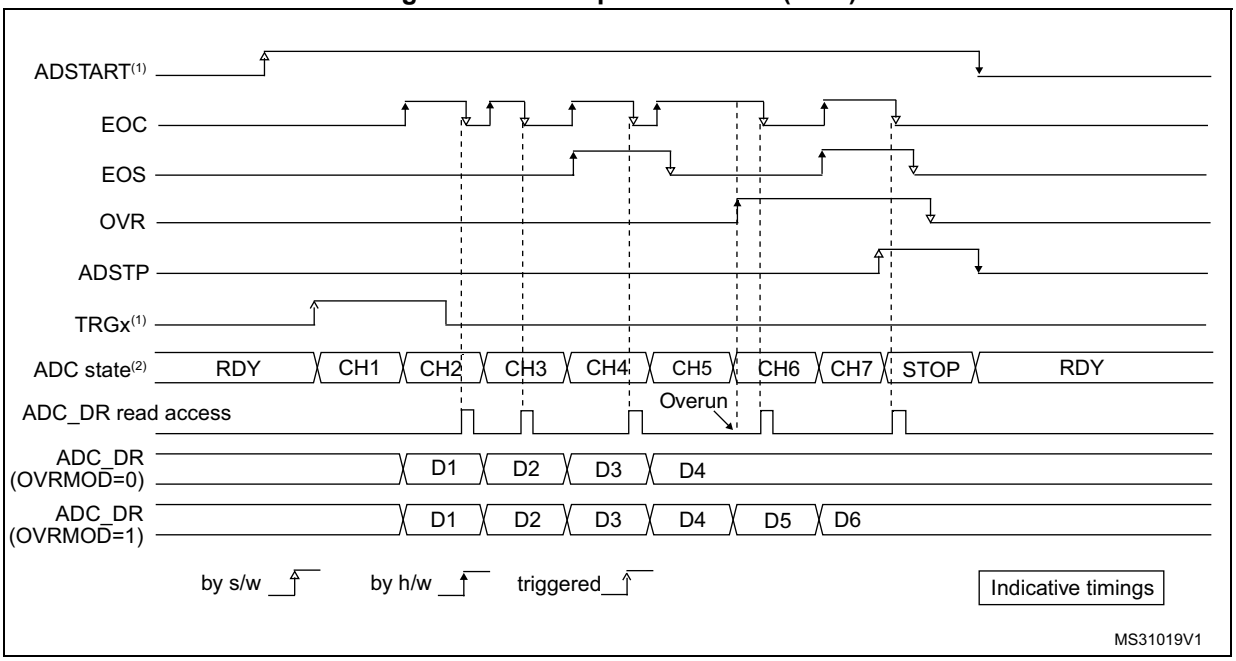

Note: There is no overrun detection on the injected channels since there is a dedicated data register for each of the four injected channels.

Managing a sequence of conversions without using the DMA

If the conversions are slow enough, the conversion sequence can be handled by the software. In this case the software must use the EOC flag and its associated interrupt to handle each data. Each time a conversion is complete, EOC is set and the ADC_DR register can be read. OVRMOD should be configured to 0 to manage overrun events as an error.

Managing conversions without using the DMA and without overrun

It may be useful to let the ADC convert one or more channels without reading the data each time (if there is an analog watchdog for instance). In this case, the OVRMOD bit must be configured to 1 and OVR flag should be ignored by the software. An overrun event will not prevent the ADC from continuing to convert and the ADC_DR register will always contain the latest conversion.

Managing conversions using the DMA

Since converted channel values are stored into a unique data register, it is useful to use DMA for conversion of more than one channel. This avoids the loss of the data already stored in the ADC_DR register.

When the DMA mode is enabled (DMAEN bit set to 1 in the ADC_CFGR register in single ADC mode or MDMA different from 0b00 in dual ADC mode), a DMA request is generated after each conversion of a channel. This allows the transfer of the converted data from the ADC_DR register to the destination location selected by the software.

Despite this, if an overrun occurs (OVR=1) because the DMA could not serve the DMA transfer request in time, the ADC stops generating DMA requests and the data corresponding to the new conversion is not transferred by the DMA. Which means that all the data transferred to the RAM can be considered as valid.

Depending on the configuration of OVRMOD bit, the data is either preserved or overwritten (refer to *Section : ADC overrun (OVR, OVRMOD)*).

The DMA transfer requests are blocked until the software clears the OVR bit.

Two different DMA modes are proposed depending on the application use and are configured with bit DMACFG of the ADC_CFGR register in single ADC mode, or with bit DMACFG of the ADC_CCR register in dual ADC mode:

- DMA one shot mode (DMACFG=0).
  This mode is suitable when the DMA is programmed to transfer a fixed number of data.
- DMA circular mode (DMACFG=1)
  This mode is suitable when programming the DMA in circular mode.

DMA one shot mode (DMACFG=0)

In this mode, the ADC generates a DMA transfer request each time a new conversion data is available and stops generating DMA requests once the DMA has reached the last DMA transfer (when DMA_EOT interrupt occurs - refer to DMA paragraph) even if a conversion has been started again.

When the DMA transfer is complete (all the transfers configured in the DMA controller have been done):

- The content of the ADC data register is frozen.
- Any ongoing conversion is aborted with partial result discarded.
- No new DMA request is issued to the DMA controller. This avoids generating an overrun error if there are still conversions which are started.
- Scan sequence is stopped and reset.
- The DMA is stopped.

DMA circular mode (DMACFG=1)

In this mode, the ADC generates a DMA transfer request each time a new conversion data is available in the data register, even if the DMA has reached the last DMA transfer. This allows configuring the DMA in circular mode to handle a continuous analog input data stream.

18.4.27 Managing conversions using the DFSDM

The ADC conversion results can be transferred directly to the Digital filter for sigma delta modulators (DFSDM).

In this case, the DFSDMCFG bit must be set to 1 and DMAEN bit must be cleared to 0.

The ADC transfers all the 16 bits of the regular data register to the DFSDM and resets the EOC flag once the transfer is complete.

The data format must be 16-bit signed:

ADC_DR[15:12] = sign extended

ADC_DR[11] = sign

ADC_DR[11:0] = data

To obtain 16-bit signed format in 12-bit ADC mode, the software needs to configure the OFFSETy[11:0] to 0x800 after having set OFFSETy_EN to 1.

Only right aligned data format is available for the DFSDM interface (see *Figure 97: Right alignment (offset enabled, signed value)*).

18.4.28 Dynamic low-power features

Auto-delayed conversion mode (AUTDLY)

The ADC implements an auto-delayed conversion mode controlled by the AUTDLY configuration bit. Auto-delayed conversions are useful to simplify the software as well as to optimize performance of an application clocked at low frequency where there would be risk of encountering an ADC overrun.

When AUTDLY=1, a new conversion can start only if all the previous data of the same group has been treated:

- For a regular conversion: once the ADC_DR register has been read or if the EOC bit has been cleared (see *Figure 101*).
- For an injected conversion: when the JEOS bit has been cleared (see *Figure 102*).

This is a way to automatically adapt the speed of the ADC to the speed of the system which will read the data.

The delay is inserted after each regular conversion (whatever DISCEN=0 or 1) and after each sequence of injected conversions (whatever JDISCEN=0 or 1).

Note: There is no delay inserted between each conversions of the injected sequence, except after the last one.

During a conversion, a hardware trigger event (for the same group of conversions) occurring during this delay is ignored.

Note: This is not true for software triggers where it remains possible during this delay to set the bits ADSTART or JADSTART to restart a conversion: it is up to the software to read the data before launching a new conversion.

No delay is inserted between conversions of different groups (a regular conversion followed by an injected conversion or conversely):

- If an injected trigger occurs during the automatic delay of a regular conversion, the injected conversion starts immediately (see *Figure 102*).
- Once the injected sequence is complete, the ADC waits for the delay (if not ended) of the previous regular conversion before launching a new regular conversion (see *Figure 104*).

The behavior is slightly different in auto-injected mode (JAUTO=1) where a new regular conversion can start only when the automatic delay of the previous injected sequence of conversion has ended (when JEOS has been cleared). This is to ensure that the software can read all the data of a given sequence before starting a new sequence (see *Figure 105*).

To stop a conversion in continuous auto-injection mode combined with autodelay mode (JAUTO=1, CONT=1 and AUTDLY=1), follow the following procedure:

1. Wait until JEOS=1 (no more conversions are restarted)
2. Clear JEOS,
3. Set ADSTP=1
4. Read the regular data.

If this procedure is not respected, a new regular sequence can restart if JEOS is cleared after ADSTP has been set.

In AUTDLY mode, a hardware regular trigger event is ignored if it occurs during an already ongoing regular sequence or during the delay that follows the last regular conversion of the sequence. It is however considered pending if it occurs after this delay, even if it occurs during an injected sequence of the delay that follows it. The conversion then starts at the end of the delay of the injected sequence.

In AUTDLY mode, a hardware injected trigger event is ignored if it occurs during an already ongoing injected sequence or during the delay that follows the last injected conversion of the sequence.

Figure 101. AUTODLY=1, regular conversion in continuous mode, software trigger

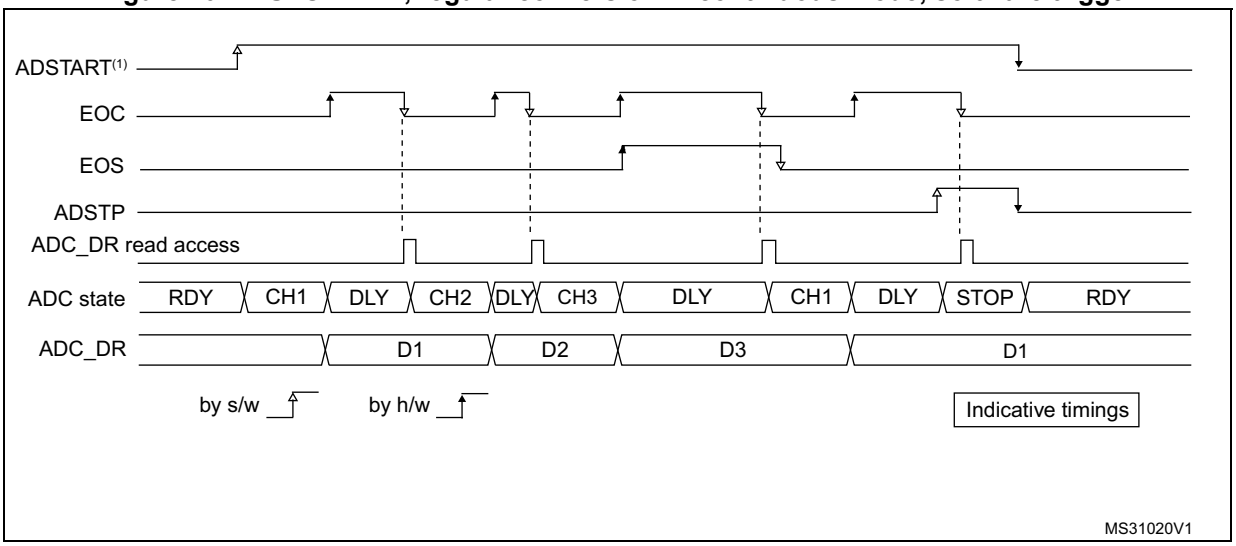

1. AUTDLY=1
2. Regular configuration: EXTEN[1:0]=00 (SW trigger), CONT=1, CHANNELS = 1,2,3
3. Injected configuration DISABLED

Figure 102. AUTODLY=1, regular HW conversions interrupted by injected conversions (DISCEN=0; JDISCEN=0)

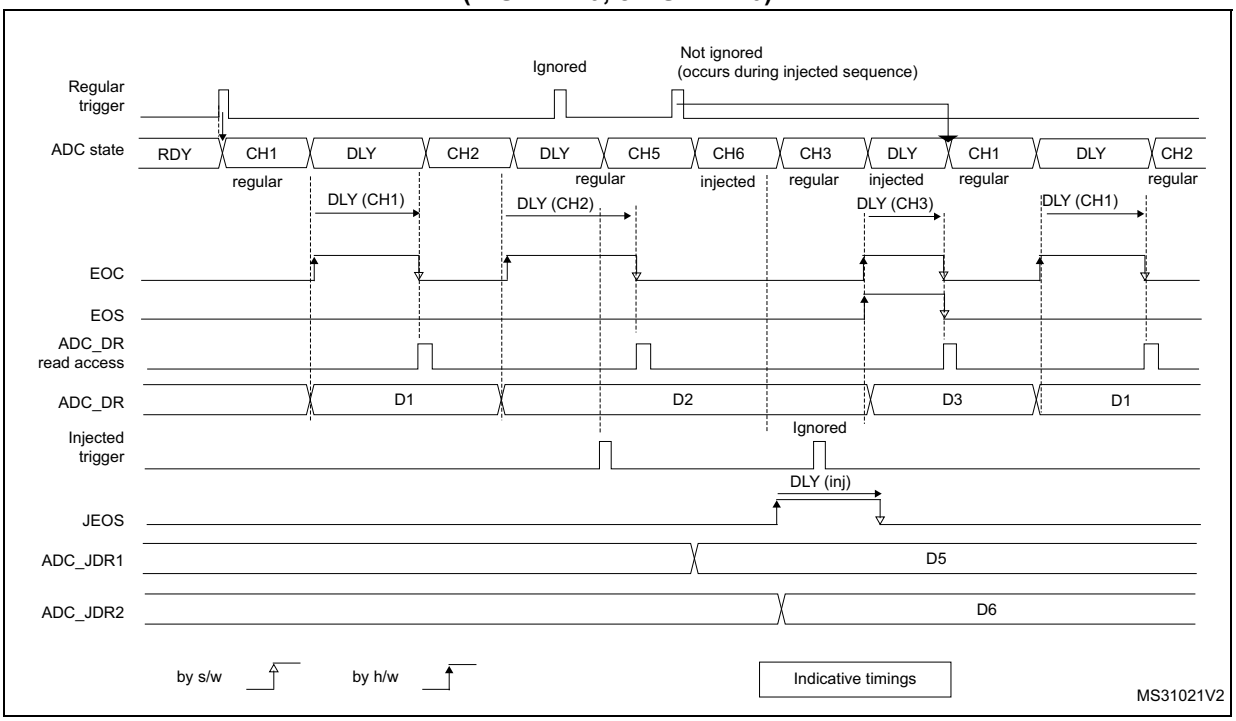

1. AUTDLY=1
2. Regular configuration: EXTEN[1:0]=01 (HW trigger), CONT=0, DISCEN=0, CHANNELS = 1, 2, 3
3. Injected configuration: JEXTEN[1:0]=01 (HW Trigger), JDISCEN=0, CHANNELS = 5,6

Figure 103. AUTODLY=1, regular HW conversions interrupted by injected conversions (DISCEN=1, JDISCEN=1)

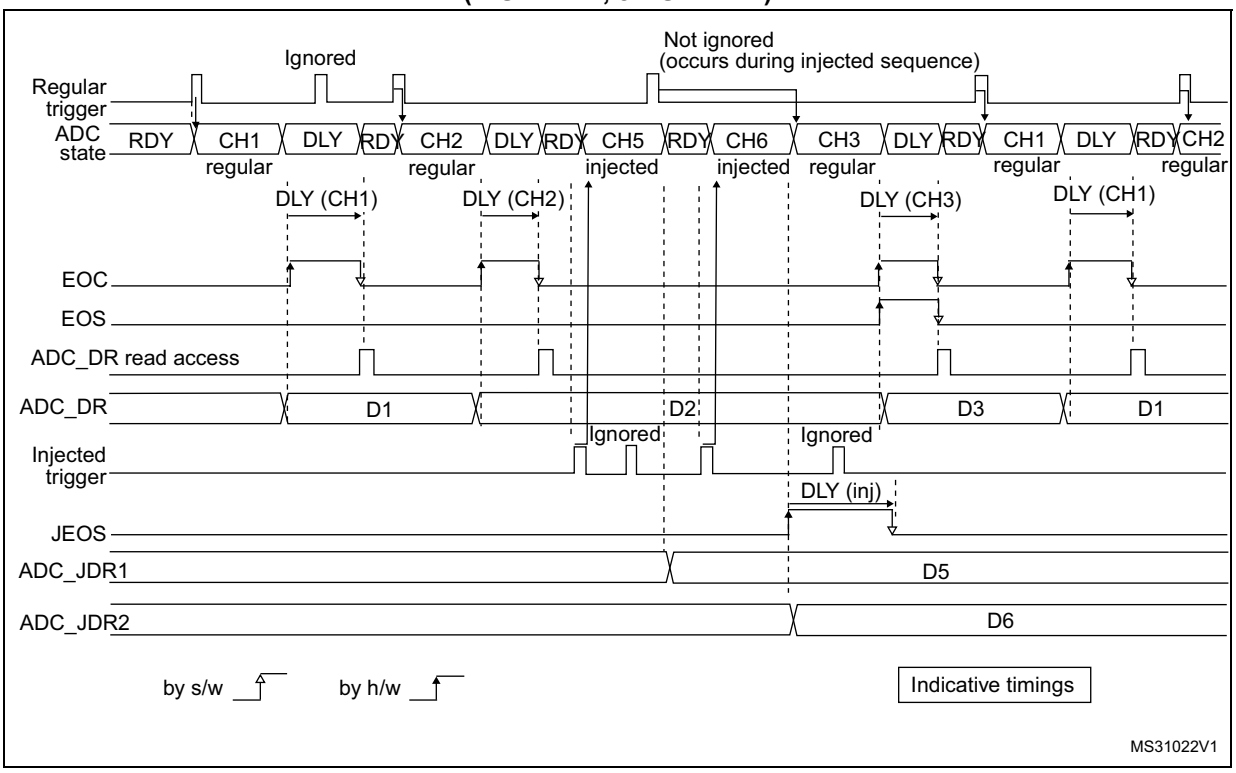

1. AUTDLY=1
2. Regular configuration: EXTEN[1:0]=01 (HW trigger), CONT=0, DISCEN=1, DISCNUM=1, CHANNELS = 1, 2, 3.
3. Injected configuration: JEXTEN[1:0]=01 (HW Trigger), JDISCEN=1, CHANNELS = 5,6

Figure 104. AUTODLY=1, regular continuous conversions interrupted by injected conversions

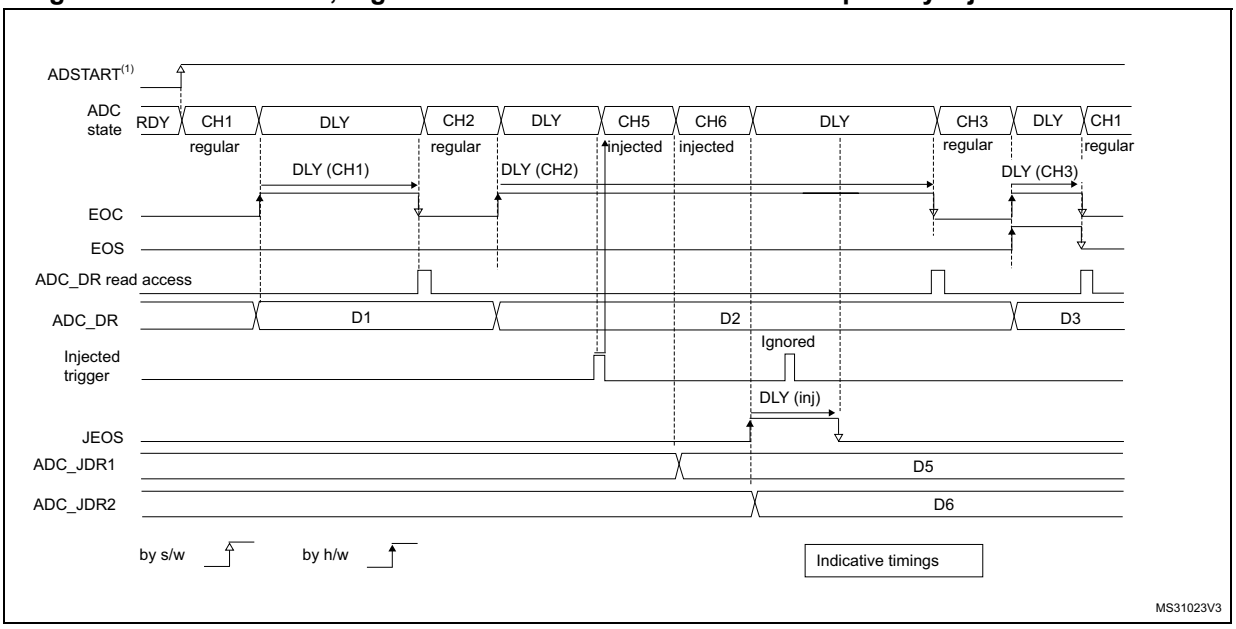

1. AUTDLY=1
2. Regular configuration: EXTEN[1:0]=00 (SW trigger), CONT=1, DISCEN=0, CHANNELS = 1, 2, 3
3. Injected configuration: JEXTEN[1:0]=01 (HW Trigger), JDISCEN=0, CHANNELS = 5,6

Figure 105. AUTODLY=1 in auto- injected mode (JAUTO=1)

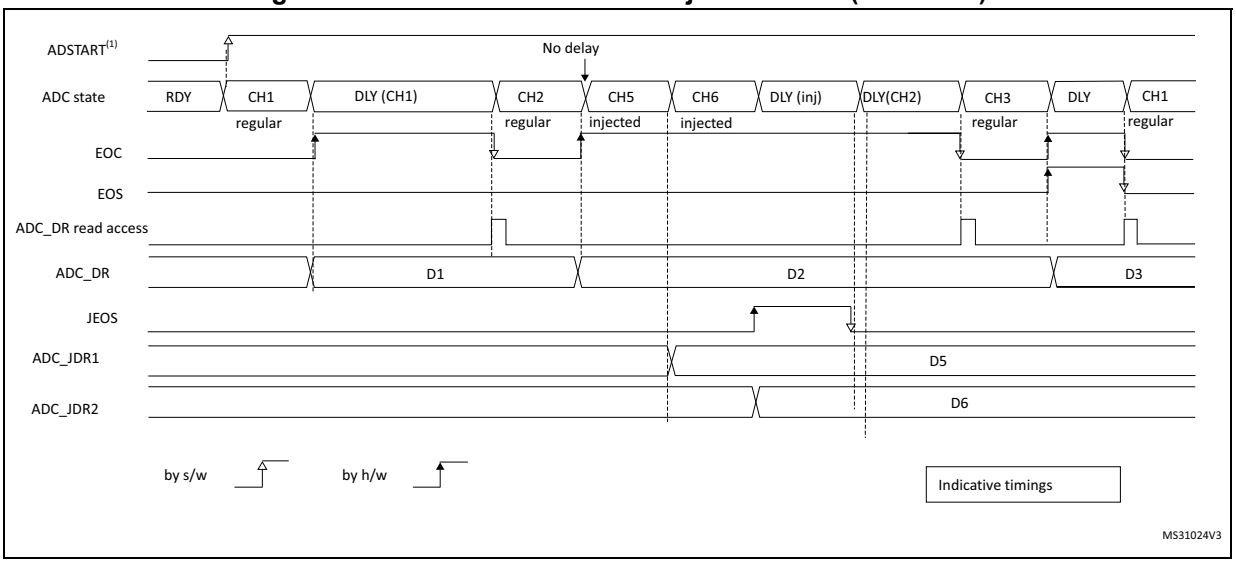

1. AUTDLY=1
2. Regular configuration: EXTEN[1:0]=00 (SW trigger), CONT=1, DISCEN=0, CHANNELS = 1, 2
3. Injected configuration: JAUTO=1, CHANNELS = 5,6

18.4.29 Analog window watchdog (AWD1EN, JAWD1EN, AWD1SGL, AWD1CH, AWD2CH, AWD3CH, AWD_HTx, AWD_LTx, AWDx)

The three AWD analog watchdogs monitor whether some channels remain within a configured voltage range (window).

Figure 106. Analog watchdog guarded area

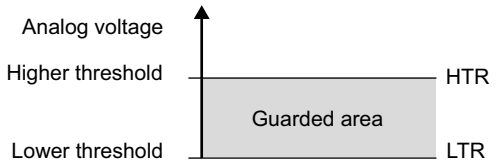

AWDx flag and interrupt

An interrupt can be enabled for each of the 3 analog watchdogs by setting AWDxIE in the ADC_IER register (x=1,2,3).

AWDx (x=1,2,3) flag is cleared by software by writing 1 to it.

The ADC conversion result is compared to the lower and higher thresholds before alignment.

Description of analog watchdog 1

The AWD analog watchdog 1 is enabled by setting the AWD1EN bit in the ADC_CFGR register. This watchdog monitors whether either one selected channel or all enabled channels(1) remain within a configured voltage range (window).

Table 112 shows how the ADC_CFGR registers should be configured to enable the analog watchdog on one or more channels.

Table 112. Analog watchdog channel selection

Channels guarded by the analog watchdog	AWD1SGL bit	AWD1EN bit	JAWD1EN bit
None	x	0	0
All injected channels	0	0	1
All regular channels	0	1	0
All regular and injected channels	0	1	1
Single(1) injected channel	1	0	1
Single(1) regular channel	1	1	0
Single(1) regular or injected channel	1	1	1

1. Selected by the AWD1CH[4:0] bits. The channels must also be programmed to be converted in the appropriate regular or injected sequence.

The AWD1 analog watchdog status bit is set if the analog voltage converted by the ADC is below a lower threshold or above a higher threshold.

These thresholds are programmed in bits HT1[11:0] and LT1[11:0] of the ADC_TR1 register for the analog watchdog 1. When converting data with a resolution of less than 12 bits (according to bits RES[1:0]), the LSB of the programmed thresholds must be kept cleared because the internal comparison is always performed on the full 12-bit raw converted data (left aligned).

Table 113 describes how the comparison is performed for all the possible resolutions for analog watchdog 1.

Table 113. Analog watchdog 1 comparison

Resolution(bit RES[1:0])	Analog watchdog comparison between:		Comments
	Raw converted data, left aligned	Thresholds	
00: 12-bit	DATA[11:0]	LT1[11:0] and HT1[11:0]	-
01: 10-bit	DATA[11:2],00	LT1[11:0] and HT1[11:0]	User must configure LT1[1:0] and HT1[1:0] to 00
10: 8-bit	DATA[11:4],0000	LT1[11:0] and HT1[11:0]	User must configure LT1[3:0] and HT1[3:0] to 0000
11: 6-bit	DATA[11:6],000000	LT1[11:0] and HT1[11:0]	User must configure LT1[5:0] and HT1[5:0] to 000000

Description of analog watchdog 2 and 3

The second and third analog watchdogs are more flexible and can guard several selected channels by programming the corresponding bits in AWDxCH[18:0] (x=2,3).

The corresponding watchdog is enabled when any bit of AWDxCH[18:0] (x=2,3) is set.

They are limited to a resolution of 8 bits and only the 8 MSBs of the thresholds can be programmed into HTx[7:0] and LTx[7:0]. *Table 114* describes how the comparison is performed for all the possible resolutions.

Table 114. Analog watchdog 2 and 3 comparison

Resolution (bits RES[1:0])	Analog watchdog comparison between:		Comments
	Raw converted data, left aligned	Thresholds	
00: 12-bit	DATA[11:4]	LTx[7:0] and HTx[7:0]	DATA[3:0] are not relevant for the comparison
01: 10-bit	DATA[11:4]	LTx[7:0] and HTx[7:0]	DATA[3:2] are not relevant for the comparison
10: 8-bit	DATA[11:4]	LTx[7:0] and HTx[7:0]	-
11: 6-bit	DATA[11:6],00	LTx[7:0] and HTx[7:0]	User must configure LTx[1:0] and HTx[1:0] to 00

ADCy_AWDx_OUT signal output generation

Each analog watchdog is associated to an internal hardware signal ADCy_AWDx_OUT (y=ADC number, x=watchdog number) which is directly connected to the ETR input (external trigger) of some on-chip timers. Refer to the on-chip timers section to understand how to select the ADCy_AWDx_OUT signal as ETR.

ADCy_AWDx_OUT is activated when the associated analog watchdog is enabled:

- ADCy_AWDx_OUT is set when a guarded conversion is outside the programmed thresholds.
- ADCy_AWDx_OUT is reset after the end of the next guarded conversion which is inside the programmed thresholds (It remains at 1 if the next guarded conversions are still outside the programmed thresholds).
- ADCy_AWDx_OUT is also reset when disabling the ADC (when setting ADDIS=1). Note that stopping regular or injected conversions (setting ADSTP=1 or JADSTP=1) has no influence on the generation of ADCy_AWDx_OUT.

Note: AWDx flag is set by hardware and reset by software: AWDx flag has no influence on the generation of ADCy_AWDx_OUT (ex: ADCy_AWDx_OUT can toggle while AWDx flag remains at 1 if the software did not clear the flag).

Figure 107. ADCy_AWDx_OUT signal generation (on all regular channels)

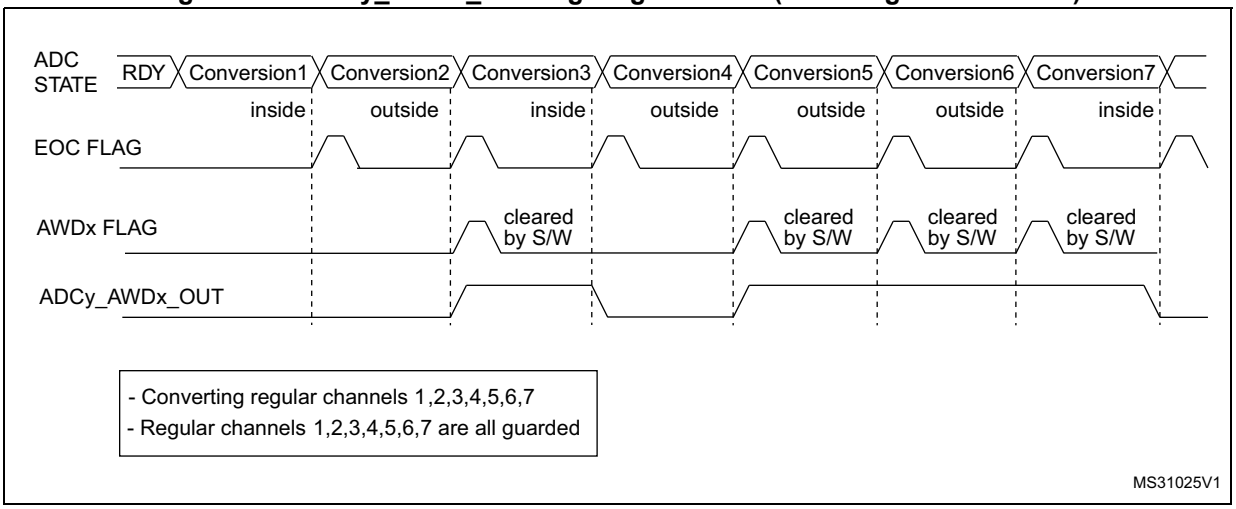

Figure 108. ADCy_AWDx_OUT signal generation (AWDx flag not cleared by software)

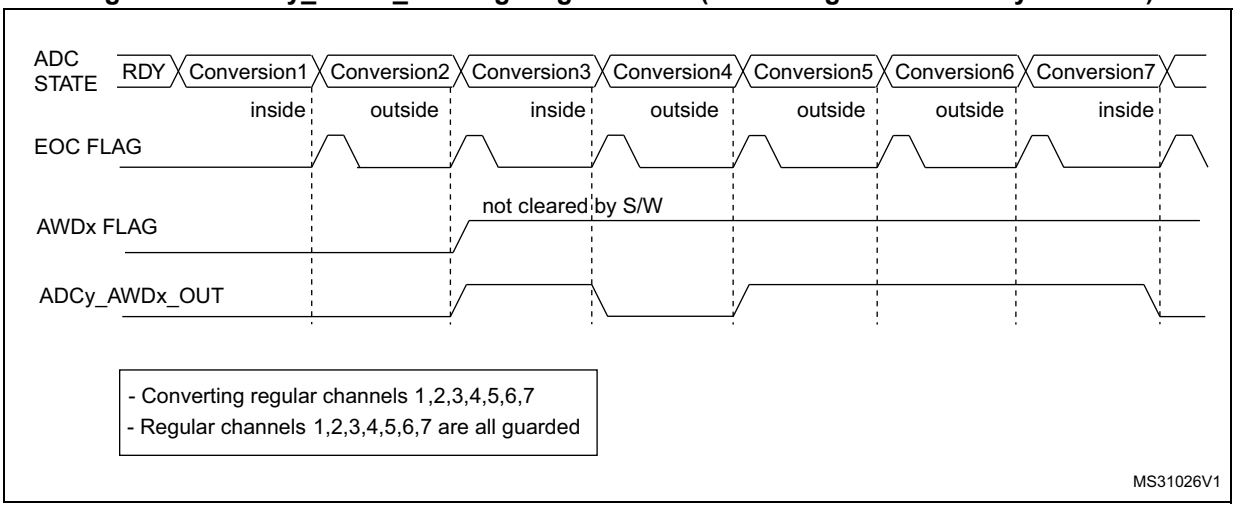

Figure 109. ADCy_AWDx_OUT signal generation (on a single regular channel)

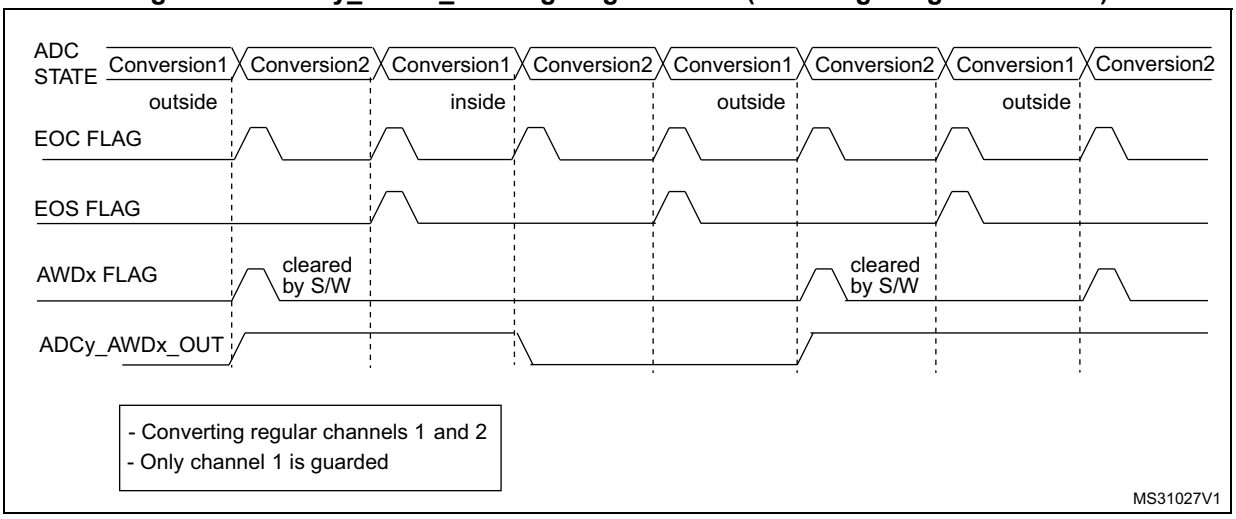

Figure 110. ADCy_AWDx_OUT signal generation (on all injected channels)

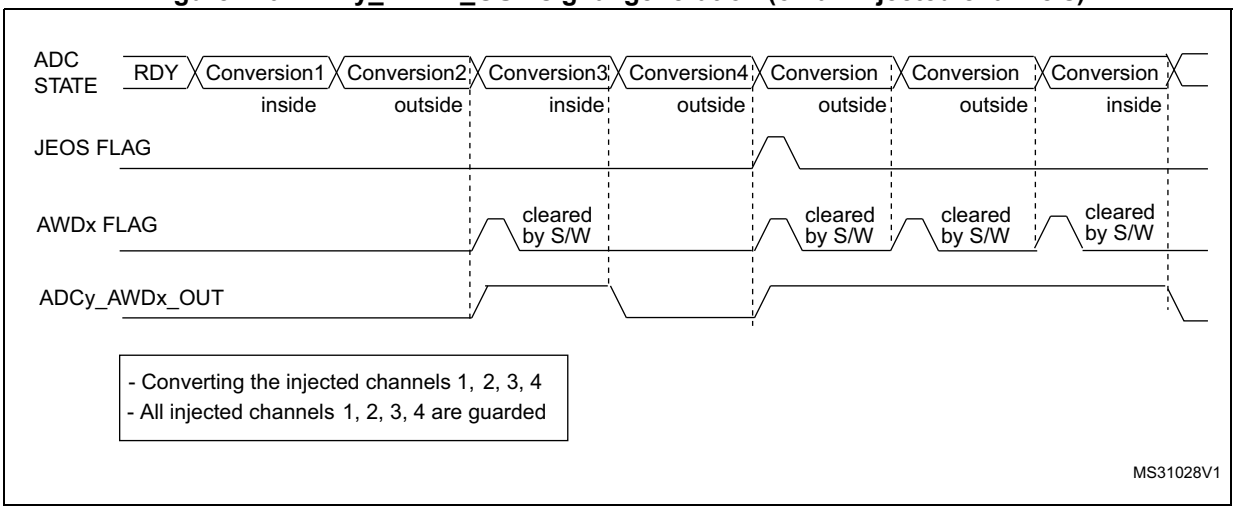

18.4.30 Oversampler

The oversampling unit performs data pre-processing to offload the CPU. It is able to handle multiple conversions and average them into a single data with increased data width, up to 16-bit.

It provides a result with the following form, where N and M can be adjusted:

$$\text{Result} = \frac{1}{M} \times \sum_{n=0}^{n=N-1} \text{Conversion}(t_n)$$

It allows to perform by hardware the following functions: averaging, data rate reduction, SNR improvement, basic filtering.

The oversampling ratio N is defined using the OVFS[2:0] bits in the ADC_CFGR2 register, and can range from 2x to 256x. The division coefficient M consists of a right bit shift up to 8 bits, and is defined using the OVSS[3:0] bits in the ADC_CFGR2 register.

The summation unit can yield a result up to 20 bits (256x 12-bit results), which is first shifted right. It is then truncated to the 16 least significant bits, rounded to the nearest value using the least significant bits left apart by the shifting, before being finally transferred into the ADC_DR data register.

Note: If the intermediary result after the shifting exceeds 16-bit, the result is truncated as is, without saturation.

Figure 111. 20-bit to 16-bit result truncation

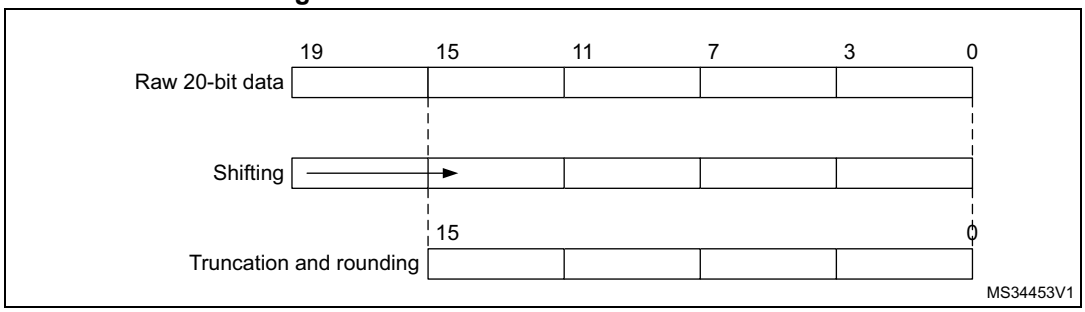

Figure 112 gives a numerical example of the processing, from a raw 20-bit accumulated data to the final 16-bit result.

Figure 112. Numerical example with 5-bit shift and rounding

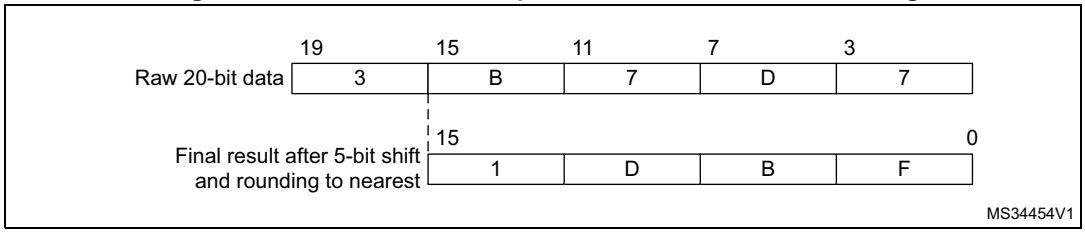

Table 115 gives the data format for the various N and M combinations, for a raw conversion data equal to 0xFFF.

Table 115. Maximum output results versus N and M (gray cells indicate truncation)

Over sampling ratio	Max Raw data	No-shift OVSS = 0000	1-bit shift OVSS = 0001	2-bit shift OVSS = 0010	3-bit shift OVSS = 0011	4-bit shift OVSS = 0100	5-bit shift OVSS = 0101	6-bit shift OVSS = 0110	7-bit shift OVSS = 0111	8-bit shift OVSS = 1000
2x	0x1FFE	0x1FFE	0x0FFF	0x0800	0x0400	0x0200	0x0100	0x0080	0x0040	0x020
4x	0x3FFC	0x3FFC	0x1FFE	0x0FFF	0x0800	0x0400	0x0200	0x0100	0x0080	0x0040
8x	0x7FF8	0x7FF8	0x3FFC	0x1FFE	0x0FFF	0x0800	0x0400	0x0200	0x0100	0x0080
16x	0xFFF0	0xFFF0	0x7FF8	0x3FFC	0x1FFE	0x0FFF	0x0800	0x0400	0x0200	0x0100
32x	0x1FFE0	0xFFE0	0xFFF0	0x7FF8	0x3FFC	0x1FFE	0x0FFF	0x0800	0x0400	0x0200
64x	0x3FFC0	0xFFC0	0xFFE0	0xFFF0	0x7FF8	0x3FFC	0x1FFE	0x0FFF	0x0800	0x0400
128x	0x7FF80	0xFF80	0xFFC0	0xFFE0	0xFFF0	0x7FF8	0x3FFC	0x1FFE	0x0FFF	0x0800
256x	0xFFF00	0xFF00	0xFF80	0xFFC0	0xFFE0	0xFFF0	0x7FF8	0x3FFC	0x1FFE	0x0FFF

There are no changes for conversion timings in oversampled mode: the sample time is maintained equal during the whole oversampling sequence. A new data is provided every N conversions, with an equivalent delay equal to N x T_{CONV} = N x (t_{SMPL} + t_{SAR}). The flags are set as follow:

- The end of the sampling phase (EOSMP) is set after each sampling phase
- The end of conversion (EOC) occurs once every N conversions, when the oversampled result is available
- The end of sequence (EOS) occurs once the sequence of oversampled data is completed (i.e. after N x sequence length conversions total)

ADC operating modes supported when oversampling (single ADC mode)

In oversampling mode, most of the ADC operating modes are maintained:

- Single or continuous mode conversions
- ADC conversions start either by software or with triggers
- ADC stop during a conversion (abort)
- Data read via CPU or DMA with overrun detection
- Low-power modes (AUTDLY)
- Programmable resolution: in this case, the reduced conversion values (as per RES[1:0] bits in ADC_CFGR1 register) are accumulated, truncated, rounded and shifted in the same way as 12-bit conversions are

Note: The alignment mode is not available when working with oversampled data. The ALIGN bit in ADC_CFGR1 is ignored and the data are always provided right-aligned.

Offset correction is not supported in oversampling mode. When ROVSE and/or JOVSE bit is set, the value of the OFFSETy_EN bit in ADC_OFRy register is ignored (considered as reset).

Analog watchdog

The analog watchdog functionality is maintained (AWDSGL and AWDEN bits), with the following difference:

- The RES[1:0] bits are ignored, comparison is always done on using the full 12-bit values HT[11:0] and LT[11:0]
- the comparison is performed on the most significant 12-bit of the 16-bit oversampled results ADC_DR[15:4]

Note: Care must be taken when using high shifting values, this will reduce the comparison range. For instance, if the oversampled result is shifted by 4 bits, thus yielding a 12-bit data right-aligned, the effective analog watchdog comparison can only be performed on 8 bits. The comparison is done between ADC_DR[11:4] and HT[0:7] / LT[[0:7], and HT[11:8] / LT[11:8] must be kept reset.

Triggered mode

The averager can also be used for basic filtering purpose. Although not a very powerful filter (slow roll-off and limited stop band attenuation), it can be used as a notch filter to reject constant parasitic frequencies (typically coming from the mains or from a switched mode power supply). For this purpose, a specific discontinuous mode can be enabled with TROVS bit in ADC_CFGR2, to be able to have an oversampling frequency defined by a user and independent from the conversion time itself.

The *Figure 113* below shows how conversions are started in response to triggers during discontinuous mode.

If the TROVS bit is set, the content of the DISCEN bit is ignored and considered as 1.

Figure 113. Triggered regular oversampling mode (TROVS bit = 1)

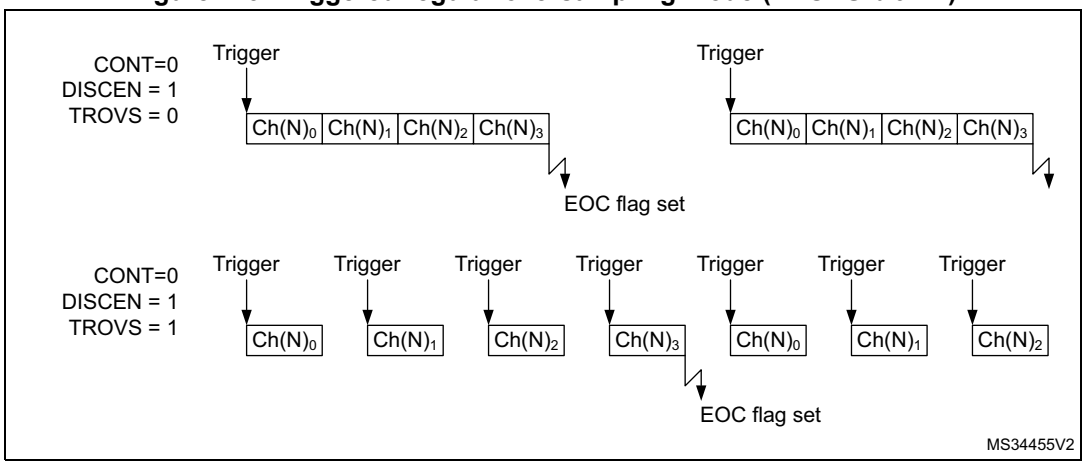

Injected and regular sequencer management when oversampling

In oversampling mode, it is possible to have differentiated behavior for injected and regular sequencers. The oversampling can be enabled for both sequencers with some limitations if they have to be used simultaneously (this is related to a unique accumulation unit).

Oversampling regular channels only

The regular oversampling mode bit ROVSM defines how the regular oversampling sequence is resumed if it is interrupted by injected conversion:

- In continued mode, the accumulation restarts from the last valid data (prior to the conversion abort request due to the injected trigger). This ensures that oversampling will be completed whatever the injection frequency (providing at least one regular conversion can be completed between triggers);
- In resumed mode, the accumulation restarts from 0 (previous conversions results are ignored). This mode allows to guarantee that all data used for oversampling were converted back-to-back within a single timeslot. Care must be taken to have a injection trigger period above the oversampling period length. If this condition is not respected, the oversampling cannot be completed and the regular sequencer will be blocked.

The *Figure 114* gives examples for a 4x oversampling ratio.

Figure 114. Regular oversampling modes (4x ratio)

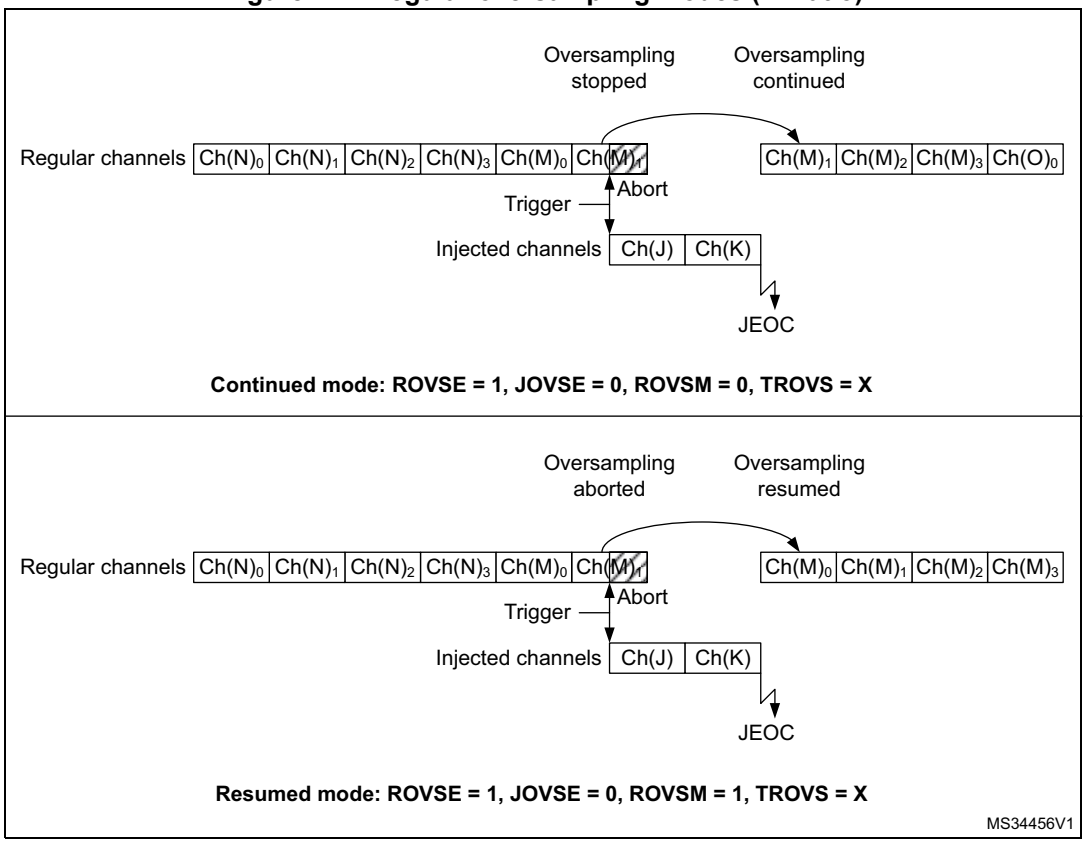

Oversampling Injected channels only

The Injected oversampling mode bit JOVSE enables oversampling solely for conversions in the injected sequencer.

Oversampling regular and Injected channels

It is possible to have both ROVSE and JOVSE bits set. In this case, the regular oversampling mode is forced to resumed mode (ROVSM bit ignored), as represented on *Figure 115* below.

Figure 115. Regular and injected oversampling modes used simultaneously

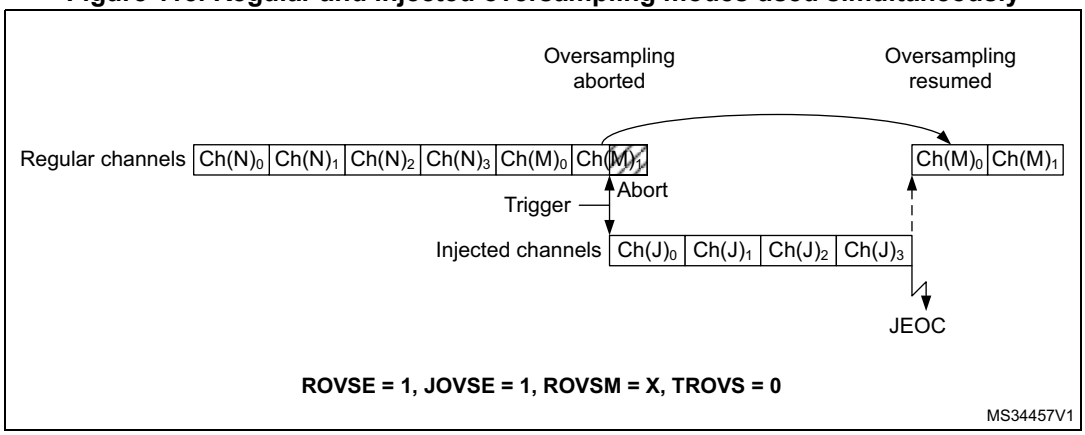

Triggered regular oversampling with injected conversions

It is possible to have triggered regular mode with injected conversions. In this case, the injected mode oversampling mode must be disabled, and the ROVSM bit is ignored (resumed mode is forced). The JOVSE bit must be reset. The behavior is represented on *Figure 116* below.

Figure 116. Triggered regular oversampling with injection

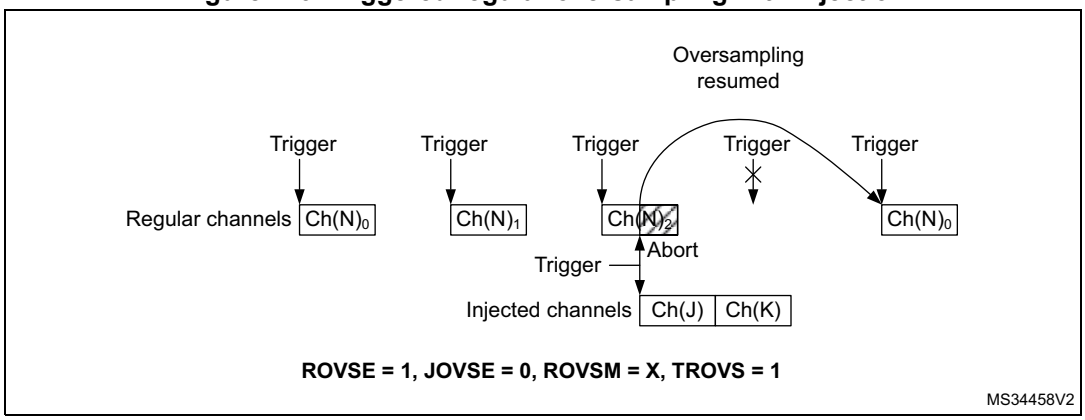

Auto-injected mode

It is possible to oversample auto-injected sequences and have all conversions results stored in registers to save a DMA resource. This mode is available only with both regular and injected oversampling active: JAUTO = 1, ROVSE = 1 and JOVSE = 1, other combinations are not supported. The ROVSM bit is ignored in auto-injected mode. The *Figure 117* below shows how the conversions are sequenced.

Figure 117. Oversampling in auto-injected mode

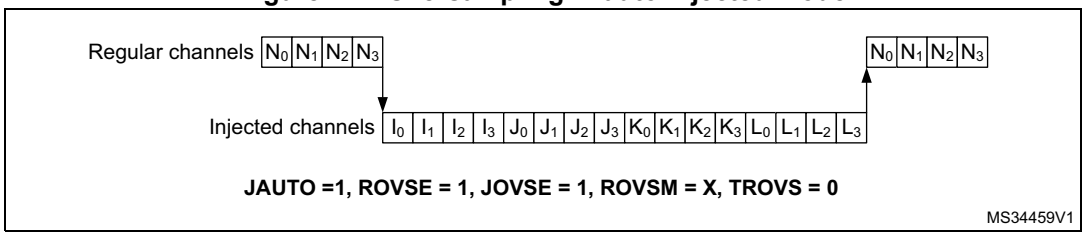

It is possible to have also the triggered mode enabled, using the TROVS bit. In this case, the ADC must be configured as following: JAUTO = 1, DISCEN = 0, JDISCEN = 0, ROVSE = 1, JOVSE = 1 and TROVSE = 1.

Dual ADC modes supported when oversampling

It is possible to have oversampling enabled when working in dual ADC configuration, for the injected simultaneous mode and regular simultaneous mode. In this case, the two ADCs must be programmed with the very same settings (including oversampling).

All other dual ADC modes are not supported when either regular or injected oversampling is enabled (ROVSE = 1 or JOVSE = 1).

Combined modes summary

The *Table 116* below summarizes all combinations, including modes not supported.

Table 116. Oversampler operating modes summary

Regular Oversampling ROVSE	Injected Oversampling JOVSE	Oversampler mode ROVSM 0 = continued 1 = resumed	Triggered Regular mode TROVS	Comment
1	0	0	0	Regular continued mode
1	0	0	1	Not supported
1	0	1	0	Regular resumed mode
1	0	1	1	Triggered regular resumed mode
1	1	0	X	Not supported
1	1	1	0	Injected and regular resumed mode
1	1	1	1	Not supported
0	1	X	X	Injected oversampling

18.4.31 Dual ADC modes

Dual ADC modes can be used in devices with two ADCs or more (see *Figure 118*).

In dual ADC mode the start of conversion is triggered alternately or simultaneously by the ADCx master to the ADC slave, depending on the mode selected by the bits DUAL[4:0] in the ADCx_CCR register.

Four possible modes are implemented:

- Injected simultaneous mode
- Regular simultaneous mode
- Interleaved mode
- Alternate trigger mode

It is also possible to use these modes combined in the following ways:

- Injected simultaneous mode + Regular simultaneous mode
- Regular simultaneous mode + Alternate trigger mode
- Injected simultaneous mode + Interleaved mode

In dual ADC mode (when bits DUAL[4:0] in ADCx_CCR register are not equal to zero), the bits CONT, AUTDLY, DISCEN, DISCNUM[2:0], JDISCEN, JQM, JAUTO of the ADC_CFGR register are shared between the master and slave ADC: the bits in the slave ADC are always equal to the corresponding bits of the master ADC.

To start a conversion in dual mode, the user must program the bits EXTEN[1:0], EXTSEL, JEXTEN[1:0], JEXTSEL of the master ADC only, to configure a software or hardware trigger, and a regular or injected trigger. (the bits EXTEN[1:0] and JEXTEN[1:0] of the slave ADC are don’t care).

In regular simultaneous or interleaved modes: once the user sets bit ADSTART or bit ADSTP of the master ADC, the corresponding bit of the slave ADC is also automatically set. However, bit ADSTART or bit ADSTP of the slave ADC is not necessary cleared at the same time as the master ADC bit.

In injected simultaneous or alternate trigger modes: once the user sets bit JADSTART or bit JADSTP of the master ADC, the corresponding bit of the slave ADC is also automatically set. However, bit JADSTART or bit JADSTP of the slave ADC is not necessary cleared at the same time as the master ADC bit.

In dual ADC mode, the converted data of the master and slave ADC can be read in parallel, by reading the ADC common data register (ADCx_CDR). The status bits can be also read in parallel by reading the dual-mode status register (ADCx_CSR).

Figure 118. Dual ADC block diagram(1)

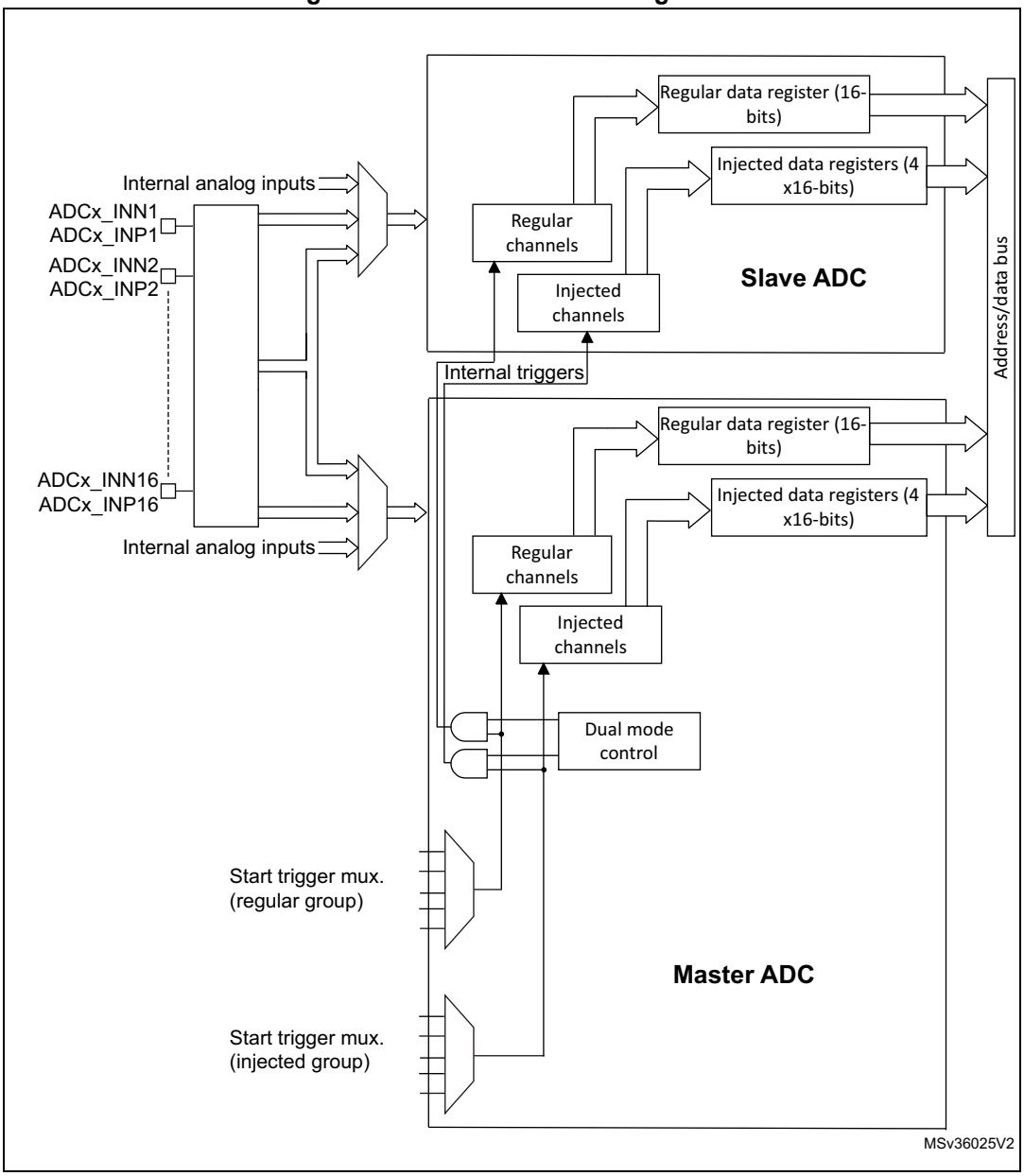

1. External triggers also exist on slave ADC but are not shown for the purposes of this diagram.
2. The ADC common data register (ADCx_CDR) contains both the master and slave ADC regular converted data.

Injected simultaneous mode

This mode is selected by programming bits DUAL[4:0]=00101

This mode converts an injected group of channels. The external trigger source comes from the injected group multiplexer of the master ADC (selected by the JEXTSEL bits in the ADC_JSQR register).

Note: Do not convert the same channel on the two ADCs (no overlapping sampling times for the two ADCs when converting the same channel).

In simultaneous mode, one must convert sequences with the same length or ensure that the interval between triggers is longer than the longer of the 2 sequences. Otherwise, the ADC with the shortest sequence may restart while the ADC with the longest sequence is completing the previous conversions.

Regular conversions can be performed on one or all ADCs. In that case, they are independent of each other and are interrupted when an injected event occurs. They are resumed at the end of the injected conversion group.

- At the end of injected sequence of conversion event (JEOS) on the master ADC, the converted data is stored into the master ADC_JDRy registers and a JEOS interrupt is generated (if enabled)
- At the end of injected sequence of conversion event (JEOS) on the slave ADC, the converted data is stored into the slave ADC_JDRy registers and a JEOS interrupt is generated (if enabled)
- If the duration of the master injected sequence is equal to the duration of the slave injected one (like in *Figure 119*), it is possible for the software to enable only one of the two JEOS interrupt (ex: master JEOS) and read both converted data (from master ADC_JDRy and slave ADC_JDRy registers).

Figure 119. Injected simultaneous mode on 4 channels: dual ADC mode

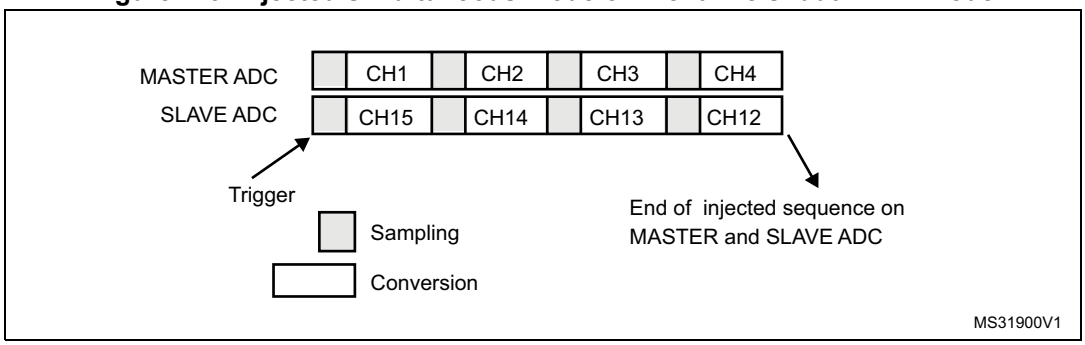

If JDISCEN=1, each simultaneous conversion of the injected sequence requires an injected trigger event to occur.

This mode can be combined with AUTDLY mode:

- Once a simultaneous injected sequence of conversions has ended, a new injected trigger event is accepted only if both JEOS bits of the master and the slave ADC have been cleared (delay phase). Any new injected trigger events occurring during the ongoing injected sequence and the associated delay phase are ignored.
- Once a regular sequence of conversions of the master ADC has ended, a new regular trigger event of the master ADC is accepted only if the master data register (ADC_DR) has been read. Any new regular trigger events occurring for the master ADC during the

ongoing regular sequence and the associated delay phases are ignored.
There is the same behavior for regular sequences occurring on the slave ADC.

Regular simultaneous mode with independent injected

This mode is selected by programming bits DUAL[4:0] = 00110.

This mode is performed on a regular group of channels. The external trigger source comes from the regular group multiplexer of the master ADC (selected by the EXTSEL bits in the ADC_CFGR register). A simultaneous trigger is provided to the slave ADC.

In this mode, independent injected conversions are supported. An injection request (either on master or on the slave) will abort the current simultaneous conversions, which are restarted once the injected conversion is completed.

Note: Do not convert the same channel on the two ADCs (no overlapping sampling times for the two ADCs when converting the same channel).

In regular simultaneous mode, one must convert sequences with the same length or ensure that the interval between triggers is longer than the longer conversion time of the 2 sequences. Otherwise, the ADC with the shortest sequence may restart while the ADC with the longest sequence is completing the previous conversions.

Software is notified by interrupts when it can read the data:

- At the end of each conversion event (EOC) on the master ADC, a master EOC interrupt is generated (if EOCIE is enabled) and software can read the ADC_DR of the master ADC.
- At the end of each conversion event (EOC) on the slave ADC, a slave EOC interrupt is generated (if EOCIE is enabled) and software can read the ADC_DR of the slave ADC.
- If the duration of the master regular sequence is equal to the duration of the slave one (like in *Figure 120*), it is possible for the software to enable only one of the two EOC interrupt (ex: master EOC) and read both converted data from the Common Data register (ADCx_CDR).

It is also possible to read the regular data using the DMA. Two methods are possible:

- Using two DMA channels (one for the master and one for the slave). In this case bits MDMA[1:0] must be kept cleared.
  - Configure the DMA master ADC channel to read ADC_DR from the master. DMA requests are generated at each EOC event of the master ADC.
  - Configure the DMA slave ADC channel to read ADC_DR from the slave. DMA requests are generated at each EOC event of the slave ADC.
- Using MDMA mode, which leaves one DMA channel free for other uses:
  - Configure MDMA[1:0]=0b10 or 0b11 (depending on resolution).
  - A single DMA channel is used (the one of the master). Configure the DMA master ADC channel to read the common ADC register (ADCx_CDR)
  - A single DMA request is generated each time both master and slave EOC events have occurred. At that time, the slave ADC converted data is available in the upper half-word of the ADCx_CDR 32-bit register and the master ADC converted data is available in the lower half-word of ADCx_CCR register.
  - Both EOC flags are cleared when the DMA reads the ADCx_CCR register.

Note: In MDMA mode (MDMA[1:0]=0b10 or 0b11), the user must program the same number of conversions in the master's sequence as in the slave's sequence. Otherwise, the remaining conversions will not generate a DMA request.

Figure 120. Regular simultaneous mode on 16 channels: dual ADC mode

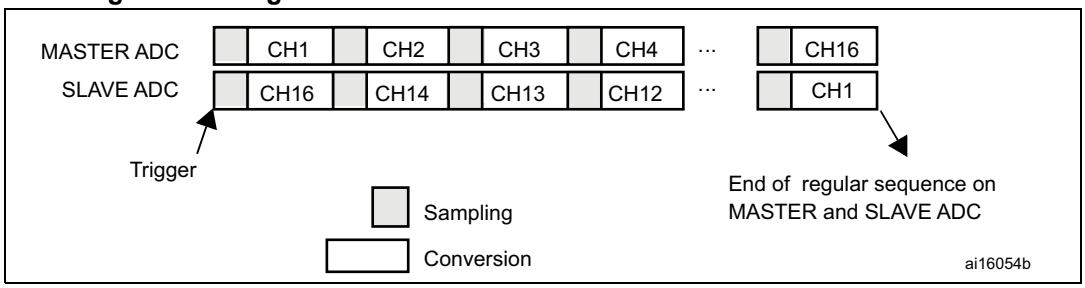

If DISCEN=1 then each “n” simultaneous conversions of the regular sequence require a regular trigger event to occur (“n” is defined by DISCNUM).

This mode can be combined with AUTDLY mode:

- Once a simultaneous conversion of the sequence has ended, the next conversion in the sequence is started only if the common data register, ADCx_CDR (or the regular data register of the master ADC) has been read (delay phase).
- Once a simultaneous regular sequence of conversions has ended, a new regular trigger event is accepted only if the common data register (ADCx_CDR) has been read (delay phase). Any new regular trigger events occurring during the ongoing regular sequence and the associated delay phases are ignored.

It is possible to use the DMA to handle data in regular simultaneous mode combined with AUTDLY mode, assuming that multi-DMA mode is used: bits MDMA must be set to 0b10 or 0b11.

When regular simultaneous mode is combined with AUTDLY mode, it is mandatory for the user to ensure that:

- The number of conversions in the master’s sequence is equal to the number of conversions in the slave’s.
- For each simultaneous conversions of the sequence, the length of the conversion of the slave ADC is inferior to the length of the conversion of the master ADC. Note that the length of the sequence depends on the number of channels to convert and the sampling time and the resolution of each channels.

Note: This combination of regular simultaneous mode and AUTDLY mode is restricted to the use case when only regular channels are programmed: it is forbidden to program injected channels in this combined mode.

Interleaved mode with independent injected

This mode is selected by programming bits DUAL[4:0] = 00111.

This mode can be started only on a regular group (usually one channel). The external trigger source comes from the regular channel multiplexer of the master ADC.

After an external trigger occurs:

- The master ADC starts immediately.
- The slave ADC starts after a delay of several-ADC clock cycles after the sampling phase of the master ADC has complete.

The minimum delay which separates two conversions in interleaved mode is configured in the DELAY bits in the ADCx_CCR register. This delay starts counting one half cycle after the end of the sampling phase of the master conversion. This way, an ADC cannot start a

conversion if the complementary ADC is still sampling its input (only one ADC can sample the input signal at a given time).

- The minimum possible DELAY is 1 to ensure that there is at least one cycle time between the opening of the analog switch of the master ADC sampling phase and the closing of the analog switch of the slave ADC sampling phase.
- The maximum DELAY is equal to the number of cycles corresponding to the selected resolution. However the user must properly calculate this delay to ensure that an ADC does not start a conversion while the other ADC is still sampling its input.

If the CONT bit is set on both master and slave ADCs, the selected regular channels of both ADCs are continuously converted.

The software is notified by interrupts when it can read the data at the end of each conversion event (EOC) on the slave ADC. A slave and master EOC interrupts are generated (if EOCIE is enabled) and the software can read the ADC_DR of the slave/master ADC.

Note: It is possible to enable only the EOC interrupt of the slave and read the common data register (ADCx_CDR). But in this case, the user must ensure that the duration of the conversions are compatible to ensure that inside the sequence, a master conversion is always followed by a slave conversion before a new master conversion restarts. It is recommended to use the MDMA mode.

It is also possible to have the regular data transferred by DMA. In this case, individual DMA requests on each ADC cannot be used and it is mandatory to use the MDMA mode, as following:

- Configure MDMA[1:0]=0b10 or 0b11 (depending on resolution).
- A single DMA channel is used (the one of the master). Configure the DMA master ADC channel to read the common ADC register (ADCx_CDR).
- A single DMA request is generated each time both master and slave EOC events have occurred. At that time, the slave ADC converted data is available in the upper half-word of the ADCx_CDR 32-bit register and the master ADC converted data is available in the lower half-word of ADCx_CCR register.
- Both EOC flags are cleared when the DMA reads the ADCx_CCR register.

Figure 121. Interleaved mode on 1 channel in continuous conversion mode: dual ADC mode

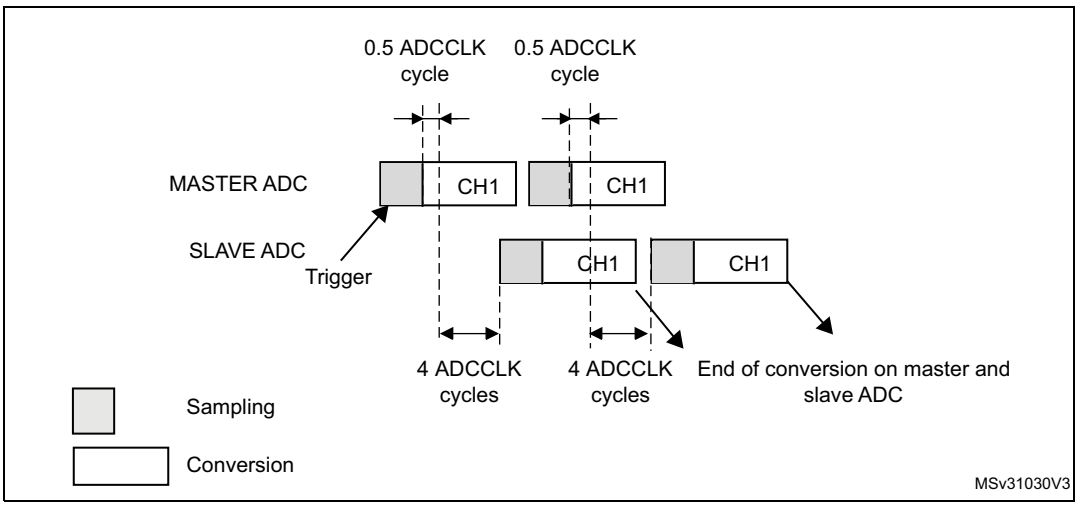

Figure 122. Interleaved mode on 1 channel in single conversion mode: dual ADC mode

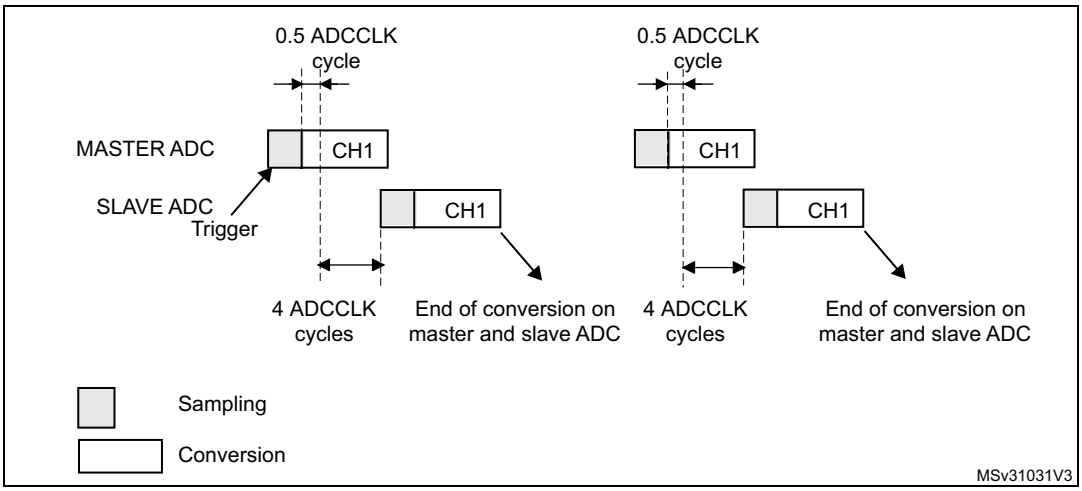

If DISCEN=1, each “n” simultaneous conversions (“n” is defined by DISCNUM) of the regular sequence require a regular trigger event to occur.

In this mode, injected conversions are supported. When injection is done (either on master or on slave), both the master and the slave regular conversions are aborted and the sequence is restarted from the master (see *Figure 123* below).

Figure 123. Interleaved conversion with injection

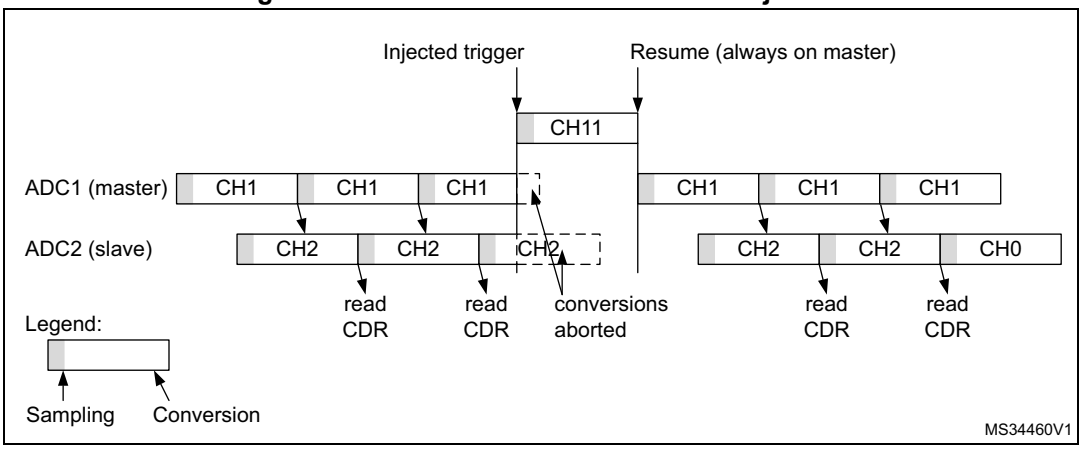

Alternate trigger mode

This mode is selected by programming bits DUAL[4:0] = 01001.

This mode can be started only on an injected group. The source of external trigger comes from the injected group multiplexer of the master ADC.

This mode is only possible when selecting hardware triggers: JEXTEN[1:0] must not be 00.

Injected discontinuous mode disabled (JDISCEN=0 for both ADC)

1. When the 1st trigger occurs, all injected master ADC channels in the group are converted.
2. When the 2nd trigger occurs, all injected slave ADC channels in the group are converted.
3. And so on.

A JEOS interrupt, if enabled, is generated after all injected channels of the master ADC in the group have been converted.

A JEOS interrupt, if enabled, is generated after all injected channels of the slave ADC in the group have been converted.

JEOC interrupts, if enabled, can also be generated after each injected conversion.

If another external trigger occurs after all injected channels in the group have been converted then the alternate trigger process restarts by converting the injected channels of the master ADC in the group.

Figure 124. Alternate trigger: injected group of each ADC

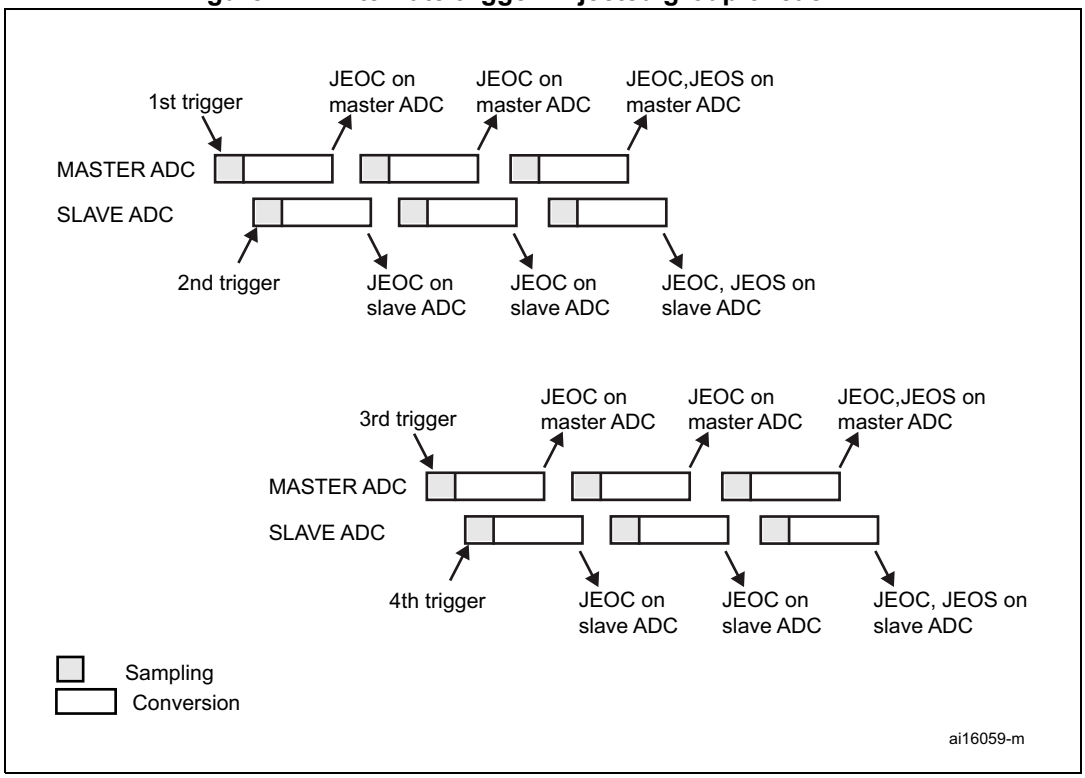

Note: Regular conversions can be enabled on one or all ADCs. In this case the regular conversions are independent of each other. A regular conversion is interrupted when the ADC has to perform an injected conversion. It is resumed when the injected conversion is finished.

The time interval between 2 trigger events must be greater than or equal to 1 ADC clock period. The minimum time interval between 2 trigger events that start conversions on the same ADC is the same as in the single ADC mode.

Injected discontinuous mode enabled (JDISCEN=1 for both ADC)

If the injected discontinuous mode is enabled for both master and slave ADCs:

- When the 1st trigger occurs, the first injected channel of the master ADC is converted.
- When the 2nd trigger occurs, the first injected channel of the slave ADC is converted.
- And so on.

A JEOS interrupt, if enabled, is generated after all injected channels of the master ADC in the group have been converted.

A JEOS interrupt, if enabled, is generated after all injected channels of the slave ADC in the group have been converted.

JEOC interrupts, if enabled, can also be generated after each injected conversions.

If another external trigger occurs after all injected channels in the group have been converted then the alternate trigger process restarts.

Figure 125. Alternate trigger: 4 injected channels (each ADC) in discontinuous mode

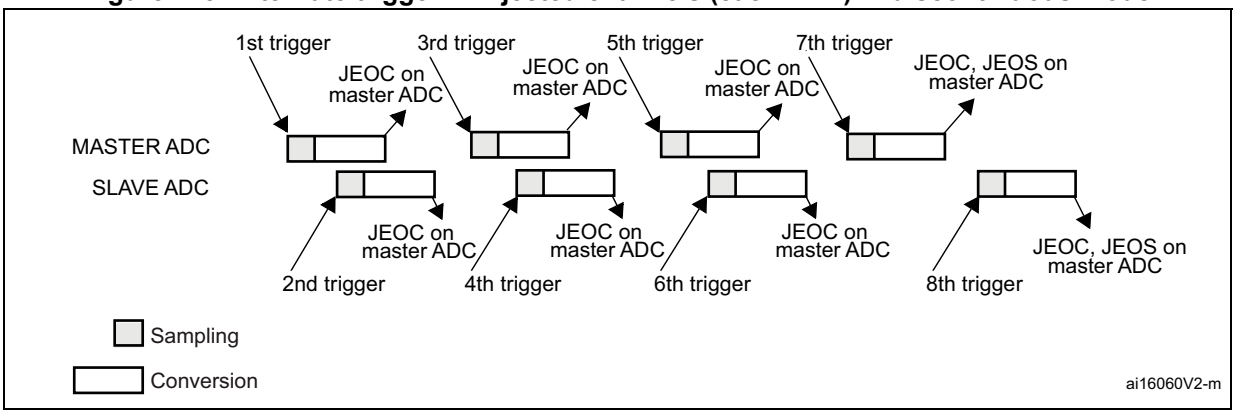

Combined regular/injected simultaneous mode

This mode is selected by programming bits DUAL[4:0] = 00001.

It is possible to interrupt the simultaneous conversion of a regular group to start the simultaneous conversion of an injected group.

Note: In combined regular/injected simultaneous mode, one must convert sequences with the same length or ensure that the interval between triggers is longer than the long conversion time of the 2 sequences. Otherwise, the ADC with the shortest sequence may restart while the ADC with the longest sequence is completing the previous conversions.

Combined regular simultaneous + alternate trigger mode

This mode is selected by programming bits DUAL[4:0]=00010.

It is possible to interrupt the simultaneous conversion of a regular group to start the alternate trigger conversion of an injected group. *Figure 126* shows the behavior of an alternate trigger interrupting a simultaneous regular conversion.

The injected alternate conversion is immediately started after the injected event. If a regular conversion is already running, in order to ensure synchronization after the injected conversion, the regular conversion of all (master/slave) ADCs is stopped and resumed synchronously at the end of the injected conversion.

Note: In combined regular simultaneous + alternate trigger mode, one must convert sequences with the same length or ensure that the interval between triggers is longer than the long conversion time of the 2 sequences. Otherwise, the ADC with the shortest sequence may restart while the ADC with the longest sequence is completing the previous conversions.

Figure 126. Alternate + regular simultaneous

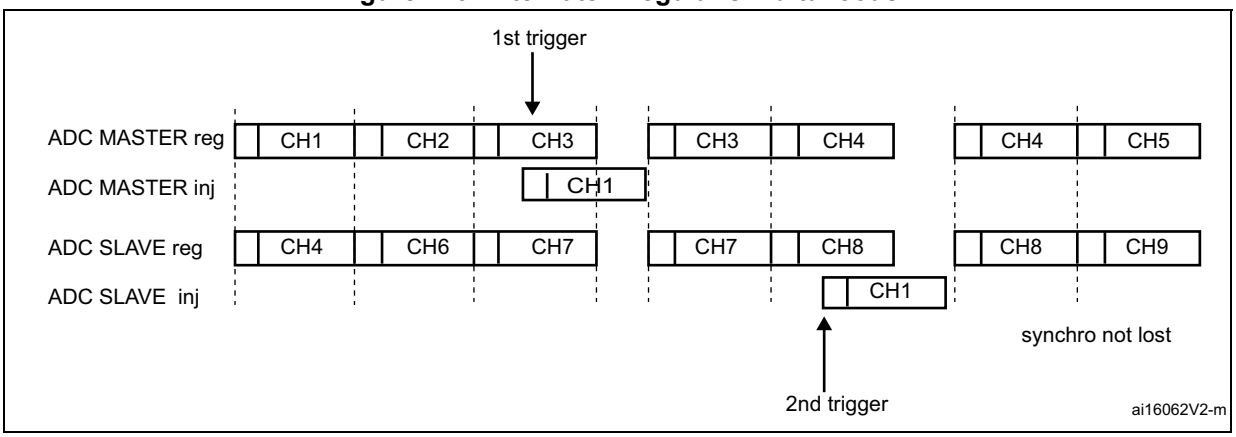

If a trigger occurs during an injected conversion that has interrupted a regular conversion, the alternate trigger is served. *Figure 127* shows the behavior in this case (note that the 6th trigger is ignored because the associated alternate conversion is not complete).

Figure 127. Case of trigger occurring during injected conversion

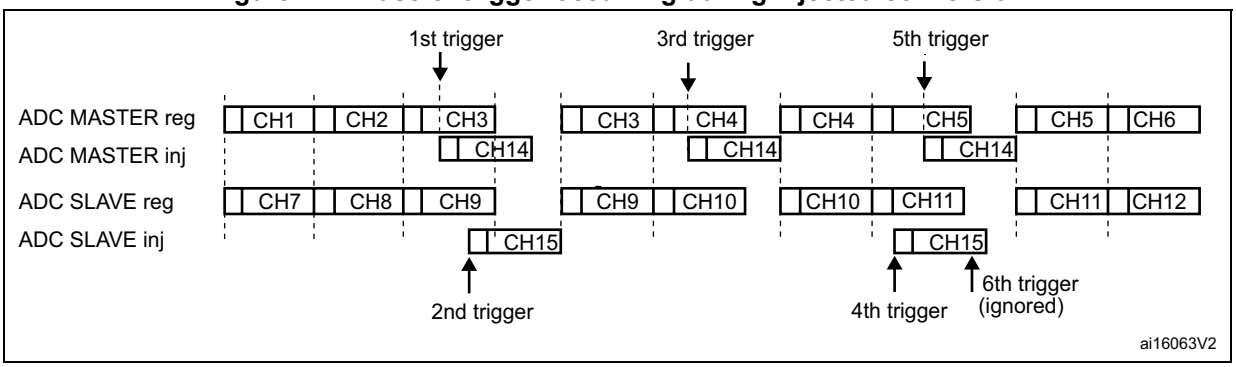

Combined injected simultaneous plus interleaved

This mode is selected by programming bits DUAL[4:0]=00011

It is possible to interrupt an interleaved conversion with a simultaneous injected event.

In this case the interleaved conversion is interrupted immediately and the simultaneous injected conversion starts. At the end of the injected sequence the interleaved conversion is resumed. When the interleaved regular conversion resumes, the first regular conversion which is performed is alway the master's one. *Figure 128*, *Figure 129* and *Figure 130* show the behavior using an example.

Caution: In this mode, it is mandatory to use the Common Data Register to read the regular data with a single read access. On the contrary, master-slave data coherency is not guaranteed.

Figure 128. Interleaved single channel CH0 with injected sequence CH11, CH12

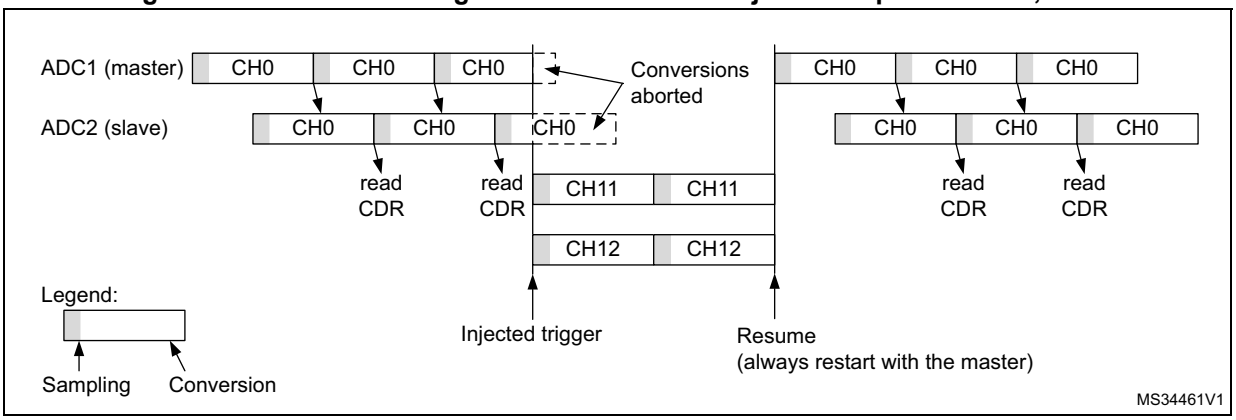

Figure 129. Two Interleaved channels (CH1, CH2) with injected sequence CH11, CH12 - case 1: Master interrupted first

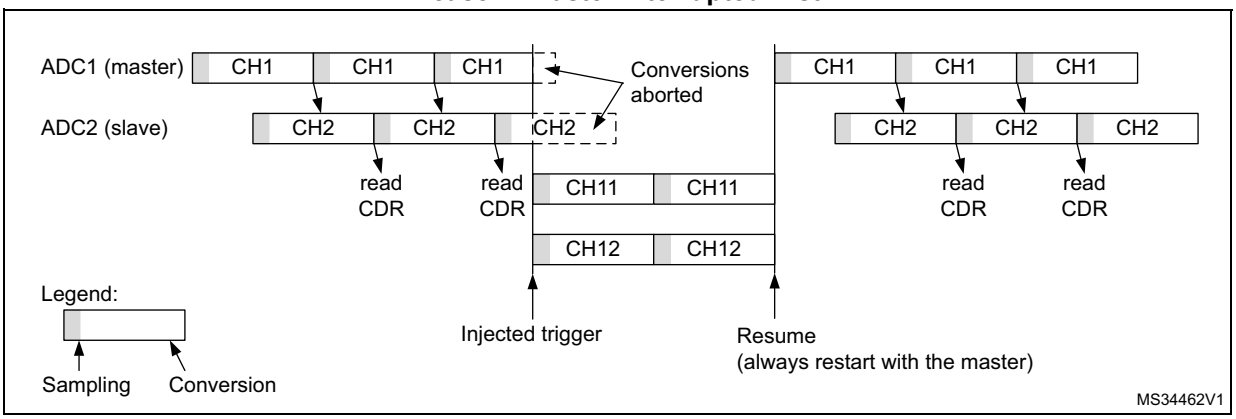

Figure 130. Two Interleaved channels (CH1, CH2) with injected sequence CH11, CH12 - case 2: Slave interrupted first

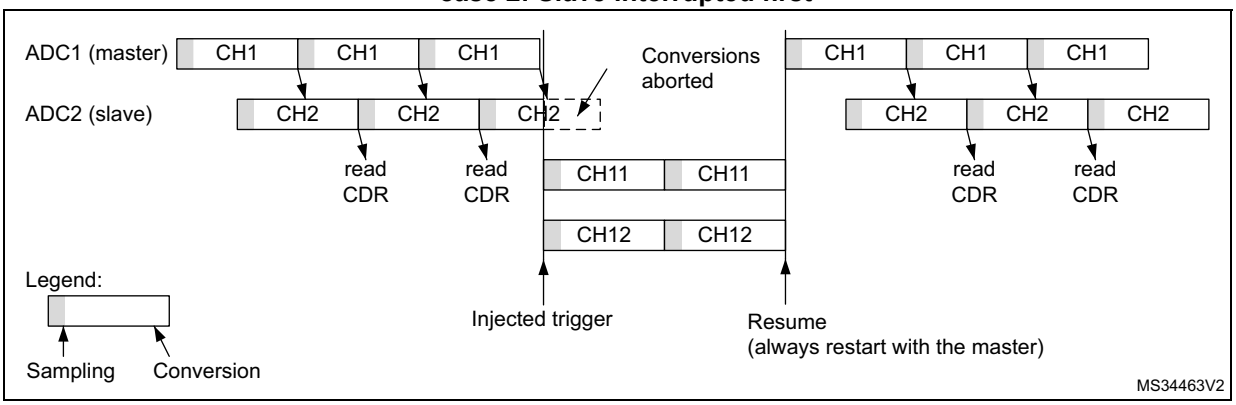

DMA requests in dual ADC mode

In all dual ADC modes, it is possible to use two DMA channels (one for the master, one for the slave) to transfer the data, like in single mode (refer to *Figure 131: DMA Requests in regular simultaneous mode when MDMA=0b00*).

Figure 131. DMA Requests in regular simultaneous mode when MDMA=0b00

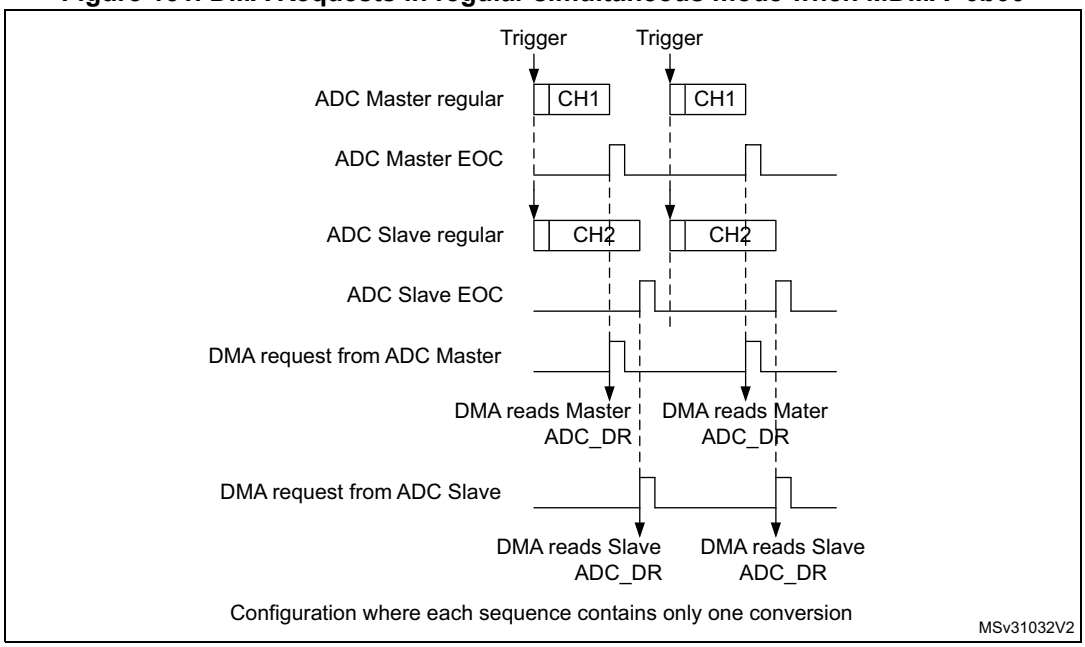

In simultaneous regular and interleaved modes, it is also possible to save one DMA channel and transfer both data using a single DMA channel. For this MDMA bits must be configured in the ADCx_CCR register:

- **MDMA=0b10**: A single DMA request is generated each time both master and slave EOC events have occurred. At that time, two data items are available and the 32-bit register ADCx_CDR contains the two half-words representing two ADC-converted data items. The slave ADC data take the upper half-word and the master ADC data take the lower half-word.
  This mode is used in interleaved mode and in regular simultaneous mode when resolution is 10-bit or 12-bit.

  Example:

  Interleaved dual mode: a DMA request is generated each time 2 data items are available:

  1st DMA request: ADCx_CDR[31:0] = SLV_ADC_DR[15:0] | MST_ADC_DR[15:0]

  2nd DMA request: ADCx_CDR[31:0] = SLV_ADC_DR[15:0] | MST_ADC_DR[15:0]

Figure 132. DMA requests in regular simultaneous mode when MDMA=0b10

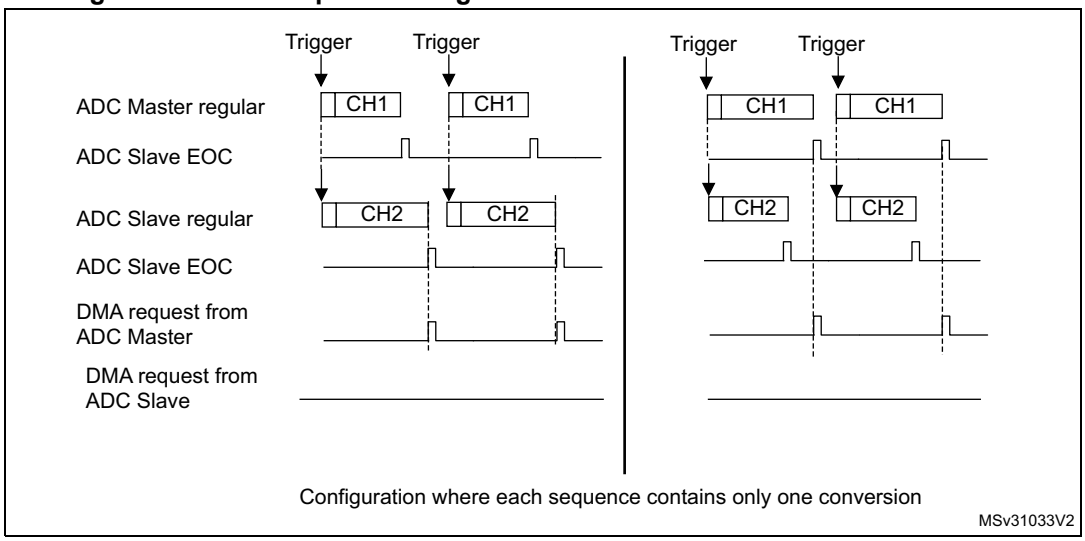

Figure 133. DMA requests in interleaved mode when MDMA=0b10

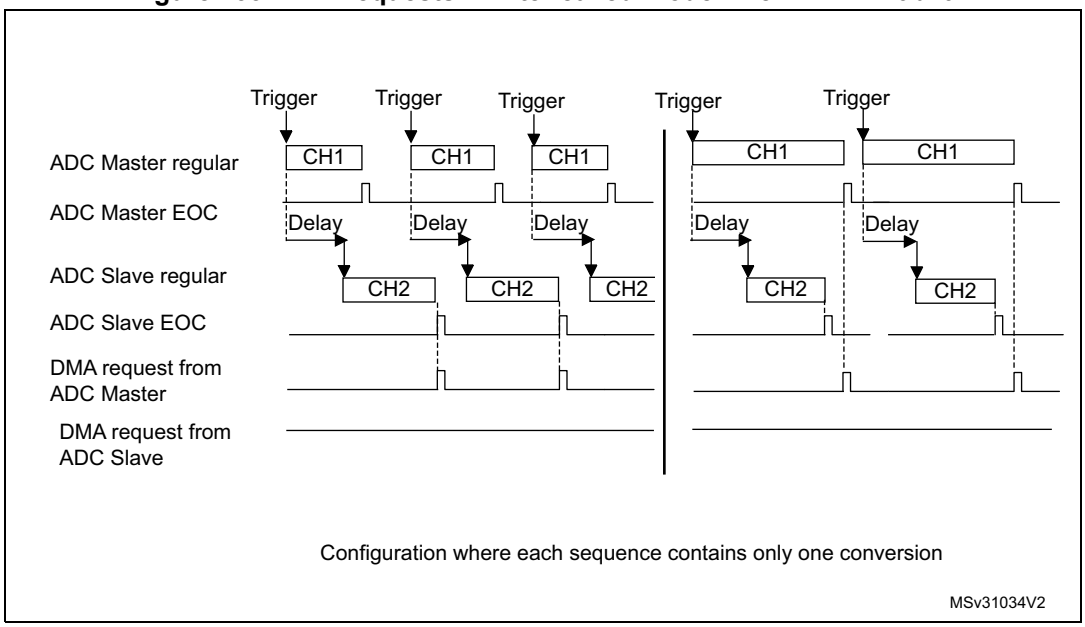

Note: When using MDMA mode, the user must take care to configure properly the duration of the master and slave conversions so that a DMA request is generated and served for reading both data (master + slave) before a new conversion is available.

- **MDMA=0b11**: This mode is similar to the MDMA=0b10. The only differences are that on each DMA request (two data items are available), two bytes representing two ADC converted data items are transferred as a half-word.

  This mode is used in interleaved and regular simultaneous mode when resolution is 6-bit or when resolution is 8-bit and data is not signed (offsets must be disabled for all the involved channels).

  Example:

  Interleaved dual mode: a DMA request is generated each time 2 data items are available:

  1st DMA request: ADCx_CDR[15:0] = SLV_ADC_DR[7:0] | MST_ADC_DR[7:0]

  2nd DMA request: ADCx_CDR[15:0] = SLV_ADC_DR[7:0] | MST_ADC_DR[7:0]

Overrun detection

In dual ADC mode (when DUAL[4:0] is not equal to b00000), if an overrun is detected on one of the ADCs, the DMA requests are no longer issued to ensure that all the data transferred to the RAM are valid (this behavior occurs whatever the MDMA configuration). It may happen that the EOC bit corresponding to one ADC remains set because the data register of this ADC contains valid data.

DMA one shot mode/ DMA circular mode when MDMA mode is selected

When MDMA mode is selected (0b10 or 0b11), bit DMACFG of the ADCx_CCR register must also be configured to select between DMA one shot mode and circular mode, as explained in section *Section : Managing conversions using the DMA* (bits DMACFG of master and slave ADC_CFGR are not relevant).

Stopping the conversions in dual ADC modes

The user must set the control bits ADSTP/JADSTP of the master ADC to stop the conversions of both ADC in dual ADC mode. The other ADSTP control bit of the slave ADC has no effect in dual ADC mode.

Once both ADC are effectively stopped, the bits ADSTART/JADSTART of the master and slave ADCs are both cleared by hardware.

DFSDM mode in dual ADC interleaved mode

In dual ADC interleaved modes (DUAL[4:0] = 00011 or DUAL[4:0] = 00111), the ADC conversion results can be transferred directly to the DFSDM.

The DFSDM mode is enabled by setting DFSDMCFG bits to 1 in the master ADC ADC_CFGR register.

The ADC transfers alternatively the 16 least significant bits of the regular data register from the master and the slave converter to a single channel of the DFSDM. Each transfer resets the EOC flag of each channel once the transfer is complete.

To use this mode, the application software must configure MDMA[1:0] bits of ADCx_CCR to ‘01’.

The data format must be 16-bit signed:

ADC_DR[15:12] = sign extended

ADC_DR[11] = sign

ADC_DR[10:0] = data

To obtain 16-bit signed format, the software needs to configure OFFSETy[11:0] bits to 0x800 after having set OFFSETy_EN to 1.

Only right aligned data can be provided to the DFSDM input format. (see *Figure 97: Right alignment (offset enabled, signed value)*)

DFSDM mode in dual ADC simultaneous mode

The dual mode is not required to use DFSDM in dual ADC simultaneous mode since conversion data will be treated by each individual channel. Single mode with same trigger source results in simultaneous conversion with DFSDM interface.

18.4.32 Temperature sensor

The temperature sensor can be used to measure the junction temperature (Tj) of the device. The temperature sensor is internally connected to the ADC input channels which are used to convert the sensor output voltage to a digital value. When not in use, the sensor can be put in power down mode. It support the temperature range –40 to 125 °C.

Figure 134 shows the block diagram of connections between the temperature sensor and the ADC.

The temperature sensor output voltage changes linearly with temperature. The offset of this line varies from chip to chip due to process variation (up to 45 °C from one chip to another).

The uncalibrated internal temperature sensor is more suited for applications that detect temperature variations instead of absolute temperatures. To improve the accuracy of the temperature sensor measurement, calibration values are stored in system memory for each device by ST during production.

During the manufacturing process, the calibration data of the temperature sensor and the internal voltage reference are stored in the system memory area. The user application can then read them and use them to improve the accuracy of the temperature sensor or the internal reference (refer to the datasheet for additional information).

The temperature sensor is internally connected to the ADC input channel which is used to convert the sensor's output voltage to a digital value. Refer to the electrical characteristics section of the device datasheet for the sampling time value to be applied when converting the internal temperature sensor.

When not in use, the sensor can be put in power-down mode.

Figure 134 shows the block diagram of the temperature sensor.

Figure 134. Temperature sensor channel block diagram

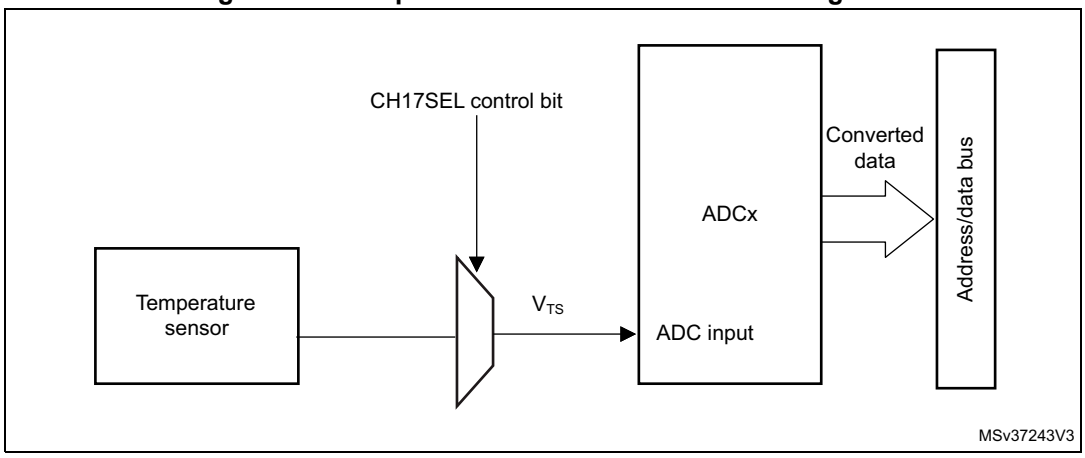

1. The CH17SEL bit must be set to enable the conversion of the temperature sensor voltage V_{TS}.

Reading the temperature

To use the sensor:

1. Select an ADC input channel that is connected to V_{TS}.
2. Program with the appropriate sampling time (refer to electrical characteristics section of the device datasheet).
3. Set the CH17SEL bit in the ADCx_CCR register to wake up the temperature sensor from power-down mode.
4. Start the ADC conversion.
5. Read the resulting V_{TS} data in the ADC data register.
6. Calculate the actual temperature using the following formula:

$$\text{Temperature (in °C)} = \frac{\text{TS_CAL2_TEMP} - \text{TS_CAL1_TEMP}}{\text{TS_CAL2} - \text{TS_CAL1}} \times (\text{TS_DATA} - \text{TS_CAL1}) + 30\ °\text{C}$$

Where:

- TS_CAL2 is the temperature sensor calibration value acquired at TS_CAL2_TEMP.
- TS_CAL1 is the temperature sensor calibration value acquired at TS_CAL1_TEMP.
- TS_DATA is the actual temperature sensor output value converted by ADC.

  Refer to the device datasheet for more information about TS_CAL1 and TS_CAL2 calibration points.

Note: The sensor has a startup time after waking from power-down mode before it can output V_{TS} at the correct level. The ADC also has a startup time after power-on, so to minimize the delay, the ADEN and CH17SEL bits should be set at the same time.

18.4.33 V_{BAT} supply monitoring

The CH18SEL bit in the ADCx_CCR register is used to switch to the battery voltage. As the V_{BAT} voltage could be higher than V_{DDA}, to ensure the correct operation of the ADC, the V_{BAT} pin is internally connected to a bridge divider by 3. This bridge is automatically enabled when CH18SEL is set, to connect $V_{BAT}/3$ to the ADC input channels. As a consequence, the converted digital value is one third of the V_{BAT} voltage. To prevent any unwanted consumption on the battery, it is recommended to enable the bridge divider only when needed, for ADC conversion.

Refer to the electrical characteristics of the device datasheet for the sampling time value to be applied when converting the $V_{BAT}/3$ voltage.

The figure below shows the block diagram of the V_{BAT} sensing feature.

Figure 135. V_{BAT} channel block diagram

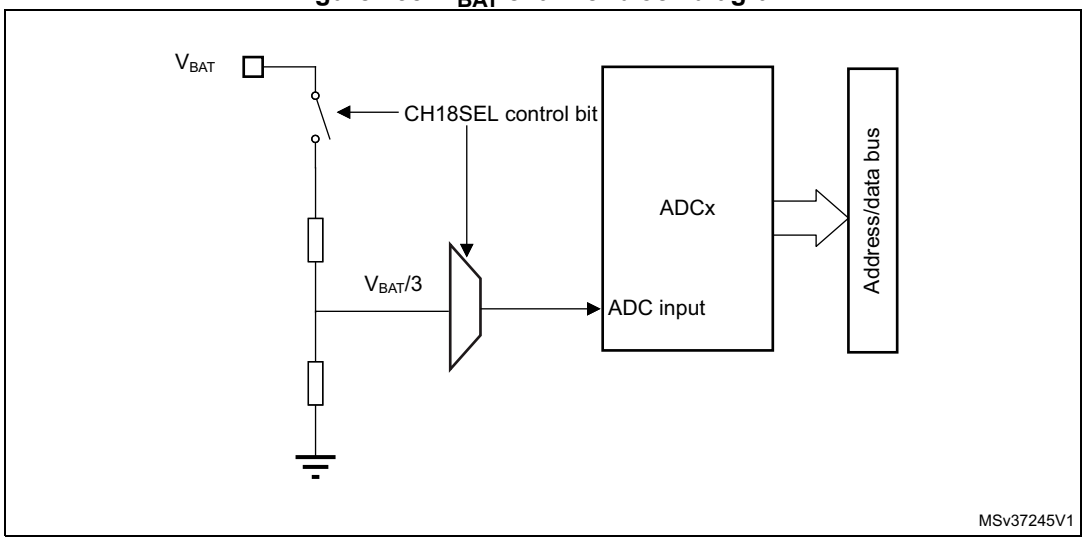

1. The CH18SEL bit must be set to enable the conversion of internal channel for $V_{BAT}/3$.

18.4.34 Monitoring the internal voltage reference

It is possible to monitor the internal voltage reference (V_{REFINT}) to have a reference point for evaluating the ADC V_{REF+} voltage level.

The internal voltage reference is internally connected to the input channel 0 of the ADC1 (ADC1_INP0).

Refer to the electrical characteristics section of the product datasheet for the sampling time value to be applied when converting the internal voltage reference voltage.

Figure 136 shows the block diagram of the V_{REFINT} sensing feature.

Figure 136. V_{REFINT} channel block diagram

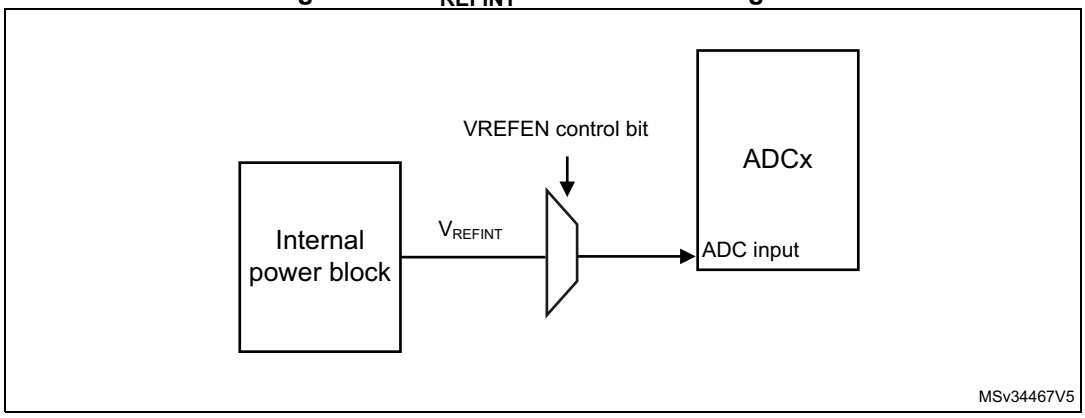

1. The VREFEN bit into ADCx_CCR register must be set to enable the conversion of internal channels (V_{REFINT}).

Calculating the actual V_{DDA} voltage using the internal reference voltage

The power supply voltage applied to the device may be subject to variations or not precisely known. When V_{DDA} is connected to V_{REF+}, it is possible to compute the actual V_{DDA} voltage using the embedded internal reference voltage (V_{REFINT}). V_{REFINT} and its calibration data acquired by the ADC during the manufacturing process at V_{DDA} = 3.0 V can be used to evaluate the actual V_{DDA} voltage level.

The following formula gives the actual V_{DDA} voltage supplying the device:

$$V_{REF+} = 3.0\ V \times VREFINT_CAL / VREFINT_DATA$$

Where:

- VREFINT_CAL is the VREFINT calibration value
- VREFINT_DATA is the actual VREFINT output value converted by ADC

Converting a supply-relative ADC measurement to an absolute voltage value

The ADC is designed to deliver a digital value corresponding to the ratio between V_{REF+} and the voltage applied on the converted channel.

For most applications V_{DDA} value is unknown and ADC converted values are right-aligned. In this case, it is necessary to convert this ratio into a voltage independent from V_{DDA}:

$$V_{CHANNELx} = \frac{V_{REF+}}{FULL_SCALE} \times ADC_DATA$$

By replacing V_{REF+} by the formula provided above, the absolute voltage value is given by the following formula

$$V_{CHANNELx} = \frac{3.0\ V \times VREFINT_CAL \times ADC_DATA}{VREFINT_DATA \times FULL_SCALE}$$

For applications where V_{DDA} is known and ADC converted values are right-aligned, the absolute voltage value can be obtained by using the following formula:

$$V_{CHANNELx} = \frac{V_{DDA}}{FULL_SCALE} \times ADC_DATA$$

Where:

– VREFINT_CAL is the VREFINT calibration value
– ADC_DATA is the value measured by the ADC on channel x (right-aligned)
– VREFINT_DATA is the actual VREFINT output value converted by the ADC
– FULL_SCALE is the maximum digital value of the ADC output. For example with 12-bit resolution, it will be 2^{12} - 1 = 4095 or with 8-bit resolution, 2^8 - 1 = 255.

Note: If ADC measurements are done using an output format other than 16-bit right-aligned, all the parameters must first be converted to a compatible format before the calculation is done.

18.5 ADC interrupts

For each ADC, an interrupt can be generated:

- After ADC power-up, when the ADC is ready (flag ADRDY)
- On the end of any conversion for regular groups (flag EOC)
- On the end of a sequence of conversion for regular groups (flag EOS)
- On the end of any conversion for injected groups (flag JEOC)
- On the end of a sequence of conversion for injected groups (flag JEOS)
- When an analog watchdog detection occurs (flag AWD1, AWD2 and AWD3)
- When the end of sampling phase occurs (flag EOSMP)
- When the data overrun occurs (flag OVR)
- When the injected sequence context queue overflows (flag JQOVF)

Separate interrupt enable bits are available for flexibility.

Table 117. ADC interrupts per each ADC

Interrupt event	Event flag	Enable control bit
ADC ready	ADRDY	ADRDYIE
End of conversion of a regular group	EOC	EOCIE
End of sequence of conversions of a regular group	EOS	EOSIE
End of conversion of a injected group	JEOC	JEOCIE
End of sequence of conversions of an injected group	JEOS	JEOSIE

Table 117. ADC interrupts per each ADC (continued)

Interrupt event	Event flag	Enable control bit
Analog watchdog 1 status bit is set	AWD1	AWD1IE
Analog watchdog 2 status bit is set	AWD2	AWD2IE
Analog watchdog 3 status bit is set	AWD3	AWD3IE
End of sampling phase	EOSMP	EOSMPIE
Overrun	OVR	OVRIE
Injected context queue overflows	JQOVF	JQOVFIE

18.6 ADC registers (for each ADC)

Refer to *Section 1.2 on page 69* for a list of abbreviations used in register descriptions.

18.6.1 ADC interrupt and status register (ADC_ISR)

Address offset: 0x00

Reset value: 0x0000 0000

31	30	29	28	27	26	25	24	23	22	21	20	19	18	17	16
Res.	Res.	Res.	Res.	Res.	Res.	Res.	Res.	Res.	Res.	Res.	Res.	Res.	Res.	Res.	Res.
15	14	13	12	11	10	9	8	7	6	5	4	3	2	1	0
Res.	Res.	Res.	Res.	Res.	JQOVF	AWD3	AWD2	AWD1	JEOS	JEOC	OVR	EOS	EOC	EOSMP	ADRDY
					rc_w1	rc_w1	rc_w1	rc_w1	rc_w1	rc_w1	rc_w1	rc_w1	rc_w1	rc_w1	rc_w1

Bits 31:11 Reserved, must be kept at reset value.

Bit 10 **JQOVF**: Injected context queue overflow

This bit is set by hardware when an Overflow of the Injected Queue of Context occurs. It is cleared by software writing 1 to it. Refer to *Section 18.4.21: Queue of context for injected conversions* for more information.

0: No injected context queue overflow occurred (or the flag event was already acknowledged and cleared by software)

1: Injected context queue overflow has occurred

Bit 9 **AWD3**: Analog watchdog 3 flag

This bit is set by hardware when the converted voltage crosses the values programmed in the fields LT3[7:0] and HT3[7:0] of ADC_TR3 register. It is cleared by software writing 1 to it.

0: No analog watchdog 3 event occurred (or the flag event was already acknowledged and cleared by software)

1: Analog watchdog 3 event occurred

Bit 8 **AWD2**: Analog watchdog 2 flag

This bit is set by hardware when the converted voltage crosses the values programmed in the fields LT2[7:0] and HT2[7:0] of ADC_TR2 register. It is cleared by software writing 1 to it.

0: No analog watchdog 2 event occurred (or the flag event was already acknowledged and cleared by software)

1: Analog watchdog 2 event occurred

Bit 7 **AWD1**: Analog watchdog 1 flag

This bit is set by hardware when the converted voltage crosses the values programmed in the fields LT1[11:0] and HT1[11:0] of ADC_TR1 register. It is cleared by software. writing 1 to it.

0: No analog watchdog 1 event occurred (or the flag event was already acknowledged and cleared by software)

1: Analog watchdog 1 event occurred

Bit 6 **JEOS:** Injected channel end of sequence flag

This bit is set by hardware at the end of the conversions of all injected channels in the group. It is cleared by software writing 1 to it.

0: Injected conversion sequence not complete (or the flag event was already acknowledged and cleared by software)

1: Injected conversions complete

Bit 5 **JEOC:** Injected channel end of conversion flag

This bit is set by hardware at the end of each injected conversion of a channel when a new data is available in the corresponding ADC_JDRy register. It is cleared by software writing 1 to it or by reading the corresponding ADC_JDRy register

0: Injected channel conversion not complete (or the flag event was already acknowledged and cleared by software)

1: Injected channel conversion complete

Bit 4 **OVR**: ADC overrun

This bit is set by hardware when an overrun occurs on a regular channel, meaning that a new conversion has completed while the EOC flag was already set. It is cleared by software writing 1 to it.

0: No overrun occurred (or the flag event was already acknowledged and cleared by software)

1: Overrun has occurred

Bit 3 **EOS**: End of regular sequence flag

This bit is set by hardware at the end of the conversions of a regular sequence of channels. It is cleared by software writing 1 to it.

0: Regular Conversions sequence not complete (or the flag event was already acknowledged and cleared by software)

1: Regular Conversions sequence complete

Bit 2 **EOC**: End of conversion flag

This bit is set by hardware at the end of each regular conversion of a channel when a new data is available in the ADC_DR register. It is cleared by software writing 1 to it or by reading the ADC_DR register

0: Regular channel conversion not complete (or the flag event was already acknowledged and cleared by software)

1: Regular channel conversion complete

Bit 1 **EOSMP**: End of sampling flag

This bit is set by hardware during the conversion of any channel (only for regular channels), at the end of the sampling phase.

0: not at the end of the sampling phase (or the flag event was already acknowledged and cleared by software)

1: End of sampling phase reached

Bit 0 **ADRDY**: ADC ready

This bit is set by hardware after the ADC has been enabled (bit ADEN=1) and when the ADC reaches a state where it is ready to accept conversion requests.

It is cleared by software writing 1 to it.

0: ADC not yet ready to start conversion (or the flag event was already acknowledged and cleared by software)

1: ADC is ready to start conversion

18.6.2 ADC interrupt enable register (ADC_IER)

Address offset: 0x04

Reset value: 0x0000 0000

31	30	29	28	27	26	25	24	23	22	21	20	19	18	17	16
Res.	Res.	Res.	Res.	Res.	Res.	Res.	Res.	Res.	Res.	Res.	Res.	Res.	Res.	Res.	Res.
15	**14**	**13**	**12**	**11**	**10**	**9**	**8**	**7**	**6**	**5**	**4**	**3**	**2**	**1**	**0**
Res.	Res.	Res.	Res.	Res.	JQOVFIE	AWD3IE	AWD2IE	AWD1IE	JEOSIE	JEOCIE	OVRIE	EOSIE	EOCIE	EOSMPIE	ADRDYIE
					rw	rw	rw	rw	rw	rw	rw	rw	rw	rw	rw

Bits 31:11 Reserved, must be kept at reset value.

Bit 10 **JQOVFIE**: Injected context queue overflow interrupt enable

This bit is set and cleared by software to enable/disable the Injected Context Queue Overflow interrupt.

0: Injected Context Queue Overflow interrupt disabled

1: Injected Context Queue Overflow interrupt enabled. An interrupt is generated when the JQOVF bit is set.

Note: The software is allowed to write this bit only when JADSTART=0 (which ensures that no injected conversion is ongoing).

Bit 9 **AWD3IE**: Analog watchdog 3 interrupt enable

This bit is set and cleared by software to enable/disable the analog watchdog 2 interrupt.

0: Analog watchdog 3 interrupt disabled

1: Analog watchdog 3 interrupt enabled

Note: The software is allowed to write this bit only when ADSTART=0 and JADSTART=0 (which ensures that no conversion is ongoing).

Bit 8 **AWD2IE**: Analog watchdog 2 interrupt enable

This bit is set and cleared by software to enable/disable the analog watchdog 2 interrupt.

0: Analog watchdog 2 interrupt disabled

1: Analog watchdog 2 interrupt enabled

Note: The software is allowed to write this bit only when ADSTART=0 and JADSTART=0 (which ensures that no conversion is ongoing).

Bit 7 **AWD1IE**: Analog watchdog 1 interrupt enable

This bit is set and cleared by software to enable/disable the analog watchdog 1 interrupt.

0: Analog watchdog 1 interrupt disabled

1: Analog watchdog 1 interrupt enabled

Note: The software is allowed to write this bit only when ADSTART=0 and JADSTART=0 (which ensures that no conversion is ongoing).

Bit 6 **JEOSIE**: End of injected sequence of conversions interrupt enable

This bit is set and cleared by software to enable/disable the end of injected sequence of conversions interrupt.

0: JEOS interrupt disabled

1: JEOS interrupt enabled. An interrupt is generated when the JEOS bit is set.

Note: The software is allowed to write this bit only when JADSTART=0 (which ensures that no injected conversion is ongoing).

Bit 5 **JEOCIE**: End of injected conversion interrupt enable

This bit is set and cleared by software to enable/disable the end of an injected conversion interrupt.
0: JEOC interrupt disabled.
1: JEOC interrupt enabled. An interrupt is generated when the JEOC bit is set.

Note: The software is allowed to write this bit only when JADSTART = 0 (which ensures that no injected conversion is ongoing).

Bit 4 **OVRIE**: Overrun interrupt enable

This bit is set and cleared by software to enable/disable the Overrun interrupt of a regular conversion.
0: Overrun interrupt disabled
1: Overrun interrupt enabled. An interrupt is generated when the OVR bit is set.

Note: The software is allowed to write this bit only when ADSTART=0 (which ensures that no regular conversion is ongoing).

Bit 3 **EOSIE**: End of regular sequence of conversions interrupt enable

This bit is set and cleared by software to enable/disable the end of regular sequence of conversions interrupt.
0: EOS interrupt disabled
1: EOS interrupt enabled. An interrupt is generated when the EOS bit is set.

Note: The software is allowed to write this bit only when ADSTART=0 (which ensures that no regular conversion is ongoing).

Bit 2 **EOCIE**: End of regular conversion interrupt enable

This bit is set and cleared by software to enable/disable the end of a regular conversion interrupt.
0: EOC interrupt disabled.
1: EOC interrupt enabled. An interrupt is generated when the EOC bit is set.

Note: The software is allowed to write this bit only when ADSTART=0 (which ensures that no regular conversion is ongoing).

Bit 1 **EOSMPIE**: End of sampling flag interrupt enable for regular conversions

This bit is set and cleared by software to enable/disable the end of the sampling phase interrupt for regular conversions.
0: EOSMP interrupt disabled.
1: EOSMP interrupt enabled. An interrupt is generated when the EOSMP bit is set.

Note: The software is allowed to write this bit only when ADSTART=0 (which ensures that no regular conversion is ongoing).

Bit 0 **ADRDYIE**: ADC ready interrupt enable

This bit is set and cleared by software to enable/disable the ADC Ready interrupt.
0: ADRDY interrupt disabled
1: ADRDY interrupt enabled. An interrupt is generated when the ADRDY bit is set.

Note: The software is allowed to write this bit only when ADSTART=0 and JADSTART=0 (which ensures that no conversion is ongoing).

18.6.3 ADC control register (ADC_CR)

Address offset: 0x08

Reset value: 0x2000 0000

31	30	29	28	27	26	25	24	23	22	21	20	19	18	17	16
ADCAL	ADCALDIF	DEEPPWD	ADVREGEN	Res.	Res.	Res.	Res.	Res.	Res.	Res.	Res.	Res.	Res.	Res.	Res.
rs	rw	rw	rw												

15	14	13	12	11	10	9	8	7	6	5	4	3	2	1	0
Res.	Res.	Res.	Res.	Res.	Res.	Res.	Res.	Res.	Res.	JADSTP	ADSTP	JADSTART	ADSTART	ADDIS	ADEN
										rs	rs	rs	rs	rs	rs

Bit 31 **ADCAL**: ADC calibration

This bit is set by software to start the calibration of the ADC. Program first the bit ADCALDIF to determine if this calibration applies for single-ended or differential inputs mode.

It is cleared by hardware after calibration is complete.

0: Calibration complete

1: Write 1 to calibrate the ADC. Read at 1 means that a calibration in progress.

Note: The software is allowed to launch a calibration by setting ADCAL only when ADEN=0.

The software is allowed to update the calibration factor by writing ADC_CALFACT only when ADEN=1 and ADSTART=0 and JADSTART=0 (ADC enabled and no conversion is ongoing)

Bit 30 **ADCALDIF**: Differential mode for calibration

This bit is set and cleared by software to configure the single-ended or differential inputs mode for the calibration.

0: Writing ADCAL will launch a calibration in single-ended inputs mode.

1: Writing ADCAL will launch a calibration in differential inputs mode.

Note: The software is allowed to write this bit only when the ADC is disabled and is not calibrating (ADCAL=0, JADSTART=0, JADSTP=0, ADSTART=0, ADSTP=0, ADDIS=0 and ADEN=0).

Bit 29 **DEEPPWD**: Deep-power-down enable

This bit is set and cleared by software to put the ADC in Deep-power-down mode.

0: ADC not in Deep-power down

1: ADC in Deep-power-down (default reset state)

Note: The software is allowed to write this bit only when the ADC is disabled (ADCAL=0, JADSTART=0, JADSTP=0, ADSTART=0, ADSTP=0, ADDIS=0 and ADEN=0).

Bit 28 **ADVREGEN**: ADC voltage regulator enable

This bits is set by software to enable the ADC voltage regulator.

Before performing any operation such as launching a calibration or enabling the ADC, the ADC voltage regulator must first be enabled and the software must wait for the regulator start-up time.

0: ADC Voltage regulator disabled

1: ADC Voltage regulator enabled.

For more details about the ADC voltage regulator enable and disable sequences, refer to *Section 18.4.6: ADC Deep-power-down mode (DEEPPWD) and ADC voltage regulator (ADVREGEN)*.

The software can program this bit field only when the ADC is disabled (ADCAL=0, JADSTART=0, ADSTART=0, ADSTP=0, ADDIS=0 and ADEN=0).

Bits 27:6 Reserved, must be kept at reset value.

Bit 5 **JADSTP**: ADC stop of injected conversion command

This bit is set by software to stop and discard an ongoing injected conversion (JADSTP Command).

It is cleared by hardware when the conversion is effectively discarded and the ADC injected sequence and triggers can be re-configured. The ADC is then ready to accept a new start of injected conversions (JADSTART command).

0: No ADC stop injected conversion command ongoing

1: Write 1 to stop injected conversions ongoing. Read 1 means that an ADSTP command is in progress.

Note: The software is allowed to set JADSTP only when JADSTART=1 and ADDIS=0 (ADC is enabled and eventually converting an injected conversion and there is no pending request to disable the ADC)

In Auto-injection mode (JAUTO=1), setting ADSTP bit aborts both regular and injected conversions (do not use JADSTP)

Bit 4 **ADSTP**: ADC stop of regular conversion command

This bit is set by software to stop and discard an ongoing regular conversion (ADSTP Command).

It is cleared by hardware when the conversion is effectively discarded and the ADC regular sequence and triggers can be re-configured. The ADC is then ready to accept a new start of regular conversions (ADSTART command).

0: No ADC stop regular conversion command ongoing

1: Write 1 to stop regular conversions ongoing. Read 1 means that an ADSTP command is in progress.

Note: The software is allowed to set ADSTP only when ADSTART=1 and ADDIS=0 (ADC is enabled and eventually converting a regular conversion and there is no pending request to disable the ADC).

In auto-injection mode (JAUTO=1), setting ADSTP bit aborts both regular and injected conversions (do not use JADSTP).

In dual ADC regular simultaneous mode and interleaved mode, the bit ADSTP of the master ADC must be used to stop regular conversions. The other ADSTP bit is inactive.

Bit 3 **JADSTART**: ADC start of injected conversion

This bit is set by software to start ADC conversion of injected channels. Depending on the configuration bits JEXTEN[1:0], a conversion will start immediately (software trigger configuration) or once an injected hardware trigger event occurs (hardware trigger configuration).

It is cleared by hardware:

– in single conversion mode when software trigger is selected (JEXTSEL=0x0): at the assertion of the End of Injected Conversion Sequence (JEOS) flag.

– in all cases: after the execution of the JADSTP command, at the same time that JADSTP is cleared by hardware.

0: No ADC injected conversion is ongoing.

1: Write 1 to start injected conversions. Read 1 means that the ADC is operating and eventually converting an injected channel.

Note: The software is allowed to set JADSTART only when ADEN=1 and ADDIS=0 (ADC is enabled and there is no pending request to disable the ADC).

In auto-injection mode (JAUTO=1), regular and auto-injected conversions are started by setting bit ADSTART (JADSTART must be kept cleared)

Bit 2 **ADSTART**: ADC start of regular conversion

This bit is set by software to start ADC conversion of regular channels. Depending on the configuration bits EXTEN[1:0], a conversion will start immediately (software trigger configuration) or once a regular hardware trigger event occurs (hardware trigger configuration).

It is cleared by hardware:

– in single conversion mode when software trigger is selected (EXTSEL=0x0): at the assertion of the End of Regular Conversion Sequence (EOS) flag.

– in all cases: after the execution of the ADSTP command, at the same time that ADSTP is cleared by hardware.

0: No ADC regular conversion is ongoing.

1: Write 1 to start regular conversions. Read 1 means that the ADC is operating and eventually converting a regular channel.

Note: The software is allowed to set ADSTART only when ADEN=1 and ADDIS=0 (ADC is enabled and there is no pending request to disable the ADC)

In auto-injection mode (JAUTO=1), regular and auto-injected conversions are started by setting bit ADSTART (JADSTART must be kept cleared)

Bit 1 **ADDIS**: ADC disable command

This bit is set by software to disable the ADC (ADDIS command) and put it into power-down state (OFF state).

It is cleared by hardware once the ADC is effectively disabled (ADEN is also cleared by hardware at this time).

0: no ADDIS command ongoing

1: Write 1 to disable the ADC. Read 1 means that an ADDIS command is in progress.

Note: The software is allowed to set ADDIS only when ADEN=1 and both ADSTART=0 and JADSTART=0 (which ensures that no conversion is ongoing)

Bit 0 **ADEN**: ADC enable control

This bit is set by software to enable the ADC. The ADC will be effectively ready to operate once the flag ADRDY has been set.

It is cleared by hardware when the ADC is disabled, after the execution of the ADDIS command.

0: ADC is disabled (OFF state)

1: Write 1 to enable the ADC.

Note: The software is allowed to set ADEN only when all bits of ADC_CR registers are 0 (ADCAL=0, JADSTART=0, ADSTART=0, ADSTP=0, ADDIS=0 and ADEN=0) except for bit ADVREGEN which must be 1 (and the software must have wait for the startup time of the voltage regulator)

18.6.4 ADC configuration register (ADC_CFGR)

Address offset: 0x0C

Reset value: 0x8000 0000

31	30	29	28	27	26	25	24	23	22	21	20	19	18	17	16
JQDIS	AWD1CH[4:0]					JAUTO	JAWD1EN	AWD1EN	AWD1SGL	JQM	JDISCEN	DISCNUM[2:0]			DISCEN
rw	rw	rw	rw	rw	rw	rw	rw	rw	rw	rw	rw	rw	rw	rw	rw
15	14	13	12	11	10	9	8	7	6	5	4	3	2	1	0
Res.	AUTDLY	CONT	OVRMOD	EXTEN[1:0]		EXTSEL3	EXTSEL2	EXTSEL1	EXTSEL0	ALIGN	RES[1:0]		DFSDMCFG	DMACFG	DMAEN
	rw	rw	rw	rw	rw	rw	rw	rw	rw	rw	rw	rw	rw	rw	rw

Bit 31 **JQDIS**: Injected Queue disable

These bits are set and cleared by software to disable the Injected Queue mechanism :

0: Injected Queue enabled

1: Injected Queue disabled

Note: The software is allowed to write this bit only when ADSTART=0 and JADSTART=0 (which ensures that no regular nor injected conversion is ongoing).

A set or reset of JQDIS bit causes the injected queue to be flushed and the JSQR register is cleared.

Bits 30:26 **AWD1CH[4:0]**: Analog watchdog 1 channel selection

These bits are set and cleared by software. They select the input channel to be guarded by the analog watchdog.

00000: ADC analog input channel 0 monitored by AWD1 (available on ADC1 only)

00001: ADC analog input channel 1 monitored by AWD1

.....

10010: ADC analog input channel 18 monitored by AWD1

others: reserved, must not be used

Note: Some channels are not connected physically. Keep the corresponding AWD1CH[4:0] setting to the reset value.

The channel selected by AWD1CH must be also selected into the SQRi or JSQRi registers.

The software is allowed to write these bits only when ADSTART=0 and JADSTART=0 (which ensures that no conversion is ongoing).

Bit 25 **JAUTO:** Automatic injected group conversion

This bit is set and cleared by software to enable/disable automatic injected group conversion after regular group conversion.

0: Automatic injected group conversion disabled

1: Automatic injected group conversion enabled

Note: The software is allowed to write this bit only when ADSTART=0 and JADSTART=0 (which ensures that no regular nor injected conversion is ongoing).

When dual mode is enabled (DUAL bits in ADCx_CCR register are not equal to zero), the bit JAUTO of the slave ADC is no more writable and its content is equal to the bit JAUTO of the master ADC.

Bit 24 **JAWD1EN**: Analog watchdog 1 enable on injected channels

This bit is set and cleared by software

0: Analog watchdog 1 disabled on injected channels

1: Analog watchdog 1 enabled on injected channels

Note: The software is allowed to write this bit only when JADSTART=0 (which ensures that no injected conversion is ongoing).

Bit 23 **AWD1EN**: Analog watchdog 1 enable on regular channels

This bit is set and cleared by software

0: Analog watchdog 1 disabled on regular channels

1: Analog watchdog 1 enabled on regular channels

Note: The software is allowed to write this bit only when ADSTART=0 (which ensures that no regular conversion is ongoing).

Bit 22 **AWD1SGL**: Enable the watchdog 1 on a single channel or on all channels

This bit is set and cleared by software to enable the analog watchdog on the channel identified by the AWD1CH[4:0] bits or on all the channels

0: Analog watchdog 1 enabled on all channels

1: Analog watchdog 1 enabled on a single channel

Note: The software is allowed to write these bits only when ADSTART=0 and JADSTART=0 (which ensures that no conversion is ongoing).

Bit 21 **JQM**: JSQR queue mode

This bit is set and cleared by software.

It defines how an empty Queue is managed.

0: JSQR mode 0: The Queue is never empty and maintains the last written configuration into JSQR.

1: JSQR mode 1: The Queue can be empty and when this occurs, the software and hardware triggers of the injected sequence are both internally disabled just after the completion of the last valid injected sequence.

Refer to *Section 18.4.21: Queue of context for injected conversions* for more information.

Note: The software is allowed to write this bit only when JADSTART=0 (which ensures that no injected conversion is ongoing).

When dual mode is enabled (DUAL bits in ADCx_CCR register are not equal to zero), the bit JQM of the slave ADC is no more writable and its content is equal to the bit JQM of the master ADC.

Bit 20 **JDISCEN:** Discontinuous mode on injected channels

This bit is set and cleared by software to enable/disable discontinuous mode on the injected channels of a group.

0: Discontinuous mode on injected channels disabled

1: Discontinuous mode on injected channels enabled

Note: The software is allowed to write this bit only when JADSTART=0 (which ensures that no injected conversion is ongoing).

It is not possible to use both auto-injected mode and discontinuous mode simultaneously: the bits DISCEN and JDISCEN must be kept cleared by software when JAUTO is set.

When dual mode is enabled (bits DUAL of ADCx_CCR register are not equal to zero), the bit JDISCEN of the slave ADC is no more writable and its content is equal to the bit JDISCEN of the master ADC.

Bits 19:17 **DISCNUM[2:0]:** Discontinuous mode channel count

These bits are written by software to define the number of regular channels to be converted in discontinuous mode, after receiving an external trigger.

000: 1 channel
001: 2 channels
...
111: 8 channels

Note: The software is allowed to write these bits only when ADSTART=0 (which ensures that no regular conversion is ongoing).

When dual mode is enabled (DUAL bits in ADCx_CCR register are not equal to zero), the bits DISCNUM[2:0] of the slave ADC are no more writable and their content is equal to the bits DISCNUM[2:0] of the master ADC.

Bit 16 **DISCEN**: Discontinuous mode for regular channels

This bit is set and cleared by software to enable/disable Discontinuous mode for regular channels.

0: Discontinuous mode for regular channels disabled
1: Discontinuous mode for regular channels enabled

Note: It is not possible to have both discontinuous mode and continuous mode enabled: it is forbidden to set both DISCEN=1 and CONT=1.

It is not possible to use both auto-injected mode and discontinuous mode simultaneously: the bits DISCEN and JDISCEN must be kept cleared by software when JAUTO is set.

The software is allowed to write this bit only when ADSTART=0 (which ensures that no regular conversion is ongoing).

When dual mode is enabled (DUAL bits in ADCx_CCR register are not equal to zero), the bit DISCEN of the slave ADC is no more writable and its content is equal to the bit DISCEN of the master ADC.

Bit 15 Reserved, must be kept at reset value.

Bit 14 **AUTDLY**: Delayed conversion mode

This bit is set and cleared by software to enable/disable the Auto Delayed Conversion mode.

0: Auto-delayed conversion mode off
1: Auto-delayed conversion mode on

Note: The software is allowed to write this bit only when ADSTART=0 and JADSTART=0 (which ensures that no conversion is ongoing).

When dual mode is enabled (DUAL bits in ADCx_CCR register are not equal to zero), the bit AUTDLY of the slave ADC is no more writable and its content is equal to the bit AUTDLY of the master ADC.

Bit 13 **CONT**: Single / continuous conversion mode for regular conversions

This bit is set and cleared by software. If it is set, regular conversion takes place continuously until it is cleared.

0: Single conversion mode
1: Continuous conversion mode

Note: It is not possible to have both discontinuous mode and continuous mode enabled: it is forbidden to set both DISCEN=1 and CONT=1.

The software is allowed to write this bit only when ADSTART=0 (which ensures that no regular conversion is ongoing).

When dual mode is enabled (DUAL bits in ADCx_CCR register are not equal to zero), the bit CONT of the slave ADC is no more writable and its content is equal to the bit CONT of the master ADC.

Bit 12 **OVRMOD**: Overrun mode

This bit is set and cleared by software and configure the way data overrun is managed.

0: ADC_DR register is preserved with the old data when an overrun is detected.

1: ADC_DR register is overwritten with the last conversion result when an overrun is detected.

Note: The software is allowed to write this bit only when ADSTART=0 (which ensures that no regular conversion is ongoing).

Bits 11:10 **EXTEN[1:0]**: External trigger enable and polarity selection for regular channels

These bits are set and cleared by software to select the external trigger polarity and enable the trigger of a regular group.

00: Hardware trigger detection disabled (conversions can be launched by software)

01: Hardware trigger detection on the rising edge

10: Hardware trigger detection on the falling edge

11: Hardware trigger detection on both the rising and falling edges

Note: The software is allowed to write these bits only when ADSTART=0 (which ensures that no regular conversion is ongoing).

Bits 9:6 **EXTSEL[3:0]**: External trigger selection for regular group

These bits select the external event used to trigger the start of conversion of a regular group:

0000: Event 0

0001: Event 1

0010: Event 2

0011: Event 3

0100: Event 4

0101: Event 5

0110: Event 6

0111: Event 7

...

1111: Event 15

Note: The software is allowed to write these bits only when ADSTART=0 (which ensures that no regular conversion is ongoing).

Bit 5 **ALIGN**: Data alignment

This bit is set and cleared by software to select right or left alignment. Refer to *Section : Data register, data alignment and offset (ADC_DR, OFFSETy, OFFSETy_CH, ALIGN)*

0: Right alignment

1: Left alignment

Note: The software is allowed to write this bit only when ADSTART=0 and JADSTART=0 (which ensures that no conversion is ongoing).

Bits 4:3 **RES[1:0]**: Data resolution

These bits are written by software to select the resolution of the conversion.

00: 12-bit

01: 10-bit

10: 8-bit

11: 6-bit

Note: The software is allowed to write these bits only when ADSTART=0 and JADSTART=0 (which ensures that no conversion is ongoing).

Bit 2 **DFSDMCFG**: DFSDM mode configuration

This bit is set and cleared by software to enable the DFSDM mode. It is effective only when DMAEN=0.

0: DFSDM mode disabled

1: DFSDM mode enabled

Note: To make sure no conversion is ongoing, the software is allowed to write this bit only when ADSTART= 0 and JADSTART= 0.

Bit 1 **DMACFG**: Direct memory access configuration

This bit is set and cleared by software to select between two DMA modes of operation and is effective only when DMAEN=1.

0: DMA One Shot mode selected

1: DMA Circular mode selected

For more details, refer to *Section : Managing conversions using the DMA*

Note: The software is allowed to write this bit only when ADSTART=0 and JADSTART=0 (which ensures that no conversion is ongoing).

In dual-ADC modes, this bit is not relevant and replaced by control bit DMACFG of the ADCx_CCR register.

Bit 0 **DMAEN**: Direct memory access enable

This bit is set and cleared by software to enable the generation of DMA requests. This allows to use the DMA to manage automatically the converted data. For more details, refer to *Section : Managing conversions using the DMA*.

0: DMA disabled

1: DMA enabled

Note: The software is allowed to write this bit only when ADSTART=0 and JADSTART=0 (which ensures that no conversion is ongoing).

In dual-ADC modes, this bit is not relevant and replaced by control bits MDMA[1:0] of the ADCx_CCR register.

18.6.5 ADC configuration register 2 (ADC_CFGR2)

Address offset: 0x10

Reset value: 0x0000 0000

31	30	29	28	27	26	25	24	23	22	21	20	19	18	17	16
Res.	Res.	Res.	Res.	Res.	Res.	Res.	Res.	Res.	Res.	Res.	Res.	Res.	Res.	Res.	Res.

15	14	13	12	11	10	9	8	7	6	5	4	3	2	1	0
Res.	Res.	Res.	Res.	Res.	ROVSM	TROVS	OVSS[3:0]				OVSR[2:0]			JOVSE	ROVSE
					rw	rw	rw	rw	rw	rw	rw	rw	rw	rw	rw

Bits 31:28 Reserved, must be kept at reset value.

Bits 27:17 Reserved, must be kept at reset value.

Bits 16:11 Reserved, must be kept at reset value.

Bit 10 **ROVSM**: Regular Oversampling mode

This bit is set and cleared by software to select the regular oversampling mode.

0: Continued mode: When injected conversions are triggered, the oversampling is temporary stopped and continued after the injection sequence (oversampling buffer is maintained during injected sequence)

1: Resumed mode: When injected conversions are triggered, the current oversampling is aborted and resumed from start after the injection sequence (oversampling buffer is zeroed by injected sequence start)

Note: The software is allowed to write this bit only when ADSTART=0 (which ensures that no conversion is ongoing).

Bit 9 **TROVS**: Triggered Regular Oversampling

This bit is set and cleared by software to enable triggered oversampling

0: All oversampled conversions for a channel are done consecutively following a trigger

1: Each oversampled conversion for a channel needs a new trigger

Note: The software is allowed to write this bit only when ADSTART=0 (which ensures that no conversion is ongoing).

Bits 8:5 **OVSS[3:0]**: Oversampling shift

This bitfield is set and cleared by software to define the right shifting applied to the raw oversampling result.

0000: No shift
0001: Shift 1-bit
0010: Shift 2-bits
0011: Shift 3-bits
0100: Shift 4-bits
0101: Shift 5-bits
0110: Shift 6-bits
0111: Shift 7-bits
1000: Shift 8-bits
Other codes reserved

Note: The software is allowed to write these bits only when ADSTART=0 (which ensures that no conversion is ongoing).

Bits 4:2 **OVSR[2:0]**: Oversampling ratio

This bitfield is set and cleared by software to define the oversampling ratio.

000: 2x
001: 4x
010: 8x
011: 16x
100: 32x
101: 64x
110: 128x
111: 256x

Note: The software is allowed to write these bits only when ADSTART=0 (which ensures that no conversion is ongoing).

Bit 1 **JOVSE**: Injected Oversampling Enable

This bit is set and cleared by software to enable injected oversampling.

0: Injected Oversampling disabled
1: Injected Oversampling enabled

Note: The software is allowed to write this bit only when ADSTART=0 and JADSTART=0 (which ensures that no conversion is ongoing)

Bit 0 **ROVSE**: Regular Oversampling Enable

This bit is set and cleared by software to enable regular oversampling.

0: Regular Oversampling disabled
1: Regular Oversampling enabled

Note: The software is allowed to write this bit only when ADSTART=0 and JADSTART=0 (which ensures that no conversion is ongoing)

18.6.6 ADC sample time register 1 (ADC_SMPR1)

Address offset: 0x14

Reset value: 0x0000 0000

31	30	29	28	27	26	25	24	23	22	21	20	19	18	17	16
SMPPLUS	Res.	SMP9[2:0]			SMP8[2:0]			SMP7[2:0]			SMP6[2:0]			SMP5[2:1]	
rw		rw	rw	rw	rw	rw	rw	rw	rw	rw	rw	rw	rw	rw	rw

15	14	13	12	11	10	9	8	7	6	5	4	3	2	1	0
SMP5[0]	SMP4[2:0]			SMP3[2:0]			SMP2[2:0]			SMP1[2:0]			SMP0[2:0]		
rw	rw	rw	rw	rw	rw	rw	rw	rw	rw	rw	rw	rw	rw	rw	rw

Bit 31 **SMPPLUS:** Addition of one clock cycle to the sampling time.

1: 2.5 ADC clock cycle sampling time becomes 3.5 ADC clock cycles for the ADC_SMPR1 and ADC_SMPR2 registers.

0: The sampling time remains set to 2.5 ADC clock cycles remains

To make sure no conversion is ongoing, the software is allowed to write this bit only when ADSTART= 0 and JADSTART= 0.

Bit 30 Reserved, must be kept at reset value.

Bits 29:0 **SMP[9:0][2:0]:** Channel x sampling time selection

These bits are written by software to select the sampling time individually for each channel. During sample cycles, the channel selection bits must remain unchanged.

000: 2.5 ADC clock cycles
001: 6.5 ADC clock cycles
010: 12.5 ADC clock cycles
011: 24.5 ADC clock cycles
100: 47.5 ADC clock cycles
101: 92.5 ADC clock cycles
110: 247.5 ADC clock cycles
111: 640.5 ADC clock cycles

Note: The software is allowed to write these bits only when ADSTART=0 and JADSTART=0 (which ensures that no conversion is ongoing).

Some channels are not connected physically. Keep the corresponding SMPx[2:0] setting to the reset value.

18.6.7 ADC sample time register 2 (ADC_SMPR2)

Address offset: 0x18

Reset value: 0x0000 0000

31	30	29	28	27	26	25	24	23	22	21	20	19	18	17	16
Res.	Res.	Res.	Res.	Res.	SMP18[2:0]			SMP17[2:0]			SMP16[2:0]			SMP15[2:1]	
					rw	rw	rw	rw	rw	rw	rw	rw	rw	rw	rw

15	14	13	12	11	10	9	8	7	6	5	4	3	2	1	0
SMP15[0]	SMP14[2:0]			SMP13[2:0]			SMP12[2:0]			SMP11[2:0]			SMP10[2:0]		
rw	rw	rw	rw	rw	rw	rw	rw	rw	rw	rw	rw	rw	rw	rw	rw

Bits 31:27 Reserved, must be kept at reset value.

Bits 26:0 **SMP[18:10][2:0]:** Channel x sampling time selection

These bits are written by software to select the sampling time individually for each channel. During sampling cycles, the channel selection bits must remain unchanged.

000: 2.5 ADC clock cycles
001: 6.5 ADC clock cycles
010: 12.5 ADC clock cycles
011: 24.5 ADC clock cycles
100: 47.5 ADC clock cycles
101: 92.5 ADC clock cycles
110: 247.5 ADC clock cycles
111: 640.5 ADC clock cycles

Note: The software is allowed to write these bits only when ADSTART=0 and JADSTART=0 (which ensures that no conversion is ongoing).

Some channels are not connected physically. Keep the corresponding SMPx[2:0] setting to the reset value.

18.6.8 ADC watchdog threshold register 1 (ADC_TR1)

Address offset: 0x20

Reset value: 0x0FFF 0000

31	30	29	28	27	26	25	24	23	22	21	20	19	18	17	16
Res.	Res.	Res.	Res.	HT1[11:0]											
				rw	rw	rw	rw	rw	rw	rw	rw	rw	rw	rw	rw
15	14	13	12	11	10	9	8	7	6	5	4	3	2	1	0
Res.	Res.	Res.	Res.	LT1[11:0]											
				rw	rw	rw	rw	rw	rw	rw	rw	rw	rw	rw	rw

Bits 31:28 Reserved, must be kept at reset value.

Bits 27:16 **HT1[11:0]**: Analog watchdog 1 higher threshold

These bits are written by software to define the higher threshold for the analog watchdog 1.

Refer to *Section 18.4.29: Analog window watchdog (AWD1EN, JAWD1EN, AWD1SGL, AWD1CH, AWD2CH, AWD3CH, AWD_HTx, AWD_LTx, AWDx)*

Note: The software is allowed to write these bits only when ADSTART=0 and JADSTART=0 (which ensures that no conversion is ongoing).

Bits 15:12 Reserved, must be kept at reset value.

Bits 11:0 **LT1[11:0]**: Analog watchdog 1 lower threshold

These bits are written by software to define the lower threshold for the analog watchdog 1.

Refer to *Section 18.4.29: Analog window watchdog (AWD1EN, JAWD1EN, AWD1SGL, AWD1CH, AWD2CH, AWD3CH, AWD_HTx, AWD_LTx, AWDx)*

Note: The software is allowed to write these bits only when ADSTART=0 and JADSTART=0 (which ensures that no conversion is ongoing).

18.6.9 ADC watchdog threshold register 2 (ADC_TR2)

Address offset: 0x24

Reset value: 0x00FF 0000

31	30	29	28	27	26	25	24	23	22	21	20	19	18	17	16
Res.	Res.	Res.	Res.	Res.	Res.	Res.	Res.	HT2[7:0]							
								rw	rw	rw	rw	rw	rw	rw	rw
15	14	13	12	11	10	9	8	7	6	5	4	3	2	1	0
Res.	Res.	Res.	Res.	Res.	Res.	Res.	Res.	LT2[7:0]							
								rw	rw	rw	rw	rw	rw	rw	rw

Bits 31:24 Reserved, must be kept at reset value.

Bits 23:16 **HT2[7:0]**: Analog watchdog 2 higher threshold

These bits are written by software to define the higher threshold for the analog watchdog 2.

Refer to *Section 18.4.29: Analog window watchdog (AWD1EN, JAWD1EN, AWD1SGL, AWD1CH, AWD2CH, AWD3CH, AWD_HTx, AWD_LTx, AWDx)*

Note: The software is allowed to write these bits only when ADSTART=0 and JADSTART=0 (which ensures that no conversion is ongoing).

Bits 15:8 Reserved, must be kept at reset value.

Bits 7:0 **LT2[7:0]**: Analog watchdog 2 lower threshold

These bits are written by software to define the lower threshold for the analog watchdog 2.

Refer to *Section 18.4.29: Analog window watchdog (AWD1EN, JAWD1EN, AWD1SGL, AWD1CH, AWD2CH, AWD3CH, AWD_HTx, AWD_LTx, AWDx)*

Note: The software is allowed to write these bits only when ADSTART=0 and JADSTART=0 (which ensures that no conversion is ongoing).

18.6.10 ADC watchdog threshold register 3 (ADC_TR3)

Address offset: 0x28

Reset value: 0x00FF 0000

31	30	29	28	27	26	25	24	23	22	21	20	19	18	17	16
Res.	Res.	Res.	Res.	Res.	Res.	Res.	Res.	HT3[7:0]							
								rw	rw	rw	rw	rw	rw	rw	rw
15	14	13	12	11	10	9	8	7	6	5	4	3	2	1	0
Res.	Res.	Res.	Res.	Res.	Res.	Res.	Res.	LT3[7:0]							
								rw	rw	rw	rw	rw	rw	rw	rw

Bits 31:24 Reserved, must be kept at reset value.

Bits 23:16 **HT3[7:0]**: Analog watchdog 3 higher threshold

These bits are written by software to define the higher threshold for the analog watchdog 3.

Refer to *Section 18.4.29: Analog window watchdog (AWD1EN, JAWD1EN, AWD1SGL, AWD1CH, AWD2CH, AWD3CH, AWD_HTx, AWD_LTx, AWDx)*

Note: The software is allowed to write these bits only when ADSTART=0 and JADSTART=0 (which ensures that no conversion is ongoing).

Bits 15:8 Reserved, must be kept at reset value.

Bits 7:0 **LT3[7:0]**: Analog watchdog 3 lower threshold

These bits are written by software to define the lower threshold for the analog watchdog 3.

This watchdog compares the 8-bit of LT3 with the 8 MSB of the converted data.

Note: The software is allowed to write these bits only when ADSTART=0 and JADSTART=0 (which ensures that no conversion is ongoing).

18.6.11 ADC regular sequence register 1 (ADC_SQR1)

Address offset: 0x30

Reset value: 0x0000 0000

31	30	29	28	27	26	25	24	23	22	21	20	19	18	17	16
Res.	Res.	Res.	SQ4[4:0]					Res.	SQ3[4:0]					Res.	SQ2[4]
			rw	rw	rw	rw	rw		rw	rw	rw	rw	rw		rw

15	14	13	12	11	10	9	8	7	6	5	4	3	2	1	0
SQ2[3:0]				Res.	SQ1[4:0]					Res.	Res.	L[3:0]			
rw	rw	rw	rw		rw	rw	rw	rw	rw			rw	rw	rw	rw

Bits 31:29 Reserved, must be kept at reset value.

Bits 28:24 **SQ4[4:0]:** 4th conversion in regular sequence

These bits are written by software with the channel number (0 to 18) assigned as the 4th in the regular conversion sequence.

Note: The software is allowed to write these bits only when ADSTART=0 (which ensures that no regular conversion is ongoing).

Bit 23 Reserved, must be kept at reset value.

Bits 22:18 **SQ3[4:0]:** 3rd conversion in regular sequence

These bits are written by software with the channel number (0 to 18) assigned as the 3rd in the regular conversion sequence.

Note: The software is allowed to write these bits only when ADSTART=0 (which ensures that no regular conversion is ongoing).

Bit 17 Reserved, must be kept at reset value.

Bits 16:12 **SQ2[4:0]:** 2nd conversion in regular sequence

These bits are written by software with the channel number (0 to 18) assigned as the 2nd in the regular conversion sequence.

Note: The software is allowed to write these bits only when ADSTART=0 (which ensures that no regular conversion is ongoing).

Bit 11 Reserved, must be kept at reset value.

Bits 10:6 **SQ1[4:0]:** 1st conversion in regular sequence

These bits are written by software with the channel number (0 to 18) assigned as the 1st in the regular conversion sequence.

Note: The software is allowed to write these bits only when ADSTART=0 (which ensures that no regular conversion is ongoing).

Bits 5:4 Reserved, must be kept at reset value.

Bits 3:0 **L[3:0]:** Regular channel sequence length

These bits are written by software to define the total number of conversions in the regular channel conversion sequence.

0000: 1 conversion
0001: 2 conversions
...
1111: 16 conversions

Note: The software is allowed to write these bits only when ADSTART=0 (which ensures that no regular conversion is ongoing).

Note: Some channels are not connected physically and must not be selected for conversion.

18.6.12 ADC regular sequence register 2 (ADC_SQR2)

Address offset: 0x34

Reset value: 0x0000 0000

31	30	29	28	27	26	25	24	23	22	21	20	19	18	17	16
Res.	Res.	Res.	SQ9[4:0]					Res.	SQ8[4:0]					Res.	SQ7[4]
			rw	rw	rw	rw	rw		rw	rw	rw	rw	rw		rw

15	14	13	12	11	10	9	8	7	6	5	4	3	2	1	0
SQ7[3:0]				Res.	SQ6[4:0]					Res.	SQ5[4:0]				
rw	rw	rw	rw		rw	rw	rw	rw	rw		rw	rw	rw	rw	rw

Bits 31:29 Reserved, must be kept at reset value.

Bits 28:24 **SQ9[4:0]:** 9th conversion in regular sequence

These bits are written by software with the channel number (0 to 18) assigned as the 9th in the regular conversion sequence.

Note: The software is allowed to write these bits only when ADSTART=0 (which ensures that no regular conversion is ongoing).

Bit 23 Reserved, must be kept at reset value.

Bits 22:18 **SQ8[4:0]:** 8th conversion in regular sequence

These bits are written by software with the channel number (0 to 18) assigned as the 8th in the regular conversion sequence

Note: The software is allowed to write these bits only when ADSTART=0 (which ensures that no regular conversion is ongoing).

Bit 17 Reserved, must be kept at reset value.

Bits 16:12 **SQ7[4:0]:** 7th conversion in regular sequence

These bits are written by software with the channel number (0 to 18) assigned as the 7th in the regular conversion sequence.

Note: The software is allowed to write these bits only when ADSTART=0 (which ensures that no regular conversion is ongoing).

Bit 11 Reserved, must be kept at reset value.

Bits 10:6 **SQ6[4:0]:** 6th conversion in regular sequence

These bits are written by software with the channel number (0 to 18) assigned as the 6th in the regular conversion sequence.

Note: The software is allowed to write these bits only when ADSTART=0 (which ensures that no regular conversion is ongoing).

Bit 5 Reserved, must be kept at reset value.

Bits 4:0 **SQ5[4:0]:** 5th conversion in regular sequence

These bits are written by software with the channel number (0 to 18) assigned as the 5th in the regular conversion sequence.

Note: The software is allowed to write these bits only when ADSTART=0 (which ensures that no regular conversion is ongoing).

Note: Some channels are not connected physically and must not be selected for conversion.

18.6.13 ADC regular sequence register 3 (ADC_SQR3)

Address offset: 0x38

Reset value: 0x0000 0000

31	30	29	28	27	26	25	24	23	22	21	20	19	18	17	16
Res.	Res.	Res.	SQ14[4:0]					Res.	SQ13[4:0]					Res.	SQ12[4]
			rw	rw	rw	rw	rw		rw	rw	rw	rw	rw		rw

15	14	13	12	11	10	9	8	7	6	5	4	3	2	1	0
SQ12[3:0]				Res.	SQ11[4:0]					Res.	SQ10[4:0]				
rw	rw	rw	rw		rw	rw	rw	rw	rw		rw	rw	rw	rw	rw

Bits 31:29 Reserved, must be kept at reset value.

Bits 28:24 **SQ14[4:0]:** 14th conversion in regular sequence

These bits are written by software with the channel number (0 to 18) assigned as the 14th in the regular conversion sequence.

Note: The software is allowed to write these bits only when ADSTART=0 (which ensures that no regular conversion is ongoing).

Bit 23 Reserved, must be kept at reset value.

Bits 22:18 **SQ13[4:0]:** 13th conversion in regular sequence

These bits are written by software with the channel number (0 to 18) assigned as the 13th in the regular conversion sequence.

Note: The software is allowed to write these bits only when ADSTART=0 (which ensures that no regular conversion is ongoing).

Bit 17 Reserved, must be kept at reset value.

Bits 16:12 **SQ12[4:0]:** 12th conversion in regular sequence

These bits are written by software with the channel number (0 to 18) assigned as the 12th in the regular conversion sequence.

Note: The software is allowed to write these bits only when ADSTART=0 (which ensures that no regular conversion is ongoing).

Bit 11 Reserved, must be kept at reset value.

Bits 10:6 **SQ11[4:0]:** 11th conversion in regular sequence

These bits are written by software with the channel number (0 to 18) assigned as the 11th in the regular conversion sequence.

Note: The software is allowed to write these bits only when ADSTART=0 (which ensures that no regular conversion is ongoing).

Bit 5 Reserved, must be kept at reset value.

Bits 4:0 **SQ10[4:0]:** 10th conversion in regular sequence

These bits are written by software with the channel number (0 to 18) assigned as the 10th in the regular conversion sequence.

Note: The software is allowed to write these bits only when ADSTART=0 (which ensures that no regular conversion is ongoing).

Note: Some channels are not connected physically and must not be selected for conversion.

18.6.14 ADC regular sequence register 4 (ADC_SQR4)

Address offset: 0x3C

Reset value: 0x0000 0000

31	30	29	28	27	26	25	24	23	22	21	20	19	18	17	16
Res.	Res.	Res.	Res.	Res.	Res.	Res.	Res.	Res.	Res.	Res.	Res.	Res.	Res.	Res.	Res.

15	14	13	12	11	10	9	8	7	6	5	4	3	2	1	0
Res.	Res.	Res.	Res.	Res.	SQ16[4:0]					Res.	SQ15[4:0]				
					rw	rw	rw	rw	rw		rw	rw	rw	rw	rw

Bits 31:11 Reserved, must be kept at reset value.

Bits 10:6 **SQ16[4:0]:** 16th conversion in regular sequence

These bits are written by software with the channel number (0 to 18) assigned as the 16th in the regular conversion sequence.

Note: The software is allowed to write these bits only when ADSTART=0 (which ensures that no regular conversion is ongoing).

Bit 5 Reserved, must be kept at reset value.

Bits 4:0 **SQ15[4:0]:** 15th conversion in regular sequence

These bits are written by software with the channel number (0 to 18) assigned as the 15th in the regular conversion sequence.

Note: The software is allowed to write these bits only when ADSTART=0 (which ensures that no regular conversion is ongoing).

Note: Some channels are not connected physically and must not be selected for conversion.

18.6.15 ADC regular data register (ADC_DR)

Address offset: 0x40

Reset value: 0x0000 0000

31	30	29	28	27	26	25	24	23	22	21	20	19	18	17	16
Res.	Res.	Res.	Res.	Res.	Res.	Res.	Res.	Res.	Res.	Res.	Res.	Res.	Res.	Res.	Res.

15	14	13	12	11	10	9	8	7	6	5	4	3	2	1	0
RDATA[15:0]															
r	r	r	r	r	r	r	r	r	r	r	r	r	r	r	r

Bits 31:16 Reserved, must be kept at reset value.

Bits 15:0 **RDATA[15:0]**: Regular data converted

These bits are read-only. They contain the conversion result from the last converted regular channel. The data are left- or right-aligned as described in *Section 18.4.26: Data management*.

18.6.16 ADC injected sequence register (ADC_JSQR)

Address offset: 0x4C

Reset value: 0x0000 0000

31	30	29	28	27	26	25	24	23	22	21	20	19	18	17	16
Res.	JSQ4[4:0]					Res.	JSQ3[4:0]					Res.	JSQ2[4:2]		
	rw	rw	rw	rw	rw		rw	rw	rw	rw	rw		rw	rw	rw

15	14	13	12	11	10	9	8	7	6	5	4	3	2	1	0
JSQ2[1:0]		Res.	JSQ1[4:0]					JEXTEN[1:0]		JEXTSEL[3:0]				JL[1:0]	
rw	rw		rw	rw	rw	rw	rw	rw	rw	rw	rw	rw	rw	rw	rw

Bit 31 Reserved, must be kept at reset value.

Bits 30:26 **JSQ4[4:0]:** 4th conversion in the injected sequence

These bits are written by software with the channel number (0 to 18) assigned as the 4th in the injected conversion sequence.

Note: The software is allowed to write these bits only when JADSTART=0 (which ensures that no injected conversion is ongoing).

Bit 25 Reserved, must be kept at reset value.

Bits 24:20 **JSQ3[4:0]:** 3rd conversion in the injected sequence

These bits are written by software with the channel number (0 to 18) assigned as the 3rd in the injected conversion sequence.

Note: The software is allowed to write these bits only when JADSTART=0 (which ensures that no injected conversion is ongoing).

Bit 19 Reserved, must be kept at reset value.

Bits 18:14 **JSQ2[4:0]:** 2nd conversion in the injected sequence

These bits are written by software with the channel number (0 to 18) assigned as the 2nd in the injected conversion sequence.

Note: The software is allowed to write these bits only when JADSTART=0 (which ensures that no injected conversion is ongoing).

Bit 13 Reserved, must be kept at reset value.

Bits 12:8 **JSQ1[4:0]:** 1st conversion in the injected sequence

These bits are written by software with the channel number (0 to 18) assigned as the 1st in the injected conversion sequence.

Note: The software is allowed to write these bits only when JADSTART=0 (which ensures that no injected conversion is ongoing).

Bits 7:6 **JEXTEN[1:0]**: External Trigger Enable and Polarity Selection for injected channels

These bits are set and cleared by software to select the external trigger polarity and enable the trigger of an injected group.

00: If JQDIS=0 (queue enabled), Hardware and software trigger detection disabled
00: If JQDIS=1 (queue disabled), Hardware trigger detection disabled (conversions can be launched by software)
01: Hardware trigger detection on the rising edge
10: Hardware trigger detection on the falling edge
11: Hardware trigger detection on both the rising and falling edges

Note: The software is allowed to write these bits only when JADSTART=0 (which ensures that no injected conversion is ongoing).

If JQM=1 and if the Queue of Context becomes empty, the software and hardware triggers of the injected sequence are both internally disabled (refer to Section 18.4.21: Queue of context for injected conversions)

Bits 5:2 **JEXTSEL[3:0]**: External Trigger Selection for injected group

These bits select the external event used to trigger the start of conversion of an injected group:

0000: Event 0
0001: Event 1
0010: Event 2
0011: Event 3
0100: Event 4
0101: Event 5
0110: Event 6
0111: Event 7
...
1111: Event 15

Note: The software is allowed to write these bits only when JADSTART=0 (which ensures that no injected conversion is ongoing).

Bits 1:0 **JL[1:0]:** Injected channel sequence length

These bits are written by software to define the total number of conversions in the injected channel conversion sequence.

00: 1 conversion
01: 2 conversions
10: 3 conversions
11: 4 conversions

Note: The software is allowed to write these bits only when JADSTART=0 (which ensures that no injected conversion is ongoing).

Note: Some channels are not connected physically and must not be selected for conversion.

18.6.17 ADC offset y register (ADC_OFRy)

Address offset: 0x60 + 0x04 * (y -1), (y= 1 to 4)

Reset value: 0x0000 0000

31	30	29	28	27	26	25	24	23	22	21	20	19	18	17	16
OFFSETy_EN	OFFSETy_CH[4:0]					Res.	Res.	Res.	Res.	Res.	Res.	Res.	Res.	Res.	Res.
rw	rw	rw	rw	rw	rw										

15	14	13	12	11	10	9	8	7	6	5	4	3	2	1	0
Res.	Res.	Res.	Res.	OFFSETy[11:0]											
				rw	rw	rw	rw	rw	rw	rw	rw	rw	rw	rw	rw

Bit 31 **OFFSETy_EN:** Offset y enable

This bit is written by software to enable or disable the offset programmed into bits OFFSETy[11:0].

Note: The software is allowed to write this bit only when ADSTART=0 and JADSTART=0 (which ensures that no conversion is ongoing).

Bits 30:26 **OFFSETy_CH[4:0]:** Channel selection for the data offset y

These bits are written by software to define the channel to which the offset programmed into bits OFFSETy[11:0] will apply.

Note: The software is allowed to write these bits only when ADSTART=0 and JADSTART=0 (which ensures that no conversion is ongoing).

Some channels are not connected physically and must not be selected for the data offset y.

Bits 25:12 Reserved, must be kept at reset value.

Bits 11:0 **OFFSETy[11:0]:** Data offset y for the channel programmed into bits OFFSETy_CH[4:0]

These bits are written by software to define the offset y to be subtracted from the raw converted data when converting a channel (can be regular or injected). The channel to which applies the data offset y must be programmed in the bits OFFSETy_CH[4:0]. The conversion result can be read from in the ADC_DR (regular conversion) or from in the ADC_JDRyi registers (injected conversion).

Note: The software is allowed to write these bits only when ADSTART=0 and JADSTART=0 (which ensures that no conversion is ongoing).

If several offset (OFFSETy) point to the same channel, only the offset with the lowest x value is considered for the subtraction.
Ex: if OFFSET1_CH[4:0]=4 and OFFSET2_CH[4:0]=4, this is OFFSET1[11:0] which is subtracted when converting channel 4.

18.6.18 ADC injected channel y data register (ADC_JDRy)

Address offset: 0x80 + 0x04 * (y - 1), (y = 1 to 4)

Reset value: 0x0000 0000

31	30	29	28	27	26	25	24	23	22	21	20	19	18	17	16
Res.	Res.	Res.	Res.	Res.	Res.	Res.	Res.	Res.	Res.	Res.	Res.	Res.	Res.	Res.	Res.

15	14	13	12	11	10	9	8	7	6	5	4	3	2	1	0
JDATA[15:0]															
r	r	r	r	r	r	r	r	r	r	r	r	r	r	r	r

Bits 31:16 Reserved, must be kept at reset value.

Bits 15:0 **JDATA[15:0]:** Injected data

These bits are read-only. They contain the conversion result from injected channel y. The data are left -or right-aligned as described in *Section 18.4.26: Data management*.

18.6.19 ADC Analog Watchdog 2 Configuration Register (ADC_AWD2CR)

Address offset: 0xA0

Reset value: 0x0000 0000

31	30	29	28	27	26	25	24	23	22	21	20	19	18	17	16
Res.	Res.	Res.	Res.	Res.	Res.	Res.	Res.	Res.	Res.	Res.	Res.	Res.	AWD2CH[18:16]		
													rw	rw	rw

15	14	13	12	11	10	9	8	7	6	5	4	3	2	1	0
AWD2CH[15:0]															
rw	rw	rw	rw	rw	rw	rw	rw	rw	rw	rw	rw	rw	rw	rw	rw

Bits 31:19 Reserved, must be kept at reset value.

Bits 18:0 **AWD2CH[18:0]**: Analog watchdog 2 channel selection

These bits are set and cleared by software. They enable and select the input channels to be guarded by the analog watchdog 2.

AWD2CH[i] = 0: ADC analog input channel i is not monitored by AWD2

AWD2CH[i] = 1: ADC analog input channel i is monitored by AWD2

When AWD2CH[18:0] = 000..0, the analog Watchdog 2 is disabled

Note: The channels selected by AWD2CH must be also selected into the SQRi or JSQRi registers.

The software is allowed to write these bits only when ADSTART=0 and JADSTART=0 (which ensures that no conversion is ongoing).

Some channels are not connected physically and must not be selected for the analog watchdog.

18.6.20 ADC Analog Watchdog 3 Configuration Register (ADC_AWD3CR)

Address offset: 0xA4

Reset value: 0x0000 0000

31	30	29	28	27	26	25	24	23	22	21	20	19	18	17	16
Res.	Res.	Res.	Res.	Res.	Res.	Res.	Res.	Res.	Res.	Res.	Res.	Res.	AWD3CH[18:16]		
													rw	rw	rw

15	14	13	12	11	10	9	8	7	6	5	4	3	2	1	0
AWD3CH[15:0]															
rw	rw	rw	rw	rw	rw	rw	rw	rw	rw	rw	rw	rw	rw	rw	rw

Bits 31:19 Reserved, must be kept at reset value.

Bits 18:0 **AWD3CH[18:0]**: Analog watchdog 3 channel selection

These bits are set and cleared by software. They enable and select the input channels to be guarded by the analog watchdog 3.

AWD3CH[i] = 0: ADC analog input channel i is not monitored by AWD3

AWD3CH[i] = 1: ADC analog input channel i is monitored by AWD3

When AWD3CH[18:0] = 000..0, the analog Watchdog 3 is disabled

Note: The channels selected by AWD3CH must be also selected into the SQRi or JSQRi registers.

The software is allowed to write these bits only when ADSTART=0 and JADSTART=0 (which ensures that no conversion is ongoing).

Some channels are not connected physically and must not be selected for the analog watchdog.

18.6.21 ADC Differential mode Selection Register (ADC_DIFSEL)

Address offset: 0xB0

Reset value: 0x0000 0000

31	30	29	28	27	26	25	24	23	22	21	20	19	18	17	16
Res.	Res.	Res.	Res.	Res.	Res.	Res.	Res.	Res.	Res.	Res.	Res.	Res.	DIFSEL[18:16]		
													rw	rw	rw

15	14	13	12	11	10	9	8	7	6	5	4	3	2	1	0
DIFSEL[15:0]															
rw	rw	rw	rw	rw	rw	rw	rw	rw	rw	rw	rw	rw	rw	rw	r

Bits 31:19 Reserved, must be kept at reset value.

Bits 18:0 **DIFSEL[18:0]**: Differential mode for channels 18 to 0.

These bits are set and cleared by software. They allow to select if a channel is configured as single-ended or differential mode.

DIFSEL[i] = 0: ADC analog input channel is configured in single ended mode

DIFSEL[i] = 1: ADC analog input channel i is configured in differential mode

Note: The DIFSEL bits corresponding to channels that are either connected to a single-ended I/O port or to an internal channel must be kept their reset value (single-ended input mode).

The software is allowed to write these bits only when the ADC is disabled (ADCAL=0, JADSTART=0, JADSTP=0, ADSTART=0, ADSTP=0, ADDIS=0 and ADEN=0).

18.6.22 ADC Calibration Factors (ADC_CALFACT)

Address offset: 0xB4

Reset value: 0x0000 0000

31	30	29	28	27	26	25	24	23	22	21	20	19	18	17	16
Res.	Res.	Res.	Res.	Res.	Res.	Res.	Res.	Res.	CALFACT_D[6:0]						
									rw	rw	rw	rw	rw	rw	rw
15	14	13	12	11	10	9	8	7	6	5	4	3	2	1	0
Res.	Res.	Res.	Res.	Res.	Res.	Res.	Res.	Res.	CALFACT_S[6:0]						
									rw	rw	rw	rw	rw	rw	rw

Bits 31:23 Reserved, must be kept at reset value.

Bits 22:16 **CALFACT_D[6:0]**: Calibration Factors in differential mode

These bits are written by hardware or by software.

Once a differential inputs calibration is complete, they are updated by hardware with the calibration factors.

Software can write these bits with a new calibration factor. If the new calibration factor is different from the current one stored into the analog ADC, it will then be applied once a new differential calibration is launched.

Note: The software is allowed to write these bits only when ADEN=1, ADSTART=0 and JADSTART=0 (ADC is enabled and no calibration is ongoing and no conversion is ongoing).

Bits 15:7 Reserved, must be kept at reset value.

Bits 6:0 **CALFACT_S[6:0]**: Calibration Factors In single-ended mode

These bits are written by hardware or by software.

Once a single-ended inputs calibration is complete, they are updated by hardware with the calibration factors.

Software can write these bits with a new calibration factor. If the new calibration factor is different from the current one stored into the analog ADC, it will then be applied once a new single-ended calibration is launched.

Note: The software is allowed to write these bits only when ADEN=1, ADSTART=0 and JADSTART=0 (ADC is enabled and no calibration is ongoing and no conversion is ongoing).

18.7 ADC common registers

These registers define the control and status registers common to master and slave ADCs:

18.7.1 ADC common status register (ADC_CSR)

Address offset: 0x00 (this offset address is relative to the master ADC base address + 0x300)

Reset value: 0x0000 0000

This register provides an image of the status bits of the different ADCs. Nevertheless it is read-only and does not allow to clear the different status bits. Instead each status bit must be cleared by writing 0 to it in the corresponding ADC_ISR register.

31	30	29	28	27	26	25	24	23	22	21	20	19	18	17	16
Res.	Res.	Res.	Res.	Res.	JQOVF_SLV	AWD3_SLV	AWD2_SLV	AWD1_SLV	JEOS_SLV	JEOC_SLV	OVR_SLV	EOS_SLV	EOC_SLV	EOSMP_SLV	ADRDY_SLV
					r	r	r	r	r	r	r	r	r	r	r
15	14	13	12	11	10	9	8	7	6	5	4	3	2	1	0
Res.	Res.	Res.	Res.	Res.	JQOVF_MST	AWD3_MST	AWD2_MST	AWD1_MST	JEOS_MST	JEOC_MST	OVR_MST	EOS_MST	EOC_MST	EOSMP_MST	ADRDY_MST
					r	r	r	r	r	r	r	r	r	r	r

Bits 31:27 Reserved, must be kept at reset value.

Bit 26 **JQOVF_SLV:** Injected Context Queue Overflow flag of the slave ADC
This bit is a copy of the JQOVF bit in the corresponding ADC_ISR register.

Bit 25 **AWD3_SLV:** Analog watchdog 3 flag of the slave ADC
This bit is a copy of the AWD3 bit in the corresponding ADC_ISR register.

Bit 24 **AWD2_SLV:** Analog watchdog 2 flag of the slave ADC
This bit is a copy of the AWD2 bit in the corresponding ADC_ISR register.

Bit 23 **AWD1_SLV:** Analog watchdog 1 flag of the slave ADC
This bit is a copy of the AWD1 bit in the corresponding ADC_ISR register.

Bit 22 **JEOS_SLV:** End of injected sequence flag of the slave ADC
This bit is a copy of the JEOS bit in the corresponding ADC_ISR register.

Bit 21 **JEOC_SLV:** End of injected conversion flag of the slave ADC
This bit is a copy of the JEOC bit in the corresponding ADC_ISR register.

Bit 20 **OVR_SLV:** Overrun flag of the slave ADC
This bit is a copy of the OVR bit in the corresponding ADC_ISR register.

Bit 19 **EOS_SLV:** End of regular sequence flag of the slave ADC. This bit is a copy of the EOS bit in the corresponding ADC_ISR register.

Bit 18 **EOC_SLV:** End of regular conversion of the slave ADC
This bit is a copy of the EOC bit in the corresponding ADC_ISR register.

Bit 17 **EOSMP_SLV:** End of Sampling phase flag of the slave ADC
This bit is a copy of the EOSMP2 bit in the corresponding ADC_ISR register.

Bit 16 **ADRDY_SLV:** Slave ADC ready
This bit is a copy of the ADRDY bit in the corresponding ADC_ISR register.

Bits 15:11 Reserved, must be kept at reset value.

Bit 10 **JQOVF_MST:** Injected Context Queue Overflow flag of the master ADC
This bit is a copy of the JQOVF bit in the corresponding ADC_ISR register.

Bit 9 **AWD3_MST:** Analog watchdog 3 flag of the master ADC
This bit is a copy of the AWD3 bit in the corresponding ADC_ISR register.

Bit 8 **AWD2_MST:** Analog watchdog 2 flag of the master ADC
This bit is a copy of the AWD2 bit in the corresponding ADC_ISR register.

Bit 7 **AWD1_MST:** Analog watchdog 1 flag of the master ADC
This bit is a copy of the AWD1 bit in the corresponding ADC_ISR register.

Bit 6 **JEOS_MST:** End of injected sequence flag of the master ADC
This bit is a copy of the JEOS bit in the corresponding ADC_ISR register.

Bit 5 **JEOC_MST:** End of injected conversion flag of the master ADC
This bit is a copy of the JEOC bit in the corresponding ADC_ISR register.

Bit 4 **OVR_MST:** Overrun flag of the master ADC
This bit is a copy of the OVR bit in the corresponding ADC_ISR register.

Bit 3 **EOS_MST:** End of regular sequence flag of the master ADC
This bit is a copy of the EOS bit in the corresponding ADC_ISR register.

Bit 2 **EOC_MST:** End of regular conversion of the master ADC
This bit is a copy of the EOC bit in the corresponding ADC_ISR register.

Bit 1 **EOSMP_MST:** End of Sampling phase flag of the master ADC
This bit is a copy of the EOSMP bit in the corresponding ADC_ISR register.

Bit 0 **ADRDY_MST:** Master ADC ready
This bit is a copy of the ADRDY bit in the corresponding ADC_ISR register.

18.7.2 ADC common control register (ADC_CCR)

Address offset: 0x08 (this offset address is relative to the master ADC base address + 0x300)

Reset value: 0x0000 0000

31	30	29	28	27	26	25	24	23	22	21	20	19	18	17	16
Res.	Res.	Res.	Res.	Res.	Res.	Res.	CH18SEL	CH17SEL	VREFEN	PRESC[3:0]				CKMODE[1:0]	
							rw	rw	rw	rw	rw	rw	rw	rw	rw

15	14	13	12	11	10	9	8	7	6	5	4	3	2	1	0
MDMA[1:0]		DMACFG	Res.	DELAY[3:0]				Res.	Res.	Res.	DUAL[4:0]				
rw	rw	rw		rw	rw	rw	rw				rw	rw	rw	rw	rw

Bits 31:25 Reserved, must be kept at reset value.

Bit 24 **CH18SEL**: CH18 selection
This bit is set and cleared by software to control channel 18.
0: V_{BAT} channel disabled.
1: V_{BAT} channel enabled

Bit 23 **CH17SEL**: CH17 selection
This bit is set and cleared by software to control channel 17.
0: Temperature sensor channel disabled
1: Temperature sensor channel enabled

Bit 22 **VREFEN**: V_{REFINT} enable
This bit is set and cleared by software to enable/disable the V_{REFINT} channel.
0: V_{REFINT} channel disabled
1: V_{REFINT} channel enabled

Bits 21:18 **PRESC[3:0]**: ADC prescaler

These bits are set and cleared by software to select the frequency of the clock to the ADC. The clock is common for all the ADCs.

0000: input ADC clock not divided
0001: input ADC clock divided by 2
0010: input ADC clock divided by 4
0011: input ADC clock divided by 6
0100: input ADC clock divided by 8
0101: input ADC clock divided by 10
0110: input ADC clock divided by 12
0111: input ADC clock divided by 16
1000: input ADC clock divided by 32
1001: input ADC clock divided by 64
1010: input ADC clock divided by 128
1011: input ADC clock divided by 256
other: reserved

Note: The software is allowed to write these bits only when the ADC is disabled (ADCAL=0, JADSTART=0, ADSTART=0, ADSTP=0, ADDIS=0 and ADEN=0). The ADC prescaler value is applied only when CKMODE[1:0] = 0b00.

Bits 17:16 **CKMODE[1:0]:** ADC clock mode

These bits are set and cleared by software to define the ADC clock scheme (which is common to both master and slave ADCs):

00: CK_ADCx (x=123) (Asynchronous clock mode), generated at product level (refer to *Section 6: Reset and clock control (RCC)*)

01: HCLK/1 (Synchronous clock mode). This configuration must be enabled only if the AHB clock prescaler is set to 1 (HPRE[3:0] = 0xxx in RCC_CFGR register) and if the system clock has a 50% duty cycle.

10: HCLK/2 (Synchronous clock mode)

11: HCLK/4 (Synchronous clock mode)

In all synchronous clock modes, there is no jitter in the delay from a timer trigger to the start of a conversion.

Note: The software is allowed to write these bits only when the ADCs are disabled (ADCAL=0, JADSTART=0, ADSTART=0, ADSTP=0, ADDIS=0 and ADEN=0).

Bits 15:14 **MDMA[1:0]:** Direct memory access mode for dual ADC mode

This bitfield is set and cleared by software. Refer to the DMA controller section for more details.

00: MDMA mode disabled
01: Enable dual interleaved mode to output to the master channel of DFSDM interface both Master and the Slave result (16-bit data width)
10: MDMA mode enabled for 12 and 10-bit resolution
11: MDMA mode enabled for 8 and 6-bit resolution

Note: The software is allowed to write these bits only when ADSTART=0 (which ensures that no regular conversion is ongoing).

Bit 13 **DMACFG**: DMA configuration (for dual ADC mode)

This bit is set and cleared by software to select between two DMA modes of operation and is effective only when DMAEN=1.

0: DMA One Shot mode selected
1: DMA Circular mode selected

For more details, refer to *Section : Managing conversions using the DMA*

Note: The software is allowed to write these bits only when ADSTART=0 (which ensures that no regular conversion is ongoing).

Bit 12 Reserved, must be kept at reset value.

Bits 11:8 **DELAY:** Delay between 2 sampling phases

These bits are set and cleared by software. These bits are used in dual interleaved modes. Refer to *Table 118* for the value of ADC resolution versus DELAY bits values.

Note: The software is allowed to write these bits only when the ADCs are disabled (ADCAL=0, JADSTART=0, ADSTART=0, ADSTP=0, ADDIS=0 and ADEN=0).

Bits 7:5 Reserved, must be kept at reset value.

Bits 4:0 **DUAL[4:0]:** Dual ADC mode selection

These bits are written by software to select the operating mode.
All the ADCs independent:
00000: Independent mode

00001 to 01001: Dual mode, master and slave ADCs working together
00001: Combined regular simultaneous + injected simultaneous mode
00010: Combined regular simultaneous + alternate trigger mode
00011: Combined Interleaved mode + injected simultaneous mode
00100: Reserved
00101: Injected simultaneous mode only
00110: Regular simultaneous mode only
00111: Interleaved mode only
01001: Alternate trigger mode only
All other combinations are reserved and must not be programmed

Note: The software is allowed to write these bits only when the ADCs are disabled (ADCAL=0, JADSTART=0, ADSTART=0, ADSTP=0, ADDIS=0 and ADEN=0).

Table 118. DELAY bits versus ADC resolution

DELAY bits	12-bit resolution	10-bit resolution	8-bit resolution	6-bit resolution
0000	1 * T_{ADC_CLK}	1 * T_{ADC_CLK}	1 * T_{ADC_CLK}	1 * T_{ADC_CLK}
0001	2 * T_{ADC_CLK}	2 * T_{ADC_CLK}	2 * T_{ADC_CLK}	2 * T_{ADC_CLK}
0010	3 * T_{ADC_CLK}	3 * T_{ADC_CLK}	3 * T_{ADC_CLK}	3 * T_{ADC_CLK}
0011	4 * T_{ADC_CLK}	4 * T_{ADC_CLK}	4 * T_{ADC_CLK}	4 * T_{ADC_CLK}
0100	5 * T_{ADC_CLK}	5 * T_{ADC_CLK}	5 * T_{ADC_CLK}	5 * T_{ADC_CLK}
0101	6 * T_{ADC_CLK}	6 * T_{ADC_CLK}	6 * T_{ADC_CLK}	6 * T_{ADC_CLK}
0110	7 * T_{ADC_CLK}	7 * T_{ADC_CLK}	7 * T_{ADC_CLK}	6 * T_{ADC_CLK}
0111	8 * T_{ADC_CLK}	8 * T_{ADC_CLK}	8 * T_{ADC_CLK}	6 * T_{ADC_CLK}
1000	9 * T_{ADC_CLK}	9 * T_{ADC_CLK}	8 * T_{ADC_CLK}	6 * T_{ADC_CLK}
1001	10 * T_{ADC_CLK}	10 * T_{ADC_CLK}	8 * T_{ADC_CLK}	6 * T_{ADC_CLK}
1010	11 * T_{ADC_CLK}	10 * T_{ADC_CLK}	8 * T_{ADC_CLK}	6 * T_{ADC_CLK}
1011	12 * T_{ADC_CLK}	10 * T_{ADC_CLK}	8 * T_{ADC_CLK}	6 * T_{ADC_CLK}
others	12 * T_{ADC_CLK}	10 * T_{ADC_CLK}	8 * T_{ADC_CLK}	6 * T_{ADC_CLK}

18.7.3 ADC common regular data register for dual mode (ADC_CDR)

Address offset: 0x0C (this offset address is relative to the master ADC base address + 0x300)

Reset value: 0x0000 0000

31	30	29	28	27	26	25	24	23	22	21	20	19	18	17	16
RDATA_SLV[15:0]															
r	r	r	r	r	r	r	r	r	r	r	r	r	r	r	r
15	14	13	12	11	10	9	8	7	6	5	4	3	2	1	0
RDATA_MST[15:0]															
r	r	r	r	r	r	r	r	r	r	r	r	r	r	r	r

Bits 31:16 **RDATA_SLV[15:0]:** Regular data of the slave ADC

In dual mode, these bits contain the regular data of the slave ADC. Refer to *Section 18.4.31: Dual ADC modes*.

The data alignment is applied as described in *Section : Data register, data alignment and offset (ADC_DR, OFFSETy, OFFSETy_CH, ALIGN)*)

Bits 15:0 **RDATA_MST[15:0]**: Regular data of the master ADC.

In dual mode, these bits contain the regular data of the master ADC. Refer to *Section 18.4.31: Dual ADC modes*.

The data alignment is applied as described in *Section : Data register, data alignment and offset (ADC_DR, OFFSETy, OFFSETy_CH, ALIGN)*)

In MDMA=0b11 mode, bits 15:8 contains SLV_ADC_DR[7:0], bits 7:0 contains MST_ADC_DR[7:0].

18.8 ADC register map

The following table summarizes the ADC registers.

Table 119. ADC global register map

Offset	Register
0x000 - 0x0B4	Master ADC1
0x0B8 - 0x0FC	Reserved
0x100 - 0x1B4	Slave ADC2
0x1B8 - 0x1FC	Reserved
0x200 - 0x2B4	Single ADC3
0x2B8 - 0x2FC	Reserved
0x300 - 0x30C	Master and slave ADCs common registers

Table 120. ADC register map and reset values for each ADC (offset=0x000 for master ADC, 0x100 for slave ADC)

Offset	Register	31	30	29	28	27	26	25	24	23	22	21	20	19	18	17	16	15	14	13	12	11	10	9	8	7	6	5	4	3	2	1	0
0x00	ADC_ISR	Res.	Res.	Res.	Res.	Res.	Res.	Res.	Res.	Res.	Res.	Res.	Res.	Res.	Res.	Res.	Res.	Res.	Res.	Res.	Res.	Res.	JQOVF	AWD3	AWD2	AWD1	JEOS	JEOC	OVR	EOS	EOC	EOSMP	ADRDY
	Reset value																						0	0	0	0	0	0	0	0	0	0	0
0x04	ADC_IER	Res.	Res.	Res.	Res.	Res.	Res.	Res.	Res.	Res.	Res.	Res.	Res.	Res.	Res.	Res.	Res.	Res.	Res.	Res.	Res.	Res.	JQOVFIE	AWD3IE	AWD2IE	AWD1IE	JEOSIE	JEOCIE	OVRIE	EOSIE	EOCIE	EOSMPIE	ADRDYIE
	Reset value																						0	0	0	0	0	0	0	0	0	0	0
0x08	ADC_CR	ADCAL	ADCALDIF	DEEPPWD	ADVREGEN	Res.	Res.	Res.	Res.	Res.	Res.	Res.	Res.	Res.	Res.	Res.	Res.	Res.	Res.	Res.	Res.	Res.	Res.	Res.	Res.	Res.	Res.	JADSTP	ADSTP	JADSTART	ADSTART	ADDIS	ADEN
	Reset value	0	0	1	0																							0	0	0	0	0	0
0x0C	ADC_CFGR	JQDIS	AWD1CH[4:0]					JAUTO	JAWD1EN	AWD1EN	AWD1SGL	JQM	JDISCEN	DISCNUM [2:0]			DISCEN	Res.	AUTDLY	CONT	OVRMOD	EXTEN[1:0]		EXTSEL3	EXTSEL2	EXTSEL1	EXTSEL0	ALIGN	RES [1:0]		DFSDMCFG	DMACFG	DMAEN
	Reset value	1	0	0	0	0	0	0	0	0	0	0	0	0	0	0	0		0	0	0	0	0	0	0	0	0	0	0	0	0	0	0
0x0C	ADC_CFGR2	Res.	Res.	Res.	Res.	Res.	Res.	Res.	Res.	Res.	Res.	Res.	Res.	Res.	Res.	Res.	Res.	Res.	Res.	Res.	Res.	Res.	ROVSM	TROVS	OVSS[3:0]				OVSR [2:0]			JOVSE	ROVSE
	Reset value																						0	0	0	0	0	0	0	0	0	0	0
0x14	ADC_SMPR1	SMPPLUS	Res.	SMP9 [2:0]			SMP8 [2:0]			SMP7 [2:0]			SMP6 [2:0]			SMP5 [2:0]			SMP4 [2:0]			SMP3 [2:0]			SMP2 [2:0]			SMP1 [2:0]			SMP0 [2:0]		
	Reset value	0		0	0	0	0	0	0	0	0	0	0	0	0	0	0	0	0	0	0	0	0	0	0	0	0	0	0	0	0	0	0
0x18	ADC_SMPR2	Res.	Res.	Res.	Res.	Res.	SMP18 [2:0]			SMP17 [2:0]			SMP16 [2:0]			SMP15 [2:0]			SMP14 [2:0]			SMP13 [2:0]			SMP12 [2:0]			SMP11 [2:0]			SMP10 [2:0]		
	Reset value						0	0	0	0	0	0	0	0	0	0	0	0	0	0	0	0	0	0	0	0	0	0	0	0	0	0	0
0x1C	Reserved	Res.																															
0x20	ADC_TR1	Res.	Res.	Res.	Res.	HT1[11:0]												Res.	Res.	Res.	Res.	LT1[11:0]											
	Reset value					1	1	1	1	1	1	1	1	1	1	1	1					0	0	0	0	0	0	0	0	0	0	0	0
0x24	ADC_TR2	Res.	Res.	Res.	Res.	Res.	Res.	Res.	Res.	HT2[[7:0]								Res.	Res.	Res.	Res.	Res.	Res.	Res.	Res.	LT2[7:0]							
	Reset value									1	1	1	1	1	1	1	1									0	0	0	0	0	0	0	0
0x28	ADC_TR3	Res.	Res.	Res.	Res.	Res.	Res.	Res.	Res.	HT3[[7:0]								Res.	Res.	Res.	Res.	Res.	Res.	Res.	Res.	LT3[7:0]							
	Reset value									1	1	1	1	1	1	1	1									0	0	0	0	0	0	0	0
0x2C	Reserved	Res.																															
0x30	ADC_SQR1	Res.	Res.	Res.	SQ4[4:0]					Res.	SQ3[4:0]					Res.	SQ2[4:0]					Res.	SQ1[4:0]					Res.	Res.	L[3:0]			
	Reset value				0	0	0	0	0		0	0	0	0	0		0	0	0	0	0		0	0	0	0	0			0	0	0	0
0x34	ADC_SQR2	Res.	Res.	Res.	SQ9[4:0]					Res.	SQ8[4:0]					Res.	SQ7[4:0]					Res.	SQ6[4:0]					Res.	SQ5[4:0]				
	Reset value				0	0	0	0	0		0	0	0	0	0		0	0	0	0	0		0	0	0	0	0		0	0	0	0	0
0x38	ADC_SQR3	Res.	Res.	Res.	SQ14[4:0]					Res.	SQ13[4:0]					Res.	SQ12[4:0]					Res.	SQ11[4:0]					Res.	SQ10[4:0]				
	Reset value				0	0	0	0	0		0	0	0	0	0		0	0	0	0	0		0	0	0	0	0		0	0	0	0	0
0x3C	ADC_SQR4	Res.	Res.	Res.	Res.	Res.	Res.	Res.	Res.	Res.	Res.	Res.	Res.	Res.	Res.	Res.	Res.	Res.	Res.	Res.	Res.	Res.	SQ16[4:0]					Res.	SQ15[4:0]				
	Reset value																						0	0	0	0	0		0	0	0	0	0
0x40	ADC_DR	Res.	Res.	Res.	Res.	Res.	Res.	Res.	Res.	Res.	Res.	Res.	Res.	Res.	Res.	Res.	Res.	regular RDATA[15:0]															
	Reset value																	0	0	0	0	0	0	0	0	0	0	0	0	0	0	0	0

Table 120. ADC register map and reset values for each ADC (offset=0x000 for master ADC, 0x100 for slave ADC) (continued)

Offset	Register	31	30	29	28	27	26	25	24	23	22	21	20	19	18	17	16	15	14	13	12	11	10	9	8	7	6	5	4	3	2	1	0
0x44-0x48	Reserved	Res.																															
0x4C	**ADC_JSQR**	Res.	JSQ4[4:0]					Res.	JSQ3[4:0]					Res.	JSQ2[4:0]					Res.	JSQ1[4:0]					JEXTEN[1:0]		JEXTSEL [3:0]				JL[1:0]	
	Reset value		0	0	0	0	0		0	0	0	0	0		0	0	0	0	0		0	0	0	0	0	0	0	0	0	0	0	0	0
0x50-0x5C	Reserved	Res.																															
0x60	**ADC_OFR1**	OFFSET1_EN	OFFSET1_ CH[4:0]					Res.	Res.	Res.	Res.	Res.	Res.	Res.	Res.	Res.	Res.	Res.	Res.	Res.	Res.	OFFSET1[11:0]											
	Reset value	0	0	0	0	0	0															0	0	0	0	0	0	0	0	0	0	0	0
0x64	**ADC_OFR2**	OFFSET2_EN	OFFSET2_ CH[4:0]					Res.	Res.	Res.	Res.	Res.	Res.	Res.	Res.	Res.	Res.	Res.	Res.	Res.	Res.	OFFSET2[11:0]											
	Reset value	0	0	0	0	0	0															0	0	0	0	0	0	0	0	0	0	0	0
0x68	**ADC_OFR3**	OFFSET3_EN	OFFSET3_ CH[4:0]					Res.	Res.	Res.	Res.	Res.	Res.	Res.	Res.	Res.	Res.	Res.	Res.	Res.	Res.	OFFSET3[11:0]											
	Reset value	0	0	0	0	0	0															0	0	0	0	0	0	0	0	0	0	0	0
0x6C	**ADC_OFR4**	OFFSET4_EN	OFFSET4_ CH[4:0]					Res.	Res.	Res.	Res.	Res.	Res.	Res.	Res.	Res.	Res.	Res.	Res.	Res.	Res.	OFFSET4[11:0]											
	Reset value	0	0	0	0	0	0															0	0	0	0	0	0	0	0	0	0	0	0
0x70-0x7C	Reserved	Res.																															
0x80	**ADC_JDR1**	Res.	Res.	Res.	Res.	Res.	Res.	Res.	Res.	Res.	Res.	Res.	Res.	Res.	Res.	Res.	Res.	JDATA1[15:0]															
	Reset value																	0	0	0	0	0	0	0	0	0	0	0	0	0	0	0	0
0x84	**ADC_JDR2**	Res.	Res.	Res.	Res.	Res.	Res.	Res.	Res.	Res.	Res.	Res.	Res.	Res.	Res.	Res.	Res.	JDATA2[15:0]															
	Reset value																	0	0	0	0	0	0	0	0	0	0	0	0	0	0	0	0
0x88	**ADC_JDR3**	Res.	Res.	Res.	Res.	Res.	Res.	Res.	Res.	Res.	Res.	Res.	Res.	Res.	Res.	Res.	Res.	JDATA3[15:0]															
	Reset value																	0	0	0	0	0	0	0	0	0	0	0	0	0	0	0	0
0x8C	**ADC_JDR4**	Res.	Res.	Res.	Res.	Res.	Res.	Res.	Res.	Res.	Res.	Res.	Res.	Res.	Res.	Res.	Res.	JDATA4[15:0]															
	Reset value																	0	0	0	0	0	0	0	0	0	0	0	0	0	0	0	0
0x8C-0x9C	Reserved	Res.																															
0xA0	**ADC_AWD2CR**	Res.	Res.	Res.	Res.	Res.	Res.	Res.	Res.	Res.	Res.	Res.	Res.	Res.	AWD2CH[18:0]																		
	Reset value														0	0	0	0	0	0	0	0	0	0	0	0	0	0	0	0	0	0	0
0xA4	**ADC_AWD3CR**	Res.	Res.	Res.	Res.	Res.	Res.	Res.	Res.	Res.	Res.	Res.	Res.	Res.	AWD3CH[18:0]																		
	Reset value														0	0	0	0	0	0	0	0	0	0	0	0	0	0	0	0	0	0	0
0xA8-0xAC	Reserved	Res.	Res.	Res.	Res.	Res.	Res.	Res.	Res.	Res.	Res.	Res.	Res.	Res.	Res.	Res.	Res.	Res.	Res.	Res.	Res.	Res.	Res.	Res.	Res.	Res.	Res.	Res.	Res.	Res.	Res.	Res.	Res.

Table 120. ADC register map and reset values for each ADC (offset=0x000 for master ADC, 0x100 for slave ADC) (continued)

Offset	Register	31	30	29	28	27	26	25	24	23	22	21	20	19	18	17	16	15	14	13	12	11	10	9	8	7	6	5	4	3	2	1	0
0xB0	**ADC_DIFSEL**	Res.	Res.	Res.	Res.	Res.	Res.	Res.	Res.	Res.	Res.	Res.	Res.	Res.	DIFSEL[18:0]																		
	Reset value														0	0	0	0	0	0	0	0	0	0	0	0	0	0	0	0	0	0	0
0xB4	**ADC_CALFACT**	Res.	Res.	Res.	Res.	Res.	Res.	Res.	Res.	Res.	CALFACT_D[6:0]							Res.	Res.	Res.	Res.	Res.	Res.	Res.	Res.	Res.	CALFACT_S[6:0]						
	Reset value										0	0	0	0	0	0	0										0	0	0	0	0	0	0

Table 121. ADC register map and reset values (master and slave ADC common registers) offset = 0x300

Offset	Register	31	30	29	28	27	26	25	24	23	22	21	20	19	18	17	16	15	14	13	12	11	10	9	8	7	6	5	4	3	2	1	0
0x00	**ADC_CSR**	Res.	Res.	Res.	Res.	Res.	JQOVF_SLV	AWD3_SLV	AWD2_SLV	AWD1_SLV	JEOS_SLV	JEOC_SLV	OVR_SLV	EOS_SLV	EOC_SLV	EOSMP_SLV	ADRDY_SLV	Res.	Res.	Res.	Res.	Res.	JQOVF_MST	AWD3_MST	AWD2_MST	AWD1_MST	JEOS_MST	JEOC_MST	OVR_MST	EOS_MST	EOC_MST	EOSMP_MST	ADRDY_MST
							slave ADC2																master ADC1										
	Reset value						0	0	0	0	0	0	0	0	0	0	0						0	0	0	0	0	0	0	0	0	0	0
0x04	Reserved	Res.																															
0x08	**ADC_CCR**	Res.	Res.	Res.	Res.	Res.	Res.	Res.	CH18SEL	CH17SEL	VREFEN	PRESC[3:0]				CKMODE[1:0]		MDMA[1:0]		DMACFG	Res.	DELAY[3:0]					Res.	Res.	Res.	DUAL[4:0]			
	Reset value								0	0	0	0	0	0	0	0	0	0	0	0		0	0	0	0				0	0	0	0	0
0x0C	**ADC_CDR**	RDATA_SLV[15:0]																RDATA_MST[15:0]															
	Reset value	0	0	0	0	0	0	0	0	0	0	0	0	0	0	0	0	0	0	0	0	0	0	0	0	0	0	0	0	0	0	0	0

Refer to *Section 2.2 on page 75* for the register boundary addresses.

19 Digital-to-analog converter (DAC)

19.1 Introduction

The DAC module is a 12-bit, voltage output digital-to-analog converter. The DAC can be configured in 8- or 12-bit mode and may be used in conjunction with the DMA controller. In 12-bit mode, the data could be left- or right-aligned. The DAC features two output channels, each with its own converter. In dual DAC channel mode, conversions could be done independently or simultaneously when both channels are grouped together for synchronous update operations. An input reference pin, V_{REF+} (shared with others analog peripherals) is available for better resolution. An internal reference can also be set on the same input. Refer to *voltage reference buffer (VREFBUF)* section.

The DAC_OUTx pin can be used as general purpose input/output (GPIO) when the DAC output is disconnected from output pad and connected to on chip peripheral. The DAC output buffer can be optionally enabled to allow a high drive output current. An individual calibration can be applied on each DAC output channel. The DAC output channels support a low power mode, the Sample and hold mode.

19.2 DAC main features

The DAC main features are the following (see *Figure 137: Dual-channel DAC block diagram*)

- One DAC interface, maximum two output channels
- Left or right data alignment in 12-bit mode
- Synchronized update capability
- Noise-wave and Triangular-wave generation
- Dual DAC channel for independent or simultaneous conversions
- DMA capability for each channel including DMA underrun error detection
- External triggers for conversion
- DAC output channel buffered/unbuffered modes
- Buffer offset calibration
- Each DAC output can be disconnected from the DAC_OUTx output pin
- DAC output connection to on chip peripherals
- Sample and hold mode for low power operation in Stop mode
- Input voltage reference, V_{REF+}

Figure 137 shows the block diagram of a DAC channel and *Table 123* gives the pin description.

19.3 DAC implementation

Table 122. DAC implementation

DAC features	DAC1
Dual channel	X
Output buffer	X
I/O connection	DAC1_OUT1 on PA4, DAC1_OUT2 on PA5
Maximum sampling time	1MSPS
Autonomous mode	-

19.4 DAC functional description

19.4.1 DAC block diagram

Figure 137. Dual-channel DAC block diagram

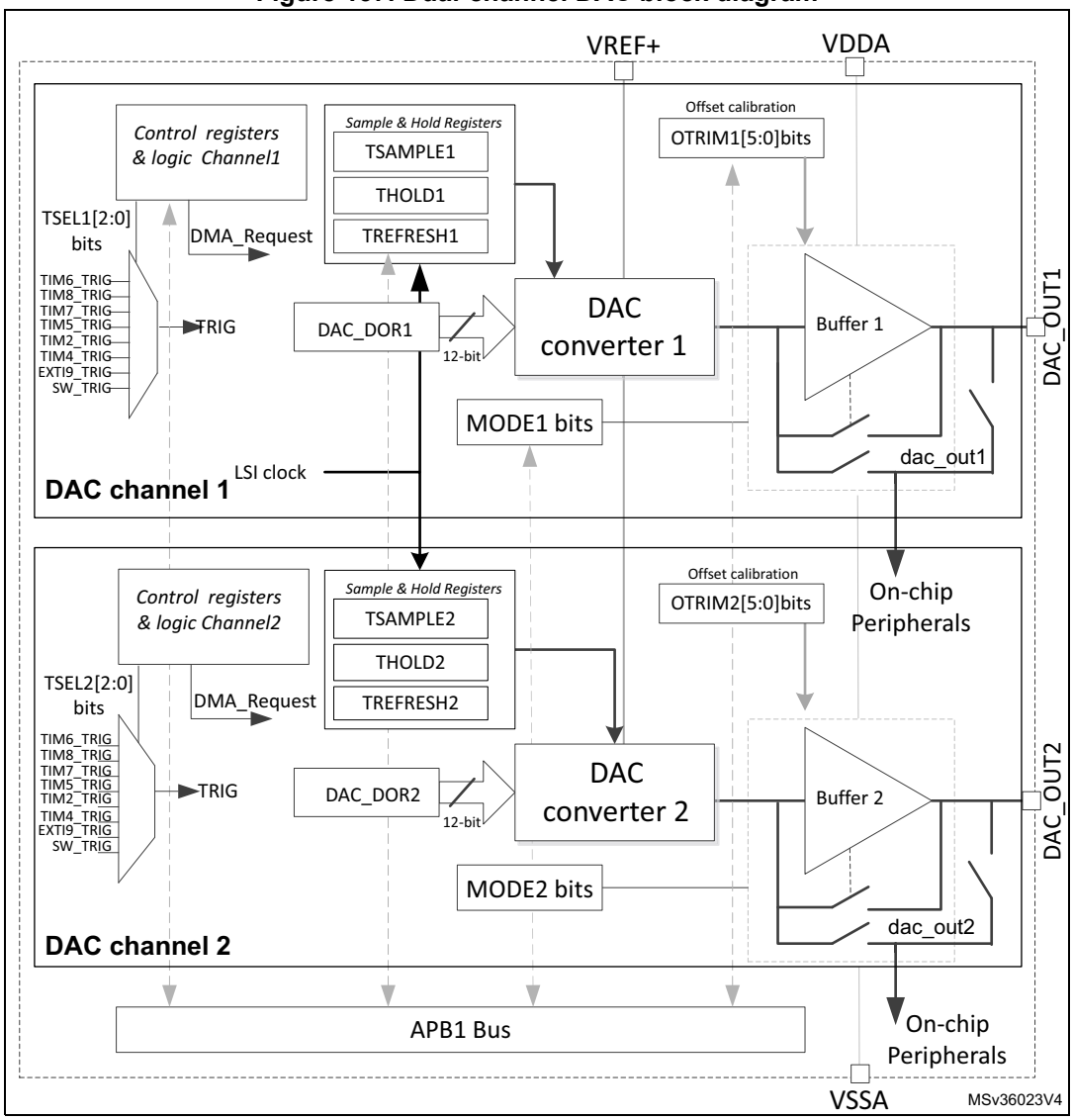

1. MODEx bits in the DAC_MCR control the output mode and allow switching between the Normal mode in buffer/unbuffered configuration and the Sample and hold mode.
2. Refer to *Section 19.3: DAC implementation* for channel2 availability.

The DAC includes:

- Up to two output channels
- The DAC_OUTx can be disconnected from the output pin and used as an ordinary GPIO
- The DAC_OUTx can use an internal pin connection to on-chip peripherals such as comparator, operational amplifier and ADC (if available).
- DAC output channel buffered or non buffered
- Sample and hold block and registers operational in Stop mode, using the LSI clock source for static conversion.

The DAC includes up to two separate output channels. Each output channel can be connected to on-chip peripherals such as comparator, operational amplifier and ADC (if available). In this case, the DAC output channel can be disconnected from the DAC_OUTx output pin and the corresponding GPIO can be used for another purpose.

The DAC output can be buffered or not. The Sample and hold block and its associated registers can run in Stop mode using the LSI clock source.

Table 123. DAC input/output pins

Pin name	Signal type	Remarks
VREF+	Input, analog reference positive	The higher/positive reference voltage for the DAC, $V_{REF+} \leq V_{DDAmax}$ (refer to datasheet)
VDDA	Input, analog supply	Analog power supply
VSSA	Input, analog supply ground	Ground for analog power supply
DAC_OUTx	Analog output signal	DAC channelx analog output

19.4.2 DAC channel enable

Each DAC channel can be powered on by setting its corresponding ENx bit in the DAC_CR register. The DAC channel is then enabled after a t_{WAKEUP} startup time.

Note: The ENx bit enables the analog DAC channelx only. The DAC channelx digital interface is enabled even if the ENx bit is reset.

19.4.3 DAC data format

Depending on the selected configuration mode, the data have to be written into the specified register as described below:

- Single DAC channel

  There are three possibilities:

  – 8-bit right alignment: the software has to load data into the DAC_DHR8Rx[7:0] bits (stored into the DHRx[11:4] bits)

  – 12-bit left alignment: the software has to load data into the DAC_DHR12Lx [15:4] bits (stored into the DHRx[11:0] bits)

  – 12-bit right alignment: the software has to load data into the DAC_DHR12Rx [11:0] bits (stored into the DHRx[11:0] bits)

Depending on the loaded DAC_DHRyyyx register, the data written by the user is shifted and stored into the corresponding DHRx (data holding registerx, which are internal non-memory-

mapped registers). The DHRx register is then loaded into the DORx register either automatically, by software trigger or by an external event trigger.

Figure 138. Data registers in single DAC channel mode

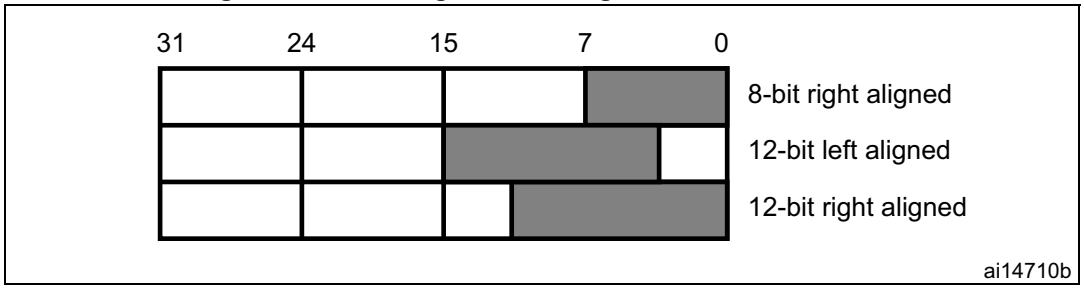

- Dual DAC channels (when available)

  There are three possibilities:
  - 8-bit right alignment: data for DAC channel1 to be loaded into the DAC_DHR8RD [7:0] bits (stored into the DHR1[11:4] bits) and data for DAC channel2 to be loaded into the DAC_DHR8RD [15:8] bits (stored into the DHR2[11:4] bits)
  - 12-bit left alignment: data for DAC channel1 to be loaded into the DAC_DHR12LD [15:4] bits (stored into the DHR1[11:0] bits) and data for DAC channel2 to be loaded into the DAC_DHR12LD [31:20] bits (stored into the DHR2[11:0] bits)
  - 12-bit right alignment: data for DAC channel1 to be loaded into the DAC_DHR12RD [11:0] bits (stored into the DHR1[11:0] bits) and data for DAC channel2 to be loaded into the DAC_DHR12RD [27:16] bits (stored into the DHR2[11:0] bits)

Depending on the loaded DAC_DHRyyyD register, the data written by the user is shifted and stored into DHR1 and DHR2 (data holding registers, which are internal non-memory-mapped registers). The DHR1 and DHR2 registers are then loaded into the DAC_DOR1 and DOR2 registers, respectively, either automatically, by software trigger or by an external event trigger.

Figure 139. Data registers in dual DAC channel mode

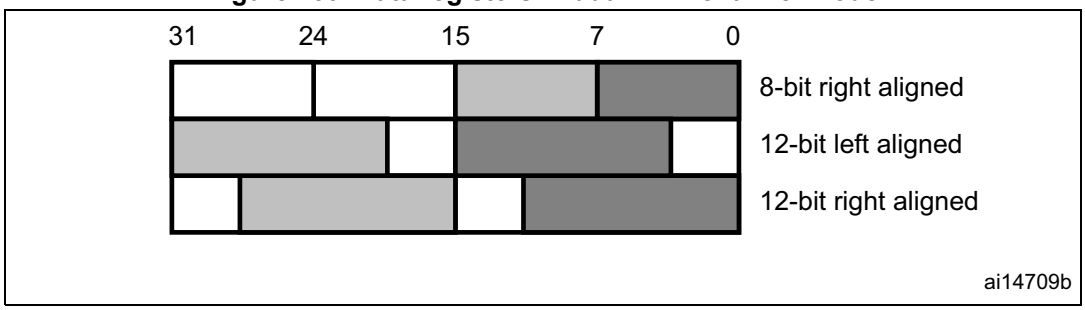

19.4.4 DAC conversion

The DAC_DORx cannot be written directly and any data transfer to the DAC channelx must be performed by loading the DAC_DHRx register (write operation to DAC_DHR8Rx, DAC_DHR12Lx, DAC_DHR12Rx, DAC_DHR8RD, DAC_DHR12RD or DAC_DHR12LD).

Data stored in the DAC_DHRx register are automatically transferred to the DAC_DORx register after one APB1 clock cycle, if no hardware trigger is selected (TENx bit in DAC_CR register is reset). However, when a hardware trigger is selected (TENx bit in DAC_CR register is set) and a trigger occurs, the transfer is performed three APB1 clock cycles after the trigger signal.

When DAC_DORx is loaded with the DAC_DHRx contents, the analog output voltage becomes available after a time $t_{SETTLING}$ that depends on the power supply voltage and the analog output load.

Figure 140. Timing diagram for conversion with trigger disabled TEN = 0

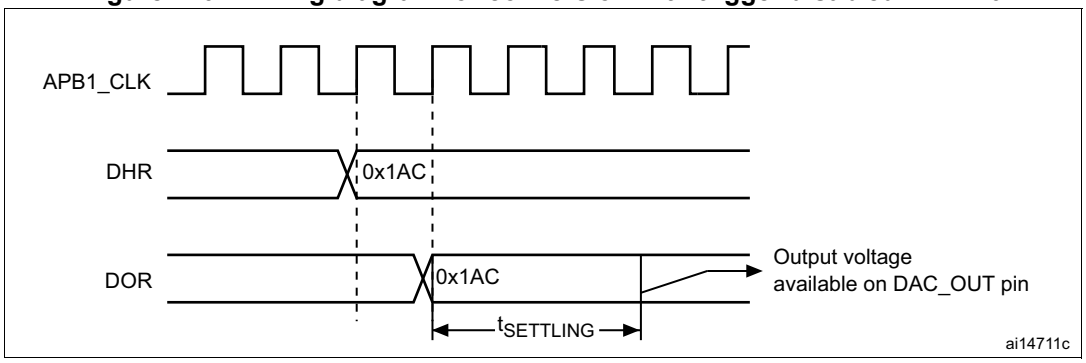

19.4.5 DAC output voltage

Digital inputs are converted to output voltages on a linear conversion between 0 and V_{REF+}.

The analog output voltages on each DAC channel pin are determined by the following equation:

$$\text{DACoutput} = V_{REF} \times \frac{DOR}{4096}$$

19.4.6 DAC trigger selection

If the TENx control bit is set, the conversion can then be triggered by an external event (timer counter, external interrupt line). The TSELx[2:0] control bits determine which out of 8 possible events triggers the conversion as shown in TSELx[2:0] bits of the DAC_CR register. These events can be either the software trigger or hardware triggers. Refer to *Table 124: DAC trigger selection*.

Each time a DAC interface detects a rising edge on the selected trigger source (refer to the table below), the last data stored into the DAC_DHRx register are transferred into the DAC_DORx register. The DAC_DORx register is updated three APB1 cycles after the trigger occurs.

If the software trigger is selected, the conversion starts once the SWTRIG bit is set. SWTRIG is reset by hardware once the DAC_DORx register has been loaded with the DAC_DHRx register contents.

Note: TSELx[2:0] bit cannot be changed when the ENx bit is set.

When software trigger is selected, the transfer from the DAC_DHRx register to the DAC_DORx register takes only one APB1 clock cycle.

Table 124. DAC trigger selection

Source	Type	TSELx[2:0]
TIM6_TRGO	Internal signal from on-chip timers	000
TIM8_TRGO	Internal signal from on-chip timers	001
TIM7_TRGO	Internal signal from on-chip timers	010
TIM5_TRGO	Internal signal from on-chip timers	011
TIM2_TRGO	Internal signal from on-chip timers	100
TIM4_TRGO	Internal signal from on-chip timers	101
EXTI9	External pin	110
SWTRIG	Software control bit	111

19.4.7 DMA requests

Each DAC channel has a DMA capability. Two DMA channels are used to service DAC channel DMA requests.

When an external trigger (but not a software trigger) occurs while the DMAENx bit is set, the value of the DAC_DHRx register is transferred into the DAC_DORx register when the transfer is complete, and a DMA request is generated.

In dual mode, if both DMAENx bits are set, two DMA requests are generated. If only one DMA request is needed, only the corresponding DMAENx bit must be set. In this way, the application can manage both DAC channels in dual mode by using one DMA request and a unique DMA channel.

As DAC_DHRx to DAC_DORx data transfer occurred before the DMA request, the very first data has to be written to the DAC_DHRx before the first trigger event occurs.

DMA underrun

The DAC DMA request is not queued so that if a second external trigger arrives before the acknowledgment for the first external trigger is received (first request), then no new request is issued and the DMA channelx underrun flag DMAUDRx in the DAC_SR register is set, reporting the error condition. The DAC channelx continues to convert old data.

The software must clear the DMAUDRx flag by writing 1, clear the DMAEN bit of the used DMA stream and re-initialize both DMA and DAC channelx to restart the transfer correctly. The software must modify the DAC trigger conversion frequency or lighten the DMA workload to avoid a new DMA underrun. Finally, the DAC conversion could be resumed by enabling both DMA data transfer and conversion trigger.

For each DAC channelx, an interrupt is also generated if its corresponding DMAUDRIEx bit in the DAC_CR register is enabled.

19.4.8 DAC noise generation

In order to generate a variable-amplitude pseudonoise, an LFSR (linear feedback shift register) is available. DAC noise generation is selected by setting WAVEx[1:0] to 01. The preloaded value in LFSR is 0xAAA. This register is updated three APB1 clock cycles after each trigger event, following a specific calculation algorithm.

Figure 141. DAC LFSR register calculation algorithm

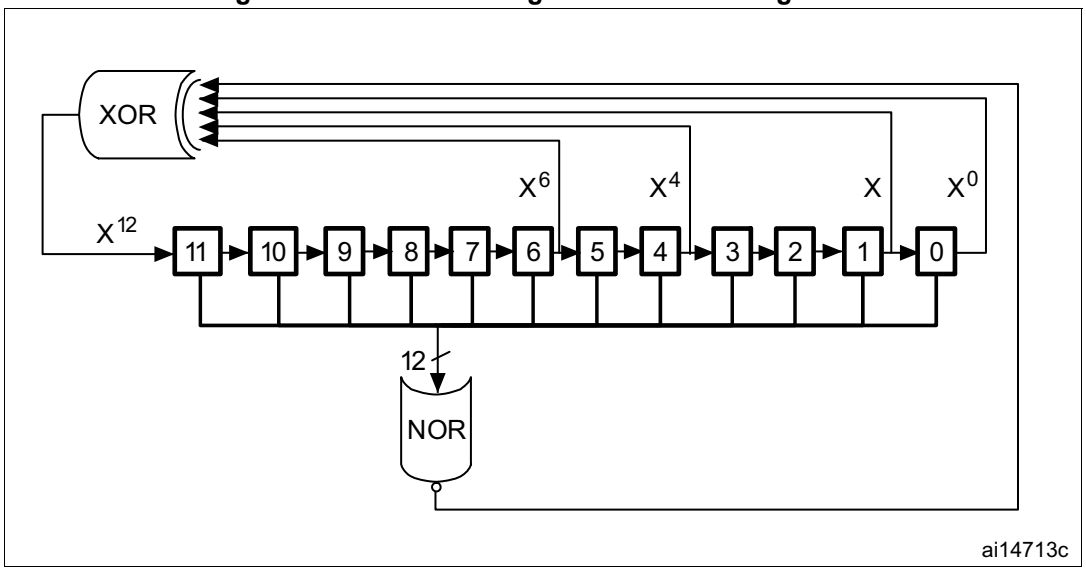

The LFSR value, that may be masked partially or totally by means of the MAMPx[3:0] bits in the DAC_CR register, is added up to the DAC_DHRx contents without overflow and this value is then transferred into the DAC_DORx register.

If LFSR is 0x0000, a ‘1 is injected into it (antilock-up mechanism).

It is possible to reset LFSR wave generation by resetting the WAVEx[1:0] bits.

Figure 142. DAC conversion (SW trigger enabled) with LFSR wave generation

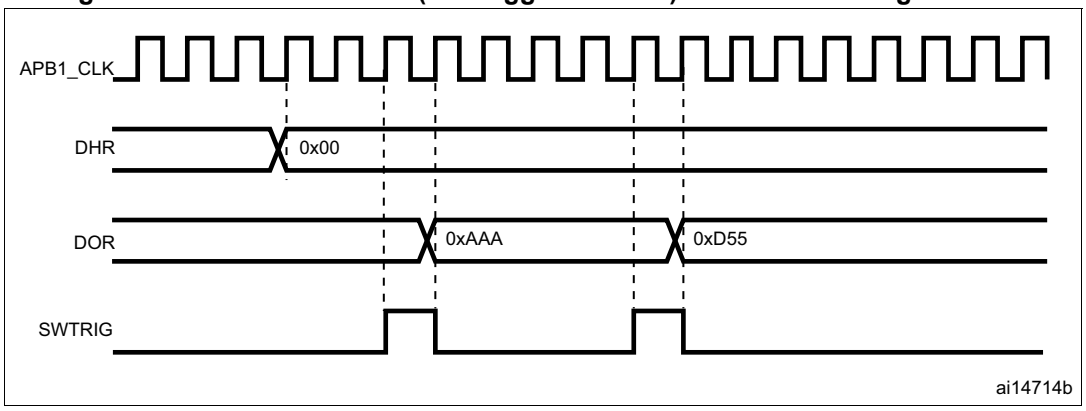

Note: The DAC trigger must be enabled for noise generation by setting the TENx bit in the DAC_CR register.

19.4.9 DAC triangle-wave generation

It is possible to add a small-amplitude triangular waveform on a DC or slowly varying signal. DAC triangle-wave generation is selected by setting WAVEx[1:0] to 10”. The amplitude is configured through the MAMPx[3:0] bits in the DAC_CR register. An internal triangle counter is incremented three APB1 clock cycles after each trigger event. The value of this counter is then added to the DAC_DHRx register without overflow and the sum is transferred into the DAC_DORx register. The triangle counter is incremented as long as it is less than the maximum amplitude defined by the MAMPx[3:0] bits. Once the configured amplitude is reached, the counter is decremented down to 0, then incremented again and so on.

It is possible to reset triangle wave generation by resetting the WAVEx[1:0] bits.

Figure 143. DAC triangle wave generation

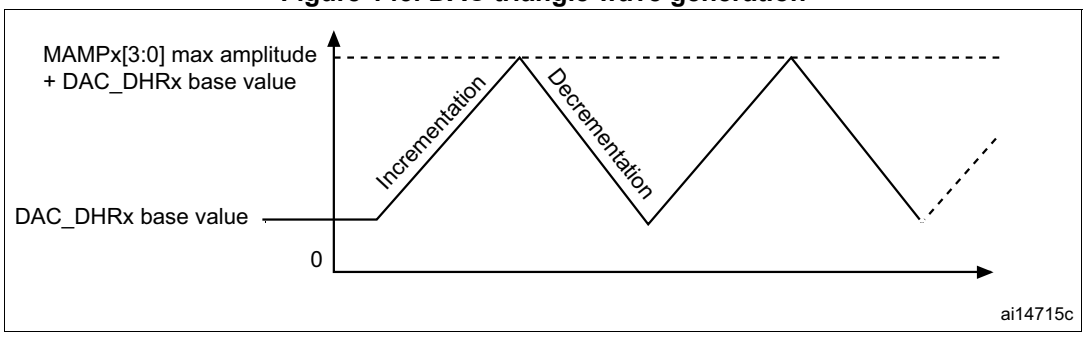

Figure 144. DAC conversion (SW trigger enabled) with triangle wave generation

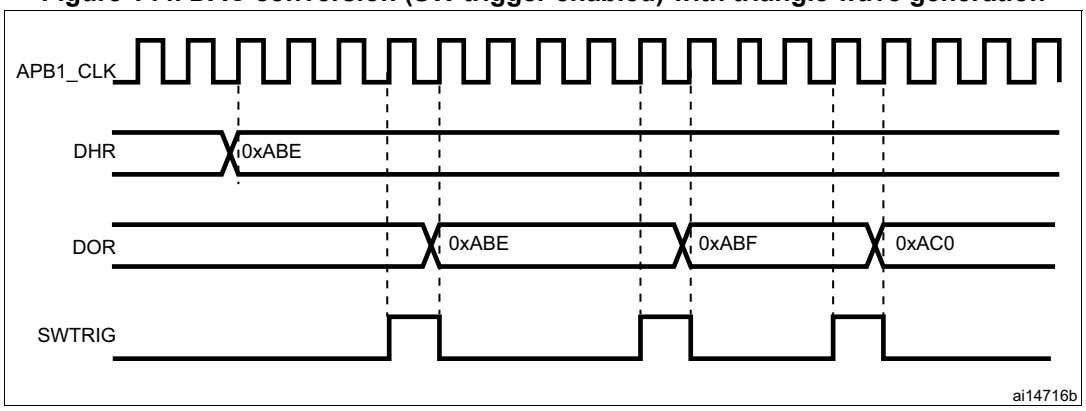

Note: The DAC trigger must be enabled for triangle wave generation by setting the TENx bit in the DAC_CR register.

The MAMPx[3:0] bits must be configured before enabling the DAC, otherwise they cannot be changed.

19.4.10 DAC channel modes

Each DAC channel can be configured in Normal mode or Sample and hold mode. The output buffer can be enabled to allow a high drive capability. Before enabling output buffer, the voltage offset needs to be calibrated. This calibration is performed at the factory (loaded after reset) and can be adjusted by software during application operation.

Normal mode

In Normal mode, there are four combinations, by changing the buffer state and by changing the DAC_OUTx pin interconnections.

To enable the output buffer, the MODEx[2:0] bits in DAC_MCR register must be:

- 000: DAC is connected to the external pin
- 001: DAC is connected to external pin and to on-chip peripherals

To disable the output buffer, the MODEx[2:0] bits in DAC_MCR register must be:

- 010: DAC is connected to the external pin
- 011: DAC is connected to on-chip peripherals

Sample and hold mode

In Sample and hold mode, the DAC core converts data on a triggered conversion, and then holds the converted voltage on a capacitor. When not converting, the DAC cores and buffer are completely turned off between samples and the DAC output is tri-stated, therefore reducing the overall power consumption. A stabilization period, which value depends on the buffer state, is required before each new conversion.

In this mode, the DAC core and all corresponding logic and registers are driven by the LSI low-speed clock in addition to the APB1 clock, allowing to use the DAC channels in deep low power modes such as Stop mode.

The LSI low-speed clock must not be stopped on-the-fly when the Sample and hold mode is enabled.

The sample/hold mode operations can be divided into 3 phases:

1. Sample phase: the sample/hold element is charged to the desired voltage. The charging time depends on capacitor value (internal or external, selected by the user). The sampling time is configured with the TSAMPLEx[9:0] bits in DAC_SHSRx register. During the write of the TSAMPLEx[9:0] bits, the BWSTx bit in DAC_SR register is set to 1 to synchronize between both clocks domains (APB and low speed clock) and allowing the software to change the value of sample phase during the DAC channel operation
2. Hold phase: the DAC output channel is tri-stated, the DAC core and the buffer are turned off, to reduce the current consumption. The hold time is configured with the THOLDx[9:0] bits in DAC_SHHR register
3. Refresh phase: the refresh time is configured with the TREFRESHx[7:0] bits in DAC_SHRR register

The timings for the three phases above are in units of LSI clock periods. As an example, to configure a sample time of 350 µs, a hold time of 2 ms and a refresh time of 100 µs assuming LSI ~32 KHz is selected:

12 cycles are required for sample phase: TSAMPLEx[9:0] = 11,

62 cycles are required for hold phase: THOLDx[9:0] = 62,

and 4 cycles are required for refresh period: TREFRESHx[7:0] = 4.

In this example, the power consumption is reduced by almost a factor of 15 versus Normal modes.

The formulas to compute the right sample and refresh timings are described in the table below, the Hold time depends on the leakage current.

Table 125. Sample and refresh timings

Buffer State	t_{SAMP}(1)(2)	$t_{REFRESH}$(2)(3)
Enable	7 µs + (10*R_{BON}*C_{SH})	7 µs + (R_{BON}*C_{SH})*ln(2*N_{LSB})
Disable	3 µs + (10*R_{BOFF}*C_{SH})	3 µs + (R_{BOFF}*C_{SH})*ln(2*N_{LSB})

1. In the above formula the settling to the desired code value with ½ LSB or accuracy requires 10 constant time for 12 bits resolution. For 8 bits resolution, the settling time is 7 constant time.
2. C_{SH} is the capacitor in Sample and hold mode.
3. The tolerated voltage drop during the hold phase “Vd” is represented by the number of LSBs after the capacitor discharging with the output leakage current. The settling back to the desired value with ½ LSB error accuracy requires ln(2*Nlsb) constant time of the DAC.

Example of the sample and refresh time calculation with output buffer on

The values used in the example below are provided as indication only. Please refer to the product datasheet for product data.

C_{SH} = 100 nF

V_{DDA}= 3.0 V

Sampling phase:

t_{SAMP} = 7 µs + (10 * 2000 * 100 * 10^{-9}) = 2.007 ms

(where R_{BON} = 2 kΩ)

Refresh phase:

$t_{REFRESH}$ = 7 µs + (2000 * 100 * 10^{-9}) * ln(2*10) = 606.1 µs

(where N_{LSB} = 10 (10 LSB drop during the hold phase)

Hold phase:

D_v = i_{leak} * t_{hold} / C_{SH} = 0.0073 V (10 LSB of 12bit at 3 V)

i_{leak} = 150 nA (worst case on the IO leakage on all the temperature range)

t_{hold} = 0.0073 * 100 * 10^{-9} / (150 * 10^{-9}) = 4.867 ms

Figure 145. DAC Sample and hold mode phase diagram

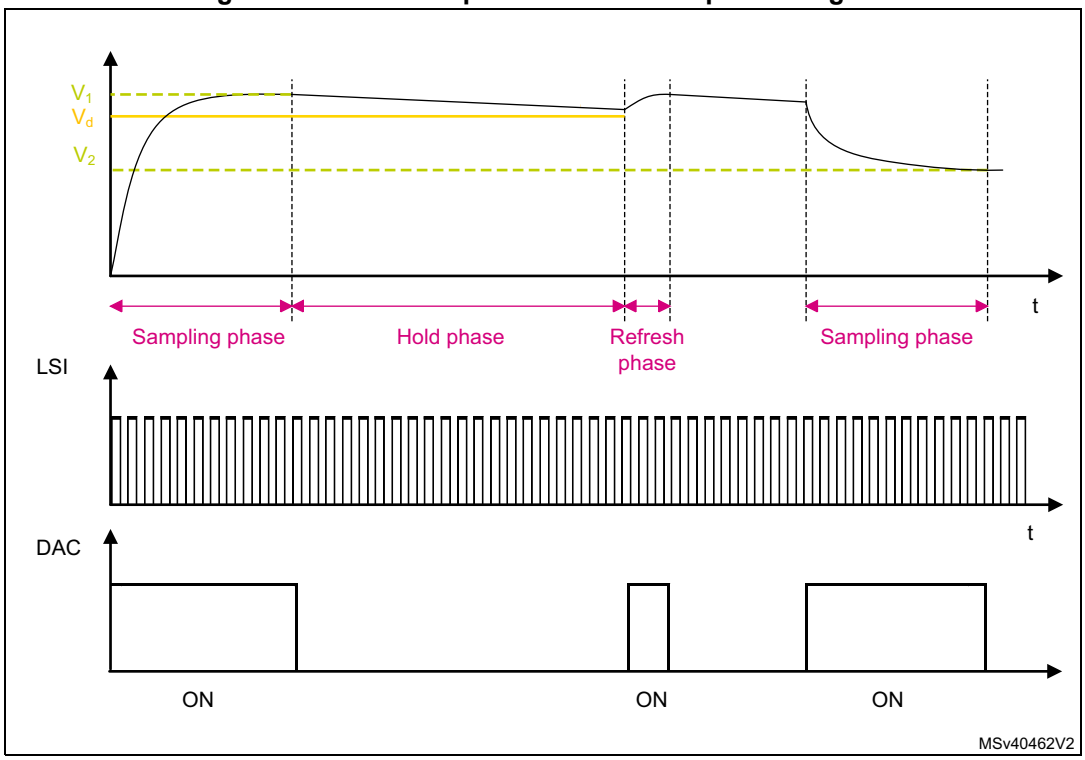

Like in Normal mode, the Sample and hold mode has different configurations.

To enable the output buffer, MODEx[2:0] bits in DAC_MCR register must be set to:

- 100: DAC is connected to the external pin
- 101: DAC is connected to external pin and to on chip peripherals

To disabled the output buffer, MODEx[2:0] bits in DAC_MCR register must be set to:

- 110: DAC is connected to external pin and to on chip peripherals
- 111: DAC is connected to on chip peripherals

  When MODEx[2:0] bits are equal to 111, an internal capacitor, C_{Lint}, holds the voltage output of the DAC core and then drive it to on-chip peripherals.

All Sample and hold phases are interruptible, and any change in DAC_DHRx immediately triggers a new sample phase.

Table 126. Channel output modes summary

MODEx[2:0]			Mode	Buffer	Output connections
0	0	0	Normal mode	Enabled	Connected to external pin
0	0	1			Connected to external pin and to on chip-peripherals (such as comparators)
0	1	0		Disabled	Connected to external pin
0	1	1			Connected to on chip peripherals (such as comparators)

Table 126. Channel output modes summary (continued)

MODEx[2:0]			Mode	Buffer	Output connections
1	0	0	Sample and hold mode	Enabled	Connected to external pin
1	0	1			Connected to external pin and to on chip peripherals (such as comparators)
1	1	0		Disabled	Connected to external pin and to on chip peripherals (such as comparators)
1	1	1			Connected to on chip peripherals (such as comparators)

19.4.11 DAC channel buffer calibration

The transfer function for an N-bit digital-to-analog converter (DAC) is:

$$V_{out} = ((D/2^{N-1}) \times G \times V_{ref}) + V_{OS}$$

Where V_{OUT} is the analog output, D is the digital input, G is the gain, V_{ref} is the nominal full-scale voltage, and V_{os} is the offset voltage. For an ideal DAC channel, G = 1 and V_{os} = 0.

Due to output buffer characteristics, the voltage offset may differ from part-to-part and introduce an absolute offset error on the analog output. To compensate the V_{os}, a calibration is required by a trimming technique.

The calibration is only valid when the DAC channelx is operating with buffer enabled (MODEx[2:0] = 000b or 001b or 100b or 101b). if applied in other modes when the buffer is off, it has no effect. During the calibration:

- The buffer output is disconnected from the pin internal/external connections and put in tristate mode (HiZ).
- The buffer acts as a comparator to sense the middle-code value 0x800 and compare it to VREF+/2 signal through an internal bridge, then toggle its output signal to 0 or 1 depending on the comparison result (CAL_FLAGx bit).

Two calibration techniques are provided:

- Factory trimming (default setting)

  The DAC buffer offset is factory trimmed. The default value of OTRIMx[4:0] bits in DAC_CCR register is the factory trimming value and it is loaded once DAC digital interface is reset.
- User trimming

  The user trimming can be done when the operating conditions differs from nominal factory trimming conditions and in particular when V_{DDA} voltage, temperature, VREF+ values change and can be done at any point during application by software.

Note: Refer to the datasheet for more details of the Nominal factory trimming conditions

In addition, when V_{DD} is removed (example the device enters in STANDBY or VBAT modes) the calibration is required.

The steps to perform a user trimming calibration are as below:

1. If the DAC channel is active, write 0 to ENx bit in DAC_CR to disable the channel.
2. Select a mode where the buffer is enabled, by writing to DAC_MCR register, MODEx[2:0] = 000b or 001b or 100b or 101b.
3. Start the DAC channelx calibration, by setting the CENx bit in DAC_CR register to 1.
4. Apply a trimming algorithm:
   a) Write a code into OTRIMx[4:0] bits, starting by 00000b.
   b) Wait for t_{TRIM} delay.
   c) Check if CAL_FLAGx bit in DAC_SR is set to 1.
   d) If CAL_FLAGx is set to 1, the OTRIMx[4:0] trimming code is found and can be used during *device* operation to compensate the output value, else increment OTRIMx[4:0] and repeat sub-steps from (a) to (d) again.

The software algorithm may use either a successive approximation or dichotomy techniques to compute and set the content of OTRIMx[4:0] bits in a faster way.

The commutation/toggle of CAL_FLAGx bit indicates that the offset is correctly compensated and the corresponding trim code must be kept in the OTRIMx[4:0] bits in DAC_CCR register.

Note: A t_{TRIM} delay must be respected between the write to the OTRIMx[4:0] bits and the read of the CAL_FLAGx bit in DAC_SR register in order to get a correct value.This parameter is specified into datasheet electrical characteristics section.

If V_{DDA}, VREF+ and temperature conditions do not change during device operation while it enters more often in standby and VBAT mode, the software may store the OTRIMx[4:0] bits found in the first user calibration in the flash or in back-up registers. then to load/write them directly when the device power is back again thus avoiding to wait for a new calibration time.

When CENx bit is set, it is not allowed to set ENx bit.

19.4.12 Dual DAC channel conversion modes (if dual channels are available)

To efficiently use the bus bandwidth in applications that require the two DAC channels at the same time, three dual registers are implemented: DHR8RD, DHR12RD and DHR12LD. A unique register access is then required to drive both DAC channels at the same time. For the wave generation, no accesses to DHRxxxD registers are required. As a result, two output channels can be used either independently or simultaneously.

11 conversion modes are possible using the two DAC channels and these dual registers. All the conversion modes can nevertheless be obtained using separate DHRx registers if needed.

All modes are described in the paragraphs below.

Independent trigger without wave generation

To configure the DAC in this conversion mode, the following sequence is required:

1. Set the two DAC channel trigger enable bits TEN1 and TEN2.
2. Configure different trigger sources by setting different values in the TSEL1 and TSEL2 bitfields.
3. Load the dual DAC channel data into the desired DHR register (DAC_DHR12RD, DAC_DHR12LD or DAC_DHR8RD).

When a DAC channel1 trigger arrives, the DHR1 register is transferred into DAC_DOR1 (three APB1 clock cycles later).

When a DAC channel2 trigger arrives, the DHR2 register is transferred into DAC_DOR2 (three APB1 clock cycles later).

Independent trigger with single LFSR generation

To configure the DAC in this conversion mode, the following sequence is required:

1. Set the two DAC channel trigger enable bits TEN1 and TEN2.
2. Configure different trigger sources by setting different values in the TSEL1 and TSEL2 bitfields.
3. Configure the two DAC channel WAVEx[1:0] bits as 01 and the same LFSR mask value in the MAMPx[3:0] bits.
4. Load the dual DAC channel data into the desired DHR register (DAC_DHR12RD, DAC_DHR12LD or DAC_DHR8RD).

When a DAC channel1 trigger arrives, the LFSR1 counter, with the same mask, is added to the DHR1 register and the sum is transferred into DAC_DOR1 (three APB1 clock cycles later). Then the LFSR1 counter is updated.

When a DAC channel2 trigger arrives, the LFSR2 counter, with the same mask, is added to the DHR2 register and the sum is transferred into DAC_DOR2 (three APB1 clock cycles later). Then the LFSR2 counter is updated.

Independent trigger with different LFSR generation

To configure the DAC in this conversion mode, the following sequence is required:

1. Set the two DAC channel trigger enable bits TEN1 and TEN2.
2. Configure different trigger sources by setting different values in the TSEL1 and TSEL2 bitfields.
3. Configure the two DAC channel WAVEx[1:0] bits as 01 and set different LFSR masks values in the MAMP1[3:0] and MAMP2[3:0] bits.
4. Load the dual DAC channel data into the desired DHR register (DAC_DHR12RD, DAC_DHR12LD or DAC_DHR8RD).

When a DAC channel1 trigger arrives, the LFSR1 counter, with the mask configured by MAMP1[3:0], is added to the DHR1 register and the sum is transferred into DAC_DOR1 (three APB1 clock cycles later). Then the LFSR1 counter is updated.

When a DAC channel2 trigger arrives, the LFSR2 counter, with the mask configured by MAMP2[3:0], is added to the DHR2 register and the sum is transferred into DAC_DOR2 (three APB1 clock cycles later). Then the LFSR2 counter is updated.

Independent trigger with single triangle generation

To configure the DAC in this conversion mode, the following sequence is required:

1. Set the two DAC channel trigger enable bits TEN1 and TEN2.
2. Configure different trigger sources by setting different values in the TSEL1 and TSEL2 bitfields.
3. Configure the two DAC channel WAVEx[1:0] bits as 1x and the same maximum amplitude value in the MAMPx[3:0] bits.
4. Load the dual DAC channel data into the desired DHR register (DAC_DHR12RD, DAC_DHR12LD or DAC_DHR8RD).

When a DAC channel1 trigger arrives, the DAC channel1 triangle counter, with the same triangle amplitude, is added to the DHR1 register and the sum is transferred into DAC_DOR1 (three APB1 clock cycles later). The DAC channel1 triangle counter is then updated.

When a DAC channel2 trigger arrives, the DAC channel2 triangle counter, with the same triangle amplitude, is added to the DHR2 register and the sum is transferred into DAC_DOR2 (three APB1 clock cycles later). The DAC channel2 triangle counter is then updated.

Independent trigger with different triangle generation

To configure the DAC in this conversion mode, the following sequence is required:

1. Set the two DAC channel trigger enable bits TEN1 and TEN2.
2. Configure different trigger sources by setting different values in the TSEL1 and TSEL2 bits.
3. Configure the two DAC channel WAVEx[1:0] bits as 1x and set different maximum amplitude values in the MAMP1[3:0] and MAMP2[3:0] bits.
4. Load the dual DAC channel data into the desired DHR register (DAC_DHR12RD, DAC_DHR12LD or DAC_DHR8RD).

When a DAC channel1 trigger arrives, the DAC channel1 triangle counter, with a triangle amplitude configured by MAMP1[3:0], is added to the DHR1 register and the sum is transferred into DAC_DOR1 (three APB1 clock cycles later). The DAC channel1 triangle counter is then updated.

When a DAC channel2 trigger arrives, the DAC channel2 triangle counter, with a triangle amplitude configured by MAMP2[3:0], is added to the DHR2 register and the sum is transferred into DAC_DOR2 (three APB1 clock cycles later). The DAC channel2 triangle counter is then updated.

Simultaneous software start

To configure the DAC in this conversion mode, the following sequence is required:

- Load the dual DAC channel data to the desired DHR register (DAC_DHR12RD, DAC_DHR12LD or DAC_DHR8RD).

In this configuration, one APB1 clock cycle later, the DHR1 and DHR2 registers are transferred into DAC_DOR1 and DAC_DOR2, respectively.

Simultaneous trigger without wave generation

To configure the DAC in this conversion mode, the following sequence is required:

1. Set the two DAC channel trigger enable bits TEN1 and TEN2.
2. Configure the same trigger source for both DAC channels by setting the same value in the TSEL1 and TSEL2 bitfields.
3. Load the dual DAC channel data to the desired DHR register (DAC_DHR12RD, DAC_DHR12LD or DAC_DHR8RD).

When a trigger arrives, the DHR1 and DHR2 registers are transferred into DAC_DOR1 and DAC_DOR2, respectively (after three APB1 clock cycles).

Simultaneous trigger with single LFSR generation

1. To configure the DAC in this conversion mode, the following sequence is required:
2. Set the two DAC channel trigger enable bits TEN1 and TEN2.
3. Configure the same trigger source for both DAC channels by setting the same value in the TSEL1 and TSEL2 bitfields.
4. Configure the two DAC channel WAVEx[1:0] bits as 01 and the same LFSR mask value in the MAMPx[3:0] bits.
5. Load the dual DAC channel data to the desired DHR register (DHR12RD, DHR12LD or DHR8RD).

When a trigger arrives, the LFSR1 counter, with the same mask, is added to the DHR1 register and the sum is transferred into DAC_DOR1 (three APB1 clock cycles later). The LFSR1 counter is then updated. At the same time, the LFSR2 counter, with the same mask, is added to the DHR2 register and the sum is transferred into DAC_DOR2 (three APB1 clock cycles later). The LFSR2 counter is then updated.

Simultaneous trigger with different LFSR generation

To configure the DAC in this conversion mode, the following sequence is required:

1. Set the two DAC channel trigger enable bits TEN1 and TEN2
2. Configure the same trigger source for both DAC channels by setting the same value in the TSEL1 and TSEL2 bitfields.
3. Configure the two DAC channel WAVEx[1:0] bits as 01 and set different LFSR mask values using the MAMP1[3:0] and MAMP2[3:0] bits.
4. Load the dual DAC channel data into the desired DHR register (DAC_DHR12RD, DAC_DHR12LD or DAC_DHR8RD).

When a trigger arrives, the LFSR1 counter, with the mask configured by MAMP1[3:0], is added to the DHR1 register and the sum is transferred into DAC_DOR1 (three APB1 clock cycles later). The LFSR1 counter is then updated.
At the same time, the LFSR2 counter, with the mask configured by MAMP2[3:0], is added to the DHR2 register and the sum is transferred into DAC_DOR2 (three APB1 clock cycles later). The LFSR2 counter is then updated.

Simultaneous trigger with single triangle generation

To configure the DAC in this conversion mode, the following sequence is required:

1. Set the two DAC channel trigger enable bits TEN1 and TEN2
2. Configure the same trigger source for both DAC channels by setting the same value in the TSEL1 and TSEL2 bitfields.
3. Configure the two DAC channel WAVEx[1:0] bits as 1x and the same maximum amplitude value using the MAMPx[3:0] bits.
4. Load the dual DAC channel data into the desired DHR register (DAC_DHR12RD, DAC_DHR12LD or DAC_DHR8RD).

When a trigger arrives, the DAC channel1 triangle counter, with the same triangle amplitude, is added to the DHR1 register and the sum is transferred into DAC_DOR1 (three APB1 clock cycles later). The DAC channel1 triangle counter is then updated.

At the same time, the DAC channel2 triangle counter, with the same triangle amplitude, is added to the DHR2 register and the sum is transferred into DAC_DOR2 (three APB1 clock cycles later). The DAC channel2 triangle counter is then updated.

Simultaneous trigger with different triangle generation

To configure the DAC in this conversion mode, the following sequence is required:

1. Set the two DAC channel trigger enable bits TEN1 and TEN2
2. Configure the same trigger source for both DAC channels by setting the same value in the TSEL1 and TSEL2 bitfields.
3. Configure the two DAC channel WAVEx[1:0] bits as 1x and set different maximum amplitude values in the MAMP1[3:0] and MAMP2[3:0] bits.
4. Load the dual DAC channel data into the desired DHR register (DAC_DHR12RD, DAC_DHR12LD or DAC_DHR8RD).

When a trigger arrives, the DAC channel1 triangle counter, with a triangle amplitude configured by MAMP1[3:0], is added to the DHR1 register and the sum is transferred into DAC_DOR1 (three APB clock cycles later). Then the DAC channel1 triangle counter is updated.

At the same time, the DAC channel2 triangle counter, with a triangle amplitude configured by MAMP2[3:0], is added to the DHR2 register and the sum is transferred into DAC_DOR2 (three APB1 clock cycles later). Then the DAC channel2 triangle counter is updated.

19.5 DAC low-power modes

Table 127. Effect of low-power modes on DAC

Mode	Description
Sleep	No effect, DAC used with DMA
Low-power run	No effect.
Low-power sleep	No effect. DAC used with DMA.
Stop 0 / Stop 1	DAC remains active with a static value, if Sample and hold mode is selected using LSI clock
Stop 2	The DAC registers content is kept. The DAC must be disabled before entering Stop 2.

Table 127. Effect of low-power modes on DAC (continued)

Mode	Description
Standby	The DAC peripheral is powered down and must be reinitialized after exiting Standby or Shutdown mode.
Shutdown	

19.6 DAC interrupts

Table 128. DAC interrupts

Interrupt acronym	Interrupt event	Event flag	Enable control bit	Interrupt clear method	Exit Sleep mode	Exit Stop mode	Exit Standby mode
DAC	DMA underrun	DMAUDRx	DMAUDRIEx	Write DMAUDRx = 1	Yes	No	No

19.7 DAC registers

Refer to *Section 1 on page 69* for a list of abbreviations used in register descriptions.

The peripheral registers have to be accessed by words (32-bit).

19.7.1 DAC control register (DAC_CR)

Address offset: 0x00

Reset value: 0x0000 0000

31	30	29	28	27	26	25	24	23	22	21	20	19	18	17	16
Res.	CEN2	DMAUDRIE2	DMAEN2	MAMP2[3:0]				WAVE2[1:0]		TSEL2[2]	TSEL2[1]	TSEL2[0]	TEN2	Res.	EN2
	rw	rw	rw	rw	rw	rw	rw	rw	rw	rw	rw	rw	rw		rw
15	14	13	12	11	10	9	8	7	6	5	4	3	2	1	0
Res.	CEN1	DMAUDRIE1	DMAEN1	MAMP1[3:0]				WAVE1[1:0]		TSEL1[2]	TSEL1[1]	TSEL1[0]	TEN1	Res.	EN1
	rw	rw	rw	rw	rw	rw	rw	rw	rw	rw	rw	rw	rw		rw

Bit 31 Reserved, must be kept at reset value.

Bit 30 **CEN2**: DAC channel2 calibration enable

This bit is set and cleared by software to enable/disable DAC channel2 calibration, it can be written only if EN2 bit is set to 0 into DAC_CR (the calibration mode can be entered/exit only when the DAC channel is disabled) Otherwise, the write operation is ignored.

0: DAC channel2 in Normal operating mode

1: DAC channel2 in calibration mode

Note: This bit is available only on dual-channel DACs. Refer to Section 19.3: DAC implementation.

Bit 29 **DMAUDRIE2**: DAC channel2 DMA underrun interrupt enable

This bit is set and cleared by software.

0: DAC channel2 DMA underrun interrupt disabled

1: DAC channel2 DMA underrun interrupt enabled

Note: This bit is available only on dual-channel DACs. Refer to Section 19.3: DAC implementation.

Bit 28 **DMAEN2**: DAC channel2 DMA enable

This bit is set and cleared by software.

0: DAC channel2 DMA mode disabled

1: DAC channel2 DMA mode enabled

Note: This bit is available only on dual-channel DACs. Refer to Section 19.3: DAC implementation.

Bits 27:24 **MAMP2[3:0]**: DAC channel2 mask/amplitude selector

These bits are written by software to select mask in wave generation mode or amplitude in triangle generation mode.

0000: Unmask bit0 of LFSR/ triangle amplitude equal to 1
0001: Unmask bits[1:0] of LFSR/ triangle amplitude equal to 3
0010: Unmask bits[2:0] of LFSR/ triangle amplitude equal to 7
0011: Unmask bits[3:0] of LFSR/ triangle amplitude equal to 15
0100: Unmask bits[4:0] of LFSR/ triangle amplitude equal to 31
0101: Unmask bits[5:0] of LFSR/ triangle amplitude equal to 63
0110: Unmask bits[6:0] of LFSR/ triangle amplitude equal to 127
0111: Unmask bits[7:0] of LFSR/ triangle amplitude equal to 255
1000: Unmask bits[8:0] of LFSR/ triangle amplitude equal to 511
1001: Unmask bits[9:0] of LFSR/ triangle amplitude equal to 1023
1010: Unmask bits[10:0] of LFSR/ triangle amplitude equal to 2047
≥ 1011: Unmask bits[11:0] of LFSR/ triangle amplitude equal to 4095

Note: These bits are available only on dual-channel DACs. Refer to Section 19.3: DAC implementation.

Bits 23:22 **WAVE2[1:0]**: DAC channel2 noise/triangle wave generation enable

These bits are set/reset by software.

00: wave generation disabled
01: Noise wave generation enabled
1x: Triangle wave generation enabled

Note: Only used if bit TEN2 = 1 (DAC channel2 trigger enabled)
These bits are available only on dual-channel DACs. Refer to Section 19.3: DAC implementation.

Bits 21:19 **TSEL2[2:0]**: DAC channel2 trigger selection

These bits select the external event used to trigger DAC channel2

Refer to the trigger selection tables in *Section 19.4.6: DAC trigger selection* for details on trigger configuration and mapping.

Note: Only used if bit TEN2 = 1 (DAC channel2 trigger enabled).
These bits are available only on dual-channel DACs. Refer to Section 19.3: DAC implementation.

Bit 18 **TEN2**: DAC channel2 trigger enable

This bit is set and cleared by software to enable/disable DAC channel2 trigger

0: DAC channel2 trigger disabled and data written into the DAC_DHR2 register are transferred one APB1 clock cycle later to the DAC_DOR2 register
1: DAC channel2 trigger enabled and data from the DAC_DHR2 register are transferred three APB1 clock cycles later to the DAC_DOR2 register

*Note: When software trigger is selected, the transfer from the DAC_DHR2 reg*ister to the DAC_DOR2 register takes only one APB1 clock cycle.*
These bits are available only on dual-channel DACs. Refer to Section 19.3: DAC implementation.

Bit 17 Reserved, must be kept at reset value.

Bit 16 **EN2**: DAC channel2 enable

This bit is set and cleared by software to enable/disable DAC channel2.

0: DAC channel2 disabled
1: DAC channel2 enabled

Note: These bits are available only on dual-channel DACs. Refer to Section 19.3: DAC implementation.

Bit 15 Reserved, must be kept at reset value.

Bit 14 **CEN1**: DAC channel1 calibration enable

This bit is set and cleared by software to enable/disable DAC channel1 calibration, it can be written only if bit EN1=0 into DAC_CR (the calibration mode can be entered/exit only when the DAC channel is disabled) Otherwise, the write operation is ignored.

0: DAC channel1 in Normal operating mode

1: DAC channel1 in calibration mode

Bit 13 **DMAUDRIE1**: DAC channel1 DMA Underrun Interrupt enable

This bit is set and cleared by software.

0: DAC channel1 DMA Underrun Interrupt disabled

1: DAC channel1 DMA Underrun Interrupt enabled

Bit 12 **DMAEN1**: DAC channel1 DMA enable

This bit is set and cleared by software.

0: DAC channel1 DMA mode disabled

1: DAC channel1 DMA mode enabled

Bits 11:8 **MAMP1[3:0]**: DAC channel1 mask/amplitude selector

These bits are written by software to select mask in wave generation mode or amplitude in triangle generation mode.

0000: Unmask bit0 of LFSR/ triangle amplitude equal to 1

0001: Unmask bits[1:0] of LFSR/ triangle amplitude equal to 3

0010: Unmask bits[2:0] of LFSR/ triangle amplitude equal to 7

0011: Unmask bits[3:0] of LFSR/ triangle amplitude equal to 15

0100: Unmask bits[4:0] of LFSR/ triangle amplitude equal to 31

0101: Unmask bits[5:0] of LFSR/ triangle amplitude equal to 63

0110: Unmask bits[6:0] of LFSR/ triangle amplitude equal to 127

0111: Unmask bits[7:0] of LFSR/ triangle amplitude equal to 255

1000: Unmask bits[8:0] of LFSR/ triangle amplitude equal to 511

1001: Unmask bits[9:0] of LFSR/ triangle amplitude equal to 1023

1010: Unmask bits[10:0] of LFSR/ triangle amplitude equal to 2047

≥ 1011: Unmask bits[11:0] of LFSR/ triangle amplitude equal to 4095

Bits 7:6 **WAVE1[1:0]**: DAC channel1 noise/triangle wave generation enable

These bits are set and cleared by software.

00: wave generation disabled

01: Noise wave generation enabled

1x: Triangle wave generation enabled

Only used if bit TEN1 = 1 (DAC channel1 trigger enabled).

Bits 5:3 **TSEL1[2:0]**: DAC channel1 trigger selection

These bits select the external event used to trigger DAC channel1

Refer to the trigger selection tables in *Section 19.4.6: DAC trigger selection* for details on trigger configuration and mapping.

Note: Only used if bit TEN1 = 1 (DAC channel1 trigger enabled).

Bit 2 **TEN1**: DAC channel1 trigger enable

This bit is set and cleared by software to enable/disable DAC channel1 trigger.

0: DAC channel1 trigger disabled and data written into the DAC_DHR1 register are transferred one APB1 clock cycle later to the DAC_DOR1 register

1: DAC channel1 trigger enabled and data from the DAC_DHR1 register are transferred three APB1 clock cycles later to the DAC_DOR1 register

Note: When software trigger is selected, the transfer from the DAC_DHR1 *register to the DAC_DOR1 register takes only one APB1 clock cycle.*

Bit 1 Reserved, must be kept at reset value.

Bit 0 **EN1**: DAC channel1 enable

This bit is set and cleared by software to enable/disable DAC channel1.

0: DAC channel1 disabled

1: DAC channel1 enabled

19.7.2 DAC software trigger register (DAC_SWTRGR)

Address offset: 0x04

Reset value: 0x0000 0000

31	30	29	28	27	26	25	24	23	22	21	20	19	18	17	16
Res.	Res.	Res.	Res.	Res.	Res.	Res.	Res.	Res.	Res.	Res.	Res.	Res.	Res.	Res.	Res.

15	14	13	12	11	10	9	8	7	6	5	4	3	2	1	0
Res.	Res.	Res.	Res.	Res.	Res.	Res.	Res.	Res.	Res.	Res.	Res.	Res.	Res.	SWTRIG2	SWTRIG1
														w	w

Bits 31:2 Reserved, must be kept at reset value.

Bit 1 **SWTRIG2**: DAC channel2 software trigger

This bit is set by software to trigger the DAC in software trigger mode.

0: No trigger

1: Trigger

Note: This bit is cleared by hardware (one APB1 clock cycle later) once the DAC_DHR2 register value has been loaded into the DAC_DOR2 register.

This bit is available only on dual-channel DACs. Refer to Section 19.3: DAC implementation.

Bit 0 **SWTRIG1**: DAC channel1 software trigger

This bit is set by software to trigger the DAC in software trigger mode.

0: No trigger

1: Trigger

Note: This bit is cleared by hardware (one APB1 clock cycle later) once the DAC_DHR1 register value has been loaded into the DAC_DOR1 register.

19.7.3 DAC channel1 12-bit right-aligned data holding register (DAC_DHR12R1)

Address offset: 0x08

Reset value: 0x0000 0000

31	30	29	28	27	26	25	24	23	22	21	20	19	18	17	16
Res.	Res.	Res.	Res.	Res.	Res.	Res.	Res.	Res.	Res.	Res.	Res.	Res.	Res.	Res.	Res.

15	14	13	12	11	10	9	8	7	6	5	4	3	2	1	0
Res.	Res.	Res.	Res.	DACC1DHR[11:0]											
				rw	rw	rw	rw	rw	rw	rw	rw	rw	rw	rw	rw

Bits 31:12 Reserved, must be kept at reset value.

Bits 11:0 **DACC1DHR[11:0]**: DAC channel1 12-bit right-aligned data
These bits are written by software. They specify 12-bit data for DAC channel1.

19.7.4 DAC channel1 12-bit left aligned data holding register (DAC_DHR12L1)

Address offset: 0x0C

Reset value: 0x0000 0000

31	30	29	28	27	26	25	24	23	22	21	20	19	18	17	16
Res.	Res.	Res.	Res.	Res.	Res.	Res.	Res.	Res.	Res.	Res.	Res.	Res.	Res.	Res.	Res.

15	14	13	12	11	10	9	8	7	6	5	4	3	2	1	0
DACC1DHR[11:0]												Res.	Res.	Res.	Res.
rw	rw	rw	rw	rw	rw	rw	rw	rw	rw	rw	rw				

Bits 31:16 Reserved, must be kept at reset value.

Bits 15:4 **DACC1DHR[11:0]**: DAC channel1 12-bit left-aligned data
These bits are written by software.
They specify 12-bit data for DAC channel1.

Bits 3:0 Reserved, must be kept at reset value.

19.7.5 DAC channel1 8-bit right aligned data holding register (DAC_DHR8R1)

Address offset: 0x10

Reset value: 0x0000 0000

31	30	29	28	27	26	25	24	23	22	21	20	19	18	17	16
Res.	Res.	Res.	Res.	Res.	Res.	Res.	Res.	Res.	Res.	Res.	Res.	Res.	Res.	Res.	Res.

15	14	13	12	11	10	9	8	7	6	5	4	3	2	1	0
Res.	Res.	Res.	Res.	Res.	Res.	Res.	Res.	DACC1DHR[7:0]							
								rw	rw	rw	rw	rw	rw	rw	rw

Bits 31:8 Reserved, must be kept at reset value.

Bits 7:0 **DACC1DHR[7:0]**: DAC channel1 8-bit right-aligned data
These bits are written by software. They specify 8-bit data for DAC channel1.

19.7.6 DAC channel2 12-bit right aligned data holding register (DAC_DHR12R2)

This register is available only on dual-channel DACs. Refer to *Section 19.3: DAC implementation*.

Address offset: 0x14

Reset value: 0x0000 0000

31	30	29	28	27	26	25	24	23	22	21	20	19	18	17	16
Res.	Res.	Res.	Res.	Res.	Res.	Res.	Res.	Res.	Res.	Res.	Res.	Res.	Res.	Res.	Res.

15	14	13	12	11	10	9	8	7	6	5	4	3	2	1	0
Res.	Res.	Res.	Res.	DACC2DHR[11:0]											
				rw	rw	rw	rw	rw	rw	rw	rw	rw	rw	rw	rw

Bits 31:12 Reserved, must be kept at reset value.

Bits 11:0 **DACC2DHR[11:0]**: DAC channel2 12-bit right-aligned data
These bits are written by software. They specify 12-bit data for DAC channel2.

19.7.7 DAC channel2 12-bit left aligned data holding register (DAC_DHR12L2)

This register is available only on dual-channel DACs. Refer to *Section 19.3: DAC implementation*.

Address offset: 0x18

Reset value: 0x0000 0000

31	30	29	28	27	26	25	24	23	22	21	20	19	18	17	16
Res.	Res.	Res.	Res.	Res.	Res.	Res.	Res.	Res.	Res.	Res.	Res.	Res.	Res.	Res.	Res.

15	14	13	12	11	10	9	8	7	6	5	4	3	2	1	0
DACC2DHR[11:0]												Res.	Res.	Res.	Res.
rw	rw	rw	rw	rw	rw	rw	rw	rw	rw	rw	rw				

Bits 31:16 Reserved, must be kept at reset value.

Bits 15:4 **DACC2DHR[11:0]**: DAC channel2 12-bit left-aligned data
These bits are written by software which specify 12-bit data for DAC channel2.

Bits 3:0 Reserved, must be kept at reset value.

19.7.8 DAC channel2 8-bit right-aligned data holding register (DAC_DHR8R2)

This register is available only on dual-channel DACs. Refer to *Section 19.3: DAC implementation*.

Address offset: 0x1C

Reset value: 0x0000 0000

31	30	29	28	27	26	25	24	23	22	21	20	19	18	17	16
Res.	Res.	Res.	Res.	Res.	Res.	Res.	Res.	Res.	Res.	Res.	Res.	Res.	Res.	Res.	Res.

15	14	13	12	11	10	9	8	7	6	5	4	3	2	1	0
Res.	Res.	Res.	Res.	Res.	Res.	Res.	Res.	DACC2DHR[7:0]							
								rw	rw	rw	rw	rw	rw	rw	rw

Bits 31:8 Reserved, must be kept at reset value.

Bits 7:0 **DACC2DHR[7:0]**: DAC channel2 8-bit right-aligned data
These bits are written by software which specifies 8-bit data for DAC channel2.

19.7.9 Dual DAC 12-bit right-aligned data holding register (DAC_DHR12RD)

Address offset: 0x20

Reset value: 0x0000 0000

31	30	29	28	27	26	25	24	23	22	21	20	19	18	17	16
Res.	Res.	Res.	Res.	DACC2DHR[11:0]											
				rw	rw	rw	rw	rw	rw	rw	rw	rw	rw	rw	rw
15	14	13	12	11	10	9	8	7	6	5	4	3	2	1	0
Res.	Res.	Res.	Res.	DACC1DHR[11:0]											
				rw	rw	rw	rw	rw	rw	rw	rw	rw	rw	rw	rw

Bits 31:28 Reserved, must be kept at reset value.

Bits 27:16 **DACC2DHR[11:0]**: DAC channel2 12-bit right-aligned data
These bits are written by software which specifies 12-bit data for DAC channel2.

Bits 15:12 Reserved, must be kept at reset value.

Bits 11:0 **DACC1DHR[11:0]**: DAC channel1 12-bit right-aligned data
These bits are written by software which specifies 12-bit data for DAC channel1.

19.7.10 Dual DAC 12-bit left aligned data holding register (DAC_DHR12LD)

Address offset: 0x24

Reset value: 0x0000 0000

31	30	29	28	27	26	25	24	23	22	21	20	19	18	17	16
DACC2DHR[11:0]												Res.	Res.	Res.	Res.
rw	rw	rw	rw	rw	rw	rw	rw	rw	rw	rw	rw				
15	14	13	12	11	10	9	8	7	6	5	4	3	2	1	0
DACC1DHR[11:0]												Res.	Res.	Res.	Res.
rw	rw	rw	rw	rw	rw	rw	rw	rw	rw	rw	rw				

Bits 31:20 **DACC2DHR[11:0]**: DAC channel2 12-bit left-aligned data
These bits are written by software which specifies 12-bit data for DAC channel2.

Bits 19:16 Reserved, must be kept at reset value.

Bits 15:4 **DACC1DHR[11:0]**: DAC channel1 12-bit left-aligned data
These bits are written by software which specifies 12-bit data for DAC channel1.

Bits 3:0 Reserved, must be kept at reset value.

19.7.11 Dual DAC 8-bit right aligned data holding register (DAC_DHR8RD)

Address offset: 0x28

Reset value: 0x0000 0000

31	30	29	28	27	26	25	24	23	22	21	20	19	18	17	16
Res.	Res.	Res.	Res.	Res.	Res.	Res.	Res.	Res.	Res.	Res.	Res.	Res.	Res.	Res.	Res.

15	14	13	12	11	10	9	8	7	6	5	4	3	2	1	0
DACC2DHR[7:0]								DACC1DHR[7:0]							
rw	rw	rw	rw	rw	rw	rw	rw	rw	rw	rw	rw	rw	rw	rw	rw

Bits 31:16 Reserved, must be kept at reset value.

Bits 15:8 **DACC2DHR[7:0]**: DAC channel2 8-bit right-aligned data
These bits are written by software which specifies 8-bit data for DAC channel2.

Bits 7:0 **DACC1DHR[7:0]**: DAC channel1 8-bit right-aligned data
These bits are written by software which specifies 8-bit data for DAC channel1.

19.7.12 DAC channel1 data output register (DAC_DOR1)

Address offset: 0x2C

Reset value: 0x0000 0000

31	30	29	28	27	26	25	24	23	22	21	20	19	18	17	16
Res.	Res.	Res.	Res.	Res.	Res.	Res.	Res.	Res.	Res.	Res.	Res.	Res.	Res.	Res.	Res.

15	14	13	12	11	10	9	8	7	6	5	4	3	2	1	0
Res.	Res.	Res.	Res.	DACC1DOR[11:0]											
				r	r	r	r	r	r	r	r	r	r	r	r

Bits 31:12 Reserved, must be kept at reset value.

Bits 11:0 **DACC1DOR[11:0]**: DAC channel1 data output
These bits are read-only, they contain data output for DAC channel1.

19.7.13 DAC channel2 data output register (DAC_DOR2)

This register is available only on dual-channel DACs. Refer to *Section 19.3: DAC implementation*.

Address offset: 0x30

Reset value: 0x0000 0000

31	30	29	28	27	26	25	24	23	22	21	20	19	18	17	16
Res.	Res.	Res.	Res.	Res.	Res.	Res.	Res.	Res.	Res.	Res.	Res.	Res.	Res.	Res.	Res.

15	14	13	12	11	10	9	8	7	6	5	4	3	2	1	0
Res.	Res.	Res.	Res.	DACC2DOR[11:0]											
				r	r	r	r	r	r	r	r	r	r	r	r

Bits 31:12 Reserved, must be kept at reset value.

Bits 11:0 **DACC2DOR[11:0]**: DAC channel2 data output

These bits are read-only, they contain data output for DAC channel2.

19.7.14 DAC status register (DAC_SR)

Address offset: 0x34

Reset value: 0x0000 0000

31	30	29	28	27	26	25	24	23	22	21	20	19	18	17	16
BWST2	CAL_ FLAG2	DMAU DR2	Res.	Res.	Res.	Res.	Res.	Res.	Res.	Res.	Res.	Res.	Res.	Res.	Res.
r	r	rc_w1													

15	14	13	12	11	10	9	8	7	6	5	4	3	2	1	0
BWST1	CAL_ FLAG1	DMAU DR1	Res.	Res.	Res.	Res.	Res.	Res.	Res.	Res.	Res.	Res.	Res.	Res.	Res.
r	r	rc_w1													

Bit 31 **BWST2**: DAC channel2 busy writing sample time flag

This bit is systematically set just after Sample and hold mode enable. It is set each time the software writes the register DAC_SHSR2, It is cleared by hardware when the write operation of DAC_SHSR2 is complete. (It takes about 3 LSI periods of synchronization).

0:There is no write operation of DAC_SHSR2 ongoing: DAC_SHSR2 can be written

1:There is a write operation of DAC_SHSR2 ongoing: DAC_SHSR2 cannot be written

Note: This bit is available only on dual-channel DACs. Refer to Section 19.3: DAC implementation.

Bit 30 **CAL_FLAG2**: DAC channel2 calibration offset status

This bit is set and cleared by hardware

0: calibration trimming value is lower than the offset correction value

1: calibration trimming value is equal or greater than the offset correction value

Note: This bit is available only on dual-channel DACs. Refer to Section 19.3: DAC implementation.

Bit 29 **DMAUDR2**: DAC channel2 DMA underrun flag

This bit is set by hardware and cleared by software (by writing it to 1).

0: No DMA underrun error condition occurred for DAC channel2

1: DMA underrun error condition occurred for DAC channel2 (the currently selected trigger is driving DAC channel2 conversion at a frequency higher than the DMA service capability rate).

Note: This bit is available only on dual-channel DACs. Refer to Section 19.3: DAC implementation.

Bit 28 Reserved, must be kept at reset value.

Bit 27 Reserved, must be kept at reset value.

Bits 26:16 Reserved, must be kept at reset value.

Bit 15 **BWST1**: DAC channel1 busy writing sample time flag

This bit is systematically set just after Sample and hold mode enable and is set each time the software writes the register DAC_SHSR1, It is cleared by hardware when the write operation of DAC_SHSR1 is complete. (It takes about 3 LSI periods of synchronization).

0:There is no write operation of DAC_SHSR1 ongoing: DAC_SHSR1 can be written

1:There is a write operation of DAC_SHSR1 ongoing: DAC_SHSR1 cannot be written

Bit 14 **CAL_FLAG1**: DAC channel1 calibration offset status

This bit is set and cleared by hardware

0: calibration trimming value is lower than the offset correction value

1: calibration trimming value is equal or greater than the offset correction value

Bit 13 **DMAUDR1**: DAC channel1 DMA underrun flag

This bit is set by hardware and cleared by software (by writing it to 1).

0: No DMA underrun error condition occurred for DAC channel1

1: DMA underrun error condition occurred for DAC channel1 (the currently selected trigger is driving DAC channel1 conversion at a frequency higher than the DMA service capability rate)

Bit 12 Reserved, must be kept at reset value.

Bit 11 Reserved, must be kept at reset value.

Bits 10:0 Reserved, must be kept at reset value.

19.7.15 DAC calibration control register (DAC_CCR)

Address offset: 0x38

Reset value: 0x00XX 00XX

31	30	29	28	27	26	25	24	23	22	21	20	19	18	17	16
Res.	Res.	Res.	Res.	Res.	Res.	Res.	Res.	Res.	Res.	Res.	OTRIM2[4:0]				
											rw	rw	rw	rw	rw

15	14	13	12	11	10	9	8	7	6	5	4	3	2	1	0
Res.	Res.	Res.	Res.	Res.	Res.	Res.	Res.	Res.	Res.	Res.	OTRIM1[4:0]				
											rw	rw	rw	rw	rw

Bits 31:21 Reserved, must be kept at reset value.

Bits 20:16 **OTRIM2[4:0]**: DAC channel2 offset trimming value

These bits are available only on dual-channel DACs. Refer to *Section 19.3: DAC implementation*.

Bits 15:5 Reserved, must be kept at reset value.

Bits 4:0 **OTRIM1[4:0]**: DAC channel1 offset trimming value

19.7.16 DAC mode control register (DAC_MCR)

Address offset: 0x3C

Reset value: 0x0000 0000

31	30	29	28	27	26	25	24	23	22	21	20	19	18	17	16
Res.	Res.	Res.	Res.	Res.	Res.	Res.	Res.	Res.	Res.	Res.	Res.	Res.	MODE2[2:0]		
													rw	rw	rw

15	14	13	12	11	10	9	8	7	6	5	4	3	2	1	0
Res.	Res.	Res.	Res.	Res.	Res.	Res.	Res.	Res.	Res.	Res.	Res.	Res.	MODE1[2:0]		
													rw	rw	rw

Bits 31:26 Reserved, must be kept at reset value.

Bit 25 Reserved, must be kept at reset value.

Bit 24 Reserved, must be kept at reset value.

Bits 23:19 Reserved, must be kept at reset value.

Bits 18:16 **MODE2[2:0]:** DAC channel2 mode

These bits can be written only when the DAC is disabled and not in the calibration mode (when bit EN2=0 and bit CEN2 =0 in the DAC_CR register). If EN2=1 or CEN2 =1 the write operation is ignored.

They can be set and cleared by software to select the DAC channel2 mode:

– DAC channel2 in Normal mode

000: DAC channel2 is connected to external pin with Buffer enabled

001: DAC channel2 is connected to external pin and to on chip peripherals with buffer enabled

010: DAC channel2 is connected to external pin with buffer disabled

011: DAC channel2 is connected to on chip peripherals with Buffer disabled

– DAC channel2 in Sample and hold mode

100: DAC channel2 is connected to external pin with Buffer enabled

101: DAC channel2 is connected to external pin and to on chip peripherals with Buffer enabled

110: DAC channel2 is connected to external pin and to on chip peripherals with Buffer disabled

111: DAC channel2 is connected to on chip peripherals with Buffer disabled

Note: This register can be modified only when EN2=0.

Refer to Section 19.3: DAC implementation for the availability of DAC channel2.

Bits 15:14 Reserved, must be kept at reset value.

Bits 13:10 Reserved, must be kept at reset value.

Bit 9 Reserved, must be kept at reset value.

Bit 8 Reserved, must be kept at reset value.

Bits 7:3 Reserved, must be kept at reset value.

Bits 2:0 **MODE1[2:0]:** DAC channel1 mode

These bits can be written only when the DAC is disabled and not in the calibration mode (when bit EN1=0 and bit CEN1 =0 in the DAC_CR register). If EN1=1 or CEN1 =1 the write operation is ignored.

They can be set and cleared by software to select the DAC channel1 mode:

– DAC channel1 in Normal mode

000: DAC channel1 is connected to external pin with Buffer enabled

001: DAC channel1 is connected to external pin and to on chip peripherals with Buffer enabled

010: DAC channel1 is connected to external pin with Buffer disabled

011: DAC channel1 is connected to on chip peripherals with Buffer disabled

– DAC channel1 in sample & hold mode

100: DAC channel1 is connected to external pin with Buffer enabled

101: DAC channel1 is connected to external pin and to on chip peripherals with Buffer enabled

110: DAC channel1 is connected to external pin and to on chip peripherals with Buffer disabled

111: DAC channel1 is connected to on chip peripherals with Buffer disabled

Note: This register can be modified only when EN1=0.

19.7.17 DAC channel1 sample and hold sample time register (DAC_SHSR1)

Address offset: 0x40

Reset value: 0x0000 0000

31	30	29	28	27	26	25	24	23	22	21	20	19	18	17	16
Res.	Res.	Res.	Res.	Res.	Res.	Res.	Res.	Res.	Res.	Res.	Res.	Res.	Res.	Res.	Res.

15	14	13	12	11	10	9	8	7	6	5	4	3	2	1	0
Res.	Res.	Res.	Res.	Res.	Res.	TSAMPLE1[9:0]									
						rw	rw	rw	rw	rw	rw	rw	rw	rw	rw

Bits 31:10 Reserved, must be kept at reset value.

Bits 9:0 **TSAMPLE1[9:0]:** DAC channel1 sample time (only valid in Sample and hold mode)

These bits can be written when the DAC channel1 is disabled or also during normal operation. in the latter case, the write can be done only when BWST1 of DAC_SR register is low, If BWST1=1, the write operation is ignored.

*Note: It represents the number of LSI clocks to perform a sample phase. Sampling time = (*TSAMPLE1[9:0] + 1) x *LSI clock period.*

19.7.18 DAC channel2 sample and hold sample time register (DAC_SHSR2)

This register is available only on dual-channel DACs. Refer to *Section 19.3: DAC implementation*.

Address offset: 0x44

Reset value: 0x0000 0000

31	30	29	28	27	26	25	24	23	22	21	20	19	18	17	16
Res.	Res.	Res.	Res.	Res.	Res.	Res.	Res.	Res.	Res.	Res.	Res.	Res.	Res.	Res.	Res.

15	14	13	12	11	10	9	8	7	6	5	4	3	2	1	0
Res.	Res.	Res.	Res.	Res.	Res.	TSAMPLE2[9:0]									
						rw	rw	rw	rw	rw	rw	rw	rw	rw	rw

Bits 31:10 Reserved, must be kept at reset value.

Bits 9:0 **TSAMPLE2[9:0]:** DAC channel2 sample time (only valid in Sample and hold mode)

These bits can be written when the DAC channel2 is disabled or also during normal operation. in the latter case, the write can be done only when BWST2 of DAC_SR register is low, if BWST2=1, the write operation is ignored.

*Note: It represents the number of LSI clocks to perform a sample phase. Sampling time = (*TSAMPLE1[9:0] + 1) x *LSI clock period.*

19.7.19 DAC sample and hold time register (DAC_SHHR)

Address offset: 0x48

Reset value: 0x0001 0001

31	30	29	28	27	26	25	24	23	22	21	20	19	18	17	16
Res.	Res.	Res.	Res.	Res.	Res.	THOLD2[9:0]									
						rw	rw	rw	rw	rw	rw	rw	rw	rw	rw

15	14	13	12	11	10	9	8	7	6	5	4	3	2	1	0
Res.	Res.	Res.	Res.	Res.	Res.	THOLD1[9:0]									
						rw	rw	rw	rw	rw	rw	rw	rw	rw	rw

Bits 31:26 Reserved, must be kept at reset value.

Bits 25:16 **THOLD2[9:0]:** DAC channel2 hold time (only valid in Sample and hold mode).
Hold time= (THOLD[9:0]) x LSI clock period

Note: This register can be modified only when EN2=0.

These bits are available only on dual-channel DACs. Refer to Section 19.3: DAC implementation.

Bits 15:10 Reserved, must be kept at reset value.

Bits 9:0 **THOLD1[9:0]:** DAC channel1 hold time (only valid in Sample and hold mode)
Hold time= (THOLD[9:0]) x LSI clock period

Note: This register can be modified only when EN1=0.

Note: These bits can be written only when the DAC channel is disabled and in Normal operating mode (when bit ENx=0 and bit CENx=0 in the DAC_CR register). If ENx=1 or CENx=1 the write operation is ignored.

19.7.20 DAC sample and hold refresh time register (DAC_SHRR)

Address offset: 0x4C

Reset value: 0x0001 0001

31	30	29	28	27	26	25	24	23	22	21	20	19	18	17	16
Res.	Res.	Res.	Res.	Res.	Res.	Res.	Res.	TREFRESH2[7:0]							
								rw	rw	rw	rw	rw	rw	rw	rw

15	14	13	12	11	10	9	8	7	6	5	4	3	2	1	0
Res.	Res.	Res.	Res.	Res.	Res.	Res.	Res.	TREFRESH1[7:0]							
								rw	rw	rw	rw	rw	rw	rw	rw

Bits 31:24 Reserved, must be kept at reset value.

Bits 23:16 **TREFRESH2[7:0]:** DAC channel2 refresh time (only valid in Sample and hold mode)
Refresh time= (TREFRESH[7:0]) x LSI clock period

Note: This register can be modified only when EN2=0.
These bits are available only on dual-channel DACs. Refer to Section 19.3: DAC implementation.

Bits 15:8 Reserved, must be kept at reset value.

Bits 7:0 **TREFRESH1[7:0]:** DAC channel1 refresh time (only valid in Sample and hold mode)
Refresh time= (TREFRESH[7:0]) x LSI clock period

Note: This register can be modified only when EN1=0.

Note: These bits can be written only when the DAC channel is disabled and in Normal operating mode (when bit ENx=0 and bit CENx=0 in the DAC_CR register). If ENx=1 or CENx=1 the write operation is ignored.

19.7.21 DAC register map

Table 129 summarizes the DAC registers.

Table 129. DAC register map and reset values

Offset	Register name	31	30	29	28	27	26	25	24	23	22	21	20	19	18	17	16	15	14	13	12	11	10	9	8	7	6	5	4	3	2	1	0
0x00	DAC_CR	Res.	CEN2	DMAUDRIE2	DMAEN2	MAMP2[3:0]				WAVE2[2:0]		TSEL22	TSEL21	TSEL20	TEN2	Res.	EN2	Res.	CEN1	DMAUDRIE1	DMAEN1	MAMP1[3:0]				WAVE1[1:0]		TSEL12	TSEL11	TSEL10	TEN1	Res.	EN1
	Reset value		0	0	0	0	0	0	0	0	0	0	0	0	0		0		0	0	0	0	0	0	0	0	0	0	0	0	0		0
0x04	DAC_ SWTRGR	Res.	Res.	Res.	Res.	Res.	Res.	Res.	Res.	Res.	Res.	Res.	Res.	Res.	Res.	Res.	Res.	Res.	Res.	Res.	Res.	Res.	Res.	Res.	Res.	Res.	Res.	Res.	Res.	Res.	Res.	SWTRIG2	SWTRIG1
	Reset value																															0	0
0x08	DAC_ DHR12R1	Res.	Res.	Res.	Res.	Res.	Res.	Res.	Res.	Res.	Res.	Res.	Res.	Res.	Res.	Res.	Res.	Res.	Res.	Res.	Res.	DACC1DHR[11:0]											
	Reset value																					0	0	0	0	0	0	0	0	0	0	0	0
0x0C	DAC_ DHR12L1	Res.	Res.	Res.	Res.	Res.	Res.	Res.	Res.	Res.	Res.	Res.	Res.	Res.	Res.	Res.	Res.	DACC1DHR[11:0]												Res.	Res.	Res.	Res.
	Reset value																	0	0	0	0	0	0	0	0	0	0	0	0				
0x10	DAC_ DHR8R1	Res.	Res.	Res.	Res.	Res.	Res.	Res.	Res.	Res.	Res.	Res.	Res.	Res.	Res.	Res.	Res.	Res.	Res.	Res.	Res.	Res.	Res.	Res.	Res.	DACC1DHR[7:0]							
	Reset value																									0	0	0	0	0	0	0	0
0x14	DAC_ DHR12R2	Res.	Res.	Res.	Res.	Res.	Res.	Res.	Res.	Res.	Res.	Res.	Res.	Res.	Res.	Res.	Res.	Res.	Res.	Res.	Res.	DACC2DHR[11:0]											
	Reset value																					0	0	0	0	0	0	0	0	0	0	0	0
0x18	DAC_ DHR12L2	Res.	Res.	Res.	Res.	Res.	Res.	Res.	Res.	Res.	Res.	Res.	Res.	Res.	Res.	Res.	Res.	DACC2DHR[11:0]												Res.	Res.	Res.	Res.
	Reset value																	0	0	0	0	0	0	0	0	0	0	0	0				
0x1C	DAC_ DHR8R2	Res.	Res.	Res.	Res.	Res.	Res.	Res.	Res.	Res.	Res.	Res.	Res.	Res.	Res.	Res.	Res.	Res.	Res.	Res.	Res.	Res.	Res.	Res.	Res.	DACC2DHR[7:0]							
	Reset value																									0	0	0	0	0	0	0	0
0x20	DAC_ DHR12RD	Res.	Res.	Res.	Res.	DACC2DHR[11:0]												Res.	Res.	Res.	Res.	DACC1DHR[11:0]											
	Reset value					0	0	0	0	0	0	0	0	0	0	0	0					0	0	0	0	0	0	0	0	0	0	0	0
0x24	DAC_ DHR12LD	DACC2DHR[11:0]												Res.	Res.	Res.	Res.	DACC1DHR[11:0]												Res.	Res.	Res.	Res.
	Reset value	0	0	0	0	0	0	0	0	0	0	0	0					0	0	0	0	0	0	0	0	0	0	0	0				
0x28	DAC_ DHR8RD	Res.	Res.	Res.	Res.	Res.	Res.	Res.	Res.	Res.	Res.	Res.	Res.	Res.	Res.	Res.	Res.	DACC2DHR[7:0]								DACC1DHR[7:0]							
	Reset value																	0	0	0	0	0	0	0	0	0	0	0	0	0	0	0	0
0x2C	DAC_ DOR1	Res.	Res.	Res.	Res.	Res.	Res.	Res.	Res.	Res.	Res.	Res.	Res.	Res.	Res.	Res.	Res.	Res.	Res.	Res.	Res.	DACC1DOR[11:0]											
	Reset value																					0	0	0	0	0	0	0	0	0	0	0	0
0x30	DAC_ DOR2	Res.	Res.	Res.	Res.	Res.	Res.	Res.	Res.	Res.	Res.	Res.	Res.	Res.	Res.	Res.	Res.	Res.	Res.	Res.	Res.	DACC2DOR[11:0]											
	Reset value																					0	0	0	0	0	0	0	0	0	0	0	0
0x34	DAC_SR	BWST2	CAL_FLAG2	DMAUDR2	Res.	Res.	Res.	Res.	Res.	Res.	Res.	Res.	Res.	Res.	Res.	Res.	Res.	BWST1	CAL_FLAG1	DMAUDR1	Res.	Res.	Res.	Res.	Res.	Res.	Res.	Res.	Res.	Res.	Res.	Res.	Res.
	Reset value	0	0	0														0	0	0													

Table 129. DAC register map and reset values (continued)

Offset	Register name	31	30	29	28	27	26	25	24	23	22	21	20	19	18	17	16	15	14	13	12	11	10	9	8	7	6	5	4	3	2	1	0
0x38	**DAC_CCR**	Res.	Res.	Res.	Res.	Res.	Res.	Res.	Res.	Res.	Res.	Res.	OTRIM2[4:0]					Res.	Res.	Res.	Res.	Res.	Res.	Res.	Res.	Res.	Res.	Res.	OTRIM1[4:0]				
	Reset value												X	X	X	X	X												X	X	X	X	X
0x3C	**DAC_MCR**	Res.	Res.	Res.	Res.	Res.	Res.	Res.	Res.	Res.	Res.	Res.	Res.	Res.	MODE2 [2:0]			Res.	Res.	Res.	Res.	Res.	Res.	Res.	Res.	Res.	Res.	Res.	Res.	Res.	MODE1 [2:0]		
	Reset value														0	0	0														0	0	0
0x40	**DAC_ SHSR1**	Res.	Res.	Res.	Res.	Res.	Res.	Res.	Res.	Res.	Res.	Res.	Res.	Res.	Res.	Res.	Res.	Res.	Res.	Res.	Res.	Res.	Res.	TSAMPLE1[9:0]									
	Reset value																							0	0	0	0	0	0	0	0	0	0
0x44	**DAC_ SHSR2**	Res.	Res.	Res.	Res.	Res.	Res.	Res.	Res.	Res.	Res.	Res.	Res.	Res.	Res.	Res.	Res.	Res.	Res.	Res.	Res.	Res.	Res.	TSAMPLE2[9:0]									
	Reset value																							0	0	0	0	0	0	0	0	0	0
0x48	**DAC_ SHHR**	Res.	Res.	Res.	Res.	Res.	Res.	THOLD2[9:0]										Res.	Res.	Res.	Res.	Res.	Res.	THOLD1[9:0]									
	Reset value							0	0	0	0	0	0	0	0	0	1							0	0	0	0	0	0	0	0	0	1
0x4C	**DAC_ SHRR**	Res.	Res.	Res.	Res.	Res.	Res.	Res.	Res.	TREFRESH2[7:0]								Res.	Res.	Res.	Res.	Res.	Res.	Res.	Res.	TREFRESH1[7:0]							
	Reset value									0	0	0	0	0	0	0	1									0	0	0	0	0	0	0	1

Refer to *Section 2.2 on page 75* for the register boundary addresses.

20 Digital camera interface (DCMI)

This section applies to STM32L49x/L4Ax devices only.

20.1 Introduction

The digital camera is a synchronous parallel interface able to receive a high-speed data flow from an external 8-, 10-, 12- or 14-bit CMOS camera module. It supports different data formats: YCbCr4:2:2/RGB565 progressive video and compressed data (JPEG).

20.2 DCMI main features

- 8-, 10-, 12- or 14-bit parallel interface
- Embedded/external line and frame synchronization
- Continuous or snapshot mode
- Crop feature
- Supports the following data formats:
  - 8/10/12/14-bit progressive video: either monochrome or raw bayer
  - YCbCr 4:2:2 progressive video
  - RGB 565 progressive video
  - Compressed data: JPEG

20.3 DCMI functional description

The digital camera interface is a synchronous parallel interface that can receive high-speed (up to 54 Mbytes/s) data flows. It consists of up to 14 data lines (D13-D0) and a pixel clock line (DCMI_PIXCLK). The pixel clock has a programmable polarity, so that data can be captured on either the rising or the falling edge of the pixel clock.

The data are packed into a 32-bit data register (DCMI_DR) and then transferred through a general-purpose DMA channel. The image buffer is managed by the DMA, not by the camera interface.

The data received from the camera can be organized in lines/frames (raw YUB/RGB/Bayer modes) or can be a sequence of JPEG images. To enable JPEG image reception, the JPEG bit (bit 3 of DCMI_CR register) must be set.

The data flow is synchronized either by hardware using the optional DCMI_HSYNC (horizontal synchronization) and DCMI_VSYNC (vertical synchronization) signals or by synchronization codes embedded in the data flow.

20.3.1 DCMI block diagram

Figure 146 shows the DCMI block diagram.

Figure 146. DCMI block diagram

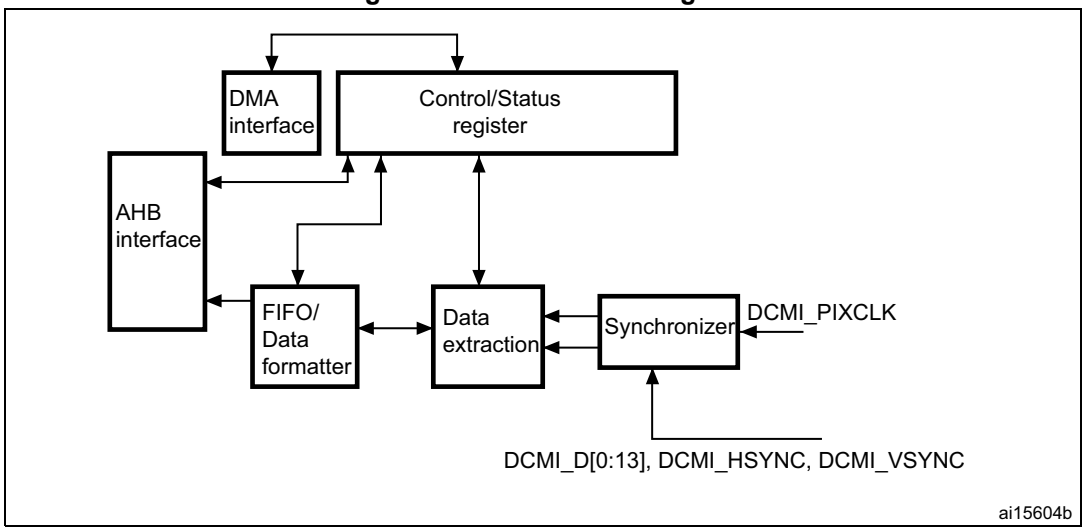

Figure 147. Top-level block diagram

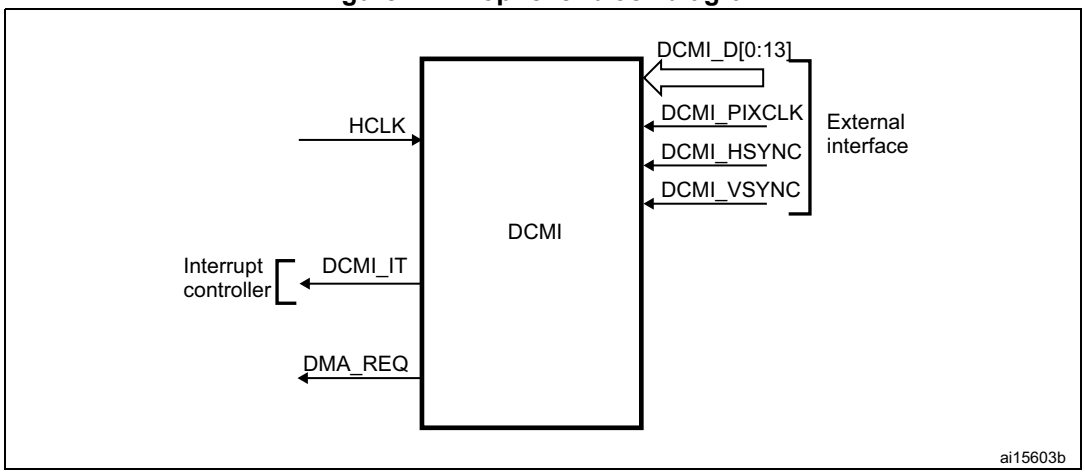

20.3.2 DCMI pins

The following table shows DCMI pins.

Table 130. DCMI input/output pins

Pin name		Signal type	Description
8 bits 10 bits 12 bits 14 bits	DCMI_D[0..7] DCMI_D[0..9] DCMI_D[0..11] DCMI_D[0..13]	Inputs	DCMI data
DCMI_PIXCLK		Input	Pixel clock
DCMI_HSYNC		Input	Horizontal synchronization / Data valid
DCMI_VSYNC		Input	Vertical synchronization

20.3.3 DCMI clocks

The digital camera interface uses two clock domains, DCMI_PIXCLK and HCLK. The signals generated with DCMI_PIXCLK are sampled on the rising edge of HCLK once they are stable. An enable signal is generated in the HCLK domain, to indicate that data coming from the camera are stable and can be sampled. The maximum DCMI_PIXCLK period must be higher than 2.5 HCLK periods.

20.3.4 DCMI DMA interface

The DMA interface is active when the CAPTURE bit of the DCMI_CR register is set. A DMA request is generated each time the camera interface receives a complete 32-bit data block in its register.

20.3.5 DCMI physical interface

The interface is composed of 11/13/15/17 inputs. Only the Slave mode is supported.

The camera interface can capture 8-bit, 10-bit, 12-bit or 14-bit data depending on the EDM[1:0] bits of the DCMI_CR register. If less than 14 bits are used, the unused input pins must be connected to ground.

DCMI pins are shown in *Table 130*.

The data are synchronous with DCMI_PIXCLK and change on the rising/falling edge of the pixel clock depending on the polarity.

The DCMI_HSYNC signal indicates the start/end of a line.

The DCMI_VSYNC signal indicates the start/end of a frame

Figure 148. DCMI signal waveforms

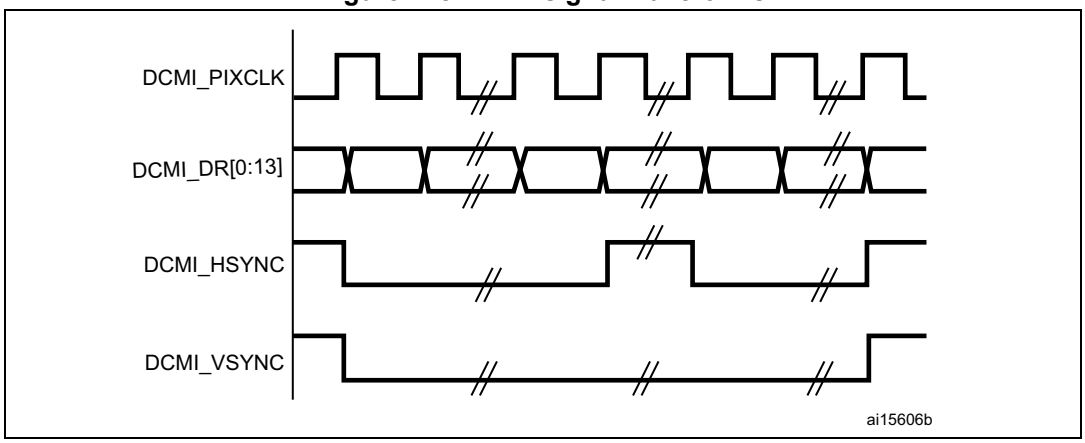

1. The capture edge of DCMI_PIXCLK is the falling edge, the active state of DCMI_HSYNC and DCMI_VSYNC is 1.
2. DCMI_HSYNC and DCMI_VSYNC can change states at the same time.

8-bit data

When EDM[1:0] = 00 in DCMI_CR the interface captures 8 LSBs at its input (DCMI_D[0:7]) and stores them as 8-bit data. The DCMI_D[13:8] inputs are ignored. In this case, to capture a 32-bit word, the camera interface takes four pixel clock cycles.

The first captured data byte is placed in the LSB position in the 32-bit word and the 4th captured data byte is placed in the MSB position in the 32-bit word. *Table 131* gives an example of the positioning of captured data bytes in two 32-bit words.

Table 131. Positioning of captured data bytes in 32-bit words (8-bit width)

Byte address	31:24	23:16	15:8	7:0
0	D_{n+3}[7:0]	D_{n+2}[7:0]	D_{n+1}[7:0]	D_n[7:0]
4	D_{n+7}[7:0]	D_{n+6}[7:0]	D_{n+5}[7:0]	D_{n+4}[7:0]

10-bit data

When EDM[1:0] = 01 in DCMI_CR, the camera interface captures 10-bit data at its input DCMI_D[0..9] and stores them as the 10 least significant bits of a 16-bit word. The remaining most significant bits of the DCMI_DR register (bits 11 to 15) are cleared to zero. So, in this case, a 32-bit data word is made up every two pixel clock cycles.

The first captured data are placed in the LSB position in the 32-bit word and the 2nd captured data are placed in the MSB position in the 32-bit word as shown in *Table 132*.

Table 132. Positioning of captured data bytes in 32-bit words (10-bit width)

Byte address	31:26	25:16	15:10	9:0
0	0	D_{n+1}[9:0]	0	D_n[9:0]
4	0	D_{n+3}[9:0]	0	D_{n+2}[9:0]

12-bit data

When EDM[1:0] = 10 in DCMI_CR, the camera interface captures the 12-bit data at its input DCMI_D[0..11] and stores them as the 12 least significant bits of a 16-bit word. The remaining most significant bits are cleared to zero. So, in this case a 32-bit data word is made up every two pixel clock cycles.

The first captured data are placed in the LSB position in the 32-bit word and the 2nd captured data are placed in the MSB position in the 32-bit word as shown in *Table 133*.

Table 133. Positioning of captured data bytes in 32-bit words (12-bit width)

Byte address	31:28	27:16	15:12	11:0
0	0	D_{n+1}[11:0]	0	D_n[11:0]
4	0	D_{n+3}[11:0]	0	D_{n+2}[11:0]

14-bit data

When EDM[1:0] = 11 in DCMI_CR, the camera interface captures the 14-bit data at its input DCMI_D[0..13] and stores them as the 14 least significant bits of a 16-bit word. The remaining most significant bits are cleared to zero. So, in this case a 32-bit data word is made up every two pixel clock cycles.

The first captured data are placed in the LSB position in the 32-bit word and the 2nd captured data are placed in the MSB position in the 32-bit word as shown in *Table 134*.

Table 134. Positioning of captured data bytes in 32-bit words (14-bit width)

Byte address	31:30	29:16	15:14	13:0
0	0	D_{n+1}[13:0]	0	D_n[13:0]
4	0	D_{n+3}[13:0]	0	D_{n+2}[13:0]

20.3.6 DCMI synchronization

The digital camera interface supports embedded or hardware (DCMI_HSYNC and DCMI_VSYNC) synchronization. When embedded synchronization is used, it is up to the digital camera module to make sure that the 0x00 and 0xFF values are used ONLY for synchronization (not in data). Embedded synchronization codes are supported only for the 8-bit parallel data interface width (that is, in the DCMI_CR register, the EDM[1:0] bits should be cleared).

For compressed data, the DCMI supports only the hardware synchronization mode. In this case, DCMI_VSYNC is used as a start/end of the image, and DCMI_HSYNC is used as a Data Valid signal. *Figure 149* shows the corresponding timing diagram.

Figure 149. Timing diagram

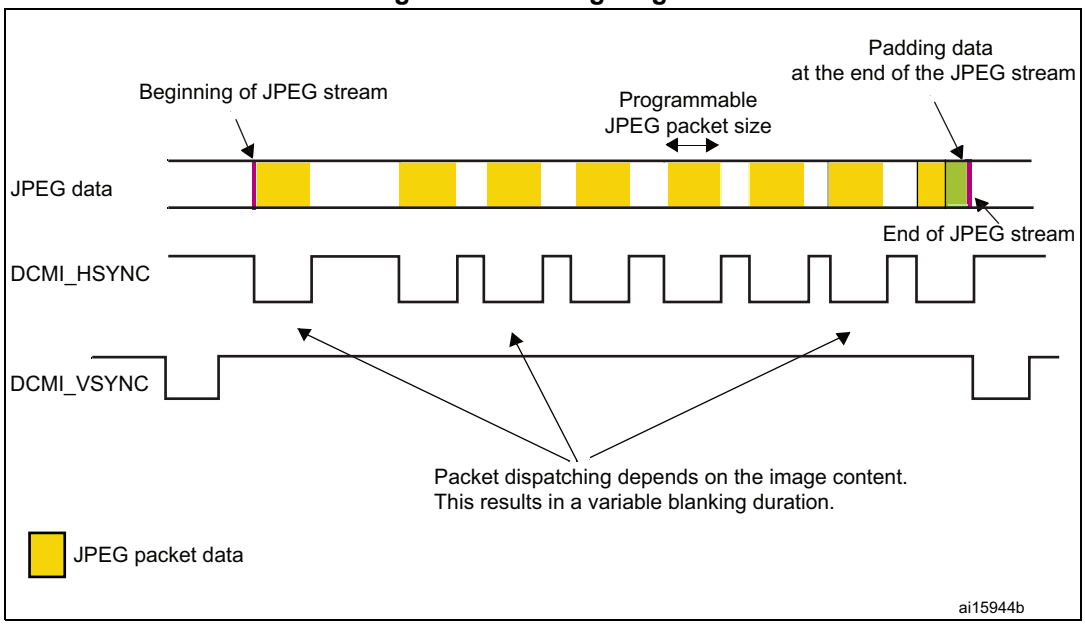

Hardware synchronization mode

In hardware synchronization mode, the two synchronization signals (DCMI_HSYNC/DCMI_VSYNC) are used.

Depending on the camera module/mode, data may be transmitted during horizontal/vertical synchronization periods. The DCMI_HSYNC/DCMI_VSYNC signals act like blanking signals since all the data received during DCMI_HSYNC/DCMI_VSYNC active periods are ignored.

In order to correctly transfer images into the DMA/RAM buffer, data transfer is synchronized with the DCMI_VSYNC signal. When the hardware synchronization mode is selected, and

capture is enabled (CAPTURE bit set in DCMI_CR), data transfer is synchronized with the deactivation of the DCMI_VSYNC signal (next start of frame).

Transfer can then be continuous, with successive frames transferred by DMA to successive buffers or the same/circular buffer. To allow the DMA management of successive frames, a VSIF (Vertical synchronization interrupt flag) is activated at the end of each frame.

Embedded data synchronization mode

In this synchronization mode, the data flow is synchronized using 32-bit codes embedded in the data flow. These codes use the 0x00/0xFF values that are *not* used in data anymore. There are 4 types of codes, all with a 0xFF0000XY format. The embedded synchronization codes are supported only in 8-bit parallel data width capture (in the DCMI_CR register, the EDM[1:0] bits should be cleared). For other data widths, this mode generates unpredictable results and must not be used.

Note: Camera modules can have 8 such codes (in interleaved mode). For this reason, the interleaved mode is not supported by the camera interface (otherwise, every other half-frame would be discarded).

- Mode 2

  Four embedded codes signal the following events
  - Frame start (FS)
  - Frame end (FE)
  - Line start (LS)
  - Line end (LE)

  The XY values in the 0xFF0000XY format of the four codes are programmable (see *Section 20.5.7: DCMI embedded synchronization code register (DCMI_ESCR)*).

  A 0xFF value programmed as a “frame end” means that all the unused codes are interpreted as valid frame end codes.

  In this mode, once the camera interface has been enabled, the frame capture starts after the first occurrence of the frame end (FE) code followed by a frame start (FS) code.
- Mode 1

  An alternative coding is the camera mode 1. This mode is ITU656 compatible.

  The codes signal another set of events:
  - SAV (active line) - line start
  - EAV (active line) - line end
  - SAV (blanking) - end of line during interframe blanking period
  - EAV (blanking) - end of line during interframe blanking period

This mode can be supported by programming the following codes:

- FS ≤ 0xFF
- FE ≤ 0xFF
- LS ≤ SAV (active)
- LE ≤ EAV (active)

An embedded unmask code is also implemented for frame/line start and frame/line end codes. Using it, it is possible to compare only the selected unmasked bits with the programmed code. You can therefore select a bit to compare in the embedded code and

detect a frame/line start or frame/line end. This means that there can be different codes for the frame/line start and frame/line end with the unmasked bit position remaining the same.

Example

FS = 0xA5

Unmask code for FS = 0x10

In this case the frame start code is embedded in the bit 4 of the frame start code.

20.3.7 DCMI capture modes

This interface supports two types of capture: snapshot (single frame) and continuous grab.

Snapshot mode (single frame)

In this mode, a single frame is captured (CM = 1 of the DCMI_CR register). After the CAPTURE bit is set in DCMI_CR, the interface waits for the detection of a start of frame before sampling the data. The camera interface is automatically disabled (CAPTURE bit cleared in DCMI_CR) after receiving the first complete frame. An interrupt is generated (IT_FRAME) if it is enabled.

In case of an overrun, the frame is lost and the CAPTURE bit is cleared.

Figure 150. Frame capture waveforms in snapshot mode

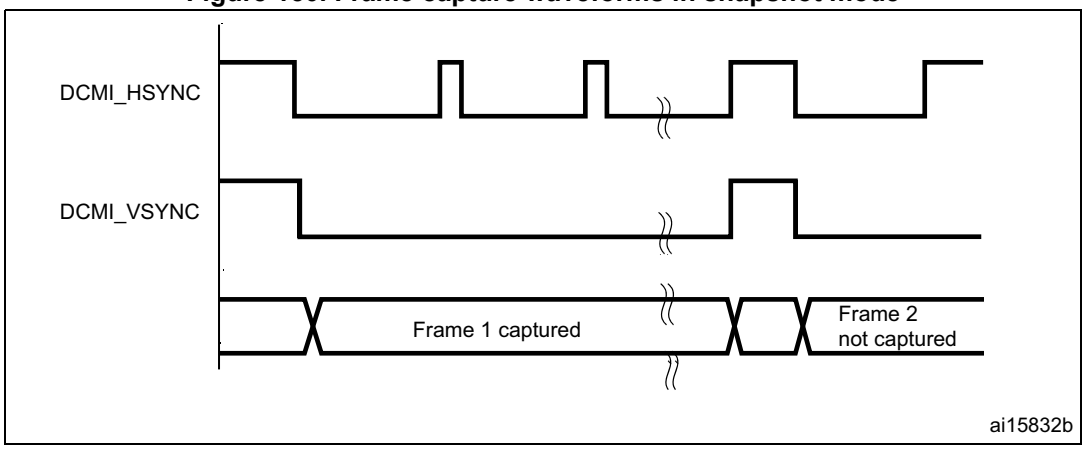

1. Here, the active state of DCMI_HSYNC and DCMI_VSYNC is 1.
2. DCMI_HSYNC and DCMI_VSYNC can change states at the same time.

Continuous grab mode

In this mode (CM bit = 0 in DCMI_CR), once the CAPTURE bit has been set in DCMI_CR, the grabbing process starts on the next DCMI_VSYNC or embedded frame start depending on the mode. The process continues until the CAPTURE bit is cleared in DCMI_CR. Once the CAPTURE bit has been cleared, the grabbing process continues until the end of the current frame.

Figure 151. Frame capture waveforms in continuous grab mode

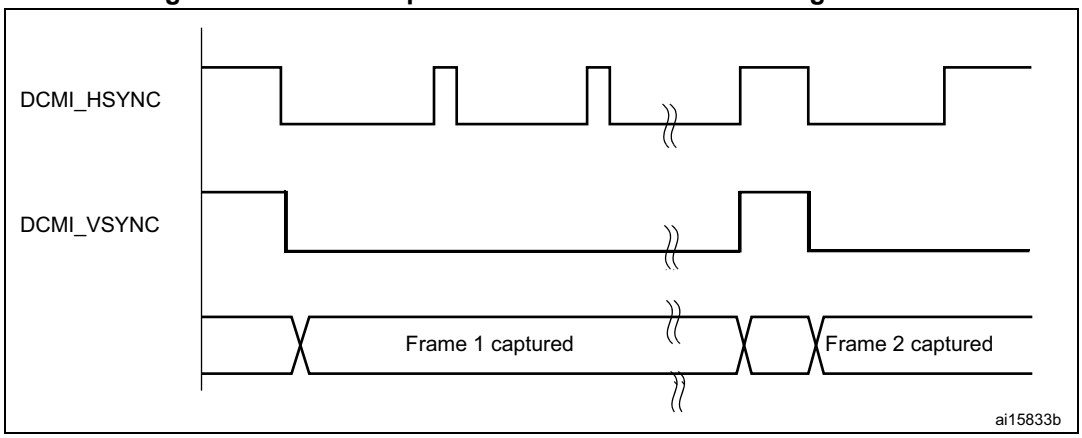

1. Here, the active state of DCMI_HSYNC and DCMI_VSYNC is 1.
2. DCMI_HSYNC and DCMI_VSYNC can change states at the same time.

In continuous grab mode, you can configure the FCRC bits in DCMI_CR to grab all pictures, every second picture or one out of four pictures to decrease the frame capture rate.

Note: In the hardware synchronization mode (ESS = 0 in DCMI_CR), the IT_VSYNC interrupt is generated (if enabled) even when CAPTURE = 0 in DCMI_CR so, to reduce the frame capture rate even further, the IT_VSYNC interrupt can be used to count the number of frames between 2 captures in conjunction with the Snapshot mode. This is not allowed by embedded data synchronization mode.

20.3.8 DCMI crop feature

With the crop feature, the camera interface can select a rectangular window from the received image. The start (upper left corner) coordinates and size (horizontal dimension in number of pixel clocks and vertical dimension in number of lines) are specified using two 32-bit registers (DCMI_CWSTRT and DCMI_CWSIZE). The size of the window is specified in number of pixel clocks (horizontal dimension) and in number of lines (vertical dimension).

Figure 152. Coordinates and size of the window after cropping

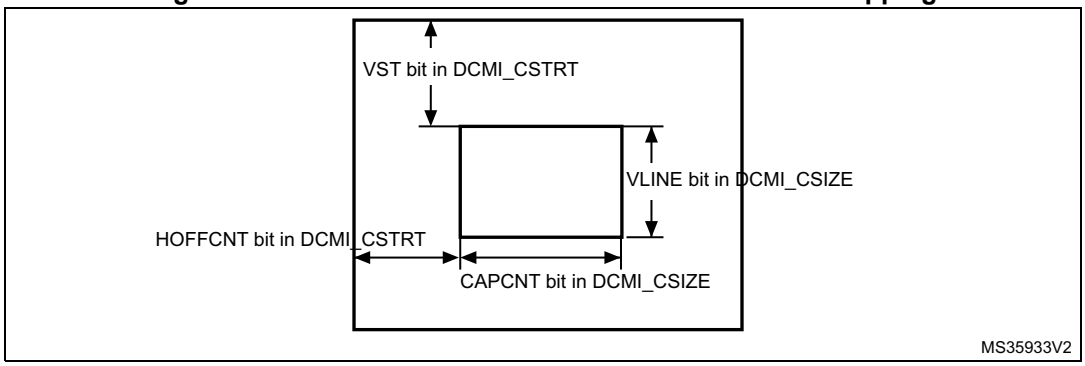

These registers specify the coordinates of the starting point of the capture window as a line number (in the frame, starting from 0) and a number of pixel clocks (on the line, starting from 0), and the size of the window as a line number and a number of pixel clocks. The CAPCNT value can only be a multiple of 4 (two least significant bits are forced to 0) to allow the correct transfer of data through the DMA.

If the DCMI_VSYNC signal goes active before the number of lines is specified in the DCMI_CWSIZE register, then the capture stops and an IT_FRAME interrupt is generated when enabled.

Figure 153. Data capture waveforms

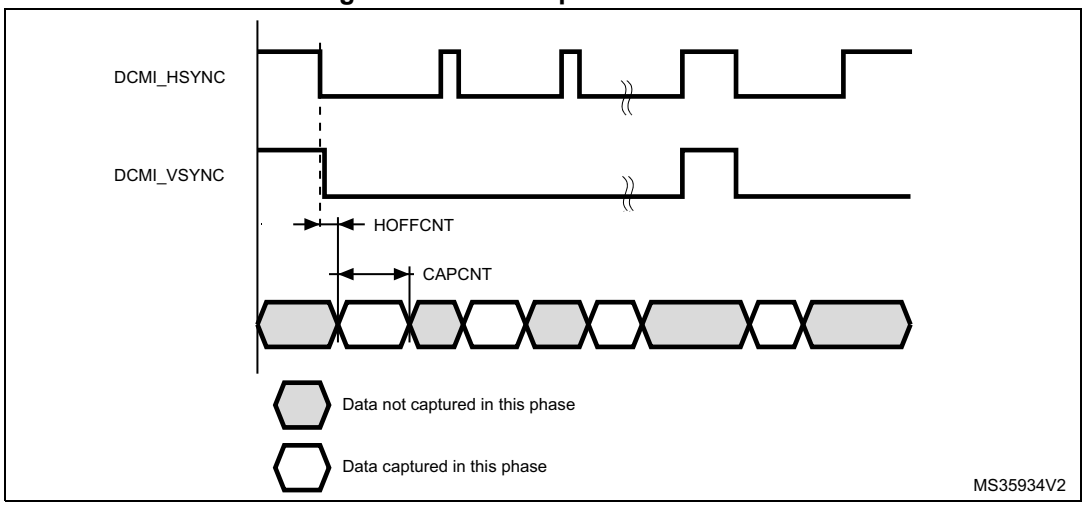

1. Here, the active state of DCMI_HSYNC and DCMI_VSYNC is 1.
2. DCMI_HSYNC and DCMI_VSYNC can change states at the same time.

20.3.9 DCMI JPEG format

To allow JPEG image reception, it is necessary to set the JPEG bit of the DCMI_CR register. JPEG images are not stored as lines and frames, so the DCMI_VSYNC signal is used to start the capture while DCMI_HSYNC serves as a data enable signal. The number of bytes in a line may not be a multiple of 4, you should therefore be careful when handling this case since a DMA request is generated each time a complete 32-bit word has been constructed from the captured data. When an end of frame is detected and the 32-bit word to be transferred has not been completely received, the remaining data are padded with zeros and a DMA request is generated.

The crop feature and embedded synchronization codes cannot be used in JPEG format.

20.3.10 DCMI FIFO

Input mode

A four-word FIFO is implemented to manage data rate transfers on the AHB. The DCMI features a simple FIFO controller with a read pointer incremented each time the camera interface reads from the AHB, and a write pointer incremented each time the camera interface writes to the FIFO. There is no overrun protection to prevent the data from being overwritten if the AHB interface does not sustain the data transfer rate.

In case of overrun or errors in the synchronization signals, the FIFO is reset and the DCMI interface waits for a new start of frame.

20.3.11 DCMI data format description

Data formats

Three types of data are supported:

- 8/10/12/14-bit progressive video: either monochrome or raw Bayer format
- YCbCr 4:2:2 progressive video
- RGB565 progressive video. A pixel coded in 16 bits (5 bits for blue, 5 bits for red, 6 bits for green) takes two clock cycles to be transferred.

Compressed data: JPEG

For B&W, YCbCr or RGB data, the maximum input size is 2048 × 2048 pixels. No limit in JPEG compressed mode.

For monochrome, RGB & YCbCr, the frame buffer is stored in raster mode. 32-bit words are used. Only the little endian format is supported.

Figure 154. Pixel raster scan order

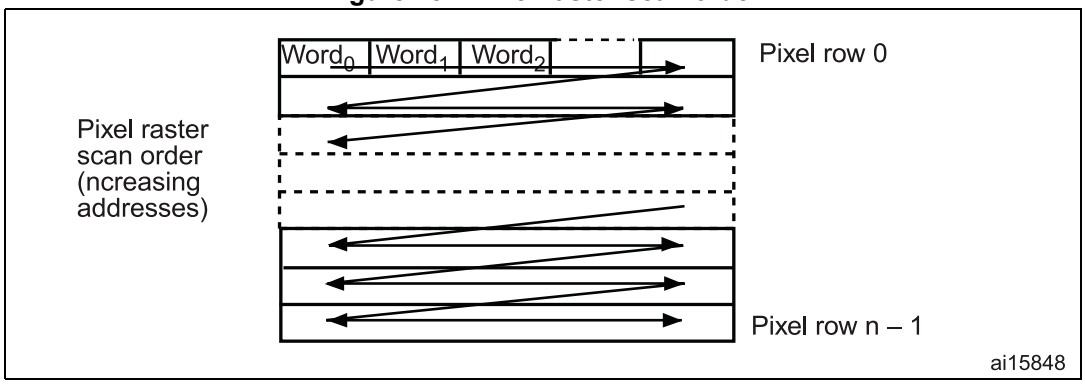

Monochrome format

Characteristics:

- Raster format
- 8 bits per pixel

Table 135 shows how the data are stored.

Table 135. Data storage in monochrome progressive video format

Byte address	31:24	23:16	15:8	7:0
0	n + 3	n + 2	n + 1	n
4	n + 7	n + 6	n + 5	n + 4

RGB format

Characteristics:

- Raster format
- RGB
- Interleaved: one buffer: R, G & B interleaved: BRGBRGBRG, etc.
- Optimized for display output

The RGB planar format is compatible with standard OS frame buffer display formats.
Only 16 BPP (bits per pixel): RGB565 (2 pixels per 32-bit word) is supported.
The 24 BPP (palletized format) and grayscale formats are not supported. Pixels are stored in a raster scan order, that is from top to bottom for pixel rows, and from left to right within a pixel row. Pixel components are R (red), G (green) and B (blue). All components have the same spatial resolution (4:4:4 format). A frame is stored in a single part, with the components interleaved on a pixel basis.

Table 136 shows how the data are stored.

Table 136. Data storage in RGB progressive video format

Byte address	31:27	26:21	20:16	15:11	10:5	4:0
0	Red n + 1	Green n + 1	Blue n + 1	Red n	Green n	Blue n
4	Red n + 4	Green n + 3	Blue n + 3	Red n + 2	Green n + 2	Blue n + 2

YCbCr format

Characteristics:

- Raster format
- YCbCr 4:2:2
- Interleaved: one Buffer: Y, Cb & Cr interleaved: CbYCrYCbYCr, etc.

Pixel components are Y (luminance or “luma”), Cb and Cr (chrominance or “chroma” blue and red). Each component is encoded in 8 bits. Luma and chroma are stored together (interleaved) as shown in *Table 137*.

Table 137. Data storage in YCbCr progressive video format

Byte address	31:24	23:16	15:8	7:0
0	Y n + 1	Cr n	Y n	Cb n
4	Y n + 3	Cr n + 2	Y n + 2	Cb n + 2

YCbCr format - Y only

Characteristics:

- Raster format
- YCbCr 4:2:2
- The buffer only contains Y information - monochrome image

Pixel components are Y (luminance or “luma”), Cb and Cr (chrominance or “chroma” blue and red). In this mode, the chroma information is dropped. Only Luma component of each pixel , encoded in 8 bits, is stored as shown in *Table 138*.

The result is a monochrome image having the same resolution as the original YCbCr data.

Table 138. Data storage in YCbCr progressive video format - Y extraction mode

Byte address	31:24	23:16	15:8	7:0
0	Y n + 3	Y n + 2	Y n + 1	Y n
4	Y n + 7	Y n + 6	Y n + 5	Y n + 4

Half resolution image extraction

This is a modification of the previous reception modes, being applicable to monochrome, RGB or Y extraction modes.

This mode allows to only store a half resolution image. It is selected through OELS and LSM control bits.

20.4 DCMI interrupts

Five interrupts are generated. All interrupts are maskable by software. The global interrupt (IT_DCMI) is the OR of all the individual interrupts. *Table 139* gives the list of all interrupts.

Table 139. DCMI interrupts

Interrupt acronym	Interrupt event	Event flag	Enable control bit	Interrupt clear method	Exits Sleep mode	Exists Stop and Standby mode
DCMI_IT	End of line	LINE_RIS	LINE_IE	Set LINE_ISC	Yes	No
	End of frame capture	FRAME_RIS	FRAME_IE	Set FRAME_ISC	Yes	No
	Overrun of data reception	OVR_RIS	OVR_IE	Set OVR_ISC	Yes	No
	Synchronization frame	VSYNC_RIS	VSYNC_IE	Set VSYNC_ISC	Yes	No
	Detection of an error in the embedded synchronization frame detection	ERR_RIS	ERR_IE	Set ERR_ISC	Yes	No

20.5 DCMI registers

Refer to *Section 1.2 on page 69* for list of abbreviations used in register descriptions. All DCMI registers must be accessed as 32-bit words, otherwise a bus error occurs.

20.5.1 DCMI control register (DCMI_CR)

Address offset: 0x00

Reset value: 0x0000 0000

31	30	29	28	27	26	25	24	23	22	21	20	19	18	17	16
Res.	Res.	Res.	Res.	Res.	Res.	Res.	Res.	Res.	Res.	Res.	OELS	LSM	OEBS	BSM[1:0]	
											rw	rw	rw	rw	rw

15	14	13	12	11	10	9	8	7	6	5	4	3	2	1	0
Res.	ENABLE	Res.	Res.	EDM[1:0]		FCRC[1:0]		VSPOL	HSPOL	PCKPOL	ESS	JPEG	CROP	CM	CAPTURE
	rw			rw	rw	rw	rw	rw	rw	rw	rw	rw	rw	rw	rw

Bits 31:21 Reserved, must be kept at reset value.

Bit 20 **OELS:** Odd/Even Line Select (Line Select Start)

This bit works in conjunction with LSM field (LSM = 1)

0: Interface captures first line after the frame start, second one being dropped

1: Interface captures second line from the frame start, first one being dropped

Bit 19 **LSM:** Line Select mode

0: Interface captures all received lines

1: Interface captures one line out of two.

Bit 18 **OEBS:** Odd/Even Byte Select (Byte Select Start)

This bit works in conjunction with BSM field (BSM <> 00)

0: Interface captures first data (byte or double byte) from the frame/line start, second one being dropped

1: Interface captures second data (byte or double byte) from the frame/line start, first one being dropped

Bits 17:16 **BSM[1:0]:** Byte Select mode

00: Interface captures all received data

01: Interface captures every other byte from the received data

10: Interface captures one byte out of four

11: Interface captures two bytes out of four

Note: This mode only work for EDM[1:0]=00. For all other EDM values, this bit field must be programmed to the reset value.

Bit 15 Reserved, must be kept at reset value.

Bit 14 **ENABLE:** DCMI enable

0: DCMI disabled

1: DCMI enabled

Note: The DCMI configuration registers should be programmed correctly before enabling this Bit

Bits 13:12 Reserved, must be kept at reset value.

Bits 11:10 **EDM[1:0]:** Extended data mode

00: Interface captures 8-bit data on every pixel clock

01: Interface captures 10-bit data on every pixel clock

10: Interface captures 12-bit data on every pixel clock

11: Interface captures 14-bit data on every pixel clock

Bits 9:8 **FCRC[1:0]:** Frame capture rate control

These bits define the frequency of frame capture. They are meaningful only in Continuous grab mode. They are ignored in snapshot mode.

00: All frames are captured

01: Every alternate frame captured (50% bandwidth reduction)

10: One frame in 4 frames captured (75% bandwidth reduction)

11: reserved

Bit 7 **VSPOL:** Vertical synchronization polarity

This bit indicates the level on the DCMI_VSYNC pin when the data are not valid on the parallel interface.

0: DCMI_VSYNC active low

1: DCMI_VSYNC active high

Bit 6 **HSPOL:** Horizontal synchronization polarity

This bit indicates the level on the DCMI_HSYNC pin when the data are not valid on the parallel interface.

0: DCMI_HSYNC active low

1: DCMI_HSYNC active high

Bit 5 **PCKPOL:** Pixel clock polarity

This bit configures the capture edge of the pixel clock

0: Falling edge active.

1: Rising edge active.

Bit 4 **ESS:** Embedded synchronization select

0: Hardware synchronization data capture (frame/line start/stop) is synchronized with the DCMI_HSYNC/DCMI_VSYNC signals.

1: Embedded synchronization data capture is synchronized with synchronization codes embedded in the data flow.

Note: Valid only for 8-bit parallel data. HSPOL/VSPOL are ignored when the ESS bit is set.

This bit is disabled in JPEG mode.

Bit 3 **JPEG:** JPEG format

0: Uncompressed video format

1: This bit is used for JPEG data transfers. The DCMI_HSYNC signal is used as data enable. The crop and embedded synchronization features (ESS bit) cannot be used in this mode.

Bit 2 **CROP:** Crop feature

0: The full image is captured. In this case the total number of bytes in an image frame should be a multiple of 4

1: Only the data inside the window specified by the crop register will be captured. If the size of the crop window exceeds the picture size, then only the picture size is captured.

Bit 1 **CM:** Capture mode

0: Continuous grab mode - The received data are transferred into the destination memory through the DMA. The buffer location and mode (linear or circular buffer) is controlled through the system DMA.

1: Snapshot mode (single frame) - Once activated, the interface waits for the start of frame and then transfers a single frame through the DMA. At the end of the frame, the CAPTURE bit is automatically reset.

Bit 0 **CAPTURE:** Capture enable

0: Capture disabled.

1: Capture enabled.

The camera interface waits for the first start of frame, then a DMA request is generated to transfer the received data into the destination memory.

In snapshot mode, the CAPTURE bit is automatically cleared at the end of the 1st frame received.

In continuous grab mode, if the software clears this bit while a capture is ongoing, the bit will be effectively cleared after the frame end.

Note: The DMA controller and all DCMI configuration registers should be programmed correctly before enabling this bit.

20.5.2 DCMI status register (DCMI_SR)

Address offset: 0x04

Reset value: 0x0000 0000

31	30	29	28	27	26	25	24	23	22	21	20	19	18	17	16
Res.	Res.	Res.	Res.	Res.	Res.	Res.	Res.	Res.	Res.	Res.	Res.	Res.	Res.	Res.	Res.

15	14	13	12	11	10	9	8	7	6	5	4	3	2	1	0
Res.	Res.	Res.	Res.	Res.	Res.	Res.	Res.	Res.	Res.	Res.	Res.	Res.	FNE	VSYNC	HSYNC
													r	r	r

Bits 31:3 Reserved, must be kept at reset value.

Bit 2 **FNE**: FIFO not empty

This bit gives the status of the FIFO

1: FIFO contains valid data

0: FIFO empty

Bit 1 **VSYNC**:

This bit gives the state of the DCMI_VSYNC pin with the correct programmed polarity.

When embedded synchronization codes are used, the meaning of this bit is the following:

0: active frame

1: synchronization between frames

In case of embedded synchronization, this bit is meaningful only if the CAPTURE bit in DCMI_CR is set.

Bit 0 **HSYNC**:

This bit gives the state of the DCMI_HSYNC pin with the correct programmed polarity.

When embedded synchronization codes are used, the meaning of this bit is the following:

0: active line

1: synchronization between lines

In case of embedded synchronization, this bit is meaningful only if the CAPTURE bit in DCMI_CR is set.

20.5.3 DCMI raw interrupt status register (DCMI_RIS)

Address offset: 0x08

Reset value: 0x0000 0000

31	30	29	28	27	26	25	24	23	22	21	20	19	18	17	16
Res.	Res.	Res.	Res.	Res.	Res.	Res.	Res.	Res.	Res.	Res.	Res.	Res.	Res.	Res.	Res.

15	14	13	12	11	10	9	8	7	6	5	4	3	2	1	0
Res.	Res.	Res.	Res.	Res.	Res.	Res.	Res.	Res.	Res.	Res.	LINE_RIS	VSYNC_RIS	ERR_RIS	OVR_RIS	FRAME_RIS
											r	r	r	r	r

DCMI_RIS gives the raw interrupt status and is accessible in read only. When read, this register returns the status of the corresponding interrupt before masking with the DCMI_IER register value.

Bits 31:5 Reserved, must be kept at reset value.

Bit 4 **LINE_RIS**: Line raw interrupt status

This bit gets set when the DCMI_HSYNC signal changes from the inactive state to the active state. It goes high even if the line is not valid.

In the case of embedded synchronization, this bit is set only if the CAPTURE bit in DCMI_CR is set.

It is cleared by setting the LINE_ISC bit of the DCMI_ICR register.

Bit 3 **VSYNC_RIS**: DCMI_VSYNC raw interrupt status

This bit is set when the DCMI_VSYNC signal changes from the inactive state to the active state.

In the case of embedded synchronization, this bit is set only if the CAPTURE bit is set in DCMI_CR.

It is cleared by setting the VSYNC_ISC bit of the DCMI_ICR register.

Bit 2 **ERR_RIS**: Synchronization error raw interrupt status

0: No synchronization error detected

1: Embedded synchronization characters are not received in the correct order.

This bit is valid only in the embedded synchronization mode. It is cleared by setting the ERR_ISC bit of the DCMI_ICR register.

Note: This bit is available only in embedded synchronization mode.

Bit 1 **OVR_RIS**:Overrun raw interrupt status

0: No data buffer overrun occurred

1: A data buffer overrun occurred and the data FIFO is corrupted.

The bit is cleared by setting the OVR_ISC bit of the DCMI_ICR register.

Bit 0 **FRAME_RIS**: Capture complete raw interrupt status

0: No new capture

1: A frame has been captured.

This bit is set when a frame or window has been captured.

In case of a cropped window, this bit is set at the end of line of the last line in the crop. It is set even if the captured frame is empty (e.g. window cropped outside the frame).

The bit is cleared by setting the FRAME_ISC bit of the DCMI_ICR register.

20.5.4 DCMI interrupt enable register (DCMI_IER)

Address offset: 0x0C

Reset value: 0x0000 0000

31	30	29	28	27	26	25	24	23	22	21	20	19	18	17	16
Res.	Res.	Res.	Res.	Res.	Res.	Res.	Res.	Res.	Res.	Res.	Res.	Res.	Res.	Res.	Res.

15	14	13	12	11	10	9	8	7	6	5	4	3	2	1	0
Res.	Res.	Res.	Res.	Res.	Res.	Res.	Res.	Res.	Res.	Res.	LINE _IE	VSYNC _IE	ERR _IE	OVR _IE	FRAME _IE
											rw	rw	rw	rw	rw

The DCMI_IER register is used to enable interrupts. When one of the DCMI_IER bits is set, the corresponding interrupt is enabled. This register is accessible in both read and write.

Bits 31:5 Reserved, must be kept at reset value.

Bit 4 **LINE_IE**: Line interrupt enable

0: No interrupt generation when the line is received
1: An Interrupt is generated when a line has been completely received

Bit 3 **VSYNC_IE**: DCMI_VSYNC interrupt enable

0: No interrupt generation
1: An interrupt is generated on each DCMI_VSYNC transition from the inactive to the active state
The active state of the DCMI_VSYNC signal is defined by the VSPOL bit.

Bit 2 **ERR_IE**: Synchronization error interrupt enable

0: No interrupt generation
1: An interrupt is generated if the embedded synchronization codes are not received in the correct order.

Note: This bit is available only in embedded synchronization mode.

Bit 1 **OVR_IE**: Overrun interrupt enable

0: No interrupt generation
1: An interrupt is generated if the DMA was not able to transfer the last data before new data (32-bit) are received.

Bit 0 **FRAME_IE**: Capture complete interrupt enable

0: No interrupt generation
1: An interrupt is generated at the end of each received frame/crop window (in crop mode).

20.5.5 DCMI masked interrupt status register (DCMI_MIS)

This DCMI_MIS register is a read-only register. When read, it returns the current masked status value (depending on the value in DCMI_IER) of the corresponding interrupt. A bit in this register is set if the corresponding enable bit in DCMI_IER is set and the corresponding bit in DCMI_RIS is set.

Address offset: 0x10

Reset value: 0x0000 0000

31	30	29	28	27	26	25	24	23	22	21	20	19	18	17	16
Res.	Res.	Res.	Res.	Res.	Res.	Res.	Res.	Res.	Res.	Res.	Res.	Res.	Res.	Res.	Res.

15	14	13	12	11	10	9	8	7	6	5	4	3	2	1	0
Res.	Res.	Res.	Res.	Res.	Res.	Res.	Res.	Res.	Res.	Res.	LINE _MIS	VSYNC _MIS	ERR _MIS	OVR _MIS	FRAME _MIS
											r	r	r	r	r

Bits 31:5 Reserved, must be kept at reset value.

Bit 4 **LINE_MIS**: Line masked interrupt status

This bit gives the status of the masked line interrupt

0: No interrupt generation when the line is received

1: An Interrupt is generated when a line has been completely received and the LINE_IE bit is set in DCMI_IER.

Bit 3 **VSYNC_MIS**: VSYNC masked interrupt status

This bit gives the status of the masked VSYNC interrupt

0: No interrupt is generated on DCMI_VSYNC transitions

1: An interrupt is generated on each DCMI_VSYNC transition from the inactive to the active state and the VSYNC_IE bit is set in DCMI_IER.

The active state of the DCMI_VSYNC signal is defined by the VSPOL bit.

Bit 2 **ERR_MIS**: Synchronization error masked interrupt status

This bit gives the status of the masked synchronization error interrupt

0: No interrupt is generated on a synchronization error

1: An interrupt is generated if the embedded synchronization codes are not received in the correct order and the ERR_IE bit in DCMI_IER is set.

Note: This bit is available only in embedded synchronization mode.

Bit 1 **OVR_MIS**: Overrun masked interrupt status

This bit gives the status of the masked overflow interrupt

0: No interrupt is generated on overrun

1: An interrupt is generated if the DMA was not able to transfer the last data before new data (32-bit) are received and the OVR_IE bit is set in DCMI_IER.

Bit 0 **FRAME_MIS**: Capture complete masked interrupt status

This bit gives the status of the masked capture complete interrupt

0: No interrupt is generated after a complete capture

1: An interrupt is generated at the end of each received frame/crop window (in crop mode) and the FRAME_IE bit is set in DCMI_IER.

20.5.6 DCMI interrupt clear register (DCMI_ICR)

Address offset: 0x14

Reset value: 0x0000 0000

31	30	29	28	27	26	25	24	23	22	21	20	19	18	17	16
Res.	Res.	Res.	Res.	Res.	Res.	Res.	Res.	Res.	Res.	Res.	Res.	Res.	Res.	Res.	Res.

15	14	13	12	11	10	9	8	7	6	5	4	3	2	1	0
Res.	Res.	Res.	Res.	Res.	Res.	Res.	Res.	Res.	Res.	Res.	LINE _ISC	VSYNC _ISC	ERR _ISC	OVR _ISC	FRAME _ISC
											w	w	w	w	w

The DCMI_ICR register is write-only. Setting a bit of this register clears the corresponding flag in the DCMI_RIS and DCMI_MIS registers. Writing 0 has no effect.

Bits 31:5 Reserved, must be kept at reset value.

Bit 4 **LINE_ISC**: line interrupt status clear
Setting this bit clears the LINE_RIS flag in the DCMI_RIS register

Bit 3 **VSYNC_ISC**: Vertical Synchronization interrupt status clear
Setting this bit clears the VSYNC_RIS flag in the DCMI_RIS register

Bit 2 **ERR_ISC**: Synchronization error interrupt status clear
Setting this bit clears the ERR_RIS flag in the DCMI_RIS register
Note: This bit is available only in embedded synchronization mode.

Bit 1 **OVR_ISC**: Overrun interrupt status clear
Setting this bit clears the OVR_RIS flag in the DCMI_RIS register

Bit 0 **FRAME_ISC**: Capture complete interrupt status clear
Setting this bit clears the FRAME_RIS flag in the DCMI_RIS register

20.5.7 DCMI embedded synchronization code register (DCMI_ESCR)

Address offset: 0x18

Reset value: 0x0000 0000

31	30	29	28	27	26	25	24	23	22	21	20	19	18	17	16
FEC[7:0]]								LEC[7:0]							
rw	rw	rw	rw	rw	rw	rw	rw	rw	rw	rw	rw	rw	rw	rw	rw
15	14	13	12	11	10	9	8	7	6	5	4	3	2	1	0
LSC[7:0]								FSC[7:0]							
rw	rw	rw	rw	rw	rw	rw	rw	rw	rw	rw	rw	rw	rw	rw	rw

Bits 31:24 **FEC[7:0]**: Frame end delimiter code

This byte specifies the code of the frame end delimiter. The code consists of 4 bytes in the form of 0xFF, 0x00, 0x00, FEC.

If FEC is programmed to 0xFF, all the unused codes (0xFF0000XY) are interpreted as frame end delimiters.

Bits 23:16 **LEC[7:0]**: Line end delimiter code

This byte specifies the code of the line end delimiter. The code consists of 4 bytes in the form of 0xFF, 0x00, 0x00, LEC.

Bits 15:8 **LSC[7:0]**: Line start delimiter code

This byte specifies the code of the line start delimiter. The code consists of 4 bytes in the form of 0xFF, 0x00, 0x00, LSC.

Bits 7:0 **FSC[7:0]**: Frame start delimiter code

This byte specifies the code of the frame start delimiter. The code consists of 4 bytes in the form of 0xFF, 0x00, 0x00, FSC.

If FSC is programmed to 0xFF, no frame start delimiter is detected. But, the 1st occurrence of LSC after an FEC code will be interpreted as a start of frame delimiter.

20.5.8 DCMI embedded synchronization unmask register (DCMI_ESUR)

Address offset: 0x1C

Reset value: 0x0000 0000

31	30	29	28	27	26	25	24	23	22	21	20	19	18	17	16
FEU[7:0]								LEU[7:0]							
rw	rw	rw	rw	rw	rw	rw	rw	rw	rw	rw	rw	rw	rw	rw	rw
15	14	13	12	11	10	9	8	7	6	5	4	3	2	1	0
LSU[7:0]								FSU[7:0]							
rw	rw	rw	rw	rw	rw	rw	rw	rw	rw	rw	rw	rw	rw	rw	rw

Bits 31:24 **FEU[7:0]**: Frame end delimiter unmask

This byte specifies the mask to be applied to the code of the frame end delimiter.

0: The corresponding bit in the FEC byte in DCMI_ESCR is masked while comparing the frame end delimiter with the received data.

1: The corresponding bit in the FEC byte in DCMI_ESCR is compared while comparing the frame end delimiter with the received data

Bits 23:16 **LEU[7:0]**: Line end delimiter unmask

This byte specifies the mask to be applied to the code of the line end delimiter.

0: The corresponding bit in the LEC byte in DCMI_ESCR is masked while comparing the line end delimiter with the received data

1: The corresponding bit in the LEC byte in DCMI_ESCR is compared while comparing the line end delimiter with the received data

Bits 15:8 **LSU[7:0]**: Line start delimiter unmask

This byte specifies the mask to be applied to the code of the line start delimiter.

0: The corresponding bit in the LSC byte in DCMI_ESCR is masked while comparing the line start delimiter with the received data

1: The corresponding bit in the LSC byte in DCMI_ESCR is compared while comparing the line start delimiter with the received data

Bits 7:0 **FSU[7:0]**: Frame start delimiter unmask

This byte specifies the mask to be applied to the code of the frame start delimiter.

0: The corresponding bit in the FSC byte in DCMI_ESCR is masked while comparing the frame start delimiter with the received data

1: The corresponding bit in the FSC byte in DCMI_ESCR is compared while comparing the frame start delimiter with the received data

20.5.9 DCMI crop window start (DCMI_CWSTRT)

Address offset: 0x20

Reset value: 0x0000 0000

31	30	29	28	27	26	25	24	23	22	21	20	19	18	17	16
Res.	Res.	Res.	VST[12:0]												
			rw	rw	rw	rw	rw	rw	rw	rw	rw	rw	rw	rw	rw
15	14	13	12	11	10	9	8	7	6	5	4	3	2	1	0
Res.	Res.	HOFFCNT[13:0]													
		rw	rw	rw	rw	rw	rw	rw	rw	rw	rw	rw	rw	rw	rw

Bits 31:29 Reserved, must be kept at reset value.

Bits 28:16 **VST[12:0]**: Vertical start line count

The image capture starts with this line number. Previous line data are ignored.
0x0000: line 1
0x0001: line 2
0x0002: line 3
....

Bits 15:14 Reserved, must be kept at reset value.

Bits 13:0 **HOFFCNT[13:0]**: Horizontal offset count

This value gives the number of pixel clocks to count before starting a capture.

20.5.10 DCMI crop window size (DCMI_CWSIZE)

Address offset: 0x24

Reset value: 0x0000 0000

31	30	29	28	27	26	25	24	23	22	21	20	19	18	17	16
Res.	Res.	VLINE[13:0]													
		rw	rw	rw	rw	rw	rw	rw	rw	rw	rw	rw	rw	rw	rw
15	14	13	12	11	10	9	8	7	6	5	4	3	2	1	0
Res.	Res.	CAPCNT[13:0]													
		rw	rw	rw	rw	rw	rw	rw	rw	rw	rw	rw	rw	rw	rw

Bits 31:30 Reserved, must be kept at reset value.

Bits 29:16 **VLINE[13:0]**: Vertical line count

This value gives the number of lines to be captured from the starting point.
0x0000: 1 line
0x0001: 2 lines
0x0002: 3 lines
....

Bits 15:14 Reserved, must be kept at reset value.

Bits 13:0 **CAPCNT[13:0]**: Capture count

This value gives the number of pixel clocks to be captured from the starting point on the same line. It value should corresponds to word-aligned data for different widths of parallel interfaces.

0x0000 => 1 pixel

0x0001 => 2 pixels

0x0002 => 3 pixels

....

20.5.11 DCMI data register (DCMI_DR)

Address offset: 0x28

Reset value: 0x0000 0000

31	30	29	28	27	26	25	24	23	22	21	20	19	18	17	16
BYTE3[7:0]								BYTE2[7:0]							
r	r	r	r	r	r	r	r	r	r	r	r	r	r	r	r
15	14	13	12	11	10	9	8	7	6	5	4	3	2	1	0
BYTE1[7:0]								BYTE0[7:0]							
r	r	r	r	r	r	r	r	r	r	r	r	r	r	r	r

Bits 31:24 **BYTE3[7:0]**: Data byte 3

Bits 23:16 **BYTE2[7:0]**: Data byte 2

Bits 15:8 **BYTE1[7:0]**: Data byte 1

Bits 7:0 **BYTE0[7:0]**: Data byte 0

The digital camera Interface packages all the received data in 32-bit format before requesting a DMA transfer. A 4-word deep FIFO is available to leave enough time for DMA transfers and avoid DMA overrun conditions.

20.5.12 DCMI register map

Table 140 summarizes the DCMI registers.

Table 140. DCMI register map and reset values

Offset	Register name	31	30	29	28	27	26	25	24	23	22	21	20	19	18	17	16	15	14	13	12	11	10	9	8	7	6	5	4	3	2	1	0
0x00	DCMI_CR	Res.	Res.	Res.	Res.	Res.	Res.	Res.	Res.	Res.	Res.	Res.	OELS	LSM	OEBS	BSM		Res.	ENABLE	Res.	Res.	EDM		FCRC		VSPOL	HSPOL	PCKPOL	ESS	JPEG	CROP	CM	CAPTURE
	Reset value												0	0	0	0	0		0			0	0	0	0	0	0	0	0	0	0	0	0
0x04	DCMI_SR	Res.	Res.	Res.	Res.	Res.	Res.	Res.	Res.	Res.	Res.	Res.	Res.	Res.	Res.	Res.	Res.	Res.	Res.	Res.	Res.	Res.	Res.	Res.	Res.	Res.	Res.	Res.	Res.	Res.	FNE	VSYNC	HSYNC
	Reset value																														0	0	0
0x08	DCMI_RIS	Res.	Res.	Res.	Res.	Res.	Res.	Res.	Res.	Res.	Res.	Res.	Res.	Res.	Res.	Res.	Res.	Res.	Res.	Res.	Res.	Res.	Res.	Res.	Res.	Res.	Res.	Res.	LINE_RIS	VSYNC_RIS	ERR_RIS	OVR_RIS	FRAME_RIS
	Reset value																												0	0	0	0	0
0x0C	DCMI_IER	Res.	Res.	Res.	Res.	Res.	Res.	Res.	Res.	Res.	Res.	Res.	Res.	Res.	Res.	Res.	Res.	Res.	Res.	Res.	Res.	Res.	Res.	Res.	Res.	Res.	Res.	Res.	LINE_IE	VSYNC_IE	ERR_IE	OVR_IE	FRAME_IE
	Reset value																												0	0	0	0	0
0x10	DCMI_MIS	Res.	Res.	Res.	Res.	Res.	Res.	Res.	Res.	Res.	Res.	Res.	Res.	Res.	Res.	Res.	Res.	Res.	Res.	Res.	Res.	Res.	Res.	Res.	Res.	Res.	Res.	Res.	LINE_MIS	VSYNC_MIS	ERR_MIS	OVR_MIS	FRAME_MIS
	Reset value																												0	0	0	0	0
0x14	DCMI_ICR	Res.	Res.	Res.	Res.	Res.	Res.	Res.	Res.	Res.	Res.	Res.	Res.	Res.	Res.	Res.	Res.	Res.	Res.	Res.	Res.	Res.	Res.	Res.	Res.	Res.	Res.	Res.	LINE_ISC	VSYNC_ISC	ERR_ISC	OVR_ISC	FRAME_ISC
	Reset value																												0	0	0	0	0
0x18	DCMI_ESCR	FEC[7:0]								LEC[7:0]								LSC[7:0]								FSC[7:0]							
	Reset value	0	0	0	0	0	0	0	0	0	0	0	0	0	0	0	0	0	0	0	0	0	0	0	0	0	0	0	0	0	0	0	0
0x1C	DCMI_ESUR	FEU[7:0]								LEU[7:0]								LSU[7:0]								FSU[7:0]							
	Reset value	0	0	0	0	0	0	0	0	0	0	0	0	0	0	0	0	0	0	0	0	0	0	0	0	0	0	0	0	0	0	0	0
0x20	DCMI_CWSTRT	Res.	Res.	Res.	VST[12:0]													Res.	Res.	HOFFCNT[13:0]													
	Reset value				0	0	0	0	0	0	0	0	0	0	0	0	0			0	0	0	0	0	0	0	0	0	0	0	0	0	0
0x24	DCMI_CWSIZE	Res.	Res.	VLINE[13:0]														Res.	Res.	CAPCNT[13:0]													
	Reset value			0	0	0	0	0	0	0	0	0	0	0	0	0	0			0	0	0	0	0	0	0	0	0	0	0	0	0	0
0x28	DCMI_DR	BYTE3								BYTE2								BYTE1								BYTE0							
	Reset value	0	0	0	0	0	0	0	0	0	0	0	0	0	0	0	0	0	0	0	0	0	0	0	0	0	0	0	0	0	0	0	0
0x2C - 0x3EF	Reserved																																

Refer to *Section 2.2 on page 75* for the register boundary addresses.

21 Voltage reference buffer (VREFBUF)

21.1 Introduction

The devices embed a voltage reference buffer which can be used as voltage reference for ADCs, DACs and also as voltage reference for external components through the VREF+ pin. When the VREF+ pin is double-bonded with VDDA pin in a package, the voltage reference buffer is not available and must be kept disabled (refer to datasheet for packages pinout description).

21.2 VREFBUF functional description

The internal voltage reference buffer supports two voltages[(a)], which are configured with VRS bits in the VREFBUF_CSR register:

- VRS = 0: V_{REF_OUT1} around 2.048 V.
- VRS = 1: V_{REF_OUT2} around 2.5 V.

The internal voltage reference can be configured in four different modes depending on ENVR and HIZ bits configuration. These modes are provided in the table below:

Table 141. VREF buffer modes

ENVR	HIZ	VREF buffer configuration
0	0	VREFBUF buffer off: – V_{REF+} pin pulled-down to V_{SSA}
0	1	External voltage reference mode (default value): – VREFBUF buffer off – V_{REF+} pin input mode
1	0	Internal voltage reference mode: – VREFBUF buffer ON – V_{REF+} pin connected to VREFBUF buffer output
1	1	Hold mode: – VREFBUF buffer off – V_{REF+} pin floating. The voltage is held with the external capacitor – VRR detection disabled and VRR bit keeps last state

After enabling the VREFBUF by setting ENVR bit and clearing HIZ bit in the VREFBUF_CSR register, the user must wait until VRR bit is set, meaning that the voltage reference output has reached its expected value.

a. The minimum V_{DDA} voltage depends on VRS setting, refer to the product datasheet.

21.3 VREFBUF trimming

For VRS = 1 setting, the VREFBUF output voltage is factory-calibrated by ST. The calibration data is automatically loaded to the TRIM register at reset.

For VRS = 0 setting, the calibration data is not available. The user can trim the output voltage by changing the TRIM register bits.

21.4 VREFBUF registers

21.4.1 VREFBUF control and status register (VREFBUF_CSR)

Address offset: 0x00

Reset value: 0x0000 0002

31	30	29	28	27	26	25	24	23	22	21	20	19	18	17	16
Res.	Res.	Res.	Res.	Res.	Res.	Res.	Res.	Res.	Res.	Res.	Res.	Res.	Res.	Res.	Res.

15	14	13	12	11	10	9	8	7	6	5	4	3	2	1	0
Res.	Res.	Res.	Res.	Res.	Res.	Res.	Res.	Res.	Res.	Res.	Res.	VRR	VRS	HIZ	ENVR
												r	rw	rw	rw

Bits 31:4 Reserved, must be kept at reset value.

Bit 3 **VRR:** Voltage reference buffer ready

0: the voltage reference buffer output is not ready.

1: the voltage reference buffer output reached the requested level.

Bit 2 **VRS**: Voltage reference scale

This bit selects the value generated by the voltage reference buffer.

0: Voltage reference set to V_{REF_OUT1} (around 2.048 V).

1: Voltage reference set to V_{REF_OUT2} (around 2.5 V).

Bit 1 **HIZ:** High impedance mode

This bit controls the analog switch to connect or not the V_{REF+} pin.

0: V_{REF+} pin is internally connected to the voltage reference buffer output.

1: V_{REF+} pin is high impedance.

Refer to *Table 141: VREF buffer modes* for the mode descriptions depending on ENVR bit configuration.

Bit 0 **ENVR:** Voltage reference buffer mode enable

This bit is used to enable the voltage reference buffer mode.

0: Internal voltage reference mode disable (external voltage reference mode).

1: Internal voltage reference mode (reference buffer enable or hold mode) enable.

21.4.2 VREFBUF calibration control register (VREFBUF_CCR)

Address offset: 0x04

Reset value: 0x0000 00XX

31	30	29	28	27	26	25	24	23	22	21	20	19	18	17	16
Res.	Res.	Res.	Res.	Res.	Res.	Res.	Res.	Res.	Res.	Res.	Res.	Res.	Res.	Res.	Res.

15	14	13	12	11	10	9	8	7	6	5	4	3	2	1	0
Res.	Res.	Res.	Res.	Res.	Res.	Res.	Res.	Res.	Res.	TRIM[5:0]					
										rw	rw	rw	rw	rw	rw

Bits 31:6 Reserved, must be kept at reset value.

Bits 5:0 **TRIM[5:0]**: Trimming code

For VRS = 1 (2.5 V), these bits are automatically initialized after reset with the trimming value stored in the Flash memory during the production test. Writing into these bits allows the tuning of the internal reference buffer voltage. The TRIM code is a 6-bit unsigned format (minimum 000000, maximum 111111).

21.4.3 VREFBUF register map

The following table gives the VREFBUF register map and the reset values.

Table 142. VREFBUF register map and reset values

Offset	Register name	31	30	29	28	27	26	25	24	23	22	21	20	19	18	17	16	15	14	13	12	11	10	9	8	7	6	5	4	3	2	1	0
0x00	**VREFBUF_CSR**	Res.	Res.	Res.	Res.	Res.	Res.	Res.	Res.	Res.	Res.	Res.	Res.	Res.	Res.	Res.	Res.	Res.	Res.	Res.	Res.	Res.	Res.	Res.	Res.	Res.	Res.	Res.	Res.	VRR	VRS	HIZ	ENVR
	Reset value																													0	0	1	0
0x04	**VREFBUF_CCR**	Res.	Res.	Res.	Res.	Res.	Res.	Res.	Res.	Res.	Res.	Res.	Res.	Res.	Res.	Res.	Res.	Res.	Res.	Res.	Res.	Res.	Res.	Res.	Res.	Res.	Res.	TRIM[5:0]					
	Reset value																											x	x	x	x	x	x

Refer to *Section 2.2 on page 75* for the register boundary addresses.

22 Comparator (COMP)

22.1 Introduction

The device embeds two ultra-low-power comparators COMP1, and COMP2

The comparators can be used for a variety of functions including:

- Wakeup from low-power mode triggered by an analog signal,
- Analog signal conditioning,
- Cycle-by-cycle current control loop when combined with a PWM output from a timer.

22.2 COMP main features

- Each comparator has configurable plus and minus inputs used for flexible voltage selection:
  - Multiplexed I/O pins
  - DAC Channel1 and Channel2
  - Internal reference voltage and three submultiple values (1/4, 1/2, 3/4) provided by scaler (buffered voltage divider)
- Programmable hysteresis
- Programmable speed / consumption
- The outputs can be redirected to an I/O or to timer inputs for triggering:
  - Break events for fast PWM shutdowns
- Comparator outputs with blanking source
- The two comparators can be combined in a window comparator
- Each comparator has interrupt generation capability with wakeup from Sleep and Stop modes (through the EXTI controller)

22.3 COMP functional description

22.3.1 COMP block diagram

The block diagram of the comparators is shown in *Figure 155: Comparator block diagram*.

Figure 155. Comparator block diagram

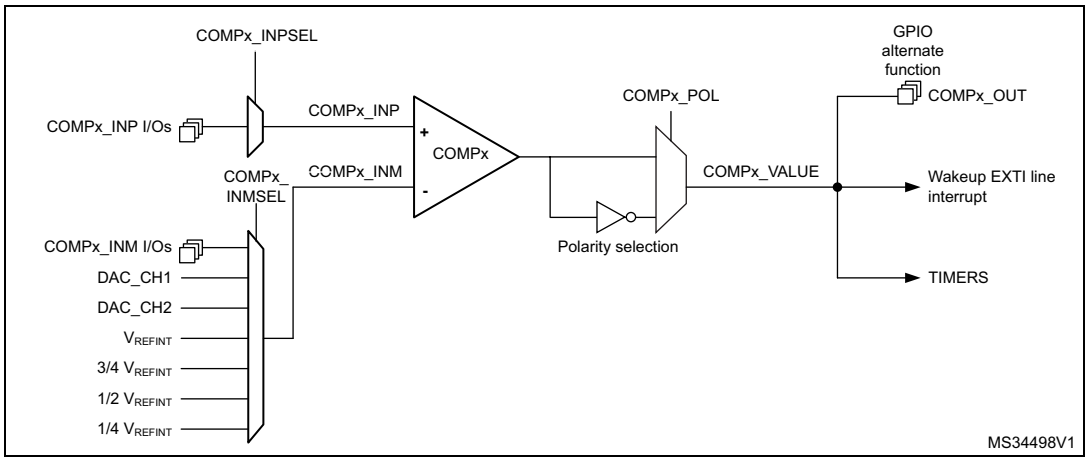

22.3.2 COMP pins and internal signals

The I/Os used as comparators inputs must be configured in analog mode in the GPIOs registers.

The comparator output can be connected to the I/Os using the alternate function channel given in “Alternate function mapping” table in the datasheet.

The output can also be internally redirected to a variety of timer input for the following purposes:

- Emergency shut-down of PWM signals, using BKIN and BKIN2 inputs
- Cycle-by-cycle current control, using OCREF_CLR inputs
- Input capture for timing measures

It is possible to have the comparator output simultaneously redirected internally and externally.

Table 143. COMP1 input plus assignment

COMP1_INP	COMP1_INPSEL
PC5	0
PB2	1

Table 144. COMP1 input minus assignment

COMP1_INM	COMP1_INMSEL[2:0]
¼ V_{REFINT}	000
½ V_{REFINT}	001

Table 144. COMP1 input minus assignment (continued)

COMP1_INM	COMP1_INMSEL[2:0]
¾ V_{REFINT}	010
V_{REFINT}	011
DAC Channel1	100
DAC Channel2	101
PB1	110
PC4	111

Table 145. COMP2 input plus assignment

COMP2_INP	COMP2_INPSEL
PB4	0
PB6	1

Table 146. COMP2 input minus assignment

COMP2_INM	COMP2_INMSEL[2:0]
¼ V_{REFINT}	000
½ V_{REFINT}	001
¾ V_{REFINT}	010
V_{REFINT}	011
DAC Channel1	100
DAC Channel2	101
PB3	110
PB7	111

22.3.3 COMP reset and clocks

The COMP clock provided by the clock controller is synchronous with the APB2 clock.

There is no clock enable control bit provided in the RCC controller. Reset and clock enable bits are common for COMP and SYSCFG.

Important: The polarity selection logic and the output redirection to the port works independently from the APB2 clock. This allows the comparator to work even in Stop mode.

22.3.4 Comparator LOCK mechanism

The comparators can be used for safety purposes, such as over-current or thermal protection. For applications having specific functional safety requirements, it is necessary to insure that the comparator programming cannot be altered in case of spurious register access or program counter corruption.

For this purpose, the comparator control and status registers can be write-protected (read-only).

Once the programming is completed, the COMPx LOCK bit can be set to 1. This causes the whole register to become read-only, including the COMPx LOCK bit.

The write protection can only be reset by a MCU reset.

22.3.5 Window comparator

The purpose of window comparator is to monitor the analog voltage if it is within specified voltage range defined by lower and upper threshold.

Two embedded comparators can be utilized to create window comparator. The monitored analog voltage is connected to the non-inverting (plus) inputs of comparators connected together and the upper and lower threshold voltages are connected to the inverting (minus) inputs of the comparators. Two non-inverting inputs can be connected internally together by enabling WINMODE bit to save one IO for other purposes.

Figure 156. Window mode

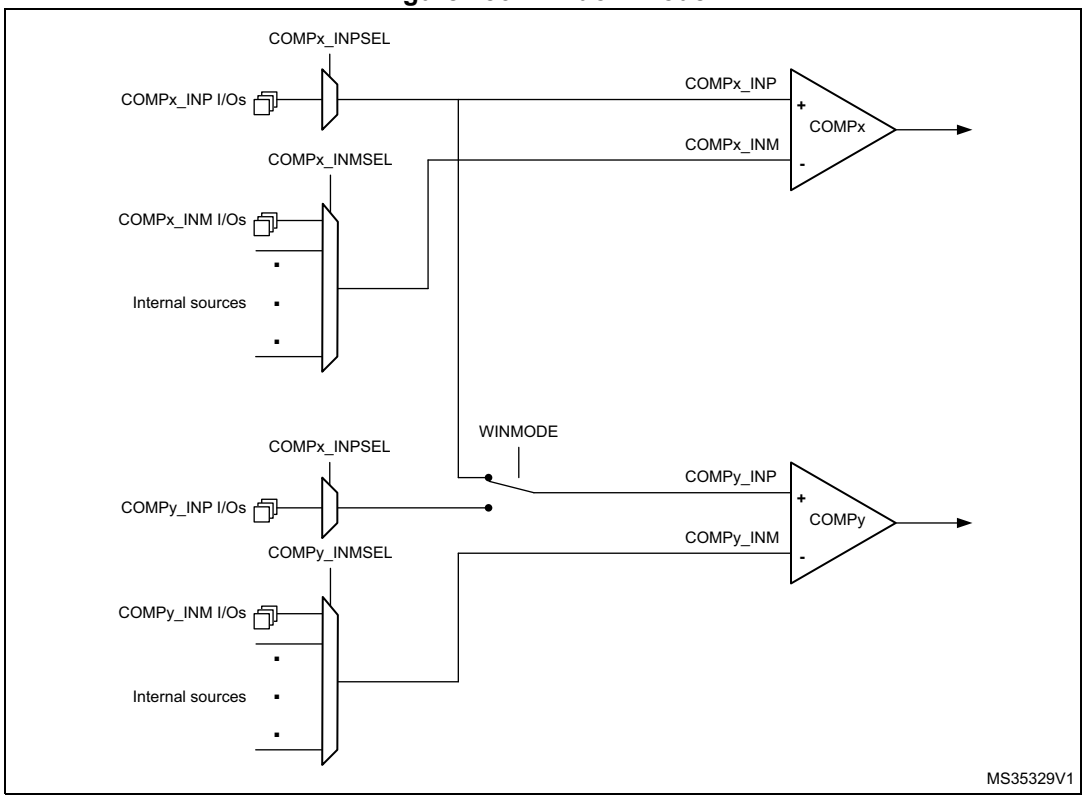

22.3.6 Hysteresis

The comparator includes a programmable hysteresis to avoid spurious output transitions in case of noisy signals. The hysteresis can be disabled if it is not needed (for instance when exiting from low-power mode) to be able to force the hysteresis value using external components.

Figure 157. Comparator hysteresis

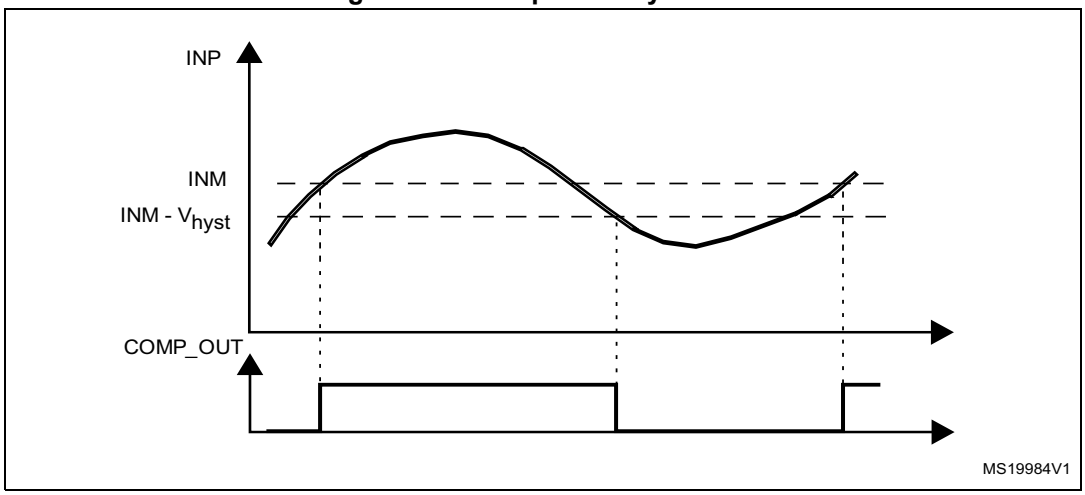

22.3.7 Comparator output blanking function

The purpose of the blanking function is to prevent the current regulation to trip upon short current spikes at the beginning of the PWM period (typically the recovery current in power switches anti parallel diodes).It consists of a selection of a blanking window which is a timer output compare signal. The selection is done by software (refer to the comparator register description for possible blanking signals). Then, the complementary of the blanking signal is ANDed with the comparator output to provide the wanted comparator output. See the example provided in the figure below.

Figure 158. Comparator output blanking

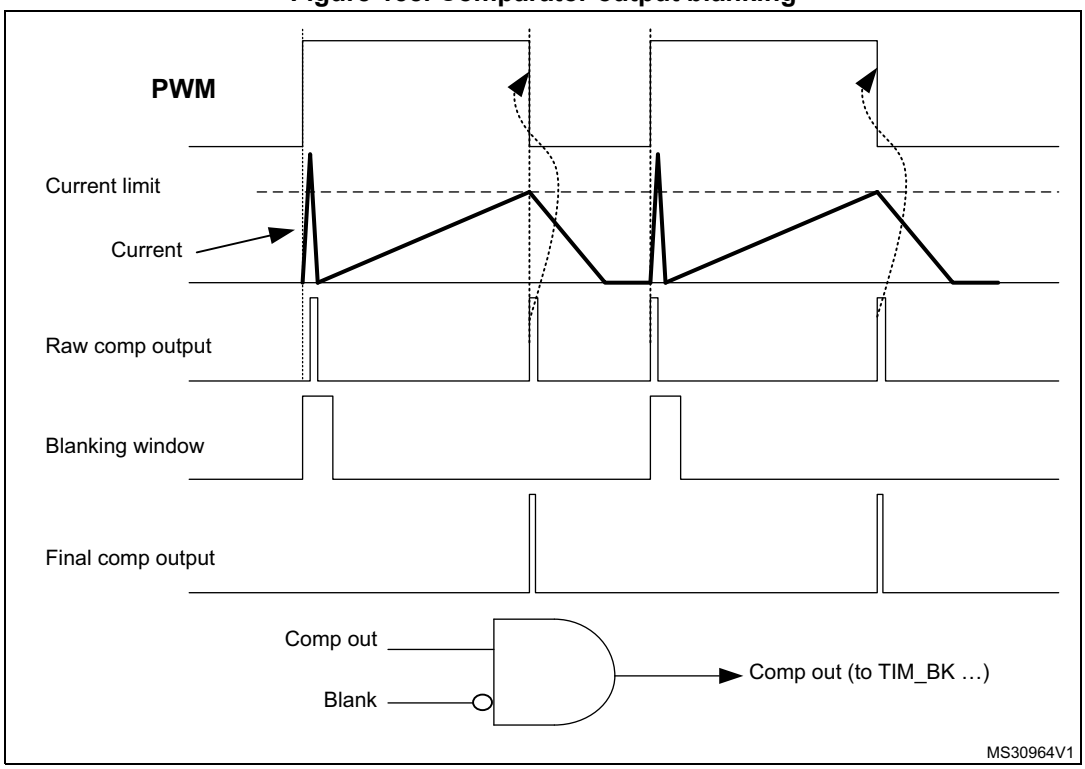

22.3.8 COMP power and speed modes

COMP1 and COMP2 power consumption versus propagation delay can be adjusted to have the optimum trade-off for a given application.

The bits PWRMODE[1:0] in COMPx_CSR registers can be programmed as follows:

00: High speed / full power

01 or 10: Medium speed / medium power

11: Low speed / ultra-low-power

22.4 COMP low-power modes

Table 147. Comparator behavior in the low power modes

Mode	Description
Sleep	No effect on the comparators. Comparator interrupts cause the device to exit the Sleep mode.
Low-power run	No effect.
Low-power sleep	No effect. COMP interrupts cause the device to exit the Low-power sleep mode.
Stop 0	No effect on the comparators. Comparator interrupts cause the device to exit the Stop mode.
Stop 1	
Stop 2	
Standby	The COMP registers are powered down and must be reinitialized after exiting Standby or Shutdown mode.
Shutdown	

22.5 COMP interrupts

The comparator outputs are internally connected to the Extended interrupts and events controller. Each comparator has its own EXTI line and can generate either interrupts or events. The same mechanism is used to exit from low-power modes.

Refer to Interrupt and events section for more details.

To enable COMPx interrupt, it is required to follow this sequence:

1. Configure and enable the EXTI line corresponding to the COMPx output event in interrupt mode and select the rising, falling or both edges sensitivity
2. Configure and enable the NVIC IRQ channel mapped to the corresponding EXTI lines
3. Enable COMPx.

Table 148. Interrupt control bits

Interrupt event	Event flag	Enable control bit	Exit from Sleep mode	Exit from Stop modes	Exit from Standby mode
COMP1 output	VALUE in COMP1_CSR	through EXTI	yes	yes	N/A
COMP2 output	VALUE in COMP2_CSR	through EXTI	yes	yes	N/A

22.6 COMP registers

22.6.1 Comparator 1 control and status register (COMP1_CSR)

The COMP1_CSR is the Comparator 1 control/status register. It contains all the bits /flags related to comparator1.

Address offset: 0x00

System reset value: 0x0000 0000

31	30	29	28	27	26	25	24	23	22	21	20	19	18	17	16
LOCK	VALUE	Res.	Res.	Res.	Res.	Res.	Res.	SCAL EN	BRG EN	Res.	BLANKING			HYST	
rs	r							rw	rw		rw			rw	

15	14	13	12	11	10	9	8	7	6	5	4	3	2	1	0
POLA RITY	Res.	Res.	Res.	Res.	Res.	Res.	Res.	INP SEL.	INMSEL			PWRMODE		Res.	EN
rw								rw	rw			rw			rw

Bit 31 **LOCK:** COMP1_CSR register lock bit

This bit is set by software and cleared by a hardware system reset. It locks the whole content of the comparator 1 control register, COMP1_CSR[31:0].

0: COMP1_CSR[31:0] for comparator 1 are read/write

1: COMP1_CSR[31:0] for comparator 1 are read-only

Bit 30 **VALUE:** Comparator 1 output status bit

This bit is read-only. It reflects the current comparator 1 output taking into account POLARITY bit effect.

Bits 29: Reserved, must be kept at reset value.

Bit 23 **SCALEN**: Voltage scaler enable bit

This bit is set and cleared by software. This bit enable the outputs of the V_{REFINT} divider available on the minus input of the Comparator 1.

0: Bandgap scaler disable (if SCALEN bit of COMP2_CSR register is also reset)

1: Bandgap scaler enable

Bit 22 **BRGEN:** Scaler bridge enable

This bit is set and cleared by software (only if LOCK not set). This bit enable the bridge of the scaler.

0: Scaler resistor bridge disable (if BRGEN bit of COMP2_CSR register is also reset)

1: Scaler resistor bridge enable

If SCALEN is set and BRGEN is reset, BG voltage reference is available but not 1/4 BGAP, 1/2 BGAP, 3/4 BGAP. BGAP value is sent instead of 1/4 BGAP, 1/2 BGAP, 3/4 BGAP.

If SCALEN and BRGEN are set, 1/4 BGAP 1/2 BGAP 3/4 BGAP and BGAP voltage references are available.

Bit 21 Reserved, must be kept at reset value

Bits 20:18 **BLANKING[2:0]:** Comparator 1 blanking source selection bits

These bits select which timer output controls the comparator 1 output blanking.

000: No blanking

001: TIM1 OC5 selected as blanking source

010: TIM2 OC3 selected as blanking source

All other values: reserved

Bits 17:16 **HYST[1:0]:** Comparator 1 hysteresis selection bits

These bits are set and cleared by software (only if LOCK not set). They select the Hysteresis voltage of the comparator 1.

00: No hysteresis

01: Low hysteresis

10: Medium hysteresis

11: High hysteresis

Bit 15 **POLARITY:** Comparator 1 polarity selection bit

This bit is set and cleared by software (only if LOCK not set). It inverts Comparator 1 polarity.

0: Comparator 1 output value not inverted

1: Comparator 1 output value inverted

Bits 14: Reserved, must be kept at reset value.

Bit 7 **INPSEL**: Comparator1 input plus selection bit

This bit is set and cleared by software (only if LOCK not set).

0: external IO - PC5

1: PB2

Bits 6:4 **INMSEL**: Comparator 1 input minus selection bits

These bits are set and cleared by software (only if LOCK not set). They select which input is connected to the input minus of comparator 1.

000 = 1/4 V_{REFINT}

001 = 1/2 V_{REFINT}

010 = 3/4 V_{REFINT}

011 = V_{REFINT}

100 = DAC Channel1

101 = DAC Channel2

110 = PB1111 = PC4

Bits 3:2 **PWRMODE[1:0]:** Power Mode of the comparator 1

These bits are set and cleared by software (only if LOCK not set). They control the power/speed of the Comparator 1.

00: High speed

01 or 10: Medium speed

11: Ultra low power

Bit 1 Reserved, must be kept cleared.

Bit 0 **EN:** Comparator 1 enable bit

This bit is set and cleared by software (only if LOCK not set). It switches on Comparator1.

0: Comparator 1 switched OFF

1: Comparator 1 switched ON

22.6.2 Comparator 2 control and status register (COMP2_CSR)

The COMP2_CSR is the Comparator 2 control/status register. It contains all the bits /flags related to comparator 2.

Address offset: 0x04

System reset value: 0x0000 0000

31	30	29	28	27	26	25	24	23	22	21	20	19	18	17	16
LOCK	VALUE	Res.	Res.	Res.	Res.	Res.	Res.	SCAL EN	BRG EN	Res.	BLANKING			HYST	
rs	r							rw	rw		rw			rw	

15	14	13	12	11	10	9	8	7	6	5	4	3	2	1	0
POLA RITY	Res.	Res.	Res.	Res.	Res.	WIN MODE	Res.	INP SEL.	INMSEL			PWRMODE		Res.	EN
rw						rw		rw	rw			rw			rw

Bit 31 **LOCK:** CSR register lock bit

This bit is set by software and cleared by a hardware system reset. It locks the whole content of the comparator 2 control register, COMP2_CSR[31:0].

0: COMP2_CSR[31:0] for comparator 2 are read/write

1: COMP2_CSR[31:0] for comparator 2 are read-only

Bit 30 **VALUE:** Comparator 2 output status bit

This bit is read-only. It reflects the current comparator 2 output taking into account POLARITY bit effect.

Bits 29: Reserved, must be kept at reset value

Bit 23 **SCALEN**: Voltage scaler enable bit

This bit is set and cleared by software. This bit enable the outputs of the V_{REFINT} divider available on the minus input of the Comparator 2.

0: Bandgap scaler disable (if SCALEN bit of COMP1_CSR register is also reset)

1: Bandgap scaler enable

Bit 22 **BRGEN:** Scaler bridge enable

This bit is set and cleared by software (only if LOCK not set). This bit enable the bridge of the scaler.

0: Scaler resistor bridge disable (if BRGEN bit of COMP1_CSR register is also reset)

1: Scaler resistor bridge enable

If SCALEN is set and BRGEN is reset, BG voltage reference is available but not 1/4 BGAP, 1/2 BGAP, 3/4 BGAP. BGAP value is sent instead of 1/4 BGAP, 1/2 BGAP, 3/4 BGAP.

If SCALEN and BRGEN are set, 1/4 BGAP 1/2 BGAP 3/4 BGAP and BGAP voltage references are available.

Bit 21 Reserved, must be kept at reset value

Bits 20:18 **BLANKING[2:0]:** Comparator 2 blanking source selection bits

These bits select which timer output controls the comparator 2 output blanking.

000: No blanking

100: TIM15 OC1 selected as blanking source

All other values: reserved

Bits 17:16 **HYST[1:0]:** Comparator 2 hysteresis selection bits

These bits are set and cleared by software (only if LOCK not set). Select the hysteresis voltage of the comparator 2.

00: No hysteresis

01: Low hysteresis

10: Medium hysteresis

11: High hysteresis

Bit 15 **POLARITY:** Comparator 2 polarity selection bit

This bit is set and cleared by software (only if LOCK not set). It inverts Comparator 2 polarity.

0: Comparator 2 output value not inverted

1: Comparator 2 output value inverted

Bits 14:10 Reserved, must be kept at reset value.

Bit 9 **WINMODE**: Windows mode selection bit

This bit is set and cleared by software (only if LOCK not set). This bit selects the window mode of the comparators. If set, both positive inputs of comparators will be connected together.

0: Input plus of Comparator 2 is not connected to Comparator 1

1: Input plus of Comparator 2 is connected with input plus of Comparator 1

Bit 8 Reserved, must be kept at reset value.

Bit 7 **INPSEL**: Comparator 1 input plus selection bit

This bit is set and cleared by software (only if LOCK not set).

0: PB4

1: PB6

Bits 6:4 **INMSEL**: Comparator 2 input minus selection bits

These bits are set and cleared by software (only if LOCK not set). They select which input is connected to the input minus of comparator 2.

000 = 1/4 V_{REFINT}
001 = 1/2 V_{REFINT}
010 = 3/4 V_{REFINT}
011 = V_{REFINT}
100 = DAC Channel1
101 = DAC Channel2
110 = PB3
111 = PB7

Bits 3:2 **PWRMODE[1:0]:** Power Mode of the comparator 2

These bits are set and cleared by software (only if LOCK not set). They control the power/speed of the Comparator 2.

00: High speed
01 or 10: Medium speed
11: Ultra low power

Bit 1 Reserved, must be kept cleared.

Bit 0 **EN:** Comparator 2 enable bit

This bit is set and cleared by software (only if LOCK not set). It switches oncomparator2.

0: Comparator 2 switched OFF
1: Comparator 2 switched ON

22.6.3 COMP register map

The following table summarizes the comparator registers.

Table 149. COMP register map and reset values

Offset	Register	31	30	29	28	27	26	25	24	23	22	21	20	19	18	17	16	15	14	13	12	11	10	9	8	7	6	5	4	3	2	1	0
0x00	**COMP1_CSR**	LOCK	VALUE	Res.	Res.	Res.	Res.	Res.	Res.	SCALEN	BRGEN.	Res.	BLANKING			HYST		POLARITY.	Res.	Res.	Res.	Res.	Res.	Res.	INPSEL.		INMSEL			PWRMODE		Res.	EN
	Reset value	0	0							0	0		0	0	0	0	0	0							0	0	0	0	0	0	0		0
0x04	**COMP2_CSR**	LOCK	VALUE	Res.	Res.	Res.	Res.	Res.	Res.	SCALEN	BRGEN	Res.	BLANKING			HYST		POLARITY.	Res.	Res.	Res.	Res.	Res.	WINMODE	Res.	INPSEL	INMSEL			PWRMODE		Res.	EN
	Reset value	0	0							0	0		0	0	0	0	0	0						0		0	0	0	0	0	0		0

Refer to *Section 2.2 on page 75* for the register boundary addresses.

23 Operational amplifiers (OPAMP)

23.1 Introduction

The device embeds two operational amplifiers with two inputs and one output each. The three I/Os can be connected to the external pins, this enables any type of external interconnections. The operational amplifier can be configured internally as a follower or as an amplifier with a non-inverting gain ranging from 2 to 16.

The positive input can be connected to the internal DAC.

The output can be connected to the internal ADC.

23.2 OPAMP main features

- Rail-to-rail input and output voltage range
- Low input bias current (down to 1 nA)
- Low input offset voltage (1.5 mV after calibration, 3 mV with factory calibration)
- Low-power mode (current consumption reduced to 30 µA instead of 100 µA)
- Fast wakeup time (10 µs in normal mode, 30 µs in low-power mode)
- Gain bandwidth of 1.6 MHz

23.3 OPAMP functional description

The OPAMP has several modes.

Each OPAMP can be individually enabled, when disabled the output is high-impedance.

When enabled, it can be in calibration mode, all input and output of the OPAMP are then disconnected, or in functional mode.

There are two functional modes, the low-power mode or the normal mode. In functional mode the inputs and output of the OPAMP are connected as described in the *Section 23.3.3: Signal routing*.

23.3.1 OPAMP reset and clocks

The operational amplifier clock is necessary for accessing the registers. When the application does not need to have read or write access to those registers, the clock can be switched off using the peripheral clock enable register (see OPAMPEN bit in *Section 6.4.19: APB1 peripheral clock enable register 1 (RCC_APB1ENR1)*).

The bit OPAEN enables and disables the OPAMP operation. The OPAMP registers configurations should be changed before enabling the OPAEN bit in order to avoid spurious effects on the output.

When the output of the operational amplifier is no more needed the operational amplifier can be disabled to save power. All the configurations previously set (including the calibration) are maintained while OPAMP is disabled.

23.3.2 Initial configuration

The default configuration of the operational amplifier is a functional mode where the three IOs are connected to external pins. In the default mode the operational amplifier uses the factory trimming values. See electrical characteristics section of the datasheet for factory trimming conditions, usually the temperature is 30 °C and the voltage is 3 V. The trimming values can be adjusted, see *Section 23.3.5: Calibration* for changing the trimming values. The default configuration uses the normal mode, which provides the highest performance. Bit OPALPM can be set in order to switch the operational amplifier to low-power mode and reduced performance. Both normal and low-power mode characteristics are defined in the section “electrical characteristics” of the datasheet. Before utilization, the bit OPA_RANGE of OPAMP_CSR must be set to 1 if V_{DDA} is above 2.4V, or kept at 0 otherwise.

As soon as the OPAEN bit in OPAMP_CSR register is set, the operational amplifier is functional. The two input pins and the output pin are connected as defined in *Section 23.3.3: Signal routing* and the default connection settings can be changed.

Note: The inputs and output pins must be configured in analog mode (default state) in the corresponding GPIOx_MODER register.

23.3.3 Signal routing

The routing for the operational amplifier pins is determined by OPAMP_CSR register.

The connections of the two operational amplifiers (OPAMP1 and OPAMP2) are described in the table below.

Table 150. Operational amplifier possible connections

Signal	Pin	Internal	comment
OPAMP1_VINM	PA1 or dedicated pin(1)	OPAMP1_OUT or PGA	controlled by bits OPAMODE and VM_SEL.
OPAMP1_VINP	PA0	DAC1_OUT1	controlled by bit VP_SEL.
OPAMP1_VOUT	PA3	ADC1_IN8 ADC2_IN8	The pin is connected when the OPAMP is enabled. The ADC input is controlled by ADC.
OPAMP2_VINM	PA7 or dedicated pin(1)	OPAMP2_OUT or PGA	controlled by bits OPAMODE and VM_SEL.
OPAMP2_VINP	PA6	DAC1_OUT2	controlled by bit VP_SEL
OPAMP2_VOUT	PB0	ADC1_IN15 ADC2_IN15	The pin is connected when the OPAMP is enabled. The ADC input is controlled by ADC.

1. The dedicated pin is only available on BGA132 and BGA169 (for STM32L49x/L4Ax devices) package. This configuration provides the lowest input bias current (see datasheet).

23.3.4 OPAMP modes

The operational amplifier inputs and outputs are all accessible on terminals. The amplifiers can be used in multiple configuration environments:

- Standalone mode (external gain setting mode)
- Follower configuration mode
- PGA modes

Note: The amplifier output pin is directly connected to the output pad to minimize the output impedance. It cannot be used as a general purpose I/O, even if the amplifier is configured as a PGA and only connected to the ADC channel.

Note: The impedance of the signal must be maintained below a level which avoids the input leakage to create significant artifacts (due to a resistive drop in the source). Please refer to the electrical characteristics section in the datasheet for further details.

Standalone mode (external gain setting mode)

The procedure to use the OPAMP in standalone mode is presented hereafter.

Starting from the default value of OPAMP_CSR, and the default state of GPIOx_MODER, configure bit OPA_RANGE according the V_{DDA} voltage. As soon as the OPAEN bit is set, the two input pins and the output pin are connected to the operational amplifier.

This default configuration uses the factory trimming values and operates in normal mode (highest performance). The behavior of the OPAMP can be changed as follows:

- OPALPM can be set to “operational amplifier low-power” mode in order to save power.
- USERTRIM can be set to modify the trimming values for the input offset.

Figure 159. Standalone mode: external gain setting mode

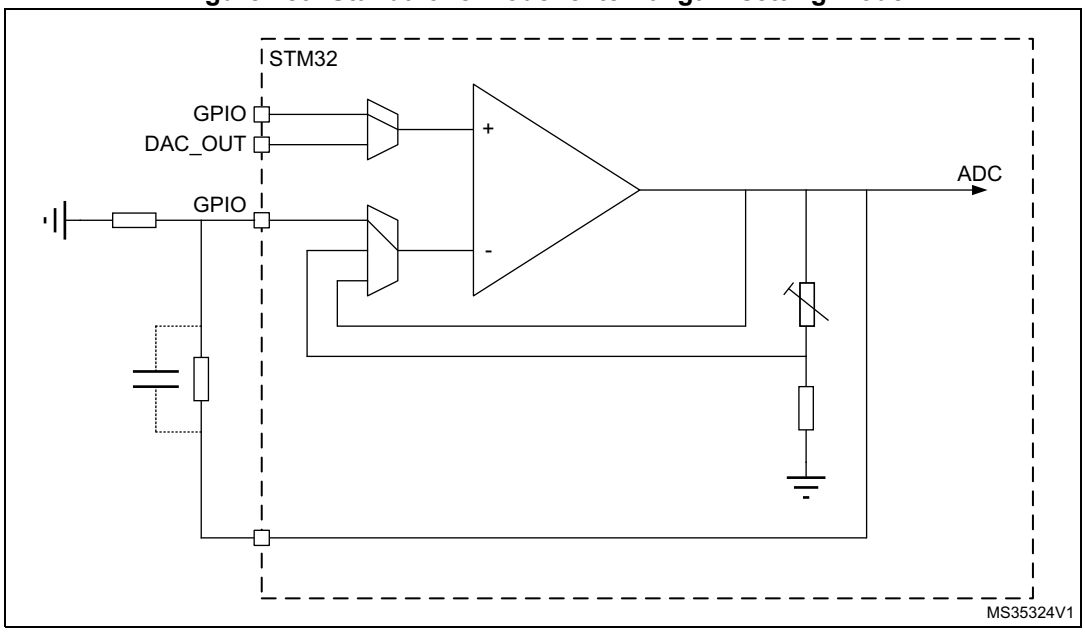

Follower configuration mode

The procedure to use the OPAMP in follower mode is presented hereafter.

- configure OPAMODE bits as “internal follower”
- configure VP_SEL bits as “GPIO connected to VINP”.
- As soon as the OPAEN bit is set, the signal on pin OPAMP_VINP is copied to pin OPAMP_VOUT.

Note: The pin corresponding to OPAMP_VINM is free for another usage.

Note: The signal on the operational amplifier output is also seen as an ADC input. As a consequence, the OPAMP configured in follower mode can be used to perform impedance adaptation on input signals before feeding them to the ADC input, assuming the input signal frequency is compatible with the operational amplifier gain bandwidth specification.

Figure 160. Follower configuration

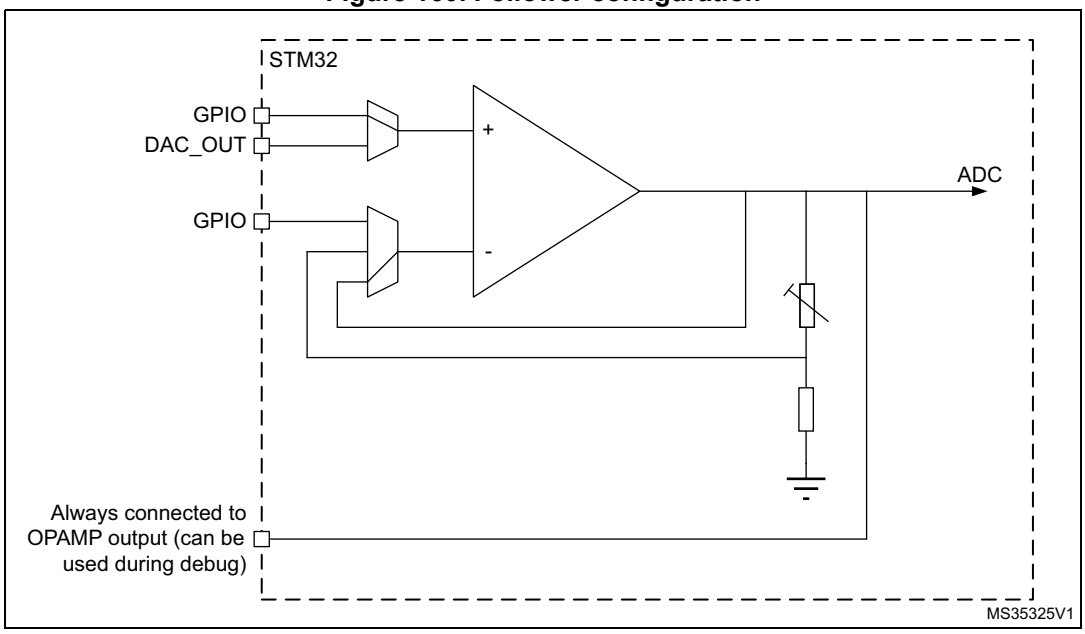

Programmable Gain Amplifier mode

The procedure to use the OPAMP to amplify the amplitude of an input signal is presented hereafter.

- configure OPAMODE bits as “internal PGA enabled”,
- configure PGA_GAIN bits as “internal PGA Gain 2, 4, 8 or 16”,
- configure VM_SEL bits as “inverting not externally connected”,
- configure VP_SEL bits as “GPIO connected to VINP”.

As soon as the OPAEN bit is set, the signal on pin OPAMP_VINP is amplified by the selected gain and visible on pin OPAMP_VOUT.

Note: To avoid saturation, the input voltage should stay below V_{DDA} divided by the selected gain.

Figure 161. PGA mode, internal gain setting (x2/x4/x8/x16), inverting input not used

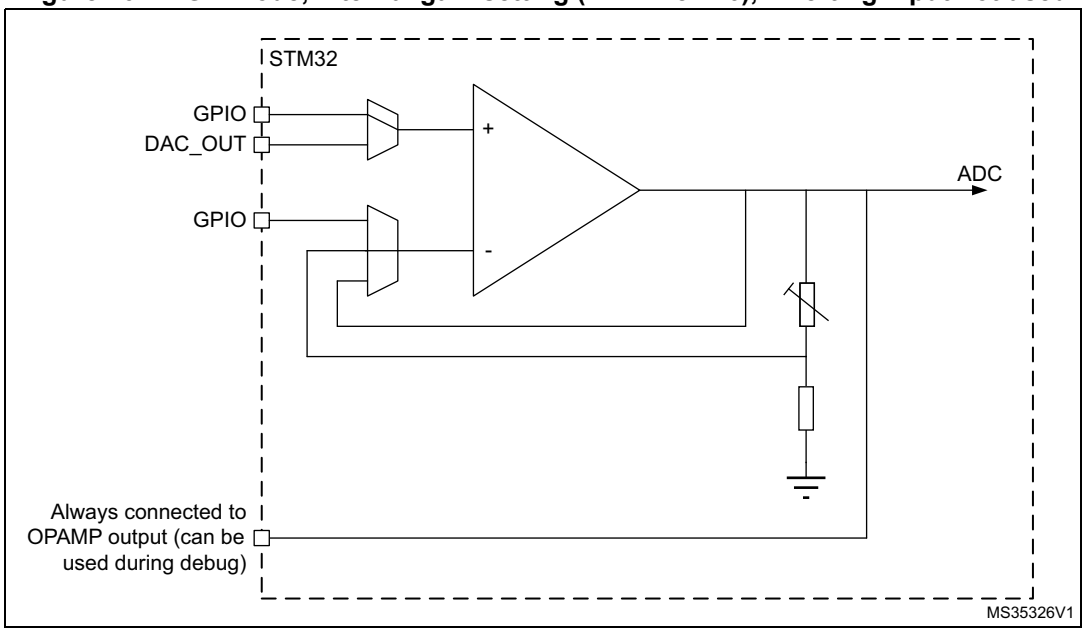

Programmable Gain Amplifier mode with external filtering

The procedure to use the OPAMP to amplify the amplitude of an input signal, with an external filtering, is presented hereafter.

- configure OPAMODE bits as “internal PGA enabled”,
- configure PGA_GAIN bits as “internal PGA Gain 2, 4, 8 or 16”,
- configure VM_SEL bits as “GPIO connected to VINM”,
- configure VP_SEL bits as “GPIO connected to VINP”.

Any external connection on VINP can be used in parallel with the internal PGA, for example a capacitor can be connected between VOUT and VINM for filtering purpose (see datasheet for the value of resistors used in the PGA resistor network).

Figure 162. PGA mode, internal gain setting (x2/x4/x8/x16), inverting input used for filtering

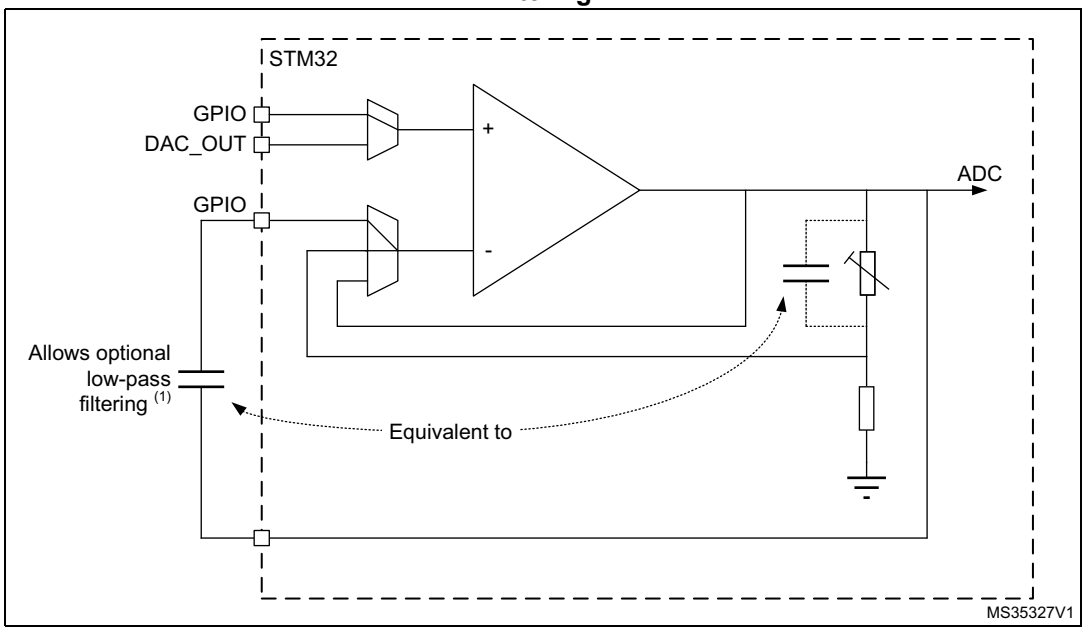

1. The gain depends on the cut-off frequency.

23.3.5 Calibration

At startup, the trimming values are initialized with the preset ‘factory’ trimming value.

Each operational amplifier offset can be trimmed by the user. Specific registers allow to have different trimming values for normal mode and for low-power mode.

The aim of the calibration is to cancel as much as possible the OPAMP inputs offset voltage. The calibration circuitry allows to reduce the inputs offset voltage to less than +/-1.5 mV within stable voltage and temperature conditions.

For each operational amplifier and each mode two trimming values need to be trimmed, one for N differential pair and one for P differential pair.

There are two registers for trimming the offsets for each operational amplifiers, one for normal mode (OPAMP_OTR) and one low-power mode (OPAMP_LPOTR). Each register is composed of five bits for P differential pair trimming and five bits for N differential pair trimming. These are the ‘user’ values.

The user is able to switch from ‘factory’ values to ‘user’ trimmed values using the USERTRIM bit in the OPAMP_CSR register. This bit is reset at startup and so the ‘factory’ value are applied by default to the OPAMP trimming registers.

User is liable to change the trimming values in calibration or in functional mode.

The offset trimming registers are typically configured after the calibration operation is initialized by setting bit CALON to 1. When CALON = 1 the inputs of the operational amplifier are disconnected from the functional environment.

- Setting CALSEL to 1 initializes the offset calibration for the P differential pair (low voltage reference used).
- Resetting CALSEL to 0 initializes the offset calibration for the N differential pair (high voltage reference used).

When CALON = 1, the bit CALOUT will reflect the influence of the trimming value selected by CALSEL and OPALPM. When the value of CALOUT switches between two consecutive trimming values, this means that those two values are the best trimming values. The CALOUT flag needs up to 1 ms after the trimming value is changed to become steady (see $t_{OFFTRIM}$max delay specification in the electrical characteristics section of the datasheet).

Note: The closer the trimming value is to the optimum trimming value, the longer it takes to stabilize (with a maximum stabilization time remaining below 1 ms in any case).

Table 151. Operating modes and calibration

Mode	Control bits				Output	
	OPAEN	OPALPM	CALON	CALSEL	V_{OUT}	CALOUT flag
Normal operating mode	1	0	0	X	analog	0
Low-power mode	1	1	0	X	analog	0
Power down	0	X	X	X	Z	0
Offset cal high for normal mode	1	0	1	0	analog	X
Offset cal low for normal mode	1	0	1	1	analog	X
Offset cal high for low-power mode	1	1	1	0	analog	X
Offset cal low for low-power mode	1	1	1	1	analog	X

Calibration procedure

Here are the steps to perform a full calibration of either one of the operational amplifiers:

1. Select correct OPA_RANGE in OPAMP_CSR, then set the OPAEN bit in OPAMP_CSR to 1 to enable the operational amplifier.
2. Set the USERTRIM bit in the OPAMP_CSR register to 1.
3. Choose a calibration mode (refer to *Table 151: Operating modes and calibration*). The steps 3 to 4 will have to be repeated 4 times. For the first iteration select
   – Normal mode, offset cal high (N differential pair)

   The above calibration mode correspond to OPALPM=0 and CALSEL=0 in the OPAMP_CSR register.
4. Increment TRIMOFFSETN[4:0] in OPAMP_OTR starting from 00000b until CALOUT changes to 1 in OPAMP_CSR.

Note: CALOUT will switch from 0 to 1 for offset cal high and from 1 to 0 for offset cal low.

Note: Between the write to the OPAMP_OTR register and the read of the CALOUT value, make sure to wait for the $t_{OFFTRIM}$max delay specified in the electrical characteristics section of the datasheet, to get the correct CALOUT value.

The commutation means that the offset is correctly compensated and that the corresponding trim code must be saved in the OPAMP_OTR register.

Repeat steps 3 to 4 for:

– Normal_mode and offset cal low
– Low power mode and offset cal high
– Low power mode and offset cal low

If a mode is not used it is not necessary to perform the corresponding calibration.

All operational amplifier can be calibrated at the same time.

Note: During the whole calibration phase the external connection of the operational amplifier output must not pull up or down currents higher than 500 µA.

During the calibration procedure, it is necessary to set up OPAMODE bits as 00 or 01 (PGA disable) or 11 (internal follower).

23.4 OPAMP low-power modes

Table 152. Effect of low-power modes on the OPAMP

Mode	Description
Sleep	No effect.
Low-power run	No effect.
Low-power sleep	No effect.
Stop 0 / Stop 1	No effect, OPAMP registers content is kept.
Stop 2	OPAMP registers content is kept. OPAMP must be disabled before entering Stop 2 mode.

Table 152. Effect of low-power modes on the OPAMP (continued)

Mode	Description
Standby	The OPAMP registers are powered down and must be re-initialized after exiting Standby or Shutdown mode.
Shutdown	

23.5 OPAMP registers

23.5.1 OPAMP1 control/status register (OPAMP1_CSR)

Address offset: 0x00

Reset value: 0x0000 0000

31	30	29	28	27	26	25	24	23	22	21	20	19	18	17	16
OPA_ RANGE	Res.	Res.	Res.	Res.	Res.	Res.	Res.	Res.	Res.	Res.	Res.	Res.	Res.	Res.	Res.
rw															

15	14	13	12	11	10	9	8	7	6	5	4	3	2	1	0
CAL OUT	USER TRIM	CAL SEL	CALON	Res.	VP_ SEL	VM_SEL		Res.	Res.	PGA_GAIN		OPAMODE		OPA LPM	OPAEN
r	rw	rw	rw		rw	rw	rw			rw	rw	rw	w	rw	rw

Bit 31 **OPA_RANGE:** Operational amplifier power supply range for stability
All AOP must be in power down to allow AOP-RANGE bit write. It applies to all AOP embedded in the product.
0: Low range (VDDA < 2.4V)
1: High range (VDDA > 2.4V)

Bits 30:16 Reserved, must be kept at reset value.

Bit 15 **CALOUT:** Operational amplifier calibration output
During calibration mode offset is trimmed when this signal toggle.

Bit 14 **USERTRIM:** allows to switch from ‘factory’ AOP offset trimmed values to AOP offset ‘user’ trimmed values
This bit is active for both mode normal and low-power.
0: ‘factory’ trim code used
1: ‘user’ trim code used

Bit 13 **CALSEL:** Calibration selection
0: NMOS calibration (200mV applied on OPAMP inputs)
1: PMOS calibration (VDDA-200mV applied on OPAMP inputs)

Bit 12 **CALON:** Calibration mode enabled
0: Normal mode
1: Calibration mode (all switches opened by HW)

Bit 11 Reserved, must be kept at reset value.

Bit 10 **VP_SEL:** Non inverted input selection
0: GPIO connected to VINP
1: DAC connected to VINP

Bits 9:8 **VM_SEL:** Inverting input selection

These bits are used only when OPAMODE = 00, 01 or 10.

00: GPIO connected to VINM (valid also in PGA mode for filtering)

01: Dedicated low leakage input, (available only on BGA132 and BGA169 for STM32L49x/L4Ax devices) connected to VINM (valid also in PGA mode for filtering)

1x: Inverting input not externally connected. These configurations are valid only when OPAMODE = 10 (PGA mode)

Bits 7:6 Reserved, must be kept at reset value.

Bits 5:4 **PGA_GAIN:** Operational amplifier Programmable amplifier gain value

00: internal PGA Gain 2

01: internal PGA Gain 4

10: internal PGA Gain 8

11: internal PGA Gain 16

Bits 3:2 **OPAMODE:** Operational amplifier PGA mode

00: internal PGA disable

01: internal PGA disable

10: internal PGA enable, gain programmed in PGA_GAIN

11: internal follower

Bit 1 **OPALPM:** Operational amplifier Low Power Mode

The operational amplifier must be disable to change this configuration.

0: operational amplifier in normal mode

1: operational amplifier in low-power mode

Bit 0 **OPAEN:** Operational amplifier Enable

0: operational amplifier disabled

1: operational amplifier enabled

23.5.2 OPAMP1 offset trimming register in normal mode (OPAMP1_OTR)

Address offset: 0x04

Reset value: 0x0000 XXXX (factory trimmed values)

31	30	29	28	27	26	25	24	23	22	21	20	19	18	17	16
Res.	Res.	Res.	Res.	Res.	Res.	Res.	Res.	Res.	Res.	Res.	Res.	Res.	Res.	Res.	Res.

15	14	13	12	11	10	9	8	7	6	5	4	3	2	1	0
Res.	Res.	Res.	TRIMOFFSETP					Res.	Res.	Res.	TRIMOFFSETN				
			rw	rw	rw	rw	rw				rw	rw	rw	rw	rw

Bits 31:13 Reserved, must be kept at reset value.

Bits 12:8 **TRIMOFFSETP[4:0]:** Trim for PMOS differential pairs

Bits 7:5 Reserved, must be kept at reset value.

Bits 4:0 **TRIMOFFSETN[4:0]:** Trim for NMOS differential pairs

23.5.3 OPAMP1 offset trimming register in low-power mode (OPAMP1_LPOTR)

Address offset: 0x08

Reset value: 0x0000 XXXX (factory trimmed values)

31	30	29	28	27	26	25	24	23	22	21	20	19	18	17	16
Res.	Res.	Res.	Res.	Res.	Res.	Res.	Res.	Res.	Res.	Res.	Res.	Res.	Res.	Res.	Res.

15	14	13	12	11	10	9	8	7	6	5	4	3	2	1	0
Res.	Res.	Res.	TRIMLPOFFSETP					Res.	Res.	Res.	TRIMLPOFFSETN				
			rw	rw	rw	rw	rw				rw	rw	rw	rw	rw

Bits 31:13 Reserved, must be kept at reset value.

Bits 12:8 **TRIMLPOFFSETP[4:0]:** Low-power mode trim for PMOS differential pairs

Bits 7:5 Reserved, must be kept at reset value.

Bits 4:0 **TRIMLPOFFSETN[4:0]:** Low-power mode trim for NMOS differential pairs

23.5.4 OPAMP2 control/status register (OPAMP2_CSR)

Address offset: 0x10

Reset value: 0x0000 0000

31	30	29	28	27	26	25	24	23	22	21	20	19	18	17	16
Res.	Res.	Res.	Res.	Res.	Res.	Res.	Res.	Res.	Res.	Res.	Res.	Res.	Res.	Res.	Res.

15	14	13	12	11	10	9	8	7	6	5	4	3	2	1	0
CAL OUT	USER TRIM	CAL SEL	CALON	Res.	VP_ SEL	VM_SEL		Res.	Res.	PGA_GAIN		OPAMODE		OPA LPM	OPAEN
r	rw	rw	rw		rw	rw	rw			rw	rw	rw	w	rw	rw

Bits 31:16 Reserved, must be kept at reset value.

Bit 15 **CALOUT:** Operational amplifier calibration output
During calibration mode offset is trimmed when this signal toggle.

Bit 14 **USERTRIM:** allows to switch from ‘factory’ AOP offset trimmed values to AOP offset ‘user’ trimmed values
This bit is active for both mode normal and low-power.
0: ‘factory’ trim code used
1: ‘user’ trim code used

Bit 13 **CALSEL:** Calibration selection
0: NMOS calibration (200mV applied on OPAMP inputs)
1: PMOS calibration (VDDA-200mV applied on OPAMP inputs)

Bit 12 **CALON:** Calibration mode enabled
0: Normal mode
1: Calibration mode (all switches opened by HW)

Bit 11 Reserved, must be kept at reset value.

Bit 10 **VP_SEL:** Non inverted input selection
0: GPIO connected to VINP
1: DAC connected to VINP

Bits 9:8 **VM_SEL:** Inverting input selection

These bits are used only when OPAMODE = 00, 01 or 10.

00: GPIO connected to VINM (valid also in PGA mode for filtering)

01: Dedicated low leakage input, (available only on BGA132) connected to VINM (valid also in PGA mode for filtering)

1x: Inverting input not externally connected. These configurations are valid only when OPAMODE = 10 (PGA mode)

Bits 7:6 Reserved, must be kept at reset value.

Bits 5:4 **PGA_GAIN:** Operational amplifier Programmable amplifier gain value

00: internal PGA Gain 2

01: internal PGA Gain 4

10: internal PGA Gain 8

11: internal PGA Gain 16

Bits 3:2 **OPAMODE:** Operational amplifier PGA mode

00: internal PGA disable

01: internal PGA disable

10: internal PGA enable, gain programmed in PGA_GAIN

11: internal follower

Bit 1 **OPALPM:** Operational amplifier Low Power Mode

The operational amplifier must be disable to change this configuration.

0: operational amplifier in normal mode

1: operational amplifier in low-power mode

Bit 0 **OPAEN:** Operational amplifier Enable

0: operational amplifier disabled

1: operational amplifier enabled

23.5.5 OPAMP2 offset trimming register in normal mode (OPAMP2_OTR)

Address offset: 0x14

Reset value: 0x0000 XXXX (factory trimmed values)

31	30	29	28	27	26	25	24	23	22	21	20	19	18	17	16
Res.	Res.	Res.	Res.	Res.	Res.	Res.	Res.	Res.	Res.	Res.	Res.	Res.	Res.	Res.	Res.

15	14	13	12	11	10	9	8	7	6	5	4	3	2	1	0
Res.	Res.	Res.	TRIMOFFSETP					Res.	Res.	Res.	TRIMOFFSETN				
			rw	rw	rw	rw	rw				rw	rw	rw	rw	rw

Bits 31:13 Reserved, must be kept at reset value.

Bits 12:8 **TRIMOFFSETP[4:0]:** Trim for PMOS differential pairs

Bits 7:5 Reserved, must be kept at reset value.

Bits 4:0 **TRIMOFFSETN[4:0]:** Trim for NMOS differential pairs

23.5.6 OPAMP2 offset trimming register in low-power mode (OPAMP2_LPOTR)

Address offset: 0x18

Reset value: 0x0000 XXXX (factory trimmed values)

31	30	29	28	27	26	25	24	23	22	21	20	19	18	17	16
Res.	Res.	Res.	Res.	Res.	Res.	Res.	Res.	Res.	Res.	Res.	Res.	Res.	Res.	Res.	Res.

15	14	13	12	11	10	9	8	7	6	5	4	3	2	1	0
Res.	Res.	Res.	TRIMLPOFFSETP					Res.	Res.	Res.	TRIMLPOFFSETN				
			rw	rw	rw	rw	rw				rw	rw	rw	rw	rw

Bits 31:13 Reserved, must be kept at reset value.

Bits 12:8 **TRIMLPOFFSETP[4:0]:** Low-power mode trim for PMOS differential pairs

Bits 7:5 Reserved, must be kept at reset value.

Bits 4:0 **TRIMLPOFFSETN[4:0]:** Low-power mode trim for NMOS differential pairs

23.5.7 OPAMP register map

Table 153. OPAMP register map and reset values

Offset	Register	31	30	29	28	27	26	25	24	23	22	21	20	19	18	17	16	15	14	13	12	11	10	9	8	7	6	5	4	3	2	1	0
0x00	**OPAMP1_CSR**	OPA_RANGE	Res.	Res.	Res.	Res.	Res.	Res.	Res.	Res.	Res.	Res.	Res.	Res.	Res.	Res.	Res.	CALOUT	USERTRIM	CALSEL	CALON	Res.	VP_SEL	VM_SEL		Res.	Res.	PGA_GAIN		OPAMODE		OPALPM	OPAEN
	Reset value	0																0	0	0	0		0	0	0			0	0	0	0	0	0
0x04	**OPAMP1_OTR**	Res.	Res.	Res.	Res.	Res.	Res.	Res.	Res.	Res.	Res.	Res.	Res.	Res.	Res.	Res.	Res.	Res.	Res.	Res.	TRIM OFFSETP[4:0]					Res.	Res.	Res.	TRIM OFFSETN[4:0]				
	Reset value																				(1)								(1)				
0x08	**OPAMP1_ LPOTR**	Res.	Res.	Res.	Res.	Res.	Res.	Res.	Res.	Res.	Res.	Res.	Res.	Res.	Res.	Res.	Res.	Res.	Res.	Res.	TRIMLP OFFSETP[4:0]					Res.	Res.	Res.	TRIMLP OFFSETN[4:0]				
	Reset value																				(1)								(1)				
0x10	**OPAMP2_CSR**	Res.	Res.	Res.	Res.	Res.	Res.	Res.	Res.	Res.	Res.	Res.	Res.	Res.	Res.	Res.	Res.	CALOUT	USERTRIM	CALSEL	CALON	Res.	VP_SEL	VM_SEL		Res.	Res.	PGA_GAIN		OPAMODE		OPALPM	OPAEN
	Reset value																	0	0	0	0		0	0	0			0	0	0	0	0	0
0x14	**OPAMP2_OTR**	Res.	Res.	Res.	Res.	Res.	Res.	Res.	Res.	Res.	Res.	Res.	Res.	Res.	Res.	Res.	Res.	Res.	Res.	Res.	TRIM OFFSETP[4:0]					Res.	Res.	Res.	TRIM OFFSETN[4:0]				
	Reset value																				(1)								(1)				
0x18	**OPAMP2_ LPOTR**	Res.	Res.	Res.	Res.	Res.	Res.	Res.	Res.	Res.	Res.	Res.	Res.	Res.	Res.	Res.	Res.	Res.	Res.	Res.	TRIMLP OFFSETP[4:0]					Res.	Res.	Res.	TRIMLP OFFSETN[4:0]				
	Reset value																				(1)								(1)				

1. Factory trimmed values.

Refer to *Section 2.2 on page 75* for the register boundary addresses.

24 Digital filter for sigma delta modulators (DFSDM)

24.1 Introduction

Digital filter for sigma delta modulators (DFSDM) is a high-performance module dedicated to interface external ΣΔ modulators. It is featuring up to 8 external digital serial interfaces (channels) and up to 4 digital filters with flexible Sigma Delta stream digital processing options to offer up to 24-bit final ADC resolution. DFSDM also features optional parallel data stream input from internal ADC peripherals[(a)] or from device memory.

An external ΣΔ modulator provides digital data stream of converted analog values from the external ΣΔ modulator analog input. This digital data stream is sent into a DFSDM input channel through a serial interface. DFSDM supports several standards to connect various ΣΔ modulator outputs: SPI interface and Manchester coded 1-wire interface (both with adjustable parameters). DFSDM module supports the connection of up to 8 multiplexed input digital serial channels which are shared with up to 4 DFSDM modules. DFSDM module also supports alternative parallel data inputs from up to 8 internal 16-bit data channels (from internal ADCs[(a)] or from device memory).

DFSDM is converting an input data stream into a final digital data word which represents an analog input value on a ΣΔ modulator analog input. The conversion is based on a configurable digital process: the digital filtering and decimation of the input serial data stream.

The conversion speed and resolution are adjustable according to configurable parameters for digital processing: filter type, filter order, length of filter, integrator length. The maximum output data resolution is up to 24 bits. There are two conversion modes: single conversion mode and continuous mode. The data can be automatically stored in a system RAM buffer through DMA, thus reducing the software overhead.

A flexible timer triggering system can be used to control the start of conversion of DFSDM. This timing control is capable of triggering simultaneous conversions or inserting a programmable delay between conversions.

DFSDM features an analog watchdog function. Analog watchdog can be assigned to any of the input channel data stream or to final output data. Analog watchdog has its own digital filtering of input data stream to reach the required speed and resolution of watched data.

To detect short-circuit in control applications, there is a short-circuit detector. This block watches each input channel data stream for occurrence of stable data for a defined time duration (several 0's or 1's in an input data stream).

An extremes detector block watches final output data and stores maximum and minimum values from the output data values. The extremes values stored can be restarted by software.

Two power modes are supported: normal mode and stop mode.

a. Availability of the input from internal ADC is device dependent, see *Table 154: DFSDM1 implementation*.

24.2 DFSDM main features

- Up to 8 multiplexed input digital serial channels:
  - configurable SPI interface to connect various ΣΔ modulators
  - configurable Manchester coded 1 wire interface support
  - clock output for ΣΔ modulator(s)
- Alternative inputs from up to 8 internal digital parallel channels:
  - inputs with up to 16 bit resolution
  - internal sources: ADCs data[(a)] or memory (CPU/DMA write) data streams
- Adjustable digital signal processing:
  - $Sinc^x$ filter: filter order/type (1..5), oversampling ratio (up to 1..1024)
  - integrator: oversampling ratio (1..256)
- Up to 24-bit output data resolution:
  - right bit-shifter on final data (0..31 bits)
- Signed output data format
- Automatic data offset correction (offset stored in register by user)
- Continuous or single conversion
- Start-of-conversion synchronization with:
  - software trigger
  - internal timers
  - external events
  - start-of-conversion synchronously with first DFSDM filter (DFSDM_FLT0)
- Analog watchdog feature:
  - low value and high value data threshold registers
  - own configurable $Sinc^x$ digital filter (order = 1..3, oversampling ratio = 1..32)
  - input from output data register or from one or more input digital serial channels
  - continuous monitoring independently from standard conversion
- Short-circuit detector to detect saturated analog input values (bottom and top ranges):
  - up to 8-bit counter to detect 1..256 consecutive 0's or 1's on input data stream
  - monitoring continuously each channel (8 serial channel transceiver outputs)
- Break generation on analog watchdog event or short-circuit detector event
- Extremes detector:
  - store minimum and maximum values of output data values
  - refreshed by software
- DMA may be used to read the conversion data
- Interrupts: end of conversion, overrun, analog watchdog, short-circuit, channel clock absence
- "regular" or "injected" conversions:
  - "regular" conversions can be requested at any time or even in continuous mode without having any impact on the timing of "injected" conversions

a. Availability of the input from internal ADC is device dependent, see *Table 154: DFSDM1 implementation*.

– “injected” conversions for precise timing and with high conversion priority

24.3 DFSDM implementation

This section describes the configuration implemented in DFSDMx.

Table 154. DFSDM1 implementation

DFSDM features	DFSDM1
Number of channels	8
Number of filters	4
Input from internal ADC	X(1)
Supported trigger sources	11(2)
Pulses skipper	-
ID registers support	-

1. For STM32L49x/L4Ax devices only.
2. Refer to *Table 157: DFSDM triggers connection* for available trigger sources.

24.4 DFSDM functional description

24.4.1 DFSDM block diagram

Figure 163. Single DFSDM block diagram

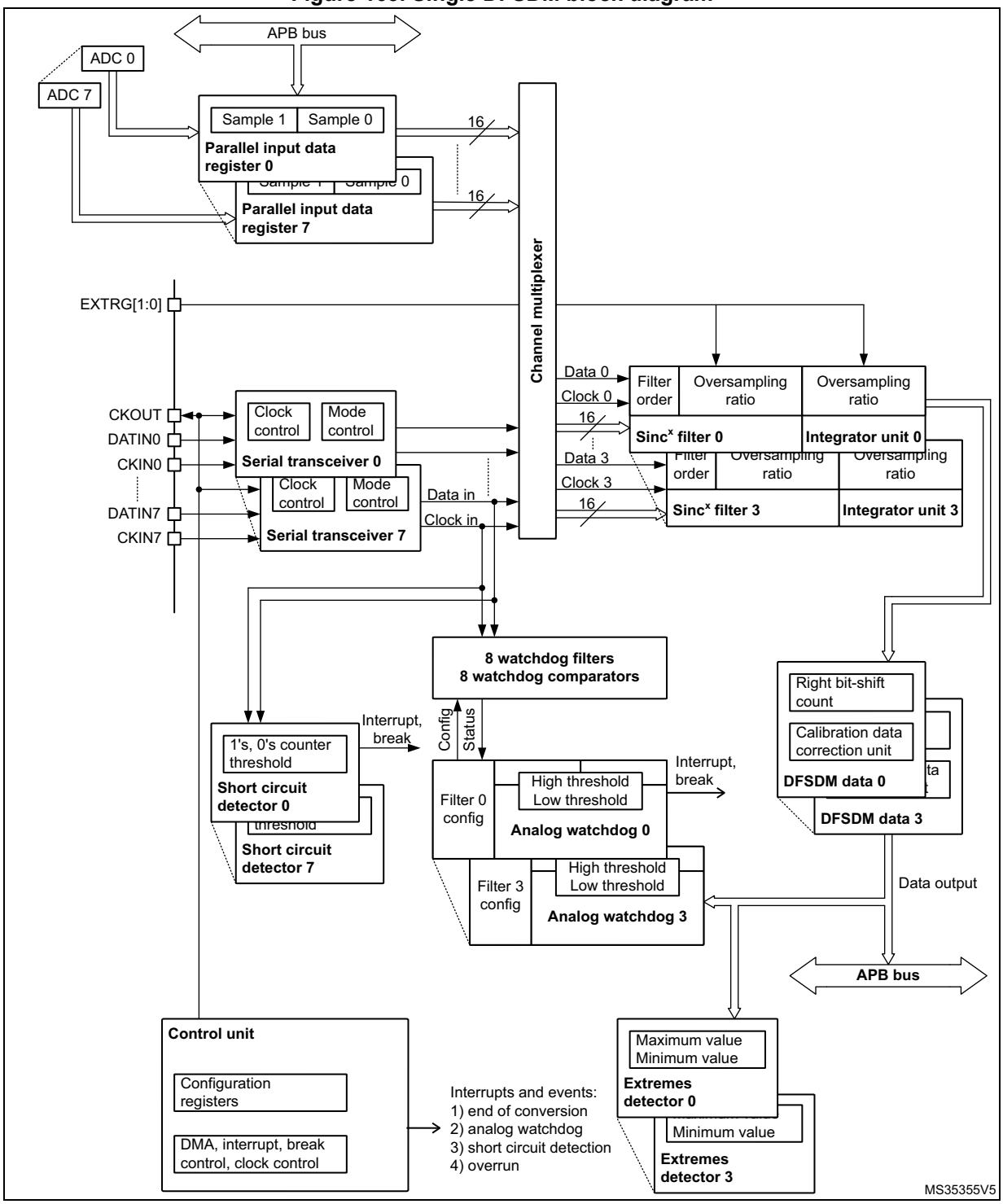

1. This example shows 4 DFSDM filters and 8 input channels (max. configuration). Availability of the input from internal ADC

is device dependent, see *Table 154: DFSDM1 implementation*.

24.4.2 DFSDM pins and internal signals

Table 155. DFSDM external pins

Name	Signal Type	Remarks
VDD	Power supply	Digital power supply.
VSS	Power supply	Digital ground power supply.
CKIN[7:0]	Clock input	Clock signal provided from external ΣΔ modulator. FT input.
DATIN[7:0]	Data input	Data signal provided from external ΣΔ modulator. FT input.
CKOUT	Clock output	Clock output to provide clock signal into external ΣΔ modulator.
EXTRG[1:0]	External trigger signal	Input trigger from two EXTI signals to start analog conversion (from GPIOs: EXTI11, EXTI15).

Table 156. DFSDM internal signals

Name	Signal Type	Remarks
dfsdm_jtrg[10:0]	Internal/ external trigger signal	Input trigger from internal/external trigger sources to start analog conversion, see *Table 157* for details.
dfsdm_break[3:0]	break signal output	Break signals event generation from Analog watchdog or short-circuit detector
dfsdm_dma[3:0]	DMA request signal	DMA request signal from each DFSDM_FLTx (x=0..3): end of injected conversion event.
dfsdm_it[3:0]	Interrupt request signal	Interrupt signal for each DFSDM_FLTx (x=0..3)
dfsdm_dat_adc[15:0](1)	ADC input data	Up to 4 internal ADC data buses as parallel inputs.

1. Availability of the input from internal ADC is device dependent, see *Table 154: DFSDM1 implementation*.

Table 157. DFSDM triggers connection

Trigger name	Trigger source
dfsdm_jtrg0	TIM1_TRGO
dfsdm_jtrg1	TIM1_TRGO2
dfsdm_jtrg2	TIM8_TRGO
dfsdm_jtrg3	TIM8_TRGO2
dfsdm_jtrg4	TIM3_TRGO
dfsdm_jtrg5	TIM4_TRGO
dfsdm_jtrg6	TIM16_OC1
dfsdm_jtrg7	TIM6_TRGO
dfsdm_jtrg8	TIM7_TRGO

Table 157. DFSDM triggers connection (continued)

Trigger name	Trigger source
dfsdm_jtrg9	EXTI11
dfsdm_jtrg10	EXTI15

Table 158. DFSDM break connection

Break name	Break destination
dfsdm_break[0]	TIM1 break
dfsdm_break[1]	TIM1 break2
dfsdm_break[2]	TIM8 break
dfsdm_break[3]	TIM8 break2

24.4.3 DFSDM reset and clocks

DFSDM on-off control

The DFSDM interface is globally enabled by setting DFSDMEN=1 in the DFSDM_CH0CFGR1 register. Once DFSDM is globally enabled, all input channels (y=0..7) and digital filters DFSDM_FLTx (x=0..3) start to work if their enable bits are set (channel enable bit CHEN in DFSDM_CHyCFGR1 and DFSDM_FLTx enable bit DFEN in DFSDM_FLTxCR1).

Digital filter x DFSDM_FLTx (x=0..3) is enabled by setting DFEN=1 in the DFSDM_FLTxCR1 register. Once DFSDM_FLTx is enabled (DFEN=1), both $Sinc^X$ digital filter unit and integrator unit are reinitialized.

By clearing DFEN, any conversion which may be in progress is immediately stopped and DFSDM_FLTx is put into stop mode. All register settings remain unchanged except DFSDM_FLTxAWSR and DFSDM_FLTxISR (which are reset).

Channel y (y=0..7) is enabled by setting CHEN=1 in the DFSDM_CHyCFGR1 register. Once the channel is enabled, it receives serial data from the external ΣΔ modulator or parallel internal data sources (ADCs[a] or CPU/DMA wire from memory).

DFSDM must be globally disabled (by DFSDMEN=0 in DFSDM_CH0CFGR1) before stopping the system clock to enter in the STOP mode of the device.

a. Availability of the input from internal ADC is device dependent, see Table 231: DFSDM1 implementation.

DFSDM clocks

The internal DFSDM clock $f_{DFSDMCLK}$, which is used to drive the channel transceivers, digital processing blocks (digital filter, integrator) and next additional blocks (analog watchdog, short-circuit detector, extremes detector, control block) is generated by the RCC block and is derived from the system clock SYSCLK or peripheral clock PCLK2 (see *Section 6.4.28: Peripherals independent clock configuration register (RCC_CCIPR)*). The DFSDM clock is automatically stopped in stop mode (if DFEN = 0 for all DFSDM_FLTx, x=0..3).

The DFSDM serial channel transceivers can receive an external serial clock to sample an external serial data stream. The internal DFSDM clock must be at least 4 times faster than the external serial clock if standard SPI coding is used, and 6 times faster than the external serial clock if Manchester coding is used.

DFSDM can provide one external output clock signal to drive external ΣΔ modulator(s) clock input(s). It is provided on CKOUT pin. This output clock signal must be in the range specified in given device datasheet and is derived from DFSDM clock or from audio clock (see CKOUTSRC bit in DFSDM_CH0CFGR1 register) by programmable divider in the range 2 - 256 (CKOUTDIV in DFSDM_CH0CFGR1 register). Audio clock source is SAI1 clock selected by SAI1SEL[1:0] field in RCC configuration (see *Section 6.4.28: Peripherals independent clock configuration register (RCC_CCIPR)*).

24.4.4 Serial channel transceivers

There are 8 multiplexed serial data channels which can be selected for conversion by each filter or Analog watchdog or Short-circuit detector. Those serial transceivers receive data stream from external ΣΔ modulator. Data stream can be sent in SPI format or Manchester coded format (see SITP[1:0] bits in DFSDM_CHyCFGR1 register).
The channel is enabled for operation by setting CHEN=1 in DFSDM_CHyCFGR1 register.

Channel inputs selection

Serial inputs (data and clock signals) from DATINy and CKINy pins can be redirected from the following channel pins. This serial input channel redirection is set by CHINSEL bit in DFSDM_CHyCFGR1 register.

Channel redirection can be used to collect audio data from PDM (pulse density modulation) stereo microphone type. PDM stereo microphone has one data and one clock signal. Data signal provides information for both left and right audio channel (rising clock edge samples for left channel and falling clock edge samples for right channel).

Configuration of serial channels for PDM microphone input:

- PDM microphone signals (data, clock) will be connected to DFSDM input serial channel y (DATINy, CKOUT) pins.
- Channel y will be configured: CHINSEL = 0 (input from given channel pins: DATINy, CKINy).
- Channel (y-1) (modulo 8) will be configured: CHINSEL = 1 (input from the following channel ((y-1)+1) pins: DATINy, CKINy).
- Channel y: SITP[1:0] = 0 (rising edge to strobe data) => left audio channel on channel y.
- Channel (y-1): SITP[1:0] = 1 (falling edge to strobe data) => right audio channel on channel y-1.
- Two DFSDM filters will be assigned to channel y and channel (y-1) (to filter left and right channels from PDM microphone).

Figure 164. Input channel pins redirection

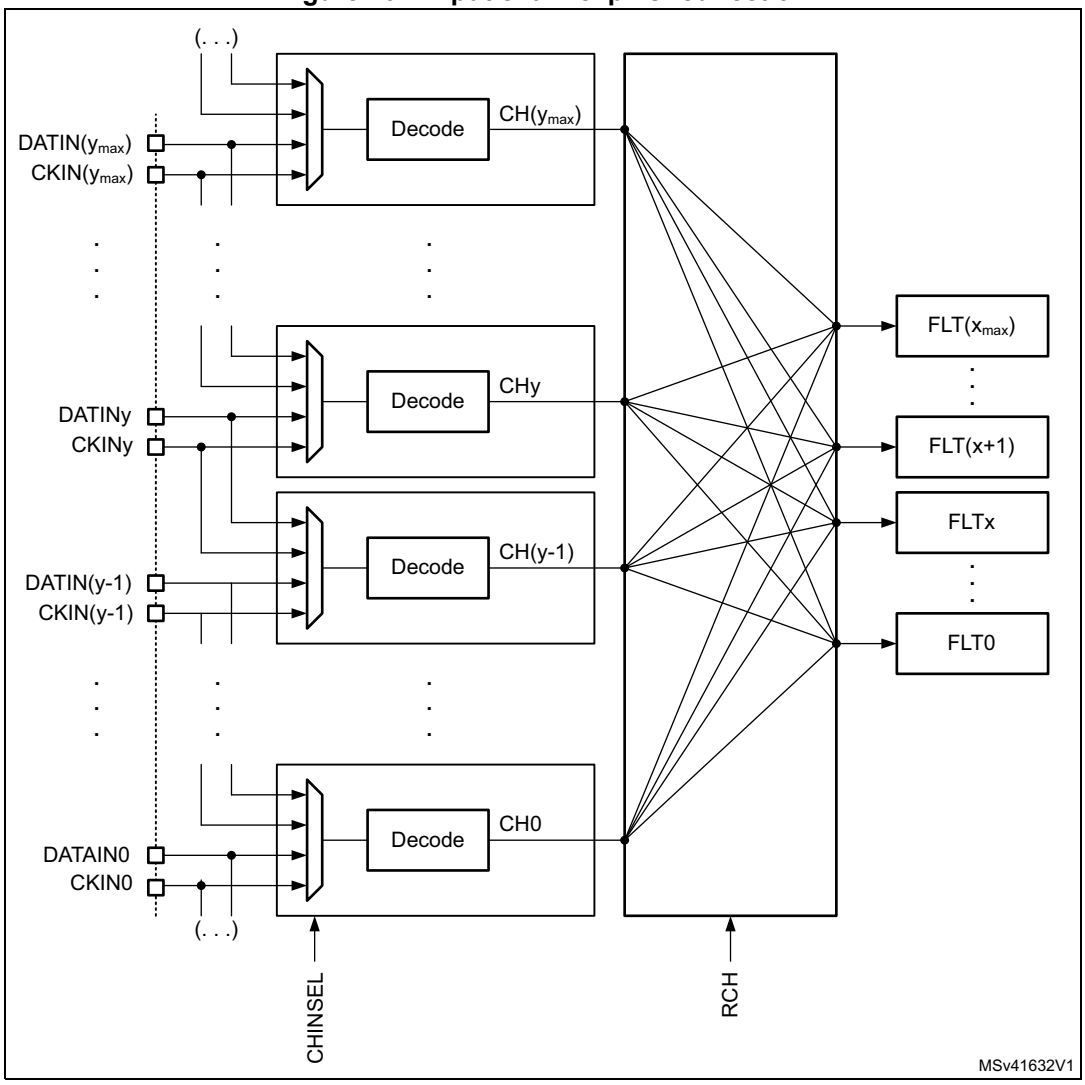

Output clock generation

A clock signal can be provided on CKOUT pin to drive external ΣΔ modulator clock inputs. The frequency of this CKOUT signal is derived from DFSDM clock or from audio clock (see CKOUTSRC bit in DFSDM_CH0CFGR1 register) divided by a predivider (see CKOUTDIV bits in DFSDM_CH0CFGR1 register). If the output clock is stopped, then CKOUT signal is set to low state (output clock can be stopped by CKOUTDIV=0 in DFSDM_CHyCFGR1 register or by DFSDMEN=0 in DFSDM_CH0CFGR1 register). The output clock stopping is performed:

- 4 system clocks after DFSDMEN is cleared (if CKOUTSRC=0)
- 1 system clock and 3 audio clocks after DFSDMEN is cleared (if CKOUTSRC=1)

Before changing CKOUTSRC the software has to wait for CKOUT being stopped to avoid glitch on CKOUT pin. The output clock signal frequency must be in the range 0 - 20 MHz.

SPI data input format operation

In SPI format, the data stream is sent in serial format through data and clock signals. Data signal is always provided from DATINy pin. A clock signal can be provided externally from CKINy pin or internally from a signal derived from the CKOUT signal source.

In case of external clock source selection (SPICKSEL[1:0]=0) data signal (on DATINy pin) is sampled on rising or falling clock edge (of CKINy pin) according SITP[1:0] bits setting (in DFSDM_CHyCFGR1 register).

Internal clock sources - see SPICKSEL[1:0] in DFSDM_CHyCFGR1 register:

- CKOUT signal:
  - For connection to external ΣΔ modulator which uses directly its clock input (from CKOUT) to generate its output serial communication clock.
  - Sampling point: on rising/falling edge according SITP[1:0] setting.
- CKOUT/2 signal (generated on CKOUT rising edge):
  - For connection to external ΣΔ modulator which divides its clock input (from CKOUT) by 2 to generate its output serial communication clock (and this output clock change is active on each clock input rising edge).
  - Sampling point: on each second CKOUT falling edge.
- CKOUT/2 signal (generated on CKOUT falling edge):
  - For connection to external ΣΔ modulator which divides its clock input (from CKOUT) by 2 to generate its output serial communication clock (and this output clock change is active on each clock input falling edge).
  - Sampling point: on each second CKOUT rising edge.

Note: An internal clock source can only be used when the external ΣΔ modulator uses CKOUT signal as a clock input (to have synchronous clock and data operation).

Internal clock source usage can save CKINy pin connection (CKINy pins can be used for other purpose).

The clock source signal frequency must be in the range 0 - 20 MHz for SPI coding and less than $f_{DFSDMCLK}/4$.

Manchester coded data input format operation

In Manchester coded format, the data stream is sent in serial format through DATINy pin only. Decoded data and clock signal are recovered from serial stream after Manchester

decoding. There are two possible settings of Manchester codings (see SITP[1:0] bits in DFSDM_CHyCFGR1 register):

- signal rising edge = log 0; signal falling edge = log 1
- signal rising edge = log 1; signal falling edge = log 0

The recovered clock signal frequency for Manchester coding must be in the range 0 - 10 MHz and less than $f_{DFSDMCLK}/6$.

To correctly receive Manchester coded data, the CKOUTDIV divider (in DFSDM_CH0CFGR1 register) must be set with respect to expected Manchester data rate according formula:

$$((CKOUTDIV + 1) \times T_{SYSCLK}) < T_{Manchester\ clock} < (2 \times CKOUTDIV \times T_{SYSCLK})$$

Figure 165. Channel transceiver timing diagrams

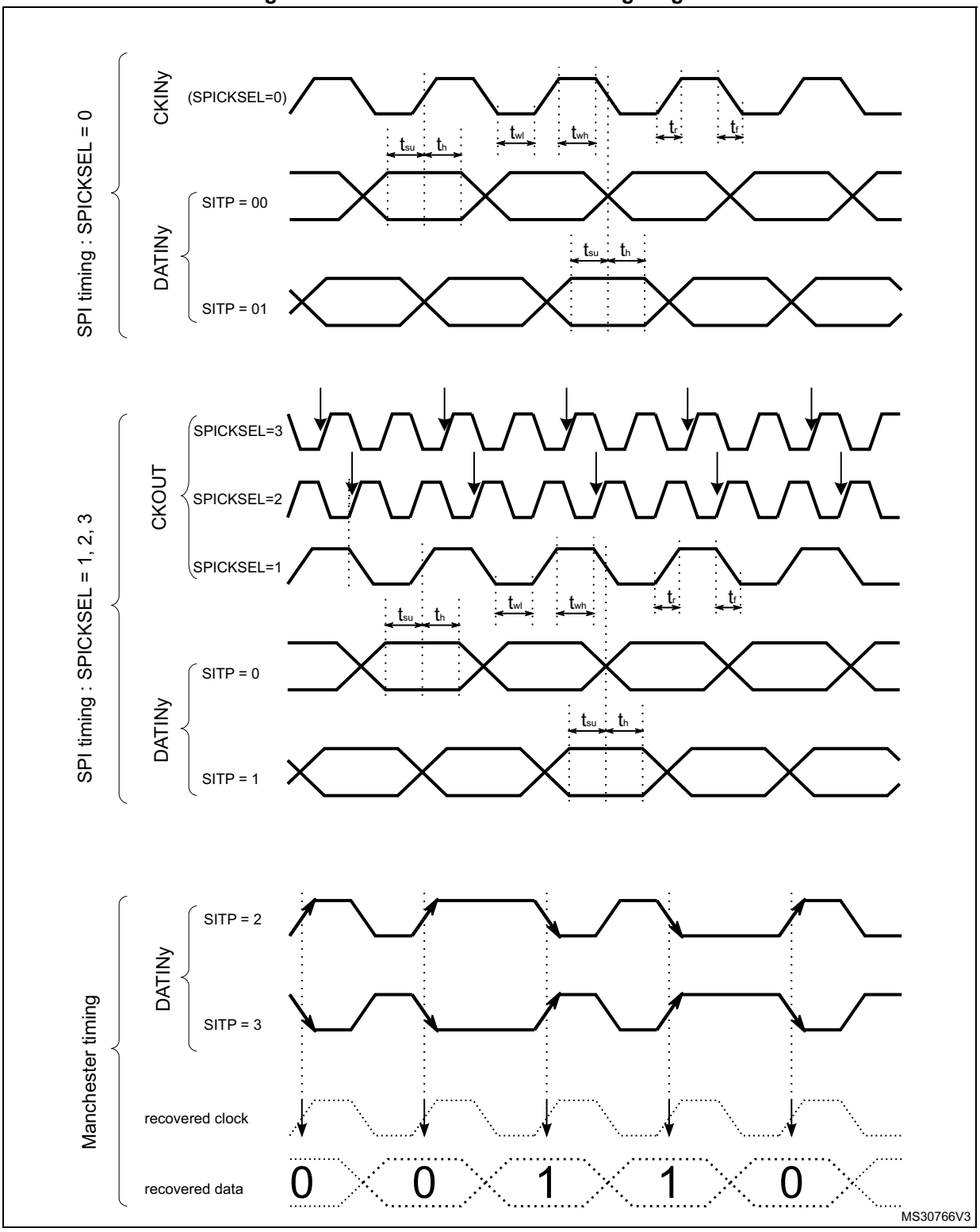

Clock absence detection

Channels serial clock inputs can be checked for clock absence/presence to ensure the correct operation of conversion and error reporting. Clock absence detection can be enabled or disabled on each input channel y by bit CKABEN in DFSDM_CHyCFGR1 register. If enabled, then this clock absence detection is performed continuously on a given channel. A clock absence flag is set (CKABF[y] = 1) and an interrupt can be invoked (if CKABIE=1) in case of an input clock error (see CKABF[7:0] in DFSDM_FLT0ISR register and CKABEN in DFSDM_CHyCFGR1). After a clock absence flag clearing (by CLRCKABF in DFSDM_FLT0ICR register), the clock absence flag is refreshed. Clock absence status bit CKABF[y] is set also by hardware when corresponding channel y is disabled (if CHEN[y] = 0 then CKABF[y] is held in set state).

When a clock absence event has occurred, the data conversion (and/or analog watchdog and short-circuit detector) provides incorrect data. The user should manage this event and discard given data while a clock absence is reported.

The clock absence feature is available only when the system clock is used for the CKOUT signal (CKOUTSRC=0 in DFSDM_CH0CFGR1 register).

When the transceiver is not yet synchronized, the clock absence flag is set and cannot be cleared by CLRCKABF[y] bit (in DFSDM_FLT0ICR register). The software sequence concerning clock absence detection feature should be:

- Enable given channel by CHEN = 1
- Try to clear the clock absence flag (by CLRCKABF = 1) until the clock absence flag is really cleared (CKABF = 0). At this time, the transceiver is synchronized (signal clock is valid) and is able to receive data.
- Enable the clock absence feature CKABEN = 1 and the associated interrupt CKABIE = 1 to detect if the SPI clock is lost or Manchester data edges are missing.

If SPI data format is used, then the clock absence detection is based on the comparison of an external input clock with an output clock generation (CKOUT signal). The external input clock signal into the input channel must be changed at least once per 8 signal periods of CKOUT signal (which is controlled by CKOUTDIV field in DFSDM_CH0CFGR1 register).

Figure 166. Clock absence timing diagram for SPI

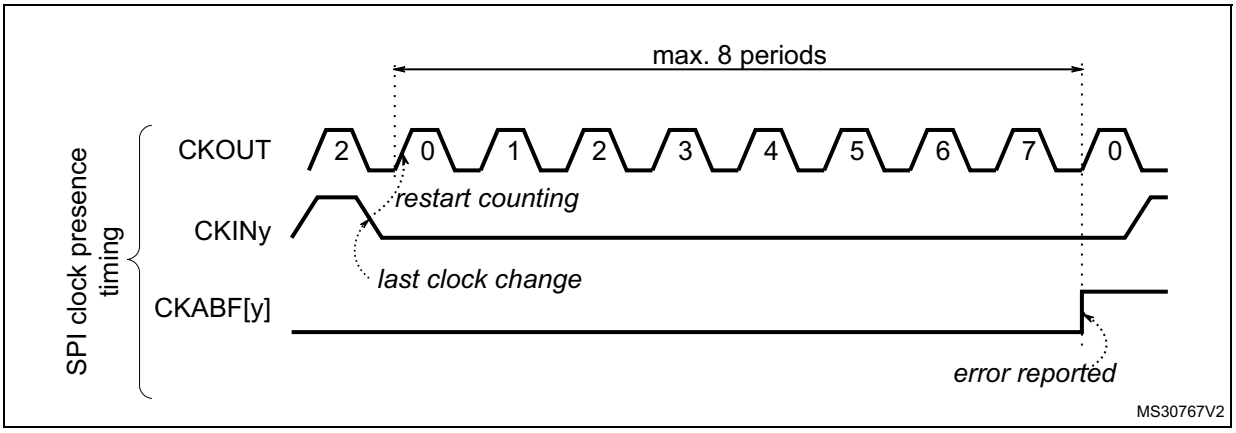

If Manchester data format is used, then the clock absence means that the clock recovery is unable to perform from Manchester coded signal. For a correct clock recovery, it is first necessary to receive data with 1 to 0 or 0 to 1 transition (see *Figure 168* for Manchester synchronization).

The detection of a clock absence in Manchester coding (after a first successful synchronization) is based on changes comparison of coded serial data input signal with output clock generation (CKOUT signal). There must be a voltage level change on DATINy pin during 2 periods of CKOUT signal (which is controlled by CKOUTDIV bits in DFSDM_CH0CFGR1 register). This condition also defines the minimum data rate to be able to correctly recover the Manchester coded data and clock signals.

The maximum data rate of Manchester coded data must be less than the CKOUT signal.

So to correctly receive Manchester coded data, the CKOUTDIV divider must be set according the formula:

$$((CKOUTDIV + 1) \times T_{SYSCLK}) < T_{Manchester\ clock} < (2 \times CKOUTDIV \times T_{SYSCLK})$$

A clock absence flag is set (CKABF[y] = 1) and an interrupt can be invoked (if CKABIE=1) in case of an input clock recovery error (see CKABF[7:0] in DFSDM_FLT0ISR register and CKABEN in DFSDM_CHyCFGR1). After a clock absence flag clearing (by CLRCKABF in DFSDM_FLT0ICR register), the clock absence flag is refreshed.

Figure 167. Clock absence timing diagram for Manchester coding

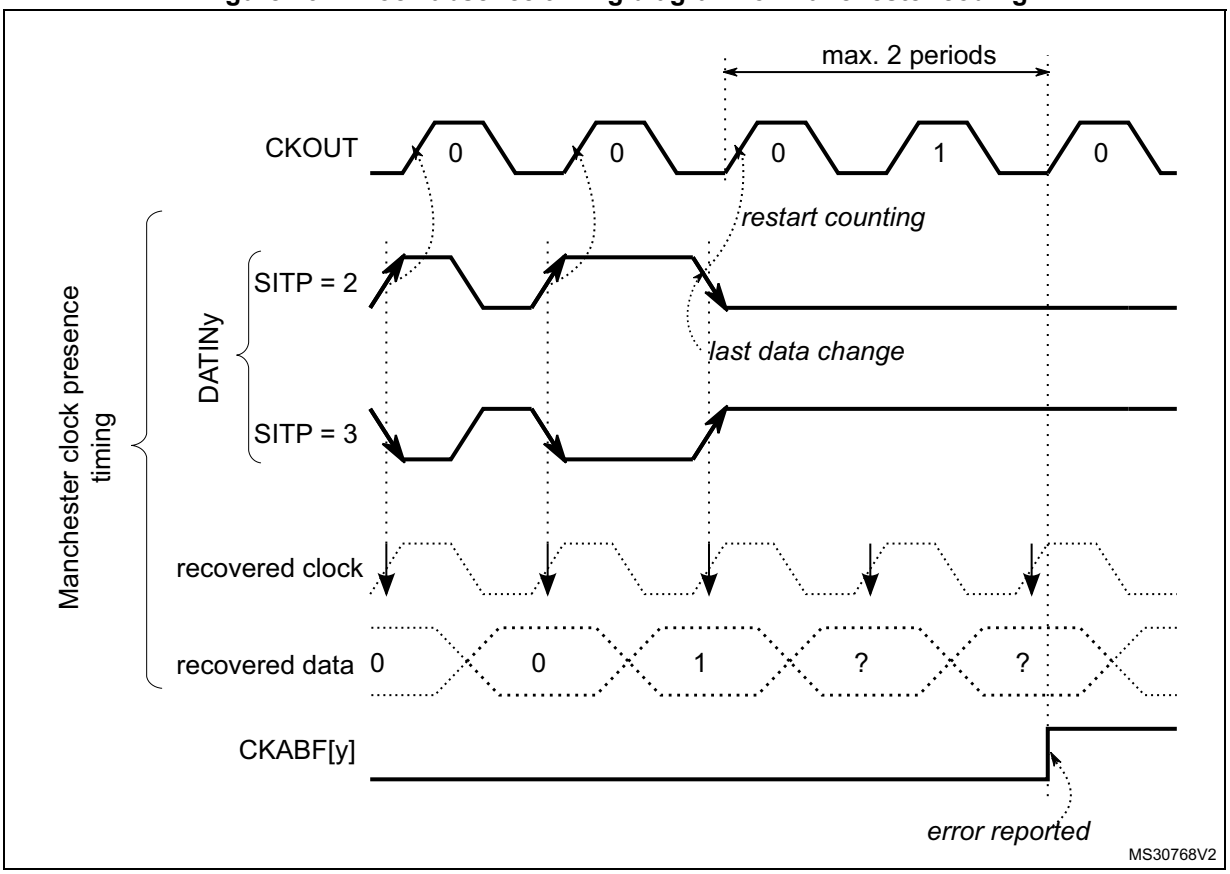

Manchester/SPI code synchronization

The Manchester coded stream must be synchronized the first time after enabling the channel (CHEN=1 in DFSDM_CHyCFGR1 register). The synchronization ends when a data transition from 0 to 1 or from 1 to 0 (to be able to detect valid data edge) is received. The end of the synchronization can be checked by polling CKABF[y]=0 for a given channel after it has been cleared by CLRCKABF[y] in DFSDM_FLT0ICR, following the software sequence detailed hereafter:

CKABF[y] flag is cleared by setting CLRCKABF[y] bit. If channel y is not yet synchronized the hardware immediately set the CKABF[y] flag. Software is then reading back the CKABF[y] flag and if it is set then perform again clearing of this flag by setting CLRCKABF[y] bit. This software sequence (polling of CKABF[y] flag) continues until CKABF[y] flag is set (signalizing that Manchester stream is synchronized). To be able to synchronize/receive Manchester coded data the CKOUTDIV divider (in DFSDM_CH0CFGR1 register) must be set with respect to expected Manchester data rate according the formula below.

$$((CKOUTDIV + 1) \times T_{SYSCLK}) < T_{Manchester\ clock} < (2 \times CKOUTDIV \times T_{SYSCLK})$$

SPI coded stream is synchronized after first detection of clock input signal (valid rising/falling edge).

Note: When the transceiver is not yet synchronized, the clock absence flag is set and cannot be cleared by CLRCKABF[y] bit (in DFSDM_FLT0ICR register).

Figure 168. First conversion for Manchester coding (Manchester synchronization)

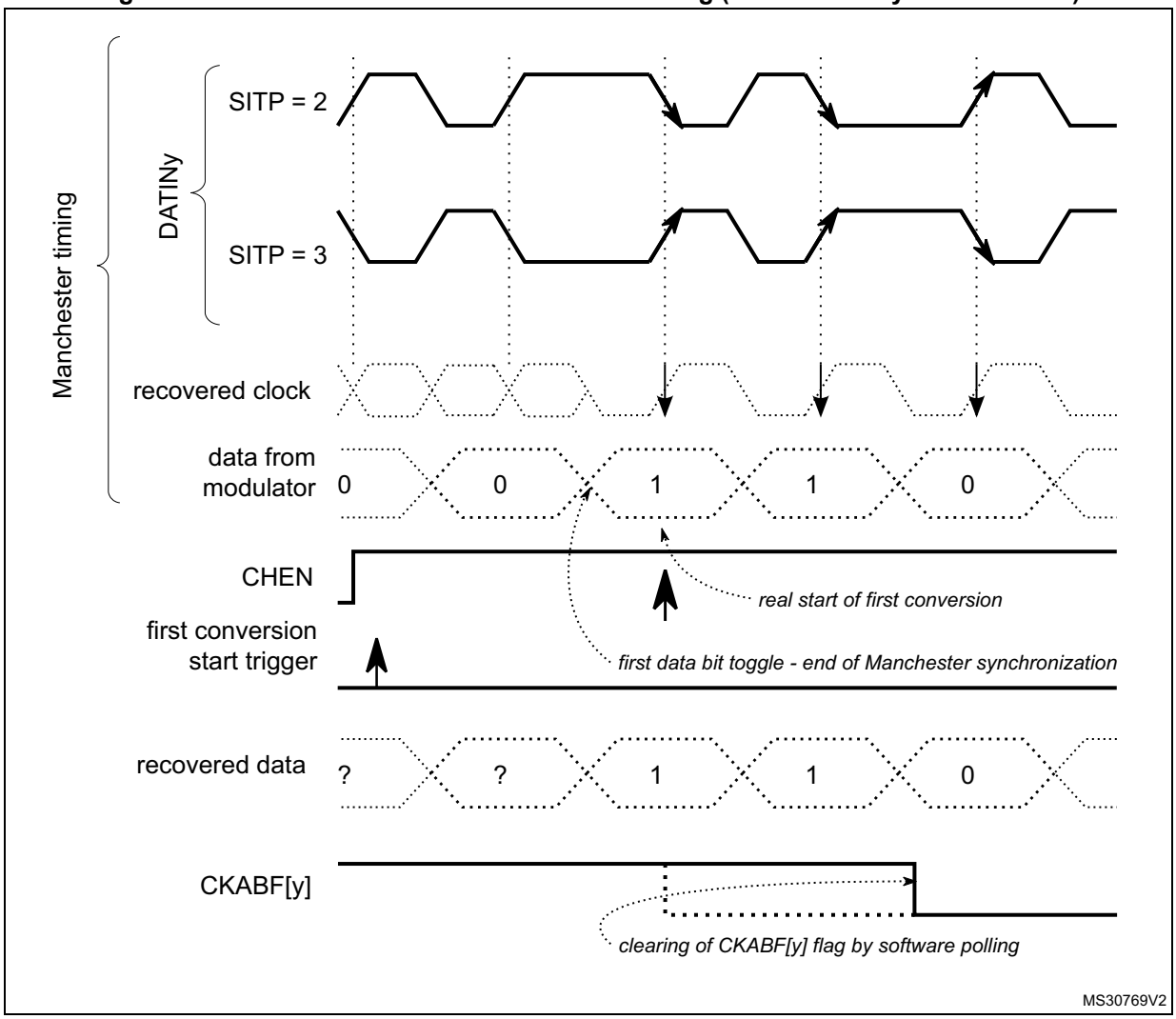

External serial clock frequency measurement

The measuring of a channel serial clock input frequency provides a real data rate from an external ΣΔ modulator, which is important for application purposes.

An external serial clock input frequency can be measured by a timer counting DFSDM clocks ($f_{DFSDMCLK}$) during one conversion duration. The counting starts at the first input data clock after a conversion trigger (regular or injected) and finishes by last input data clock before conversion ends (end of conversion flag is set). Each conversion duration (time between first serial sample and last serial sample) is updated in counter CNVCNT[27:0] in register DFSDM_FLTxCNVTIMR when the conversion finishes (JEOCF=1 or REOCF=1). The user can then compute the data rate according to the digital filter settings (FORD, FOSR, IOSR, FAST). The external serial frequency measurement is stopped only if the filter is bypassed (FOSR=0, only integrator is active, CNVCNT[27:0]=0 in DFSDM_FLTxCNVTIMR register).

In case of parallel data input (*Section 24.4.6: Parallel data inputs*) the measured frequency is the average input data rate during one conversion.

Note: When conversion is interrupted (e.g. by disabling/enabling the selected channel) the interruption time is also counted in CNVCNT[27:0]. Therefore it is recommended to not interrupt the conversion for correct conversion duration result.

Conversion times:

injected conversion or regular conversion with FAST = 0 (or first conversion if FAST=1):

for $Sinc^x$ filters (x=1..5):

$t = CNVCNT/f_{DFSDMCLK} = [F_{OSR} * (I_{OSR}-1 + F_{ORD}) + F_{ORD}] / f_{CKIN}$

for FastSinc filter:

$t = CNVCNT/f_{DFSDMCLK} = [F_{OSR} * (I_{OSR}-1 + 4) + 2] / f_{CKIN}$

regular conversion with FAST = 1 (except first conversion):

for $Sinc^x$ and FastSinc filters:

$t = CNVCNT/f_{DFSDMCLK} = [F_{OSR} * I_{OSR}] / f_{CKIN}$

in case if F_{OSR} = FOSR[9:0]+1 = 1 (filter bypassed, active only integrator):

$t = I_{OSR} / f_{CKIN}$ (... but CNVCNT=0)

where:

- f_{CKIN} is the channel input clock frequency (on given channel CKINy pin) or input data rate (in case of parallel data input)
- F_{OSR} is the filter oversampling ratio: F_{OSR} = FOSR[9:0]+1 (see DFSDM_FLTxFCR register)
- I_{OSR} is the integrator oversampling ratio: I_{OSR} = IOSR[7:0]+1 (see DFSDM_FLTxFCR register)
- F_{ORD} is the filter order: F_{ORD} = FORD[2:0] (see DFSDM_FLTxFCR register)

Channel offset setting

Each channel has its own offset setting (in register) which is finally subtracted from each conversion result (injected or regular) from a given channel. Offset correction is performed after the data right bit shift. The offset is stored as a 24-bit signed value in OFFSET[23:0] field in DFSDM_CHyCFGR2 register.

Data right bit shift

To have the result aligned to a 24-bit value, each channel defines a number of right bit shifts which will be applied on each conversion result (injected or regular) from a given channel. The data bit shift number is stored in DTRBS[4:0] bits in DFSDM_CHyCFGR2 register.

The right bit-shift is rounding the result to nearest integer value. The sign of shifted result is maintained, in order to have valid 24-bit signed format of result data.

24.4.5 Configuring the input serial interface

The following parameters must be configured for the input serial interface:

- **Output clock predivider**. There is a programmable predivider to generate the output clock from DFSDM clock (2 - 256). It is defined by CKOUTDIV[7:0] bits in DFSDM_CH0CFGR1 register.
- **Serial interface type and input clock phase.** Selection of SPI or Manchester coding and sampling edge of input clock. It is defined by SITP [1:0] bits in DFSDM_CHyCFGR1 register.
- **Input clock source.** External source from CKINy pin or internal from CKOUT pin. It is defined by SPICKSEL[1:0] field in DFSDM_CHyCFGR1 register.
- **Final data right bit-shift.** Defines the final data right bit shift to have the result aligned to a 24-bit value. It is defined by DTRBS[4:0] in DFSDM_CHyCFGR2 register.
- **Channel offset per channel.** Defines the analog offset of a given serial channel (offset of connected external ΣΔ modulator). It is defined by OFFSET[23:0] bits in DFSDM_CHyCFGR2 register.
- **short-circuit detector and clock absence per channel enable.** To enable or disable the short-circuit detector (by SCDEN bit) and the clock absence monitoring (by CKABEN bit) on a given serial channel in register DFSDM_CHyCFGR1.
- **Analog watchdog filter and short-circuit detector threshold settings.** To configure channel analog watchdog filter parameters and channel short-circuit detector parameters. Configurations are defined in DFSDM_CHyAWSCDR register.

24.4.6 Parallel data inputs

Each input channel provides a register for 16-bit parallel data input (besides serial data input). Each 16-bit parallel input can be sourced from internal data sources only:

- internal ADC results[(a)]
- direct CPU/DMA writing.

The selection for using serial or parallel data input for a given channel is done by field DATMPX[1:0] of DFSDM_CHyCFGR1 register. In DATMPX[1:0] is also defined the parallel data source: internal ADC[(a)] or direct write by CPU/DMA.

Each channel contains a 32-bit data input register DFSDM_CHyDATINR in which it can be written a 16-bit data. Data are in 16-bit signed format. Those data can be used as input to the digital filter which is accepting 16-bit parallel data.

If serial data input is selected (DATMPX[1:0] = 0), the DFSDM_CHyDATINR register is write protected.

Input from internal ADC[(a)]

In case of ADC data parallel input (DATMPX[1:0]=1) the ADC[y+1] result is assigned to channel y input (ADC1 is filling DFSDM_CHDATIN0R register, ADC2 is filling DFSDM_CHDATIN1R register, ... , ADC8 is filling DFSDM_CHDATIN7R register). End of conversion event from ADC[y+1] causes update of channel y data (parallel data from ADC[y+1] are put as next sample to digital filter). Data from ADC[y+1] is written into DFSDM_CHyDATINR register (field INDAT0[15:0]) when end of conversion event occurred.

a. Availability of the input from internal ADC is device dependent, see *Table 154: DFSDM1 implementation*.

The setting of data packing mode (DATPACK[1:0] in the DFSDM_CHyCFGR1 register) has no effect in case of ADC data input.

Note: Extension of ADC specification: in case the internal ADC is configured in interleaved mode (e.g. ADC1 together with ADC2 - see ADC specification) then each result from ADC1 or from ADC2 will come to the same 16-bit bus - to the bus of ADC1 - which is coming into DFSDM channel 0 (fixed connection). So there will be double input data rate into DFSDM channel 0 (even samples come from ADC1 and odd samples from ADC2). Channel 1 associated with ADC2 will be free.

Input from memory (direct CPU/DMA write)

The direct data write into DFSDM_CHyDATINR register by CPU or DMA (DATMPX[1:0]=2) can be used as data input in order to process digital data streams from memory or peripherals.

Data can be written by CPU or DMA into DFSDM_CHyDATINR register:

1. **CPU data write:**

   Input data are written directly by CPU into DFSDM_CHyDATINR register.

2. **DMA data write:**

   The DMA should be configured in memory-to-memory transfer mode to transfer data from memory buffer into DFSDM_CHyDATINR register. The destination memory address is the address of DFSDM_CHyDATINR register. Data are transferred at DMA transfer speed from memory to DFSDM parallel input.

   This DMA transfer is different from DMA used to read DFSDM conversion results. Both DMA can be used at the same time - first DMA (configured as memory-to-memory transfer) for input data writings and second DMA (configured as peripheral-to-memory transfer) for data results reading.

The accesses to DFSDM_CHyDATINR can be either 16-bit or 32-bit wide, allowing to load respectively one or two samples in one write operation. 32-bit input data register (DFSDM_CHyDATINR) can be filled with one or two 16-bit data samples, depending on the data packing operation mode defined in field DATPACK[1:0] of DFSDM_CHyCFGR1 register:

1. **Standard mode (DATPACK[1:0]=0):**

   Only one sample is stored in field INDAT0[15:0] of DFSDM_CHyDATINR register which is used as input data for channel y. The upper 16 bits (INDAT1[15:0]) are ignored and write protected. The digital filter must perform one input sampling (from INDAT0[15:0]) to empty data register after it has been filled by CPU/DMA. This mode is used together with 16-bit CPU/DMA access to DFSDM_CHyDATINR register to load one sample per write operation.

2. **Interleaved mode (DATPACK[1:0]=1):**

   DFSDM_CHyDATINR register is used as a two sample buffer. The first sample is stored in INDAT0[15:0] and the second sample is stored in INDAT1[15:0]. The digital filter must perform two input samplings from channel y to empty DFSDM_CHyDATINR register. This mode is used together with 32-bit CPU/DMA access to DFSDM_CHyDATINR register to load two samples per write operation.

3. **Dual mode (DATPACK[1:0]=2):**

   Two samples are written into DFSDM_CHyDATINR register. The data INDAT0[15:0] is for channel y, the data in INDAT1[15:0] is for channel y+1. The data in INDAT1[15:0] is automatically copied INDAT0[15:0] of the following (y+1) channel data register

DFSDM_CH[y+1]DATINR). The digital filters must perform two samplings - one from channel y and one from channel (y+1) - in order to empty DFSDM_CHyDATINR registers.

Dual mode setting (DATPACK[1:0]=2) is available only on even channel numbers (y = 0, 2, 4, 6). If odd channel (y = 1, 3, 5, 7) is set to Dual mode then both INDAT0[15:0] and INDAT1[15:0] parts are write protected for this channel. If even channel is set to Dual mode then the following odd channel must be set into Standard mode (DATPACK[1:0]=0) for correct cooperation with even channels.

See *Figure 169* for DFSDM_CHyDATINR registers data modes and assignments of data samples to channels.

Figure 169. DFSDM_CHyDATINR registers operation modes and assignment

Standard mode (31 … 16 / 15 … 0)		Interleaved mode (31 … 16 / 15 … 0)		Dual mode (31 … 16 / 15 … 0)		
Unused	Ch0 (sample 0)	Ch0 (sample 1)	Ch0 (sample 0)	Ch1 (sample 0)	Ch0 (sample 0)	**y = 0**
Unused	Ch1 (sample 0)	Ch1 (sample 1)	Ch1 (sample 0)	Unused	Ch1 (sample 0)	**y = 1**
Unused	Ch2 (sample 0)	Ch2 (sample 1)	Ch2 (sample 0)	Ch3 (sample 0)	Ch2 (sample 0)	**y = 2**
Unused	Ch3 (sample 0)	Ch3 (sample 1)	Ch3 (sample 0)	Unused	Ch3 (sample 0)	**y = 3**
Unused	Ch4 (sample 0)	Ch4 (sample 1)	Ch4 (sample 0)	Ch5 (sample 0)	Ch4 (sample 0)	**y = 4**
Unused	Ch5 (sample 0)	Ch5 (sample 1)	Ch5 (sample 0)	Unused	Ch5 (sample 0)	**y = 5**
Unused	Ch6 (sample 0)	Ch6 (sample 1)	Ch6 (sample 0)	Ch7 (sample 0)	Ch6 (sample 0)	**y = 6**
Unused	Ch7 (sample 0)	Ch7 (sample 1)	Ch7 (sample 0)	Unused	Ch7 (sample 0)	**y = 7**

MS35354V3

The write into DFSDM_CHyDATINR register to load one or two samples must be performed after the selected input channel (channel y) is enabled for data collection (starting conversion for channel y). Otherwise written data are lost for next processing.

For example: for single conversion and interleaved mode, do not start writing pair of data samples into DFSDM_CHyDATINR before the single conversion is started (any data present in the DFSDM_CHyDATINR before starting a conversion is discarded).

24.4.7 Channel selection

There are 8 multiplexed channels which can be selected for conversion using the injected channel group and/or using the regular channel.

The **injected channel group** is a selection of any or all of the 8 channels. JCHG[7:0] in the DFSDM_FLTxJCHGR register selects the channels of the injected group, where JCHG[y]=1 means that channel y is selected.

Injected conversions can operate in scan mode (JSCAN=1) or single mode (JSCAN=0). In scan mode, each of the selected channels is converted, one after another. The lowest channel (channel 0, if selected) is converted first, followed immediately by the next higher channel until all the channels selected by JCHG[7:0] have been converted. In single mode (JSCAN=0), only one channel from the selected channels is converted, and the channel selection is moved to the next channel. Writing to JCHG[7:0] if JSCAN=0 resets the channel selection to the lowest selected channel.

Injected conversions can be launched by software or by a trigger. They are never interrupted by regular conversions.

The **regular channel** is a selection of just one of the 8 channels. RCH[2:0] in the DFSDM_FLTxCR1 register indicates the selected channel.

Regular conversions can be launched only by software (not by a trigger). A sequence of continuous regular conversions is temporarily interrupted when an injected conversion is requested.

Performing a conversion on a disabled channel (CHEN=0 in DFSDM_CHyCFGR1 register) causes that the conversion will never end - because no input data is provided (with no clock signal). In this case, it is necessary to enable a given channel (CHEN=1 in DFSDM_CHyCFGR1 register) or to stop the conversion by DFEN=0 in DFSDM_FLTxCR1 register.

24.4.8 Digital filter configuration

DFSDM contains a $Sinc^x$ type digital filter implementation. This $Sinc^x$ filter performs an input digital data stream filtering, which results in decreasing the output data rate (decimation) and increasing the output data resolution. The $Sinc^x$ digital filter is configurable in order to reach the required output data rates and required output data resolution. The configurable parameters are:

- Filter order/type: (see FORD[2:0] bits in DFSDM_FLTxFCR register):
  - FastSinc
  - $Sinc^1$
  - $Sinc^2$
  - $Sinc^3$
  - $Sinc^4$
  - $Sinc^5$
- Filter oversampling/decimation ratio (see FOSR[9:0] bits in DFSDM_FLTxFCR register):
  - FOSR = 1-1024 - for FastSinc filter and $Sinc^x$ filter x = F_{ORD} = 1..3
  - FOSR = 1-215 - for $Sinc^x$ filter x = F_{ORD} = 4
  - FOSR = 1-73 - for $Sinc^x$ filter x = F_{ORD} = 5

The filter has the following transfer function (impulse response in H domain):

- $Sinc^x$ filter type: $$H(z) = \left(\frac{1 - z^{-FOSR}}{1 - z^{-1}}\right)^x$$
- FastSinc filter type: $$H(z) = \left(\frac{1 - z^{-FOSR}}{1 - z^{-1}}\right)^2 \cdot (1 + z^{-(2 \cdot FOSR)})$$

Figure 170. Example: Sinc^3 filter response

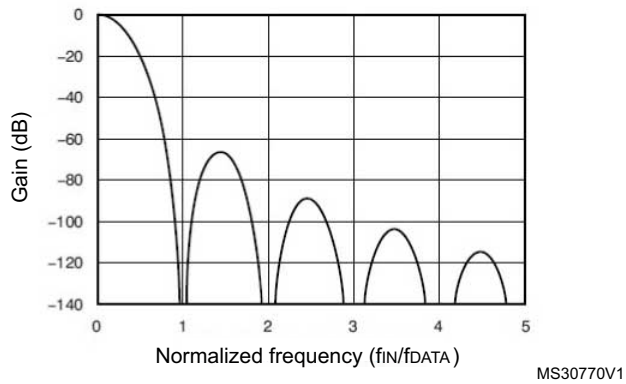

Table 159. Filter maximum output resolution (peak data values from filter output) for some FOSR values

FOSR	Sinc^1	Sinc^2	FastSinc	Sinc^3	Sinc^4	Sinc^5
x	+/- x	+/- x^2	+/- $2x^2$	+/- x^3	+/- x^4	+/- x^5
4	+/- 4	+/- 16	+/- 32	+/- 64	+/- 256	+/- 1024
8	+/- 8	+/- 64	+/- 128	+/- 512	+/- 4096	-
32	+/- 32	+/- 1024	+/- 2048	+/- 32768	+/- 1048576	+/- 33554432
64	+/- 64	+/- 4096	+/- 8192	+/- 262144	+/- 16777216	+/- 1073741824
128	+/- 128	+/- 16384	+/- 32768	+/- 2097152	+/- 268435456	Result can overflow on full scale input (> 32-bit signed integer)
256	+/- 256	+/- 65536	+/- 131072	+/- 16777216		
1024	+/- 1024	+/- 1048576	+/- 2097152	+/- 1073741824		

For more information about Sinc filter type properties and usage, it is recommended to study the theory about digital filters (more resources can be downloaded from internet).

24.4.9 Integrator unit

The integrator performs additional decimation and a resolution increase of data coming from the digital filter. The integrator simply performs the sum of data from a digital filter for a given number of data samples from a filter.

The integrator oversampling ratio parameter defines how many data counts will be summed to one data output from the integrator. IOSR can be set in the range 1-256 (see IOSR[7:0] bits description in DFSDM_FLTxFCR register).

Table 160. Integrator maximum output resolution (peak data values from integrator output) for some IOSR values and FOSR = 256 and $Sinc^3$ filter type (largest data)

IOSR	$Sinc^1$	$Sinc^2$	FastSinc	$Sinc^3$	$Sinc^4$	$Sinc^5$
x	+/- FOSR. x	+/- $FOSR^2$. x	+/- 2.$FOSR^2$. x	+/- $FOSR^3$. x	+/- $FOSR^4$. x	+/- $FOSR^5$. x
4	-	-	-	+/- 67 108 864	-	-
32	-	-	-	+/- 536 870 912	-	-
128	-	-	-	+/- 2 147 483 648	-	-
256	-	-	-	+/- 2^{32}	-	-

24.4.10 Analog watchdog

The analog watchdog purpose is to trigger an external signal (break or interrupt) when an analog signal reaches or crosses given maximum and minimum threshold values. An interrupt/event/break generation can then be invoked.

Each analog watchdog will supervise serial data receiver outputs (after the analog watchdog filter on each channel) or data output register (current injected or regular conversion result) according to AWFSEL bit setting (in DFSDM_FLTxCR1 register). The input channels to be monitored or not by the analog watchdog x will be selected by AWDCH[7:0] in DFSDM_FLTxCR2 register.

Analog watchdog conversions on input channels are independent from standard conversions. In this case, the analog watchdog uses its own filters and signal processing on each input channel independently from the main injected or regular conversions. Analog watchdog conversions are performed in a continuous mode on the selected input channels in order to watch channels also when main injected or regular conversions are paused (RCIP = 0, JCIP = 0).

There are high and low threshold registers which are compared with given data values (set by AWHT[23:0] bits in DFSDM_FLTxAWHTR register and by AWLT[23:0] bits in DFSDM_FLTxAWLTR register).

There are 2 options for comparing the threshold registers with the data values

- Option1: in this case, the input data are taken from final output data register (AWFSEL=0). This option is characterized by:
  - high input data resolution (up to 24-bits)
  - slow response time - inappropriate for fast response applications like overcurrent detection
  - for the comparison the final data are taken after bit shifting and offset data correction
  - final data are available only after main regular or injected conversions are performed
  - can be used in case of parallel input data source (DATMPX[1:0] ≠ 0 in DFSDM_CHyCFGR1 register)
- Option2: in this case, the input data are taken from any serial data receivers output (AWFSEL=1). This option is characterized by:
  - input serial data are processed by dedicated analog watchdog $Sinc^x$ channel filters with configurable oversampling ratio (1..32) and filter order (1..3) (see AWFOSR[4:0] and AWFORD[1:0] bits setting in DFSDM_CHyAWSCDR register)
  - lower resolution (up to 16-bit)
  - fast response time - appropriate for applications which require a fast response like overcurrent/overvoltage detection)
  - data are available in continuous mode independently from main regular or injected conversions activity

In case of input channels monitoring (AWFSEL=1), the data for comparison to threshold is taken from channels selected by AWDCH[7:0] field (DFSDM_FLTxCR2 register). Each of the selected channels filter result is compared to one threshold value pair (AWHT[23:0] / AWLT[23:0]). In this case, only higher 16 bits (AWHT[23:8] / AWLT[23:8]) define the 16-bit threshold compared with the analog watchdog filter output because data coming from the analog watchdog filter is up to a 16-bit resolution. Bits AWHT[7:0] / AWLT[7:0] are not taken into comparison in this case (AWFSEL=1).

Parameters of the analog watchdog filter configuration for each input channel are set in DFSDM_CHyAWSCDR register (filter order AWFORD[1:0] and filter oversampling ratio AWFOSR[4:0]).

Each input channel has its own comparator which compares the analog watchdog data (from analog watchdog filter) with analog watchdog threshold values (AWHT/AWLT). When several channels are selected (field AWDCH[7:0] field of DFSDM_FLTxCR2 register), several comparison requests may be received simultaneously. In this case, the channel request with the lowest number is managed first and then continuing to higher selected channels. For each channel, the result can be recorded in a separate flag (fields AWHTF[7:0], AWLTF[7:0] of DFSDM_FLTxAWSR register). Each channel request is executed in 8 DFSDM clock cycles. So, the bandwidth from each channel is limited to 8 DFSDM clock cycles (if AWDCH[7:0] = 0xFF). Because the maximum input channel sampling clock frequency is the DFSDM clock frequency divided by 4, the configuration AWFOSR = 0 (analog watchdog filter is bypassed) cannot be used for analog watchdog feature at this input clock speed. Therefore user must properly configure the number of watched channels and analog watchdog filter parameters with respect to input sampling clock speed and DFSDM frequency.

Analog watchdog filter data for given channel y is available for reading by firmware on field WDATA[15:0] in DFSDM_CHyWDATR register. That analog watchdog filter data is converted continuously (if CHEN=1 in DFSDM_CHyCFGR1 register) with the data rate given by the analog watchdog filter setting and the channel input clock frequency.

The analog watchdog filter conversion works like a regular Fast Continuous Conversion without the intergator. The number of serial samples needed for one result from analog watchdog filter output (at channel input clock frequency f_{CKIN}):

first conversion:

for $Sinc^x$ filters (x=1..5): number of samples = [F_{OSR} * F_{ORD} + F_{ORD} + 1]

for FastSinc filter: number of samples = [F_{OSR} * 4 + 2 + 1]

next conversions:

for $Sinc^x$ and FastSinc filters: number of samples = [FOSR * IOSR]

where:

F_{OSR} ..... filter oversampling ratio: F_{OSR} = AWFOSR[4:0]+1 (see DFSDM_CHyAWSCDR register)

F_{ORD} ..... the filter order: F_{ORD} = AWFORD[1:0] (see DFSDM_CHyAWSCDR register)

In case of output data register monitoring (AWFSEL=0), the comparison is done after a right bit shift and an offset correction of final data (see OFFSET[23:0] and DTRBS[4:0] fields in DFSDM_CHyCFGR2 register). A comparison is performed after each injected or regular end of conversion for the channels selected by AWDCH[7:0] field (in DFSDM_FLTxCR2 register).

The status of an analog watchdog event is signalized in DFSDM_FLTxAWSR register where a given event is latched. AWHTF[y]=1 flag signalizes crossing AWHT[23:0] value on channel y. AWLTF[y]=1 flag signalizes crossing AWLT[23:0] value on channel y. Latched events in DFSDM_FLTxAWSR register are cleared by writing ‘1’ into the corresponding clearing bit CLRAWHTF[y] or CLRAWLTF[y] in DFSDM_FLTxAWCFR register.

The global status of an analog watchdog is signalized by the AWDF flag bit in DFSDM_FLTxISR register (it is used for the fast detection of an interrupt source). AWDF=1 signalizes that at least one watchdog occurred (AWHTF[y]=1 or AWLTF[y]=1 for at least one channel). AWDF bit is cleared when all AWHTF[7:0] and AWLTF[7:0] are cleared.

An analog watchdog event can be assigned to break output signal. There are four break outputs to be assigned to a high or low threshold crossing event (dfsdm_break[3:0]). The break signal assignment to a given analog watchdog event is done by BKAWH[3:0] and BKAWL[3:0] fields in DFSDM_FLTxAWHTR and DFSDM_FLTxAWLTR register.

24.4.11 Short-circuit detector

The purpose of a short-circuit detector is to signalize with a very fast response time if an analog signal reached saturated values (out of full scale ranges) and remained on this value given time. This behavior can detect short-circuit or open circuit errors (e.g. overcurrent or overvoltage). An interrupt/event/break generation can be invoked.

Input data into a short-circuit detector is taken from channel transceiver outputs.

There is an upcounting counter on each input channel which is counting consecutive 0’s or 1’s on serial data receiver outputs. A counter is restarted if there is a change in the data stream received - 1 to 0 or 0 to 1 change of data signal. If this counter reaches a short-circuit threshold register value (SCDT[7:0] bits in DFSDM_CHyAWSCDR register), then a short-

circuit event is invoked. Each input channel has its short-circuit detector. Any channel can be selected to be continuously monitored by setting the SCDEN bit (in DFSDM_CHyCFGR1 register) and it has its own short-circuit detector settings (threshold value in SCDT[7:0] bits, status bit SCDF[7:0], status clearing bits CLRSCDF[7:0]). Status flag SCDF[y] is cleared also by hardware when corresponding channel y is disabled (CHEN[y] = 0).

On each channel, a short-circuit detector event can be assigned to break output signal dfsdm_break[3:0]. There are four break outputs to be assigned to a short-circuit detector event. The break signal assignment to a given channel short-circuit detector event is done by BKSCD[3:0] field in DFSDM_CHyAWSCDR register.

Short circuit detector cannot be used in case of parallel input data channel selection (DATMPX[1:0] ≠ 0 in DFSDM_CHyCFGR1 register).

Four break outputs are totally available (shared with the analog watchdog function).

24.4.12 Extreme detector

The purpose of an extremes detector is to collect the minimum and maximum values of final output data words (peak to peak values).

If the output data word is higher than the value stored in the extremes detector maximum register (EXMAX[23:0] bits in DFSDM_FLTxEXMAX register), then this register is updated with the current output data word value and the channel from which the data is stored is in EXMAXCH[2:0] bits (in DFSDM_FLTxEXMAX register) .

If the output data word is lower than the value stored in the extremes detector minimum register (EXMIN[23:0] bits in DFSDM_FLTxEXMIN register), then this register is updated with the current output data word value and the channel from which the data is stored is in EXMINCH[2:0] bits (in DFSDM_FLTxEXMIN register).

The minimum and maximum register values can be refreshed by software (by reading given DFSDM_FLTxEXMAX or DFSDM_FLTxEXMIN register). After refresh, the extremes detector minimum data register DFSDM_FLTxEXMIN is filled with 0x7FFFFF (maximum positive value) and the extremes detector maximum register DFSDM_FLTxEXMAX is filled with 0x800000 (minimum negative value).

The extremes detector performs a comparison after a right bit shift and an offset data correction. For each extremes detector, the input channels to be considered into computing the extremes value are selected in EXCH[7:0] bits (in DFSDM_FLTxCR2 register).

24.4.13 Data unit block

The data unit block is the last block of the whole processing path: External ΣΔ modulators - Serial transceivers - Sinc filter - Integrator - Data unit block.

The output data rate depends on the serial data stream rate, and filter and integrator settings. The maximum output data rate is:

$$\text{Datarate}\lceil \text{samples}/\text{s} \rceil = \frac{f_{CKIN}}{F_{OSR} \cdot (I_{OSR} - 1 + F_{ORD}) + (F_{ORD} + 1)} \quad \text{...FAST = 0, Sincx filter}$$

$$\text{Datarate}\lceil \text{samples}/\text{s} \rceil = \frac{f_{CKIN}}{F_{OSR} \cdot (I_{OSR} - 1 + 4) + (2 + 1)} \quad \text{...FAST = 0, FastSinc filter}$$

or

$$\text{Datarate}\lceil \text{samples}/\text{s}\rceil = \frac{f_{CKIN}}{F_{OSR} \cdot I_{OSR}} \quad \text{...FAST = 1}$$

Maximum output data rate in case of parallel data input:

$$\text{Datarate}\lceil \text{samples}/\text{s}\rceil = \frac{f_{DATAIN_RATE}}{F_{OSR} \cdot (I_{OSR} - 1 + F_{ORD}) + (F_{ORD} + 1)} \quad \text{...FAST = 0, Sincx filter}$$

or

$$\text{Datarate}\lceil \text{samples}/\text{s}\rceil = \frac{f_{DATAIN_RATE}}{F_{OSR} \cdot (I_{OSR} - 1 + 4) + (2 + 1)} \quad \text{...FAST = 0, FastSinc filter}$$

or

$$\text{Datarate}\lceil \text{samples}/\text{s}\rceil = \frac{f_{DATAIN_RATE}}{F_{OSR} \cdot I_{OSR}} \quad \text{...FAST=1 or any filter bypass case } (F_{OSR} = 1)$$

where: f_{DATAIN_RATE}...input data rate from ADC or from CPU/DMA

Note: Availability of the input from internal ADC is device dependent, see *Table 154: DFSDM1 implementation*.

The right bit-shift of final data is performed in this module because the final data width is 24-bit and data coming from the processing path can be up to 32 bits. This right bit-shift is configurable in the range 0-31 bits for each selected input channel (see DTRBS[4:0] bits in DFSDM_CHyCFGR2 register). The right bit-shift is rounding the result to nearest integer value. The sign of shifted result is maintained - to have valid 24-bit signed format of result data.

In the next step, an offset correction of the result is performed. The offset correction value (OFFSET[23:0] stored in register DFSDM_CHyCFGR2) is subtracted from the output data for a given channel. Data in the OFFSET[23:0] field is set by software by the appropriate calibration routine.

Due to the fact that all operations in digital processing are performed on 32-bit signed registers, the following conditions must be fulfilled not to overflow the result:

$FOSR^{FORD} \cdot IOSR <= 2^{31}$ ... for $Sinc^x$ filters, x = 1..5)
$2 \cdot FOSR^{2} \cdot IOSR <= 2^{31}$ ... for FastSinc filter)

Note: *In case of filter and integrator bypass (IOSR[7:0]=0, FOSR[9:0]=0), the input data rate (f_{DATAIN_RATE}) must be limited to be able to read all output data:*
$f_{DATAIN_RATE} \leq f_{APB}$
where f_{APB} is the bus frequency to which the DFSDM peripheral is connected.

24.4.14 Signed data format

Each DFSDM input serial channel can be connected to one external ΣΔ modulator. An external ΣΔ modulator can have 2 differential inputs (positive and negative) which can be used for a differential or single-ended signal measurement.

A ΣΔ modulator output is always assumed in a signed format (a data stream of zeros and ones from a ΣΔ modulator represents values -1 and +1).

Signed data format in registers: Data is in a signed format in registers for final output data, analog watchdog, extremes detector, offset correction. The msb of output data word represents the sign of value (two's complement format).

24.4.15 Launching conversions

Injected conversions can be launched using the following methods:

- Software: writing '1' to JSWSTART in the DFSDM_FLTxCR1 register.
- Trigger: JEXTSEL[2:0] selects the trigger signal while JEXTEN activates the trigger and selects the active edge at the same time (see the DFSDM_FLTxCR1 register).
- Synchronous with DFSDM_FLT0 if JSYNC=1: for DFSDM_FLTx (x>0), an injected conversion is automatically launched when in DFSDM_FLT0; the injected conversion is started by software (JSWSTART=1 in DFSDM_FLT0CR2 register). Each injected conversion in DFSDM_FLTx (x>0) is always executed according to its local configuration settings (JSCAN, JCHG, etc.).

If the scan conversion is enabled (bit JSCAN=1) then, each time an injected conversion is triggered, all of the selected channels in the injected group (JCHG[7:0] bits in DFSDM_FLTxJCHGR register) are converted sequentially, starting with the lowest channel (channel 0, if selected).

If the scan conversion is disabled (bit JSCAN=0) then, each time an injected conversion is triggered, only one of the selected channels in the injected group (JCHG[7:0] bits in DFSDM_FLTxJCHGR register) is converted and the channel selection is then moved to the next selected channel. Writing to the JCHG[7:0] bits when JSCAN=0 sets the channel selection to the lowest selected injected channel.

Only one injected conversion can be ongoing at a given time. Thus, any request to launch an injected conversion is ignored if another request for an injected conversion has already been issued but not yet completed.

Regular conversions can be launched using the following methods:

- Software: by writing '1' to RSWSTART in the DFSDM_FLTxCR1 register.
- Synchronous with DFSDM_FLT0 if RSYNC=1: for DFSDM_FLTx (x>0), a regular conversion is automatically launched when in DFSDM_FLT0; a regular conversion is started by software (RSWSTART=1 in DFSDM_FLT0CR2 register). Each regular conversion in DFSDM_FLTx (x>0) is always executed according to its local configuration settings (RCONT, RCH, etc.).

Only one regular conversion can be pending or ongoing at a given time. Thus, any request to launch a regular conversion is ignored if another request for a regular conversion has already been issued but not yet completed. A regular conversion can be pending if it was interrupted by an injected conversion or if it was started while an injected conversion was in progress. This pending regular conversion is then delayed and is performed when all injected conversion are finished. Any delayed regular conversion is signalized by RPEND bit in DFSDM_FLTxRDATAR register.

24.4.16 Continuous and fast continuous modes

Setting RCONT in the DFSDM_FLTxCR1 register causes regular conversions to execute in continuous mode. RCONT=1 means that the channel selected by RCH[2:0] is converted repeatedly after ‘1’ is written to RSWSTART.

The regular conversions executing in continuous mode can be stopped by writing ‘0’ to RCONT. After clearing RCONT, the on-going conversion is stopped immediately.

In continuous mode, the data rate can be increased by setting the FAST bit in the DFSDM_FLTxCR1 register. In this case, the filter does not need to be refilled by new fresh data if converting continuously from one channel because data inside the filter is valid from previously sampled continuous data. The speed increase depends on the chosen filter order. The first conversion in fast mode (FAST=1) after starting a continuous conversion by RSWSTART=1 takes still full time (as when FAST=0), then each subsequent conversion is finished in shorter intervals.

Conversion time in continuous mode:

if FAST = 0 (or first conversion if FAST=1):

for $Sinc^X$ filters:

$t = CNVCNT/f_{DFSDMCLK} = [F_{OSR} * (I_{OSR}-1 + F_{ORD}) + F_{ORD}] / f_{CKIN}$

for FastSinc filter:

$t = CNVCNT/f_{DFSDMCLK} = [F_{OSR} * (I_{OSR}-1 + 4) + 2] / f_{CKIN}$

if FAST = 1 (except first conversion):

for $Sinc^X$ and FastSinc filters:

$t = CNVCNT/f_{DFSDMCLK} = [F_{OSR} * I_{OSR}] / f_{CKIN}$

in case F_{OSR} = FOSR[9:0]+1 = 1 (filter bypassed, only integrator active):

$t = I_{OSR} / f_{CKIN}$ (... but CNVCNT=0)

Continuous mode is not available for injected conversions. Injected conversions can be started by timer trigger to emulate the continuous mode with precise timing.

If a regular continuous conversion is in progress (RCONT=1) and if a write access to DFSDM_FLTxCR1 register requesting regular continuous conversion (RCONT=1) is performed, then regular continuous conversion is restarted from the next conversion cycle (like new regular continuous conversion is applied for new channel selection - even if there is no change in DFSDM_FLTxCR1 register).

24.4.17 Request precedence

An injected conversion has a higher precedence than a regular conversion. A regular conversion which is already in progress is immediately interrupted by the request of an injected conversion; this regular conversion is restarted after the injected conversion finishes.

An injected conversion cannot be launched if another injected conversion is pending or already in progress: any request to launch an injected conversion (either by JSWSTART or by a trigger) is ignored as long as bit JCIP is ‘1’ (in the DFSDM_FLTxISR register).

Similarly, a regular conversion cannot be launched if another regular conversion is pending or already in progress: any request to launch a regular conversion (using RSWSTART) is ignored as long as bit RCIP is ‘1’ (in the DFSDM_FLTxISR register).

However, if an injected conversion is requested while a regular conversion is already in progress, the regular conversion is immediately stopped and an injected conversion is launched. The regular conversion is then restarted and this delayed restart is signalized in bit RPEND.

Injected conversions have precedence over regular conversions in that a injected conversion can temporarily interrupt a sequence of continuous regular conversions. When the sequence of injected conversions finishes, the continuous regular conversions start again if RCONT is still set (and RPEND bit will signalize the delayed start on the first regular conversion result).

Precedence also matters when actions are initiated by the same write to DFSDM, or if multiple actions are pending at the end of another action. For example, suppose that, while an injected conversion is in process (JCIP=1), a single write operation to DFSDM_FLTxCR1 writes ‘1’ to RSWSTART, requesting a regular conversion. When the injected sequence finishes, the precedence dictates that the regular conversion is performed next and its delayed start is signalized in RPEND bit.

24.4.18 Power optimization in run mode

In order to reduce the consumption, the DFSDM filter and integrator are automatically put into idle when not used by conversions (RCIP=0, JCIP=0).

24.5 DFSDM interrupts

In order to increase the CPU performance, a set of interrupts related to the CPU event occurrence has been implemented:

- End of injected conversion interrupt:
  - enabled by JEOCIE bit in DFSDM_FLTxCR2 register
  - indicated in JEOCF bit in DFSDM_FLTxISR register
  - cleared by reading DFSDM_FLTxJDATAR register (injected data)
  - indication of which channel end of conversion occurred, reported in JDATACH[2:0] bits in DFSDM_FLTxJDATAR register
- End of regular conversion interrupt:
  - enabled by REOCIE bit in DFSDM_FLTxCR2 register
  - indicated in REOCF bit in DFSDM_FLTxISR register
  - cleared by reading DFSDM_FLTxRDATAR register (regular data)
  - indication of which channel end of conversion occurred, reported in RDATACH[2:0] bits in DFSDM_FLTxRDATAR register[(a)]
- Data overrun interrupt for injected conversions:
  - occurred when injected converted data were not read from DFSDM_FLTxJDATAR register (by CPU or DMA) and were overwritten by a new injected conversion
  - enabled by JOVRIE bit in DFSDM_FLTxCR2 register
  - indicated in JOVRF bit in DFSDM_FLTxISR register
  - cleared by writing ‘1’ into CLRJOVRF bit in DFSDM_FLTxICR register

a. Availability of the input from internal ADC is device dependent, see *Table 154: DFSDM1 implementation*.

- Data overrun interrupt for regular conversions:
  - occurred when regular converted data were not read from DFSDM_FLTxRDATAR register (by CPU or DMA) and were overwritten by a new regular conversion
  - enabled by ROVRIE bit in DFSDM_FLTxCR2 register
  - indicated in ROVRF bit in DFSDM_FLTxISR register
  - cleared by writing ‘1’ into CLRROVRF bit in DFSDM_FLTxICR register
- Analog watchdog interrupt:
  - occurred when converted data (output data or data from analog watchdog filter - according to AWFSEL bit setting in DFSDM_FLTxCR1 register) crosses over/under high/low thresholds in DFSDM_FLTxAWHTR / DFSDM_FLTxAWLTR registers
  - enabled by AWDIE bit in DFSDM_FLTxCR2 register (on selected channels AWDCH[7:0])
  - indicated in AWDF bit in DFSDM_FLTxISR register
  - separate indication of high or low analog watchdog threshold error by AWHTF[7:0] and AWLTF[7:0] fields in DFSDM_FLTxAWSR register
  - cleared by writing ‘1’ into corresponding CLRAWHTF[7:0] or CLRAWLTF[7:0] bits in DFSDM_FLTxAWCFR register
- Short-circuit detector interrupt:
  - occurred when the number of stable data crosses over thresholds in DFSDM_CHyAWSCDR register
  - enabled by SCDIE bit in DFSDM_FLTxCR2 register (on channel selected by SCDEN bi tin DFSDM_CHyCFGR1 register)
  - indicated in SCDF[7:0] bits in DFSDM_FLTxISR register (which also reports the channel on which the short-circuit detector event occurred)
  - cleared by writing ‘1’ into the corresponding CLRSCDF[7:0] bit in DFSDM_FLTxICR register
- Channel clock absence interrupt:
  - occurred when there is clock absence on CKINy pin (see *Clock absence detection* in *Section 24.4.4: Serial channel transceivers*)
  - enabled by CKABIE bit in DFSDM_FLTxCR2 register (on channels selected by CKABEN bit in DFSDM_CHyCFGR1 register)
  - indicated in CKABF[y] bit in DFSDM_FLTxISR register
  - cleared by writing ‘1’ into CLRCKABF[y] bit in DFSDM_FLTxICR register

Table 161. DFSDM interrupt requests

Interrupt event	Event flag	Event/Interrupt clearing method	Interrupt enable control bit
End of injected conversion	JEOCF	reading DFSDM_FLTxJDATAR	JEOCIE
End of regular conversion	REOCF	reading DFSDM_FLTxRDATAR	REOCIE
Injected data overrun	JOVRF	writing CLRJOVRF = 1	JOVRIE
Regular data overrun	ROVRF	writing CLRROVRF = 1	ROVRIE

Table 161. DFSDM interrupt requests (continued)

Interrupt event	Event flag	Event/Interrupt clearing method	Interrupt enable control bit
Analog watchdog	AWDF, AWHTF[7:0], AWLTF[7:0]	writing CLRAWHTF[7:0] = 1 writing CLRAWLTF[7:0] = 1	AWDIE, (AWDCH[7:0])
short-circuit detector	SCDF[7:0]	writing CLRSCDF[7:0] = 1	SCDIE, (SCDEN)
Channel clock absence	CKABF[7:0]	writing CLRCKABF[7:0] = 1	CKABIE, (CKABEN)

24.6 DFSDM DMA transfer

To decrease the CPU intervention, conversions can be transferred into memory using a DMA transfer. A DMA transfer for injected conversions is enabled by setting bit JDMAEN=1 in DFSDM_FLTxCR1 register. A DMA transfer for regular conversions is enabled by setting bit RDMAEN=1 in DFSDM_FLTxCR1 register.

Note: With a DMA transfer, the interrupt flag is automatically cleared at the end of the injected or regular conversion (JEOCF or REOCF bit in DFSDM_FLTxISR register) because DMA is reading DFSDM_FLTxJDATAR or DFSDM_FLTxRDATAR register.

24.7 DFSDM channel y registers (y=0..7)

Word access (32-bit) must be used for registers write access except DFSDM_CHyDATINR register. Write access to DFSDM_CHyDATINR register can be either word access (32-bit) or half-word access (16-bit).

24.7.1 DFSDM channel y configuration register (DFSDM_CHyCFGR1)

This register specifies the parameters used by channel y.

Address offset: 0x00 + 0x20 * y, (y = 0 to 7)

Reset value: 0x0000 0000

31	30	29	28	27	26	25	24	23	22	21	20	19	18	17	16
DFSDMEN	CKOUTSRC	Res.	Res.	Res.	Res.	Res.	Res.	CKOUTDIV[7:0]							
rw	rw							rw	rw	rw	rw	rw	rw	rw	rw

15	14	13	12	11	10	9	8	7	6	5	4	3	2	1	0
DATPACK[1:0]		DATMPX[1:0]		Res.	Res.	Res.	CHINSEL	CHEN	CKABEN	SCDEN	Res.	SPICKSEL[1:0]		SITP[1:0]	
rw	rw	rw	rw				rw	rw	rw	rw		rw	rw	rw	rw

Bit 31 **DFSDMEN**: Global enable for DFSDM interface

0: DFSDM interface disabled

1: DFSDM interface enabled

If DFSDM interface is enabled, then it is started to operate according to enabled y channels and enabled x filters settings (CHEN bit in DFSDM_CHyCFGR1 and DFEN bit in DFSDM_FLTxCR1). Data cleared by setting DFSDMEN=0:

–all registers DFSDM_FLTxISR are set to reset state (x = 0..3)

–all registers DFSDM_FLTxAWSR are set to reset state (x = 0..3)

Note: DFSDMEN is present only in DFSDM_CH0CFGR1 register (channel y=0)

Bit 30 **CKOUTSRC**: Output serial clock source selection

0: Source for output clock is from system clock

1: Source for output clock is from audio clock

–SAI1 clock selected by SAI1SEL[1:0] field in RCC configuration (see *Section 6.4.28: Peripherals independent clock configuration register (RCC_CCIPR)*)

This value can be modified only when DFSDMEN=0 (in DFSDM_CH0CFGR1 register).

Note: CKOUTSRC is present only in DFSDM_CH0CFGR1 register (channel y=0)

Bits 29:24 Reserved, must be kept at reset value.

Bits 23:16 **CKOUTDIV[7:0]**: Output serial clock divider

0: Output clock generation is disabled (CKOUT signal is set to low state)

1- 255: Defines the division of system clock for the serial clock output for CKOUT signal in range 2 - 256 (Divider = CKOUTDIV+1).

CKOUTDIV also defines the threshold for a clock absence detection.

This value can only be modified when DFSDMEN=0 (in DFSDM_CH0CFGR1 register).

If DFSDMEN=0 (in DFSDM_CH0CFGR1 register) then CKOUT signal is set to low state (setting is performed one DFSDM clock cycle after DFSDMEN=0).

Note: CKOUTDIV is present only in DFSDM_CH0CFGR1 register (channel y=0)

Bits 15:14 **DATPACK[1:0]**: Data packing mode in DFSDM_CHyDATINR register.

0: Standard: input data in DFSDM_CHyDATINR register are stored only in INDAT0[15:0]. To empty DFSDM_CHyDATINR register one sample must be read by the DFSDM filter from channel y.

1: Interleaved: input data in DFSDM_CHyDATINR register are stored as two samples:

–first sample in INDAT0[15:0] (assigned to channel y)

–second sample INDAT1[15:0] (assigned to channel y)

To empty DFSDM_CHyDATINR register, two samples must be read by the digital filter from channel y (INDAT0[15:0] part is read as first sample and then INDAT1[15:0] part is read as next sample).

2: Dual: input data in DFSDM_CHyDATINR register are stored as two samples:

–first sample INDAT0[15:0] (assigned to channel y)

–second sample INDAT1[15:0] (assigned to channel y+1)

To empty DFSDM_CHyDATINR register first sample must be read by the digital filter from channel y and second sample must be read by another digital filter from channel y+1. Dual mode is available only on even channel numbers (y = 0, 2, 4, 6), for odd channel numbers (y = 1, 3, 5, 7) DFSDM_CHyDATINR is write protected. If an even channel is set to dual mode then the following odd channel must be set into standard mode (DATPACK[1:0]=0) for correct cooperation with even channel.

3: Reserved

This value can be modified only when CHEN=0 (in DFSDM_CHyCFGR1 register).

Bits 13:12 **DATMPX[1:0]**: Input data multiplexer for channel y

0: Data to channel y are taken from external serial inputs as 1-bit values. DFSDM_CHyDATINR register is write protected.

1: Data to channel y are taken from internal analog to digital converter ADC_{y+1} output register update as 16-bit values (if ADC_{y+1} is available). Data from ADCs are written into INDAT0[15:0] part of DFSDM_CHyDATINR register.

2: Data to channel y are taken from internal DFSDM_CHyDATINR register by direct CPU/DMA write. There can be written one or two 16-bit data samples according DATPACK[1:0] bit field setting.

3: Reserved

This value can be modified only when CHEN=0 (in DFSDM_CHyCFGR1 register).

Note: DATMPX[1:0] = 1 is reserved for STM32L47x/L48x devices.

Bits 11:9 Reserved, must be kept at reset value.

Bit 8 **CHINSEL**: Channel inputs selection

0: Channel inputs are taken from pins of the same channel y.

1: Channel inputs are taken from pins of the following channel (channel (y+1) modulo 8).

This value can be modified only when CHEN=0 (in DFSDM_CHyCFGR1 register).

Bit 7 **CHEN**: Channel y enable

0: Channel y disabled

1: Channel y enabled

If channel y is enabled, then serial data receiving is started according to the given channel setting.

Bit 6 **CKABEN**: Clock absence detector enable on channel y

0: Clock absence detector disabled on channel y

1: Clock absence detector enabled on channel y

Bit 5 **SCDEN**: Short-circuit detector enable on channel y

0: Input channel y will not be guarded by the short-circuit detector

1: Input channel y will be continuously guarded by the short-circuit detector

Bit 4 Reserved, must be kept at reset value.

Bits 3:2 **SPICKSEL[1:0]**: SPI clock select for channel y

0: clock coming from external CKINy input - sampling point according SITP[1:0]

1: clock coming from internal CKOUT output - sampling point according SITP[1:0]

2: clock coming from internal CKOUT - sampling point on each second CKOUT falling edge. For connection to external ΣΔ modulator which divides its clock input (from CKOUT) by 2 to generate its output serial communication clock (and this output clock change is active on each clock input rising edge).

3: clock coming from internal CKOUT output - sampling point on each second CKOUT rising edge. For connection to external ΣΔ modulator which divides its clock input (from CKOUT) by 2 to generate its output serial communication clock (and this output clock change is active on each clock input falling edge).

This value can be modified only when CHEN=0 (in DFSDM_CHyCFGR1 register).

Bits 1:0 **SITP[1:0]**: Serial interface type for channel y

00: SPI with rising edge to strobe data

01: SPI with falling edge to strobe data

10: Manchester coded input on DATINy pin: rising edge = logic 0, falling edge = logic 1

11: Manchester coded input on DATINy pin: rising edge = logic 1, falling edge = logic 0

This value can only be modified when CHEN=0 (in DFSDM_CHyCFGR1 register).

24.7.2 DFSDM channel y configuration register (DFSDM_CHyCFGR2)

This register specifies the parameters used by channel y.

Address offset: 0x04 + 0x20 * y, (y = 0 to 7)

Reset value: 0x0000 0000

31	30	29	28	27	26	25	24	23	22	21	20	19	18	17	16
OFFSET[23:8]															
rw	rw	rw	rw	rw	rw	rw	rw	rw	rw	rw	rw	rw	rw	rw	rw
15	14	13	12	11	10	9	8	7	6	5	4	3	2	1	0
OFFSET[7:0]								DTRBS[4:0]					Res.	Res.	Res.
rw	rw	rw	rw	rw	rw	rw	rw	rw	rw	rw	rw	rw			

Bits 31:8 **OFFSET[23:0]**: 24-bit calibration offset for channel y

For channel y, OFFSET is applied to the results of each conversion from this channel.
This value is set by software.

Bits 7:3 **DTRBS[4:0]**: Data right bit-shift for channel y

0-31: Defines the shift of the data result coming from the integrator - how many bit shifts to the right will be performed to have final results. Bit-shift is performed before offset correction. The data shift is rounding the result to nearest integer value. The sign of shifted result is maintained (to have valid 24-bit signed format of result data).
This value can be modified only when CHEN=0 (in DFSDM_CHyCFGR1 register).

Bits 2:0 Reserved, must be kept at reset value.

24.7.3 DFSDM channel y analog watchdog and short-circuit detector register (DFSDM_CHyAWSCDR)

Short-circuit detector and analog watchdog settings for channel y.

Address offset: 0x08 + 0x20 * y, (y = 0 to 7)

Reset value: 0x0000 0000

31	30	29	28	27	26	25	24	23	22	21	20	19	18	17	16
Res.	Res.	Res.	Res.	Res.	Res.	Res.	Res.	AWFORD[1:0]		Res.	AWFOSR[4:0]				
								rw	rw		rw	rw	rw	rw	rw
15	14	13	12	11	10	9	8	7	6	5	4	3	2	1	0
BKSCD[3:0]				Res.	Res.	Res.	Res.	SCDT[7:0]							
rw	rw	rw	rw					rw	rw	rw	rw	rw	rw	rw	rw

Bits 31:24 Reserved, must be kept at reset value.

Bits 23:22 **AWFORD[1:0]**: Analog watchdog Sinc filter order on channel y

0: FastSinc filter type
1: $Sinc^1$ filter type
2: $Sinc^2$ filter type
3: $Sinc^3$ filter type

$Sinc^x$ filter type transfer function:

$$H(z) = \left(\frac{1 - z^{-FOSR}}{1 - z^{-1}}\right)^x$$

FastSinc filter type transfer function:

$$H(z) = \left(\frac{1 - z^{-FOSR}}{1 - z^{-1}}\right)^2 \cdot (1 + z^{-(2 \cdot FOSR)})$$

This bit can be modified only when CHEN=0 (in DFSDM_CHyCFGR1 register).

Bit 21 Reserved, must be kept at reset value.

Bits 20:16 **AWFOSR[4:0]**: Analog watchdog filter oversampling ratio (decimation rate) on channel y

0 - 31: Defines the length of the Sinc type filter in the range 1 - 32 (AWFOSR + 1). This number is also the decimation ratio of the analog data rate.
This bit can be modified only when CHEN=0 (in DFSDM_CHyCFGR1 register).

Note: If AWFOSR = 0 then the filter has no effect (filter bypass).

Bits 15:12 **BKSCD[3:0]**: Break signal assignment for short-circuit detector on channel y

BKSCD[i] = 0: Break i signal not assigned to short-circuit detector on channel y
BKSCD[i] = 1: Break i signal assigned to short-circuit detector on channel y

Bits 11:8 Reserved, must be kept at reset value.

Bits 7:0 **SCDT[7:0]**: short-circuit detector threshold for channel y

These bits are written by software to define the threshold counter for the short-circuit detector. If this value is reached, then a short-circuit detector event occurs on a given channel.

24.7.4 DFSDM channel y watchdog filter data register (DFSDM_CHyWDATR)

This register contains the data resulting from the analog watchdog filter associated to the input channel y.

Address offset: 0x0C + 0x20 * y, (y = 0 to 7)

Reset value: 0x0000 0000

31	30	29	28	27	26	25	24	23	22	21	20	19	18	17	16
Res.	Res.	Res.	Res.	Res.	Res.	Res.	Res.	Res.	Res.	Res.	Res.	Res.	Res.	Res.	Res.

15	14	13	12	11	10	9	8	7	6	5	4	3	2	1	0
WDATA[15:0]															
r	r	r	r	r	r	r	r	r	r	r	r	r	r	r	r

Bits 31:16 Reserved, must be kept at reset value.

Bits 15:0 **WDATA[15:0]**: Input channel y watchdog data

Data converted by the analog watchdog filter for input channel y. This data is continuously converted (no trigger) for this channel, with a limited resolution (OSR=1..32/sinc order = 1..3).

24.7.5 DFSDM channel y data input register (DFSDM_CHyDATINR)

This register contains 16-bit input data to be processed by DFSDM filter module. Write access can be either word access (32-bit) or half-word access (16-bit).

Address offset: 0x10 + 0x20 * y, (y = 0 to 7)

Reset value: 0x0000 0000

31	30	29	28	27	26	25	24	23	22	21	20	19	18	17	16
INDAT1[15:0]															
rw	rw	rw	rw	rw	rw	rw	rw	rw	rw	rw	rw	rw	rw	rw	rw
15	14	13	12	11	10	9	8	7	6	5	4	3	2	1	0
INDAT0[15:0]															
rw	rw	rw	rw	rw	rw	rw	rw	rw	rw	rw	rw	rw	rw	rw	rw

Bits 31:16 **INDAT1[15:0]**: Input data for channel y or channel y+1

Input parallel channel data to be processed by the digital filter if DATMPX[1:0]=1 or DATMPX[1:0]=2. Data can be written by CPU/DMA (if DATMPX[1:0]=2) or directly by internal ADC(1) (if DATMPX[1:0]=1).

If DATPACK[1:0]=0 (standard mode)

INDAT0[15:0] is write protected (not used for input sample).

If DATPACK[1:0]=1 (interleaved mode)

Second channel y data sample is stored into INDAT1[15:0]. First channel y data sample is stored into INDAT0[15:0]. Both samples are read sequentially by DFSDM_FLTx filter as two channel y data samples.

If DATPACK[1:0]=2 (dual mode).

For even y channels: sample in INDAT1[15:0] is automatically copied into INDAT0[15:0] of channel (y+1).

For odd y channels: INDAT1[15:0] is write protected.

See *Section 24.4.6: Parallel data inputs* for more details.

INDAT0[15:1] is in the16-bit signed format.

Bits 15:0 **INDAT0[15:0]**: Input data for channel y

Input parallel channel data to be processed by the digital filter if DATMPX[1:0]=1 or DATMPX[1:0]=2. Data can be written by CPU/DMA (if DATMPX[1:0]=2) or directly by internal ADC(1) (if DATMPX[1:0]=1).

If DATPACK[1:0]=0 (standard mode)

Channel y data sample is stored into INDAT0[15:0].

If DATPACK[1:0]=1 (interleaved mode)

First channel y data sample is stored into INDAT0[15:0]. Second channel y data sample is stored into INDAT1[15:0]. Both samples are read sequentially by DFSDM_FLTx filter as two channel y data samples.

If DATPACK[1:0]=2 (dual mode).

For even y channels: Channel y data sample is stored into INDAT0[15:0].

For odd y channels: INDAT0[15:0] is write protected.

See *Section 24.4.6: Parallel data inputs* for more details.

INDAT0[15:0] is in the16-bit signed format.

1. Availability of the input from internal ADC is device dependent, see *Table 154: DFSDM1 implementation*.

24.8 DFSDM filter x module registers (x=0..3)

Word access (32-bit) must be used for registers write access except DFSDM_CHyDATINR register.

24.8.1 DFSDM filter x control register 1 (DFSDM_FLTxCR1)

Address offset: 0x100 + 0x80 * x, (x = 0 to 3)

Reset value: 0x0000 0000

31	30	29	28	27	26	25	24	23	22	21	20	19	18	17	16
Res.	AWF SEL	FAST	Res.	Res.	RCH[2:0]			Res.	Res.	RDMA EN	Res.	RSYNC	RCON T	RSW START	Res.
	rw	rw			rw	rw	rw			rw		rw	rw	rt_w1	

15	14	13	12	11	10	9	8	7	6	5	4	3	2	1	0
Res.	JEXTEN[1:0]		Res.	Res.	JEXTSEL[2:0]			Res.	Res.	JDMA EN	JSCAN	JSYNC	Res.	JSW START	DFEN
	rw	rw			rw	rw	rw			rw	rw	rw		rt_w1	rw

Bit 31 Reserved, must be kept at reset value.

Bit 30 **AWFSEL**: Analog watchdog fast mode select

0: Analog watchdog on data output value (after the digital filter). The comparison is done after offset correction and shift

1: Analog watchdog on channel transceivers value (after watchdog filter)

Bit 29 **FAST**: Fast conversion mode selection for regular conversions

0: Fast conversion mode disabled

1: Fast conversion mode enabled

When converting a regular conversion in continuous mode, having enabled the fast mode causes each conversion (except the first) to execute faster than in standard mode. This bit has no effect on conversions which are not continuous.

This bit can be modified only when DFEN=0 (DFSDM_FLTxCR1).

if FAST=0 (or first conversion in continuous mode if FAST=1):

$t = [F_{OSR} * (I_{OSR}-1 + F_{ORD}) + F_{ORD}] / f_{CKIN}$..... for $Sinc^X$ filters

$t = [F_{OSR} * (I_{OSR}-1 + 4) + 2] / f_{CKIN}$..... for FastSinc filter

if FAST=1 in continuous mode (except first conversion):

$t = [F_{OSR} * I_{OSR}] / f_{CKIN}$

in case if $F_{OSR} = F_{OSR}[9:0]+1 = 1$ (filter bypassed, active only integrator):

$t = I_{OSR} / f_{CKIN}$ (... but CNVCNT=0)

where: f_{CKIN} is the channel input clock frequency (on given channel CKINy pin) or input data rate in case of parallel data input.

Bits 28:27 Reserved, must be kept at reset value.

Bits 26:24 **RCH[2:0]**: Regular channel selection

0: Channel 0 is selected as the regular channel

1: Channel 1 is selected as the regular channel

...

7: Channel 7 is selected as the regular channel

Writing these bits when RCIP=1 takes effect when the next regular conversion begins. This is especially useful in continuous mode (when RCONT=1). It also affects regular conversions which are pending (due to ongoing injected conversion).

Bits 23:22 Reserved, must be kept at reset value.

Bit 21 **RDMAEN**: DMA channel enabled to read data for the regular conversion

0: The DMA channel is not enabled to read regular data

1: The DMA channel is enabled to read regular data

This bit can be modified only when DFEN=0 (DFSDM_FLTxCR1).

Bit 20 Reserved, must be kept at reset value.

Bit 19 **RSYNC**: Launch regular conversion synchronously with DFSDM_FLT0

0: Do not launch a regular conversion synchronously with DFSDM_FLT0

1: Launch a regular conversion in this DFSDM_FLTx at the very moment when a regular conversion is launched in DFSDM_FLT0

This bit can be modified only when DFEN=0 (DFSDM_FLTxCR1).

Bit 18 **RCONT**: Continuous mode selection for regular conversions

0: The regular channel is converted just once for each conversion request

1: The regular channel is converted repeatedly after each conversion request

Writing ‘0’ to this bit while a continuous regular conversion is already in progress stops the continuous mode immediately.

Bit 17 **RSWSTART**: Software start of a conversion on the regular channel

0: Writing ‘0’ has no effect

1: Writing ‘1’ makes a request to start a conversion on the regular channel and causes RCIP to become ‘1’. If RCIP=1 already, writing to RSWSTART has no effect. Writing ‘1’ has no effect if RSYNC=1.

This bit is always read as ‘0’.

Bits 16:15 Reserved, must be kept at reset value.

Bits 14:13 **JEXTEN[1:0]**: Trigger enable and trigger edge selection for injected conversions

00: Trigger detection is disabled

01: Each rising edge on the selected trigger makes a request to launch an injected conversion

10: Each falling edge on the selected trigger makes a request to launch an injected conversion

11: Both rising edges and falling edges on the selected trigger make requests to launch injected conversions

This bit can be modified only when DFEN=0 (DFSDM_FLTxCR1).

Bits 12:11 Reserved, must be kept at reset value.

Bits 10:8 **JEXTSEL[2:0]**: Trigger signal selection for launching injected conversions

0x0-0x7: Trigger inputs selected by the following table.

This bit can be modified only when DFEN=0 (DFSDM_FLTxCR1).

	DFSDM_FLT0	DFSDM_FLT1	DFSDM_FLT2	DFSDM_FLT3
0x00	dfsdm_jtrg0	dfsdm_jtrg0	dfsdm_jtrg0	dfsdm_jtrg0
0x01	dfsdm_jtrg1	dfsdm_jtrg1	dfsdm_jtrg1	dfsdm_jtrg1
0x02	dfsdm_jtrg2	dfsdm_jtrg2	dfsdm_jtrg2	dfsdm_jtrg2
0x03	dfsdm_jtrg3	dfsdm_jtrg3	dfsdm_jtrg3	dfsdm_jtrg4
0x04	dfsdm_jtrg5	dfsdm_jtrg5	dfsdm_jtrg5	dfsdm_jtrg6
0x05	dfsdm_jtrg7	dfsdm_jtrg7	dfsdm_jtrg8	dfsdm_jtrg8
0x06	dfsdm_jtrg9	dfsdm_jtrg9	dfsdm_jtrg9	dfsdm_jtrg9
0x07	dfsdm_jtrg10	dfsdm_jtrg10	dfsdm_jtrg10	dfsdm_jtrg10

Refer to *Table 157: DFSDM triggers connection*.

Bits 7:6 Reserved, must be kept at reset value.

Bit 5 **JDMAEN**: DMA channel enabled to read data for the injected channel group

0: The DMA channel is not enabled to read injected data

1: The DMA channel is enabled to read injected data

This bit can be modified only when DFEN=0 (DFSDM_FLTxCR1).

Bit 4 **JSCAN**: Scanning conversion mode for injected conversions

0: One channel conversion is performed from the injected channel group and next the selected channel from this group is selected.

1: The series of conversions for the injected group channels is executed, starting over with the lowest selected channel.

This bit can be modified only when DFEN=0 (DFSDM_FLTxCR1).

Writing JCHG if JSCAN=0 resets the channel selection to the lowest selected channel.

Bit 3 **JSYNC**: Launch an injected conversion synchronously with the DFSDM_FLT0 JSWSTART trigger

0: Do not launch an injected conversion synchronously with DFSDM_FLT0

1: Launch an injected conversion in this DFSDM_FLTx at the very moment when an injected conversion is launched in DFSDM_FLT0 by its JSWSTART trigger

This bit can be modified only when DFEN=0 (DFSDM_FLTxCR1).

Bit 2 Reserved, must be kept at reset value.

Bit 1 **JSWSTART**: Start a conversion of the injected group of channels

0: Writing ‘0’ has no effect.

1: Writing ‘1’ makes a request to convert the channels in the injected conversion group, causing JCIP to become ‘1’ at the same time. If JCIP=1 already, then writing to JSWSTART has no effect. Writing ‘1’ has no effect if JSYNC=1.

This bit is always read as ‘0’.

Bit 0 **DFEN**: DFSDM_FLTx enable

0: DFSDM_FLTx is disabled. All conversions of given DFSDM_FLTx are stopped immediately and all DFSDM_FLTx functions are stopped.

1: DFSDM_FLTx is enabled. If DFSDM_FLTx is enabled, then DFSDM_FLTx starts operating according to its setting.

Data which are cleared by setting DFEN=0:

–register DFSDM_FLTxISR is set to the reset state

–register DFSDM_FLTxAWSR is set to the reset state

24.8.2 DFSDM filter x control register 2 (DFSDM_FLTxCR2)

Address offset: 0x104 + 0x80 * x, (x = 0 to 3)

Reset value: 0x0000 0000

31	30	29	28	27	26	25	24	23	22	21	20	19	18	17	16
Res.	Res.	Res.	Res.	Res.	Res.	Res.	Res.	AWDCH[7:0]							
								rw	rw	rw	rw	rw	rw	rw	rw

15	14	13	12	11	10	9	8	7	6	5	4	3	2	1	0
EXCH[7:0]								Res.	CKABIE	SCDIE	AWDIE	ROVRIE	JOVRIE	REOCIE	JEOCIE
rw	rw	rw	rw	rw	rw	rw	rw		rw	rw	rw	rw	rw	rw	rw

Bits 31:24 Reserved, must be kept at reset value.

Bits 23:16 **AWDCH[7:0]**: Analog watchdog channel selection
These bits select the input channel to be guarded continuously by the analog watchdog.
AWDCH[y] = 0: Analog watchdog is disabled on channel y
AWDCH[y] = 1: Analog watchdog is enabled on channel y

Bits 15:8 **EXCH[7:0]**: Extremes detector channel selection
These bits select the input channels to be taken by the Extremes detector.
EXCH[y] = 0: Extremes detector does not accept data from channel y
EXCH[y] = 1: Extremes detector accepts data from channel y

Bit 7 Reserved, must be kept at reset value.

Bit 6 **CKABIE**: Clock absence interrupt enable
0: Detection of channel input clock absence interrupt is disabled
1: Detection of channel input clock absence interrupt is enabled
Please see the explanation of CKABF[7:0] in DFSDM_FLTxISR.
Note: CKABIE is present only in DFSDM_FLT0CR2 register (filter x=0)

Bit 5 **SCDIE**: Short-circuit detector interrupt enable
0: short-circuit detector interrupt is disabled
1: short-circuit detector interrupt is enabled
Please see the explanation of SCDF[7:0] in DFSDM_FLTxISR.
Note: SCDIE is present only in DFSDM_FLT0CR2 register (filter x=0)

Bit 4 **AWDIE**: Analog watchdog interrupt enable
0: Analog watchdog interrupt is disabled
1: Analog watchdog interrupt is enabled
Please see the explanation of AWDF in DFSDM_FLTxISR.

Bit 3 **ROVRIE**: Regular data overrun interrupt enable
0: Regular data overrun interrupt is disabled
1: Regular data overrun interrupt is enabled
Please see the explanation of ROVRF in DFSDM_FLTxISR.

Bit 2 **JOVRIE**: Injected data overrun interrupt enable
0: Injected data overrun interrupt is disabled
1: Injected data overrun interrupt is enabled
Please see the explanation of JOVRF in DFSDM_FLTxISR.

Bit 1 **REOCIE**: Regular end of conversion interrupt enable
0: Regular end of conversion interrupt is disabled
1: Regular end of conversion interrupt is enabled
Please see the explanation of REOCF in DFSDM_FLTxISR.

Bit 0 **JEOCIE**: Injected end of conversion interrupt enable
0: Injected end of conversion interrupt is disabled
1: Injected end of conversion interrupt is enabled
Please see the explanation of JEOCF in DFSDM_FLTxISR.

24.8.3 DFSDM filter x interrupt and status register (DFSDM_FLTxISR)

Address offset: 0x108 + 0x80 * x, (x = 0 to 3)

Reset value: 0x00FF 0000

31	30	29	28	27	26	25	24	23	22	21	20	19	18	17	16
SCDF[7:0]								CKABF[7:0]							
r	r	r	r	r	r	r	r	r	r	r	r	r	r	r	r
15	14	13	12	11	10	9	8	7	6	5	4	3	2	1	0
Res.	RCIP	JCIP	Res.	Res.	Res.	Res.	Res.	Res.	Res.	Res.	AWDF	ROVRF	JOVRF	REOCF	JEOCF
	r	r									r	r	r	r	r

Bits 31:24 **SCDF[7:0]**: short-circuit detector flag

SDCF[y]=0: No short-circuit detector event occurred on channel y

SDCF[y]=1: The short-circuit detector counter reaches, on channel y, the value programmed in the DFSDM_CHyAWSCDR registers

This bit is set by hardware. It can be cleared by software using the corresponding CLRSCDF[y] bit in the DFSDM_FLTxICR register. SCDF[y] is cleared also by hardware when CHEN[y] = 0 (given channel is disabled).

Note: SCDF[7:0] is present only in DFSDM_FLT0ISR register (filter x=0)

Bits 23:16 **CKABF[7:0]**: Clock absence flag

CKABF[y]=0: Clock signal on channel y is present.

CKABF[y]=1: Clock signal on channel y is not present.

Given y bit is set by hardware when clock absence is detected on channel y. It is held at CKABF[y]=1 state by hardware when CHEN=0 (see DFSDM_CHyCFGR1 register). It is held at CKABF[y]=1 state by hardware when the transceiver is not yet synchronized.It can be cleared by software using the corresponding CLRCKABF[y] bit in the DFSDM_FLTxICR register.

Note: CKABF[7:0] is present only in DFSDM_FLT0ISR register (filter x=0)

Bit 15 Reserved, must be kept at reset value.

Bit 14 **RCIP**: Regular conversion in progress status

0: No request to convert the regular channel has been issued

1: The conversion of the regular channel is in progress or a request for a regular conversion is pending

A request to start a regular conversion is ignored when RCIP=1.

Bit 13 **JCIP**: Injected conversion in progress status

0: No request to convert the injected channel group (neither by software nor by trigger) has been issued

1: The conversion of the injected channel group is in progress or a request for a injected conversion is pending, due either to ‘1’ being written to JSWSTART or to a trigger detection

A request to start an injected conversion is ignored when JCIP=1.

Bits 12:5 Reserved, must be kept at reset value.

Bit 4 **AWDF**: Analog watchdog

0: No Analog watchdog event occurred

1: The analog watchdog block detected voltage which crosses the value programmed in the DFSDM_FLTxAWLTR or DFSDM_FLTxAWHTR registers.

This bit is set by hardware. It is cleared by software by clearing all source flag bits AWHTF[7:0] and AWLTF[7:0] in DFSDM_FLTxAWSR register (by writing ‘1’ into the clear bits in DFSDM_FLTxAWCFR register).

Bit 3 **ROVRF**: Regular conversion overrun flag

0: No regular conversion overrun has occurred

1: A regular conversion overrun has occurred, which means that a regular conversion finished while REOCF was already ‘1’. RDATAR is not affected by overruns

This bit is set by hardware. It can be cleared by software using the CLRROVRF bit in the DFSDM_FLTxICR register.

Bit 2 **JOVRF**: Injected conversion overrun flag

0: No injected conversion overrun has occurred

1: An injected conversion overrun has occurred, which means that an injected conversion finished while JEOCF was already ‘1’. JDATAR is not affected by overruns

This bit is set by hardware. It can be cleared by software using the CLRJOVRF bit in the DFSDM_FLTxICR register.

Bit 1 **REOCF**: End of regular conversion flag

0: No regular conversion has completed

1: A regular conversion has completed and its data may be read

This bit is set by hardware. It is cleared when the software or DMA reads DFSDM_FLTxRDATAR.

Bit 0 **JEOCF**: End of injected conversion flag

0: No injected conversion has completed

1: An injected conversion has completed and its data may be read

This bit is set by hardware. It is cleared when the software or DMA reads DFSDM_FLTxJDATAR.

Note: For each of the flag bits, an interrupt can be enabled by setting the corresponding bit in DFSDM_FLTxCR2. If an interrupt is called, the flag must be cleared before exiting the interrupt service routine.

All the bits of DFSDM_FLTxISR are automatically reset when DFEN=0.

24.8.4 DFSDM filter x interrupt flag clear register (DFSDM_FLTxICR)

Address offset: 0x10C + 0x80 * x, (x = 0 to 3)

Reset value: 0x0000 0000

31	30	29	28	27	26	25	24	23	22	21	20	19	18	17	16
CLRSCDF[7:0]								CLRCKABF[7:0]							
rc_w1	rc_w1	rc_w1	rc_w1	rc_w1	rc_w1	rc_w1	rc_w1	rc_w1	rc_w1	rc_w1	rc_w1	rc_w1	rc_w1	rc_w1	rc_w1
15	14	13	12	11	10	9	8	7	6	5	4	3	2	1	0
Res.	Res.	Res.	Res.	Res.	Res.	Res.	Res.	Res.	Res.	Res.	Res.	CLRR OVRF	CLRJ OVRF	Res.	Res.
												rc_w1	rc_w1		

Bits 31:24 **CLRSCDF[7:0]**: Clear the short-circuit detector flag

CLRSCDF[y]=0: Writing ‘0’ has no effect

CLRSCDF[y]=1: Writing ‘1’ to position y clears the corresponding SCDF[y] bit in the DFSDM_FLTxISR register

Note: CLRSCDF[7:0] is present only in DFSDM_FLT0ICR register (filter x=0)

Bits 23:16 **CLRCKABF[7:0]**: Clear the clock absence flag

CLRCKABF[y]=0: Writing ‘0’ has no effect

CLRCKABF[y]=1: Writing ‘1’ to position y clears the corresponding CKABF[y] bit in the DFSDM_FLTxISR register. When the transceiver is not yet synchronized, the clock absence flag is set and cannot be cleared by CLRCKABF[y].

Note: CLRCKABF[7:0] is present only in DFSDM_FLT0ICR register (filter x=0)

Bits 15:4 Reserved, must be kept at reset value.

Bit 3 **CLRROVRF**: Clear the regular conversion overrun flag

0: Writing ‘0’ has no effect

1: Writing ‘1’ clears the ROVRF bit in the DFSDM_FLTxISR register

Bit 2 **CLRJOVRF**: Clear the injected conversion overrun flag

0: Writing ‘0’ has no effect

1: Writing ‘1’ clears the JOVRF bit in the DFSDM_FLTxISR register

Bits 1:0 Reserved, must be kept at reset value.

Note: The bits of DFSDM_FLTxICR are always read as ‘0’.

24.8.5 DFSDM filter x injected channel group selection register (DFSDM_FLTxJCHGR)

Address offset: 0x110 + 0x80 * x, (x = 0 to 3)

Reset value: 0x0000 0001

31	30	29	28	27	26	25	24	23	22	21	20	19	18	17	16
Res.	Res.	Res.	Res.	Res.	Res.	Res.	Res.	Res.	Res.	Res.	Res.	Res.	Res.	Res.	Res.

15	14	13	12	11	10	9	8	7	6	5	4	3	2	1	0
Res.	Res.	Res.	Res.	Res.	Res.	Res.	Res.	JCHG[7:0]							
								rw	rw	rw	rw	rw	rw	rw	rw

Bits 31:8 Reserved, must be kept at reset value.

Bits 7:0 **JCHG[7:0]**: Injected channel group selection

JCHG[y]=0: channel y is not part of the injected group

JCHG[y]=1: channel y is part of the injected group

If JSCAN=1, each of the selected channels is converted, one after another. The lowest channel (channel 0, if selected) is converted first and the sequence ends at the highest selected channel.

If JSCAN=0, then only one channel is converted from the selected channels, and the channel selection is moved to the next channel. Writing JCHG, if JSCAN=0, resets the channel selection to the lowest selected channel.

At least one channel must always be selected for the injected group. Writes causing all JCHG bits to be zero are ignored.

24.8.6 DFSDM filter x control register (DFSDM_FLTxFCR)

Address offset: 0x114 + 0x80 * x, (x = 0 to 3)

Reset value: 0x0000 0000

31	30	29	28	27	26	25	24	23	22	21	20	19	18	17	16
FORD[2:0]			Res.	Res.	Res.	FOSR[9:0]									
rw	rw	rw				rw	rw	rw	rw	rw	rw	rw	rw	rw	rw
15	14	13	12	11	10	9	8	7	6	5	4	3	2	1	0
Res.	Res.	Res.	Res.	Res.	Res.	Res.	Res.	IOSR[7:0]							
								rw	rw	rw	rw	rw	rw	rw	rw

Bits 31:29 **FORD[2:0]**: Sinc filter order

0: FastSinc filter type
1: $Sinc^1$ filter type
2: $Sinc^2$ filter type
3: $Sinc^3$ filter type
4: $Sinc^4$ filter type
5: $Sinc^5$ filter type
6-7: Reserved

$Sinc^x$ filter type transfer function:

$$H(z) = \left(\frac{1 - z^{-FOSR}}{1 - z^{-1}}\right)^x$$

FastSinc filter type transfer function:

$$H(z) = \left(\frac{1 - z^{-FOSR}}{1 - z^{-1}}\right)^2 \cdot (1 + z^{-(2 \cdot FOSR)})$$

This bit can only be modified when DFEN=0 (DFSDM_FLTxCR1).

Bits 28:26 Reserved, must be kept at reset value.

Bits 25:16 **FOSR[9:0]**: Sinc filter oversampling ratio (decimation rate)

0 - 1023: Defines the length of the Sinc type filter in the range 1 - 1024 (F_{OSR} = FOSR[9:0] +1). This number is also the decimation ratio of the output data rate from filter.
This bit can only be modified when DFEN=0 (DFSDM_FLTxCR1)

Note: If FOSR = 0, then the filter has no effect (filter bypass).

Bits 15:8 Reserved, must be kept at reset value.

Bits 7:0 **IOSR[7:0]**: Integrator oversampling ratio (averaging length)

0- 255: The length of the Integrator in the range 1 - 256 (IOSR + 1). Defines how many samples from Sinc filter will be summed into one output data sample from the integrator. The output data rate from the integrator will be decreased by this number (additional data decimation ratio).
This bit can only be modified when DFEN=0 (DFSDM_FLTxCR1)

Note: If IOSR = 0, then the Integrator has no effect (Integrator bypass).

24.8.7 DFSDM filter x data register for injected group (DFSDM_FLTxJDATAR)

Address offset: 0x118 + 0x80 * x, (x = 0 to 3)

Reset value: 0x0000 0000

31	30	29	28	27	26	25	24	23	22	21	20	19	18	17	16
JDATA[23:8]															
r	r	r	r	r	r	r	r	r	r	r	r	r	r	r	r
15	14	13	12	11	10	9	8	7	6	5	4	3	2	1	0
JDATA[7:0]								Res.	Res.	Res.	Res.	Res.	JDATACH[2:0]		
r	r	r	r	r	r	r	r						r	r	r

Bits 31:8 **JDATA[23:0]**: Injected group conversion data

When each conversion of a channel in the injected group finishes, its resulting data is stored in this field. The data is valid when JEOCF=1. Reading this register clears the corresponding JEOCF.

Bits 7:3 Reserved, must be kept at reset value.

Bits 2:0 **JDATACH[2:0]**: Injected channel most recently converted

When each conversion of a channel in the injected group finishes, JDATACH[2:0] is updated to indicate which channel was converted. Thus, JDATA[23:0] holds the data that corresponds to the channel indicated by JDATACH[2:0].

Note: DMA may be used to read the data from this register. Half-word accesses may be used to read only the MSBs of conversion data.

Reading this register also clears JEOCF in DFSDM_FLTxISR. Thus, the firmware must not read this register if DMA is activated to read data from this register.

24.8.8 DFSDM filter x data register for the regular channel (DFSDM_FLTxRDATAR)

Address offset: 0x11C + 0x80 * x, (x = 0 to 3)

Reset value: 0x0000 0000

31	30	29	28	27	26	25	24	23	22	21	20	19	18	17	16
RDATA[23:8]															
r	r	r	r	r	r	r	r	r	r	r	r	r	r	r	r
15	14	13	12	11	10	9	8	7	6	5	4	3	2	1	0
RDATA[7:0]								Res.	Res.	Res.	RPEND	Res.	RDATACH[2:0][1]		
r	r	r	r	r	r	r	r				r		r	r	r

1. Availability of the input from internal ADC is device dependent, see *Table 154: DFSDM1 implementation*.

Bits 31:8 **RDATA[23:0]**: Regular channel conversion data

When each regular conversion finishes, its data is stored in this register. The data is valid when REOCF=1. Reading this register clears the corresponding REOCF.

Bits 7:5 Reserved, must be kept at reset value.

Bit 4 **RPEND**: Regular channel pending data

Regular data in RDATA[23:0] was delayed due to an injected channel trigger during the conversion

Bit 3 Reserved, must be kept at reset value.

Bits 2:0 **RDATACH[2:0]**(1): Regular channel most recently converted

When each regular conversion finishes, RDATACH[2:0] is updated to indicate which channel was converted (because regular channel selection RCH[2:0] in DFSDM_FLTxCR1 register can be updated during regular conversion). Thus RDATA[23:0] holds the data that corresponds to the channel indicated by RDATACH[2:0].

1. Availability of the input from internal ADC is device dependent, see *Table 154: DFSDM1 implementation*.

Note: Half-word accesses may be used to read only the MSBs of conversion data.

Reading this register also clears REOCF in DFSDM_FLTxISR.

24.8.9 DFSDM filter x analog watchdog high threshold register (DFSDM_FLTxAWHTR)

Address offset: 0x120 + 0x80 * x, (x = 0 to 3)

Reset value: 0x0000 0000

31	30	29	28	27	26	25	24	23	22	21	20	19	18	17	16
AWHT[23:8]															
rw	rw	rw	rw	rw	rw	rw	rw	rw	rw	rw	rw	rw	rw	rw	rw
15	14	13	12	11	10	9	8	7	6	5	4	3	2	1	0
AWHT[7:0]								Res.	Res.	Res.	Res.	BKAWH[3:0]			
rw	rw	rw	rw	rw	rw	rw	rw					rw	rw	rw	rw

Bits 31:8 **AWHT[23:0]**: Analog watchdog high threshold

These bits are written by software to define the high threshold for the analog watchdog.

Note: In case channel transceivers monitor (AWFSEL=1), the higher 16 bits (AWHT[23:8]) define the 16-bit threshold as compared with the analog watchdog filter output (because data coming from the analog watchdog filter are up to a 16-bit resolution). Bits AWHT[7:0] are not taken into comparison in this case.

Bits 7:4 Reserved, must be kept at reset value.

Bits 3:0 **BKAWH[3:0]**: Break signal assignment to analog watchdog high threshold event

BKAWH[i] = 0: Break i signal is not assigned to an analog watchdog high threshold event

BKAWH[i] = 1: Break i signal is assigned to an analog watchdog high threshold event

24.8.10 DFSDM filter x analog watchdog low threshold register (DFSDM_FLTxAWLTR)

Address offset: 0x124 + 0x80 * x, (x = 0 to 3)

Reset value: 0x0000 0000

31	30	29	28	27	26	25	24	23	22	21	20	19	18	17	16
AWLT[23:8]															
rw	rw	rw	rw	rw	rw	rw	rw	rw	rw	rw	rw	rw	rw	rw	rw

15	14	13	12	11	10	9	8	7	6	5	4	3	2	1	0
AWLT[7:0]								Res.	Res.	Res.	Res.	BKAWL[3:0]			
rw	rw	rw	rw	rw	rw	rw	rw					rw	rw	rw	rw

Bits 31:8 **AWLT[23:0]**: Analog watchdog low threshold

These bits are written by software to define the low threshold for the analog watchdog.

Note: In case channel transceivers monitor (AWFSEL=1), only the higher 16 bits (AWLT[23:8]) define the 16-bit threshold as compared with the analog watchdog filter output (because data coming from the analog watchdog filter are up to a 16-bit resolution). Bits AWLT[7:0] are not taken into comparison in this case.

Bits 7:4 Reserved, must be kept at reset value.

Bits 3:0 **BKAWL[3:0]**: Break signal assignment to analog watchdog low threshold event

BKAWL[i] = 0: Break i signal is not assigned to an analog watchdog low threshold event

BKAWL[i] = 1: Break i signal is assigned to an analog watchdog low threshold event

24.8.11 DFSDM filter x analog watchdog status register (DFSDM_FLTxAWSR)

Address offset: 0x128 + 0x80 * x, (x = 0 to 3)

Reset value: 0x0000 0000

31	30	29	28	27	26	25	24	23	22	21	20	19	18	17	16
Res.	Res.	Res.	Res.	Res.	Res.	Res.	Res.	Res.	Res.	Res.	Res.	Res.	Res.	Res.	Res.

15	14	13	12	11	10	9	8	7	6	5	4	3	2	1	0
AWHTF[7:0]								AWLTF[7:0]							
r	r	r	r	r	r	r	r	r	r	r	r	r	r	r	r

Bits 31:16 Reserved, must be kept at reset value.

Bits 15:8 **AWHTF[7:0]**: Analog watchdog high threshold flag

AWHTF[y]=1 indicates a high threshold error on channel y. It is set by hardware. It can be cleared by software using the corresponding CLRAWHTF[y] bit in the DFSDM_FLTxAWCFR register.

Bits 7:0 **AWLTF[7:0]**: Analog watchdog low threshold flag

AWLTF[y]=1 indicates a low threshold error on channel y. It is set by hardware. It can be cleared by software using the corresponding CLRAWLTF[y] bit in the DFSDM_FLTxAWCFR register.

Note: All the bits of DFSDM_FLTxAWSR are automatically reset when DFEN=0.

24.8.12 DFSDM filter x analog watchdog clear flag register (DFSDM_FLTxAWCFR)

Address offset: 0x12C + 0x80 * x, (x = 0 to 3)

Reset value: 0x0000 0000

31	30	29	28	27	26	25	24	23	22	21	20	19	18	17	16
Res.	Res.	Res.	Res.	Res.	Res.	Res.	Res.	Res.	Res.	Res.	Res.	Res.	Res.	Res.	Res.

15	14	13	12	11	10	9	8	7	6	5	4	3	2	1	0
CLRAWHTF[7:0]								CLRAWLTF[7:0]							
rc_w1	rc_w1	rc_w1	rc_w1	rc_w1	rc_w1	rc_w1	rc_w1	rc_w1	rc_w1	rc_w1	rc_w1	rc_w1	rc_w1	rc_w1	rc_w1

Bits 31:16 Reserved, must be kept at reset value.

Bits 15:8 **CLRAWHTF[7:0]**: Clear the analog watchdog high threshold flag

CLRAWHTF[y]=0: Writing ‘0’ has no effect

CLRAWHTF[y]=1: Writing ‘1’ to position y clears the corresponding AWHTF[y] bit in the DFSDM_FLTxAWSR register

Bits 7:0 **CLRAWLTF[7:0]**: Clear the analog watchdog low threshold flag

CLRAWLTF[y]=0: Writing ‘0’ has no effect

CLRAWLTF[y]=1: Writing ‘1’ to position y clears the corresponding AWLTF[y] bit in the DFSDM_FLTxAWSR register

24.8.13 DFSDM filter x extremes detector maximum register (DFSDM_FLTxEXMAX)

Address offset: 0x130 + 0x80 * x, (x = 0 to 3)

Reset value: 0x8000 0000

31	30	29	28	27	26	25	24	23	22	21	20	19	18	17	16
EXMAX[23:8]															
rs_r	rc_r	rc_r	rc_r	rc_r	rc_r	rc_r	rc_r	rc_r	rc_r	rc_r	rc_r	rc_r	rc_r	rc_r	rc_r

15	14	13	12	11	10	9	8	7	6	5	4	3	2	1	0
EXMAX[7:0]								Res.	Res.	Res.	Res.	Res.	EXMAXCH[2:0]		
rc_r	rc_r	rc_r	rc_r	rc_r	rc_r	rc_r	rc_r						r	r	r

Bits 31:8 **EXMAX[23:0]**: Extremes detector maximum value

These bits are set by hardware and indicate the highest value converted by DFSDM_FLTx. EXMAX[23:0] bits are reset to value (0x800000) by reading of this register.

Bits 7:3 Reserved, must be kept at reset value.

Bits 2:0 **EXMAXCH[2:0]**: Extremes detector maximum data channel.

These bits contains information about the channel on which the data is stored into EXMAX[23:0]. Bits are cleared by reading of this register.

24.8.14 DFSDM filter x extremes detector minimum register (DFSDM_FLTxEXMIN)

Address offset: 0x134 + 0x80 * x, (x = 0 to 3)

Reset value: 0x7FFF FF00

31	30	29	28	27	26	25	24	23	22	21	20	19	18	17	16
EXMIN[23:8]															
rc_r	rs_r	rs_r	rs_r	rs_r	rs_r	rs_r	rs_r	rs_r	rs_r	rs_r	rs_r	rs_r	rs_r	rs_r	rs_r
15	14	13	12	11	10	9	8	7	6	5	4	3	2	1	0
EXMIN[7:0]								Res.	Res.	Res.	Res.	Res.	EXMINCH[2:0]		
rs_r	rs_r	rs_r	rs_r	rs_r	rs_r	rs_r	rs_r						r	r	r

Bits 31:8 **EXMIN[23:0]**: Extremes detector minimum value

These bits are set by hardware and indicate the lowest value converted by DFSDM_FLTx. EXMIN[23:0] bits are reset to value (0x7FFFFF) by reading of this register.

Bits 7:3 Reserved, must be kept at reset value.

Bits 2:0 **EXMINCH[2:0]**: Extremes detector minimum data channel

These bits contain information about the channel on which the data is stored into EXMIN[23:0]. Bits are cleared by reading of this register.

24.8.15 DFSDM filter x conversion timer register (DFSDM_FLTxCNVTIMR)

Address offset: 0x138 + 0x80 * x, (x = 0 to 3)

Reset value: 0x0000 0000

31	30	29	28	27	26	25	24	23	22	21	20	19	18	17	16
CNVCNT[27:12]															
r	r	r	r	r	r	r	r	r	r	r	r	r	r	r	r
15	14	13	12	11	10	9	8	7	6	5	4	3	2	1	0
CNVCNT[11:0]												Res.	Res.	Res.	Res.
r	r	r	r	r	r	r	r	r	r	r	r				

Bits 31:4 **CNVCNT[27:0]**: 28-bit timer counting conversion time t = CNVCNT[27:0] / $f_{DFSDMCLK}$

The timer has an input clock from DFSDM clock (system clock $f_{DFSDMCLK}$). Conversion time measurement is started on each conversion start and stopped when conversion finishes (interval between first and last serial sample). Only in case of filter bypass (FOSR[9:0] = 0) is the conversion time measurement stopped and CNVCNT[27:0] = 0. The counted time is:

if FAST=0 (or first conversion in continuous mode if FAST=1):

$t = [F_{OSR} * (I_{OSR}-1 + F_{ORD}) + F_{ORD}] / f_{CKIN}$..... for $Sinc^x$ filters

$t = [F_{OSR} * (I_{OSR}-1 + 4) + 2] / f_{CKIN}$..... for FastSinc filter

if FAST=1 in continuous mode (except first conversion):

$t = [F_{OSR} * I_{OSR}] / f_{CKIN}$

in case if F_{OSR} = FOSR[9:0]+1 = 1 (filter bypassed, active only integrator):

CNVCNT = 0 (counting is stopped, conversion time: $t = I_{OSR} / f_{CKIN}$)

where: f_{CKIN} is the channel input clock frequency (on given channel CKINy pin) or input data rate in case of parallel data input (from internal ADC[1] or from CPU/DMA write)

Note: When conversion is interrupted (e.g. by disable/enable selected channel) the timer counts also this interruption time.

Bits 3:0 Reserved, must be kept at reset value.

1. Availability of the input from internal ADC is device dependent, see *Table 154: DFSDM1 implementation*.

24.8.16 DFSDM register map

The following table summarizes the DFSDM registers.

Table 162. DFSDM register map and reset values

Offset	Register name	31	30	29	28	27	26	25	24	23	22	21	20	19	18	17	16	15	14	13	12	11	10	9	8	7	6	5	4	3	2	1	0
0x00	**DFSDM_ CH0CFGR1**	DFSDMEN	CKOUTSRC	Res.	Res.	Res.	Res.	Res.	Res.	CKOUTDIV[7:0]								DATPACK[1:0]		DATMPX[1:0]		Res.	Res.	Res.	CHINSEL	CHEN	CKABEN	SCDEN	Res.	SPICKSEL [1:0]		SITP[1:0]	
	reset value	0	0							0	0	0	0	0	0	0	0	0	0	0	0				0	0	0	0		0	0	0	0
0x04	**DFSDM_ CH0CFGR2**	OFFSET[23:0]																								DTRBS[4:0]					Res.	Res.	Res.
	reset value	0																								0							
0x08	**DFSDM_ CH0AWSCDR**	Res.	Res.	Res.	Res.	Res.	Res.	Res.	Res.	AWFORD [1:0]		Res.	AWFOSR[4:0]					BKSCD[3:0]				Res.	Res.	Res.	Res.	SCDT[7:0]							
	reset value									0	0		0	0	0	0	0	0	0	0	0					0	0	0	0	0	0	0	0
0x0C	**DFSDM_ CH0WDATR**	Res.	Res.	Res.	Res.	Res.	Res.	Res.	Res.	Res.	Res.	Res.	Res.	Res.	Res.	Res.	Res.	WDATA[15:0]															
	reset value																	0	0	0	0	0	0	0	0	0	0	0	0	0	0	0	0
0x10	**DFSDM_ CH0DATINR**	INDAT1[15:0]																INDAT0[15:0]															
	reset value	0	0	0	0	0	0	0	0	0	0	0	0	0	0	0	0	0	0	0	0	0	0	0	0	0	0	0	0	0	0	0	0
0x14 - 0x1C	Reserved	Res.	Res.	Res.	Res.	Res.	Res.	Res.	Res.	Res.	Res.	Res.	Res.	Res.	Res.	Res.	Res.	Res.	Res.	Res.	Res.	Res.	Res.	Res.	Res.	Res.	Res.	Res.	Res.	Res.	Res.	Res.	Res.
0x20	**DFSDM_ CH1CFGR1**	Res.	Res.	Res.	Res.	Res.	Res.	Res.	Res.	Res.	Res.	Res.	Res.	Res.	Res.	Res.	Res.	DATPACK[1:0]		DATMPX[1:0]		Res.	Res.	Res.	CHINSEL	CHEN	CKABEN	SCDEN	Res.	SPICKSEL [1:0]		SITP[1:0]	
	reset value																	0	0	0	0				0	0	0	0		0	0	0	0

Table 162. DFSDM register map and reset values (continued)

Offset	Register name	31	30	29	28	27	26	25	24	23	22	21	20	19	18	17	16	15	14	13	12	11	10	9	8	7	6	5	4	3	2	1	0
0x24	**DFSDM_ CH1CFGR2**	OFFSET[23:0]																								DTRBS[4:0]					Res.	Res.	Res.
	reset value	0	0	0	0	0	0	0	0	0	0	0	0	0	0	0	0	0	0	0	0	0	0	0	0	0	0	0	0	0			
0x28	**DFSDM_ CH1AWSCDR**	Res.	Res.	Res.	Res.	Res.	Res.	Res.	Res.	AWFORD[1:0]		Res.	AWFOSR[4:0]					BKSCD[3:0]				Res.	Res.	Res.	Res.	SCDT[7:0]							
	reset value									0	0		0	0	0	0	0	0	0	0	0					0	0	0	0	0	0	0	0
0x2C	**DFSDM_ CH1WDATR**	Res.	Res.	Res.	Res.	Res.	Res.	Res.	Res.	Res.	Res.	Res.	Res.	Res.	Res.	Res.	Res.	WDATA[15:0]															
	reset value																0	0	0	0	0	0	0	0	0	0	0	0	0	0	0	0	0
0x30	**DFSDM_ CH1DATINR**	INDAT1[15:0]																INDAT0[15:0]															
	reset value	0	0	0	0	0	0	0	0	0	0	0	0	0	0	0	0	0	0	0	0	0	0	0	0	0	0	0	0	0	0	0	0
0x34 - 0x3C	Reserved	Res.	Res.	Res.	Res.	Res.	Res.	Res.	Res.	Res.	Res.	Res.	Res.	Res.	Res.	Res.	Res.	Res.	Res.	Res.	Res.	Res.	Res.	Res.	Res.	Res.	Res.	Res.	Res.	Res.	Res.	Res.	Res.
0x40	**DFSDM_ CH2CFGR1**	Res.	Res.	Res.	Res.	Res.	Res.	Res.	Res.	Res.	Res.	Res.	Res.	Res.	Res.	Res.	Res.	DATPACK[1:0]		DATMPX[1:0]		Res.	Res.	Res.	CHINSEL	CHEN	CKABEN	SCDEN	Res.	SPICKSEL[1:0]		SITP[1:0]	
	reset value																	0	0	0	0				0	0	0	0		0	0	0	0
0x44	**DFSDM_ CH2CFGR2**	OFFSET[23:0]																								DTRBS[4:0]					Res.	Res.	Res.
	reset value	0	0	0	0	0	0	0	0	0	0	0	0	0	0	0	0	0	0	0	0	0	0	0	0	0	0	0	0	0			
0x48	**DFSDM_ CH2AWSCDR**	Res.	Res.	Res.	Res.	Res.	Res.	Res.	Res.	AWFORD[1:0]		Res.	AWFOSR[4:0]					BKSCD[3:0]				Res.	Res.	Res.	Res.	SCDT[7:0]							
	reset value									0	0		0	0	0	0	0	0	0	0	0					0	0	0	0	0	0	0	0
0x4C	**DFSDM_ CH2WDATR**	Res.	Res.	Res.	Res.	Res.	Res.	Res.	Res.	Res.	Res.	Res.	Res.	Res.	Res.	Res.	Res.	WDATA[15:0]															
	reset value																	0	0	0	0	0	0	0	0	0	0	0	0	0	0	0	0
0x50	**DFSDM_ CH2DATINR**	INDAT1[15:0]																INDAT0[15:0]															
	reset value	0	0	0	0	0	0	0	0	0	0	0	0	0	0	0	0	0	0	0	0	0	0	0	0	0	0	0	0	0	0	0	0
0x54 - 0x5C	Reserved	Res.	Res.	Res.	Res.	Res.	Res.	Res.	Res.	Res.	Res.	Res.	Res.	Res.	Res.	Res.	Res.	Res.	Res.	Res.	Res.	Res.	Res.	Res.	Res.	Res.	Res.	Res.	Res.	Res.	Res.	Res.	Res.
0x60	**DFSDM_ CH3CFGR1**	Res.	Res.	Res.	Res.	Res.	Res.	Res.	Res.	Res.	Res.	Res.	Res.	Res.	Res.	Res.	Res.	DATPACK[1:0]		DATMPX[1:0]		Res.	Res.	Res.	CHINSEL	CHEN	CKABEN	SCDEN	Res.	SPICKSEL[1:0]		SITP[1:0]	
	reset value																	0	0	0	0				0	0	0	0		0	0	0	0
0x64	**DFSDM_ CH3CFGR2**	OFFSET[23:0]																								DTRBS[4:0]					Res.	Res.	Res.
	reset value	0	0	0	0	0	0	0	0	0	0	0	0	0	0	0	0	0	0	0	0	0	0	0	0	0	0	0	0	0			

Table 162. DFSDM register map and reset values (continued)

Offset	Register name	31	30	29	28	27	26	25	24	23	22	21	20	19	18	17	16	15	14	13	12	11	10	9	8	7	6	5	4	3	2	1	0
0x68	DFSDM_ CH3AWSCDR	Res.	Res.	Res.	Res.	Res.	Res.	Res.	Res.	AWFORD[1:0]		Res.	AWFOSR[4:0]					BKSCD[3:0]				Res.	Res.	Res.	Res.	SCDT[7:0]							
	reset value									0	0		0	0	0	0	0	0	0	0	0					0	0	0	0	0	0	0	0
0x6C	DFSDM_ CH3WDATR	Res.	Res.	Res.	Res.	Res.	Res.	Res.	Res.	Res.	Res.	Res.	Res.	Res.	Res.	Res.	Res.	WDATA[15:0]															
	reset value																	0	0	0	0	0	0	0	0	0	0	0	0	0	0	0	0
0x70	DFSDM_ CH3DATINR	INDAT1[15:0]																INDAT0[15:0]															
	reset value	0	0	0	0	0	0	0	0	0	0	0	0	0	0	0	0	0	0	0	0	0	0	0	0	0	0	0	0	0	0	0	0
0x74 - 0x7C	Reserved	Res.	Res.	Res.	Res.	Res.	Res.	Res.	Res.	Res.	Res.	Res.	Res.	Res.	Res.	Res.	Res.	Res.	Res.	Res.	Res.	Res.	Res.	Res.	Res.	Res.	Res.	Res.	Res.	Res.	Res.	Res.	Res.
0x80	DFSDM_ CH4CFGR1	Res.	Res.	Res.	Res.	Res.	Res.	Res.	Res.	Res.	Res.	Res.	Res.	Res.	Res.	Res.	Res.	DATPACK[1:0]		DATMPX[1:0]		Res.	Res.	Res.	CHINSEL	CHEN	CKABEN	SCDEN	Res.	SPICKSEL[1:0]		SITP[1:0]	
	reset value																	0	0	0	0				0	0	0	0		0	0	0	0
0x84	DFSDM_ CH4CFGR2	OFFSET[23:0]																								DTRBS[4:0]					Res.	Res.	Res.
	reset value	0	0	0	0	0	0	0	0	0	0	0	0	0	0	0	0	0	0	0	0	0	0	0	0	0	0	0	0	0			
0x88	DFSDM_ CH4AWSCDR	Res.	Res.	Res.	Res.	Res.	Res.	Res.	Res.	AWFORD[1:0]		Res.	AWFOSR[4:0]					BKSCD[3:0]				Res.	Res.	Res.	Res.	SCDT[7:0]							
	reset value									0	0		0	0	0	0	0	0	0	0	0					0	0	0	0	0	0	0	0
0x8C	DFSDM_ CH4WDATR	Res.	Res.	Res.	Res.	Res.	Res.	Res.	Res.	Res.	Res.	Res.	Res.	Res.	Res.	Res.	Res.	WDATA[15:0]															
	reset value																	0	0	0	0	0	0	0	0	0	0	0	0	0	0	0	0
0x90	DFSDM_ CH4DATINR	INDAT1[15:0]																INDAT0[15:0]															
	reset value	0	0	0	0	0	0	0	0	0	0	0	0	0	0	0	0	0	0	0	0	0	0	0	0	0	0	0	0	0	0	0	0
0x94 - 0x9C	Reserved	Res.	Res.	Res.	Res.	Res.	Res.	Res.	Res.	Res.	Res.	Res.	Res.	Res.	Res.	Res.	Res.	Res.	Res.	Res.	Res.	Res.	Res.	Res.	Res.	Res.	Res.	Res.	Res.	Res.	Res.	Res.	Res.
0xA0	DFSDM_ CH5CFGR1	Res.	Res.	Res.	Res.	Res.	Res.	Res.	Res.	Res.	Res.	Res.	Res.	Res.	Res.	Res.	Res.	DATPACK[1:0]		DATMPX[1:0]		Res.	Res.	Res.	CHINSEL	CHEN	CKABEN	SCDEN	Res.	SPICKSEL[1:0]		SITP[1:0]	
	reset value																	0	0	0	0				0	0	0	0		0	0	0	0
0xA4	DFSDM_ CH5CFGR2	OFFSET[23:0]																								DTRBS[4:0]					Res.	Res.	Res.
	reset value	0	0	0	0	0	0	0	0	0	0	0	0	0	0	0	0	0	0	0	0	0	0	0	0	0	0	0	0	0			
0xA8	DFSDM_ CH5AWSCDR	Res.	Res.	Res.	Res.	Res.	Res.	Res.	Res.	AWFORD[1:0]		Res.	AWFOSR[4:0]					BKSCD[3:0]				Res.	Res.	Res.	Res.	SCDT[7:0]							
	reset value									0	0		0	0	0	0	0	0	0	0	0					0	0	0	0	0	0	0	0

Table 162. DFSDM register map and reset values (continued)

Offset	Register name	31	30	29	28	27	26	25	24	23	22	21	20	19	18	17	16	15	14	13	12	11	10	9	8	7	6	5	4	3	2	1	0
0xAC	**DFSDM_ CH5WDATR**	Res.	Res.	Res.	Res.	Res.	Res.	Res.	Res.		Res.	Res.	Res.	Res.	Res.	Res.	Res.	WDATA[15:0]															
	reset value																	0	0	0	0	0	0	0	0	0	0	0	0	0	0	0	0
0xB0	**DFSDM_ CH5DATINR**	INDAT1[15:0]																INDAT0[15:0]															
	reset value	0	0	0	0	0	0	0	0	0	0	0	0	0	0	0	0	0	0	0	0	0	0	0	0	0	0	0	0	0	0	0	0
0xB4 - 0xBC	Reserved	Res.	Res.	Res.	Res.	Res.	Res.	Res.	Res.	Res.	Res.	Res.	Res.	Res.	Res.	Res.	Res.	Res.	Res.	Res.	Res.	Res.	Res.	Res.	Res.	Res.	Res.	Res.	Res.	Res.	Res.	Res.	Res.
0xC0	**DFSDM_ CH6CFGR1**	Res.	Res.	Res.	Res.	Res.	Res.	Res.	Res.	Res.	Res.	Res.	Res.	Res.	Res.	Res.	Res.	DATPACK[1:0]		DATMPX[1:0]		Res.	Res.	Res.	CHINSEL	CHEN	CKABEN	SCDEN	Res.	SPICKSEL[1:0]		SITP[1:0]	
	reset value																	0	0	0	0				0	0	0	0		0	0	0	0
0xC4	**DFSDM_ CH6CFGR2**	OFFSET[23:0]																								DTRBS[4:0]					Res.	Res.	Res.
	reset value	0	0	0	0	0	0	0	0	0	0	0	0	0	0	0	0	0	0	0	0	0	0	0	0	0	0	0	0	0			
0xC8	**DFSDM_ CH6AWSCDR**	Res.	Res.	Res.	Res.	Res.	Res.	Res.	Res.	AWFORD[1:0]		Res.	AWFOSR[4:0]					BKSCD[3:0]				Res.	Res.	Res.	Res.	SCDT[7:0]							
	reset value									0	0		0	0	0	0	0	0	0	0	0					0	0	0	0	0	0	0	0
0xCC	**DFSDM_ CH6WDATR**	Res.	Res.	Res.	Res.	Res.	Res.	Res.	Res.	Res.	Res.	Res.	Res.	Res.	Res.	Res.	Res.	WDATA[15:0]															
	reset value																	0	0	0	0	0	0	0	0	0	0	0	0	0	0	0	0
0xD0	**DFSDM_ CH6DATINR**	INDAT1[15:0]																INDAT0[15:0]															
	reset value	0	0	0	0	0	0	0	0	0	0	0	0	0	0	0	0	0	0	0	0	0	0	0	0	0	0	0	0	0	0	0	0
0xD4 - 0xDC	Reserved	Res.	Res.	Res.	Res.	Res.	Res.	Res.	Res.	Res.	Res.	Res.	Res.	Res.	Res.	Res.	Res.	Res.	Res.	Res.	Res.	Res.	Res.	Res.	Res.	Res.	Res.	Res.	Res.	Res.	Res.	Res.	Res.
0xE0	**DFSDM_ CH7CFGR1**	Res.	Res.	Res.	Res.	Res.	Res.	Res.	Res.	Res.	Res.	Res.	Res.	Res.	Res.	Res.	Res.	DATPACK[1:0]		DATMPX[1:0]		Res.	Res.	Res.	CHINSEL	CHEN	CKABEN	SCDEN	Res.	SPICKSEL[1:0]		SITP[1:0]	
	reset value																	0	0	0	0				0	0	0	0		0	0	0	0
0xE4	**DFSDM_ CH7CFGR2**	OFFSET[23:0]																								DTRBS[4:0]					Res.	Res.	Res.
	reset value	0	0	0	0	0	0	0	0	0	0	0	0	0	0	0	0	0	0	0	0	0	0	0	0	0	0	0	0	0			
0xE8	**DFSDM_ CH7AWSCDR**	Res.	Res.	Res.	Res.	Res.	Res.	Res.	Res.	AWFORD[1:0]		Res.	AWFOSR[4:0]					BKSCD[3:0]				Res.	Res.	Res.	Res.	SCDT[7:0]							
	reset value									0	0		0	0	0	0	0	0	0	0	0					0	0	0	0	0	0	0	0
0xEC	**DFSDM_ CH7WDATR**	Res.	Res.	Res.	Res.	Res.	Res.	Res.	Res.	Res.	Res.	Res.	Res.	Res.	Res.	Res.	Res.	WDATA[15:0]															
	reset value																	0	0	0	0	0	0	0	0	0	0	0	0	0	0	0	0
0xF0	**DFSDM_ CH7DATINR**	INDAT1[15:0]																INDAT0[15:0]															
	reset value	0	0	0	0	0	0	0	0	0	0	0	0	0	0	0	0	0	0	0	0	0	0	0	0	0	0	0	0	0	0	0	0

Table 162. DFSDM register map and reset values (continued)

Offset	Register name	31	30	29	28	27	26	25	24	23	22	21	20	19	18	17	16	15	14	13	12	11	10	9	8	7	6	5	4	3	2	1	0
0xF4 - 0xFC	Reserved	Res.	Res.	Res.	Res.	Res.	Res.	Res.	Res.	Res.	Res.	Res.	Res.	Res.	Res.	Res.	Res.	Res.	Res.	Res.	Res.	Res.	Res.	Res.	Res.	Res.	Res.	Res.	Res.	Res.	Res.	Res.	Res.
0x100	**DFSDM_ FLT0CR1**	Res.	AWFSEL	FAST	Res.	Res.	RCH[2:0]			Res.	Res.	RDMAEN	Res.	RSYNC	RCONT	RSW START	Res.	Res.	JEXTEN[1:0]		Res.	Res.	JEXTSEL[2:0]			Res.	Res.	JDMAEN	JSCAN	JSYNC	Res.	JSW START	DFEN
	reset value		0	0			0	0	0			0		0	0	0			0	0			0	0	0			0	0	0		0	0
0x104	**DFSDM_ FLT0CR2**	Res.	Res.	Res.	Res.	Res.	Res.	Res.	Res.	AWDCH[7:0]								EXCH[7:0]								Res.	CKABIE	SCDIE	AWDIE	ROVRIE	JOVRIE	REOCIE	JEOCIE
	reset value									0	0	0	0	0	0	0	0	0	0	0	0	0	0	0	0		0	0	0	0	0	0	0
0x108	**DFSDM_ FLT0ISR**	SCDF[7:0]								CKABF[7:0]								Res.	RCIP	JCIP	Res.	Res.	Res.	Res.	Res.	Res.	Res.	Res.	AWDF	ROVRF	JOVRF	REOCF	JEOCF
	reset value	0	0	0	0	0	0	0	0	1	1	1	1	1	1	1	1		0	0									0	0	0	0	0
0x10C	**DFSDM_ FLT0ICR**	CLRSCDF[7:0]								CLRCKABF[7:0]								Res.	Res.	Res.	Res.	Res.	Res.	Res.	Res.	Res.	Res.	Res.	Res.	CLR ROVRF	CLR JOVRF	Res.	Res.
	reset value	0	0	0	0	0	0	0	0	0	0	0	0	0	0	0	0													0	0		
0x110	**DFSDM_ FLT0JCHGR**	Res.	Res.	Res.	Res.	Res.	Res.	Res.	Res.	Res.	Res.	Res.	Res.	Res.	Res.	Res.	Res.	Res.	Res.	Res.	Res.	Res.	Res.	Res.	Res.	JCHG[7:0]							
	reset value																									0	0	0	0	0	0	0	1
0x114	**DFSDM_ FLT0FCR**	FORD[2:0]			Res.	Res.	Res.	FOSR[9:0]										Res.	Res.	Res.	Res.	Res.	Res.	Res.	Res.	IOSR[7:0]							
	reset value	0	0	0				0	0	0	0	0	0	0	0	0	0									0	0	0	0	0	0	0	0
0x118	**DFSDM_ FLT0JDATAR**	JDATA[23:0]																								Res.	Res.	Res.	Res.	Res.	JDATACH [2:0]		
	reset value	0	0	0	0	0	0	0	0	0	0	0	0	0	0	0	0	0	0	0	0	0	0	0	0						0	0	0
0x11C	**DFSDM_ FLT0RDATAR**	RDATA[23:0]																								Res.	Res.	Res.	RPEND	Res.	RDATA CH[2:0] (1)		
	reset value	0	0	0	0	0	0	0	0	0	0	0	0	0	0	0	0	0	0	0	0	0	0	0	0				0		0	0	0
0x120	**DFSDM_ FLT0AWHTR**	AWHT[23:0]																								Res.	Res.	Res.	Res.	BKAWH[3:0]			
	reset value	0	0	0	0	0	0	0	0	0	0	0	0	0	0	0	0	0	0	0	0	0	0	0	0					0	0	0	0
0x124	**DFSDM_ FLT0AWLTR**	AWLT[23:0]																								Res.	Res.	Res.	Res.	BKAWL[3:0]			
	reset value	0	0	0	0	0	0	0	0	0	0	0	0	0	0	0	0	0	0	0	0	0	0	0	0					0	0	0	0
0x128	**DFSDM_ FLT0AWSR**	Res.	Res.	Res.	Res.	Res.	Res.	Res.	Res.	Res.	Res.	Res.	Res.	Res.	Res.	Res.	Res.	AWHTF[7:0]								AWLTF[7:0]							
	reset value																	0	0	0	0	0	0	0	0	0	0	0	0	0	0	0	0
0x12C	**DFSDM_ FLT0AWCFR**	Res.	Res.	Res.	Res.	Res.	Res.	Res.	Res.	Res.	Res.	Res.	Res.	Res.	Res.	Res.	Res.	CLRAWHTF[7:0]								CLRAWLTF[7:0]							
	reset value																	0	0	0	0	0	0	0	0	0	0	0	0	0	0	0	0

Table 162. DFSDM register map and reset values (continued)

Offset	Register name	31	30	29	28	27	26	25	24	23	22	21	20	19	18	17	16	15	14	13	12	11	10	9	8	7	6	5	4	3	2	1	0
0x130	DFSDM_ FLT0EXMAX	EXMAX[23:0]																								Res.	Res.	Res.	Res.	Res.	EXMAXCH[2:0]		
	reset value	1	0	0	0	0	0	0	0	0	0	0	0	0	0	0	0	0	0	0	0	0	0	0	0						0	0	0
0x134	DFSDM_ FLT0EXMIN	EXMIN[23:0]																								Res.	Res.	Res.	Res.	Res.	EXMINCH[2:0]		
	reset value	0	1	1	1	1	1	1	1	1	1	1	1	1	1	1	1	1	1	1	1	1	1	1	1						0	0	0
0x138	DFSDM_ FLT0CNVTIMR	CNVCNT[27:0]																												Res.	Res.	Res.	Res.
	reset value	0	0	0	0	0	0	0	0	0	0	0	0	0	0	0	0	0	0	0	0	0	0	0	0	0	0	0	0				
0x13C - 0x17C	Reserved	Res.	Res.	Res.	Res.	Res.	Res.	Res.	Res.	Res.	Res.	Res.	Res.	Res.	Res.	Res.	Res.	Res.	Res.	Res.	Res.	Res.	Res.	Res.	Res.	Res.	Res.	Res.	Res.	Res.	Res.	Res.	Res.
0x180	DFSDM_ FLT1CR1	Res.	AWFSEL	FAST	Res.	Res.	RCH[2:0]			Res.	Res.	RDMAEN	Res.	RSYNC	RCONT	RSW START	Res.	Res.	JEXTEN[1:0]		Res.	Res.	JEXTSEL[2:0]			Res.	Res.	JDMAEN	JSCAN	JSYNC	Res.	JSW START	DFEN
	reset value		0	0			0	0	0			0		0	0	0			0	0			0	0	0			0	0	0		0	0
0x184	DFSDM_ FLT1CR2	Res.	Res.	Res.	Res.	Res.	Res.	Res.	Res.	AWDCH[7:0]								EXCH[7:0]								Res.	Res.	Res.	AWDIE	ROVRIE	JOVRIE	REOCIE	JEOCIE
	reset value									0	0	0	0	0	0	0	0	0	0	0	0	0	0	0	0				0	0	0	0	0
0x188	DFSDM_ FLT1ISR	Res.	Res.	Res.	Res.	Res.	Res.	Res.	Res.	Res.	Res.	Res.	Res.	Res.	Res.	Res.	Res.	Res.	RCIP	JCIP	Res.	Res.	Res.	Res.	Res.	Res.	Res.	Res.	AWDF	ROVRF	JOVRF	REOCF	JEOCF
	reset value																		0	0									0	0	0	0	0
0x18C	DFSDM_ FLT1ICR	Res.	Res.	Res.	Res.	Res.	Res.	Res.	Res.	Res.	Res.	Res.	Res.	Res.	Res.	Res.	Res.	Res.	Res.	Res.	Res.	Res.	Res.	Res.	Res.	Res.	Res.	Res.	Res.	CLR ROVRF	CLR JOVRF	Res.	Res.
	reset value																													0	0		
0x190	DFSDM_ FLT1JCHGR	Res.	Res.	Res.	Res.	Res.	Res.	Res.	Res.	Res.	Res.	Res.	Res.	Res.	Res.	Res.	Res.	Res.	Res.	Res.	Res.	Res.	Res.	Res.	Res.	JCHG[7:0]							
	reset value																									0	0	0	0	0	0	0	1
0x194	DFSDM_ FLT1FCR	FORD[2:0]			Res.	Res.	Res.	FOSR[9:0]										Res.	Res.	Res.	Res.	Res.	Res.	Res.	Res.	IOSR[7:0]							
	reset value	0	0	0				0	0	0	0	0	0	0	0	0	0									0	0	0	0	0	0	0	0
0x198	DFSDM_ FLT1JDATAR	JDATA[23:0]																								Res.	Res.	Res.	Res.	Res.	JDATACH[2:0]		
	reset value	0	0	0	0	0	0	0	0	0	0	0	0	0	0	0	0	0	0	0	0	0	0	0	0						0	0	0

Table 162. DFSDM register map and reset values (continued)

Offset	Register name	31	30	29	28	27	26	25	24	23	22	21	20	19	18	17	16	15	14	13	12	11	10	9	8	7	6	5	4	3	2	1	0
0x19C	DFSDM_ FLT1RDATAR	RDATA[23:0]																								Res.	Res.	Res.	RPEND	Res.	RDATACH[2:0] (1)		
	reset value	0	0	0	0	0	0	0	0	0	0	0	0	0	0	0	0	0	0	0	0	0	0	0	0				0		0	0	0
0x1A0	DFSDM_ FLT1AWHTR	AWHT[23:0]																								Res.	Res.	Res.	Res.	BKAWH[3:0]			
	reset value	0	0	0	0	0	0	0	0	0	0	0	0	0	0	0	0	0	0	0	0	0	0	0	0					0	0	0	0
0x1A4	DFSDM_ FLT1AWLTR	AWLT[23:0]																								Res.	Res.	Res.	Res.	BKAWL[3:0]			
	reset value	0	0	0	0	0	0	0	0	0	0	0	0	0	0	0	0	0	0	0	0	0	0	0	0					0	0	0	0
0x1A8	DFSDM_ FLT1AWSR	Res.	Res.	Res.	Res.	Res.	Res.	Res.	Res.	Res.	Res.	Res.	Res.	Res.	Res.	Res.	Res.	AWHTF[7:0]								AWLTF[7:0]							
	reset value																	0	0	0	0	0	0	0	0	0	0	0	0	0	0	0	0
0x1AC	DFSDM_ FLT1AWCFR	Res.	Res.	Res.	Res.	Res.	Res.	Res.	Res.	Res.	Res.	Res.	Res.	Res.	Res.	Res.	Res.	CLRAWHTF[7:0]								CLRAWLTF[7:0]							
	reset value																	0	0	0	0	0	0	0	0	0	0	0	0	0	0	0	0
0x1B0	DFSDM_ FLT1EXMAX	EXMAX[23:0]																								Res.	Res.	Res.	Res.	Res.	EXMAXCH[2:0]		
	reset value	1	0	0	0	0	0	0	0	0	0	0	0	0	0	0	0	0	0	0	0	0	0	0	0						0	0	0
0x1B4	DFSDM_ FLT1EXMIN	EXMIN[23:0]																								Res.	Res.	Res.	Res.	Res.	EXMINCH[2:0]		
	reset value	0	1	1	1	1	1	1	1	1	1	1	1	1	1	1	1	1	1	1	1	1	1	1	1						0	0	0
0x1B8	DFSDM_ FLT1CNVTIMR	CNVCNT[27:0]																												Res.	Res.	Res.	Res.
	reset value	0	0	0	0	0	0	0	0	0	0	0	0	0	0	0	0	0	0	0	0	0	0	0	0	0	0	0	0				
0x1BC - 0x1FC	Reserved	Res.	Res.	Res.	Res.	Res.	Res.	Res.	Res.	Res.	Res.	Res.	Res.	Res.	Res.	Res.	Res.	Res.	Res.	Res.	Res.	Res.	Res.	Res.	Res.	Res.	Res.	Res.	Res.	Res.	Res.	Res.	Res.
0x200	DFSDM_ FLT2CR1	Res.	AWFSEL	FAST	Res.	Res.	RCH[2:0]			Res.	Res.	RDMAEN	Res.	RSYNC	RCONT	RSW START	Res.	Res.	JEXTEN[1:0]		Res.	Res.	JEXTSEL[2:0]			Res.	Res.	JDMAEN	JSCAN	JSYNC	Res.	JSW START	DFEN
	reset value		0	0			0	0	0			0		0	0	0			0	0			0	0	0			0	0	0		0	0
0x204	DFSDM_ FLT2CR2	Res.	Res.	Res.	Res.	Res.	Res.	Res.	Res.	AWDCH[7:0]								EXCH[7:0]								Res.	Res.	Res.	AWDIE	ROVRIE	JOVRIE	REOCIE	JEOCIE
	reset value									0	0	0	0	0	0	0	0	0	0	0	0	0	0	0	0				0	0	0	0	0
0x208	DFSDM_ FLT2ISR	Res.	Res.	Res.	Res.	Res.	Res.	Res.	Res.	Res.	Res.	Res.	Res.	Res.	Res.	Res.	Res.	Res.	RCIP	JCIP	Res.	Res.	Res.	Res.	Res.	Res.	Res.	Res.	AWDF	ROVRF	JOVRF	REOCF	JEOCF
	reset value																		0	0									0	0	0	0	0
0x20C	DFSDM_ FLT2ICR	Res.	Res.	Res.	Res.	Res.	Res.	Res.	Res.	Res.	Res.	Res.	Res.	Res.	Res.	Res.	Res.	Res.	Res.	Res.	Res.	Res.	Res.	Res.	Res.	Res.	Res.	Res.	Res.	CLR ROVRF	CLR JOVRF	Res.	Res.
	reset value																													0	0		

Table 162. DFSDM register map and reset values (continued)

Offset	Register name	31	30	29	28	27	26	25	24	23	22	21	20	19	18	17	16	15	14	13	12	11	10	9	8	7	6	5	4	3	2	1	0
0x210	DFSDM_ FLT2JCHGR	Res.	Res.	Res.	Res.	Res.	Res.	Res.	Res.	Res.	Res.	Res.	Res.	Res.	Res.	Res.	Res.	Res.	Res.	Res.	Res.	Res.	Res.	Res.	Res.	JCHG[7:0]							
	reset value																									0	0	0	0	0	0	0	1
0x214	DFSDM_ FLT2FCR	FORD[2:0]			Res.	Res.	Res.	FOSR[9:0]										Res.	Res.	Res.	Res.	Res.	Res.	Res.	Res.	IOSR[7:0]							
	reset value	0	0	0				0	0	0	0	0	0	0	0	0	0									0	0	0	0	0	0	0	0
0x218	DFSDM_ FLT2JDATAR	JDATA[23:0]																								Res.	Res.	Res.	Res.	Res.	JDATACH[2:0]		
	reset value	0	0	0	0	0	0	0	0	0	0	0	0	0	0	0	0	0	0	0	0	0	0	0	0						0	0	0
0x21C	DFSDM_ FLT2RDATAR	RDATA[23:0]																								Res.	Res.	Res.	RPEND	Res.	RDATA CH[2:0] (1)		
	reset value	0	0	0	0	0	0	0	0	0	0	0	0	0	0	0	0	0	0	0	0	0	0	0	0				0		0	0	0
0x220	DFSDM_ FLT2AWHTR	AWHT[23:0]																								Res.	Res.	Res.	Res.	BKAWH[3:0]			
	reset value	0	0	0	0	0	0	0	0	0	0	0	0	0	0	0	0	0	0	0	0	0	0	0	0					0	0	0	0
0x224	DFSDM_ FLT2AWLTR	AWLT[23:0]																								Res.	Res.	Res.	Res.	BKAWL[3:0]			
	reset value	0	0	0	0	0	0	0	0	0	0	0	0	0	0	0	0	0	0	0	0	0	0	0	0					0	0	0	0
0x228	DFSDM_ FLT2AWSR	Res.	Res.	Res.	Res.	Res.	Res.	Res.	Res.	Res.	Res.	Res.	Res.	Res.	Res.	Res.	Res.	AWHTF[7:0]								AWLTF[7:0]							
	reset value																	0	0	0	0	0	0	0	0	0	0	0	0	0	0	0	0
0x22C	DFSDM_ FLT2AWCFR	Res.	Res.	Res.	Res.	Res.	Res.	Res.	Res.	Res.	Res.	Res.	Res.	Res.	Res.	Res.	Res.	CLRAWHTF[7:0]								CLRAWLTF[7:0]							
	reset value																	0	0	0	0	0	0	0	0	0	0	0	0	0	0	0	0
0x230	DFSDM_ FLT2EXMAX	EXMAX[23:0]																								Res.	Res.	Res.	Res.	Res.	EXMAXCH[2:0]		
	reset value	1	0	0	0	0	0	0	0	0	0	0	0	0	0	0	0	0	0	0	0	0	0	0	0						0	0	0
0x234	DFSDM_ FLT2EXMIN	EXMIN[23:0]																								Res.	Res.	Res.	Res.	Res.	EXMINCH[2:0]		
	reset value	0	1	1	1	1	1	1	1	1	1	1	1	1	1	1	1	1	1	1	1	1	1	1	1						0	0	0
0x238	DFSDM_ FLT2CNVTIMR	CNVCNT[27:0]																												Res.	Res.	Res.	Res.
	reset value	0	0	0	0	0	0	0	0	0	0	0	0	0	0	0	0	0	0	0	0	0	0	0	0	0	0	0	0				
0x23C - 0x27C	Reserved	Res.	Res.	Res.	Res.	Res.	Res.	Res.	Res.	Res.	Res.	Res.	Res.	Res.	Res.	Res.	Res.	Res.	Res.	Res.	Res.	Res.	Res.	Res.	Res.	Res.	Res.	Res.	Res.	Res.	Res.	Res.	Res.
0x280	DFSDM_ FLT3CR1	Res.	AWFSEL	FAST	Res.	Res.	RCH[2:0]			Res.	Res.	RDMAEN	Res.	RSYNC	RCONT	RSW START	Res.	Res.	JEXTEN[1:0]		Res.	Res.	JEXTSEL[2:0]			Res.	Res.	JDMAEN	JSCAN	JSYNC	Res.	JSW START	DFEN
	reset value		0	0			0	0	0			0		0	0	0			0	0			0	0	0			0	0	0		0	0

Table 162. DFSDM register map and reset values (continued)

Offset	Register name	31	30	29	28	27	26	25	24	23	22	21	20	19	18	17	16	15	14	13	12	11	10	9	8	7	6	5	4	3	2	1	0
0x284	DFSDM_ FLT3CR2	Res.	Res.	Res.	Res.	Res.	Res.	Res.	Res.	AWDCH[7:0]								EXCH[7:0]								Res.	Res.	Res.	AWDIE	ROVRIE	JOVRIE	REOCIE	JEOCIE
	reset value									0	0	0	0	0	0	0	0	0	0	0	0	0	0	0	0				0	0	0	0	0
0x288	DFSDM_ FLT3ISR	Res.	Res.	Res.	Res.	Res.	Res.	Res.	Res.	Res.	Res.	Res.	Res.	Res.	Res.	Res.	Res.	Res.	RCIP	JCIP	Res.	Res.	Res.	Res.	Res.	Res.	Res.	Res.	AWDF	ROVRF	JOVRF	REOCF	JEOCF
	reset value																		0	0									0	0	0	0	0
0x28C	DFSDM_ FLT3ICR	Res.	Res.	Res.	Res.	Res.	Res.	Res.	Res.	Res.	Res.	Res.	Res.	Res.	Res.	Res.	Res.	Res.	Res.	Res.	Res.	Res.	Res.	Res.	Res.	Res.	Res.	Res.	Res.	CLR ROVRF	CLR JOVRF	Res.	Res.
	reset value																													0	0		
0x290	DFSDM_ FLT3JCHGR	Res.	Res.	Res.	Res.	Res.	Res.	Res.	Res.	Res.	Res.	Res.	Res.	Res.	Res.	Res.	Res.	Res.	Res.	Res.	Res.	Res.	Res.	Res.	Res.	JCHG[7:0]							
	reset value																									0	0	0	0	0	0	0	1
0x294	DFSDM_ FLT3FCR	FORD[2:0]			Res.	Res.	Res.	FOSR[9:0]										Res.	Res.	Res.	Res.	Res.	Res.	Res.	Res.	IOSR[7:0]							
	reset value	0	0	0				0	0	0	0	0	0	0	0	0	0									0	0	0	0	0	0	0	0
0x298	DFSDM_ FLT3JDATAR	JDATA[23:0]																								Res.	Res.	Res.	Res.	Res.	JDATACH[2:0]		
	reset value	0	0	0	0	0	0	0	0	0	0	0	0	0	0	0	0	0	0	0	0	0	0	0	0						0	0	0
0x29C	DFSDM_ FLT3RDATAR	RDATA[23:0]																								Res.	Res.	Res.	RPEND	Res.	RDATA CH[2:0] (1)		
	reset value	0	0	0	0	0	0	0	0	0	0	0	0	0	0	0	0	0	0	0	0	0	0	0	0				0		0	0	0
0x2A0	DFSDM_ FLT3AWHTR	AWHT[23:0]																								Res.	Res.	Res.	Res.	BKAWH[3:0]			
	reset value	0	0	0	0	0	0	0	0	0	0	0	0	0	0	0	0	0	0	0	0	0	0	0	0					0	0	0	0
0x2A4	DFSDM_ FLT3AWLTR	AWLT[23:0]																								Res.	Res.	Res.	Res.	BKAWL[3:0]			
	reset value	0	0	0	0	0	0	0	0	0	0	0	0	0	0	0	0	0	0	0	0	0	0	0	0					0	0	0	0
0x2A8	DFSDM_ FLT3AWSR	Res.	Res.	Res.	Res.	Res.	Res.	Res.	Res.	Res.	Res.	Res.	Res.	Res.	Res.	Res.	Res.	AWHTF[7:0]								AWLTF[7:0]							
	reset value																	0	0	0	0	0	0	0	0	0	0	0	0	0	0	0	0
0x2AC	DFSDM_ FLT3AWCFR	Res.	Res.	Res.	Res.	Res.	Res.	Res.	Res.	Res.	Res.	Res.	Res.	Res.	Res.	Res.	Res.	CLRAWHTF[7:0]								CLRAWLTF[7:0]							
	reset value																	0	0	0	0	0	0	0	0	0	0	0	0	0	0	0	0
0x2B0	DFSDM_ FLT3EXMAX	EXMAX[23:0]																								Res.	Res.	Res.	Res.	Res.	EXMAXCH[2:0]		
	reset value	1	0	0	0	0	0	0	0	0	0	0	0	0	0	0	0	0	0	0	0	0	0	0	0						0	0	0

Table 162. DFSDM register map and reset values (continued)

Offset	Register name	31	30	29	28	27	26	25	24	23	22	21	20	19	18	17	16	15	14	13	12	11	10	9	8	7	6	5	4	3	2	1	0
0x2B4	**DFSDM_ FLT3EXMIN**	EXMIN[23:0]																								Res.	Res.	Res.	Res.	Res.	EXMINCH[2:0]		
	reset value	0	1	1	1	1	1	1	1	1	1	1	1	1	1	1	1	1	1	1	1	1	1	1	1						0	0	0
0x2B8	**DFSDM_ FLT3CNVTIMR**	CNVCNT[27:0]																												Res.	Res.	Res.	Res.
	reset value	0	0	0	0	0	0	0	0	0	0	0	0	0	0	0	0	0	0	0	0	0	0	0	0	0	0	0	0				
0x2BC - 0x3FC	Reserved	Res.	Res.	Res.	Res.	Res.	Res.	Res.	Res.	Res.	Res.	Res.	Res.	Res.	Res.	Res.	Res.	Res.	Res.	Res.	Res.	Res.	Res.	Res.	Res.	Res.	Res.	Res.	Res.	Res.	Res.	Res.	Res.

1. Availability of the input from internal ADC is device dependent, see *Table 154: DFSDM1 implementation*.

Refer to *Section 2.2 on page 75* for the register boundary addresses.

25 Liquid crystal display controller (LCD)

This section applies to STM32L4x6 devices only.

25.1 Introduction

The LCD controller is a digital controller/driver for monochrome passive liquid crystal display (LCD) with up to 8 common terminals and up to 44 segment terminals to drive 176 (44x4) or 320 (40x8) LCD picture elements (pixels). The exact number of terminals depends on the device pinout as described in the datasheet.

The LCD is made up of several segments (pixels or complete symbols) that can be turned visible or invisible. Each segment consists of a layer of liquid crystal molecules aligned between two electrodes. When a voltage greater than a threshold voltage is applied across the liquid crystal, the segment becomes visible. The segment voltage must be alternated to avoid an electrophoresis effect in the liquid crystal (which degrades the display). The waveform across a segment must then be generated so as to avoid having a direct current (DC).

Glossary

Bias: Number of voltage levels used when driving an LCD. It is defined as 1/(number of voltage levels used to drive an LCD display - 1).

Boost circuit: Contrast controller circuit

Common: Electrical connection terminal connected to several segments (44 segments).

Duty ratio: Number defined as 1/(number of common terminals on a given LCD display).

Frame: One period of the waveform written to a segment.

Frame rate: Number of frames per second, that is, the number of times the LCD segments are energized per second.

LCD: (liquid crystal display) a passive display panel with terminals leading directly to a segment.

Segment: The smallest viewing element (a single bar or dot that is used to help create a character on an LCD display).

25.2 LCD main features

- Highly flexible frame rate control.
- Supports Static, 1/2, 1/3, 1/4 and 1/8 duty.
- Supports Static, 1/2, 1/3 and 1/4 bias.
- Double buffered memory allows data in LCD_RAM registers to be updated at any time by the application firmware without affecting the integrity of the data displayed.
  - LCD data RAM of up to 16 x 32-bit registers which contain pixel information (active/inactive)
- Software selectable LCD output voltage (contrast) from V_{LCDmin} to V_{LCDmax}.
- No need for external analog components:
  - A step-up converter is embedded to generate an internal V_{LCD} voltage higher than V_{DD}
  - Software selection between external and internal V_{LCD} voltage source. In case of an external source, the internal boost circuit is disabled to reduce power consumption
  - A resistive network is embedded to generate intermediate V_{LCD} voltages
  - The structure of the resistive network is configurable by software to adapt the power consumption to match the capacitive charge required by the LCD panel
  - Integrated voltage output buffers for higher LCD driving capability.
- The contrast can be adjusted using two different methods:
  - When using the internal step-up converter, the software can adjust V_{LCD} between V_{LCDmin} and V_{LCDmax}.
  - Programmable dead time (up to 8 phase periods) between frames.
- Full support of low-power modes: the LCD controller can be displayed in Sleep, Low-power run, Low-power sleep and Stop modes or can be fully disabled to reduce power consumption.
- Built in phase inversion for reduced power consumption and EMI (electromagnetic interference).
- Start of frame interrupt to synchronize the software when updating the LCD data RAM.
- Blink capability:
  - Up to 1, 2, 3, 4, 8 or all pixels which can be programmed to blink at a configurable frequency
  - Software adjustable blink frequency to achieve around 0.5 Hz, 1 Hz, 2 Hz or 4 Hz.
- Used LCD segment and common pins should be configured as GPIO alternate functions and unused segment and common pins can be used for general purpose I/O or for another peripheral alternate function.

Note: When the LCD relies on the internal step-up converter, the VLCD pin should be connected to V_{SS} with a capacitor. Its typical value is 1 µF (see C_{EXT} value in the product datasheets for further information).

25.3 LCD functional description

25.3.1 General description

The LCD controller has five main blocks (see *Figure 171*):

Figure 171. LCD controller block diagram

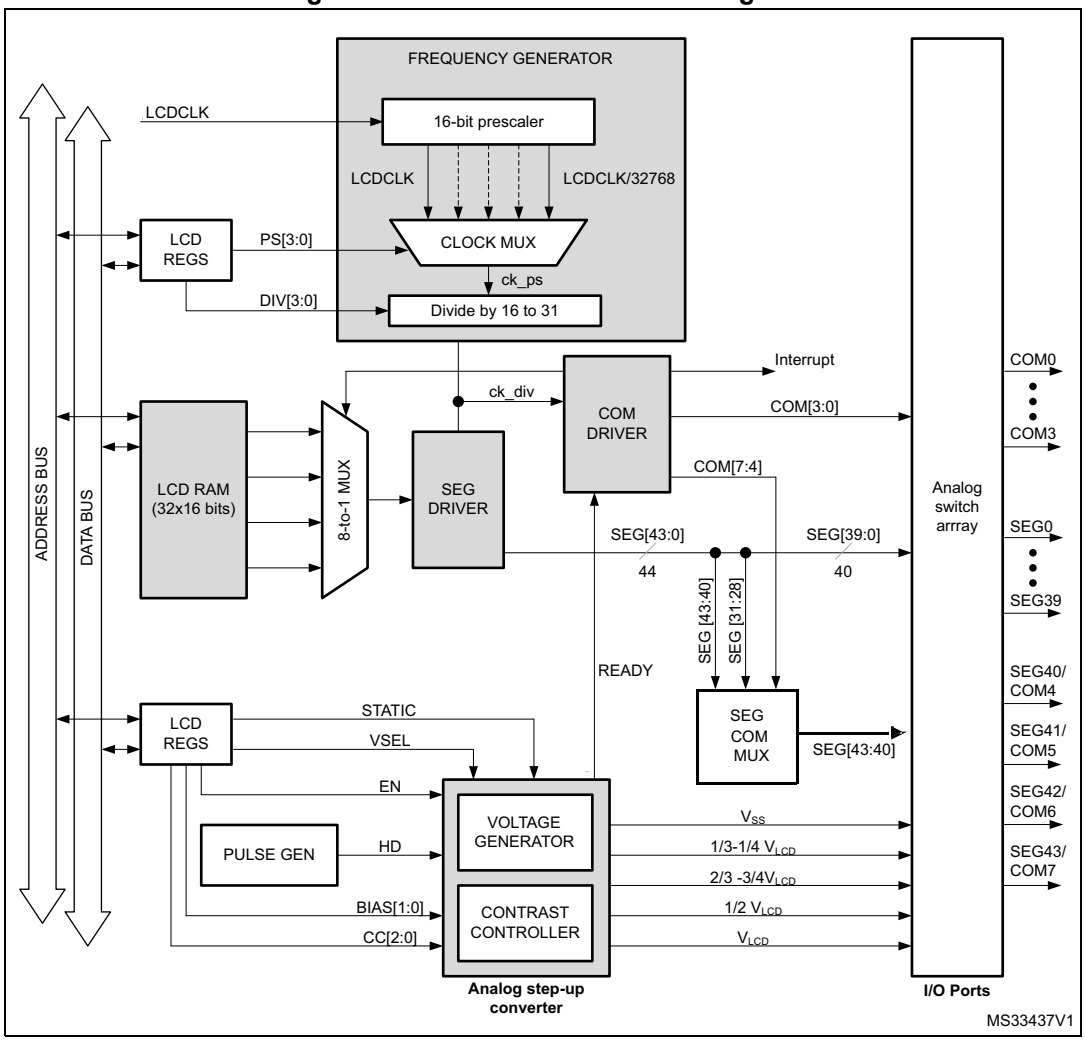

Note: LCDCLK is the same as RTCCLK. Refer to the RTC/LCD clock description in the RCC section of this manual.

The frequency generator allows you to achieve various LCD frame rates starting from an LCD input clock frequency (LCDCLK) which can vary from 32 kHz up to 1 MHz.

3 different clock sources can be used to provide the LCD clock (LCDCLK/RTCCLK):

- 32 kHz Low speed external RC (LSE)
- 32 kHz Low speed internal RC (LSI)
- High speed external (HSE) divided by 32

25.3.2 Frequency generator

This clock source must be stable in order to obtain accurate LCD timing and hence minimize DC voltage offset across LCD segments. The input clock LCDCLK can be divided by any value from 1 to 2^{15}x 31 (see *Section 25.6.2: LCD frame control register (LCD_FCR) on page 794*). The frequency generator consists of a prescaler (16-bit ripple counter) and a 16 to 31 clock divider. The PS[3:0] bits, in the LCD_FCR register, select LCDCLK divided by $2^{PS[3:0]}$. If a finer resolution rate is required, the DIV[3:0] bits, in the LCD_FCR register, can be used to divide the clock further by 16 to 31. In this way you can roughly scale the frequency, and then fine-tune it by linearly scaling the clock with the counter. The output of the frequency generator block is f_{ck_div} which constitutes the time base for the entire LCD controller. The ck_div frequency is equivalent to the LCD phase frequency, rather than the frame frequency (they are equal only in case of static duty). The frame frequency (f_{frame}) is obtained from f_{ck_div} by dividing it by the number of active common terminals (or by multiplying it for the duty). Thus the relation between the input clock frequency (f_{LCDCLK}) of the frequency generator and its output clock frequency f_{ck_div} is:

$$f_{ckdiv} = \frac{f_{LCDCLK}}{2^{PS} \times (16 + DIV)}$$

$$f_{frame} = f_{ckdiv} \times duty$$

This makes the frequency generator very flexible. An example of frame rate calculation is shown in *Table 163*.

Table 163. Example of frame rate calculation

LCDCLK	PS[3:0]	DIV[3:0]	Ratio	Duty	f_{frame}
32.768 kHz	3	1	136	1/8	30.12 Hz
32.768 kHz	4	1	272	1/4	30.12 Hz
32.768 kHz	4	6	352	1/3	31.03 Hz
32.768 kHz	5	1	544	1/2	30.12 Hz
32.768 kHz	6	1	1088	static	30.12 Hz
32.768 kHz	1	4	40	1/8	102.40 Hz
32.768 kHz	2	4	80	1/4	102.40 Hz
32.768 kHz	2	11	108	1/3	101.14 Hz
32.768 kHz	3	4	160	1/2	102.40 Hz
32.768 kHz	4	4	320	static	102.40 Hz
1.00 MHz	6	3	1216	1/8	102.80 Hz
1.00 MHz	7	3	2432	1/4	102.80 Hz
1.00 MHz	7	10	3328	1/3	100.16 Hz
1.00 MHz	8	3	4864	1/2	102.80 Hz
1.00 MHz	9	3	9728	static	102.80 Hz

The frame frequency must be selected to be within a range of around ~30 Hz to ~100 Hz and is a compromise between power consumption and the acceptable refresh rate. In

addition, a dedicated blink prescaler selects the blink frequency. This frequency is defined as:

$f_{BLINK} = f_{ck_div}/2^{(BLINKF + 3)}$,

with BLINKF[2:0] = 0, 1, 2, ... ,7

The blink frequency achieved is in the range of 0.5 Hz, 1 Hz, 2 Hz or 4 Hz.

25.3.3 Common driver

Common signals are generated by the common driver block (see *Figure 171*).

COM signal bias

Each COM signal has identical waveforms, but different phases. It has its max amplitude V_{LCD} or V_{SS} only in the corresponding phase of a frame cycle, while during the other phases, the signal amplitude is:

- 1/4 V_{LCD} or 3/4 V_{LCD} in case of 1/4 bias
- 1/3 V_{LCD} or 2/3 V_{LCD} in case of 1/3 bias
- and 1/2 V_{LCD} in case of 1/2 bias.

Selection between 1/2, 1/3 and 1/4 bias mode can be done through the BIAS bits in the LCD_CR register.

A pixel is activated when both of its corresponding common and segment lines are active during the same phase, it means when the voltage difference between common and segment is maximum during this phase. Common signals are phase inverted in order to reduce EMI. As shown in *Figure 172*, with phase inversion, there is a mean voltage of 1/2 V_{LCD} at the end of every odd cycle.

Figure 172. 1/3 bias, 1/4 duty

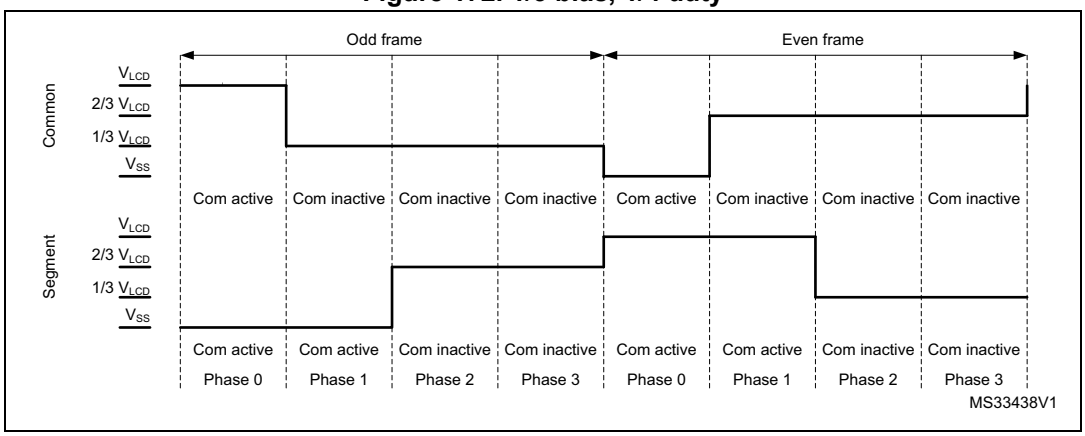

In case of 1/2 bias (BIAS = 01) the VLCD pin generates an intermediate voltage equal to 1/2 V_{LCD} on node b for odd and even frames (see *Figure 175*).

COM signal duty

Depending on the DUTY[2:0] bits in the LCD_CR register, the COM signals are generated with static duty (see *Figure 174*), 1/2 duty (see *Figure 175*), 1/3 duty (see *Figure 176*), 1/4 duty (see *Figure 177*) or 1/8 duty (see *Figure 178*).

COM[*n*] *n*[0 to 7] is active during phase *n* in the odd frame, so the COM pin is driven to V_{LCD}.

During phase *n* of the even frame the COM pin is driven to V_{SS}.

In the case of 1/3 or 1/4) bias:

- COM[*n*] is inactive during phases other than n so the COM pin is driven to 1/3 (1/4) V_{LCD} during odd frames and to 2/3 (3/4) V_{LCD} during even frames

In the case of 1/2 bias:

- If COM[*n*] is inactive during phases other than n, the COM pin is always driven (odd and even frame) to 1/2 V_{LCD}.

When static duty is selected, the segment lines are not multiplexed, which means that each segment output corresponds to one pixel. In this way only up to 44 pixels can be driven. COM[0] is always active while COM[7:1] are not used and are driven to V_{SS}.

When the LCDEN bit in the LCD_CR register is reset, all common lines are pulled down to V_{SS} and the ENS flag in the LCD_SR register becomes 0. Static duty means that COM[0] is always active and only two voltage levels are used for the segment and common lines: V_{LCD} and V_{SS}. A pixel is active if the corresponding SEG line has a voltage opposite to that of the COM, and inactive when the voltages are equal. In this way the LCD has maximum contrast (see *Figure 173*, *Figure 174*). In the *Figure 173* pixel 0 is active while pixel 1 is inactive.

Figure 173. Static duty case 1

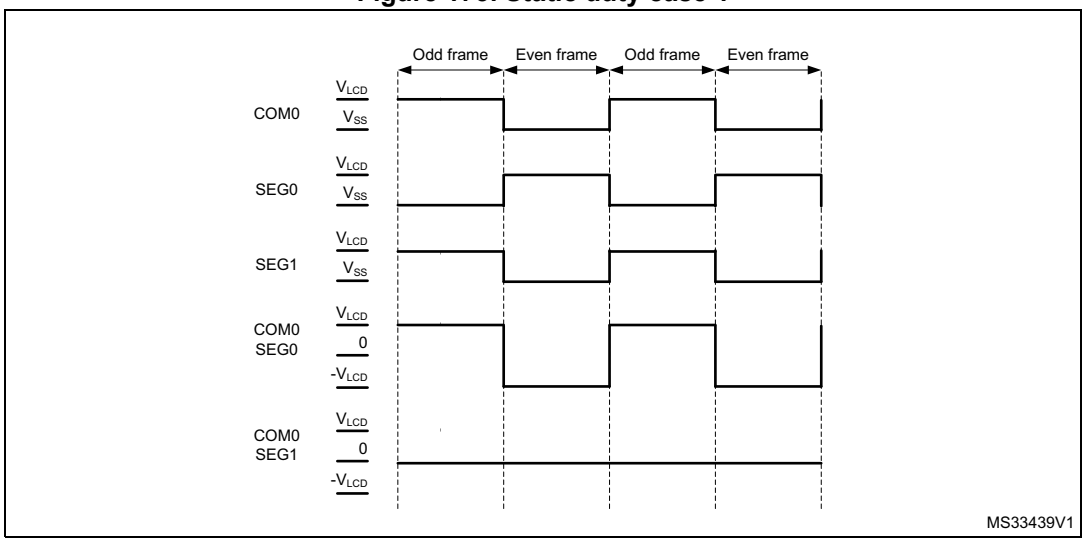

In each frame there is only one phase, this is why f_{frame} is equal to f_{LCD}. If 1/4 duty is selected there are four phases in a frame in which COM[0] is active during phase 0, COM[1] is active during phase 1, COM[2] is active during phase 2, and COM[3] is active during phase 3.

Figure 174. Static duty case 2

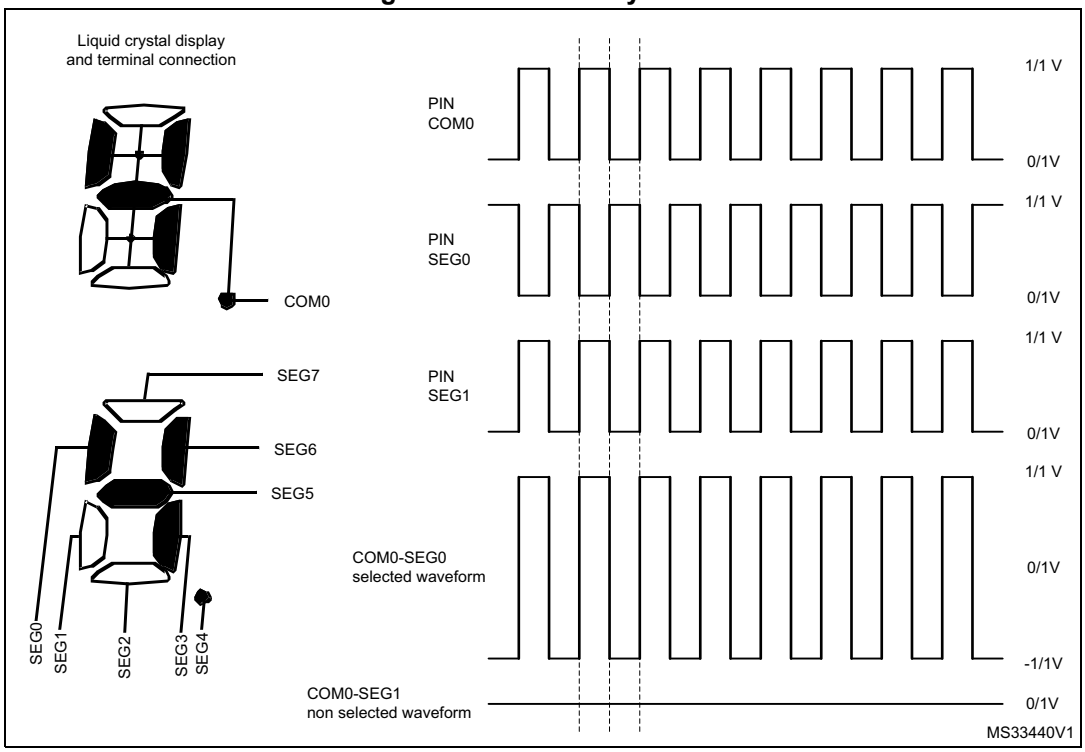

In this mode, the segment terminals are multiplexed and each of them control four pixels. A pixel is activated only when both of its corresponding SEG and COM lines are active in the same phase. In case of 1/4 duty, to deactivate pixel 0 connected to COM[0] the SEG[0] needs to be inactive during the phase 0 when COM[0] is active. To activate pixel 0 connected to COM[1], the SEG[0] needs to be active during phase 1 when COM[1] is active (see *Figure 177*). To activate pixels from 0 to 43 connected to COM[0], SEG[0:43] need to be active during phase 0 when COM[0] is active. These considerations can be extended to the other pixels.

8 to 1 Mux

When COM[0] is active the common driver block, also drives the 8 to 1 mux shown in *Figure 171* in order to select the content of first two RAM register locations. When *COM[7]* is active, the output of the 8 to 1 mux is the content of the last two RAM locations.

Figure 175. 1/2 duty, 1/2 bias

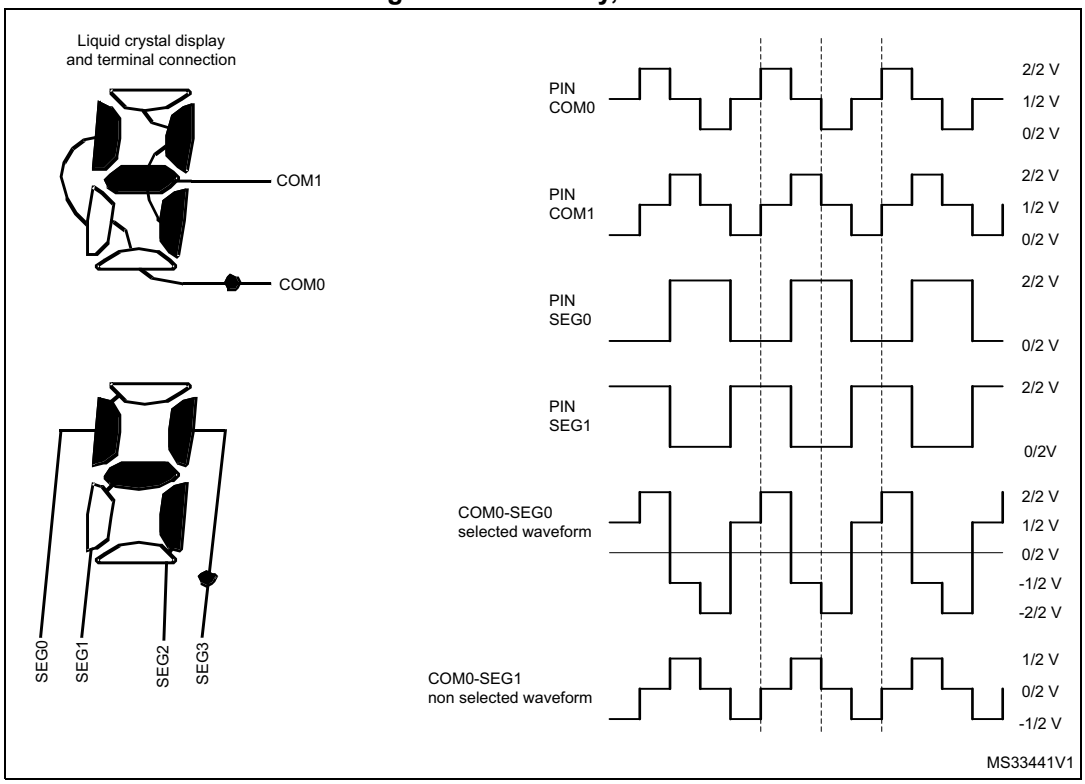

25.3.4 Segment driver

The segment driver block controls the SEG lines according to the pixel data coming from the 8 to 1 mux driven in each phase by the common driver block.

In the case of 1/4 or 1/8 duty

When COM[0] is active, the pixel information (active/inactive) related to the pixel connected to COM[0] (content of the first two LCD_RAM locations) goes through the 8 to 1 mux.

The SEG[*n*] pin *n* [0 to 43] is driven to V_{SS} (indicating pixel *n* is active when COM[0] is active) in phase 0 of the odd frame.

The SEG[*n*] pin is driven to V_{LCD} in phase 0 of the even frame. If pixel *n* is inactive then the SEG[*n*] pin is driven to 2/3 (2/4) V_{LCD} in the odd frame or 1/3 (2/4) V_{LCD} in the even frame (current inversion in V_{LCD} pad) (see *Figure 172*).

In case of 1/2 bias, if the pixel is inactive the SEG[*n*] pin is driven to V_{LCD} in the odd and to V_{SS} in the even frame.

When the LCD controller is disabled (LCDEN bit cleared in the LCD_CR register) then the SEG lines are pulled down to V_{SS}.

Figure 176. 1/3 duty, 1/3 bias

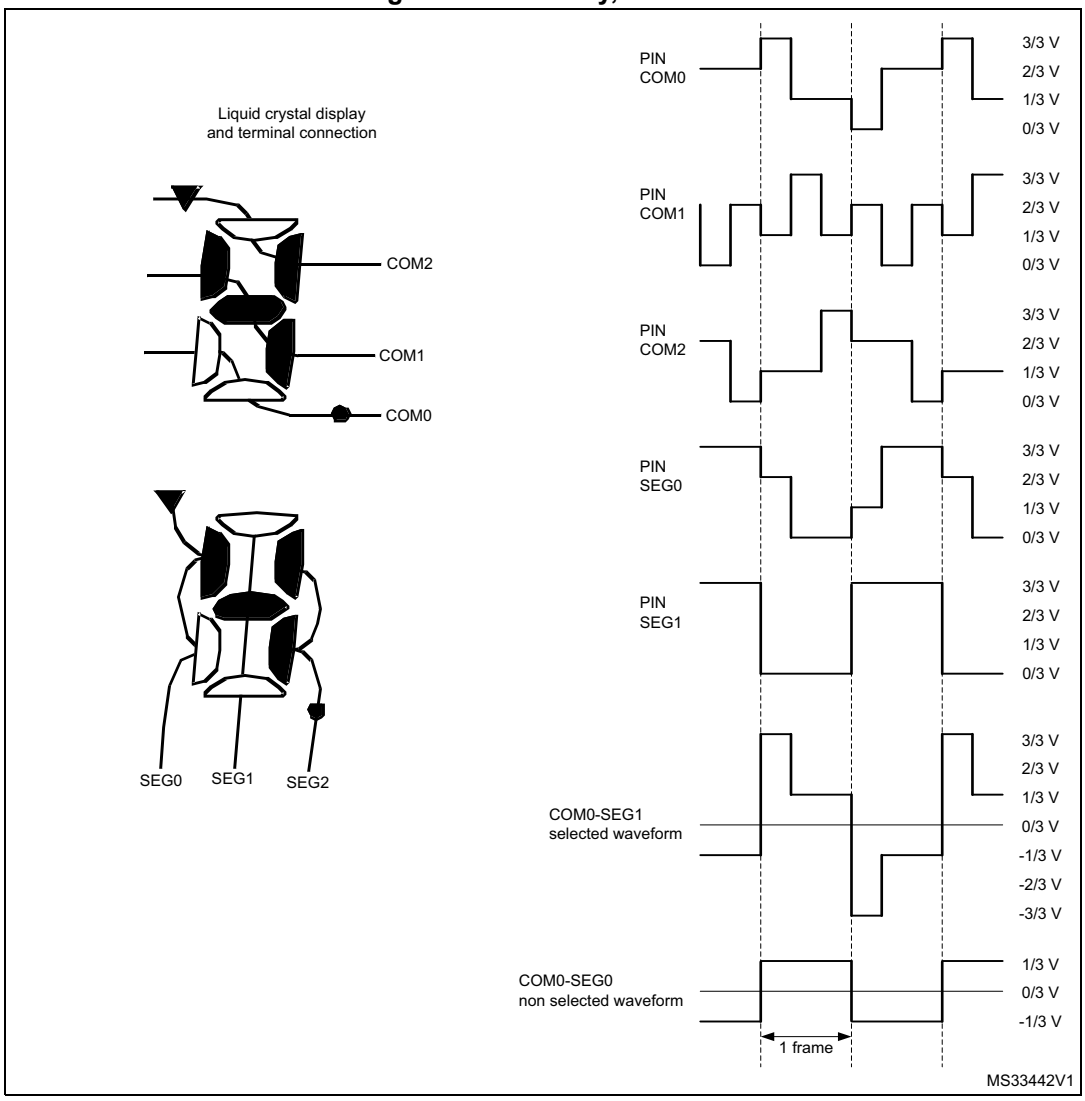

Figure 177. 1/4 duty, 1/3 bias

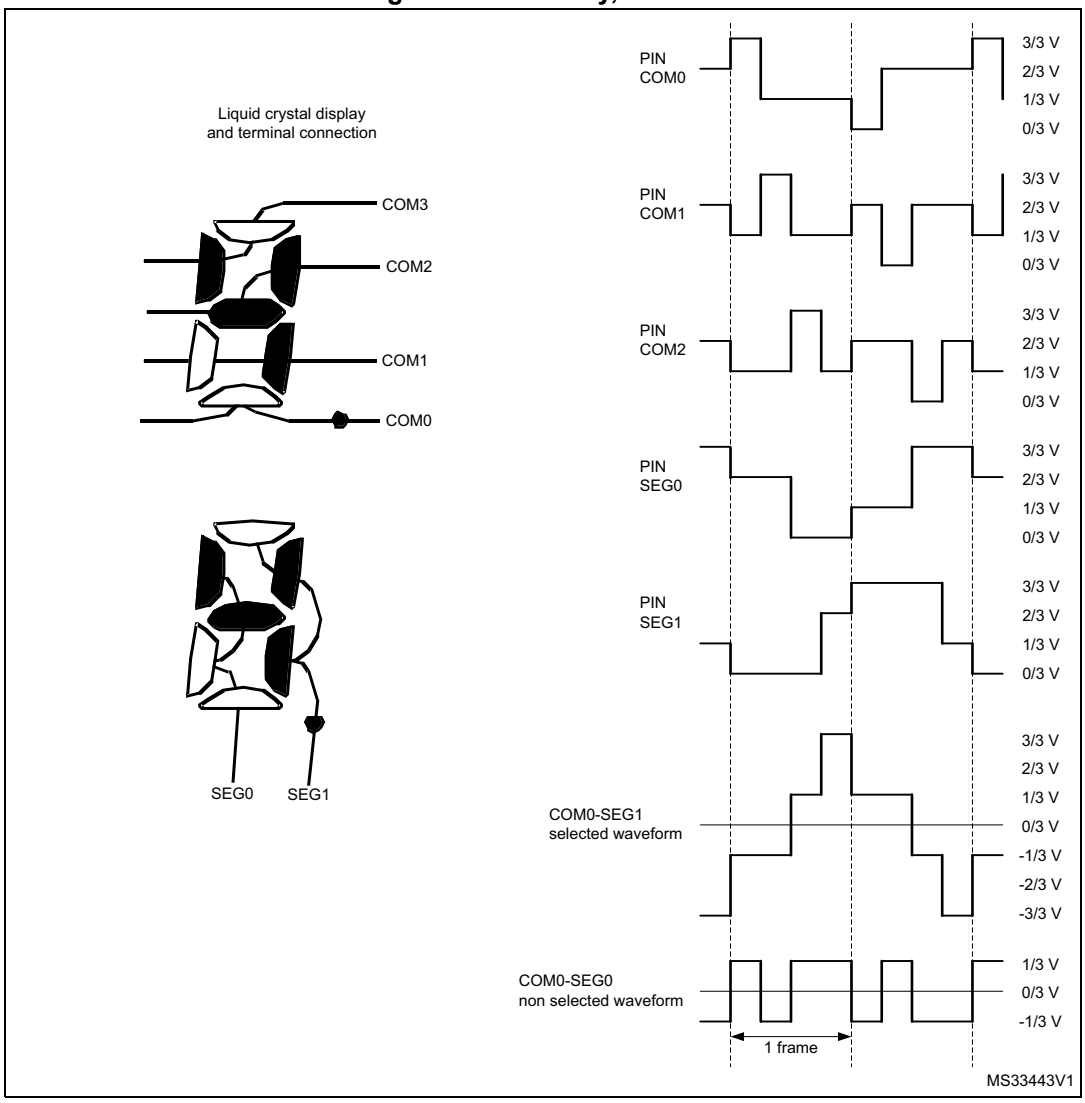

Figure 178. 1/8 duty, 1/4 bias

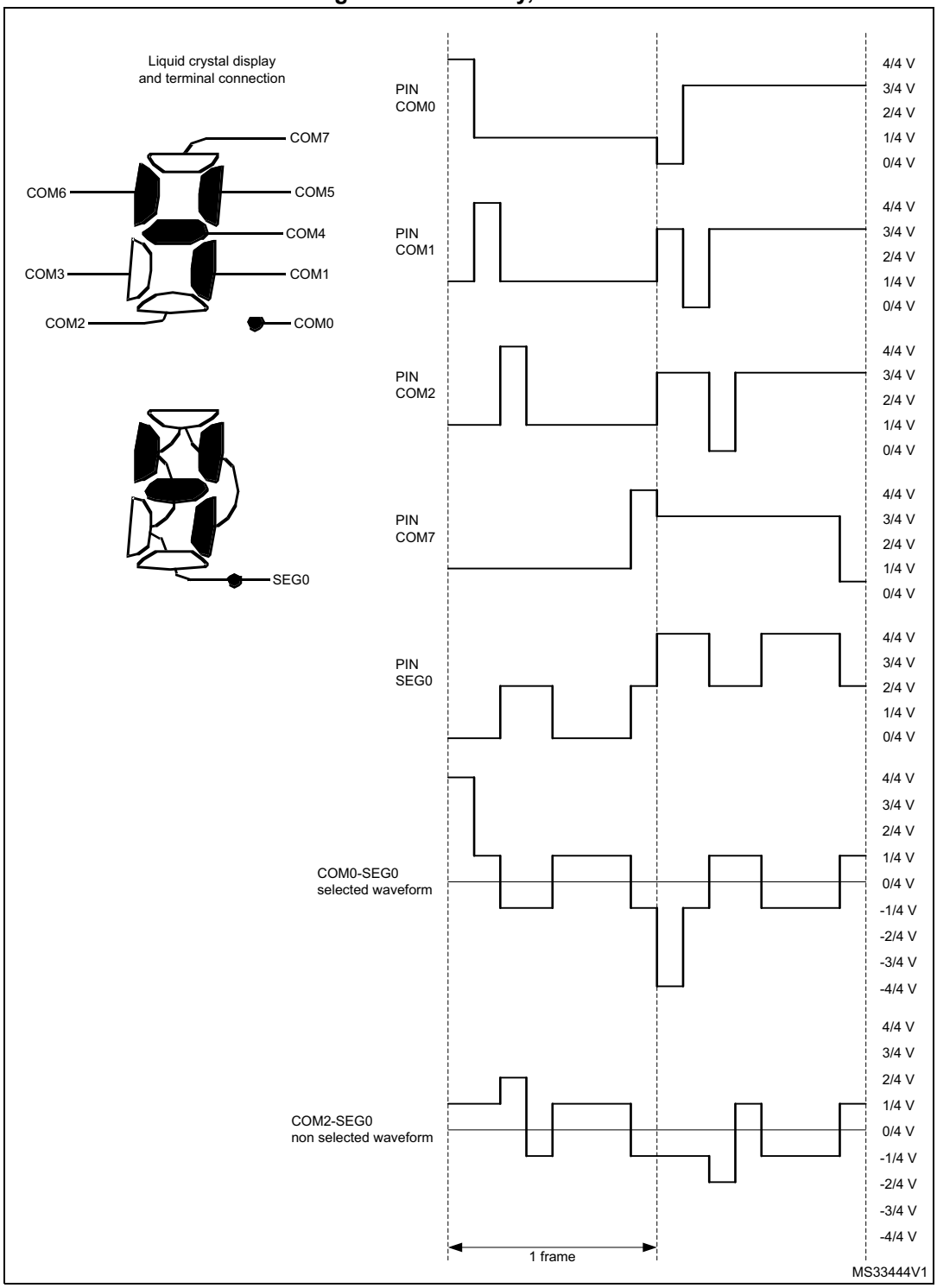

Blink

The segment driver also implements a programmable blink feature to allow some pixels to continuously switch on at a specific frequency. The blink mode can be configured by the BLINK[1:0] bits in the LCD_FCR register, making possible to blink up to 1, 2, 4, 8 or all pixels (see *Section 25.6.2: LCD frame control register (LCD_FCR)*). The blink frequency can be selected from eight different values using the BLINKF[2:0] bits in the LCD_FCR register.

Table 164 gives examples of different blink frequencies (as a function of ck_div frequency).

Table 164. Blink frequency

BLINKF[2:0] bits			ck_div frequency (with LCDCLK frequency of 32.768 kHz)			
			32 Hz	64 Hz	128 Hz	256 Hz
0	0	0	4.0 Hz	N/A	N/A	N/A
0	0	1	2.0 Hz	4.0 Hz	N/A	N/A
0	1	0	1.0 Hz	2.0 Hz	4.0 Hz	N/A
0	1	1	0.5 Hz	1.0 Hz	2.0 Hz	4.0 Hz
1	0	0	0.25 Hz	0.5 Hz	1.0 Hz	2.0 Hz
1	0	1	N/A	0.25 Hz	0.5 Hz	1.0 Hz
1	1	0	N/A	N/A	0.25 Hz	0.5 Hz
1	1	1	N/A	N/A	N/A	0.25 Hz

25.3.5 Voltage generator and contrast control

LCD supply source

The LCD power supply source may come from either the internal step-up converter or from an external voltage applied on the VLCD pin. Internal or external voltage source can be selected using the VSEL bit in the LCD_CR register. In case of external source selected, the internal boost circuit (step-up converter) is disabled to reduce power consumption.

When the step-up converter is selected as V_{LCD} source, the V_{LCD} value can be chosen among a wide set of values from V_{LCDmin} to V_{LCDmax} by means of CC[2:0] (Contrast Control) bits inside LCD_FCR (see *Section 25.6.2*) register. New values of V_{LCD} takes effect every beginning of a new frame.

When external power source is selected as V_{LCD} source, the V_{LCD} voltage must be chosen in the range of V_{LCDmin} to V_{LCDmax} (see datasheets). The contrast can then be controlled by programming a dead time between frames (see *Deadtime on page 784*).

A specific software sequence must be performed to configure the LCD depending on the LCD power supply source to be used. Here we consider the LCD controller is disabled prior to the configuration sequence.

In case the internal step-up converter is used (capacitor C_{EXT} on VLCD pin is required):

- Configure the VLCD pin as alternate function LCD in the GPIO_AFR register.
- Wait for the external capacitor C_{EXT} to be charged (C_{EXT} connected to the VLCD pin, approximately 2 ms for C_{EXT} = 1 µF)
- Set voltage source to internal source by resetting VSEL bit in the LCD_CR register
- Enable the LCD controller by setting LCDEN bit in the LCD_CR register

In case of LCD external power source is used:

- Set voltage source to external source by setting VSEL bit in the LCD_CR register
- Configure the VLCD pin as alternate function LCD in the GPIO_AFR register
- Enable the LCD controller by setting LCDEN bit in the LCD_CR register

LCD intermediate voltages

The LCD intermediate voltage levels are generated through an internal resistor divider network as shown in *Figure 179*.

The LCD voltage generator issues intermediate voltage levels between V_{SS} and V_{LCD}:

- 1/3 V_{LCD} and 2/3 V_{LCD} in case of 1/3 bias
- 1/4 V_{LCD}, 2/4 V_{LCD} and 3/4 V_{LCD} in case of 1/4 bias
- only 1/2 V_{LCD} in case of 1/2 bias.

LCD drive selection

Two resistive networks, one with low value resistors (R_L) and one with high value resistors (R_H) are respectively used to increase the current during transitions and reduce power consumption in static state.

The EN switch follows the rules described below (see *Figure 179*):

- If LCDEN bit in the LCD_CR register is set, the EN switch is closed.
- When clearing the LCDEN bit in the LCD_CR register, the EN switch is open at the end of the even frame in order to avoid a medium voltage level different from 0 considering the entire frame odd plus even.

The PON[2:0] (Pulse ON duration) bits in the LCD_FCR register configure the time during which R_L is enabled through the HD (high drive) switch when the levels of the common and segment lines change (see *Figure 179*). A short drive time will lead to lower power consumption, but displays with high internal resistance may need a longer drive time to achieve satisfactory contrast.

Figure 179. LCD voltage control

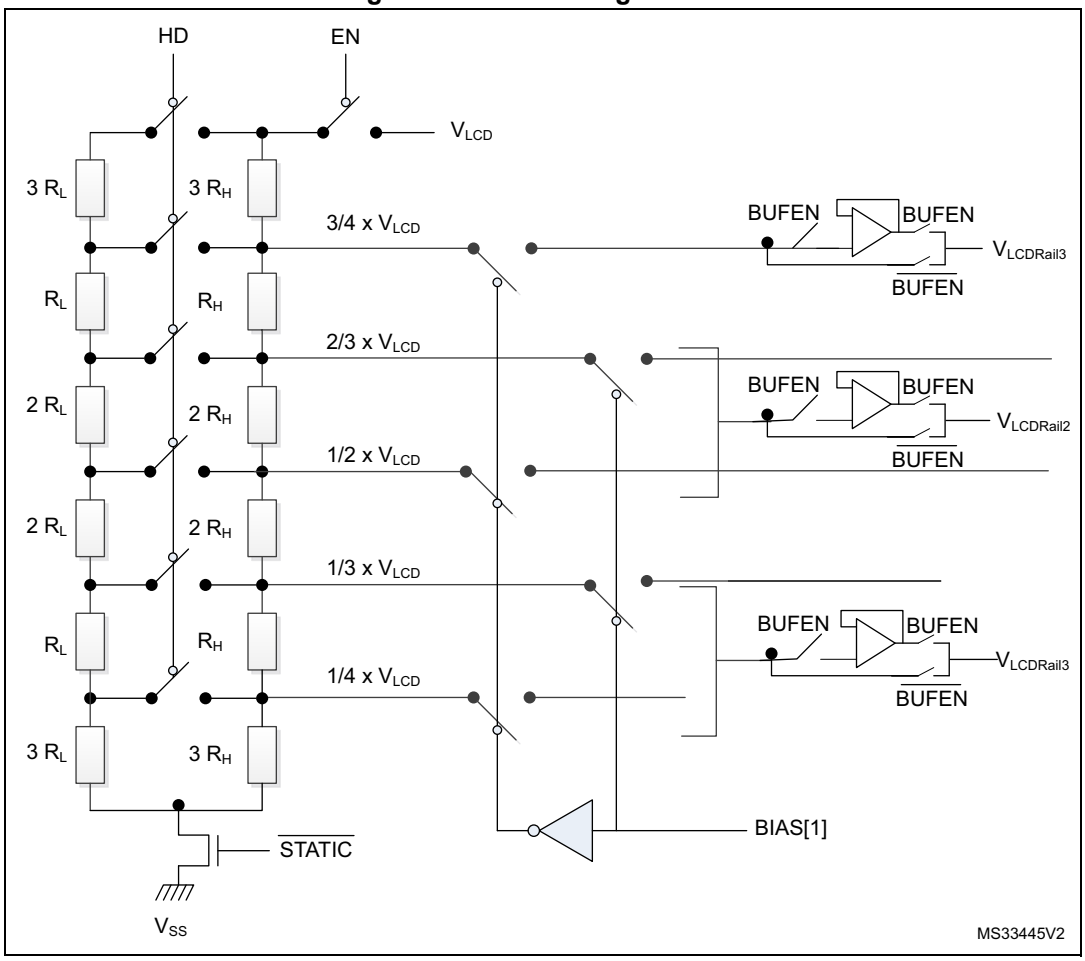

1. R_{LN} and R_{HN} are the low value resistance network and the high value resistance network, respectively.

The R_{LN} divider can be always switched on using the HD bit in the LCD_FCR configuration register (see *Section 25.6.2*).

The HD switch follows the rules described below:

- If the HD bit and the PON[2:0] bits in the LCD_FCR register are reset, then HD switch is open.
- If the HD bit in the LCD_FCR register is reset and the PON[2:0] bits in the LCD_FCR are different from 00 then, the HD switch is closed during the number of pulses defined in the PON[2:0] bits.
- If HD bit in the LCD_FCR register is 1 then HD switch is always closed.

Buffered mode

When voltage output buffers are enabled by setting BUFEN bit in the LCD_CR register, LCD driving capability is improved as buffers prevent the LCD capacitive loads from loading the resistor bridge unacceptably and interfering with its voltage generation. As a result we obtain more stable intermediate voltage levels thus improving RMS voltage applied to the LCD pixels.

In buffer mode, intermediate voltages are generated by the high value resistor bridge R_{HN} to reduce power consumption, the low value resistor bridge R_{LN} is automatically disabled whatever the HD bit or PON bits configuration.

Buffers can be used independently of the V_{LCD} supply source (internal or external) but can only be enabled or disabled when LCD controller is not activated.

After the LCDEN bit is activated, the RDY bit is set in the LCD_SR register to indicate that voltage levels are stable and the LCD controller can start to work.

Deadtime

In addition to using the CC[2:0] bits, the contrast can be controlled by programming a dead time between each frame. During the dead time the COM and SEG values are put to V_{SS}. The DEAD[2:0] bits in the LCD_FCR register can be used to program a time of up to eight phase periods. This dead time reduces the contrast without modifying the frame rate.

Figure 180. Deadtime

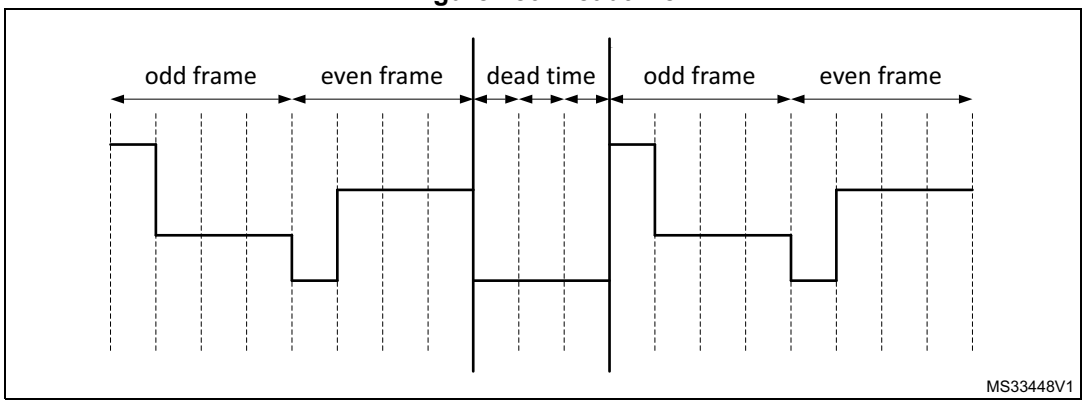

25.3.6 Double buffer memory

Using its double buffer memory the LCD controller ensures the coherency of the displayed information without having to use interrupts to control LCD_RAM modification.

The application software can access the first buffer level (LCD_RAM) through the APB interface. Once it has modified the LCD_RAM, it sets the UDR flag in the LCD_SR register. This UDR flag (update display request) requests the updated information to be moved into the second buffer level (LCD_DISPLAY).

This operation is done synchronously with the frame (at the beginning of the next frame), until the update is completed, the LCD_RAM is write protected and the UDR flag stays high. Once the update is completed another flag (UDD - Update Display Done) is set and generates an interrupt if the UDDIE bit in the LCD_FCR register is set.

The time it takes to update LCD_DISPLAY is, in the worst case, one odd and one even frame.

The update will not occur (UDR = 1 and UDD = 0) until the display is enabled (LCDEN = 1)

25.3.7 COM and SEG multiplexing

Output pins versus duty modes

The output pins consists of:

- SEG[43:0]
- COM[3:0]

Depending on the duty configuration, the COM and SEG output pins may have different functions:

- In static, 1/2, 1/3 and 1/4 duty modes there are up to 44 SEG pins and respectively 1, 2, 3 and 4 COM pins
- In 1/8 duty mode (DUTY[2:0] = 100), COM[7:4] outputs are available on the SEG[43:40] pins, reducing to the number of available segments to 40.

Remapping capability for small packages

Additionally, it is possible to remap 4 segments by setting the MUX_SEG bit in the LCD_CR register. This is particularly useful when using smaller device types with fewer external pins. When MUX_SEG is set, output pins SEG[43:40] have the same function as SEG[31:28].

This feature is available only if the mode 1/8 duty is not selected.

Check the availability of this feature referring to the pinout section of the product datasheet.

For the considered package, check the availability of the SEG/COM multiplexing pin as follow:

LCD_SEG[n-1]/LCD_COM7/LCD_SEG[31]

LCD_SEG[n-2]/LCD_COM6/LCD_SEG[30]

LCD_SEG[n-3]/LCD_COM5/LCD_SEG[29]

LCD_SEG[n-4]/LCD_COM4/LCD_SEG[28]

with n = number of segment for the considered package.

Summary of COM and SEG functions versus duty and remap

All the possible ways of multiplexing the COM and SEG functions are described in *Table 165*. *Figure 181* gives examples showing the signal connections to the external pins.

Table 165. Remapping capability

Configuration bits		SEG x COM		Output pin	Function
DUTY	MUX_SEG	WLCSP72 LQFP64	LQFP144 UFBGA132 LQFP100		
1/8	0/1	-	40x8	SEG[43:40]/SEG[31:28]/COM[7:4]	COM[7:4]
				COM[3:0]	COM[3:0]
				SEG[39:0]	SEG[39:0]
	0/1	28x8	-	SEG[43:40]/SEG[31:28]/COM[7:4]	COM[7:4]
				COM[3:0]	COM[3:0]
				SEG[27:0]	SEG[27:0]
1/4	0	-	44x4	COM[3:0]	COM[3:0]
				SEG[43:40]/SEG[31:28]/COM[7:4]	SEG[43:40]
				SEG[39:0]	SEG[39:0]
	1		40x4	COM[3:0]	COM[3:0]
				SEG[43:40]/SEG[31:28]/COM[7:4]	SEG[31:28]
				SEG[39:32]	SEG[39:32]
				SEG[31:28]	not used
				SEG[27:0]	SEG[27:0]
	0	28x4	-	COM[3:0]	COM[3:0]
				SEG[43:40]/SEG[31:28]/COM[7:4]	not used
				SEG[27:0]	SEG[27:0]
	1	32x4		COM[3:0]	COM[3:0]
				SEG[43:40]/SEG[31:28]/COM[7:4]	SEG[31:28]
				SEG[27:0]	SEG[27:0]

Table 165. Remapping capability (continued)

Configuration bits		SEG x COM		Output pin	Function
DUTY	MUX_SEG	WLCSP72 LQFP64	LQFP144 UFBGA132 LQFP100		
1/3	0	-	44x3	COM3	not used
				COM[2:0]	COM[2:0]
				SEG[43:40]/SEG[31:28]/COM[7:4]	SEG[43:40]
				SEG[39:0]	SEG[39:0]
	1		40x3	COM3	not used
				COM[2:0]	COM[2:0]
				SEG[43:40]/SEG[31:28]/COM[7:4]	SEG[31:28]
				SEG[39:32]	SEG[39:32]
				SEG[31:28]	not used
				SEG[27:0]	SEG[27:0]
	0	28x3	-	COM3	not used
				COM[2:0]	COM[2:0]
				SEG[43:40]/SEG[31:28]/COM[7:4]	not used
				SEG[31:0]	SEG[31:0]
	1	32x3		COM3	not used
				COM[2:0]	COM[2:0]
				SEG[43:40]/SEG[31:28]/COM[7:4]	SEG[31:28]
				SEG[27:0]	SEG[27:0]
1/2	0	-	44x2	COM[3:2]	not used
				COM[1:0]	COM[1:0]
				SEG[43:40]/SEG[31:28]/COM[7:4]	SEG[43:40]
				SEG[39:0]	SEG[39:0]
	1		40x2	COM[3:2]	not used
				COM[1:0]	COM[1:0]
				SEG[43:40]/SEG[31:28]/COM[7:4]	SEG[31:28]
				SEG[39:32]	SEG[39:32]
				SEG[31:28]	not used
				SEG[27:0]	SEG[27:0]

Table 165. Remapping capability (continued)

Configuration bits		SEG x COM		Output pin	Function
DUTY	MUX_SEG	WLCSP72 LQFP64	LQFP144 UFBGA132 LQFP100		
1/2	0	28x2	-	COM[3:2]	not used
				COM[1:0]	COM[1:0]
				SEG[43:40]/SEG[31:28]/COM[7:4]	not used
				SEG[27:0]	SEG[27:0]
	1	32x2		COM[3:2]	not used
				COM[1:0]	COM[1:0]
				SEG[43:40]/SEG[31:28]/COM[7:4]	SEG[31:28]
				SEG[27:0]	SEG[27:0]
STATIC	0	-	44x1	COM[3:1]	not used
				COM0	COM0
				SEG[43:40]/SEG[31:28]/COM[7:4]	SEG[43:40]
				SEG[39:0]	SEG[39:0]
	1		40x1	COM[3:1]	not used
				COM0	COM0
				SEG[43:40]/SEG[31:28]/COM[7:4]	SEG[31:28]
				SEG[39:32]	SEG[39:32]
				SEG[31:28]	not used
				SEG[27:0]	SEG[27:0]
	0	28x1	-	COM[3:1]	not used
				COM0	COM0
				SEG[43:40]/SEG[31:28]/COM[7:4]	not used
				SEG[27:0]	SEG[27:0]
	1	32x1		COM[3:1]	not used
				COM0	COM0
				SEG[43:40]/SEG[31:28]/COM[7:4]	SEG[31:28]
				SEG[27:0]	SEG[27:0]

Figure 181. SEG/COM mux feature example

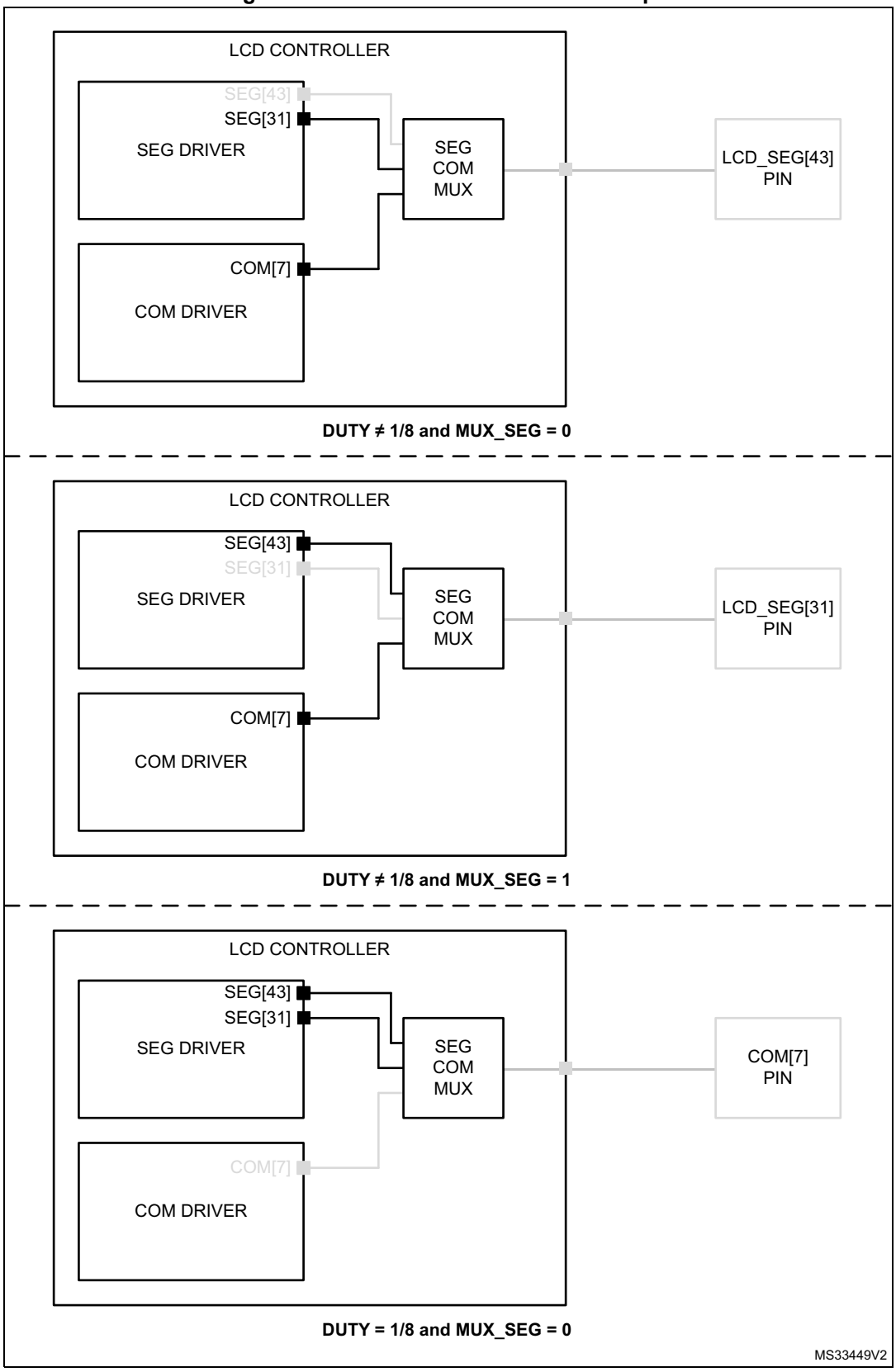

25.3.8 Flowchart

Figure 182. Flowchart example

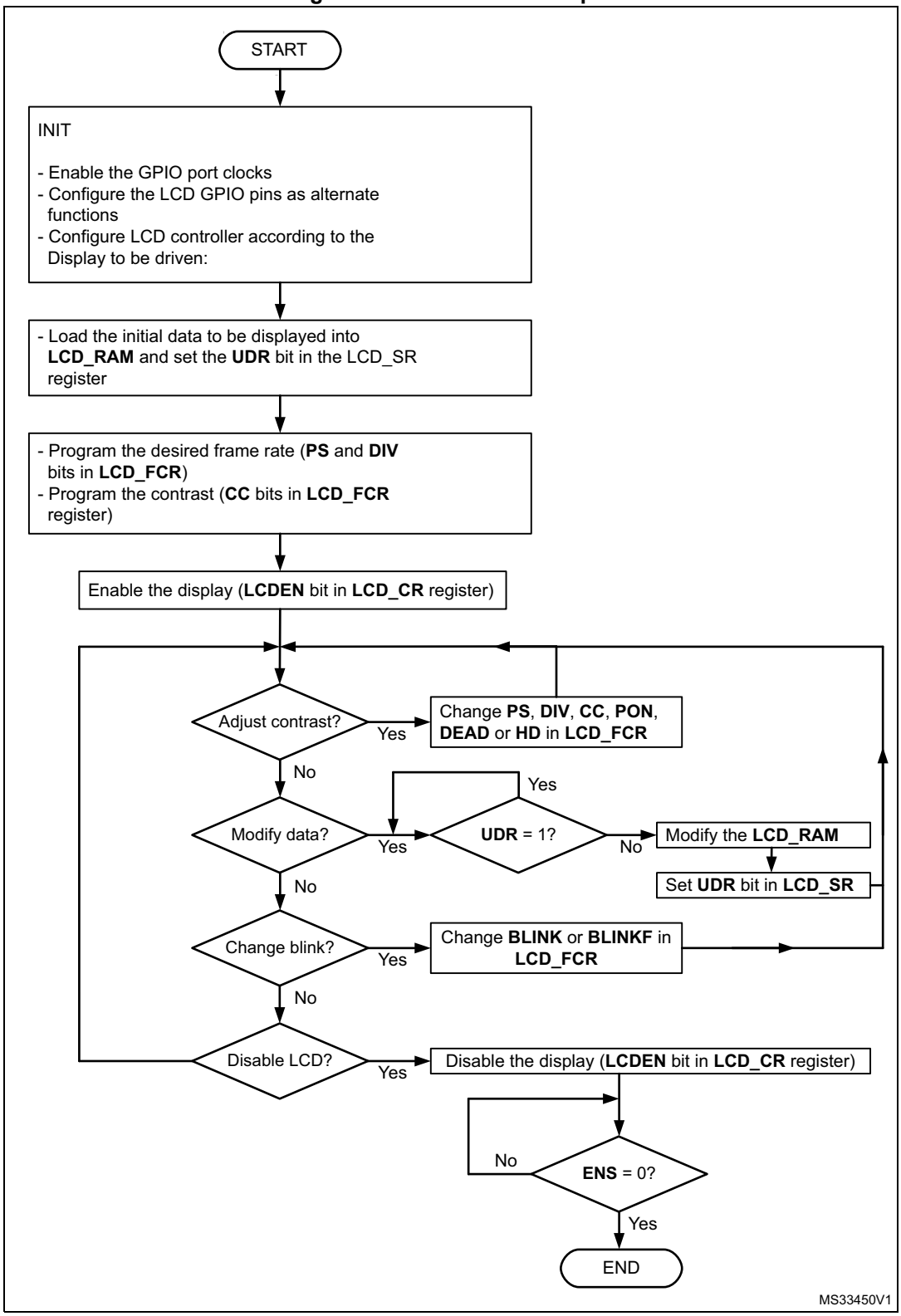

25.4 LCD low-power modes

the LCD controller can be displayed in Stop mode or can be fully disabled to reduce power consumption.

Table 166. LCD behavior in low-power modes

Mode	Description
Sleep	No effect. LCD interrupt causes the device to exit the Sleep mode.
Low-power run	No effect.
Low-power sleep	No effect. LCD interrupt causes the device to exit the Low-power sleep mode.
Stop 0	No effect. LCD interrupt causes the device to exit the Stop mode.
Stop 1	
Stop 2	
Standby	The LCD peripheral is powered down and must be reinitialized after exiting Standby or Shutdown mode.
Shutdown	

25.5 LCD interrupts

The table below gives the list of LCD interrupt requests.

Table 167. LCD interrupt requests

Interrupt event	Event flag	Event flag/Interrupt clearing method	Interrupt enable control bit
Start Of Frame (SOF)	SOF	Write SOFC =1	SOFIE
Update Display Done (UDD)	UDD	Write UDDC = 1	UDDIE

Start of frame (SOF)

The LCD start of frame interrupt is executed if the SOFIE (start of frame interrupt enable) bit is set (see *Section 25.6.2: LCD frame control register (LCD_FCR)*). SOF is cleared by writing the SOFC bit to 1 in the LCD_CLR register when executing the corresponding interrupt handling vector.

Update display done (UDD)

The LCD update display interrupt is executed if the UDDIE (update display done interrupt enable) bit is set (see *Section 25.6.2: LCD frame control register (LCD_FCR)*). UDD is cleared by writing the UDDC bit to 1 in the LCD_CLR register when executing the corresponding interrupt handling vector.

Depending on the product implementation, all these interrupts events can either share the same interrupt vector (LCD global interrupt), or be grouped into 2 interrupt vectors (LCD SOF interrupt and LCD UDD interrupt). Refer to the *Table 58: STM32L47x/L48x/L49x/L4Ax vector table* for details.

To enable the LCD interrupts, the following sequence is required:

1. Configure and enable the LCD IRQ channel in the NVIC
2. Configure the LCD to generate interrupts

25.6 LCD registers

The peripheral registers have to be accessed by words (32-bit).

25.6.1 LCD control register (LCD_CR)

Address offset: 0x00

Reset value: 0x0000 0000

31	30	29	28	27	26	25	24	23	22	21	20	19	18	17	16
Res.	Res.	Res.	Res.	Res.	Res.	Res.	Res.	Res.	Res.	Res.	Res.	Res.	Res.	Res.	Res.

15	14	13	12	11	10	9	8	7	6	5	4	3	2	1	0
Res.	Res.	Res.	Res.	Res.	Res.	Res.	BUFEN	MUX_SEG	BIAS[1:0]		DUTY[2:0]			VSEL	LCDEN
							rw	rw	rw	rw	rw	rw	rw	rw	rw

Bits 31:9 Reserved, must be kept at reset value

Bit 8 **BUFEN**: Voltage output buffer enable

This bit is used to enable/disable the voltage output buffer for higher driving capability.

0: Output buffer disabled
1: Output buffer enabled

Bit 7 **MUX_SEG**: Mux segment enable

This bit is used to enable SEG pin remapping. Four SEG pins can be multiplexed with SEG[31:28]. See *Section 25.3.7*.

0: SEG pin multiplexing disabled
1: SEG[31:28] are multiplexed with SEG[43:40]

Bits 6:5 **BIAS[1:0]**: Bias selector

These bits determine the bias used. Value 11 is forbidden.

00: Bias 1/4
01: Bias 1/2
10: Bias 1/3
11: Reserved

Bits 4:2 **DUTY[2:0]**: Duty selection

These bits determine the duty cycle. Values 101, 110 and 111 are forbidden.

000: Static duty
001: 1/2 duty
010: 1/3 duty
011: 1/4 duty
100: 1/8 duty
101: Reserved
110: Reserved
111: Reserved

Bit 1 **VSEL**: Voltage source selection

The VSEL bit determines the voltage source for the LCD.

0: Internal source (voltage step-up converter)

1: External source (VLCD pin)

Bit 0 **LCDEN**: LCD controller enable

This bit is set by software to enable the LCD Controller/Driver. It is cleared by software to turn off the LCD at the beginning of the next frame. When the LCD is disabled all COM and SEG pins are driven to V_{SS}.

0: LCD Controller disabled

1: LCD Controller enabled

Note: The VSEL, MUX_SEG, BIAS, DUTY and BUFEN bits are write-protected when the LCD is enabled (ENS bit in LCD_SR to 1).

25.6.2 LCD frame control register (LCD_FCR)

Address offset: 0x04

Reset value: 0x0000 0000

31	30	29	28	27	26	25	24	23	22	21	20	19	18	17	16
Res.	Res.	Res.	Res.	Res.	Res.	PS[3:0]				DIV[3:0]				BLINK[1:0]	
						rw	rw	rw	rw	rw	rw	rw	rw	rw	rw

15	14	13	12	11	10	9	8	7	6	5	4	3	2	1	0
BLINKF[2:0]			CC[2:0]			DEAD[2:0]			PON[2:0]			UDDIE	Res.	SOFIE	HD
rw	rw	rw	rw	rw	rw	rw	rw	rw	rw	rw	rw	rw		rw	rw

Bits 31:26 Reserved, must be kept at reset value

Bits 25:22 **PS[3:0]**: PS 16-bit prescaler

These bits are written by software to define the division factor of the PS 16-bit prescaler. ck_ps = LCDCLK/(2). See *Section 25.3.2*.

0000: ck_ps = LCDCLK

0001: ck_ps = LCDCLK/2

0002: ck_ps = LCDCLK/4

...

1111:ck_ps = LCDCLK/32768

Bits 21:18 **DIV[3:0]**: DIV clock divider

These bits are written by software to define the division factor of the DIV divider. See *Section 25.3.2*.

0000: ck_div = ck_ps/16

0001: ck_div = ck_ps/17

0002: ck_div = ck_ps/18

...

1111:ck_div = ck_ps/31

Bits 17:16 **BLINK[1:0]**: Blink mode selection

00: Blink disabled
01: Blink enabled on SEG[0], COM[0] (1 pixel)
10: Blink enabled on SEG[0], all COMs (up to 8 pixels depending on the programmed duty)
11: Blink enabled on all SEGs and all COMs (all pixels)

Bits 15:13 **BLINKF[2:0]**: Blink frequency selection

000: $f_{LCD}/8$
001: $f_{LCD}/16$
010: $f_{LCD}/32$
011: $f_{LCD}/64$
100: $f_{LCD}/128$
101: $f_{LCD}/256$
110: $f_{LCD}/512$
111: $f_{LCD}/1024$

Bits 12:10 **CC[2:0]**: Contrast control

These bits specify one of the V_{LCD} maximum voltages (independent of V_{DD}). It ranges from 2.60 V to 3.51V.

000: V_{LCD0}
001: V_{LCD1}
010: V_{LCD2}
011: V_{LCD3}
100: V_{LCD4}
101: V_{LCD5}
110: V_{LCD6}
111: V_{LCD7}

Refer to the product datasheet for the V_{LCDx} values.

Bits 9:7 **DEAD[2:0]**: Dead time duration

These bits are written by software to configure the length of the dead time between frames. During the dead time the COM and SEG voltage levels are held at 0 V to reduce the contrast without modifying the frame rate.

000: No dead time
001: 1 phase period dead time
010: 2 phase period dead time
.....
111: 7 phase period dead time

Bits 6:4 **PON[2:0]**: Pulse ON duration

These bits are written by software to define the pulse duration in terms of ck_ps pulses. A short pulse will lead to lower power consumption, but displays with high internal resistance may need a longer pulse to achieve satisfactory contrast.

Note that the pulse will never be longer than one half prescaled LCD clock period.

000: 0
001: 1/ck_ps
010: 2/ck_ps
011: 3/ck_ps
100: 4/ck_ps
101: 5/ck_ps
110: 6/ck_ps
111: 7/ck_ps

PON duration example with LCDCLK = 32.768 kHz and PS=0x03:

000: 0 µs
001: 244 µs
010: 488 µs
011: 782 µs
100: 976 µs
101: 1.22 ms
110: 1.46 ms
111: 1.71 ms

Bit 3 **UDDIE**: Update display done interrupt enable

This bit is set and cleared by software.

0: LCD Update Display Done interrupt disabled
1: LCD Update Display Done interrupt enabled

Bit 2 Reserved, must be kept at reset value

Bit 1 **SOFIE**: Start of frame interrupt enable

This bit is set and cleared by software.

0: LCD Start of Frame interrupt disabled
1: LCD Start of Frame interrupt enabled

Bit 0 **HD**: High drive enable

This bit is written by software to enable a low resistance divider. Displays with high internal resistance may need a longer drive time to achieve satisfactory contrast. This bit is useful in this case if some additional power consumption can be tolerated.

0: Permanent high drive disabled
1: Permanent high drive enabled. When HD=1, then the PON bits have to be programmed to 001.

Note: The data in this register can be updated any time, however the new values are applied only at the beginning of the next frame (except for UDDIE, SOFIE that affect the device behavior immediately).

The new value of CC[2:0] bits is also applied immediately but its effect on device is delayed at the beginning of next frame by the voltage generator.

Reading this register obtains the last value written in the register and not the configuration used to display the current frame.

Note: When BUFEN bit is set in the LCD_CR register, low resistor divider network is automatically disabled whatever the HD or PON[2:0] bits configuration.

25.6.3 LCD status register (LCD_SR)

Address offset: 0x08

Reset value: 0x0000 0020

31	30	29	28	27	26	25	24	23	22	21	20	19	18	17	16
Res.	Res.	Res.	Res.	Res.	Res.	Res.	Res.	Res.	Res.	Res.	Res.	Res.	Res.	Res.	Res.

15	14	13	12	11	10	9	8	7	6	5	4	3	2	1	0
Res.	Res.	Res.	Res.	Res.	Res.	Res.	Res.	Res.	Res.	FCRSF	RDY	UDD	UDR	SOF	ENS
										r	r	r	rs	r	r

Bits 31:6 Reserved, must be kept at reset value

Bit 5 **FCRSF**: LCD Frame Control Register Synchronization flag

This bit is set by hardware each time the LCD_FCR register is updated in the LCDCLK domain. It is cleared by hardware when writing to the LCD_FCR register.

0: LCD Frame Control Register not yet synchronized

1: LCD Frame Control Register synchronized

Bit 4 **RDY**: Ready flag

This bit is set and cleared by hardware. It indicates the status of the step-up converter.

0: Not ready

1: Step-up converter is enabled and ready to provide the correct voltage.

Bit 3 **UDD**: Update Display Done

This bit is set by hardware. It is cleared by writing 1 to the UDDC bit in the LCD_CLR register. The bit set has priority over the clear.

0: No event

1: Update Display Request done. A UDD interrupt is generated if the UDDIE bit in the LCD_FCR register is set.

Note: If the device is in Stop mode (PCLK not provided) UDD will not generate an interrupt even if UDDIE = 1.

If the display is not enabled the UDD interrupt will never occur.

Bit 2 **UDR**: Update display request

Each time software modifies the LCD_RAM it must set the UDR bit to transfer the updated data to the second level buffer. The UDR bit stays set until the end of the update and during this time the LCD_RAM is write protected.

0: No effect

1: Update Display request

Note: When the display is disabled, the update is performed for all LCD_DISPLAY locations. When the display is enabled, the update is performed only for locations for which commons are active (depending on DUTY). For example if DUTY = 1/2, only the LCD_DISPLAY of COM0 and COM1 will be updated.

Note: Writing 0 on this bit or writing 1 when it is already 1 has no effect. This bit can be cleared by hardware only. It can be cleared only when LCDEN = 1

Bit 1 **SOF**: Start of frame flag

This bit is set by hardware at the beginning of a new frame, at the same time as the display data is updated. It is cleared by writing a 1 to the SOFC bit in the LCD_CLR register. The bit clear has priority over the set.

0: No event

1: Start of Frame event occurred. An LCD Start of Frame Interrupt is generated if the SOFIE bit is set.

ENS: LCD enabled status

Bit 0 This bit is set and cleared by hardware. It indicates the LCD controller status.

0: LCD Controller disabled.

1: LCD Controller enabled

Note: The ENS bit is set immediately when the LCDEN bit in the LCD_CR goes from 0 to 1. On deactivation it reflects the real status of LCD so it becomes 0 at the end of the last displayed frame.

25.6.4 LCD clear register (LCD_CLR)

Address offset: 0x0C

Reset value: 0x0000 0000

31	30	29	28	27	26	25	24	23	22	21	20	19	18	17	16
Res.	Res.	Res.	Res.	Res.	Res.	Res.	Res.	Res.	Res.	Res.	Res.	Res.	Res.	Res.	Res.
15	14	13	12	11	10	9	8	7	6	5	4	3	2	1	0
Res.	Res.	Res.	Res.	Res.	Res.	Res.	Res.	Res.	Res.	Res.	Res.	UDDC	Res.	SOFC	Res.
												w		w	

Bits 31:4 Reserved, must be kept at reset value

Bit 3 **UDDC:** Update display done clear

This bit is written by software to clear the UDD flag in the LCD_SR register.

0: No effect

1: Clear UDD flag

Bit 2 Reserved, must be kept at reset value

Bit 1 **SOFC:** Start of frame flag clear

This bit is written by software to clear the SOF flag in the LCD_SR register.

0: No effect

1: Clear SOF flag

Bit 0 Reserved, must be kept at reset value

25.6.5 LCD display memory (LCD_RAM)

Address offset: 0x14 to 0x50

Reset value: 0x0000 0000

31	30	29	28	27	26	25	24	23	22	21	20	19	18	17	16
SEGMENT_DATA[31:16]															
rw	rw	rw	rw	rw	rw	rw	rw	rw	rw	rw	rw	rw	rw	rw	rw
15	14	13	12	11	10	9	8	7	6	5	4	3	2	1	0
SEGMENT_DATA[15:0]															
rw	rw	rw	rw	rw	rw	rw	rw	rw	rw	rw	rw	rw	rw	rw	rw

Bits 31:0 SEGMENT_DATA[31:0]

Each bit corresponds to one pixel of the LCD display.

0: Pixel inactive

1: Pixel active

25.6.6 LCD register map

The following table summarizes the LCD registers.

Table 168. LCD register map and reset values

Offset	Register	31	30	29	28	27	26	25	24	23	22	21	20	19	18	17	16	15	14	13	12	11	10	9	8	7	6	5	4	3	2	1	0
0x00	LCD_CR	Res.	Res.	Res.	Res.	Res.	Res.	Res.	Res.	Res.	Res.	Res.	Res.	Res.	Res.	Res.	Res.	Res.	Res.	Res.	Res.	Res.	Res.	Res.	BUFEN	MUX_SEG	BIAS[1:0]		DUTY [2:0]			VSEL	LCDEN
	Reset value																								0	0	0	0	0	0	0	0	0
0x04	LCD_FCR	Res.	Res.	Res.	Res.	Res.	Res.	PS[3:0]				DIV[3:0]				BLINK[1:0]		BLINKF[2:0]			CC [2:0]			DEAD [2:0]			PON [2:0]			UDDIE	Res.	SOFIE	HD
	Reset value							0	0	0	0	0	0	0	0	0	0	0	0	0	0	0	0	0	0	0	0	0	0	0		0	0
0x08	LCD_SR	Res.	Res.	Res.	Res.	Res.	Res.	Res.	Res.	Res.	Res.	Res.	Res.	Res.	Res.	Res.	Res.	Res.	Res.	Res.	Res.	Res.	Res.	Res.	Res.	Res.	Res.	FCRSF	RDY	UDD	UDR	SOF	ENS
	Reset value																											1	0	0	0	0	0
0x0C	LCD_CLR	Res.	Res.	Res.	Res.	Res.	Res.	Res.	Res.	Res.	Res.	Res.	Res.	Res.	Res.	Res.	Res.	Res.	Res.	Res.	Res.	Res.	Res.	Res.	Res.	Res.	Res.	Res.	Res.	UDDC	Res.	SOFC	Res.
	Reset value																													0		0	
0x14	LCD_RAM (COM0)	S31	S30	S29	S28	S27	S26	S25	S24	S23	S22	S21	S20	S19	S18	S17	S16	S15	S14	S13	S12	S11	S10	S09	S08	S07	S06	S05	S04	S03	S02	S01	S00
		0	0	0	0	0	0	0	0	0	0	0	0	0	0	0	0	0	0	0	0	0	0	0	0	0	0	0	0	0	0	0	0
0x18		Res.	Res.	Res.	Res.	Res.	Res.	Res.	Res.	Res.	Res.	Res.	Res.	Res.	Res.	Res.	Res.	Res.	Res.	Res.	Res.	S43	S42	S41	S40	S39	S38	S37	S36	S35	S34	S33	S32
																						0	0	0	0	0	0	0	0	0	0	0	0
0x1C	LCD_RAM (COM1)	S31	S30	S29	S28	S27	S26	S25	S24	S23	S22	S21	S20	S19	S18	S17	S16	S15	S14	S13	S12	S11	S10	S09	S08	S07	S06	S05	S04	S03	S02	S01	S00
		0	0	0	0	0	0	0	0	0	0	0	0	0	0	0	0	0	0	0	0	0	0	0	0	0	0	0	0	0	0	0	0
0x20		Res.	Res.	Res.	Res.	Res.	Res.	Res.	Res.	Res.	Res.	Res.	Res.	Res.	Res.	Res.	Res.	Res.	Res.	Res.	Res.	S43	S42	S41	S40	S39	S38	S37	S36	S35	S34	S33	S32
																						0	0	0	0	0	0	0	0	0	0	0	0
0x24	LCD_RAM (COM2)	S31	S30	S29	S28	S27	S26	S25	S24	S23	S22	S21	S20	S19	S18	S17	S16	S15	S14	S13	S12	S11	S10	S09	S08	S07	S06	S05	S04	S03	S02	S01	S00
		0	0	0	0	0	0	0	0	0	0	0	0	0	0	0	0	0	0	0	0	0	0	0	0	0	0	0	0	0	0	0	0
0x28		Res.	Res.	Res.	Res.	Res.	Res.	Res.	Res.	Res.	Res.	Res.	Res.	Res.	Res.	Res.	Res.	Res.	Res.	Res.	Res.	S43	S42	S41	S40	S39	S38	S37	S36	S35	S34	S33	S32
																						0	0	0	0	0	0	0	0	0	0	0	0
0x2C	LCD_RAM (COM3)	S31	S30	S29	S28	S27	S26	S25	S24	S23	S22	S21	S20	S19	S18	S17	S16	S15	S14	S13	S12	S11	S10	S09	S08	S07	S06	S05	S04	S03	S02	S01	S00
		0	0	0	0	0	0	0	0	0	0	0	0	0	0	0	0	0	0	0	0	0	0	0	0	0	0	0	0	0	0	0	0
0x30		Res.	Res.	Res.	Res.	Res.	Res.	Res.	Res.	Res.	Res.	Res.	Res.	Res.	Res.	Res.	Res.	Res.	Res.	Res.	Res.	S43	S42	S41	S40	S39	S38	S37	S36	S35	S34	S33	S32
																						0	0	0	0	0	0	0	0	0	0	0	0

Table 168. LCD register map and reset values (continued)

Offset	Register	31	30	29	28	27	26	25	24	23	22	21	20	19	18	17	16	15	14	13	12	11	10	9	8	7	6	5	4	3	2	1	0
0x34	LCD_RAM (COM4)	S31	S30	S29	S28	S27	S26	S25	S24	S23	S22	S21	S20	S19	S18	S17	S16	S15	S14	S13	S12	S11	S10	S09	S08	S07	S06	S05	S04	S03	S02	S01	S00
		0	0	0	0	0	0	0	0	0	0	0	0	0	0	0	0	0	0	0	0	0	0	0	0	0	0	0	0	0	0	0	0
0x38		Res.	Res.	Res.	Res.	Res.	Res.	Res.	Res.	Res.	Res.	Res.	Res.	Res.	Res.	Res.	Res.	Res.	Res.	Res.	Res.	Res.	Res.	Res.	Res.	S39	S38	S37	S36	S35	S34	S33	S32
																										0	0	0	0	0	0	0	0
0x3C	LCD_RAM (COM5)	S31	S30	S29	S28	S27	S26	S25	S24	S23	S22	S21	S20	S19	S18	S17	S16	S15	S14	S13	S12	S11	S10	S09	S08	S07	S06	S05	S04	S03	S02	S01	S00
		0	0	0	0	0	0	0	0	0	0	0	0	0	0	0	0	0	0	0	0	0	0	0	0	0	0	0	0	0	0	0	0
0x40		Res.	Res.	Res.	Res.	Res.	Res.	Res.	Res.	Res.	Res.	Res.	Res.	Res.	Res.	Res.	Res.	Res.	Res.	Res.	Res.	Res.	Res.	Res.	Res.	S39	S38	S37	S36	S35	S34	S33	S32
		0	0	0	0	0	0	0	0	0	0	0	0	0	0	0	0	0	0	0	0	0	0	0	0	0	0	0	0	0	0	0	0
0x44	LCD_RAM (COM6)	S31	S30	S29	S28	S27	S26	S25	S24	S23	S22	S21	S20	S19	S18	S17	S16	S15	S14	S13	S12	S11	S10	S09	S08	S07	S06	S05	S04	S03	S02	S01	S00
		0	0	0	0	0	0	0	0	0	0	0	0	0	0	0	0	0	0	0	0	0	0	0	0	0	0	0	0	0	0	0	0
0x48		Res.	Res.	Res.	Res.	Res.	Res.	Res.	Res.	Res.	Res.	Res.	Res.	Res.	Res.	Res.	Res.	Res.	Res.	Res.	Res.	Res.	Res.	Res.	Res.	S39	S38	S37	S36	S35	S34	S33	S32
		0	0	0	0	0	0	0	0	0	0	0	0	0	0	0	0	0	0	0	0	0	0	0	0	0	0	0	0	0	0	0	0
0x4C	LCD_RAM (COM7)	S31	S30	S29	S28	S27	S26	S25	S24	S23	S22	S21	S20	S19	S18	S17	S16	S15	S14	S13	S12	S11	S10	S09	S08	S07	S06	S05	S04	S03	S02	S01	S00
		0	0	0	0	0	0	0	0	0	0	0	0	0	0	0	0	0	0	0	0	0	0	0	0	0	0	0	0	0	0	0	0
0x50		Res.	Res.	Res.	Res.	Res.	Res.	Res.	Res.	Res.	Res.	Res.	Res.	Res.	Res.	Res.	Res.	Res.	Res.	Res.	Res.	Res.	Res.	Res.	Res.	S39	S38	S37	S36	S35	S34	S33	S32
		0	0	0	0	0	0	0	0	0	0	0	0	0	0	0	0	0	0	0	0	0	0	0	0	0	0	0	0	0	0	0	0

Refer to *Section 2.2 on page 75* for the *Register boundary addresses* table.

26 Touch sensing controller (TSC)

26.1 Introduction

The touch sensing controller provides a simple solution for adding capacitive sensing functionality to any application. Capacitive sensing technology is able to detect finger presence near an electrode that is protected from direct touch by a dielectric (for example glass, plastic). The capacitive variation introduced by the finger (or any conductive object) is measured using a proven implementation based on a surface charge transfer acquisition principle.

The touch sensing controller is fully supported by the STMTouch touch sensing firmware library, which is free to use and allows touch sensing functionality to be implemented reliably in the end application.

26.2 TSC main features

The touch sensing controller has the following main features:

- Proven and robust surface charge transfer acquisition principle
- Supports up to 24 capacitive sensing channels
- Up to 8 capacitive sensing channels can be acquired in parallel offering a very good response time
- Spread spectrum feature to improve system robustness in noisy environments
- full hardware management of the charge transfer acquisition sequence
- Programmable charge transfer frequency
- Programmable sampling capacitor I/O pin
- Programmable channel I/O pin
- Programmable max count value to avoid long acquisition when a channel is faulty
- Dedicated end of acquisition and max count error flags with interrupt capability
- One sampling capacitor for up to 3 capacitive sensing channels to reduce the system components
- Compatible with proximity, touchkey, linear and rotary touch sensor implementation
- Designed to operate with STMTouch touch sensing firmware library

Note: The number of capacitive sensing channels is dependent on the size of the packages and subject to IO availability.

26.3 TSC functional description

26.3.1 TSC block diagram

The block diagram of the touch sensing controller is shown in *Figure 183: TSC block diagram*.

Figure 183. TSC block diagram

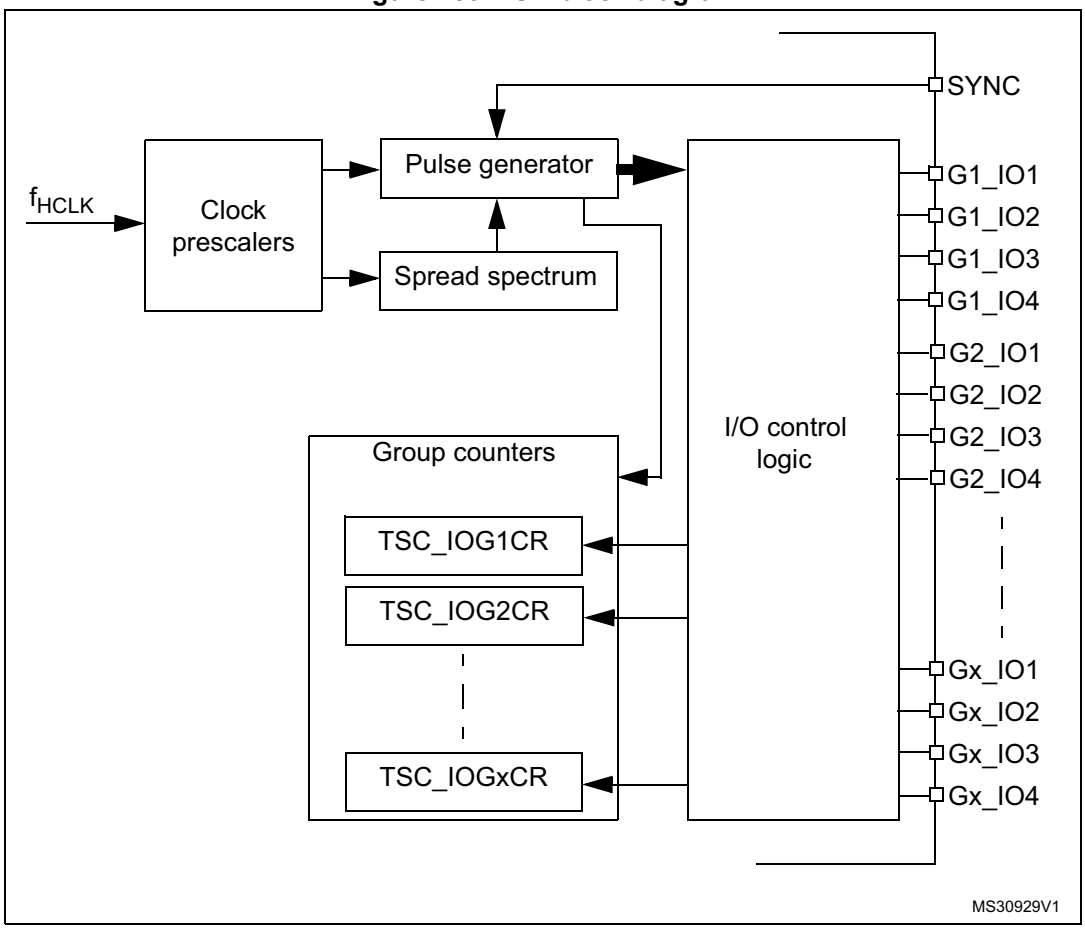

26.3.2 Surface charge transfer acquisition overview

The surface charge transfer acquisition is a proven, robust and efficient way to measure a capacitance. It uses a minimum number of external components to operate with a single ended electrode type. This acquisition is designed around an analog I/O group which is composed of four GPIOs (see *Figure 184*). Several analog I/O groups are available to allow the acquisition of several capacitive sensing channels simultaneously and to support a larger number of capacitive sensing channels. Within a same analog I/O group, the acquisition of the capacitive sensing channels is sequential.

One of the GPIOs is dedicated to the sampling capacitor C_S. Only one sampling capacitor I/O per analog I/O group must be enabled at a time.

The remaining GPIOs are dedicated to the electrodes and are commonly called channels. For some specific needs (such as proximity detection), it is possible to simultaneously enable more than one channel per analog I/O group.

Figure 184. Surface charge transfer analog I/O group structure

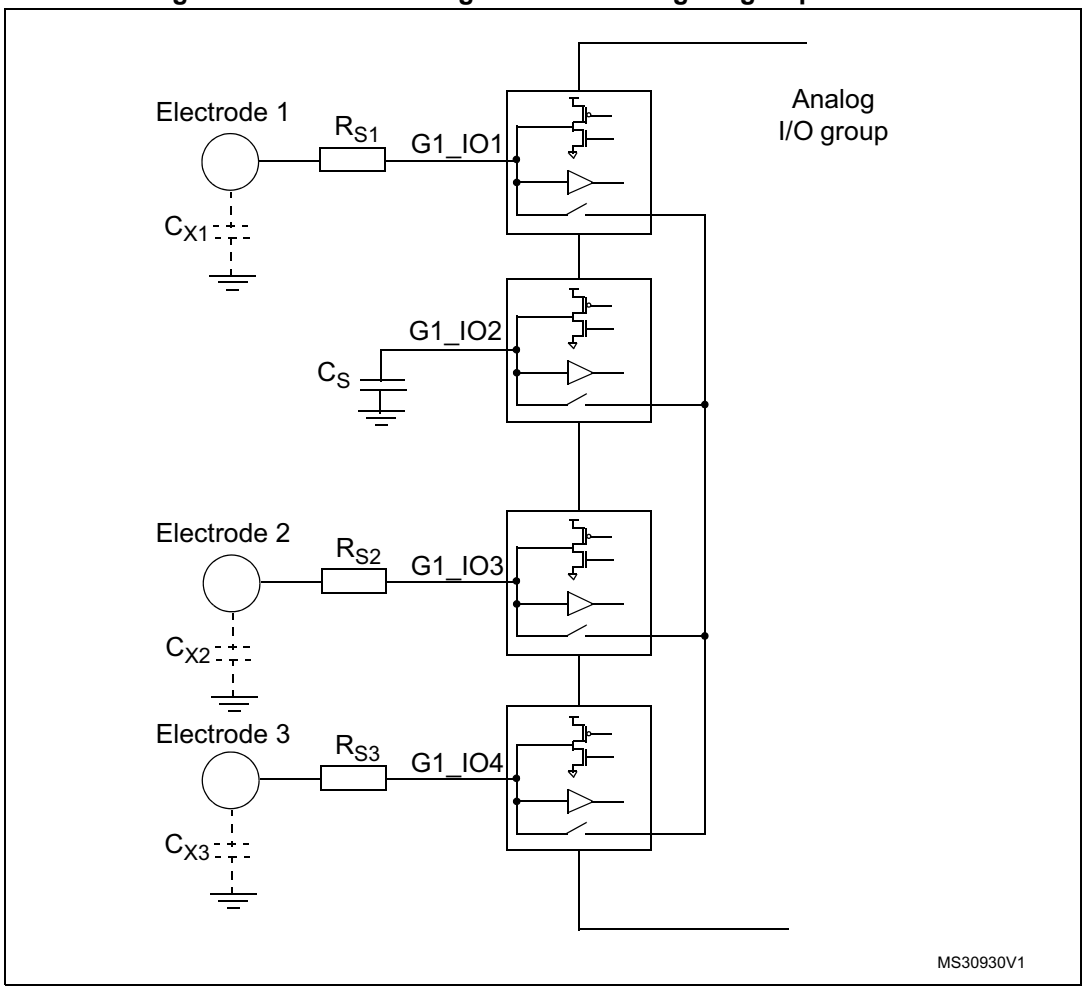

Note: Gx_IOy where x is the analog I/O group number and y the GPIO number within the selected group.

The surface charge transfer acquisition principle consists of charging an electrode capacitance (C_X) and transferring a part of the accumulated charge into a sampling capacitor (C_S). This sequence is repeated until the voltage across C_S reaches a given threshold (V_{IH} in our case). The number of charge transfers required to reach the threshold is a direct representation of the size of the electrode capacitance.

The *Table 169* details the charge transfer acquisition sequence of the capacitive sensing channel 1. States 3 to 7 are repeated until the voltage across C_S reaches the given threshold. The same sequence applies to the acquisition of the other channels. The electrode serial resistor R_S improves the ESD immunity of the solution.

Table 169. Acquisition sequence summary

State	G1_IO1 (channel)	G1_IO2 (sampling)	G1_IO3 (channel)	G1_IO4 (channel)	State description
#1	Input floating with analog switch closed	Output open-drain low with analog switch closed	Input floating with analog switch closed		Discharge all C_X and C_S
#2	Input floating				Dead time
#3	Output push-pull high	Input floating			Charge C_{X1}
#4	Input floating				Dead time
#5	Input floating with analog switch closed		Input floating		Charge transfer from C_{X1} to C_S
#6	Input floating				Dead time
#7	Input floating				Measure C_S voltage

The voltage variation over the time on the sampling capacitor C_S is detailed below:

Figure 185. Sampling capacitor voltage variation

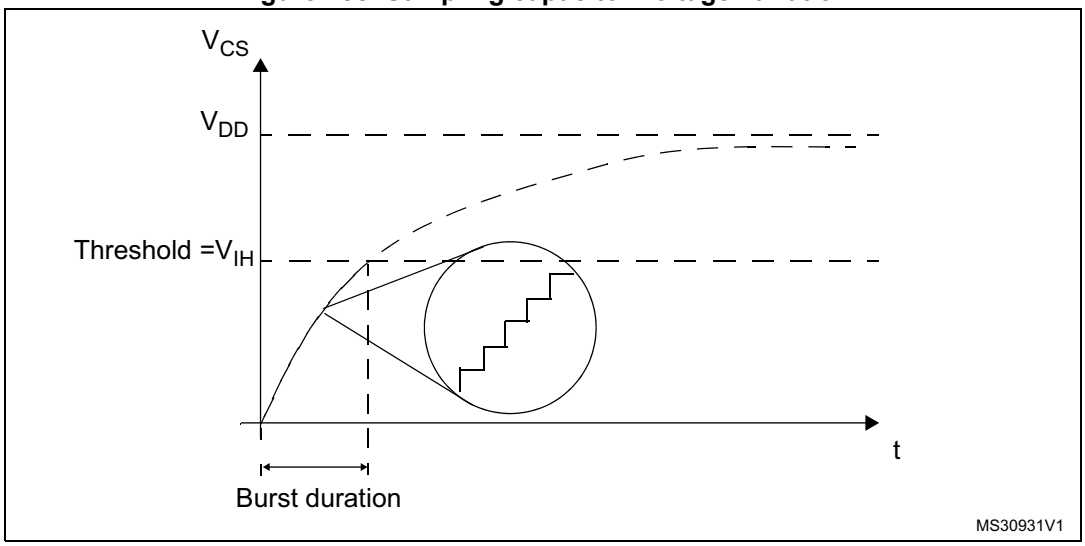

26.3.3 Reset and clocks

The TSC clock source is the AHB clock (HCLK). Two programmable prescalers are used to generate the pulse generator and the spread spectrum internal clocks:

- The pulse generator clock (PGCLK) is defined using the PGPSC[2:0] bits of the TSC_CR register
- The spread spectrum clock (SSCLK) is defined using the SSPSC bit of the TSC_CR register

The Reset and Clock Controller (RCC) provides dedicated bits to enable the touch sensing controller clock and to reset this peripheral. For more information, refer to *Section 6: Reset and clock control (RCC)*.

26.3.4 Charge transfer acquisition sequence

An example of a charge transfer acquisition sequence is detailed in *Figure 186*.

Figure 186. Charge transfer acquisition sequence

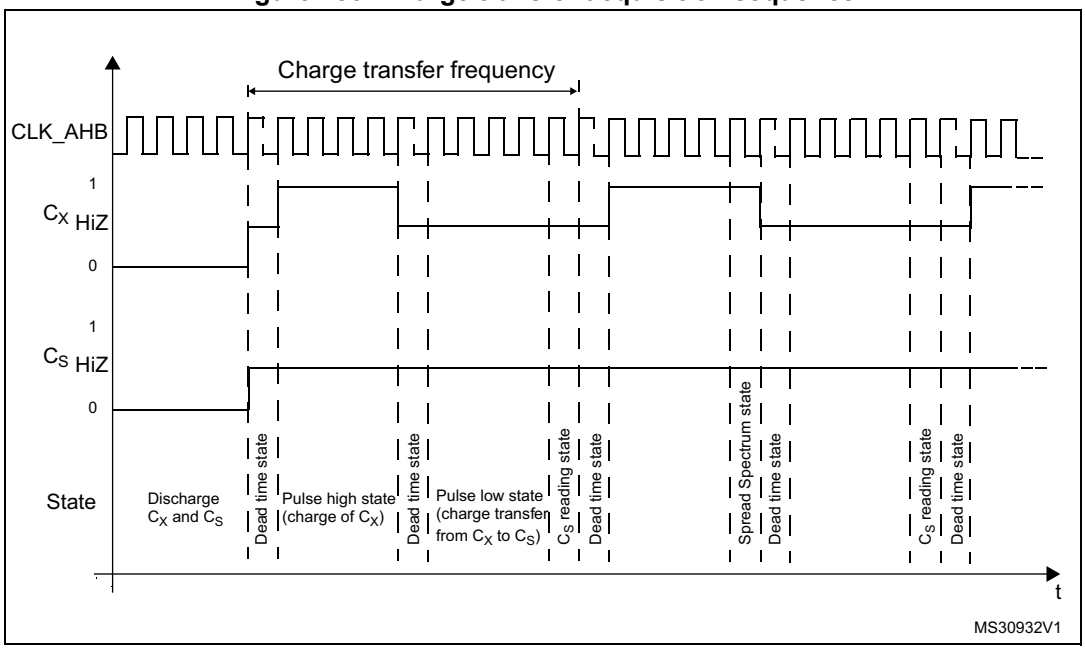

For higher flexibility, the charge transfer frequency is fully configurable. Both the pulse high state (charge of C_X) and the pulse low state (transfer of charge from C_X to C_S) duration can be defined using the CTPH[3:0] and CTPL[3:0] bits in the TSC_CR register. The standard range for the pulse high and low states duration is 500 ns to 2 µs. To ensure a correct measurement of the electrode capacitance, the pulse high state duration must be set to ensure that C_X is always fully charged.

A dead time where both the sampling capacitor I/O and the channel I/O are in input floating state is inserted between the pulse high and low states to ensure an optimum charge transfer acquisition sequence. This state duration is 1 periods of HCLK.

At the end of the pulse high state and if the spread spectrum feature is enabled, a variable number of periods of the SSCLK clock are added.

The reading of the sampling capacitor I/O, to determine if the voltage across C_S has reached the given threshold, is performed at the end of the pulse low state and its duration is one period of HCLK.

Note: The following TSC control register configurations are forbidden:

- *bits PGPSC are set to ‘000’ and bits CTPL are set to ‘0000’*
- *bits PGPSC are set to ‘000’ and bits CTPL are set to ‘0001’*
- *bits PGPSC are set to ‘001’ and bits CTPL are set to ‘0000’*

26.3.5 Spread spectrum feature

The spread spectrum feature allows to generate a variation of the charge transfer frequency. This is done to improve the robustness of the charge transfer acquisition in noisy environments and also to reduce the induced emission. The maximum frequency variation is in the range of 10% to 50% of the nominal charge transfer period. For instance, for a nominal charge transfer frequency of 250 kHz (4 µs), the typical spread spectrum deviation is 10% (400 ns) which leads to a minimum charge transfer frequency of ~227 kHz.

In practice, the spread spectrum consists of adding a variable number of SSCLK periods to the pulse high state using the principle shown below:

Figure 187. Spread spectrum variation principle

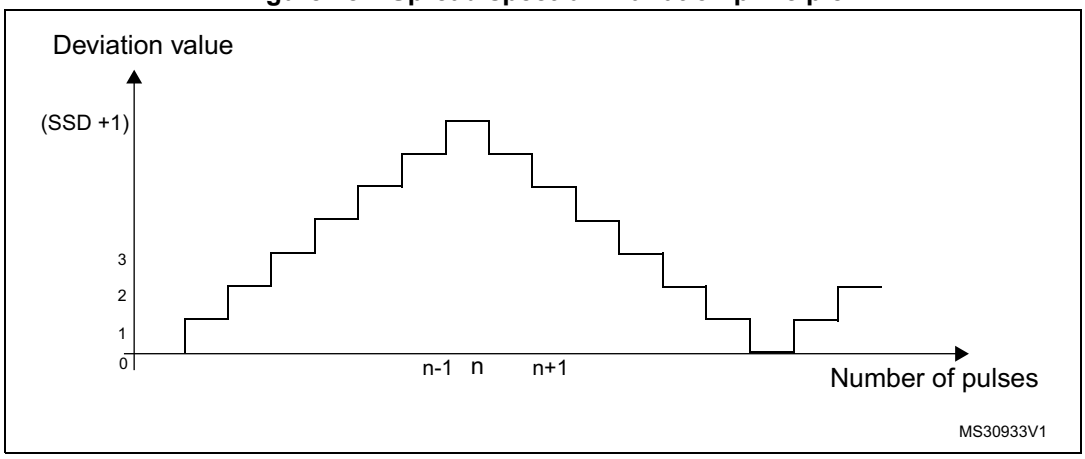

The table below details the maximum frequency deviation with different HCLK settings:

Table 170. Spread spectrum deviation versus AHB clock frequency

f_{HCLK}	Spread spectrum step	Maximum spread spectrum deviation
24 MHz	41.6 ns	10666.6 ns
48 MHz	20.8 ns	5333.3 ns
80 MHz	12.5 ns	3205.1 ns

The spread spectrum feature can be disabled/enabled using the SSE bit in the TSC_CR register. The frequency deviation is also configurable to accommodate the device HCLK clock frequency and the selected charge transfer frequency through the SSPSC and SSD[6:0] bits in the TSC_CR register.

26.3.6 Max count error

The max count error prevents long acquisition times resulting from a faulty capacitive sensing channel. It consists of specifying a maximum count value for the analog I/O group counters. This maximum count value is specified using the MCV[2:0] bits in the TSC_CR register. As soon as an acquisition group counter reaches this maximum value, the ongoing acquisition is stopped and the end of acquisition (EOAF bit) and max count error (MCEF bit) flags are both set. An interrupt can also be generated if the corresponding end of acquisition (EOAIE bit) or/and max count error (MCEIE bit) interrupt enable bits are set.

26.3.7 Sampling capacitor I/O and channel I/O mode selection

To allow the GPIOs to be controlled by the touch sensing controller, the corresponding alternate function must be enabled through the standard GPIO registers and the GPIOxAFR registers.

The GPIOs modes controlled by the TSC are defined using the TSC_IOSCR and TSC_IOCCR register.

When there is no ongoing acquisition, all the I/Os controlled by the touch sensing controller are in default state. While an acquisition is ongoing, only unused I/Os (neither defined as sampling capacitor I/O nor as channel I/O) are in default state. The IODEF bit in the TSC_CR register defines the configuration of the I/Os which are in default state. The table below summarizes the configuration of the I/O depending on its mode.

Table 171. I/O state depending on its mode and IODEF bit value

IODEF bit	Acquisition status	Unused I/O mode	Channel I/O mode	Sampling capacitor I/O mode
0 (output push-pull low)	No	Output push-pull low	Output push-pull low	Output push-pull low
0 (output push-pull low)	Ongoing	Output push-pull low	-	-
1 (input floating)	No	Input floating	Input floating	Input floating
1 (input floating)	Ongoing	Input floating	-	-

Unused I/O mode

An unused I/O corresponds to a GPIO controlled by the TSC peripheral but not defined as an electrode I/O nor as a sampling capacitor I/O.

Sampling capacitor I/O mode

To allow the control of the sampling capacitor I/O by the TSC peripheral, the corresponding GPIO must be first set to alternate output open drain mode and then the corresponding Gx_IOy bit in the TSC_IOSCR register must be set.

Only one sampling capacitor per analog I/O group must be enabled at a time.

Channel I/O mode

To allow the control of the channel I/O by the TSC peripheral, the corresponding GPIO must be first set to alternate output push-pull mode and the corresponding Gx_IOy bit in the TSC_IOCCR register must be set.

For proximity detection where a higher equivalent electrode surface is required or to speed-up the acquisition process, it is possible to enable and simultaneously acquire several channels belonging to the same analog I/O group.

Note: During the acquisition phase and even if the TSC peripheral alternate function is not enabled, as soon as the TSC_IOSCR or TSC_IOCCR bit is set, the corresponding GPIO analog switch is automatically controlled by the touch sensing controller.

26.3.8 Acquisition mode

The touch sensing controller offers two acquisition modes:

- Normal acquisition mode: the acquisition starts as soon as the START bit in the TSC_CR register is set.
- Synchronized acquisition mode: the acquisition is enabled by setting the START bit in the TSC_CR register but only starts upon the detection of a falling edge or a rising edge and high level on the SYNC input pin. This mode is useful for synchronizing the capacitive sensing channels acquisition with an external signal without additional CPU load.

The GxE bits in the TSC_IOGCSR registers specify which analog I/O groups are enabled (corresponding counter is counting). The C_S voltage of a disabled analog I/O group is not monitored and this group does not participate in the triggering of the end of acquisition flag. However, if the disabled analog I/O group contains some channels, they will be pulsed.

When the C_S voltage of an enabled analog I/O group reaches the given threshold, the corresponding GxS bit of the TSC_IOGCSR register is set. When the acquisition of all enabled analog I/O groups is complete (all GxS bits of all enabled analog I/O groups are set), the EOAF flag in the TSC_ISR register is set. An interrupt request is generated if the EOAIE bit in the TSC_IER register is set.

In the case that a max count error is detected, the ongoing acquisition is stopped and both the EOAF and MCEF flags in the TSC_ISR register are set. Interrupt requests can be generated for both events if the corresponding bits (EOAIE and MCEIE bits of the TSCIER register) are set. Note that when the max count error is detected the remaining GxS bits in the enabled analog I/O groups are not set.

To clear the interrupt flags, the corresponding EOAIC and MCEIC bits in the TSC_ICR register must be set.

The analog I/O group counters are cleared when a new acquisition is started. They are updated with the number of charge transfer cycles generated on the corresponding channel(s) upon the completion of the acquisition.

26.3.9 I/O hysteresis and analog switch control

In order to offer a higher flexibility, the touch sensing controller also allows to take the control of the Schmitt trigger hysteresis and analog switch of each Gx_IOy. This control is available whatever the I/O control mode is (controlled by standard GPIO registers or other peripherals) assuming that the touch sensing controller is enabled. This may be useful to perform a different acquisition sequence or for other purposes.

In order to improve the system immunity, the Schmitt trigger hysteresis of the GPIOs controlled by the TSC must be disabled by resetting the corresponding Gx_IOy bit in the TSC_IOHCR register.

26.4 TSC low-power modes

Table 172. Effect of low-power modes on TSC

Mode	Description
Sleep	No effect. Peripheral interrupts cause the device to exit Sleep mode.
Low power run	No effect.
Low power sleep	No effect. Peripheral interrupts cause the device to exit Low-power sleep mode.
Stop 0 / Stop 1	Peripheral registers content is kept.
Stop 2	
Standby	Powered-down. The peripheral must be reinitialized after exiting Standby or Shutdown mode.
Shutdown	

26.5 TSC interrupts

Table 173. Interrupt control bits

Interrupt event	Enable control bit	Event flag	Clear flag bit	Exit the Sleep mode	Exit the Stop mode	Exit the Standby mode
End of acquisition	EOAIE	EOAIF	EOAIC	Yes	No	No
Max count error	MCEIE	MCEIF	MCEIC	Yes	No	No

26.6 TSC registers

Refer to *Section 1.2 on page 69* of the reference manual for a list of abbreviations used in register descriptions.

The peripheral registers can be accessed by words (32-bit).

26.6.1 TSC control register (TSC_CR)

Address offset: 0x00

Reset value: 0x0000 0000

31	30	29	28	27	26	25	24	23	22	21	20	19	18	17	16
CTPH[3:0]				CTPL[3:0]				SSD[6:0]							SSE
rw	rw	rw	rw	rw	rw	rw	rw	rw	rw	rw	rw	rw	rw	rw	rw
15	14	13	12	11	10	9	8	7	6	5	4	3	2	1	0
SSPSC	PGPSC[2:0]			Res.	Res.	Res.	Res.	MCV[2:0]			IODEF	SYNC POL	AM	START	TSCE
rw	rw	rw	rw					rw	rw	rw	rw	rw	rw	rw	rw

Bits 31:28 **CTPH[3:0]**: Charge transfer pulse high

These bits are set and cleared by software. They define the duration of the high state of the charge transfer pulse (charge of C_X).

0000: 1x t_{PGCLK}
0001: 2x t_{PGCLK}
...
1111: 16x t_{PGCLK}

Note: These bits must not be modified when an acquisition is ongoing.

Bits 27:24 **CTPL[3:0]**: Charge transfer pulse low

These bits are set and cleared by software. They define the duration of the low state of the charge transfer pulse (transfer of charge from C_X to C_S).

0000: 1x t_{PGCLK}
0001: 2x t_{PGCLK}
...
1111: 16x t_{PGCLK}

Note: These bits must not be modified when an acquisition is ongoing.

Note: Some configurations are forbidden. Refer to the Section 26.3.4: Charge transfer acquisition sequence for details.

Bits 23:17 **SSD[6:0]**: Spread spectrum deviation

These bits are set and cleared by software. They define the spread spectrum deviation which consists in adding a variable number of periods of the SSCLK clock to the charge transfer pulse high state.

0000000: 1x t_{SSCLK}
0000001: 2x t_{SSCLK}
...
1111111: 128x t_{SSCLK}

Note: These bits must not be modified when an acquisition is ongoing.

Bit 16 **SSE**: Spread spectrum enable

This bit is set and cleared by software to enable/disable the spread spectrum feature.

0: Spread spectrum disabled

1: Spread spectrum enabled

Note: This bit must not be modified when an acquisition is ongoing.

Bit 15 **SSPSC**: Spread spectrum prescaler

This bit is set and cleared by software. It selects the AHB clock divider used to generate the spread spectrum clock (SSCLK).

0: f_{HCLK}

1: f_{HCLK} /2

Note: This bit must not be modified when an acquisition is ongoing.

Bits 14:12 **PGPSC[2:0]**: Pulse generator prescaler

These bits are set and cleared by software.They select the AHB clock divider used to generate the pulse generator clock (PGCLK).

000: f_{HCLK}

001: f_{HCLK} /2

010: f_{HCLK} /4

011: f_{HCLK} /8

100: f_{HCLK} /16

101: f_{HCLK} /32

110: f_{HCLK} /64

111: f_{HCLK} /128

Note: These bits must not be modified when an acquisition is ongoing.

Note: Some configurations are forbidden. Refer to the Section 26.3.4: Charge transfer acquisition sequence for details.

Bits 11:8 Reserved, must be kept at reset value.

Bits 7:5 **MCV[2:0]**: Max count value

These bits are set and cleared by software. They define the maximum number of charge transfer pulses that can be generated before a max count error is generated.

000: 255

001: 511

010: 1023

011: 2047

100: 4095

101: 8191

110: 16383

111: reserved

Note: These bits must not be modified when an acquisition is ongoing.

Bit 4 **IODEF**: I/O Default mode

This bit is set and cleared by software. It defines the configuration of all the TSC I/Os when there is no ongoing acquisition. When there is an ongoing acquisition, it defines the configuration of all unused I/Os (not defined as sampling capacitor I/O or as channel I/O).

0: I/Os are forced to output push-pull low

1: I/Os are in input floating

Note: This bit must not be modified when an acquisition is ongoing.

Bit 3 **SYNCPOL**: Synchronization pin polarity

This bit is set and cleared by software to select the polarity of the synchronization input pin.

0: Falling edge only

1: Rising edge and high level

Bit 2 **AM**: Acquisition mode

This bit is set and cleared by software to select the acquisition mode.

0: Normal acquisition mode (acquisition starts as soon as START bit is set)

1: Synchronized acquisition mode (acquisition starts if START bit is set and when the selected signal is detected on the SYNC input pin)

Note: This bit must not be modified when an acquisition is ongoing.

Bit 1 **START**: Start a new acquisition

This bit is set by software to start a new acquisition. It is cleared by hardware as soon as the acquisition is complete or by software to cancel the ongoing acquisition.

0: Acquisition not started

1: Start a new acquisition

Bit 0 **TSCE**: Touch sensing controller enable

This bit is set and cleared by software to enable/disable the touch sensing controller.

0: Touch sensing controller disabled

1: Touch sensing controller enabled

Note: When the touch sensing controller is disabled, TSC registers settings have no effect.

26.6.2 TSC interrupt enable register (TSC_IER)

Address offset: 0x04

Reset value: 0x0000 0000

31	30	29	28	27	26	25	24	23	22	21	20	19	18	17	16
Res.	Res.	Res.	Res.	Res.	Res.	Res.	Res.	Res.	Res.	Res.	Res.	Res.	Res.	Res.	Res.

15	14	13	12	11	10	9	8	7	6	5	4	3	2	1	0
Res.	Res.	Res.	Res.	Res.	Res.	Res.	Res.	Res.	Res.	Res.	Res.	Res.	Res.	MCEIE	EOAIE
														rw	rw

Bits 31:2 Reserved, must be kept at reset value.

Bit 1 **MCEIE**: Max count error interrupt enable

This bit is set and cleared by software to enable/disable the max count error interrupt.

0: Max count error interrupt disabled

1: Max count error interrupt enabled

Bit 0 **EOAIE**: End of acquisition interrupt enable

This bit is set and cleared by software to enable/disable the end of acquisition interrupt.

0: End of acquisition interrupt disabled

1: End of acquisition interrupt enabled

26.6.3 TSC interrupt clear register (TSC_ICR)

Address offset: 0x08

Reset value: 0x0000 0000

31	30	29	28	27	26	25	24	23	22	21	20	19	18	17	16
Res.	Res.	Res.	Res.	Res.	Res.	Res.	Res.	Res.	Res.	Res.	Res.	Res.	Res.	Res.	Res.

15	14	13	12	11	10	9	8	7	6	5	4	3	2	1	0
Res.	Res.	Res.	Res.	Res.	Res.	Res.	Res.	Res.	Res.	Res.	Res.	Res.	Res.	MCEIC	EOAIC
														rw	rw

Bits 31:2 Reserved, must be kept at reset value.

Bit 1 **MCEIC**: Max count error interrupt clear

This bit is set by software to clear the max count error flag and it is cleared by hardware when the flag is reset. Writing a ‘0’ has no effect.

0: No effect

1: Clears the corresponding MCEF of the TSC_ISR register

Bit 0 **EOAIC**: End of acquisition interrupt clear

This bit is set by software to clear the end of acquisition flag and it is cleared by hardware when the flag is reset. Writing a ‘0’ has no effect.

0: No effect

1: Clears the corresponding EOAF of the TSC_ISR register

26.6.4 TSC interrupt status register (TSC_ISR)

Address offset: 0x0C

Reset value: 0x0000 0000

31	30	29	28	27	26	25	24	23	22	21	20	19	18	17	16
Res.	Res.	Res.	Res.	Res.	Res.	Res.	Res.	Res.	Res.	Res.	Res.	Res.	Res.	Res.	Res.

15	14	13	12	11	10	9	8	7	6	5	4	3	2	1	0
Res.	Res.	Res.	Res.	Res.	Res.	Res.	Res.	Res.	Res.	Res.	Res.	Res.	Res.	MCEF	EOAF
														r	r

Bits 31:2 Reserved, must be kept at reset value.

Bit 1 **MCEF**: Max count error flag

This bit is set by hardware as soon as an analog I/O group counter reaches the max count value specified. It is cleared by software writing 1 to the bit MCEIC of the TSC_ICR register.

0: No max count error (MCE) detected

1: Max count error (MCE) detected

Bit 0 **EOAF**: End of acquisition flag

This bit is set by hardware when the acquisition of all enabled group is complete (all GxS bits of all enabled analog I/O groups are set or when a max count error is detected). It is cleared by software writing 1 to the bit EOAIC of the TSC_ICR register.

0: Acquisition is ongoing or not started

1: Acquisition is complete

26.6.5 TSC I/O hysteresis control register (TSC_IOHCR)

Address offset: 0x10

Reset value: 0xFFFF FFFF

31	30	29	28	27	26	25	24	23	22	21	20	19	18	17	16
G8_IO4	G8_IO3	G8_IO2	G8_IO1	G7_IO4	G7_IO3	G7_IO2	G7_IO1	G6_IO4	G6_IO3	G6_IO2	G6_IO1	G5_IO4	G5_IO3	G5_IO2	G5_IO1
rw	rw	rw	rw	rw	rw	rw	rw	rw	rw	rw	rw	rw	rw	rw	rw

15	14	13	12	11	10	9	8	7	6	5	4	3	2	1	0
G4_IO4	G4_IO3	G4_IO2	G4_IO1	G3_IO4	G3_IO3	G3_IO2	G3_IO1	G2_IO4	G2_IO3	G2_IO2	G2_IO1	G1_IO4	G1_IO3	G1_IO2	G1_IO1
rw	rw	rw	rw	rw	rw	rw	rw	rw	rw	rw	rw	rw	rw	rw	rw

Bits 31:0 **Gx_IOy**: Gx_IOy Schmitt trigger hysteresis mode

These bits are set and cleared by software to enable/disable the Gx_IOy Schmitt trigger hysteresis.

0: Gx_IOy Schmitt trigger hysteresis disabled

1: Gx_IOy Schmitt trigger hysteresis enabled

Note: These bits control the I/O Schmitt trigger hysteresis whatever the I/O control mode is (even if controlled by standard GPIO registers).

26.6.6 TSC I/O analog switch control register (TSC_IOASCR)

Address offset: 0x18

Reset value: 0x0000 0000

31	30	29	28	27	26	25	24	23	22	21	20	19	18	17	16
G8_IO4	G8_IO3	G8_IO2	G8_IO1	G7_IO4	G7_IO3	G7_IO2	G7_IO1	G6_IO4	G6_IO3	G6_IO2	G6_IO1	G5_IO4	G5_IO3	G5_IO2	G5_IO1
rw	rw	rw	rw	rw	rw	rw	rw	rw	rw	rw	rw	rw	rw	rw	rw
15	14	13	12	11	10	9	8	7	6	5	4	3	2	1	0
G4_IO4	G4_IO3	G4_IO2	G4_IO1	G3_IO4	G3_IO3	G3_IO2	G3_IO1	G2_IO4	G2_IO3	G2_IO2	G2_IO1	G1_IO4	G1_IO3	G1_IO2	G1_IO1
rw	rw	rw	rw	rw	rw	rw	rw	rw	rw	rw	rw	rw	rw	rw	rw

Bits 31:0 **Gx_IOy**: Gx_IOy analog switch enable

These bits are set and cleared by software to enable/disable the Gx_IOy analog switch.

0: Gx_IOy analog switch disabled (opened)

1: Gx_IOy analog switch enabled (closed)

Note: These bits control the I/O analog switch whatever the I/O control mode is (even if controlled by standard GPIO registers).

26.6.7 TSC I/O sampling control register (TSC_IOSCR)

Address offset: 0x20

Reset value: 0x0000 0000

31	30	29	28	27	26	25	24	23	22	21	20	19	18	17	16
G8_IO4	G8_IO3	G8_IO2	G8_IO1	G7_IO4	G7_IO3	G7_IO2	G7_IO1	G6_IO4	G6_IO3	G6_IO2	G6_IO1	G5_IO4	G5_IO3	G5_IO2	G5_IO1
rw	rw	rw	rw	rw	rw	rw	rw	rw	rw	rw	rw	rw	rw	rw	rw
15	14	13	12	11	10	9	8	7	6	5	4	3	2	1	0
G4_IO4	G4_IO3	G4_IO2	G4_IO1	G3_IO4	G3_IO3	G3_IO2	G3_IO1	G2_IO4	G2_IO3	G2_IO2	G2_IO1	G1_IO4	G1_IO3	G1_IO2	G1_IO1
rw	rw	rw	rw	rw	rw	rw	rw	rw	rw	rw	rw	rw	rw	rw	rw

Bits 31:0 **Gx_IOy**: Gx_IOy sampling mode

These bits are set and cleared by software to configure the Gx_IOy as a sampling capacitor I/O. Only one I/O per analog I/O group must be defined as sampling capacitor.

0: Gx_IOy unused

1: Gx_IOy used as sampling capacitor

Note: These bits must not be modified when an acquisition is ongoing.

During the acquisition phase and even if the TSC peripheral alternate function is not enabled, as soon as the TSC_IOSCR bit is set, the corresponding GPIO analog switch is automatically controlled by the touch sensing controller.

26.6.8 TSC I/O channel control register (TSC_IOCCR)

Address offset: 0x28

Reset value: 0x0000 0000

31	30	29	28	27	26	25	24	23	22	21	20	19	18	17	16
G8_IO4	G8_IO3	G8_IO2	G8_IO1	G7_IO4	G7_IO3	G7_IO2	G7_IO1	G6_IO4	G6_IO3	G6_IO2	G6_IO1	G5_IO4	G5_IO3	G5_IO2	G5_IO1
rw	rw	rw	rw	rw	rw	rw	rw	rw	rw	rw	rw	rw	rw	rw	rw
15	14	13	12	11	10	9	8	7	6	5	4	3	2	1	0
G4_IO4	G4_IO3	G4_IO2	G4_IO1	G3_IO4	G3_IO3	G3_IO2	G3_IO1	G2_IO4	G2_IO3	G2_IO2	G2_IO1	G1_IO4	G1_IO3	G1_IO2	G1_IO1
rw	rw	rw	rw	rw	rw	rw	rw	rw	rw	rw	rw	rw	rw	rw	rw

Bits 31:0 **Gx_IOy**: Gx_IOy channel mode

These bits are set and cleared by software to configure the Gx_IOy as a channel I/O.

0: Gx_IOy unused

1: Gx_IOy used as channel

Note: These bits must not be modified when an acquisition is ongoing.

During the acquisition phase and even if the TSC peripheral alternate function is not enabled, as soon as the TSC_IOCCR bit is set, the corresponding GPIO analog switch is automatically controlled by the touch sensing controller.

26.6.9 TSC I/O group control status register (TSC_IOGCSR)

Address offset: 0x30

Reset value: 0x0000 0000

31	30	29	28	27	26	25	24	23	22	21	20	19	18	17	16
Res.	Res.	Res.	Res.	Res.	Res.	Res.	Res.	G8S	G7S	G6S	G5S	G4S	G3S	G2S	G1S
								r	r	r	r	r	r	r	r
15	14	13	12	11	10	9	8	7	6	5	4	3	2	1	0
Res.	Res.	Res.	Res.	Res.	Res.	Res.	Res.	G8E	G7E	G6E	G5E	G4E	G3E	G2E	G1E
								rw	rw	rw	rw	rw	rw	rw	rw

Bits 31:24 Reserved, must be kept at reset value.

Bits 23:16 **GxS**: Analog I/O group x status

These bits are set by hardware when the acquisition on the corresponding enabled analog I/O group x is complete. They are cleared by hardware when a new acquisition is started.

0: Acquisition on analog I/O group x is ongoing or not started

1: Acquisition on analog I/O group x is complete

Note: When a max count error is detected the remaining GxS bits of the enabled analog I/O groups are not set.

Bits 15:8 Reserved, must be kept at reset value.

Bits 7:0 **GxE**: Analog I/O group x enable

These bits are set and cleared by software to enable/disable the acquisition (counter is counting) on the corresponding analog I/O group x.

0: Acquisition on analog I/O group x disabled

1: Acquisition on analog I/O group x enabled

26.6.10 TSC I/O group x counter register (TSC_IOGxCR)

x represents the analog I/O group number.

Address offset: 0x30 + 0x04 * x, (x = 1..8)

Reset value: 0x0000 0000

31	30	29	28	27	26	25	24	23	22	21	20	19	18	17	16
Res.	Res.	Res.	Res.	Res.	Res.	Res.	Res.	Res.	Res.	Res.	Res.	Res.	Res.	Res.	Res.

15	14	13	12	11	10	9	8	7	6	5	4	3	2	1	0
Res.	Res.	CNT[13:0]													
		r	r	r	r	r	r	r	r	r	r	r	r	r	r

Bits 31:14 Reserved, must be kept at reset value.

Bits 13:0 **CNT[13:0]**: Counter value

These bits represent the number of charge transfer cycles generated on the analog I/O group x to complete its acquisition (voltage across C_S has reached the threshold).

26.6.11 TSC register map

Table 174. TSC register map and reset values

Offset	Register	31	30	29	28	27	26	25	24	23	22	21	20	19	18	17	16	15	14	13	12	11	10	9	8	7	6	5	4	3	2	1	0
0x0000	**TSC_CR**	CTPH[3:0]				CTPL[3:0]				SSD[6:0]							SSE	SSPSC	PGPSC[2:0]			Res.	Res.	Res.	Res.	MCV [2:0]			IODEF	SYNCPOL	AM	START	TSCE
	Reset value	0	0	0	0	0	0	0	0	0	0	0	0	0	0	0	0	0	0	0	0					0	0	0	0	0	0	0	0
0x0004	**TSC_IER**	Res.	Res.	Res.	Res.	Res.	Res.	Res.	Res.	Res.	Res.	Res.	Res.	Res.	Res.	Res.	Res.	Res.	Res.	Res.	Res.	Res.	Res.	Res.	Res.	Res.	Res.	Res.	Res.	Res.	Res.	MCEIE	EOAIE
	Reset value																															0	0
0x0008	**TSC_ICR**	Res.	Res.	Res.	Res.	Res.	Res.	Res.	Res.	Res.	Res.	Res.	Res.	Res.	Res.	Res.	Res.	Res.	Res.	Res.	Res.	Res.	Res.	Res.	Res.	Res.	Res.	Res.	Res.	Res.	Res.	MCEIC	EOAIC
	Reset value																															0	0
0x000C	**TSC_ISR**	Res.	Res.	Res.	Res.	Res.	Res.	Res.	Res.	Res.	Res.	Res.	Res.	Res.	Res.	Res.	Res.	Res.	Res.	Res.	Res.	Res.	Res.	Res.	Res.	Res.	Res.	Res.	Res.	Res.	Res.	MCEF	EOAF
	Reset value																															0	0
0x0010	**TSC_IOHCR**	G8_IO4	G8_IO3	G8_IO2	G8_IO1	G7_IO4	G7_IO3	G7_IO2	G7_IO1	G6_IO4	G6_IO3	G6_IO2	G6_IO1	G5_IO4	G5_IO3	G5_IO2	G5_IO1	G4_IO4	G4_IO3	G4_IO2	G4_IO1	G3_IO4	G3_IO3	G3_IO2	G3_IO1	G2_IO4	G2_IO3	G2_IO2	G2_IO1	G1_IO4	G1_IO3	G1_IO2	G1_IO1
	Reset value	1	1	1	1	1	1	1	1	1	1	1	1	1	1	1	1	1	1	1	1	1	1	1	1	1	1	1	1	1	1	1	1
0x0014	Reserved																																
0x0018	**TSC_IOASCR**	G8_IO4	G8_IO3	G8_IO2	G8_IO1	G7_IO4	G7_IO3	G7_IO2	G7_IO1	G6_IO4	G6_IO3	G6_IO2	G6_IO1	G5_IO4	G5_IO3	G5_IO2	G5_IO1	G4_IO4	G4_IO3	G4_IO2	G4_IO1	G3_IO4	G3_IO3	G3_IO2	G3_IO1	G2_IO4	G2_IO3	G2_IO2	G2_IO1	G1_IO4	G1_IO3	G1_IO2	G1_IO1
	Reset value	0	0	0	0	0	0	0	0	0	0	0	0	0	0	0	0	0	0	0	0	0	0	0	0	0	0	0	0	0	0	0	0
0x001C	Reserved																																
0x0020	**TSC_IOSCR**	G8_IO4	G8_IO3	G8_IO2	G8_IO1	G7_IO4	G7_IO3	G7_IO2	G7_IO1	G6_IO4	G6_IO3	G6_IO2	G6_IO1	G5_IO4	G5_IO3	G5_IO2	G5_IO1	G4_IO4	G4_IO3	G4_IO2	G4_IO1	G3_IO4	G3_IO3	G3_IO2	G3_IO1	G2_IO4	G2_IO3	G2_IO2	G2_IO1	G1_IO4	G1_IO3	G1_IO2	G1_IO1
	Reset value	0	0	0	0	0	0	0	0	0	0	0	0	0	0	0	0	0	0	0	0	0	0	0	0	0	0	0	0	0	0	0	0
0x0024	Reserved																																
0x0028	**TSC_IOCCR**	G8_IO4	G8_IO3	G8_IO2	G8_IO1	G7_IO4	G7_IO3	G7_IO2	G7_IO1	G6_IO4	G6_IO3	G6_IO2	G6_IO1	G5_IO4	G5_IO3	G5_IO2	G5_IO1	G4_IO4	G4_IO3	G4_IO2	G4_IO1	G3_IO4	G3_IO3	G3_IO2	G3_IO1	G2_IO4	G2_IO3	G2_IO2	G2_IO1	G1_IO4	G1_IO3	G1_IO2	G1_IO1
	Reset value	0	0	0	0	0	0	0	0	0	0	0	0	0	0	0	0	0	0	0	0	0	0	0	0	0	0	0	0	0	0	0	0
0x002C	Reserved																																
0x0030	**TSC_IOGCSR**	Res.	Res.	Res.	Res.	Res.	Res.	Res.	Res.	G8S	G7S	G6S	G5S	G4S	G3S	G2S	G1S	Res.	Res.	Res.	Res.	Res.	Res.	Res.	Res.	G8E	G7E	G6E	G5E	G4E	G3E	G2E	G1E
	Reset value									0	0	0	0	0	0	0	0									0	0	0	0	0	0	0	0
0x0034	**TSC_IOG1CR**	Res.	Res.	Res.	Res.	Res.	Res.	Res.	Res.	Res.	Res.	Res.	Res.	Res.	Res.	Res.	Res.	Res.	Res.	CNT[13:0]													
	Reset value																			0	0	0	0	0	0	0	0	0	0	0	0	0	0
0x0038	**TSC_IOG2CR**	Res.	Res.	Res.	Res.	Res.	Res.	Res.	Res.	Res.	Res.	Res.	Res.	Res.	Res.	Res.	Res.	Res.	Res.	CNT[13:0]													
	Reset value																			0	0	0	0	0	0	0	0	0	0	0	0	0	0

Table 174. TSC register map and reset values (continued)

Offset	Register	31	30	29	28	27	26	25	24	23	22	21	20	19	18	17	16	15	14	13	12	11	10	9	8	7	6	5	4	3	2	1	0
0x003C	**TSC_IOG3CR**	Res.	Res.	Res.	Res.	Res.	Res.	Res.	Res.	Res.	Res.	Res.	Res.	Res.	Res.	Res.	Res.	Res.	Res.	CNT[13:0]													
	Reset value																			0	0	0	0	0	0	0	0	0	0	0	0	0	0
0x0040	**TSC_IOG4CR**	Res.	Res.	Res.	Res.	Res.	Res.	Res.	Res.	Res.	Res.	Res.	Res.	Res.	Res.	Res.	Res.	Res.	Res.	CNT[13:0]													
	Reset value																			0	0	0	0	0	0	0	0	0	0	0	0	0	0
0x0044	**TSC_IOG5CR**	Res.	Res.	Res.	Res.	Res.	Res.	Res.	Res.	Res.	Res.	Res.	Res.	Res.	Res.	Res.	Res.	Res.	Res.	CNT[13:0]													
	Reset value																			0	0	0	0	0	0	0	0	0	0	0	0	0	0
0x0048	**TSC_IOG6CR**	Res.	Res.	Res.	Res.	Res.	Res.	Res.	Res.	Res.	Res.	Res.	Res.	Res.	Res.	Res.	Res.	Res.	Res.	CNT[13:0]													
	Reset value																			0	0	0	0	0	0	0	0	0	0	0	0	0	0
0x004C	**TSC_IOG7CR**	Res.	Res.	Res.	Res.	Res.	Res.	Res.	Res.	Res.	Res.	Res.	Res.	Res.	Res.	Res.	Res.	Res.	Res.	CNT[13:0]													
	Reset value																			0	0	0	0	0	0	0	0	0	0	0	0	0	0
0x0050	**TSC_IOG8CR**	Res.	Res.	Res.	Res.	Res.	Res.	Res.	Res.	Res.	Res.	Res.	Res.	Res.	Res.	Res.	Res.	Res.	Res.	CNT[13:0]													
	Reset value																			0	0	0	0	0	0	0	0	0	0	0	0	0	0

Refer to *Section 2.2 on page 75* for the register boundary addresses.

27 True random number generator (RNG)

27.1 Introduction

The RNG is a true random number generator that continuously provides 32-bit entropy samples, based on an analog noise source. It can be used by the application as a live entropy source to build a NIST compliant Deterministic Random Bit Generator (DRBG).

The RNG true random number generator has been tested using NIST statistical test suite SP800-22 rev1a (April 2010).

27.2 RNG main features

- The RNG delivers 32-bit true random numbers, produced by an analog entropy source post-processed with linear-feedback shift registers (LFSR).
- It produces one 32-bit random samples every 42 RNG clock cycles(dedicated clock).
- It allows embedded continuous basic health tests with associated error management
  - Includes too low sampling clock detection and repetition count tests.
- It can be disabled to reduce power consumption.
- It has an AMBA AHB slave peripheral, accessible through 32-bit word single accesses only (else an AHB bus error is generated). Warning! any write not equal to 32 bits might corrupt the register content.

27.3 RNG functional description

27.3.1 RNG block diagram

Figure 188 shows the RNG block diagram.

Figure 188. RNG block diagram

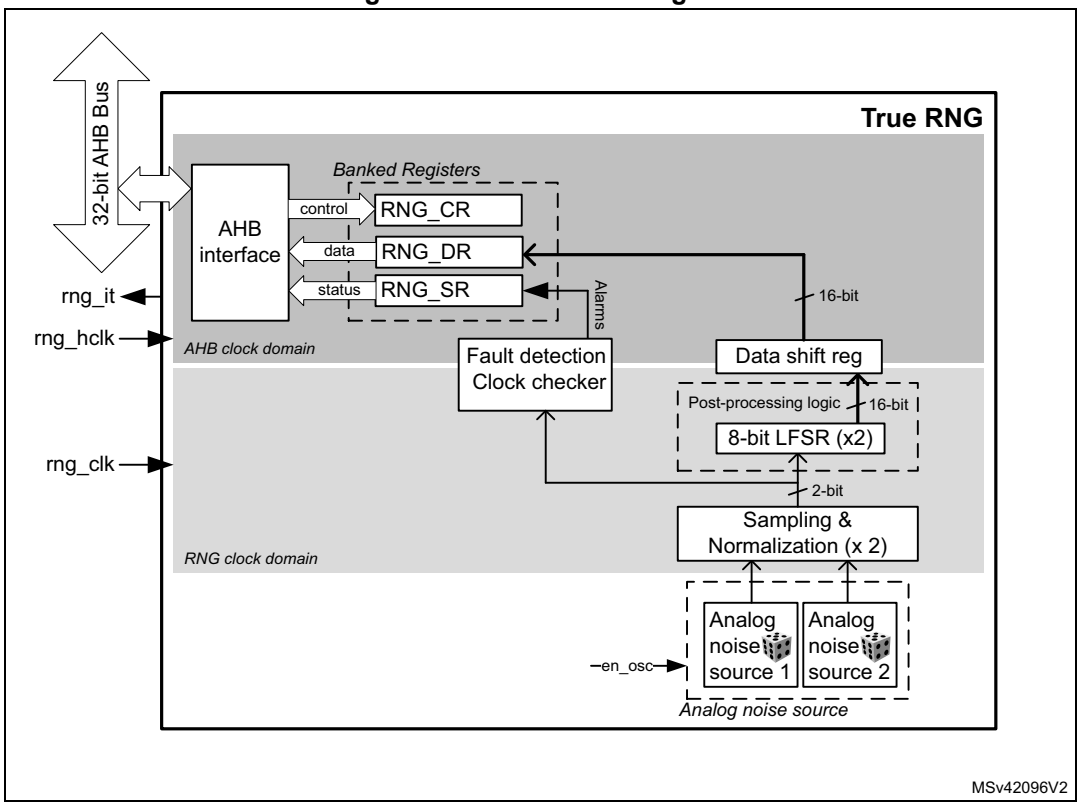

27.3.2 RNG internal signals

Table 175 describes a list of useful-to-know internal signals available at the RNG level, not at the STM32 product level (on pads).

Table 175. RNG internal input/output signals

Signal name	Signal type	Description
rng_it	Digital output	RNG global interrupt request
rng_hclk	Digital input	AHB clock
rng_clk	Digital input	RNG dedicated clock, asynchronous to rng_hclk

27.3.3 Random number generation

The true random number generator (RNG) delivers truly random data through its AHB interface at deterministic intervals. The RNG implements the entropy source model pictured on *Figure 189*, and provides three main functions to the application:

- Collects the bitstring output of the entropy source box
- Obtains samples of the noise source for validation purpose
- Collects error messages from continuous health tests

Figure 189. Entropy source model

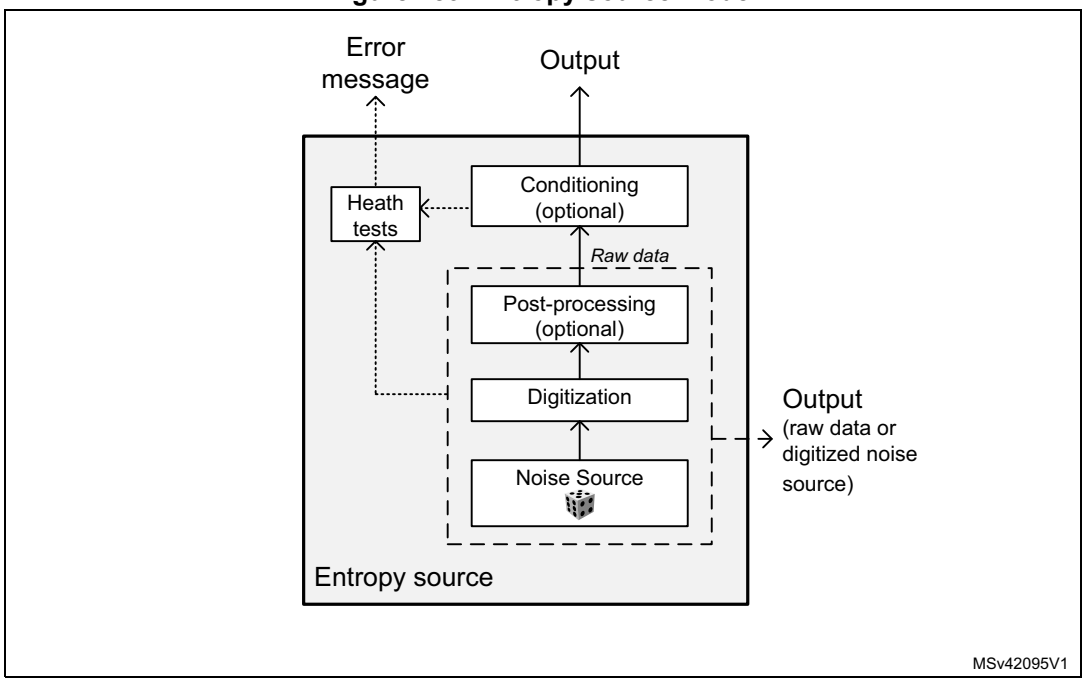

The main components of the RNG are:

- A source of physical randomness (analog noise source)
- A digitization stage for this analog noise source
- A stage delivering post-processed noise source (raw data)
- An output buffer for the raw data. If further cryptographic conditioning is required by the application it will need to be performed by software.
- An optional output for the digitized noise source (unbuffered, on digital pads)
- Basic health tests on the digitized noise source

All those components are detailed below.

Noise source

The noise source is the component that contains the non-deterministic, entropy-providing activity that is ultimately responsible for the uncertainty associated with the bitstring output by the entropy source. It is composed of:

- Two analog noise sources, each based on three XORed free-running ring oscillator outputs. It is possible to disable those analog oscillators to save power, as described in *Section 27.3.8: RNG low-power usage*.
- A sampling stage of these outputs clocked by a dedicated clock input (**rng_clk**), delivering a 2-bit raw data output.

This noise source sampling is independent to the AHB interface clock frequency (**rng_hclk**).

Note: In Section 27.6: RNG entropy source validation recommended RNG clock frequencies are given.

Post processing

The sample values obtained from a true random noise source consist of 2-bit bitstrings. Because this noise source output is biased, the RNG implements a post-processing component that reduces that bias to a tolerable level.

The RNG post-processing consists of two stages, applied to each noise source bits:

- The RNG takes half of the bits from the sampled noise source, and half of the bits from inverted sampled noise source. Thus, if the source generates more ‘1’ than ‘0’ (or the opposite), it is filtered
- A linear feedback shift register (LFSR) performs a whitening process, producing 8-bit strings.

This component is clocked by the RNG clock.

The times required between two random number generations, and between the RNG initialization and availability of first sample are described in *Section 27.5: RNG processing time*.

Output buffer

The RNG_DR data output register can store up to two 16-bit words which have been output from the post-processing component (LFSR). In order to read back 32-bit random samples it is required to wait 42 RNG clock cycles.

Whenever a random number is available through the RNG_DR register the DRDY flag transitions from “0” to “1”. This flag remains high until output buffer becomes empty after reading one word from the RNG_DR register.

Note: When interrupts are enabled an interrupt is generated when this data ready flag transitions from “0” to “1”. Interrupt is then cleared automatically by the RNG as explained above.

Health checks

This component ensures that the entire entropy source (with its noise source) starts then operates as expected, obtaining assurance that failures are caught quickly and with a high probability and reliability.

The RNG implements the following health check features.

1. the Continuous health tests, running indefinitely on the output of the noise source
   - Repetition count test, flagging an error when:
   - a) One of the noise source has provided more than 64 consecutive bits at a constant value (“0” or “1”)
   - b) One of the noise sources has delivered more than 32 consecutive occurrence of two bits patterns (“01” or “10”)
2. Vendor specific continuous test
   - Real-time “too slow” sampling clock detector, flagging an error when one RNG clock cycle is smaller than AHB clock cycle divided by 16.

The CECS and SECS status bits in the RNG_SR register indicate when an error condition is detected, as detailed in *Section 27.3.7: Error management*.

Note: An interrupt can be generated when an error is detected.

27.3.4 RNG initialization

When a hardware reset occurs the following chain of events occurs:

1. The analog noise source is enabled, and logic starts sampling the analog output after four RNG clock cycles, filling LFSR shift register and associated 16-bit post-processing shift register.
2. The output buffer is refilled automatically according to the RNG usage.

The associated initialization time can be found in *Section 27.5: RNG processing time*.

27.3.5 RNG operation

Normal operations

To run the RNG using interrupts the following steps are recommended:

1. Enable the interrupts by setting the IE bit in the RNG_CR register. At the same time enable the RNG by setting the bit RNGEN=1.
2. An interrupt is now generated when a random number is ready or when an error occurs. Therefore at each interrupt, check that:
   - No error occurred. The SEIS and CEIS bits should be set to 0 in the RNG_SR register.
   - A random number is ready. The DRDY bit must be set to 1 in the RNG_SR register.
   - If above two conditions are true the content of the RNG_DR register can be read.

To run the RNG in polling mode following steps are recommended:

1. Enable the random number generation by setting the RNGEN bit to “1” in the RNG_CR register.
2. Read the RNG_SR register and check that:
   – No error occurred (the SEIS and CEIS bits should be set to 0)
   – A random number is ready (the DRDY bit should be set to 1)
3. If above conditions are true read the content of the RNG_DR register.

Note: When data is not ready (DRDY=”0”) RNG_DR returns zero.
It is recommended to always verify that RNG_DR is different from zero. Because when it is the case a seed error occurred between RNG_SR polling and RND_DR output reading (rare event).

Low-power operations

If the power consumption is a concern to the application, low-power strategies can be used, as described in *Section 27.3.8: RNG low-power usage*.

Software post-processing

If a NIST approved DRBG with 128 bits of security strength is required an approved random generator software must be built around the RNG true random number generator.

27.3.6 RNG clocking

The RNG runs on two different clocks: the AHB bus clock and a dedicated RNG clock.

The AHB clock is used to clock the AHB banked registers and the post-processing component. The RNG clock is used for noise source sampling. Recommended clock configurations are detailed in *Section 27.6: RNG entropy source validation*.

*Note: When the CED bit in the RNG_CR register is set to “0”, the RNG clock frequency **should be higher** than AHB clock frequency divided by 16, otherwise the clock checker always flags a clock error (CECS=1 in the RNG_SR register).*

See *Section 27.3.1: RNG block diagram* for details (AHB and RNG clock domains).

27.3.7 Error management

In parallel to random number generation an health check block verifies the correct noise source behavior and the frequency of the RNG source clock as detailed in this section. Associated error state is also described.

Clock error detection

When the clock error detection is enabled (CED = 0) and if the RNG clock frequency is too low, the RNG sets to “1” both the **CEIS** and **CECS** bits to indicate that a clock error occurred. In this case, the application should check that the RNG clock is configured correctly (see *Section 27.3.6: RNG clocking*) and then it must clear the CEIS bit interrupt flag. The CECS bit is automatically cleared when clocking condition is normal.

Note: The clock error has no impact on generated random numbers, i.e. application can still read RNG_DR register.

CEIS is set only when CECS is set to “1” by RNG.

Noise source error detection

When a noise source (or seed) error occurs, the RNG stops generating random numbers and sets to “1” both **SEIS** and **SECS** bits to indicate that a seed error occurred. If a value is available in the RNG_DR register, it must not be used as it may not have enough entropy.

In order to fully recover from a seed error application must clear the SEIS bit by writing it to “0”, then clear and set the RNGEN bit to reinitialize and restart the RNG.

27.3.8 RNG low-power usage

If power consumption is a concern, the RNG can be disabled as soon as the DRDY bit is set to “1” by setting the RNGEN bit to “0” in the RNG_CR register. The 32-bit random value stored in the RNG_DR register will be still be available. If a new random is needed the application will need to re-enable the RNG and wait for 42+4 RNG clock cycles.

When disabling the RNG the user deactivates all the analog seed generators, whose power consumption is given in the datasheet electrical characteristics section.

27.4 RNG interrupts

In the RNG an interrupt can be produced on the following events:

- Data ready flag
- Seed error, see *Section 27.3.7: Error management*
- Clock error, see *Section 27.3.7: Error management*

Dedicated interrupt enable control bits are available as shown in *Table 176*.

Table 176. RNG interrupt requests

Interrupt acronym	Interrupt event	Event flag	Enable control bit	Interrupt clear method
RNG	Data ready flag	DRDY	IE	None (automatic)
	Seed error flag	SEIS	IE	Write 0 to SEIS
	Clock error flag	CEIS	IE	Write 0 to CEIS

The user can enable or disable the above interrupt sources individually by changing the mask bits or the general interrupt control bit IE in the RNG_CR register. The status of the individual interrupt sources can be read from the RNG_SR register.

Note: Interrupts are generated only when RNG is enabled.

27.5 RNG processing time

The RNG can produce one 32-bit random numbers every 42 RNG clock cycles.

After enabling or re-enabling the RNG using the RNGEN bit it takes 46 RNG clock cycles before random data are available.

27.6 RNG entropy source validation

27.6.1 Introduction

In order to assess the amount of entropy available from the RNG, STMicroelectronics has tested the peripheral using NIST SP800-22 rev1a statistical tests.

For more information on running this NIST statistical test suite, refer to *STM32 microcontrollers random number generation validation using NIST statistical test suite* application note (AN4230), available on STMicroelectronics website.

27.6.2 Validation conditions

STMicroelectronics has tested the RNG true random number generator in the following conditions:

- RNG clock rng_clk= 48 MHz (CED bit = ’0’ in RNG_CR register) and rng_clk = 400 kHz (CED bit = ‘1’ in RNG_CR register).

27.7 RNG registers

The RNG is associated with a control register, a data register and a status register.

27.7.1 RNG control register (RNG_CR)

Address offset: 0x000

Reset value: 0x0000 0000

31	30	29	28	27	26	25	24	23	22	21	20	19	18	17	16
Res.	Res.	Res.	Res.	Res.	Res.	Res.	Res.	Res.	Res.	Res.	Res.	Res.	Res.	Res.	Res.

15	14	13	12	11	10	9	8	7	6	5	4	3	2	1	0
Res.	Res.	Res.	Res.	Res.	Res.	Res.	Res.	Res.	Res.	CED	Res.	IE	RNGEN	Res.	Res.
										rw		rw	rw		

Bits 31:6 Reserved, must be kept at reset value.

Bit 5 **CED:** Clock error detection

0: Clock error detection is enable
1: Clock error detection is disable

The clock error detection cannot be enabled nor disabled on-the-fly when the RNG is enabled, i.e. to enable or disable CED the RNG must be disabled.

Bit 4 Reserved, must be kept at reset value.

Bit 3 **IE:** Interrupt Enable

0: RNG Interrupt is disabled
1: RNG Interrupt is enabled. An interrupt is pending as soon as DRDY=’1’, SEIS=’1’ or CEIS=1 in the RNG_SR register.

Bit 2 **RNGEN:** True random number generator enable

0: True random number generator is disabled. Analog noise sources are powered off and logic clocked by the RNG clock is gated.
1: True random number generator is enabled.

Bits 1:0 Reserved, must be kept at reset value.

27.7.2 RNG status register (RNG_SR)

Address offset: 0x004

Reset value: 0x0000 0000

31	30	29	28	27	26	25	24	23	22	21	20	19	18	17	16
Res.	Res.	Res.	Res.	Res.	Res.	Res.	Res.	Res.	Res.	Res.	Res.	Res.	Res.	Res.	Res.

15	14	13	12	11	10	9	8	7	6	5	4	3	2	1	0
Res.	Res.	Res.	Res.	Res.	Res.	Res.	Res.	Res.	SEIS	CEIS	Res.	Res.	SECS	CECS	DRDY
									rc_w0	rc_w0			r	r	r

Bits 31:7 Reserved, must be kept at reset value.

Bit 6 **SEIS:** Seed error interrupt status

This bit is set at the same time as SECS. It is cleared by writing 0. Writing 1 has no effect.

0: No faulty sequence detected

1: At least one faulty sequence has been detected. See **SECS** bit description for details.

An interrupt is pending if IE = 1 in the RNG_CR register.

Bit 5 **CEIS:** Clock error interrupt status

This bit is set at the same time as CECS. It is cleared by writing 0. Writing 1 has no effect.

0: The RNG clock is correct (fRNGCLK > fHCLK/16)

1: The RNG has been detected too slow (fRNGCLK < fHCLK/16)

An interrupt is pending if IE = 1 in the RNG_CR register.

Bits 4:3 Reserved, must be kept at reset value.

Bit 2 **SECS:** Seed error current status

0: No faulty sequence has currently been detected. If the SEIS bit is set, this means that a faulty sequence was detected and the situation has been recovered.

1: One of the noise source has provided more than 64 consecutive bits at a constant value (“0” or “1”), or more than 32 consecutive occurrence of two bits patterns (“01” or “10”)

Bit 1 **CECS:** Clock error current status

0: The RNG clock is correct (fRNGCLK> fHCLK/16). If the CEIS bit is set, this means that a slow clock was detected and the situation has been recovered.

1: The RNG clock is too slow (fRNGCLK< fHCLK/16).

Note: CECS bit is valid only if the CED bit in the RNG_CR register is set to 0.

Bit 0 **DRDY:** Data Ready

0: The RNG_DR register is not yet valid, no random data is available.

1: The RNG_DR register contains valid random data.

Once the RNG_DR register has been read, this bit returns to 0 until a new random value is generated.

If IE=1 in the RNG_CR register, an interrupt is generated when DRDY=1.

27.7.3 RNG data register (RNG_DR)

Address offset: 0x008

Reset value: 0x0000 0000

The RNG_DR register is a read-only register that delivers a 32-bit random value when read. After being read this register delivers a new random value after 42 periods of RNG clock if the output FIFO is empty.

The content of this register is valid when DRDY=1 and value is not 0x0, even if RNGEN=0.

31	30	29	28	27	26	25	24	23	22	21	20	19	18	17	16
RNDATA[31:16]															
r	r	r	r	r	r	r	r	r	r	r	r	r	r	r	r
15	14	13	12	11	10	9	8	7	6	5	4	3	2	1	0
RNDATA[15:0]															
r	r	r	r	r	r	r	r	r	r	r	r	r	r	r	r

Bits 31:0 **RNDATA[31:0]:** Random data

32-bit random data which are valid when DRDY=1. When DRDY=0 RNDATA value is zero.

It is recommended to always verify that RNG_DR is different from zero. Because when it is the case a seed error occurred between RNG_SR polling and RND_DR output reading (rare event).

27.7.4 RNG register map

Table 177 gives the RNG register map and reset values.

Table 177. RNG register map and reset map

Offset	Register name	31	30	29	28	27	26	25	24	23	22	21	20	19	18	17	16	15	14	13	12	11	10	9	8	7	6	5	4	3	2	1	0
0x000	RNG_CR	Res.	Res.	Res.	Res.	Res.	Res.	Res.	Res.	Res.	Res.	Res.	Res.	Res.	Res.	Res.	Res.	Res.	Res.	Res.	Res.	Res.	Res.	Res.	Res.	Res.	Res.	CED	Res.	IE	RNGEN	Res.	Res.
	Reset value																											0		0	0		
0x004	RNG_SR	Res.	Res.	Res.	Res.	Res.	Res.	Res.	Res.	Res.	Res.	Res.	Res.	Res.	Res.	Res.	Res.	Res.	Res.	Res.	Res.	Res.	Res.	Res.	Res.	Res.	SEIS	CEIS	Res.	Res.	SECS	CECS	DRDY
	Reset value																										0	0			0	0	0
0x008	RNG_DR	RNDATA[31:0]																															
	Reset value	0	0	0	0	0	0	0	0	0	0	0	0	0	0	0	0	0	0	0	0	0	0	0	0	0	0	0	0	0	0	0	0

Refer to *Section 2.2* for the register boundary addresses.

28 AES hardware accelerator (AES)

This section applies to STM32L486/L4A6 devices only.

28.1 Introduction

The AES hardware accelerator (AES) encrypts or decrypts data, using an algorithm and implementation fully compliant with the advanced encryption standard (AES) defined in Federal information processing standards (FIPS) publication 197.

Multiple chaining modes are supported (ECB, CBC, CTR, GCM, GMAC, CCM), for key sizes of 128 or 256 bits.

The AES accelerator is a 32-bit AHB peripheral. It supports DMA single transfers for incoming and outgoing data (two DMA channels required).

The AES peripheral provides hardware acceleration to AES cryptographic algorithms packaged in STM32 cryptographic library.

AES is an AMBA AHB slave peripheral, accessible through 32-bit word single accesses only (otherwise an AHB bus error is generated and write accesses are ignored).

28.2 AES main features

- Compliance with NIST *"Advanced encryption standard (AES)*, *FIPS publication 197*" from November 2001
- 128-bit data block processing
- Support for cipher key lengths of 128-bit and 256-bit
- Encryption and decryption with multiple chaining modes:
  - Electronic codebook (ECB) mode
  - Cipher block chaining (CBC) mode
  - Counter (CTR) mode
  - Galois counter mode (GCM)
  - Galois message authentication code (GMAC) mode
  - Counter with CBC-MAC (CCM) mode
- 51 or 75 clock cycle latency in ECB mode for processing one 128-bit block of data with, respectively, 128-bit or 256-bit key
- Integrated key scheduler with its key derivation stage (ECB or CBC decryption only)
- AMBA AHB slave peripheral, accessible through 32-bit word single accesses only
- 256-bit register for storing the cryptographic key (eight 32-bit registers)
- 128-bit register for storing initialization vector (four 32-bit registers)
- 32-bit buffer for data input and output
- Automatic data flow control with support of single-transfer direct memory access (DMA) using two channels (one for incoming data, one for processed data)
- Data-swapping logic to support 1-, 8-, 16- or 32-bit data
- Possibility for software to suspend a message if AES needs to process another message with a higher priority, then resume the original message

28.3 AES implementation

The device has a single instance of AES peripheral.

28.4 AES functional description

28.4.1 AES block diagram

Figure 190 shows the block diagram of AES.

Figure 190. AES block diagram

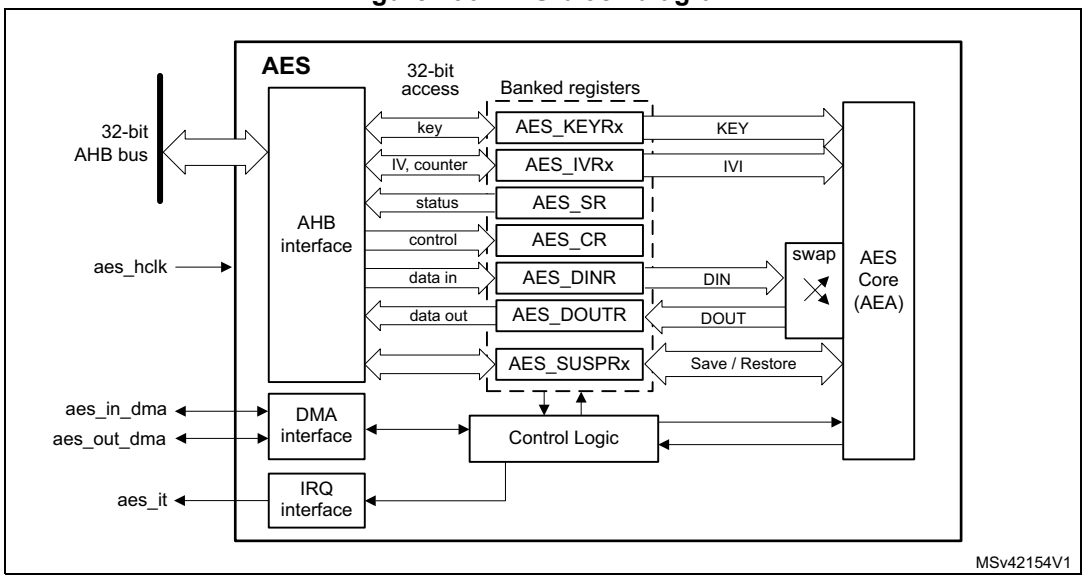

28.4.2 AES internal signals

Table 178 describes the user relevant internal signals interfacing the AES peripheral.

Table 178. AES internal input/output signals

Signal name	Signal type	Description
aes_hclk	digital input	AHB bus clock
aes_it	digital output	AES interrupt request
aes_in_dma	digital input/output	Input DMA single request/acknowledge
aes_out_dma	digital input/output	Output DMA single request/acknowledge

28.4.3 AES cryptographic core

Overview

The AES cryptographic core consists of the following components:

- AES algorithm (AEA)
- multiplier over a binary Galois field (GF2mul)
- key input
- initialization vector (IV) input
- chaining algorithm logic (XOR, feedback/counter, mask)

The AES core works on 128-bit data blocks (four words) with 128-bit or 256-bit key length. Depending on the chaining mode, the AES requires zero or one 96-bit initialization vector IV (and a 32-bit counter field).

The AES features the following modes of operation:

- **Mode 1:**

  Plaintext encryption using a key stored in the AES_KEYRx registers
- **Mode 2:**

  ECB or CBC decryption key preparation. It must be used prior to selecting Mode 3 with ECB or CBC chaining modes. The key prepared for decryption is stored automatically in the AES_KEYRx registers. Now the AES peripheral is ready to switch to Mode 3 for executing data decryption.
- **Mode 3:**

  Ciphertext decryption using a key stored in the AES_KEYRx registers. When ECB and CBC chaining modes are selected, the key must be prepared beforehand, through Mode 2.
- Mode 4:

  ECB or CBC ciphertext single decryption using the key stored in the AES_KEYRx registers (the initial key is derived automatically).

Note: Mode 2 and mode 4 are only used when performing ECB and CBC decryption.

When Mode 4 is selected only one decryption can be done, therefore usage of Mode 2 and Mode 3 is recommended instead.

The operating mode is selected by programming the MODE[1:0] bitfield of the AES_CR register. It may be done only when the AES peripheral is disabled.

Typical data processing

Typical usage of the AES is described in *Section 28.4.4: AES procedure to perform a cipher operation on page 840*.

Note: The outputs of the intermediate AEA stages are never revealed outside the cryptographic boundary, with the exclusion of the IVI bitfield.

Chaining modes

The following chaining modes are supported by AES, selected through the CHMOD[2:0] bitfield of the AES_CR register:

- Electronic code book (ECB)
- Cipher block chaining (CBC)
- Counter (CTR)
- Galois counter mode (GCM)
- Galois message authentication code (GMAC)
- Counter with CBC-MAC (CCM)

Note: The chaining mode may be changed only when AES is disabled (bit EN of the AES_CR register set).

Principle of each AES chaining mode is provided in the following subsections.

Detailed information is in dedicated sections, starting from *Section 28.4.8: AES basic chaining modes (ECB, CBC)*.

Electronic codebook (ECB) mode

Figure 191. ECB encryption and decryption principle

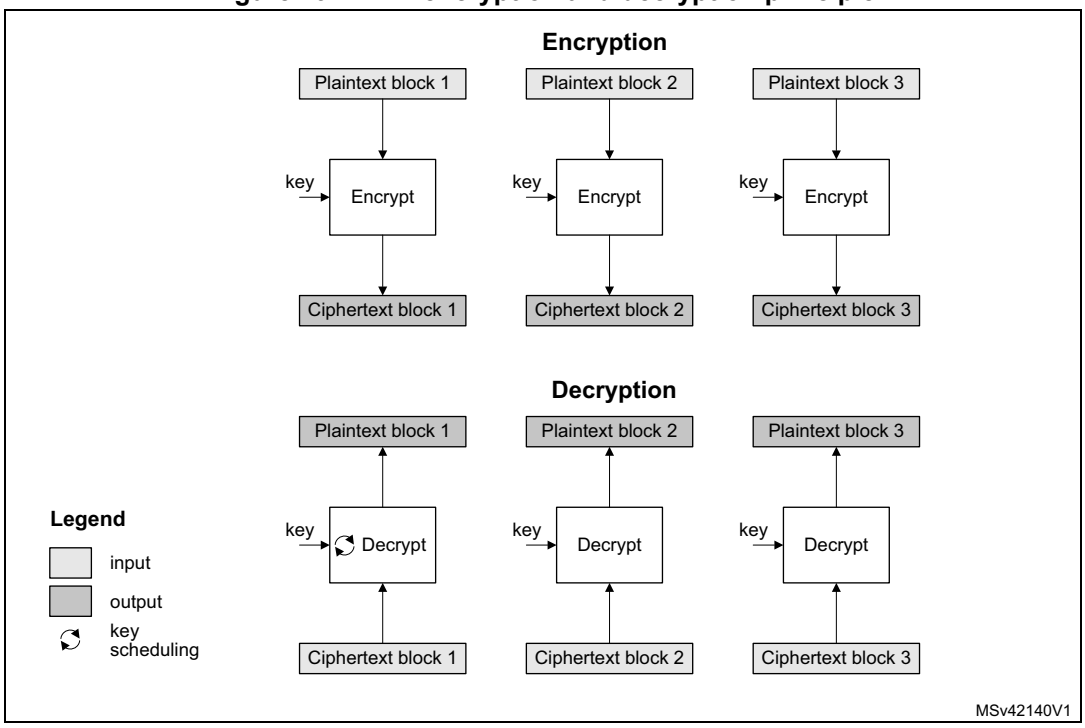

ECB is the simplest mode of operation. There are no chaining operations, and no special initialization stage. The message is divided into blocks and each block is encrypted or decrypted separately.

Note: For decryption, a special key scheduling is required before processing the first block.

Cipher block chaining (CBC) mode

Figure 192. CBC encryption and decryption principle

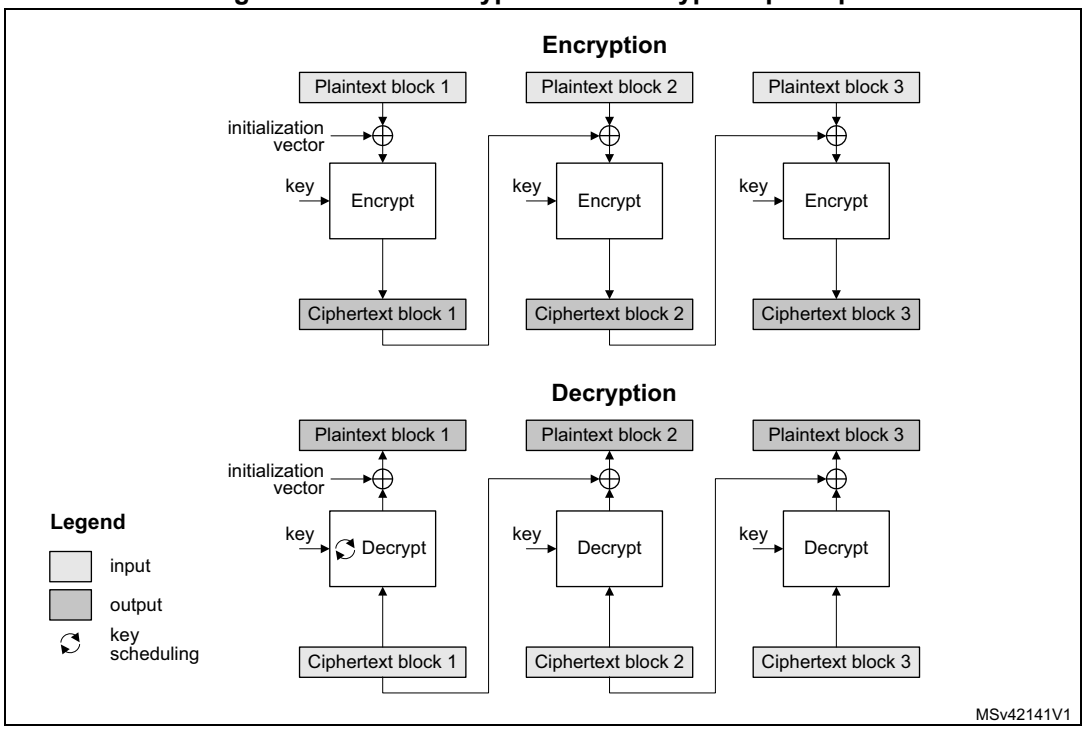

In CBC mode the output of each block chains with the input of the following block. To make each message unique, an initialization vector is used during the first block processing.

Note: For decryption, a special key scheduling is required before processing the first block.

Counter (CTR) mode

Figure 193. CTR encryption and decryption principle

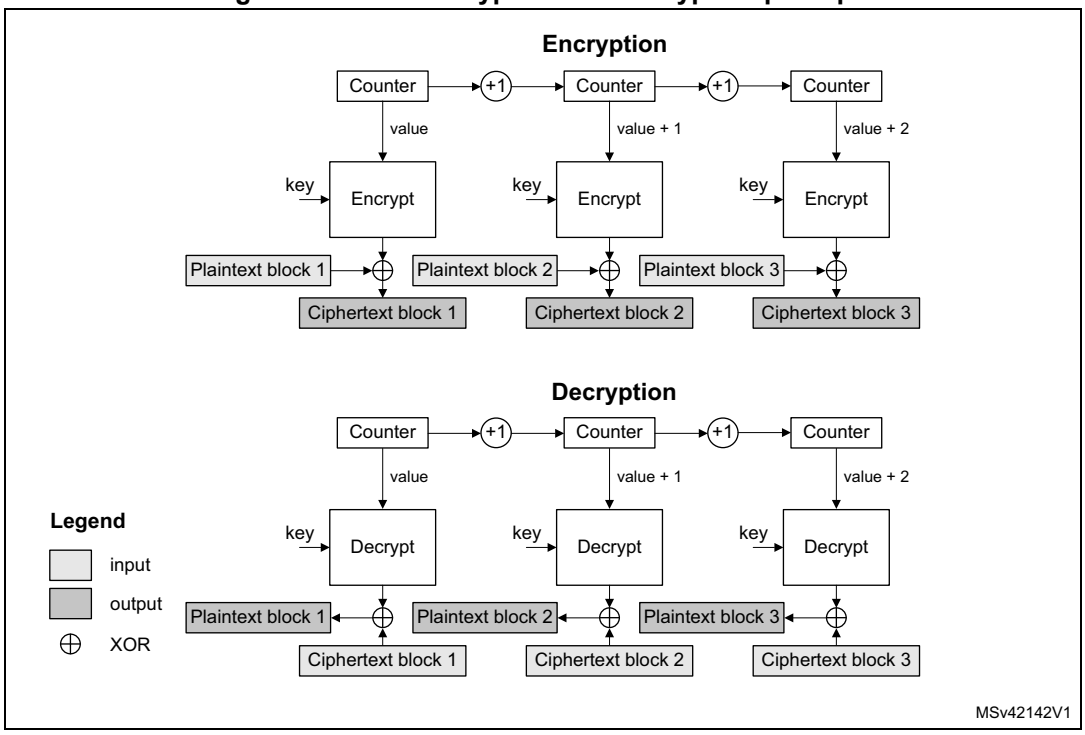

The CTR mode uses the AES core to generate a key stream. The keys are then XORed with the plaintext to obtain the ciphertext as specified in NIST *Special Publication 800-38A, Recommendation for Block Cipher Modes of Operation*.

Note: Unlike with ECB and CBC modes, no key scheduling is required for the CTR decryption, since in this chaining scheme the AES core is always used in encryption mode for producing the key stream, or counter blocks.

Galois/counter mode (GCM)

Figure 194. GCM encryption and authentication principle

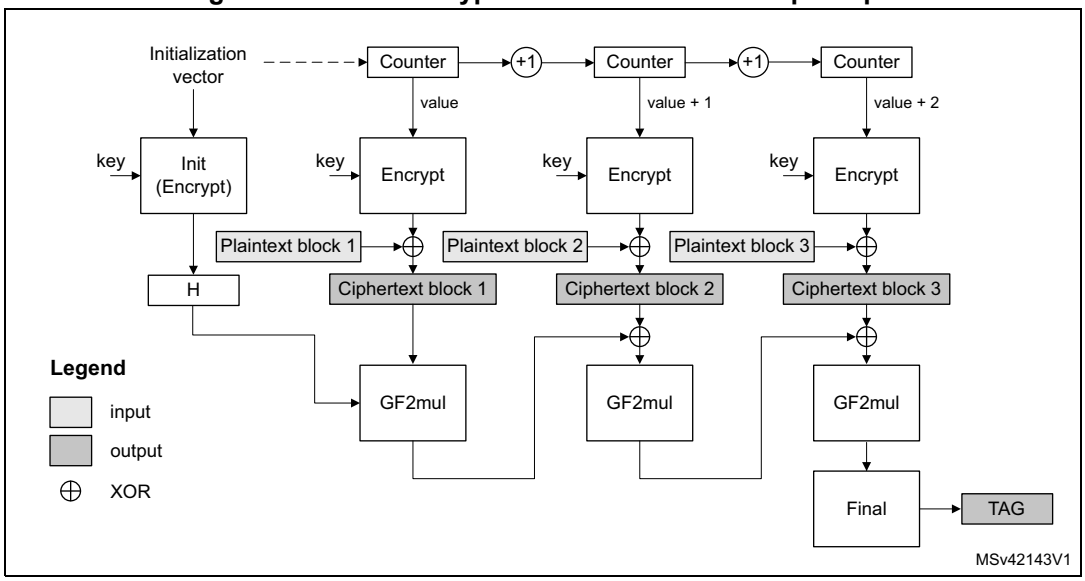

In Galois/counter mode (GCM), the plaintext message is encrypted while a message authentication code (MAC) is computed in parallel, thus generating the corresponding ciphertext and its MAC (also known as authentication tag). It is defined in NIST *Special Publication 800-38D, Recommendation for Block Cipher Modes of Operation - Galois/Counter Mode (GCM) and GMAC.*

GCM mode is based on AES in counter mode for confidentiality. It uses a multiplier over a fixed finite field for computing the message authentication code. It requires an initial value and a particular 128-bit block at the end of the message.

Galois message authentication code (GMAC) principle

Figure 195. GMAC authentication principle

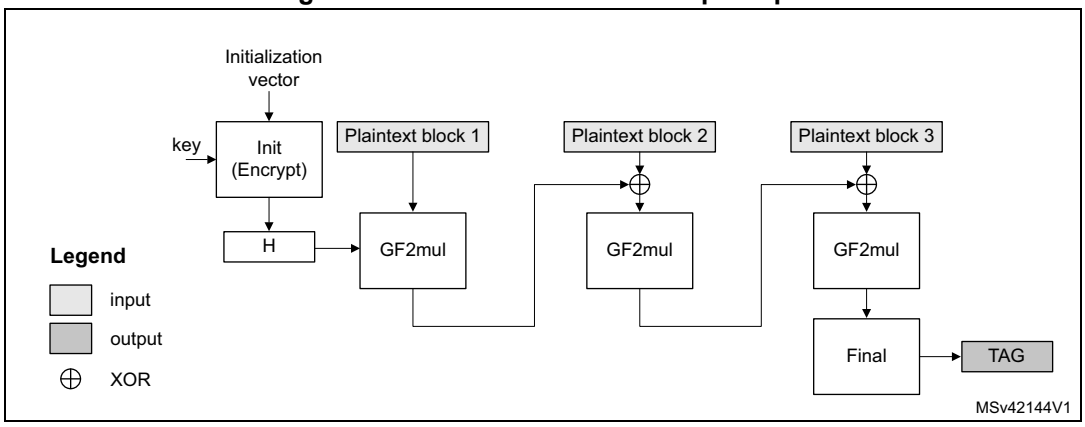

Galois message authentication code (GMAC) allows authenticating a message and generating the corresponding message authentication code (MAC). It is defined in NIST *Special Publication 800-38D, Recommendation for Block Cipher Modes of Operation - Galois/Counter Mode (GCM) and GMAC.*

GMAC is similar to GCM, except that it is applied on a message composed only by plaintext authenticated data (that is, only header, no payload).

Counter with CBC-MAC (CCM) principle

Figure 196. CCM encryption and authentication principle

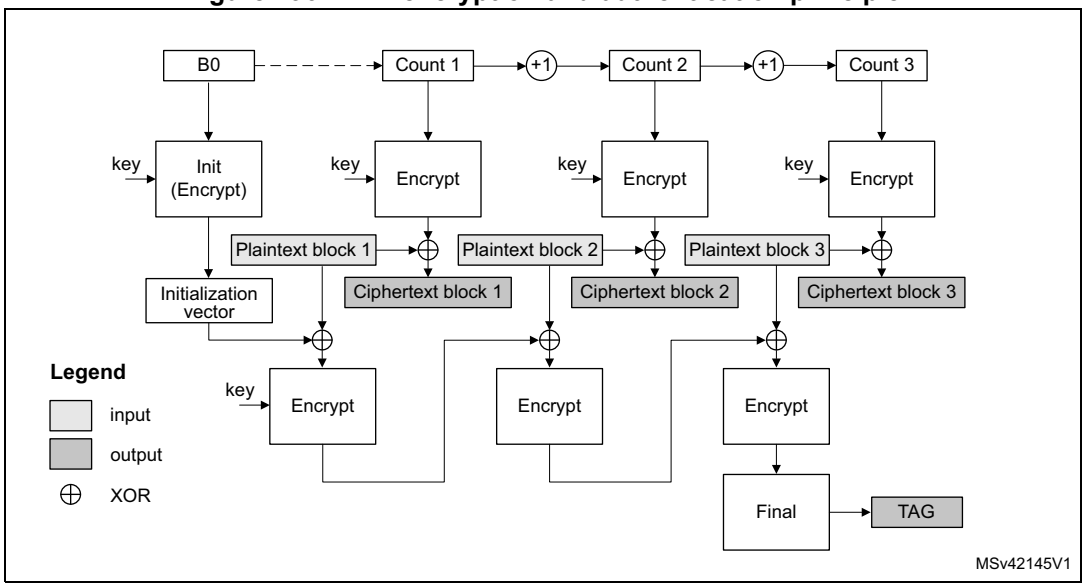

In Counter with cipher block chaining-message authentication code (CCM) mode, the plaintext message is encrypted while a message authentication code (MAC) is computed in parallel, thus generating the corresponding ciphertext and the corresponding MAC (also known as tag). It is described by NIST in *Special Publication 800-38C, Recommendation for Block Cipher Modes of Operation - The CCM Mode for Authentication and Confidentiality*.

CCM mode is based on AES in counter mode for confidentiality and it uses CBC for computing the message authentication code. It requires an initial value.

Like GCM, the CCM chaining mode can be applied on a message composed only by plaintext authenticated data (that is, only header, no payload). Note that this way of using CCM is not called CMAC (it is not similar to GCM/GMAC), and its usage is not recommended by NIST.

28.4.4 AES procedure to perform a cipher operation

Introduction

A typical cipher operation is explained below. Detailed information is provided in sections starting from *Section 28.4.8: AES basic chaining modes (ECB, CBC)*.

The flowcharts shown in *Figure 197* and *Figure 198* describe the way STM32 cryptographic library implements the AES algorithm. AES accelerates the execution of the AES-128 and AES-256 cryptographic algorithms in ECB, CBC, CTR, CCM, and GCM operating modes.

Note: For more details on the cryptographic library, refer to the UM1924 user manual "STM32 crypto library" available from www.st.com.

Figure 197. STM32 cryptolib AES flowchart examples

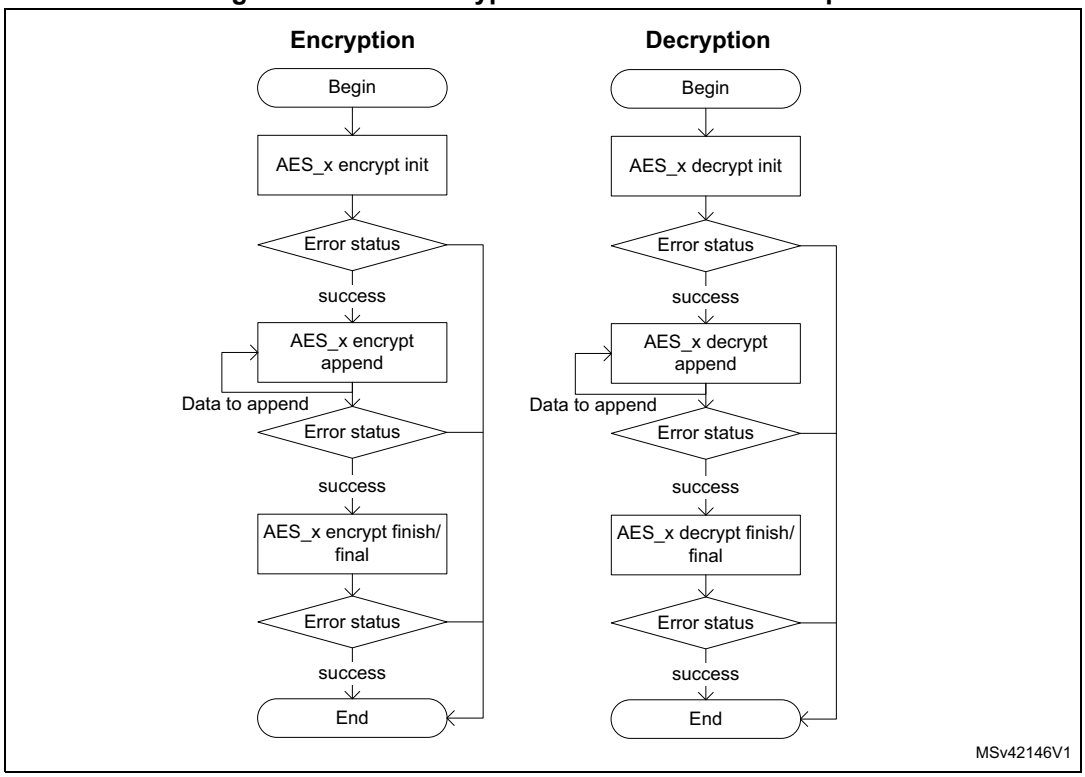

Figure 198. STM32 cryptolib AES flowchart examples (continued)

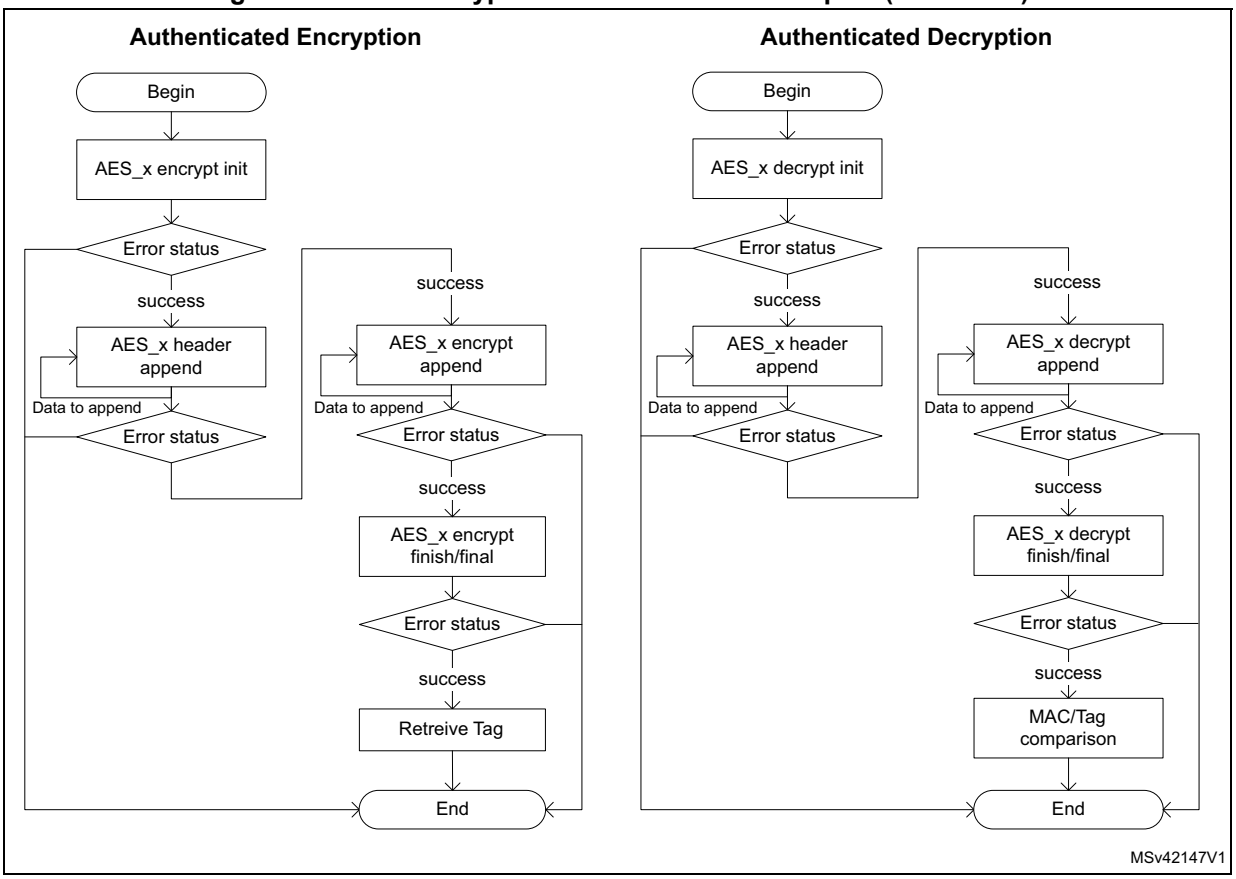

Initialization of AES

To initialize AES, first disable it by clearing the EN bit of the AES_CR register. Then perform the following steps in any order:

- Configure the AES mode, by programming the MODE[1:0] bitfield of the AES_CR register.
  - For encryption, Mode 1 must be selected (MODE[1:0] = 00).
  - For decryption, Mode 3 must be selected (MODE[1:0] = 10), unless ECB or CBC chaining modes are used. In this latter case, an initial key derivation of the encryption key must be performed, as described in *Section 28.4.5: AES decryption key preparation*.
- Select the chaining mode, by programming the CHMOD[2:0] bitfield of the AES_CR register
- Configure the key size (128-bit or 256-bit), with the KEYSIZE bitfield of the AES_CR register.
- Write a symmetric key into the AES_KEYRx registers (4 or 8 registers depending on the key size).
- Configure the data type (1-, 8-, 16- or 32-bit), with the DATATYPE[1:0] bitfield in the AES_CR register.
- When it is required (for example in CBC or CTR chaining modes), write the initialization vectors into the AES_IVRx register.

Data append

This section describes different ways of appending data for processing, where the size of data to process is not a multiple of 128 bits.

For ECB, CBC and GCM encryption mode, refer to *Section 28.4.6: AES ciphertext stealing and data padding*. The second-last and the last block management in these cases is more complex than in the sequence described in this section.

Data append through polling

This method uses flag polling to control the data append.

For all other cases, the data is appended through the following sequence:

1. Enable the AES peripheral by setting the EN bit of the AES_CR register.
2. Repeat the following sub-sequence until the payload is entirely processed:
   a) Write four input data words into the AES_DINR register.
   b) Wait until the status flag CCF is set in the AES_SR, then read the four data words from the AES_DOUTR register.
   c) Clear the CCF flag, by setting the CCFC bit of the AES_CR register.
   d) If the data block just processed is the second-last block of the message and the significant data in the last block to process is inferior to 128 bits, pad the remainder of the last block with zeros
3. Discard the data that is not part of the payload, then disable the AES peripheral by clearing the EN bit of the AES_CR register.

Note: Up to three wait cycles are automatically inserted between two consecutive writes to the AES_DINR register, to allow sending the key to the AES processor.

Data append using interrupt

The method uses interrupt from the AES peripheral to control the data append, through the following sequence:

1. Enable interrupts from AES by setting the CCFIE bit of the AES_CR register.
2. Enable the AES peripheral by setting the EN bit of the AES_CR register.
3. Write first four input data words into the AES_DINR register.
4. Handle the data in the AES interrupt service routine, upon interrupt:
   a) Read four output data words from the AES_DOUTR register.
   b) Clear the CCF flag and thus the pending interrupt, by setting the CCFC bit of the AES_CR register
   c) If the data block just processed is the second-last block of an message and the significant data in the last block to process is inferior to 128 bits, pad the remainder of the last block with zeros. Then proceed with point 4e).
   d) If the data block just processed is the last block of the message, discard the data that is not part of the payload, then disable the AES peripheral by clearing the EN bit of the AES_CR register and quit the interrupt service routine.
   e) Write next four input data words into the AES_DINR register and quit the interrupt service routine.

Note: AES is tolerant of delays between consecutive read or write operations, which allows, for example, an interrupt from another peripheral to be served between two AES computations.

Data append using DMA

With this method, all the transfers and processing are managed by DMA and AES. To use the method, proceed as follows:

1. Prepare the last four-word data block (if the data to process does not fill it completely), by padding the remainder of the block with zeros.
2. Configure the DMA controller so as to transfer the data to process from the memory to the AES peripheral input and the processed data from the AES peripheral output to the memory, as described in *Section 28.4.16: AES DMA interface*. Configure the DMA controller so as to generate an interrupt on transfer completion.
3. Enable the AES peripheral by setting the EN bit of the AES_CR register
4. Enable DMA requests by setting the DMAINEN and DMAOUTEN bits of the AES_CR register.
5. Upon DMA interrupt indicating the transfer completion, get the AES-processed data from the memory.

Note: The CCF flag has no use with this method, because the reading of the AES_DOUTR register is managed by DMA automatically, without any software action, at the end of the computation phase.

28.4.5 AES decryption key preparation

For an ECB or CBC decryption, a key for the first round of decryption must be derived from the key of the last round of encryption. This is why a complete key schedule of encryption is required before performing the decryption. This key preparation is **not required** for AES decryption in modes other than ECB or CBC.

Recommended method is to select the Mode 2 by setting to 01 the MODE[1:0] bitfield of the AES_CR (key process only), then proceed with the decryption by setting MODE[1:0] to 10 (Mode 3, decryption only). Mode 2 usage is described below:

1. Disable the AES peripheral by clearing the EN bit of the AES_CR register.
2. Select Mode 2 by setting to 01 the MODE[1:0] bitfield of the AES_CR. The CHMOD[2:0] bitfield is not significant in this case because this key derivation mode is independent of the chaining algorithm selected.
3. Set key length to 128 or 256 bits, via KEYSIZE bit of AES_CR register.
4. Write the AES_KEYRx registers (128 or 256 bits) with encryption key, as shown in *Figure 199*. Writes to the AES_IVRx registers have no effect.
5. Enable the AES peripheral, by setting the EN bit of the AES_CR register.
6. Wait until the CCF flag is set in the AES_SR register.
7. Derived key is available in AES core, ready to use for decryption. Application can also read the AES_KEYRx register to obtain the derived key if needed, as shown in *Figure 199* (the processed key is loaded automatically into the AES_KEYRx registers).

Note: The AES is disabled by hardware when the derivation key is available.

To restart a derivation key computation, repeat steps 4, 5, 6 and 7.

Figure 199. Encryption key derivation for ECB/CBC decryption (Mode 2)

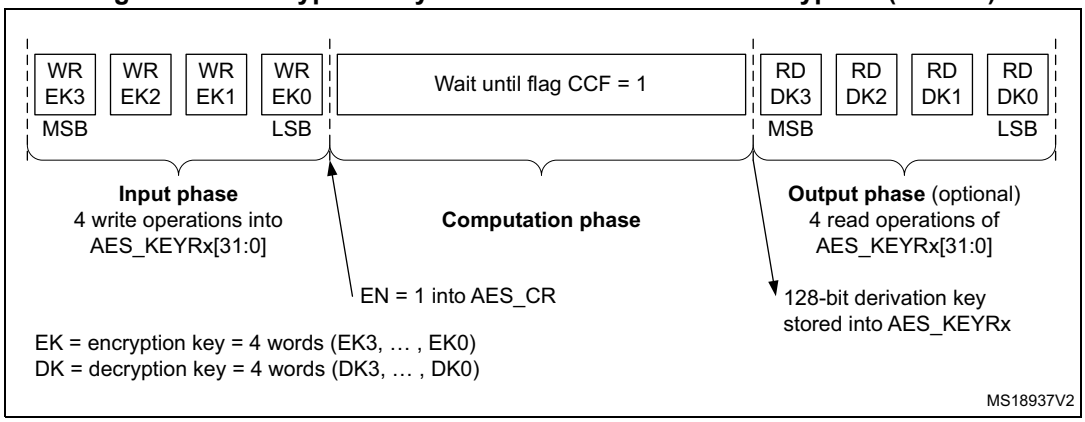

If the software stores the initial key prepared for decryption, it is enough to do the key schedule operation only once for all the data to be decrypted with a given cipher key.

Note: The operation of the key preparation lasts 80 or 109 clock cycles, depending on the key size (128- or 256-bit).

Note: Alternative key preparation is to select Mode 4 by setting to 11 the MODE[1:0] bitfield of the AES_CR register. In this case Mode 3 cannot be used.

28.4.6 AES ciphertext stealing and data padding

When using AES in ECB or CBC modes to manage messages the size of which is not a multiple of the block size (128 bits), ciphertext stealing techniques are used, such as those described in NIST *Special Publication 800-38A, Recommendation for Block Cipher Modes of Operation: Three Variants of Ciphertext Stealing for CBC Mode*. Since the AES peripheral on the device does not support such techniques, **the last two blocks** of input data must be handled in a special way by the application.

Note: Ciphertext stealing techniques are not documented in this reference manual.

Similarly, when AES is used in other modes than ECB or CBC, an incomplete input data block (that is, block with input data shorter than 128 bits) must be padded with zeros prior to encryption (that is, extra bits must be appended to the trailing end of the data string). After decryption, the extra bits must be discarded. As AES does not implement automatic data padding operation to **the last block**, the application must follow the recommendation given in *Section 28.4.4: AES procedure to perform a cipher operation on page 840* to manage messages the size of which is not a multiple of 128 bits.

Note: Padding data are swapped in a similar way as normal data, according to the DATATYPE[1:0] field of the AES_CR register (see Section 28.4.13: .AES data registers and data swapping on page 866 for details).

A workaround is required in order to properly compute authentication tags for **GCM encryption**, when the input data in the last block is **inferior to 128 bits**. During GCM encryption payload phase and before inserting a last plaintext block smaller than 128 bits, then application must apply the following steps:

1. Disable the AES peripheral by clearing the EN bit of the AES_CR register
2. Change the mode to CTR by writing 010 to the CHMOD[2:0] bitfield of the AES_CR register.
3. Pad the last block (smaller than 128 bits) with zeros to have a complete block of 128 bits, then write it into AES_DINR register.
4. Upon encryption completion, read the 128-bit ciphertext from the AES_DOUTR register and store it as intermediate data.
5. Change again the mode to GCM by writing 011 to the CHMOD[2:0] bitfield of the AES_CR register.
6. Select Final phase by writing 11 to the GCMPH[1:0] bitfield of the AES_CR register.
7. In the intermediate data, set to zero the bits corresponding to the padded bits of the last block of payload, then insert the resulting data into AES_DINR register.
8. Wait for operation completion, and read data on AES_DOUTR. This data is to be discarded.
9. Apply the normal Final phase as described in *Section 28.4.10: AES Galois/counter mode (GCM) on page 854*

28.4.7 AES task suspend and resume

A message can be suspended if another message with a higher priority must be processed. When this highest priority message is sent, the suspended message can resume in both encryption or decryption mode.

Suspend/resume operations do not break the chaining operation and the message processing can resume as soon as AES is enabled again to receive the next data block.

Figure 200 gives an example of suspend/resume operation: Message 1 is suspended in order to send a shorter and higher-priority Message 2.

Figure 200. Example of suspend mode management

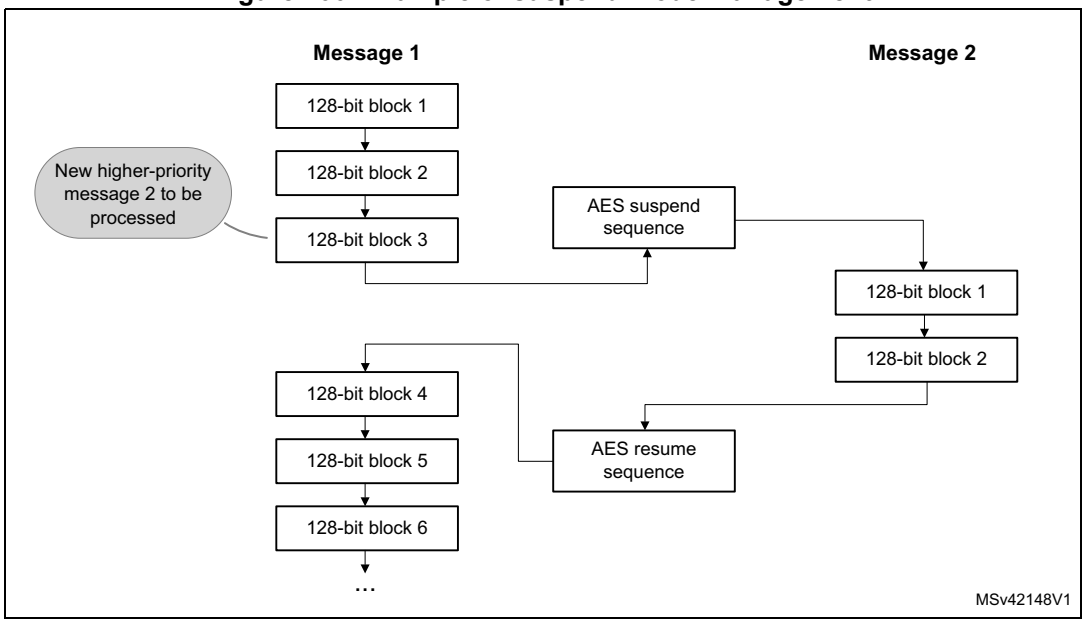

A detailed description of suspend/resume operations is in the sections dedicated to each AES mode.

28.4.8 AES basic chaining modes (ECB, CBC)

Overview

This section gives a brief explanation of the four basic operation modes provided by the AES computing core: ECB encryption, ECB decryption, CBC encryption and CBC decryption. For detailed information, refer to the FIPS publication 197 from November 26, 2001.

Figure 201 illustrates the electronic codebook (ECB) encryption.

Figure 201. ECB encryption

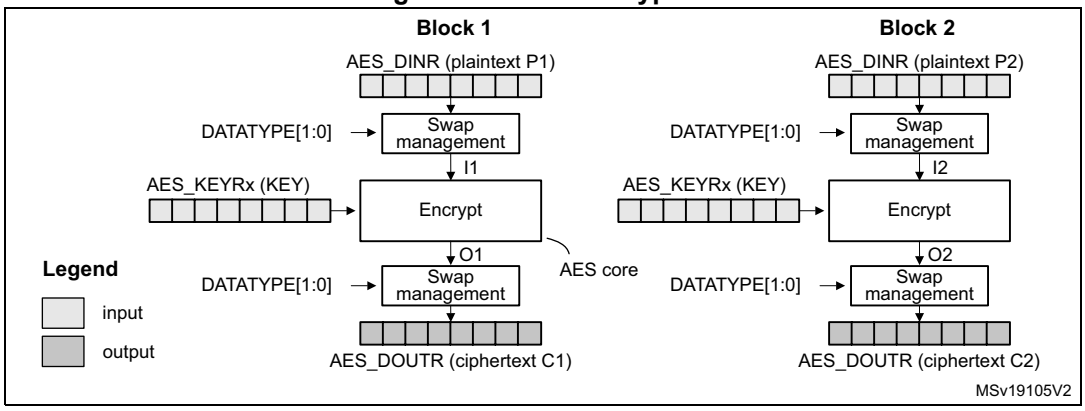

In ECB encrypt mode, the 128-bit plaintext input data block Px in the AES_DINR register first goes through bit/byte/half-word swapping. The swap result Ix is processed with the AES core set in encrypt mode, using a 128- or 256-bit key. The encryption result Ox goes through bit/byte/half-word swapping, then is stored in the AES_DOUTR register as 128-bit ciphertext output data block Cx. The ECB encryption continues in this way until the last complete plaintext block is encrypted.

Figure 202 illustrates the electronic codebook (ECB) decryption.

Figure 202. ECB decryption

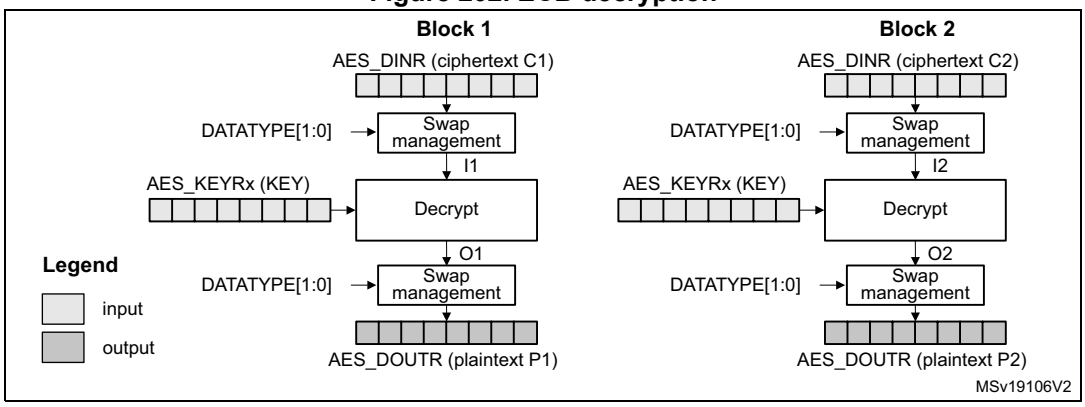

To perform an AES decryption in the ECB mode, the secret key has to be prepared by collecting the last-round encryption key (which requires to first execute the complete key schedule for encryption), and using it as the first-round key for the decryption of the ciphertext. This preparation is supported by the AES core.

In ECB decrypt mode, the 128-bit ciphertext input data block C1 in the AES_DINR register first goes through bit/byte/half-word swapping. The keying sequence is reversed compared to that of the ECB encryption. The swap result I1 is processed with the AES core set in decrypt mode, using the formerly prepared decryption key. The decryption result goes through bit/byte/half-word swapping, then is stored in the AES_DOUTR register as 128-bit plaintext output data block P1. The ECB decryption continues in this way until the last complete ciphertext block is decrypted.

Figure 203 illustrates the cipher block chaining (CBC) encryption mode.

Figure 203. CBC encryption

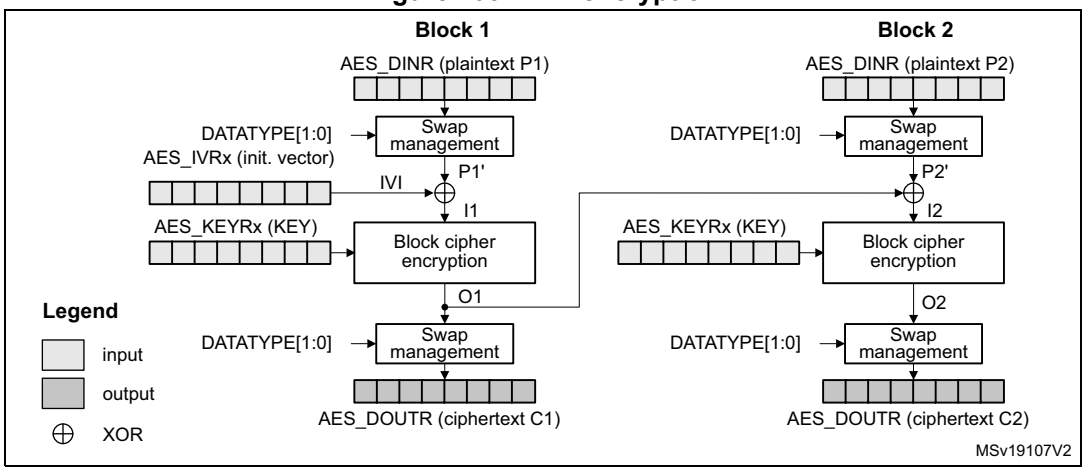

In CBC encrypt mode, the first plaintext input block, after bit/byte/half-word swapping (P1'), is XOR-ed with a 128-bit IVI bitfield (initialization vector and counter), producing the I1 input data for encrypt with the AES core, using a 128- or 256-bit key. The resulting 128-bit output block O1, after swapping operation, is used as ciphertext C1. The O1 data is then XOR-ed with the second-block plaintext data P2' to produce the I2 input data for the AES core to produce the second block of ciphertext data. The chaining of data blocks continues in this way until the last plaintext block in the message is encrypted.

If the message size is not a multiple of 128 bits, the final partial data block is encrypted in the way explained in *Section 28.4.6: AES ciphertext stealing and data padding*.

Figure 204 illustrates the cipher block chaining (CBC) decryption mode.

Figure 204. CBC decryption

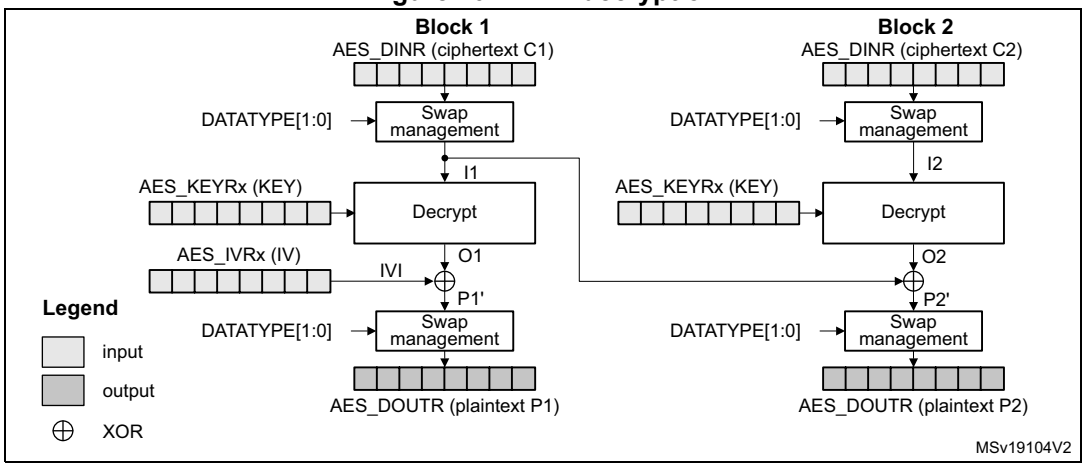

In CBC decrypt mode, like in ECB decrypt mode, the secret key must be prepared to perform an AES decryption.

After the key preparation process, the decryption goes as follows: the first 128-bit ciphertext block (after the swap operation) is used directly as the AES core input block I1 for decrypt operation, using the 128-bit or 256-bit key. Its output O1 is XOR-ed with the 128-bit IVI field (that must be identical to that used during encryption) to produce the first plaintext block P1.

The second ciphertext block is processed in the same way as the first block, except that the I1 data from the first block is used in place of the initialization vector.

The decryption continues in this way until the last complete ciphertext block is decrypted.

If the message size is not a multiple of 128 bits, the final partial data block is decrypted in the way explained in *Section 28.4.6: AES ciphertext stealing and data padding*.

For more information on data swapping, refer to *Section 28.4.13: .AES data registers and data swapping*.

ECB/CBC encryption sequence

The sequence of events to perform an ECB/CBC encryption (more detail in *Section 28.4.4*):

1. Disable the AES peripheral by clearing the EN bit of the AES_CR register.
2. Select the Mode 1 by to 00 the MODE[1:0] bitfield of the AES_CR register and select ECB or CBC chaining mode by setting the CHMOD[2:0] bitfield of the AES_CR register to 000 or 001, respectively. Data type can also be defined, using DATATYPE[1:0] bitfield.
3. Select 128- or 256-bit key length through the KEYSIZE bit of the AES_CR register.
4. Write the AES_KEYRx registers (128 or 256 bits) with encryption key. Fill the AES_IVRx registers with the initialization vector data if CBC mode has been selected.
5. Enable the AES peripheral by setting the EN bit of the AES_CR register.
6. Write the AES_DINR register four times to input the plaintext (MSB first), as shown in *Figure 205*.
7. Wait until the CCF flag is set in the AES_SR register.
8. Read the AES_DOUTR register four times to get the ciphertext (MSB first) as shown in *Figure 205*. Then clear the CCF flag by setting the CCFC bit of the AES_CR register.
9. Repeat steps 6,7,8 to process all the blocks with the same encryption key.

Figure 205. ECB/CBC encryption (Mode 1)

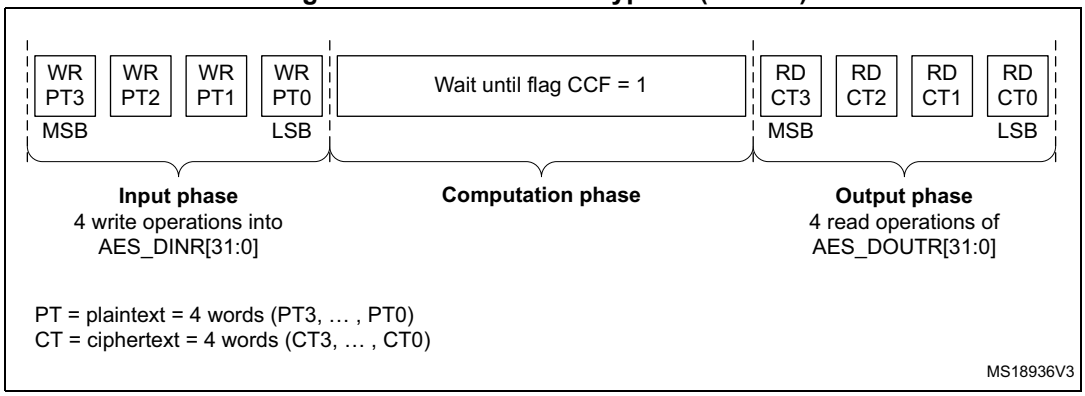

ECB/CBC decryption sequence

The sequence of events to perform an AES ECB/CBC decryption is as follows (more detail in *Section 28.4.4*):

1. Follow the steps described in *Section 28.4.5: AES decryption key preparation on page 844*, in order to prepare the decryption key in AES core.
2. Disable the AES peripheral by clearing the EN bit of the AES_CR register.
3. Select the Mode 3 by setting to 10 the MODE[1:0] bitfield of the AES_CR register and select ECB or CBC chaining mode by setting the CHMOD[2:0] bitfield of the AES_CR register to 000 or 001, respectively. Data type can also be defined, using DATATYPE[1:0] bitfield.
4. Select key length of 128 or 256 bits via KEYSIZE bitfield of the AES_CR register.
5. Write the AES_IVRx registers with the initialization vector (required in CBC mode only).
6. Enable AES by setting the EN bit of the AES_CR register.
7. Write the AES_DINR register four times to input the cipher text (MSB first), as shown in *Figure 206*.
8. Wait until the CCF flag is set in the AES_SR register.
9. Read the AES_DOUTR register four times to get the plain text (MSB first), as shown in *Figure 206*. Then clear the CCF flag by setting the CCFC bit of the AES_CR register.
10. Repeat steps 7,8,9 to process all the blocks encrypted with the same key.

Figure 206. ECB/CBC decryption (Mode 3)

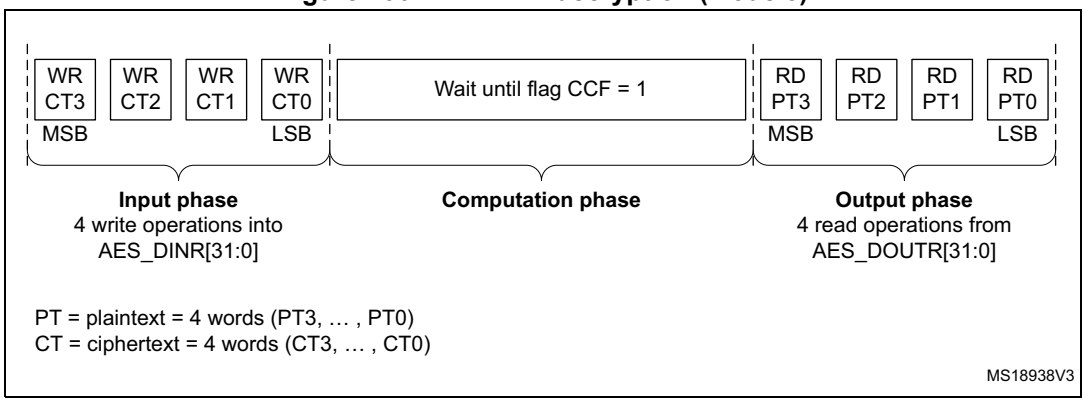

Suspend/resume operations in ECB/CBC modes

To suspend the processing of a message, proceed as follows:

1. If DMA is used, stop the AES DMA transfers to the IN FIFO by clearing the DMAINEN bit of the AES_CR register.
2. If DMA is not used, read four times the AES_DOUTR register to save the last processed block. If DMA is used, wait until the CCF flag is set in the AES_SR register

then stop the DMA transfers from the OUT FIFO by clearing the DMAOUTEN bit of the AES_CR register.

3. If DMA is not used, poll the CCF flag of the AES_SR register until it becomes 1 (computation completed).
4. Clear the CCF flag by setting the CCFC bit of the AES_CR register.
5. Save initialization vector registers (only required in CBC mode as AES_IVRx registers are altered during the data processing).
6. Disable the AES peripheral by clearing the bit EN of the AES_CR register.
7. Save the current AES configuration in the memory (except AES initialization vector values).
8. If DMA is used, save the DMA controller status (pointers for IN and OUT data transfers, number of remaining bytes, and so on).

Note: In point 7, the derived key information stored in AES_KEYRx registers can optionally be saved in memory if the interrupted process is a decryption. Otherwise those registers do not need to be saved as the original key value is known by the application

To resume the processing of a message, proceed as follows:

1. If DMA is used, configure the DMA controller so as to complete the rest of the FIFO IN and FIFO OUT transfers.
2. Ensure that AES is disabled (the EN bit of the AES_CR must be 0).
3. Restore the AES_CR and AES_KEYRx register setting, using the values of the saved configuration. In case of decryption, derived key information can be written in AES_KEYRx register instead of the original key value.
4. Prepare the decryption key as described in *Section 28.4.5: AES decryption key preparation* (only required for ECB or CBC decryption). This step is not necessary if derived key information has been loaded in AES_KEYRx registers.
5. Restore AES_IVRx registers using the saved configuration (only required in CBC mode).
6. Enable the AES peripheral by setting the EN bit of the AES_CR register.
7. If DMA is used, enable AES DMA transfers by setting the DMAINEN and DMAOUTEN bits of the AES_CR register.

Alternative single ECB/CBC decryption using Mode 4

The sequence of events to perform a single round of ECB/CBC decryption using Mode 4 is:

1. Disable the AES peripheral by clearing the EN bit of the AES_CR register.
2. Select the Mode 4 by setting to 11 the MODE[1:0] bitfield of the AES_CR register and select ECB or CBC chaining mode by setting the CHMOD[2:0] bitfield of the AES_CR register to 000 or 001, respectively.
3. Select key length of 128 or 256 bits via KEYSIZE bitfield of the AES_CR register.
4. Write the AES_KEYRx registers with the encryption key. Write the AES_IVRx registers if the CBC mode is selected.
5. Enable the AES peripheral by setting the EN bit of the AES_CR register.
6. Write the AES_DINR register four times to input the cipher text (MSB first).
7. Wait until the CCF flag is set in the AES_SR register.
8. Read the AES_DOUTR register four times to get the plain text (MSB first). Then clear the CCF flag by setting the CCFC bit of the AES_CR register.

Note: When mode 4 is selected mode 3 cannot be used.

In mode 4, the AES_KEYRx registers contain the encryption key during all phases of the processing. No derivation key is stored in these registers. It is stored internally in AES.

28.4.9 AES counter (CTR) mode

Overview

The counter mode (CTR) uses AES as a key-stream generator. The generated keys are then XOR-ed with the plaintext to obtain the ciphertext.

CTR chaining is defined in NIST *Special Publication 800-38A, Recommendation for Block Cipher Modes of Operation.* A typical message construction in CTR mode is given in *Figure 207*.

Figure 207. Message construction in CTR mode

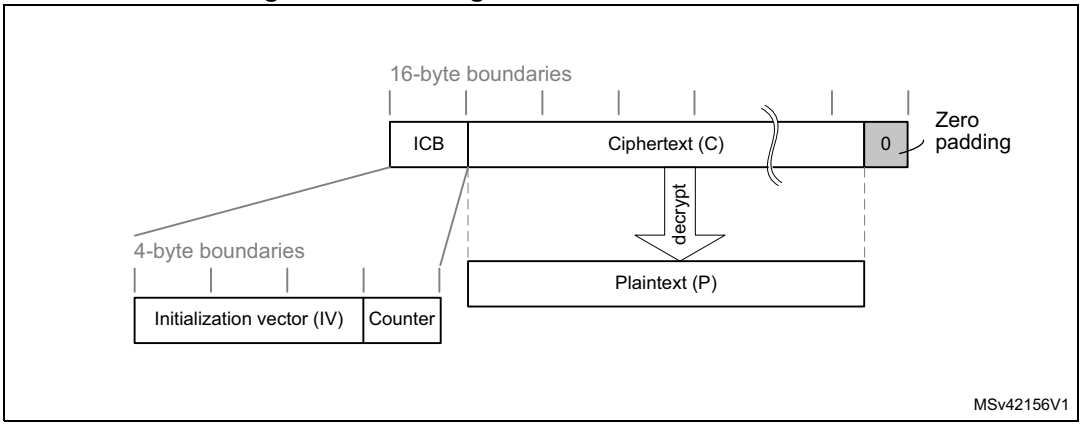

The structure of this message is:

- A 16-byte initial counter block (ICB), composed of two distinct fields:
  - **Initialization vector** (IV): a 96-bit value that must be unique for each encryption cycle with a given key.
  - **Counter**: a 32-bit big-endian integer that is incremented each time a block processing is completed. The initial value of the counter should be set to 1.
- The plaintext P is encrypted as ciphertext C, with a known length. This length can be non-multiple of 16 bytes, in which case a plaintext padding is required.

CTR encryption and decryption

Figure 208 and *Figure 209* describe the CTR encryption and decryption process, respectively, as implemented in the AES peripheral. The CTR mode is selected by writing 010 to the CHMOD[2:0] bitfield of AES_CR register.

Figure 208. CTR encryption

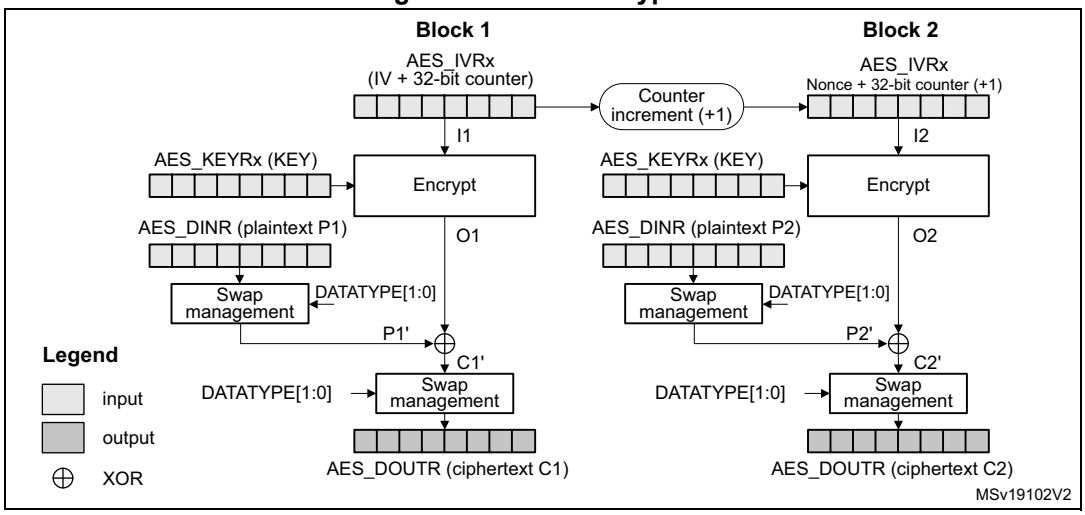

Figure 209. CTR decryption

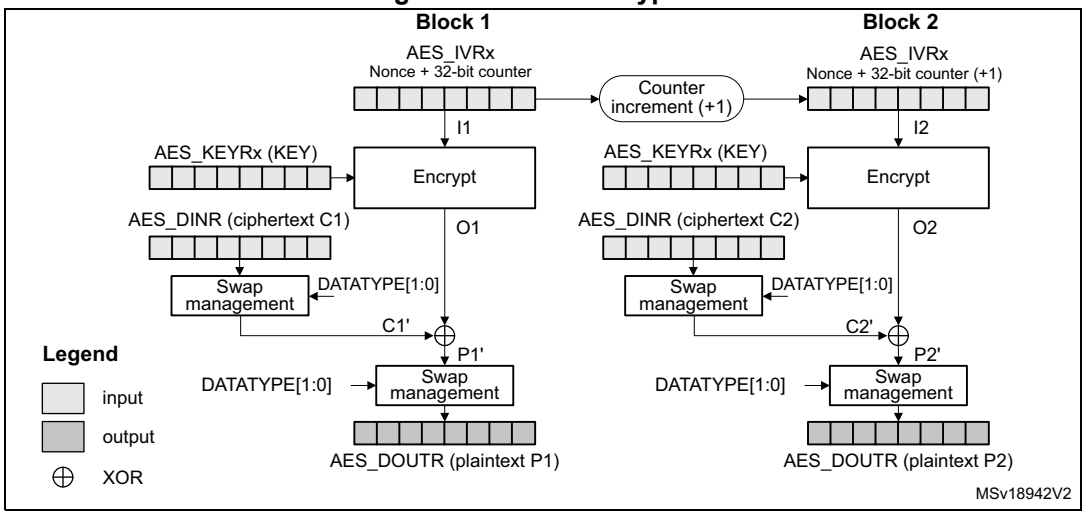

In CTR mode, the cryptographic core output (also called keystream) Ox is XOR-ed with relevant input block (Px' for encryption, Cx' for decryption), to produce the correct output block (Cx' for encryption, Px' for decryption). Initialization vectors in AES must be initialized as shown in *Table 179*.

Table 179. CTR mode initialization vector definition

AES_IVR3[31:0]	AES_IVR2[31:0]	AES_IVR1[31:0]	AES_IVR0[31:0]
Nonce[31:0]	Nonce[63:32]	Nonce[95:64]	32-bit counter = 0x0001

Unlike in CBC mode that uses the AES_IVRx registers only once when processing the first data block, in CTR mode AES_IVRx registers are used for processing each data block, and the AES peripheral increments the counter bits of the initialization vector (leaving the nonce bits unchanged).

CTR decryption does not differ from CTR encryption, since the core always encrypts the current counter block to produce the key stream that is then XOR-ed with the plaintext (CTR

encryption) or ciphertext (CTR decryption) input. In CTR mode, the MODE[1:0] bitfield settings 11, 10 or 00 default all to encryption mode, and the setting 01 (key derivation) is forbidden.

The sequence of events to perform an encryption or a decryption in CTR chaining mode:

1. Ensure that AES is disabled (the EN bit of the AES_CR must be 0).
2. Select CTR chaining mode by setting to 010 the CHMOD[2:0] bitfield of the AES_CR register. Set MODE[1:0] bitfield to any value other than 01.
3. Initialize the AES_KEYRx registers, and load the AES_IVRx registers as described in *Table 179*.
4. Set the EN bit of the AES_CR register, to start encrypting the current counter (EN is automatically reset when the calculation finishes).
5. If it is the last block, pad the data with zeros to have a complete block, if needed.
6. Append data in AES, and read the result. The three possible scenarios are described in *Section 28.4.4: AES procedure to perform a cipher operation*.
7. Repeat the previous step till the second-last block is processed. For the last block, apply the two previous steps and discard the bits that are not part of the payload (if the size of the significant data in the last input block is less than 16 bytes).

Suspend/resume operations in CTR mode

Like for the CBC mode, it is possible to interrupt a message to send a higher priority message, and resume the message that was interrupted. Detailed CBC suspend/resume sequence is described in *Section 28.4.8: AES basic chaining modes (ECB, CBC)*.

Note: Like for CBC mode, the AES_IVRx registers must be reloaded during the resume operation.

28.4.10 AES Galois/counter mode (GCM)

Overview

The AES Galois/counter mode (GCM) allows encrypting and authenticating a plaintext message into the corresponding ciphertext and tag (also known as message authentication code). To ensure confidentiality, GCM algorithm is based on AES counter mode. It uses a multiplier over a fixed finite field to generate the tag.

GCM chaining is defined in NIST *Special Publication 800-38D, Recommendation for Block Cipher Modes of Operation - Galois/Counter Mode (GCM) and GMAC.* A typical message construction in GCM mode is given in *Figure 210*.

Figure 210. Message construction in GCM

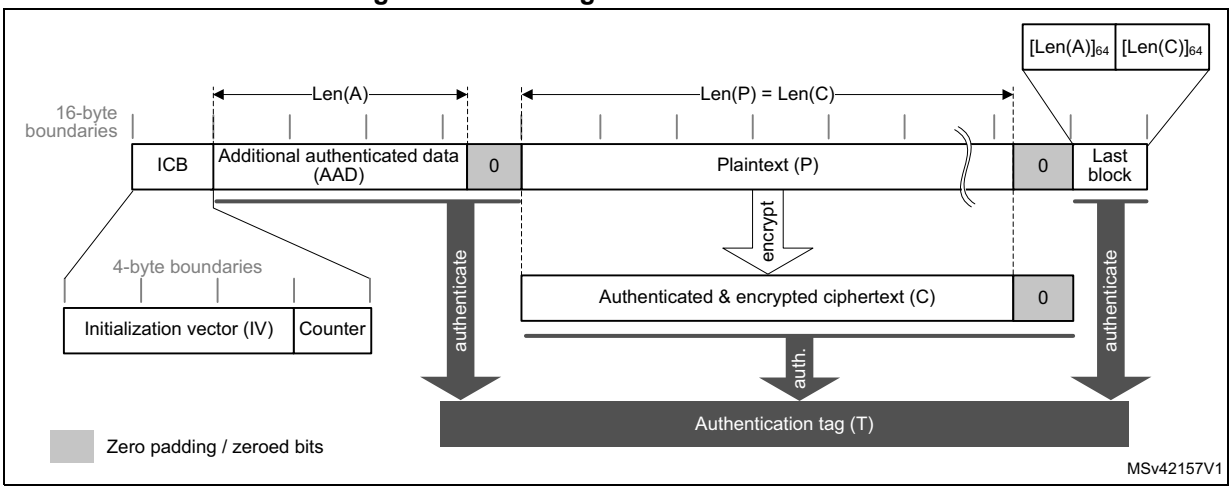

The message has the following structure:

- **16-byte initial counter block (ICB)**, composed of two distinct fields:
  - **Initialization vector (IV):** a 96-bit value that must be unique for each encryption cycle with a given key. Note that the GCM standard supports IVs with less than 96 bits, but in this case strict rules apply.
  - **Counter:** a 32-bit big-endian integer that is incremented each time a block processing is completed. According to NIST specification, the counter value is 0x2 when processing the first block of payload.
- **Authenticated header AAD** (also knows as additional authentication data) has a known length Len(A) that may be a non-multiple of 16 bytes, and must not exceed $2^{64} – 1$ bits. This part of the message is only authenticated, not encrypted.
- **Plaintext message P** is both authenticated and encrypted as ciphertext C, with a known length Len(P) that may be non-multiple of 16 bytes, and cannot exceed 2^{32} - 2 128-bit blocks.
- **Last block** contains the AAD header length (bits [32:63]) and the payload length (bits [96:127]) information, as shown in *Table 180*.

The GCM standard specifies that ciphertext C has the same bit length as the plaintext P.

When a part of the message (AAD or P) has a length that is a non-multiple of 16-bytes a special padding scheme is required.

Table 180. GCM last block definition

Endianness	Bit[0] ---------- Bit[31]	Bit[32]---------- Bit[63]	Bit[64] -------- Bit[95]	Bit[96] --------- Bit[127]
Input data	0x0	AAD length[31:0]	0x0	Payload length[31:0]

GCM processing

Figure 211 describes the GCM implementation in the AES peripheral. The GCM is selected by writing 011 to the CHMOD[2:0] bitfield of the AES_CR register.

Figure 211. GCM authenticated encryption

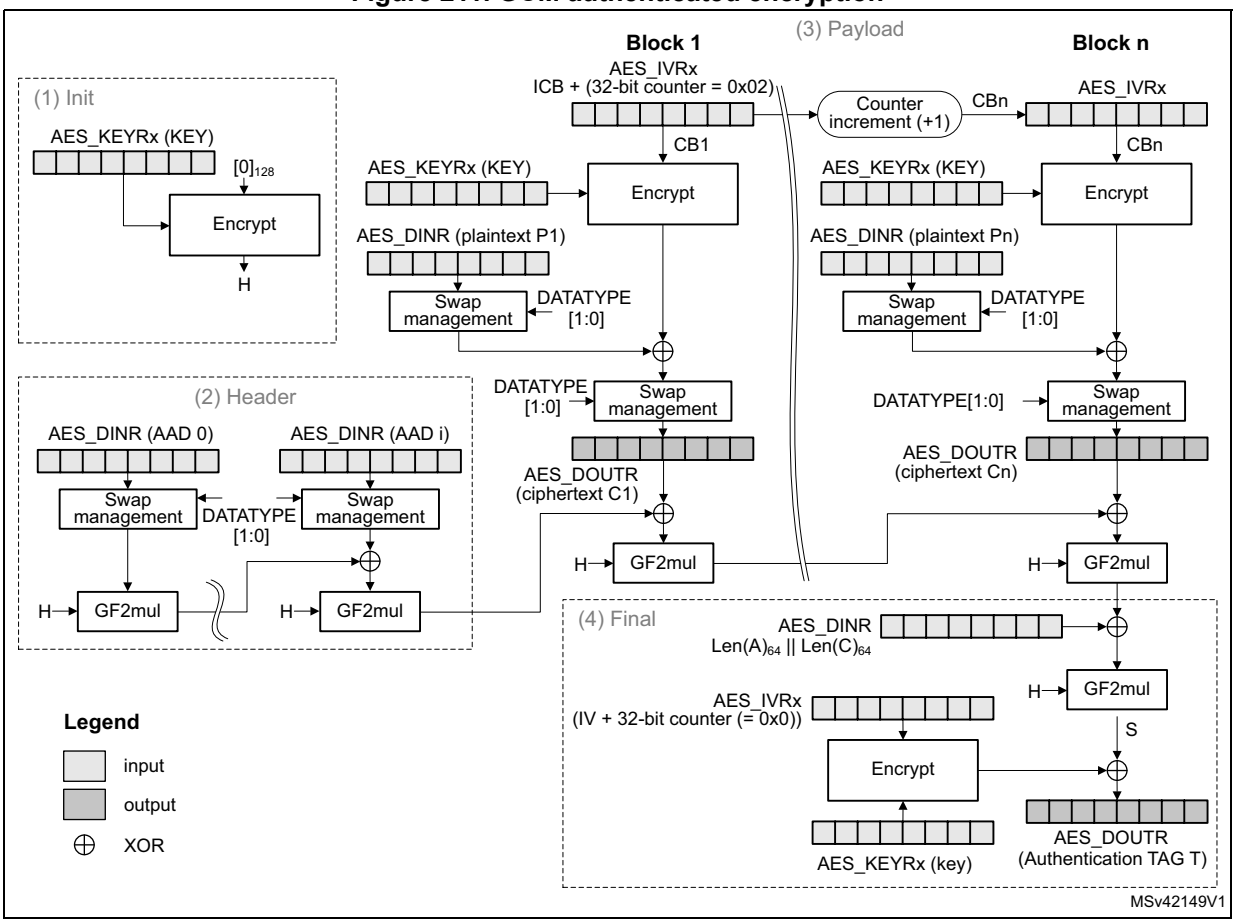

The mechanism for the confidentiality of the plaintext in GCM mode is similar to that in the Counter mode, with a particular increment function (denoted 32-bit increment) that generates the sequence of input counter blocks.

AES_IVRx registers keeping the **counter block** of data are used for processing each data block. The AES peripheral automatically increments the Counter[31:0] bitfield. The first counter block (CB1) is derived from the initial counter block ICB by the application software (see *Table 181*).

Table 181. GCM mode IVI bitfield initialization

Register	AES_IVR3[31:0]	AES_IVR2[31:0]	AES_IVR1[31:0]	AES_IVR0[31:0]
Input data	ICB[31:0]	ICB[63:32]	ICB[95:64]	Counter[31:0] = 0x2

Note: In GCM mode, the settings 01 and 11 of the MODE[1:0] bitfield are forbidden.

The authentication mechanism in GCM mode is based on a hash function called **GF2mul** that performs multiplication by a fixed parameter, called hash subkey (H), within a binary Galois field.

A GCM message is processed through the following phases, further described in next subsections:

- **Init phase**: AES prepares the GCM hash subkey (H).
- **Header phase**: AES processes the additional authenticated data (AAD), with hash computation only.
- **Payload phase**: AES processes the plaintext (P) with hash computation, counter block encryption and data XOR-ing. It operates in a similar way for ciphertext (C).
- **Final phase**: AES generates the authenticated tag (T) using the last block of the message.

GCM init phase

During this first step, the GCM hash subkey (H) is calculated and saved internally, to be used for processing all the blocks. The recommended sequence is:

1. Ensure that AES is disabled (the EN bit of the AES_CR must be 0).
2. Select GCM chaining mode, by setting to 011 the CHMOD[2:0] bitfield of the AES_CR register, and set to 00 (no data swapping) the DATATYPE[1:0] bitfield.
3. Indicate the Init phase, by setting to 00 the GCMPH[1:0] bitfield of the AES_CR register.
4. Set the MODE[1:0] bitfield of the AES_CR register to 00 or 10.
5. Initialize the AES_KEYRx registers with a key, and initialize AES_IVRx registers with the information as defined in *Table 181*.
6. Start the calculation of the hash key, by setting to 1 the EN bit of the AES_CR register (EN is automatically reset when the calculation finishes).
7. Wait until the end of computation, indicated by the CCF flag of the AES_SR transiting to 1. Alternatively, use the corresponding interrupt.
8. Clear the CCF flag of the AES_SR register, by setting to 1 the CCFC bit of the AES_CR register, and optionally set the data type (1-, 8- or 16-bit) using the DATATYPE[1:0] bitfield.

GCM header phase

This phase coming after the GCM Init phase must be completed before the payload phase. The sequence to execute, identical for encryption and decryption, is:

1. Indicate the header phase, by setting to 01 the GCMPH[1:0] bitfield of the AES_CR register. Do not modify the MODE[1:0] bitfield as set in the Init phase.
2. Enable the AES peripheral by setting the EN bit of the AES_CR register.
3. If it is the last block and the AAD size in the block is inferior to 128 bits, pad the remainder of the block with zeros. Then append the data block into AES in one of ways described in *Section 28.4.4: AES procedure to perform a cipher operation on page 840*.
4. Repeat the step 3 until the last additional authenticated data block is processed.

Note: The header phase can be skipped if there is no AAD, that is, Len(A) = 0.

GCM payload phase

This phase, identical for encryption and decryption, is executed after the GCM header phase. During this phase, the encrypted/decrypted payload is stored in the AES_DOUTR register. The sequence to execute is:

1. If the header phase was skipped, enable the AES peripheral by setting the EN bit of the AES_CR register.
2. Indicate the payload phase, by setting to 10 the GCMPH[1:0] bitfield of the AES_CR register. Do not modify the MODE[1:0] bitfield as set in the Init phase.
3. If it is the last block and the plaintext (encryption) or ciphertext (decryption) size in the block is inferior to 128 bits, pad the remainder of the block with zeros.
4. Append the data block into AES in one of ways described in *Section 28.4.4: AES procedure to perform a cipher operation on page 840*, and read the result.
5. Repeat the previous step till the second-last plaintext block is encrypted or till the last block of ciphertext is decrypted. For the last block of plaintext (encryption only), execute the two previous steps. For the last block, discard the bits that are not part of the payload when the last block size is less than 16 bytes.

Note: The payload phase can be skipped if there is no payload data, that is, Len(C) = 0 (see GMAC mode).

GCM final phase

In this last phase, the AES peripheral generates the GCM authentication tag and stores it in the AES_DOUTR register. The sequence to execute is:

1. Indicate the final phase, by setting to 11 the GCMPH[1:0] bitfield of the AES_CR register. Select encrypt mode by setting to 00 the MODE[1:0] bitfield of the AES_CR register.
2. Compose the data of the block, by concatenating the AAD bit length and the payload bit length, as shown in *Table 180*. Write the block into the AES_DINR register.
3. Wait until the end of computation, indicated by the CCF flag of the AES_SR transiting to 1.
4. Get the GCM authentication tag, by reading the AES_DOUTR register four times.
5. Clear the CCF flag in the AES_SR register, by setting to 1 the CCFC bit of the AES_CR register.
6. Disable the AES peripheral, by clearing the bit EN of the AES_CR register. If it is an authenticated decryption, compare the generated tag with the expected tag passed with the message.

Note: In the final phase, data must be swapped according to the data type set in the DATATYPE[1:0] bitfield of the AES_CR register.

When transiting from the header or the payload phase to the final phase, the AES peripheral must not be disabled, otherwise the result is wrong.

Suspend/resume operations in GCM mode

To suspend the processing of a message, proceed as follows:

1. If DMA is used, stop the AES DMA transfers to the IN FIFO by clearing the DMAINEN bit of the AES_CR register. If DMA is not used, make sure that the current computation is completed, which is indicated by the CCF flag of the AES_SR register set to 1.
2. In the payload phase, if DMA is not used, read four times the AES_DOUTR register to save the last-processed block. If DMA is used, wait until the CCF flag is set in the AES_SR register then stop the DMA transfers from the OUT FIFO by clearing the DMAOUTEN bit of the AES_CR register.
3. Clear the CCF flag of the AES_SR register, by setting to 1 the CCFC bit of the AES_CR register. In the payload phase (encryption mode only), verify that the BUSY flag of the AES_SR register is cleared, to ensure that GF2mul hash function is completed.
4. Save the AES_SUSPxR registers in the memory, where x is from 0 to 7.
5. In the payload phase, save the AES_IVRx registers as, during the data processing, they changed from their initial values. In the header phase, this step is not required.
6. Disable the AES peripheral, by clearing the EN bit of the AES_CR register.
7. Save the current AES configuration in the memory, excluding the initialization vector registers AES_IVRx. Key registers do not need to be saved as the original key value is known by the application.
8. If DMA is used, save the DMA controller status (pointers for IN data transfers, number of remaining bytes, and so on). In the payload phase, pointers for OUT data transfers must also be saved.

To resume the processing of a message, proceed as follows:

1. If DMA is used, configure the DMA controller in order to complete the rest of the FIFO IN transfers. In the payload phase, the rest of the FIFO OUT transfers must also be configured in the DMA controller.
2. Ensure that the AES peripheral is disabled (the EN bit of the AES_CR register must be 0).
3. Write the suspend register values, previously saved in the memory, back into their corresponding AES_SUSPxR registers, where x is from 0 to 7.
4. In the payload phase, write the initialization vector register values, previously saved in the memory, back into their corresponding AES_IVRx registers. In the header phase, write initial setting values back into the AES_IVRx registers.
5. Restore the initial setting values in the AES_CR and AES_KEYRx registers.
6. Enable the AES peripheral by setting the EN bit of the AES_CR register.
7. If DMA is used, enable AES DMA requests by setting the DMAINEN bit (and DMAOUTEN bit if in payload phase) of the AES_CR register.

28.4.11 AES Galois message authentication code (GMAC)

Overview

The Galois message authentication code (GMAC) allows the authentication of a plaintext, generating the corresponding tag information (also known as message authentication code). It is based on GCM algorithm, as defined in NIST *Special Publication 800-38D, Recommendation for Block Cipher Modes of Operation - Galois/Counter Mode (GCM) and GMAC.*

A typical message construction for GMAC is given in *Figure 212*.

Figure 212. Message construction in GMAC mode

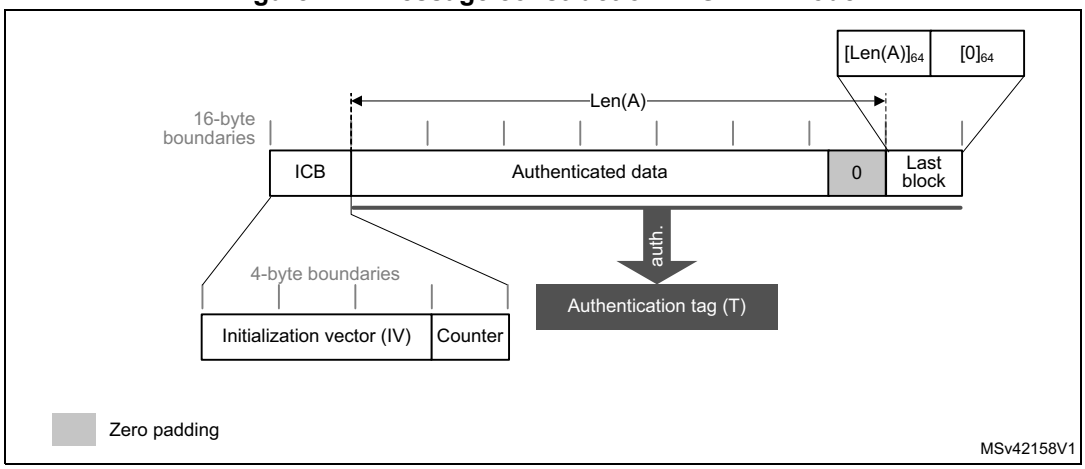

AES GMAC processing

Figure 213 describes the GMAC mode implementation in the AES peripheral. This mode is selected by writing 011 to the CHMOD[2:0] bitfield of the AES_CR register.

Figure 213. GMAC authentication mode

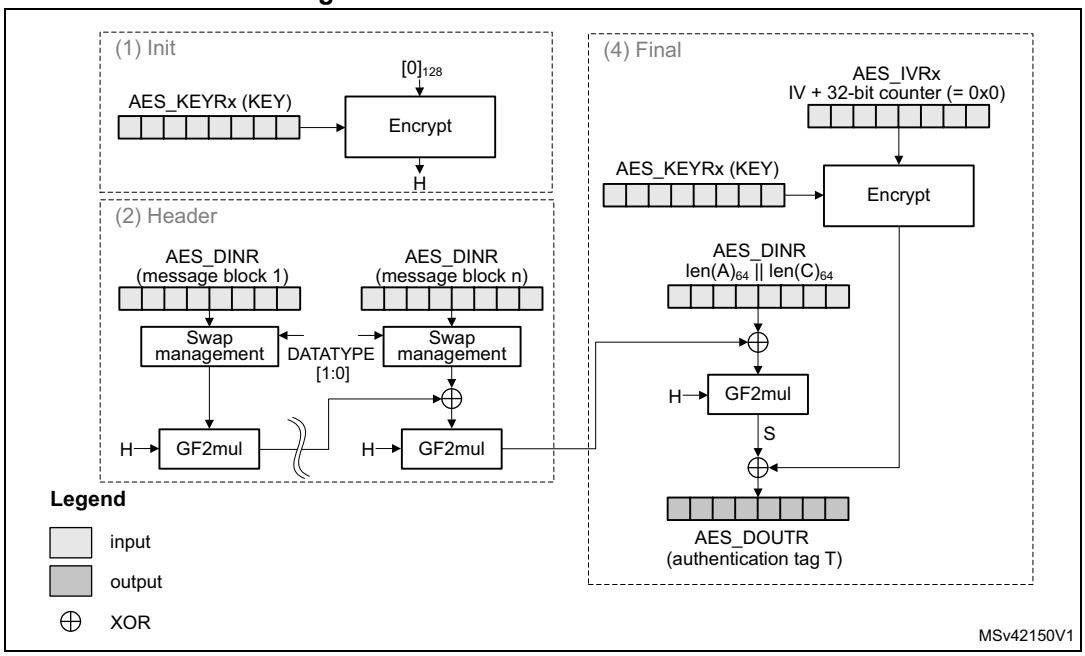

The GMAC algorithm corresponds to the GCM algorithm applied on a message only containing a header. As a consequence, all steps and settings are the same as with the GCM, except that the payload phase is omitted.

Suspend/resume operations in GMAC

In GMAC mode, the sequence described for the GCM applies except that only the header phase can be interrupted.

28.4.12 AES counter with CBC-MAC (CCM)

Overview

The AES **counter with cipher block chaining-message authentication code** (CCM) algorithm allows encryption and authentication of plaintext, generating the corresponding ciphertext and tag (also known as message authentication code). To ensure confidentiality, the CCM algorithm is based on AES in counter mode. It uses cipher block chaining technique to generate the message authentication code. This is commonly called CBC-MAC.

Note: NIST does not approve this CBC-MAC as an authentication mode outside the context of the CCM specification.

CCM chaining is specified in NIST *Special Publication 800-38C, Recommendation for Block Cipher Modes of Operation - The CCM Mode for Authentication and Confidentiality*. A typical message construction for CCM is given in *Figure 214*.

Figure 214. Message construction in CCM mode

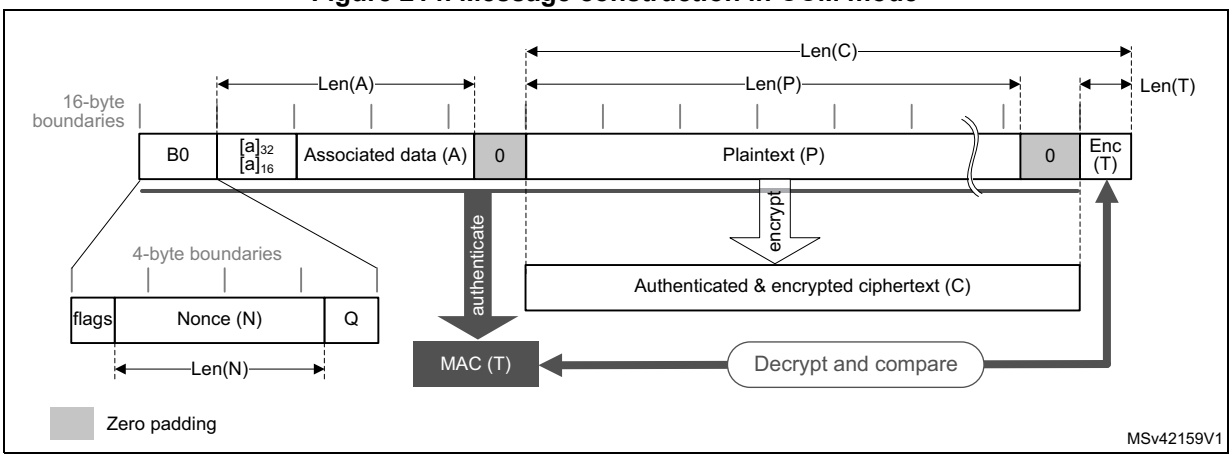

The structure of the message is:

- **16-byte first authentication block (B0)**, composed of three distinct fields:
  - **Q:** a bit string representation of the octet length of P (Len(P))
  - **Nonce (N):** a single-use value (that is, a new nonce should be assigned to each new communication) of Len(N) size. The sum Len(N) + Len(P) must be equal to 15 bytes.
  - **Flags:** most significant octet containing four flags for control information, as specified by the standard. It contains two 3-bit strings to encode the values **t** (MAC length expressed in bytes) and **Q** (plaintext length such that Len(P) < 2^{8q} bytes). The counter blocks range associated to **Q** is equal to 2^{8Q-4}, that is, if the maximum value of **Q** is 8, the counter blocks used in cipher shall be on 60 bits.
- **16-byte blocks (B)** associated to the Associated Data (A).
  This part of the message is only authenticated, not encrypted. This section has a known length Len(A) that can be a non-multiple of 16 bytes (see *Figure 214*). The

standard also states that, on MSB bits of the first message block (B1), the associated data length expressed in bytes (a) must be encoded as follows:

– If $0 < a < 2^{16} - 2^8$, then it is encoded as $[a]_{16}$, that is, on two bytes.
– If $2^{16} - 2^8 < a < 2^{32}$, then it is encoded as 0xff || 0xfe || $[a]_{32}$, that is, on six bytes.
– If $2^{32} < a < 2^{64}$, then it is encoded as 0xff || 0xff || $[a]_{64}$, that is, on ten bytes.

- **16-byte blocks (B)** associated to the plaintext message P, which is both authenticated and encrypted as ciphertext C, with a known length Len(P). This length can be a non-multiple of 16 bytes (see *Figure 214*).
- **Encrypted MAC (T)** of length Len(T) appended to the ciphertext C of overall length Len(C).

When a part of the message (A or P) has a length that is a non-multiple of 16-bytes, a special padding scheme is required.

Note: CCM chaining mode can also be used with associated data only (that is, no payload).

As an example, the C.1 section in NIST Special Publication 800-38C gives the following values (hexadecimal numbers):

`N: 10111213 141516` (Len(N)= 56 bits or 7 bytes)

`A: 00010203 04050607` (Len(A)= 64 bits or *8* bytes)

`P:` **`20212223`** (Len(P)= 32 bits or **4** bytes)

`T: 6084341B` (Len(T)= 32 bits or t = 4)

```
B0: 4F101112 13141516 00000000 00000004
B1: 00080001 02030405 06070000 00000000
B2: 20212223 00000000 00000000 00000000
CTR0: 07710111213 141516 00000000 00000000
CTR1: 07710111213 141516 00000000 00000001
```

Generation of formatted input data blocks Bx (especially B0 and B1) must be managed by the application.

CCM processing

Figure 215 describes the CCM implementation within the AES peripheral (decryption example).

Figure 215. CCM mode authenticated decryption

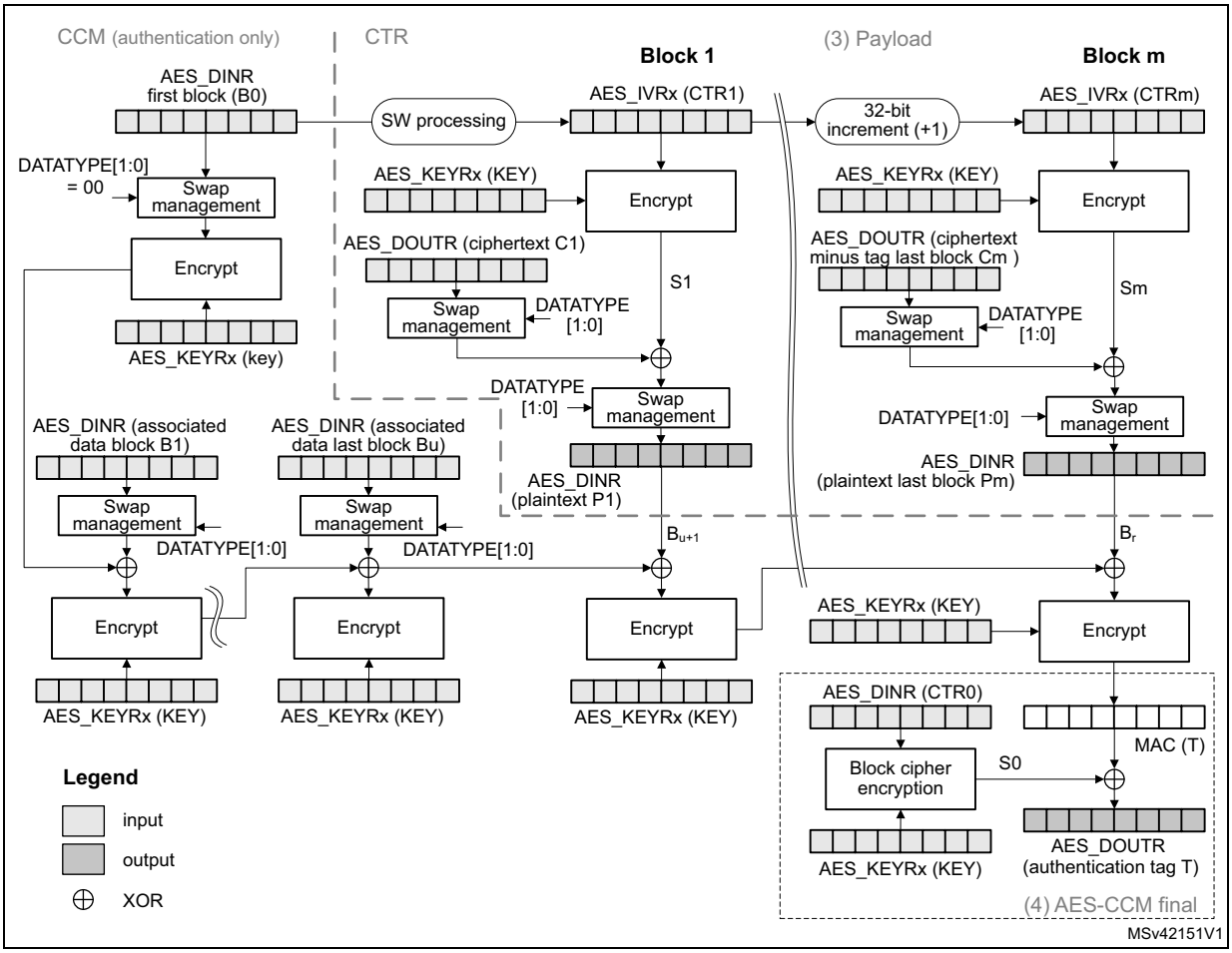

The data input to the generation-encryption process are a valid nonce, a valid payload string, and a valid associated data string, all properly formatted. The CBC chaining mechanism is applied to the formatted plaintext data to generate a MAC, with a known length. Counter mode encryption that requires a sufficiently long sequence of counter blocks as input, is applied to the payload string and separately to the MAC. The resulting ciphertext C is the output of the generation-encryption process on plaintext P.

AES_IVRx registers are used for processing each data block, AES automatically incrementing the CTR counter with a bit length defined by the first block B0. *Table 182* shows how the application must load the B0 data.

Table 182. Initialization of AES_IVRx registers in CCM mode

Register	AES_IVR3[31:0]	AES_IVR2[31:0]	AES_IVR1[31:0]	AES_IVR0[31:0]
Input data	B0[31:0]	B0[63:32]	B0[95:64]	B0[127:96]

A CCM message is processed through two distinct processes - first, **payload encryption or decryption,** in which the AES peripheral is configured in CTR mode, then **associated data and payload authentication,** in which the AES peripheral first executes the CCM header phase, then the CCM final phase.

Payload encryption/decryption

This step is performed independently of the tag computation. It uses standard CTR chaining mode. Refer to *Section 28.4.9: AES counter (CTR) mode* for details. The construction of the CTR1 initialization vector (see *Figure 215*) to load into AES_IVRx registers is defined in NIST Special Publication 800-38C.

Note: This phase can be skipped if there is no payload data, that is, when Len(P) = 0 or Len(C) = Len(T).

Remove $LSB_{Len(T)}(C)$ encrypted tag information when decrypting ciphertext C.

Associated data and payload authentication

In order to compute the CCM authentication tag associated with the plaintext message, it is recommended to execute the following header phase sequence:

1. Ensure that the AES peripheral is disabled (the EN bit of the AES_CR must be 0).
2. Select CCM chaining mode, by setting to 100 the CHMOD[2:0] bitfield of the AES_CR register, and optionally, set the DATATYPE[1:0] bitfield.
3. Indicate the header phase, by setting to 01 the GCMPH[1:0] bitfield of the AES_CR register. Select encrypt mode by setting to 00 the MODE[1:0] bitfield of the AES_CR register.
4. Initialize the AES_KEYRx registers with a key, and initialize AES_IVRx registers with zero values.
5. Enable the AES peripheral by setting the EN bit of the AES_CR register.
6. Write the AES_DINR register with B0, as shown in *Table 182*. B0 data must be swapped according to the DATATYPE[1:0] bitfield of the AES_CR register.
7. Wait until the end-of-computation flag CCF of the AES_SR register is set to 1.
8. Clear the CCF flag of the AES_SR register by setting the CCFC bit of the AES_CR register.
9. Process data block. If it is the last block of associated data or plaintext and data size in the block is inferior to 128 bits, pad the remainder of the block with zeros. Then append the data block into AES in one of ways described in *Section 28.4.4: AES procedure to perform a cipher operation on page 840*.
10. Repeat the previous step to process all data blocks, starting from the first block of associated data and ending with the last block of plaintext payload data.

In final phase, the AES peripheral generates the CCM authentication tag and stores it in the AES_DOUTR register:

11. Indicate the final phase, by setting to 11 the GCMPH[1:0] bitfield of the AES_CR register. Keep as-is the encryption mode in the MODE[1:0] bitfield.
12. Write four times the last data input into the AES_DIN register. This input must be the 128-bit value CTR0, formatted from the original B0 packet (that is, 5 flag bits set to 0, and Q length bits set to 0).
13. Wait until the end-of-computation flag CCF of the AES_SR register is set.
14. Read four times the AES_DOUTR register: the output corresponds to the encrypted CCM authentication tag.
15. Clear the CCF flag of the AES_SR register by setting the CCFC bit of the AES_CR register.
16. Disable the AES peripheral, by clearing the EN bit of the AES_CR register.
17. For authenticated decryption, compare the generated encrypted tag with the encrypted tag padded in the ciphertext.

Note: In this final phase, data must be swapped according to the DATATYPE[1:0] bitfield of the AES_CR register.

When transiting from the header phase to the final phase, the AES peripheral must not be disabled, otherwise the result is wrong.

Application must mask the authentication tag output with tag length to obtain a valid tag.

Suspend/resume operations in CCM mode

To suspend the authentication of the associated data and payload (GCMPH[1:0]= 01), proceed as follows. Suspending the message during the encryption/decryption phase is described in *Section 28.4.9: AES counter (CTR) mode on page 852*.

1. If DMA is used, stop the AES DMA transfers to the IN FIFO by clearing the DMAINEN bit of the AES_CR register. If DMA is not used, make sure that the current computation is completed, which is indicated by the CCF flag of the AES_SR register set to 1.
2. Clear the CCF flag of the AES_SR register, by setting to 1 the CCFC bit of the AES_CR register.
3. Save the AES_SUSPxR registers (where x is from 0 to 7) in the memory.
4. Save the AES_IVRx registers, as during the data processing they changed from their initial values.
5. Disable the AES peripheral, by clearing the bit EN of the AES_CR register.
6. Save the current AES configuration in the memory, excluding the initialization vector registers AES_IVRx. Key registers do not need to be saved as the original key value is known by the application.
7. If DMA is used, save the DMA controller status (pointers for IN data transfers, number of remaining bytes, and so on).

To resume the authentication of the associated data and payload (GCMPH[1:0]= 01 or 11), proceed as follows:

1. If DMA is used, configure the DMA controller in order to complete the rest of the FIFO IN transfers.
2. Ensure that AES processor is disabled (the EN bit of the AES_CR register must be 0).
3. Write the suspend register values, previously saved in the memory, back into their corresponding AES_SUSPxR registers (where x is from 0 to 7).
4. Write the initialization vector register values, previously saved in the memory, back into their corresponding AES_IVRx registers.
5. Restore the initial setting values in the AES_CR and AES_KEYRx registers.
6. Enable the AES peripheral by setting the EN bit of the AES_CR register.
7. If DMA is used, enable AES DMA requests by setting the DMAINEN bit of the AES_CR register.

Note: In CCM mode the MODE[1:0] bitfield settings 01 and 11 (key derivation) are forbidden.

28.4.13 .AES data registers and data swapping

Data input and output

A 128-bit data block is entered into the AES peripheral with four successive 32-bit word writes into the AES_DINR register (bitfield DIN[127:0]), the most significant word (bits [127:96]) first, the least significant word (bits [31:0]) last.

A 128-bit data block is retrieved from the AES peripheral with four successive 32-bit word reads from the AES_DOUTR register (bitfield DOUT[127:0]), the most significant word (bits [127:96]) first, the least significant word (bits [31:0]) last.

The 32-bit data word for AES_DINR register or from AES_DOUTR register is organized in big endian order, that is:

- the most significant byte of a word to write into AES_DINR must be put on the lowest address out of the four adjacent memory locations keeping the word to write, or
- the most significant byte of a word read from AES_DOUTR goes to the lowest address out of the four adjacent memory locations receiving the word

For using DMA for input data block write into AES, the four words of the input block must be stored in the memory consecutively and in big-endian order, that is, the most significant word on the lowest address. See *Section 28.4.16: AES DMA interface*.

Data swapping

The AES peripheral can be configured to perform a bit-, a byte-, a half-word-, or no swapping on the input data word in the AES_DINR register, before loading it to the AES processing core, and on the data output from the AES processing core, before sending it to the AES_DOUTR register. The choice depends on the type of data. For example, a byte swapping is used for an ASCII text stream.

The data swap type is selected through the DATATYPE[1:0] bitfield of the AES_CR register. The selection applies both to the input and the output of the AES core.

For different data swap types, *Figure 216* shows the construction of AES processing core input buffer data P127..0, from the input data entered through the AES_DINR register, or the construction of the output data available through the AES_DOUTR register, from the AES processing core output buffer data P127..0.

Figure 216. 128-bit block construction with respect to data swap

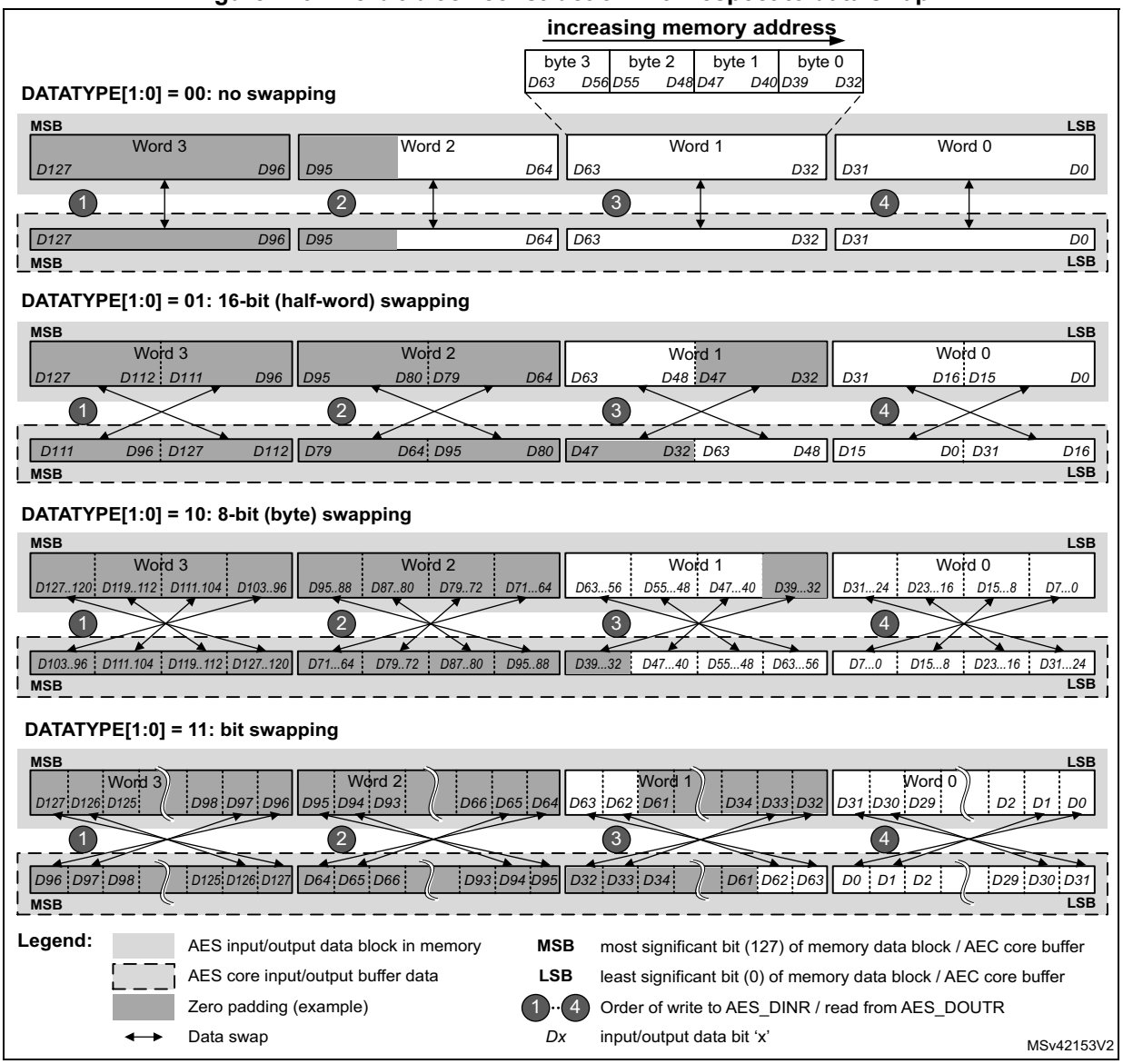

Note: The data in AES key registers (AES_KEYRx) and initialization registers (AES_IVRx) are not sensitive to the swap mode selection.

Data padding

Figure 216 also gives an example of memory data block padding with zeros such that the zeroed bits after the data swap form a contiguous zone at the MSB end of the AES core input buffer. The example shows the padding of an input data block containing:

- 48 message bits, with DATATYPE[1:0] = 01
- 56 message bits, with DATATYPE[1:0] = 10
- 34 message bits, with DATATYPE[1:0] = 11

28.4.14 AES key registers

The AES_KEYRx registers store the encryption or decryption key bitfield KEY[127:0] or KEY[255:0]. The data to write to or to read from each register is organized in the memory in little-endian order, that is, with most significant byte on the highest address.

The key is spread over the eight registers as shown in *Table 183*.

Table 183. Key endianness in AES_KEYRx registers (128- or 256-bit key length)

AES_KEYR7 [31:0]	AES_KEYR6 [31:0]	AES_KEYR5 [31:0]	AES_KEYR4 [31:0]	AES_KEYR3 [31:0]	AES_KEYR2 [31:0]	AES_KEYR1 [31:0]	AES_KEYR0 [31:0]
-	-	-	-	KEY[127:96]	KEY[95:64]	KEY[63:32]	KEY[31:0]
KEY[255:224]	KEY[223:192]	KEY[191:160]	KEY[159:128]	KEY[127:96]	KEY[95:64]	KEY[63:32]	KEY[31:0]

The key for encryption or decryption may be written into these registers when the AES peripheral is disabled.

The key registers are not affected by the data swapping controlled by DATATYPE[1:0] bitfield of the AES_CR register.

28.4.15 AES initialization vector registers

The four AES_IVRx registers keep the initialization vector input bitfield IVI[127:0]. The data to write to or to read from each register is organized in the memory in little-endian order, that is, with most significant byte on the highest address. The registers are also ordered from lowest address (AES_IVR0) to highest address (AES_IVR3).

The signification of data in the bitfield depends on the chaining mode selected. When used, the bitfield is updated upon each computation cycle of the AES core.

Write operations to the AES_IVRx registers when the AES peripheral is enabled have no effect to the register contents. For modifying the contents of the AES_IVRx registers, the EN bit of the AES_CR register must first be cleared.

Reading the AES_IVRx registers returns the latest counter value (useful for managing suspend mode).

The AES_IVRx registers are not affected by the data swapping feature controlled by the DATATYPE[1:0] bitfield of the CRYP_CR register.

28.4.16 AES DMA interface

The AES peripheral provides an interface to connect to the DMA (direct memory access) controller. The DMA operation is controlled through the AES_CR register.

Data input using DMA

Setting the DMAINEN bit of the AES_CR register enables DMA writing into AES. The AES peripheral then initiates a DMA request during the input phase each time it requires a word to be written to the AES_DINR register. It asserts four DMA requests to transfer one 128-bit (four-word) input data block from memory, as shown in *Figure 217*.

See *Table 184* for recommended DMA configuration.

Table 184. DMA channel configuration for memory-to-AES data transfer

DMA channel control register field	Recommended configuration
Transfer size	Message length: a multiple of 128 bits. According to the algorithm and the mode selected, special padding/ciphertext stealing might be required. Refer to *Section 28.4.6: AES ciphertext stealing and data padding on page 845* for details.
Source burst size (memory)	Single
Destination burst size (peripheral)	Single
DMA FIFO size	AES FIFO_size = 4 bytes.
Source transfer width (memory)	32-bit words
Destination transfer width (peripheral)	32-bit words
Source address increment (memory)	Yes, after each 32-bit transfer
Destination address increment (peripheral)	Fixed address of AES_DINR (no increment)

Figure 217. DMA transfer of a 128-bit data block during input phase

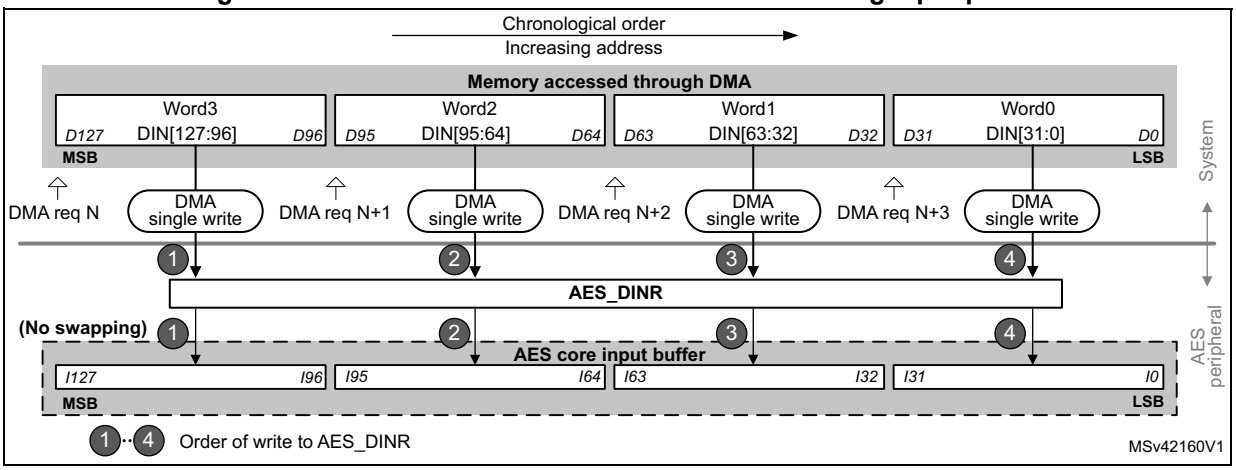

Data output using DMA

Setting the DMAOUTEN bit of the AES_CR register enables DMA reading from AES. The AES peripheral then initiates a DMA request during the Output phase each time it requires a word to be read from the AES_DOUTR register. It asserts four DMA requests to transfer one 128-bit (four-word) output data block to memory, as shown in *Figure 218*.

See *Table 185* for recommended DMA configuration.

Table 185. DMA channel configuration for AES-to-memory data transfer

DMA channel control register field	Recommended configuration
Transfer size	It is the message length multiple of AES block size (4 words). According to the case extra bytes will have to be discarded.
Source burst size (peripheral)	Single
Destination burst size (memory)	Single
DMA FIFIO size	AES FIFO_size = 4 bytes
Source transfer width (peripheral)	32-bit words
Destination transfer width (memory)	32-bit words
Source address increment (peripheral)	Fixed address of AES_DINR (no increment)
Destination address increment (memory)	Yes, after each 32-bit transfer

Figure 218. DMA transfer of a 128-bit data block during output phase

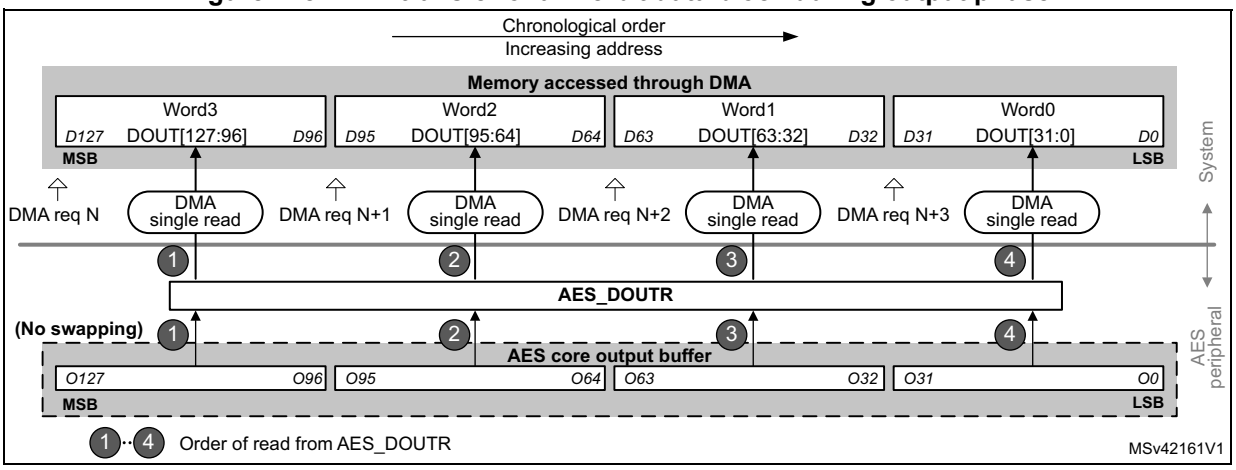

DMA operation in different operating modes

DMA operations are usable when Mode 1 (encryption) or Mode 3 (decryption) are selected via the MODE[1:0] bitfield of the register AES_CR. As in Mode 2 (key derivation) the AES_KEYRx registers must be written by software, enabling the DMA transfer through the DMAINEN and DMAOUTEN bits of the AES_CR register have no effect in that mode.

DMA single requests are generated by AES until it is disabled. So, after the data output phase at the end of processing of a 128-bit data block, AES switches automatically to a new data input phase for the next data block, if any.

When the data transferring between AES and memory is managed by DMA, the CCF flag is not relevant and can be ignored (left set) by software. It must only be cleared when

transiting back to data transferring managed by software. See *Suspend/resume operations in ECB/CBC modes* in *Section 28.4.8: AES basic chaining modes (ECB, CBC)* as example.

28.4.17 AES error management

The read error flag (RDERR) and write error flag (WRERR) of the AES_SR register are set when an unexpected read or write operation, respectively, is detected. An interrupt can be generated if the error interrupt enable (ERRIE) bit of the AES_CR register is set. For more details, refer to *Section 28.5: AES interrupts*.

Note: AES is not disabled after an error detection and continues processing.

AES can be re-initialized at any moment by clearing then setting the EN bit of the AES_CR register.

Read error flag (RDERR)

When an unexpected read operation is detected during the computation phase or during the input phase, the AES read error flag (RDERR) is set in the AES_SR register. An interrupt is generated if the ERRIE bit of the AES_CR register is set.

The RDERR flag is cleared by setting the corresponding ERRC bit of the AES_CR register.

Write error flag (WDERR)

When an unexpected write operation is detected during the computation phase or during the output phase, the AES write error flag (WRERR) is set in the AES_SR register. An interrupt is generated if the ERRIE bit of the AES_CR register is set.

The WDERR flag is cleared by setting the corresponding ERRC bit of the AES_CR register.

28.5 AES interrupts

There are three individual maskable interrupt sources generated by the AES peripheral, to signal the following events:

- computation completed
- read error, see *Section 28.4.17*
- write error, see *Section 28.4.17*

These three sources are combined into a common interrupt signal aes_it that connects to NVIC (nested vectored interrupt controller).

Figure 219. AES interrupt signal generation

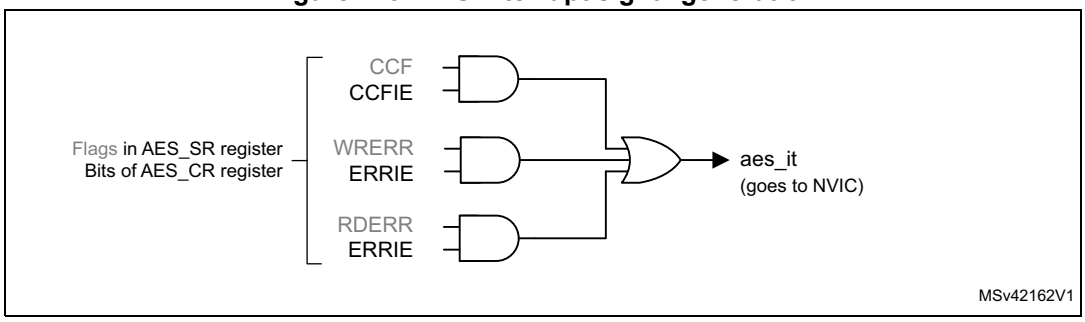

Each AES interrupt source can individually be enabled/disabled, by setting/clearing the corresponding enable bit of the AES_CR register. See *Figure 219*.

The status of the individual maskable interrupt sources can be read from the AES_SR register.

Table 186 gives a summary of the interrupt sources, their event flags and enable bits.

Table 186. AES interrupt requests

AES interrupt event	Event flag	Enable bit
computation completed flag	CCF	CCFIE
read error flag	RDERR	ERRIE
write error flag	WRERR	ERRIE

28.6 AES processing latency

The tables below summarize the latency to process a 128-bit block for each mode of operation.

Table 187. Processing latency (in clock cycle) for ECB, CBC and CTR

Key size	Mode of operation	Algorithm	Input phase	Computation phase	Output phase	Total
128-bit	Mode 1: Encryption	ECB, CBC, CTR	8	202	4	**214**
	Mode 2: Key derivation	-	-	80	-	**80**
	Mode 3: Decryption	ECB, CBC, CTR	8	202	4	**214**
	Mode 4: Key derivation then decryption	ECB, CBC	8	276	4	**288**
256-bit	Mode 1: Encryption	ECB, CBC, CTR	8	286	4	**298**
	Mode 2: Key derivation	-	-	109	-	**109**
	Mode 3: Decryption	ECB, CBC, CTR	8	286	4	**298**
	Mode 4: Key derivation then decryption	ECB, CBC	8	380	4	**392**

Table 188. Processing latency for GCM and CCM (in clock cycle)

Key size	Mode of operation	Algorithm	Init Phase	Header phase	Payload phase	Tag phase
128-bit	Mode 1: Encryption/ Mode 3: Decryption	GCM	215	67	202	202
	-	CCM authentication	-	206	-	202
256-bit	Mode 1: Encryption/ Mode 3: Decryption	GCM	299	67	286	286
	-	CCM authentication	-	290	-	286

Note: Data insertion can include wait states forced by AES on the AHB bus (maximum 3 cycles, typical 1 cycle). This applies to all header/payload/tag phases.

28.7 AES registers

28.7.1 AES control register (AES_CR)

Address offset: 0x00

Reset value: 0x0000 0000

31	30	29	28	27	26	25	24	23	22	21	20	19	18	17	16
Res.	Res.	Res.	Res.	Res.	Res.	Res.	Res.	Res.	Res.	Res.	Res.	Res.	KEYSIZE	Res.	CHMOD[2]
													rw		rw

15	14	13	12	11	10	9	8	7	6	5	4	3	2	1	0
Res.	GCMPH[1:0]		DMAOUTEN	DMAINEN	ERRIE	CCFIE	ERRC	CCFC	CHMOD[1:0]		MODE[1:0]		DATATYPE[1:0]		EN
	rw	rw	rw	rw	rw	rw	rw	rw	rw	rw	rw	rw	rw	rw	rw

Bits 31:19 Reserved, must be kept at zero

Bit 18 **KEYSIZE:** Key size selection

This bitfield defines the length of the key used in the AES cryptographic core, in bits:
0: 128
1: 256

The bit value change is allowed only when AES is disabled, so as to avoid an unpredictable behavior.

Bit 17 Reserved, must be kept at zero

Bit 16 **CHMOD[2]**: Chaining mode selection, bit [2]

Refer to the bits [5:6] of the register for the description of the CHMOD[2:0] bitfield

Bit 15 Reserved, must be kept at zero

Bits 14:13 **GCMPH[1:0]:** GCM or CCM phase selection

This bitfield selects the phase of GCM, GMAC or CCM algorithm:
00: Init phase
01: Header phase
10: Payload phase
11: Final phase

The bitfield has no effect if other than GCM, GMAC or CCM algorithms are selected (through the ALGOMODE bitfield).

Bit 12 **DMAOUTEN**: DMA output enable

This bit enables/disables data transferring with DMA, in the output phase:
0: Disable
1: Enable

When the bit is set, DMA requests are automatically generated by AES during the output data phase. This feature is only effective when Mode 1 or Mode 3 is selected through the MODE[1:0] bitfield. It is not effective for Mode 2 (key derivation).
Usage of DMA with Mode 4 (single decryption) is not recommended.

Bit 11 **DMAINEN**: DMA input enable

This bit enables/disables data transferring with DMA, in the input phase:
0: Disable
1: Enable

When the bit is set, DMA requests are automatically generated by AES during the input data phase. This feature is only effective when Mode 1 or Mode 3 is selected through the MODE[1:0] bitfield. It is not effective for Mode 2 (key derivation).
Usage of DMA with Mode 4 (single decryption) is not recommended.

Bit 10 **ERRIE**: Error interrupt enable

This bit enables or disables (masks) the AES interrupt generation when RDERR and/or WRERR is set:
0: Disable (mask)
1: Enable

Bit 9 **CCFIE**: CCF interrupt enable

This bit enables or disables (masks) the AES interrupt generation when CCF (computation complete flag) is set:
0: Disable (mask)
1: Enable

Bit 8 **ERRC**: Error flag clear

Upon written to 1, this bit clears the RDERR and WRERR error flags in the AES_SR register:
0: No effect
1: Clear RDERR and WRERR flags

Reading the flag always returns zero.

Bit 7 **CCFC**: Computation complete flag clear

Upon written to 1, this bit clears the computation complete flag (CCF) in the AES_SR register:
0: No effect
1: Clear CCF

Reading the flag always returns zero.

Bits 6:5 **CHMOD[1:0]**: Chaining mode selection, bits [1:0]

These bits, together with the bit CHMOD[2] (see bit 16 of this register), form CHMOD[2:0] bitfield that selects the AES chaining mode:

000: Electronic codebook (ECB)
001: Cipher-Block Chaining (CBC)
010: Counter Mode (CTR)
011: Galois Counter Mode (GCM) and Galois Message Authentication Code (GMAC)
100: Counter with CBC-MAC (CCM)
>100: Reserved

The bitfield value change is allowed only when AES is disabled, so as to avoid an unpredictable behavior.

Bits 4:3 **MODE[1:0]**: AES operating mode

This bitfield selects the AES operating mode:
00: Mode 1: encryption
01: Mode 2: key derivation (or key preparation for ECB/CBC decryption)
10: Mode 3: decryption
11: Mode 4: key derivation then single decryption

The bitfield value change is allowed only when AES is disabled, so as to avoid an unpredictable behavior. Any attempt to selecting Mode 4 while either ECB or CBC chaining mode is not selected, defaults to effective selection of Mode 3. It is not possible to select a Mode 3 following a Mode 4.

Bits 2:1 **DATATYPE[1:0]**: Data type selection

This bitfield defines the format of data written in the AES_DINR register or read from the AES_DOUTR register, through selecting the mode of data swapping:
00: None
01: Half-word (16-bit)
10: Byte (8-bit)
11: Bit

For more details, refer to *Section 28.4.13: .AES data registers and data swapping*.
The bitfield value change is allowed only when AES is disabled, so as to avoid an unpredictable behavior.

Bit 0 **EN**: AES enable

This bit enables/disables the AES peripheral:
0: Disable
1: Enable

At any moment, clearing then setting the bit re-initializes the AES peripheral.
This bit is automatically cleared by hardware when the key preparation process ends (Mode 2).

28.7.2 AES status register (AES_SR)

Address offset: 0x04

Reset value: 0x0000 0000

31	30	29	28	27	26	25	24	23	22	21	20	19	18	17	16
Res.	Res.	Res.	Res.	Res.	Res.	Res.	Res.	Res.	Res.	Res.	Res.	Res.	Res.	Res.	Res.
r	r	r	r	r	r	r	r	r	r	r	r	r	r	r	r
15	14	13	12	11	10	9	8	7	6	5	4	3	2	1	0
Res.	Res.	Res.	Res.	Res.	Res.	Res.	Res.	Res.	Res.	Res.	Res.	BUSY	WRERR	RDERR	CCF
r	r	r	r	r	r	r	r	r	r	r	r	r	r	r	r

Bits 31:4 Reserved, must be kept at zero

Bit 3 **BUSY:** Busy

This flag indicates whether AES is idle or busy during GCM payload **encryption** phase:
0: Idle
1: Busy

The flag is controlled by hardware. When the flag indicates “idle”, the current message processing may be suspended to process a higher-priority message.
This flag is effective only in GCM payload encryption phase. in other chaining modes, or in GCM phases other than payload encryption, the flag must be ignored.

Bit 2 **WRERR**: Write error

This flag indicates the detection of an unexpected write operation to the AES_DINR register (during computation or data output phase):
0: Not detected
1: Detected

The flag is set by hardware. It is cleared by software upon setting the ERRC bit of the AES_CR register.
Upon the flag setting, an interrupt is generated if enabled through the ERRIE bit of the AES_CR register.
The flag setting has no impact on the AES operation.
The flag is not effective when key derivation mode, or GCM/CCM Init phase is selected.

Bit 1 **RDERR**: Read error flag

This flag indicates the detection of an unexpected read operation from the AES_DOUTR register (during computation or data input phase):
0: Not detected
1: Detected

The flag is set by hardware. It is cleared by software upon setting the ERRC bit of the AES_CR register.
Upon the flag setting, an interrupt is generated if enabled through the ERRIE bit of the AES_CR register.
The flag setting has no impact on the AES operation.
The flag is not effective when key derivation mode, nor GCM/CCM init/header phase is selected.

Bit 0 **CCF**: Computation completed flag

This flag indicates whether the computation is completed:
0: Not completed
1: Completed

The flag is set by hardware upon the completion of the computation. It is cleared by software, upon setting the CCFC bit of the AES_CR register.
Upon the flag setting, an interrupt is generated if enabled through the CCFIE bit of the AES_CR register.
The flag is significant only when the DMAOUTEN bit is 0. It may stay high when DMA_EN is 1.

28.7.3 AES data input register (AES_DINR)

Address offset: 0x08

Reset value: 0x0000 0000

Only 32-bit access type is supported.

31	30	29	28	27	26	25	24	23	22	21	20	19	18	17	16
DIN[x+31:x+16]															
rw	rw	rw	rw	rw	rw	rw	rw	rw	rw	rw	rw	rw	rw	rw	rw
15	14	13	12	11	10	9	8	7	6	5	4	3	2	1	0
DIN[x+15:x]															
rw	rw	rw	rw	rw	rw	rw	rw	rw	rw	rw	rw	rw	rw	rw	rw

Bits 31:0 **DIN[x+31:x]**: One of four 32-bit words of a 128-bit input data block being written into the peripheral

This bitfield feeds a 32-bit input buffer. A 4-fold sequential write to this bitfield during the input phase virtually writes a complete 128-bit block of input data to the AES peripheral. Upon each write, the data from the input buffer are handled by the data swap block according to the DATATYPE[1:0] bitfield, then written into the AES core 128-bit input buffer.

The substitution for “x”, from the first to the fourth write operation, is: 96, 64, 32, and 0. In other words, data from the first to the fourth write operation are: DIN[127:96], DIN[95:64], DIN[63:32], and DIN[31:0].

The data signification of the input data block depends on the AES operating mode:

- **Mode 1** (encryption): plaintext
- **Mode 2** (key derivation): the bitfield is not used (AES_KEYRx registers used for input)
- **Mode 3** (decryption) and **Mode 4** (key derivation then single decryption): ciphertext

The data swap operation is described in *Section 28.4.13: .AES data registers and data swapping on page 866*.

28.7.4 AES data output register (AES_DOUTR)

Address offset: 0x0C

Reset value: 0x0000 0000

Only 32-bit access type is supported.

31	30	29	28	27	26	25	24	23	22	21	20	19	18	17	16
DOUT[x+31:x+16]															
r	r	r	r	r	r	r	r	r	r	r	r	r	r	r	r
15	14	13	12	11	10	9	8	7	6	5	4	3	2	1	0
DOUT[x+15:0]															
r	r	r	r	r	r	r	r	r	r	r	r	r	r	r	r

Bits 31:0 **DOUT[x+31:x]**: One of four 32-bit words of a 128-bit output data block being read from the peripheral

This bitfield fetches a 32-bit output buffer. A 4-fold sequential read of this bitfield, upon the computation completion (CCF set), virtually reads a complete 128-bit block of output data from the AES peripheral. Before reaching the output buffer, the data produced by the AES core are handled by the data swap block according to the DATATYPE[1:0] bitfield.

The substitution for DOUT[x+31:x], from the first to the fourth read operation, is: 96, 64, 32, and 0. In other words, data from the first to the fourth read operation are: DOUT[127:96], DOUT[95:64], DOUT[63:32], and DOUT[31:0].

The data signification of the output data block depends on the AES operating mode:

- **Mode 1** (encryption): ciphertext
- **Mode 2** (key derivation): the bitfield is not used (AES_KEYRx registers used for output).
- **Mode 3** (decryption) and **Mode 4** (key derivation then single decryption): plaintext

The data swap operation is described in *Section 28.4.13: .AES data registers and data swapping on page 866*.

28.7.5 AES key register 0 (AES_KEYR0)

Address offset: 0x10

Reset value: 0x0000 0000

31	30	29	28	27	26	25	24	23	22	21	20	19	18	17	16
KEY[31:16]															
rw	rw	rw	rw	rw	rw	rw	rw	rw	rw	rw	rw	rw	rw	rw	rw
15	14	13	12	11	10	9	8	7	6	5	4	3	2	1	0
KEY[15:0]															
rw	rw	rw	rw	rw	rw	rw	rw	rw	rw	rw	rw	rw	rw	rw	rw

Bits 31:0 **KEY[31:0]**: Cryptographic key, bits [31:0]

This bitfield contains the bits [31:0] of the AES encryption or decryption key, depending on the operating mode:

- In **Mode 1** (encryption), **Mode 2** (key derivation) and **Mode 4** (key derivation then single decryption): the value to write into the bitfield is the encryption key.
- In **Mode 3** (decryption): the value to write into the bitfield is the encryption key to be derived before being used for decryption. After writing the encryption key into the bitfield, its reading before enabling AES returns the same value. Its reading after enabling AES and after the CCF flag is set returns the decryption key derived from the encryption key.

Note: In mode 4 (key derivation then decryption) the bitfield always contains the encryption key.

The AES_KEYRx registers may be written only when the AES peripheral is disabled.

Refer to *Section 28.4.14: AES key registers on page 868* for more details.

28.7.6 AES key register 1 (AES_KEYR1)

Address offset: 0x14

Reset value: 0x0000 0000

31	30	29	28	27	26	25	24	23	22	21	20	19	18	17	16
KEY[63:48]															
rw	rw	rw	rw	rw	rw	rw	rw	rw	rw	rw	rw	rw	rw	rw	rw
15	14	13	12	11	10	9	8	7	6	5	4	3	2	1	0
KEY[47:32]															
rw	rw	rw	rw	rw	rw	rw	rw	rw	rw	rw	rw	rw	rw	rw	rw

Bits 31:0 **KEY[63:32]**: Cryptographic key, bits [63:32]

Refer to the AES_KEYR0 register for description of the KEY[255:0] bitfield.

28.7.7 AES key register 2 (AES_KEYR2)

Address offset: 0x18

Reset value: 0x0000 0000

31	30	29	28	27	26	25	24	23	22	21	20	19	18	17	16
KEY[95:80]															
rw	rw	rw	rw	rw	rw	rw	rw	rw	rw	rw	rw	rw	rw	rw	rw
15	14	13	12	11	10	9	8	7	6	5	4	3	2	1	0
KEY[79:64]															
rw	rw	rw	rw	rw	rw	rw	rw	rw	rw	rw	rw	rw	rw	rw	rw

Bits 31:0 **KEY[95:64]**: Cryptographic key, bits [95:64]
Refer to the AES_KEYR0 register for description of the KEY[255:0] bitfield.

28.7.8 AES key register 3 (AES_KEYR3)

Address offset: 0x1C

Reset value: 0x0000 0000

31	30	29	28	27	26	25	24	23	22	21	20	19	18	17	16
KEY[127:112]															
rw	rw	rw	rw	rw	rw	rw	rw	rw	rw	rw	rw	rw	rw	rw	rw
15	14	13	12	11	10	9	8	7	6	5	4	3	2	1	0
KEY[111:96]															
rw	rw	rw	rw	rw	rw	rw	rw	rw	rw	rw	rw	rw	rw	rw	rw

Bits 31:0 **KEY[127:96]**: Cryptographic key, bits [127:96]
Refer to the AES_KEYR0 register for description of the KEY[255:0] bitfield.

28.7.9 AES initialization vector register 0 (AES_IVR0)

Address offset: 0x20

Reset value: 0x0000 0000

31	30	29	28	27	26	25	24	23	22	21	20	19	18	17	16
IVI[31:16]															
rw	rw	rw	rw	rw	rw	rw	rw	rw	rw	rw	rw	rw	rw	rw	rw
15	14	13	12	11	10	9	8	7	6	5	4	3	2	1	0
IVI[15:0]															
rw	rw	rw	rw	rw	rw	rw	rw	rw	rw	rw	rw	rw	rw	rw	rw

Bits 31:0 **IVI[31:0]**: Initialization vector input, bits [31:0]
Refer to *Section 28.4.15: AES initialization vector registers on page 868* for description of the IVI[127:0] bitfield.
The initialization vector is only used in chaining modes other than ECB.
The initialization vector may be written only when the AES peripheral is disabled.

28.7.10 AES initialization vector register 1 (AES_IVR1)

Address offset: 0x24

Reset value: 0x0000 0000

31	30	29	28	27	26	25	24	23	22	21	20	19	18	17	16
IVI[63:48]															
rw	rw	rw	rw	rw	rw	rw	rw	rw	rw	rw	rw	rw	rw	rw	rw
15	14	13	12	11	10	9	8	7	6	5	4	3	2	1	0
IVI[47:32]															
rw	rw	rw	rw	rw	rw	rw	rw	rw	rw	rw	rw	rw	rw	rw	rw

Bits 31:0 **IVI[63:32]**: Initialization vector input, bits [63:32]

Refer to *Section 28.4.15: AES initialization vector registers on page 868* for description of the IVI[127:0] bitfield.

The initialization vector is only used in chaining modes other than ECB.

The initialization vector may be written only when the AES peripheral is disabled.

28.7.11 AES initialization vector register 2 (AES_IVR2)

Address offset: 0x28

Reset value: 0x0000 0000

31	30	29	28	27	26	25	24	23	22	21	20	19	18	17	16
IVI[95:80]															
rw	rw	rw	rw	rw	rw	rw	rw	rw	rw	rw	rw	rw	rw	rw	rw
15	14	13	12	11	10	9	8	7	6	5	4	3	2	1	0
IVI[79:64]															
rw	rw	rw	rw	rw	rw	rw	rw	rw	rw	rw	rw	rw	rw	rw	rw

Bits 31:0 **IVI[95:64]**: Initialization vector input, bits [95:64]

Refer to *Section 28.4.15: AES initialization vector registers on page 868* for description of the IVI[127:0] bitfield.

The initialization vector is only used in chaining modes other than ECB.

The initialization vector may be written only when the AES peripheral is disabled.

28.7.12 AES initialization vector register 3 (AES_IVR3)

Address offset: 0x2C

Reset value: 0x0000 0000

31	30	29	28	27	26	25	24	23	22	21	20	19	18	17	16
IVI[127:112]															
rw	rw	rw	rw	rw	rw	rw	rw	rw	rw	rw	rw	rw	rw	rw	rw
15	14	13	12	11	10	9	8	7	6	5	4	3	2	1	0
IVI[111:96]															
rw	rw	rw	rw	rw	rw	rw	rw	rw	rw	rw	rw	rw	rw	rw	rw

Bits 31:0 **IVI[127:96]**: Initialization vector input, bits [127:96]

Refer to *Section 28.4.15: AES initialization vector registers on page 868* for description of the IVI[127:0] bitfield.

The initialization vector is only used in chaining modes other than ECB.

The initialization vector may be written only when the AES peripheral is disabled.

28.7.13 AES key register 4 (AES_KEYR4)

Address offset: 0x30

Reset value: 0x0000 0000

31	30	29	28	27	26	25	24	23	22	21	20	19	18	17	16
KEY[159:144]															
rw	rw	rw	rw	rw	rw	rw	rw	rw	rw	rw	rw	rw	rw	rw	rw
15	14	13	12	11	10	9	8	7	6	5	4	3	2	1	0
KEY[143:128]															
rw	rw	rw	rw	rw	rw	rw	rw	rw	rw	rw	rw	rw	rw	rw	rw

Bits 31:0 **KEY[159:128]**: Cryptographic key, bits [159:128]

Refer to the AES_KEYR0 register for description of the KEY[255:0] bitfield.

28.7.14 AES key register 5 (AES_KEYR5)

Address offset: 0x34

Reset value: 0x0000 0000

31	30	29	28	27	26	25	24	23	22	21	20	19	18	17	16
KEY[191:176]															
rw	rw	rw	rw	rw	rw	rw	rw	rw	rw	rw	rw	rw	rw	rw	rw
15	14	13	12	11	10	9	8	7	6	5	4	3	2	1	0
KEY[175:160]															
rw	rw	rw	rw	rw	rw	rw	rw	rw	rw	rw	rw	rw	rw	rw	rw

Bits 31:0 **KEY[191:160]**: Cryptographic key, bits [191:160]

Refer to the AES_KEYR0 register for description of the KEY[255:0] bitfield.

28.7.15 AES key register 6 (AES_KEYR6)

Address offset: 0x38

Reset value: 0x0000 0000

31	30	29	28	27	26	25	24	23	22	21	20	19	18	17	16
KEY[223:208]															
rw	rw	rw	rw	rw	rw	rw	rw	rw	rw	rw	rw	rw	rw	rw	rw
15	14	13	12	11	10	9	8	7	6	5	4	3	2	1	0
KEY[207:192]															
rw	rw	rw	rw	rw	rw	rw	rw	rw	rw	rw	rw	rw	rw	rw	rw

Bits 31:0 **KEY[223:192]**: Cryptographic key, bits [223:192]
Refer to the AES_KEYR0 register for description of the KEY[255:0] bitfield.

28.7.16 AES key register 7 (AES_KEYR7)

Address offset: 0x3C

Reset value: 0x0000 0000

31	30	29	28	27	26	25	24	23	22	21	20	19	18	17	16
KEY[255:240]															
rw	rw	rw	rw	rw	rw	rw	rw	rw	rw	rw	rw	rw	rw	rw	rw
15	14	13	12	11	10	9	8	7	6	5	4	3	2	1	0
KEY[239:224]															
rw	rw	rw	rw	rw	rw	rw	rw	rw	rw	rw	rw	rw	rw	rw	rw

Bits 31:0 **KEY[255:224]**: Cryptographic key, bits [255:224]
Refer to the AES_KEYR0 register for description of the KEY[255:0] bitfield.

Note: The key registers from 4 to 7 are used only when the key length of 256 bits is selected. They have no effect when the key length of 128 bits is selected (only key registers 0 to 3 are used in that case).

28.7.17 AES suspend registers (AES_SUSPxR)

Address offset: 0x040 + x * 0x4, (x = 0 to 7)

Reset value: 0x0000 0000

These registers contain the complete internal register states of the AES processor when the AES processing of the current task is suspended to process a higher-priority task.

Upon suspend, the software reads and saves the AES_SUSPxR register contents (where x is from 0 to 7) into memory, before using the AES processor for the higher-priority task. Upon completion, the software restores the saved contents back into the corresponding suspend registers, before resuming the original task.

Note: These registers are used only when GCM, GMAC, or CCM *chaining mode is selected.*

These registers can be read only when AES is enabled. Reading these registers while AES is disabled returns 0x0000 0000.

31	30	29	28	27	26	25	24	23	22	21	20	19	18	17	16
SUSPx															
rw	rw	rw	rw	rw	rw	rw	rw	rw	rw	rw	rw	rw	rw	rw	rw
15	14	13	12	11	10	9	8	7	6	5	4	3	2	1	0
SUSPx															
rw	rw	rw	rw	rw	rw	rw	rw	rw	rw	rw	rw	rw	rw	rw	rw

Bits 31:0 **SUSPx**: AES suspend
Upon suspend operation, this bitfield of every AES_SUSPxR register takes the value of one of internal AES registers.

28.7.18 AES register map

Table 189. AES register map and reset values

Offset	Register	31	30	29	28	27	26	25	24	23	22	21	20	19	18	17	16	15	14	13	12	11	10	9	8	7	6	5	4	3	2	1	0
0x0000	AES_CR	Res.	Res.	Res.	Res.	Res.	Res.	Res.	Res.	Res.	Res.	Res.	Res.	Res.	KEYSIZE	Res.	CHMOD[2]	Res.	GCMPH[1:0]		DMAOUTEN	DMAINEN	ERRIE	CCFIE	ERRC	CCFC	CHMOD[1:0]		MODE[1:0]		DATATYPE[1:0]		EN
	Reset value														0		0		0	0	0	0	0	0	0	0	0	0	0	0	0	0	0
0x0004	AES_SR	Res.	Res.	Res.	Res.	Res.	Res.	Res.	Res.	Res.	Res.	Res.	Res.	Res.	Res.	Res.	Res.	Res.	Res.	Res.	Res.	Res.	Res.	Res.	Res.	Res.	Res.	Res.	Res.	BUSY	WRERR	RDERR	CCF
	Reset value																													0	0	0	0
0x0008	AES_DINR x=96,64,32,0	DIN[x+31:x]																															
	Reset value	0	0	0	0	0	0	0	0	0	0	0	0	0	0	0	0	0	0	0	0	0	0	0	0	0	0	0	0	0	0	0	0
0x000C	AES_DOUTR x=96,64,32,0	DOUT[x+31:x]																															
	Reset value	0	0	0	0	0	0	0	0	0	0	0	0	0	0	0	0	0	0	0	0	0	0	0	0	0	0	0	0	0	0	0	0
0x0010	AES_KEYR0	KEY[31:0]																															
	Reset value	0	0	0	0	0	0	0	0	0	0	0	0	0	0	0	0	0	0	0	0	0	0	0	0	0	0	0	0	0	0	0	0
0x0014	AES_KEYR1	KEY[63:32]																															
	Reset value	0	0	0	0	0	0	0	0	0	0	0	0	0	0	0	0	0	0	0	0	0	0	0	0	0	0	0	0	0	0	0	0
0x0018	AES_KEYR2	KEY[95:64]																															
	Reset value	0	0	0	0	0	0	0	0	0	0	0	0	0	0	0	0	0	0	0	0	0	0	0	0	0	0	0	0	0	0	0	0
0x001C	AES_KEYR3	KEY[127:96]																															
	Reset value	0	0	0	0	0	0	0	0	0	0	0	0	0	0	0	0	0	0	0	0	0	0	0	0	0	0	0	0	0	0	0	0
0x0020	AES_IVR0	IVI[31:0]																															
	Reset value	0	0	0	0	0	0	0	0	0	0	0	0	0	0	0	0	0	0	0	0	0	0	0	0	0	0	0	0	0	0	0	0
0x0024	AES_IVR1	IVI[63:32]																															
	Reset value	0	0	0	0	0	0	0	0	0	0	0	0	0	0	0	0	0	0	0	0	0	0	0	0	0	0	0	0	0	0	0	0
0x0028	AES_IVR2	IVI[95:64]																															
	Reset value	0	0	0	0	0	0	0	0	0	0	0	0	0	0	0	0	0	0	0	0	0	0	0	0	0	0	0	0	0	0	0	0
0x002C	AES_IVR3	IVI[127:96]																															
	Reset value	0	0	0	0	0	0	0	0	0	0	0	0	0	0	0	0	0	0	0	0	0	0	0	0	0	0	0	0	0	0	0	0
0x0030	AES_KEYR4	KEY[159:128]																															
	Reset value	0	0	0	0	0	0	0	0	0	0	0	0	0	0	0	0	0	0	0	0	0	0	0	0	0	0	0	0	0	0	0	0
0x0034	AES_KEYR5	KEY[191:160]																															
	Reset value	0	0	0	0	0	0	0	0	0	0	0	0	0	0	0	0	0	0	0	0	0	0	0	0	0	0	0	0	0	0	0	0
0x0038	AES_KEYR6	KEY[223:192]																															
	Reset value	0	0	0	0	0	0	0	0	0	0	0	0	0	0	0	0	0	0	0	0	0	0	0	0	0	0	0	0	0	0	0	0

Table 189. AES register map and reset values (continued)

Offset	Register	31	30	29	28	27	26	25	24	23	22	21	20	19	18	17	16	15	14	13	12	11	10	9	8	7	6	5	4	3	2	1	0
0x003C	AES_KEYR7	KEY[255:224]																															
	Reset value	0	0	0	0	0	0	0	0	0	0	0	0	0	0	0	0	0	0	0	0	0	0	0	0	0	0	0	0	0	0	0	0
0x0040	AES_SUSP0R	SUSP0[31:0]																															
	Reset value	0	0	0	0	0	0	0	0	0	0	0	0	0	0	0	0	0	0	0	0	0	0	0	0	0	0	0	0	0	0	0	0
0x0044	AES_SUSP1R	SUSP1[31:0]																															
	Reset value	0	0	0	0	0	0	0	0	0	0	0	0	0	0	0	0	0	0	0	0	0	0	0	0	0	0	0	0	0	0	0	0
0x0048	AES_SUSP2R	SUSP2[31:0]																															
	Reset value	0	0	0	0	0	0	0	0	0	0	0	0	0	0	0	0	0	0	0	0	0	0	0	0	0	0	0	0	0	0	0	0
0x004C	AES_SUSP3R	SUSP3[31:0]																															
	Reset value	0	0	0	0	0	0	0	0	0	0	0	0	0	0	0	0	0	0	0	0	0	0	0	0	0	0	0	0	0	0	0	0
0x0050	AES_SUSP4R	SUSP4[31:0]																															
	Reset value	0	0	0	0	0	0	0	0	0	0	0	0	0	0	0	0	0	0	0	0	0	0	0	0	0	0	0	0	0	0	0	0
0x0054	AES_SUSP5R	SUSP5[31:0]																															
	Reset value	0	0	0	0	0	0	0	0	0	0	0	0	0	0	0	0	0	0	0	0	0	0	0	0	0	0	0	0	0	0	0	0
0x0058	AES_SUSP6R	SUSP6[31:0]																															
	Reset value	0	0	0	0	0	0	0	0	0	0	0	0	0	0	0	0	0	0	0	0	0	0	0	0	0	0	0	0	0	0	0	0
0x005C	AES_SUSP7R	SUSP7[31:0]																															
	Reset value	0	0	0	0	0	0	0	0	0	0	0	0	0	0	0	0	0	0	0	0	0	0	0	0	0	0	0	0	0	0	0	0

Refer to *Section 2.2 on page 75* for the register boundary addresses.

29 Hash processor (HASH)

This section applies to STM32L49x/L4Ax devices only.

29.1 Introduction

The hash processor is a fully compliant implementation of the secure hash algorithm (SHA-1, SHA-224, SHA-256), the MD5 (message-digest algorithm 5) hash algorithm and the HMAC (keyed-hash message authentication code) algorithm. HMAC is suitable for applications requiring message authentication.

The hash processor computes FIPS (Federal Information Processing Standards) approved digests of length of 160, 224, 256 bits, for messages of up to (2^{64} – 1) bits. It also computes 128-bit digests for the MD5 algorithm.

29.2 HASH main features

- Suitable for data authentication applications, compliant with:
  - Federal Information Processing Standards Publication FIPS PUB 180-4, *Secure Hash Standard* (SHA-1 and SHA-2 family)
  - Federal Information Processing Standards Publication FIPS PUB 186-4, *Digital Signature Standard (DSS)*
  - Internet Engineering Task Force (IETF) Request For Comments RFC 1321, *MD5 Message-Digest Algorithm*
  - Internet Engineering Task Force (IETF) Request For Comments RFC 2104, *HMAC: Keyed-Hashing for Message Authentication* and Federal Information Processing Standards Publication FIPS PUB 198-1, *The Keyed-Hash Message Authentication Code (HMAC)*
- Fast computation of SHA-1, SHA-224, SHA-256, and MD5
  - 82 (respectively 66) clock cycles for processing one 512-bit block of data using SHA-1 (respectively SHA-256) algorithm
  - 66 clock cycles for processing one 512-bit block of data using MD5 algorithm
- Corresponding 32-bit words of the digest from consecutive message blocks are added to each other to form the digest of the whole message
  - Automatic 32-bit words swapping to comply with the internal little-endian representation of the input bit-string
  - Word swapping supported: bits, bytes, half-words and 32-bit words
- Automatic padding to complete the input bit string to fit digest minimum block size of 512 bits (16 × 32 bits)
- Single 32-bit input register associated to an internal input FIFO, corresponding to one block size
- AHB slave peripheral, accessible through 32-bit word accesses only (else an AHB error is generated)
- 8 × 32-bit words (H0 to H7) for output message digest
- Automatic data flow control with support of direct memory access (DMA) using one channel.

- Only single DMA transfers are supported
- Interruptible message digest computation, on a per-block basis
  - Re-loadable digest registers
  - Hashing computation suspend/resume mechanism, including DMA

29.3 HASH implementation

The devices have a single instance of HASH peripheral.

29.4 HASH functional description

29.4.1 HASH block diagram

Figure 220 shows the block diagram of the hash processor.

Figure 220. HASH block diagram

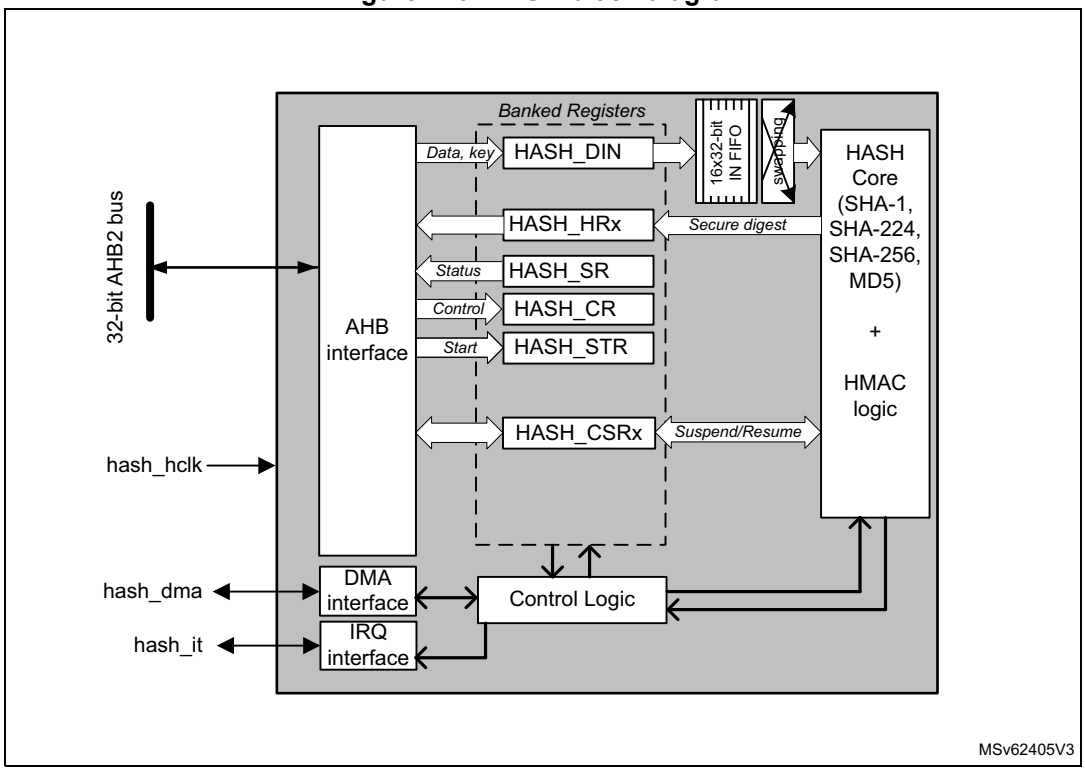

29.4.2 HASH internal signals

Table 190 describes a list of useful to know internal signals available at HASH level, not at product level (on pads).

Table 190. HASH internal input/output signals

Signal name	Signal type	Description
hash_hclk	digital input	AHB bus clock
hash_it	digital output	Hash processor global interrupt request
hash_dma	digital input/output	DMA transfer request/ acknowledge

29.4.3 About secure hash algorithms

The hash processor is a fully compliant implementation of the secure hash algorithm defined by FIPS PUB 180-4 standard and the IETF RFC1321 publication (MD5).

With each algorithm, the HASH computes a condensed representation of a message or data file. More specifically, when a message of any length below 2^{64} bits is provided on input, the HASH processing core produces respectively a fixed-length output string called a message digest, defined as follows:

- For MD5 digest size is 128-bit
- For SHA-1 digest size is 160-bit
- For SHA-224 and SHA-256, the digest size is 224 bits and 256 bits, respectively

The message digest can then be processed with a digital signature algorithm in order to generate or verify the signature for the message.

Signing the message digest rather than the message often improves the efficiency of the process because the message digest is usually much smaller in size than the message. The verifier of a digital signature has to use the same hash algorithm as the one used by the creator of the digital signature.

The SHA-2 functions supported by the hash processor are qualified as “secure” by NIST because it is computationally infeasible to find a message that corresponds to a given message digest, or to find two different messages that produce the same message digest (SHA-1 does not qualify as secure since February 2017). Any change to a message in transit will, with very high probability, result in a different message digest, and the signature will fail to verify.

29.4.4 Message data feeding

The message (or data file) to be processed by the HASH should be considered as a bit string. Per FIPS PUB 180-4 standard this message bit string grows from left to right, with hexadecimal words expressed in “big-endian” convention, so that within each word, the most significant bit is stored in the left-most bit position. For example message string “abc” with a bit string representation of “`01100001 01100010 01100011`” is represented by a 32-bit word `0x00636261`, and 8-bit words `0x61626300`.

Data are entered into the HASH one 32-bit word at a time, by writing them into the HASH_DIN register. The current contents of the HASH_DIN register are transferred to the 16 words input FIFO each time the register is written with new data. Hence HASH_DIN and the FIFO form a seventeen 32-bit words length FIFO (named the IN buffer).

In accordance to the kind of data to be processed (e.g. byte swapping when data are ASCII text stream) there must be a bit, byte, half-word or no swapping operation to be performed on data from the input FIFO before entering the little-endian hash processing core. *Figure 221* shows how the hash processing core 32-bit data block M0...31 is constructed from one 32-bit words popped into input FIFO by the driver, according to the DATATYPE bitfield in the HASH control register (HASH_CR).

HASH_DIN data endianness when bit swapping is disabled (DATATYPE=00) can be described as following: the least significant bit of the message has to be at MSB position in the first word entered into the hash processor, the 32nd bit of the bit string has to be at MSB position in the second word entered into the hash processor and so on.

Figure 221. Message data swapping feature

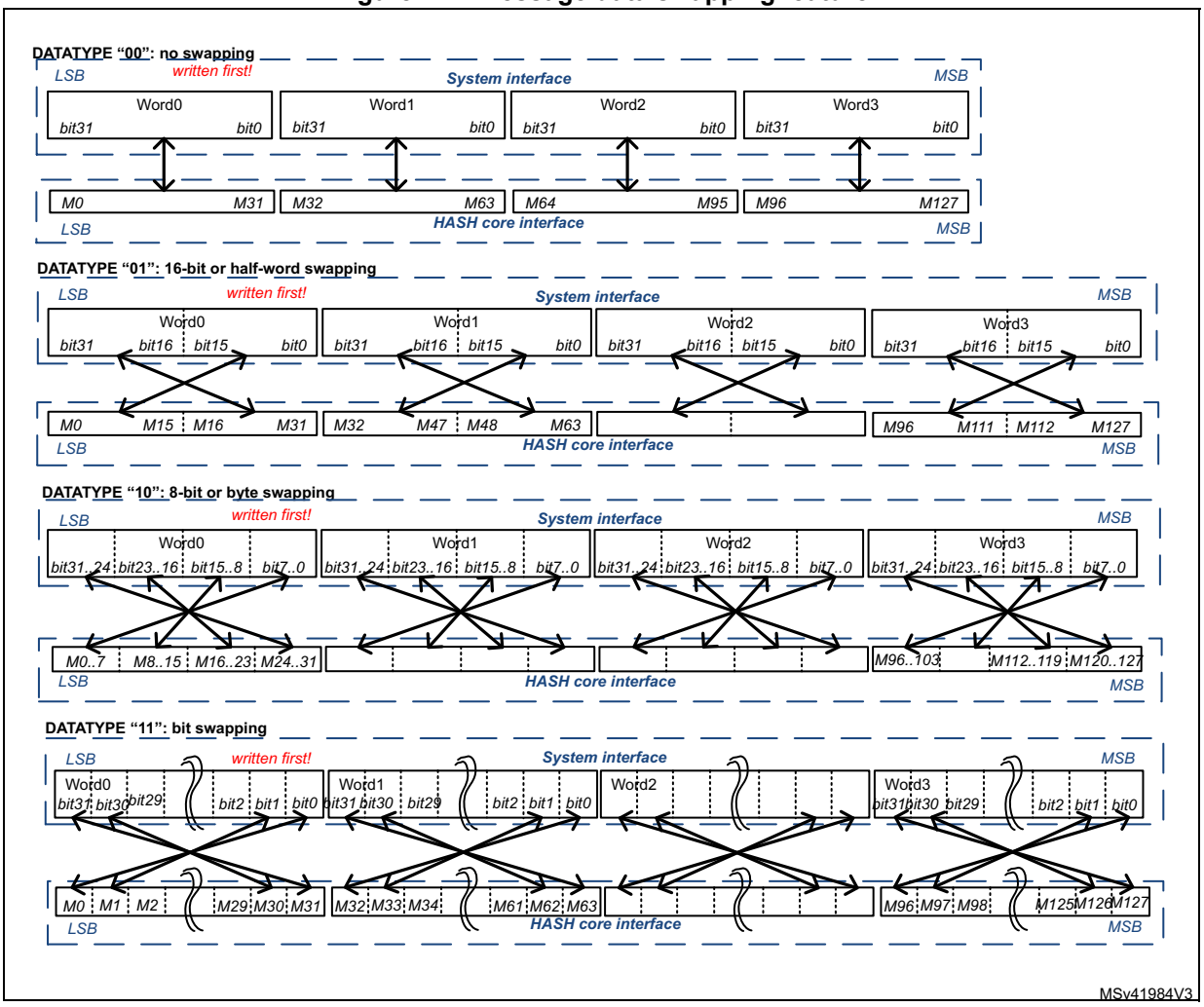

29.4.5 Message digest computing

The hash processor sequentially processes several blocks when computing the message digest. For MD5, SHA1 and SHA2, the block size is 512 bits.

Each time the DMA or the CPU writes a block to the hash processor, the HASH automatically starts computing the message digest. This operation is known as partial digest computation.

As described in *Section 29.4.4: Message data feeding*, the message to be processed is entered into the HASH 32-bit word at a time, writing to the HASH_DIN register to fill the input FIFO.

In order to perform the hash computation on this data below sequence shall be used by the application:

1. Initialize the hash processor using the HASH_CR register:
   a) Select the right algorithm using ALGO field. If needed program the correct swapping operation on the message input words using DATATYPE bitfield in HASH_CR.
   b) Set MODE=1 and select the key length using LKEY if HMAC mode has been selected.
   c) Update NBLW to define the number of valid bits in last word if it is different from 32 bits. If it is the case automatic padding is applied by the hash processor.
2. Complete the initialization by setting to 1 the INIT bit in HASH_CR. Also set the bit DMAE to 1 if data are transferred via DMA.

Caution: When programming step 2, it is important to set up before or at the same time the correct configuration values (ALGO, DATATYPE, HMAC mode, key length, NBLW).

3. Start filling data by writing to HASH_DIN register, unless data are automatically: transferred via DMA. Note that the processing of a block can start only once the last value of the block has entered the input FIFO. The way the partial or final digest computation is managed depends on the way data are fed into the processor:
   a) When data are filled by software:
   – The partial digest computation is triggered when the application writes the first word of the next block. Once the processor is ready again (DINIS=1 in HASH_SR), the software can write new data to HASH_DIN. This mechanism avoids the introduction of wait states by the HASH.
   – The final digest computation is triggered when the last block is entered and the software writes the DCAL bit to 1. If the message length is not an exact multiple of the block size, the NBLW field in HASH_STR register must be written prior to writing DCAL bit (see *Section 29.4.6* for details).
   b) When data are filled by DMA as a single DMA transfer (MDMAT bit=0):
   – The partial digest computation is triggered automatically each time the FIFO is full.
   – The final digest computation is triggered automatically when the last block has been transferred to the HASH_DIN register (DCAL bit is set to 1 by hardware). If the message length is not an exact multiple of the block size, the NBLW field in HASH_STR register must be written prior to enabling the DMA (see *Section 29.4.6* for details).
   c) When data are filled using multiple DMA transfers (MDMAT bit=1) (no MDMA):
   – The partial digest computations are triggered as for single DMA transfers. However the final digest computation is not triggered automatically when the last

block has been transferred to the HASH_DIN register (DCAL bit is not set to 1 by hardware). It allows the hash processor to receive a new DMA transfer as part of this digest computation. To launch the final digest computation, the software must set MDMAT bit to 0 before the last DMA transfer in order to trigger the final digest computation as it is done for single DMA transfers (see description before).

4. Once the digest computation is complete (DCIS= 1), the resulting digest can be read from the output registers as described in *Table 191*.

Table 191. Hash processor outputs

Algorithm	Valid output registers	Most significant bit	Digest size (in bits)
MD5	HASH_H0 to HASH_H3	HASH_H0[31]	128
SHA-1	HASH_H0 to HASH_H4	HASH_H0[31]	160
SHA-224	HASH_H0 to HASH_H6	HASH_H0[31]	224
SHA-256	HASH_H0 to HASH_H7		256

For more information about HMAC detailed instructions, refer to *Section 29.4.7: HMAC operation*.

29.4.6 Message padding

Overview

When computing a condensed representation of a message, the process of feeding data into the hash processor (with automatic partial digest computation every block transfer) loops until the last bits of the original message are written to the HASH_DIN register.

As the length (number of bits) of a message can be any integer value, the last word written to the hash processor may have a valid number of bits between 1 and 32. This number of valid bits in the last word, NBLW, has to be written to the HASH_STR register, so that message padding is correctly performed before the final message digest computation.

Padding processing

Detailed padding sequences with DMA enabled or disabled are described in *Section 29.4.5: Message digest computing*.

Padding example

As specified by Federal Information Processing Standards PUB 180-4, the message padding consists in appending a “1” followed by k “0”s, itself followed by a 64-bit integer that is equal to the length L in bits of the message. These three padding operations generate a padded message of length $L + 1 + k + 64$, which by construction is a multiple of 512 bits.

For the hash processor, the “1” is added to the last word written to the HASH_DIN register at the bit position defined by the NBLW bitfield, and the remaining upper bits are cleared (“0”s).

Example from FIPS PUB180-4

Let us assume that the original message is the ASCII binary-coded form of “abc”, of length L = 24:

```
byte 0    byte 1   byte 2   byte 3
01100001 01100010 01100011 UUUUUUUU
<-- 1st word written to HASH_DIN -->
```

NBLW has to be loaded with the value 24: a **“1”** is appended at bit location 24 in the bit string (starting counting from left to right in the above bit string), which corresponds to bit 31 in the HASH_DIN register (little-endian convention):

```
01100001 01100010 01100011 1UUUUUUU
```

Since L = 24, the number of bits in the above bit string is 25, and 423 “0” bits are appended, making now 448 bits.

This gives in hexadecimal (byte words in big-endian format):

```
61626380 00000000 00000000 00000000
00000000 00000000 00000000 00000000
00000000 00000000 00000000 00000000
00000000 00000000 00000000 00000018
```

The message length value, L, in two-word format (that is 00000000 00000018) is appended. Hence the final padded message in hexadecimal (byte words in big-endian format):

```
61626380 00000000 00000000 00000000
00000000 00000000 00000000 00000000
00000000 00000000 00000000 00000000
00000000 00000000 00000000 00000018
```

If the hash processor is programmed to swap byte within HASH_DIN input register (DATATYPE=10 in HASH_CR), the above message has to be entered by following the below sequence:

1. `0xUU636261` is written to the HASH_DIN register (where ‘U’ means don’t care).
2. `0x18` is written to the HASH_STR register (the number of valid bits in the last word written to the HASH_DIN register is 24, as the original message length is 24 bits).
3. `0x10` is written to the HASH_STR register to start the message padding (described above) and then perform the digest computation.
4. The hash computing is complete with the message digest available in the HASH_HRx registers (x = 0...4) for the SHA-1 algorithm. For this FIPS example, the expected value is as follows:

```
HASH_HR0 = 0xA9993E36
HASH_HR1 = 0x4706816A
HASH_HR2 = 0xBA3E2571
HASH_HR3 = 0x7850C26C
HASH_HR4 = 0x9CD0D89D
```

29.4.7 HMAC operation

Overview

As specified by Internet Engineering Task Force RFC2104 and NIST FIPS PUB 198-1, the HMAC algorithm is used for message authentication by irreversibly binding the message being processed to a key chosen by the user. The algorithm consists of two nested hash operations:

```
HMAC(message)= Hash((Key | pad) XOR opad |
                Hash((Key | pad) XOR ipad | message))
```

where:

- `opad`= $[0x5C]_n$ (outer pad) and `ipad`= $[0x36]_n$ (inner pad)
- $[X]_n$ represents a repetition of X *n* times, where *n* equal to the size of the underlying hash function data block (n = 64 for 512-bit blocks).
- `pad` is a sequence of zeroes needed to extend the key to the length *n* defined above. If the key length is greater than *n,* the application shall first hash the key using Hash() function and then use the resultant byte string as the actual key to HMAC.
- | represents the concatenation operator.

HMAC processing

Four different steps are required to compute the HMAC:

1. The block is initialized by writing the INIT bit to 1 with the MODE bit at 1 and the ALGO bits set to the value corresponding to the desired algorithm. The LKEY bit must also be set to 1 if the key being used is longer than 64 bytes. In this case, as required by HMAC specifications, the hash processor will use the hash of the key instead of the real key.
2. The key to be used for the inner hash function must be provided to the hash processor. The key loading operation follows the same mechanism as the message bit string loading, i.e. write key data into HASH_DIN and complete the transfer by writing to HASH_STR register.

Note: Endianness details can be found in Section 29.4.4: Message data feeding.

3. Once the last key word has been entered and computation has started, the hash processor elaborates the inner key material. Once this operation has completed, it is ready to accept the message bit string as described in *Section 29.4.4: Message data feeding*.
4. After the final hash round, the hash processor returns “ready” to indicate that it is ready to receive the key to be used for the outer hash function (normally, this key is the same as the one used for the inner hash function). When the last word of the key is entered and the computation has started, the HMAC result can be found in the HASH_HR0 to HASH_HR7 registers as soon as DCIS =1.

Note: The computation latency of the HMAC primitive depends on the lengths of the keys and message, as described in Section 29.6: HASH processing time.

HMAC example

Below is an example of HMAC SHA-1 algorithm (ALGO=00 and MODE=1 in HASH_CR) as specified by NIST.

Let us assume that the original message is the ASCII binary-coded form of “`Sample message for keylen=blocklen`”, of length L = 34 bytes. If the HASH is programmed in

no swapping mode (DATATYPE=00 in HASH_CR), the following data must be loaded sequentially into HASH_DIN register:

1. **Inner hash key** input (lenght=64, i.e. no padding), specified by NIST. As key lenght=64, LKEY bit is set to 0 in HASH_CR register

```
00010203 04050607 08090A0B 0C0D0E0F 10111213 14151617
18191A1B 1C1D1E1F 20212223 24252627 28292A2B 2C2D2E2F
30313233 34353637 38393A3B 3C3D3E3F
```

2. **Message** input (lenght=34, i.e. padding required). HASH_STR must be set to `0x20` to start message padding and inner hash computation (see 'U' as don't care)

```
53616D70 6C65206D 65737361 67652066 6F72206B 65796C65
6E3D626C 6F636B6C 656EUUUU
```

3. **Outer hash key** input (lenght=64, i.e. no padding). A key identical to the inner hash key is entered here.
4. **Final outer hash computing** is then performed by the HASH. The HMAC-SHA1 digest result is available in the HASH_HRx registers (x = 0 to 4), as shown below:

```
HASH_HR0 = 0x5FD596EE
HASH_HR1 = 0x78D5553C
HASH_HR2 = 0x8FF4E72D
HASH_HR3 = 0x266DFD19
HASH_HR4 = 0x2366DA29
```

29.4.8 HASH suspend/resume operations

Overview

It is possible to interrupt a hash/HMAC operation to perform another processing with a higher priority. The interrupted process completes later when the higher-priority task has been processed, as shown in *Figure 222*.

Figure 222. HASH suspend/resume mechanism

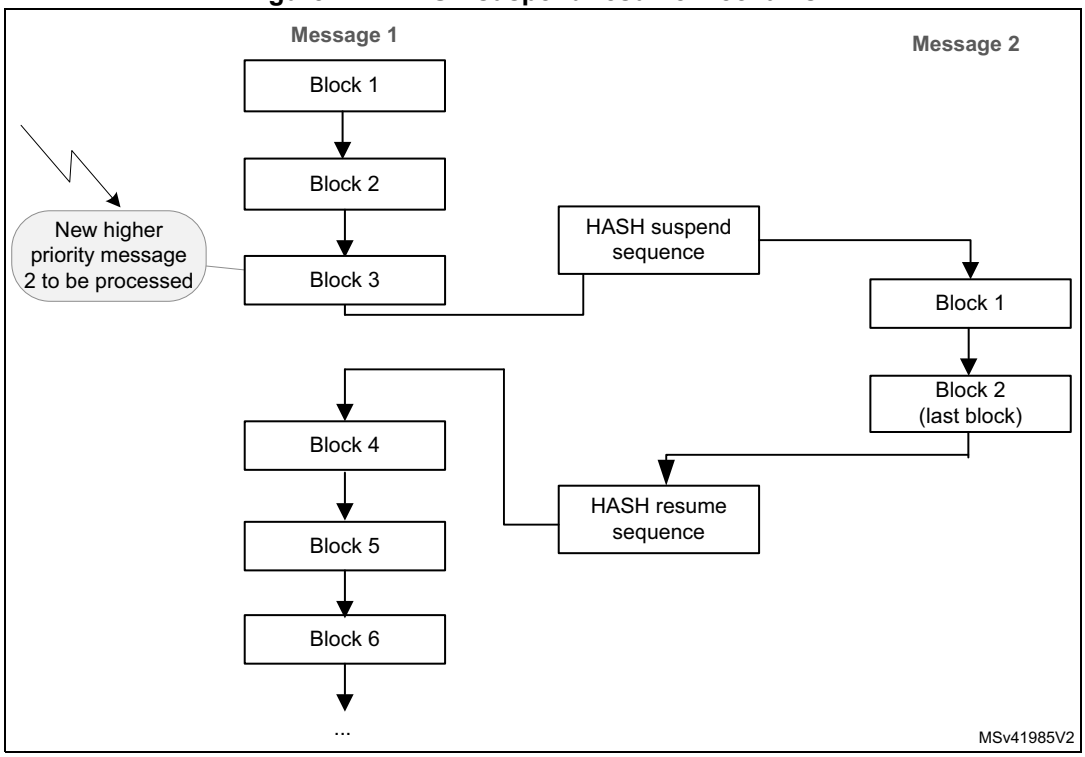

To do so, the context of the interrupted task must be saved from the HASH registers to memory, and then be restored from memory to the HASH registers.

The procedures where the data flow is controlled by software or by DMA are described below.

Data loaded by software

When the DMA is not used to load the message into the hash processor, the context can be saved only when no block processing is ongoing.

To suspend the processing of a message, proceed as follows after writing 16 words 32-bit (plus one if it is the first block):

1. In Polling mode, wait for BUSY = 0, then poll if the DINIS status bit is set to 1.

   In Interrupt mode, implement the next step in DINIS interrupt handler (recommended).
2. Store the contents of the following registers into memory:
   - HASH_IMR
   - HASH_STR
   - HASH_CR
   - HASH_CSR0 to HASH_CSR37. HASH_CSR38 to HASH_CSR53 registers must also be saved if an HMAC operation was ongoing.

To resume the processing of a message, proceed as follows:

1. Write the following registers with the values saved in memory: HASH_IMR, HASH_STR and HASH_CR.
2. Initialize the hash processor by setting the INIT bit in the HASH_CR register.
3. Write the HASH_CSRx registers with the values saved in memory.
4. Restart the processing from the point where it has been interrupted.

Note: To optimize the resume process when NBW[3:0]=0x0, HASH_CSR22 to HASH_CSR37 registers do not need to be saved then restored as the FIFO is empty.

Data loaded by DMA

When the DMA is used to load the message into the hash processor, it is recommended to suspend and then restore a secure digest computing is described below.

To suspend the processing of a message using DMA, proceed as follows:

1. In Polling mode, wait for BUSY = 0. If DCIS is set in HASH_SR, the hash result is available and the context swapping is useless. Else go to step 2.
2. In Polling mode, wait for BUSY = 1.
3. Disable the DMA channel. Then clear DMAE bit in HASH_CR register.
4. In Polling mode, wait for BUSY = 0. If DCIS is set in HASH_SR, the hash result is available and the context swapping is useless. Else go to step 5.
5. Save HASH_IMR, HASH_STR, HASH_CR, and HASH_CSR0 to HASH_CSR37 registers. HASH_CSR38 to HASH_CSR53 registers must also be saved if an HMAC operation was ongoing.

To resume the processing of a message using DMA, proceed as follows:

1. Reconfigure the DMA controller so that it proceeds with the transfer of the message up to the end if it is not interrupted again. Do not forget to take into account the words that have been already pushed into the FIFO if NBW[3:0] is higher than 0x0.
1. Program the values saved in memory to HASH_IMR, HASH_STR and HASH_CR registers.
2. Initialize the hash processor by setting the INIT bit in the HASH_CR register.
3. Program the values saved in memory to the HASH_CSRx registers.
4. Restart the processing from the point where it was interrupted by setting the DMAE bit.

Note: To optimize the resume process when NBW[3:0]=0x0, HASH_CSR22 to HASH_CSR37 registers do not need to be saved then restored as the FIFO is empty.

29.4.9 HASH DMA interface

The HASH only supports single DMA transfers.

The hash processor provides an interface to connect to the DMA controller. This DMA can be used to write data to the HASH by setting the DMAE bit in the HASH_CR register. When this bit is set, the HASH initiates a DMA request each time a block has to be written to the HASH_DIN register.

Once four 32-bit words have been received, the HASH automatically triggers a new request to the DMA. For more information refer to *Section 29.4.5: Message digest computing*.

Before starting the DMA transfer, the software must program the number of valid bits in the last word that will be copied into HASH_DIN register. This is done by writing in HASH_STR register the following value:

`NBLW = Len(Message)% 32` where "`x%32`" gives the remainder of x divided by 32.

The DMAS bit of the HASH_SR register provides information on the DMA interface activity. This bit is set with DMAE and cleared when DMAE is cleared and no DMA transfer is ongoing.

Note: No interrupt is associated to DMAS bit.

When MDMAT is set, the size of the transfer must be a multiple of four words.

29.4.10 HASH error management

No error flags are generated by the hash processor.

29.5 HASH interrupts

Two individual maskable interrupt sources are generated by the hash processor to signal the following events:

- Digest calculation completion (DCIS)
- Data input buffer ready (DINIS)

Both interrupt sources are connected to the same global interrupt request signal (hash_it), which is in turn connected to the NVIC (nested vectored interrupt controller). Each interrupt source can individually be enabled or disabled by changing the mask bits in the HASH_IMR register. Setting the appropriate mask bit to 1 enables the interrupt.

The status of each maskable interrupt source can be read from the HASH_SR register. *Table 192* gives a summary of the available features.

Table 192. HASH interrupt requests

Interrupt acronym	Interrupt event	Event flag	Enable control bit	Interrupt clear method
HASH	Digest computation completed	DCIS	DCIE	Clear DCIS or set INIT
	Data input buffer ready to get a new block	DINIS	DINIE	Clear DINIS or write to HASH_DIN

29.6 HASH processing time

Table 193 summarizes the time required to process an intermediate block for each mode of operation.

Table 193. Processing time (in clock cycle)

Mode of operation	FIFO load(1)	Computation phase	Total
MD5	16	50	**66**
SHA-1	16	66	**82**
SHA-224	16	50	**66**
SHA-256			

1. Add the time required to load the block into the processor.

The time required to process the last block of a message (or of a key in HMAC) can be longer. This time depends on the length of the last block and the size of the key (in HMAC mode).

Compared to the processing of an intermediate block, it can be increased by the factor below:

- **1 to 2.5** for a hash message
- **~2.5** for an HMAC input-key
- **1 to 2.5** for an HMAC message
- **~2.5** for an HMAC output key in case of a short key
- **3.5 to 5** for an HMAC output key in case of a long key

29.7 HASH registers

The HASH core is associated with several control and status registers and several message digest registers. All these registers are accessible through 32-bit word accesses only, else an AHB error is generated.

29.7.1 HASH control register (HASH_CR)

Address offset: 0x00

Reset value: 0x0000 0000

31	30	29	28	27	26	25	24	23	22	21	20	19	18	17	16
Res.	Res.	Res.	Res.	Res.	Res.	Res.	Res.	Res.	Res.	Res.	Res.	Res.	ALGO1	Res.	LKEY
													rw		rw

15	14	13	12	11	10	9	8	7	6	5	4	3	2	1	0
Res.	Res.	MDMAT	DINNE	NBW[3:0]				ALGO0	MODE	DATATYPE[1:0]		DMAE	INIT	Res.	Res.
		rw	r	r	r	r	r	rw	rw	rw	rw	rw	w		

Bits 31:19 Reserved, must be kept at reset value.

Bit 17 Reserved, must be kept at reset value.

Bit 16 **LKEY:** Long key selection

This bit selects between short key (≤ 64 bytes) or long key (> 64 bytes) in HMAC mode.
0: Short key (≤ 64 bytes)
1: Long key (> 64 bytes)
This selection is only taken into account when the INIT bit is set and MODE= 1. Changing this bit during a computation has no effect.

Bit 15 Reserved, must be kept at reset value.

Bit 14 Reserved, must be kept at reset value.

Bit 13 **MDMAT:** Multiple DMA transfers

This bit is set when hashing large files when multiple DMA transfers are needed.
0: DCAL is automatically set at the end of a DMA transfer.
1: DCAL is not automatically set at the end of a DMA transfer.

Bit 12 **DINNE:** DIN not empty

This bit is set when the HASH_DIN register holds valid data (that is after being written at least once). It is cleared when either the INIT bit (initialization) or the DCAL bit (completion of the previous message processing) is written to 1.
0: No data are present in the data input buffer
1: The input buffer contains at least one word of data
This bit is read-only.

Bits 11:8 **NBW[3:0]:** Number of words already pushed

This bitfield reflects the number of words in the message that have already been pushed into the IN FIFO. NBW is incremented by one when a write access to the HASH_DIN register is performed (except if DINNE = 0 and the DMA is not used, see below description). NBW goes to zero when the INIT bit is written to 1.

This bitfield is read-only.

If the DMA is not used

0000: if DINNE = 0, no word has been pushed into the DIN buffer (both HASH_DIN register and IN FIFO are empty), otherwise one word has been pushed into the DIN buffer (HASH_DIN register contains one word and IN FIFO is empty)

0001: two words have been pushed into the DIN buffer (i.e. HASH_DIN register and the IN FIFO contain one word each)

...

1111: 16 words have been pushed into the DIN buffer.

If the DMA is used

NBW contains the exact number of words that have been pushed into the IN FIFO by the DMA.

Bits 18, 7 **ALGO[1:0]**: Algorithm selection

These bits select the hash algorithm.

00: SHA-1

01: MD5

10: SHA-224

11: SHA-256

This selection is only taken into account when the INIT bit is set. Changing this bitfield during a computation has no effect.

Bit 6 **MODE:** Mode selection

This bit selects the HASH or HMAC mode for the selected algorithm:

0: Hash mode selected

1: HMAC mode selected. LKEY must be set if the key being used is longer than 64 bytes.

This selection is only taken into account when the INIT bit is set. Changing this bit during a computation has no effect.

Bits 5:4 **DATATYPE[1:0]:** Data type selection

Defines the format of the data entered into the HASH_DIN register:

00: 32-bit data. The data written into HASH_DIN are directly used by the HASH processing, without reordering.

01: 16-bit data, or half-word. The data written into HASH_DIN are considered as two half-words, and are swapped before being used by the HASH processing.

10: 8-bit data, or bytes. The data written into HASH_DIN are considered as four bytes, and are swapped before being used by the HASH processing.

11: bit data, or bit-string. The data written into HASH_DIN are considered as 32 bits (1st bit of the string at position 0), and are swapped before being used by the HASH processing (1st bit of the string at position 31).

Bit 3 **DMAE:** DMA enable

0: DMA transfers disabled

1: DMA transfers enabled. A DMA request is sent as soon as the HASH core is ready to receive data.

After this bit is set it is cleared by hardware while the last data of the message is written into the hash processor.

Setting this bit to 0 while a DMA transfer is on-going is not aborting this current transfer. Instead, the DMA interface of the IP remains internally enabled until the transfer is completed or INIT is written to 1.

Setting INIT bit to 1 does not clear DMAE bit.

Bit 2 **INIT:** Initialize message digest calculation

Writing this bit to 1 resets the hash processor core, so that the HASH is ready to compute the message digest of a new message.

Writing this bit to 0 has no effect. Reading this bit always return 0.

Bits 1:0 Reserved, must be kept at reset value.

29.7.2 HASH data input register (HASH_DIN)

Address offset: 0x04

Reset value: 0x0000 0000

HASH_DIN is the data input register. It is 32-bit wide. This register is used to enter the message by blocks. When the HASH_DIN register is programmed, the value presented on the AHB databus is ‘pushed’ into the hash core and the register takes the new value presented on the AHB databus. To get a correct message format, the DATATYPE bits must have been previously configured in the HASH_CR register.

When a complete block has been written to the HASH_DIN register, an intermediate digest calculation is launched:

- by writing new data into the HASH_DIN register (the first word of the next block) if the DMA is not used (intermediate digest calculation),
- automatically if the DMA is used.

When the last block has been written to the HASH_DIN register, the final digest calculation (including padding) is launched by writing the DCAL bit to 1 in the HASH_STR register (final digest calculation). This operation is automatic if the DMA is used and MDMAT bit is set to 0.

Reading the HASH_DIN register returns the last word written to this location (zero after reset).

Note: When the HASH is busy, a write access to the HASH_DIN register might stall the AHB bus if the digest calculation (intermediate or final) is not complete.

31	30	29	28	27	26	25	24	23	22	21	20	19	18	17	16
DATAIN[31:16]															
rw	rw	rw	rw	rw	rw	rw	rw	rw	rw	rw	rw	rw	rw	rw	rw
15	14	13	12	11	10	9	8	7	6	5	4	3	2	1	0
DATAIN[15:0]															
rw	rw	rw	rw	rw	rw	rw	rw	rw	rw	rw	rw	rw	rw	rw	rw

Bits 31:0 **DATAIN[31:0]:** Data input

Writing this register pushes the current register content into the IN FIFO, and the register takes the new value presented on the AHB databus.

Reading this register returns the current register content.

29.7.3 HASH start register (HASH_STR)

Address offset: 0x08

Reset value: 0x0000 0000

The HASH_STR register has two functions:

- It is used to define the number of valid bits in the last word of the message entered in the hash processor (that is the number of valid least significant bits in the last data written to the HASH_DIN register)
- It is used to start the processing of the last block in the message by writing the DCAL bit to 1

31	30	29	28	27	26	25	24	23	22	21	20	19	18	17	16
Res.	Res.	Res.	Res.	Res.	Res.	Res.	Res.	Res.	Res.	Res.	Res.	Res.	Res.	Res.	Res.

15	14	13	12	11	10	9	8	7	6	5	4	3	2	1	0
Res.	Res.	Res.	Res.	Res.	Res.	Res.	DCAL	Res.	Res.	Res.	NBLW[4:0]				
							rw				rw	rw	rw	rw	rw

Bits 31:9 Reserved, must be kept at reset value.

Bit 8 **DCAL:** Digest calculation

Writing this bit to 1 starts the message padding, using the previously written value of NBLW, and starts the calculation of the final message digest with all data words written to the input FIFO since the INIT bit was last written to 1.

Reading this bit returns 0.

Bits 7:5 Reserved, must be kept at reset value.

Bits 4:0 **NBLW[4:0]:** Number of valid bits in the last word

When the last word of the message bit string is written in HASH_DIN register, the hash processor takes only the valid bits specified as below, after internal data swapping:

0x00: All 32 bits of the last data written are valid message bits i.e. M[31:0]

0x01: Only one bit of the last data written (after swapping) is valid i.e. M[0]

0x02: Only two bits of the last data written (after swapping) are valid i.e. M[1:0]

0x03: Only three bits of the last data written (after swapping) are valid i.e. M[2:0]

...

0x1F: Only 31 bits of the last data written (after swapping) are valid i.e. M[30:0]

The above mechanism is valid only if DCAL=0. If NBLW bits are written while DCAL is set to 1, the NBLW bitfield remains unchanged. In other words it is not possible to configure NBLW and set DCAL at the same time.

Reading NBLW bits returns the last value written to NBLW.

29.7.4 HASH digest registers

These registers contain the message digest result named as follows:

- HASH_HR0, HASH_HR1, HASH_HR2, HASH_HR3 and HASH_HR4 registers return the SHA-1 digest result
- HASH_HR0, HASH_HR1, HASH_HR2 and HASH_HR3 registers return A, B, C and D (respectively), as defined by MD5.
- HASH_HR0 to HASH_HR6 registers return the SHA-224 digest result.
- HASH_HR0 to HASH_HR7 registers return the SHA-256 digest result.

In all cases, the digest most significant bit is stored in HASH_H0[31] and unused HASH_HRx registers are read as zeros.

If a read access to one of these registers is performed while the hash core is calculating an intermediate digest or a final message digest (DCIS bit equals 0), then the read operation is stalled until the hash calculation has completed.

Note: When starting a digest computation for a new message (by writing the INIT bit to 1), HASH_HRx registers are forced to their reset values.

HASH_HR0 to HASH_HR4 registers can be accessed through two different addresses.

HASH aliased digest register x (HASH_HRAx)

Address offset: 0x0C + 0x04 * x (x=0 to 4)

Reset value: 0x0000 0000

The content of the HASH_HRAx registers is identical to the one of the HASH_HRx registers located at address offset 0x310.

31	30	29	28	27	26	25	24	23	22	21	20	19	18	17	16
Hx[31:16]															
r	r	r	r	r	r	r	r	r	r	r	r	r	r	r	r
15	14	13	12	11	10	9	8	7	6	5	4	3	2	1	0
Hx[15:0]															
r	r	r	r	r	r	r	r	r	r	r	r	r	r	r	r

Bits 31:0 **Hx[31:0]**: Hash data x

Refer to *Section 29.7.4: HASH digest registers* introduction.

HASH digest register x (HASH_HRx)

Address offset: 0x310 + 0x04 * x (x=0 to 4)

Reset value: 0x0000 0000

31	30	29	28	27	26	25	24	23	22	21	20	19	18	17	16
Hx[31:16]															
r	r	r	r	r	r	r	r	r	r	r	r	r	r	r	r
15	14	13	12	11	10	9	8	7	6	5	4	3	2	1	0
Hx[15:0]															
r	r	r	r	r	r	r	r	r	r	r	r	r	r	r	r

Bits 31:0 **Hx[31:0]**: Hash data x

Refer to *Section 29.7.4: HASH digest registers* introduction.

HASH supplementary digest register x (HASH_HRx)

Address offset: 0x310 + 0x04 * x (x = 5 to 7)

Reset value: 0x0000 0000

31	30	29	28	27	26	25	24	23	22	21	20	19	18	17	16
Hx[31:16]															
r	r	r	r	r	r	r	r	r	r	r	r	r	r	r	r
15	14	13	12	11	10	9	8	7	6	5	4	3	2	1	0
Hx[15:0]															
r	r	r	r	r	r	r	r	r	r	r	r	r	r	r	r

Bits 31:0 **Hx[31:0]**: Hash data x

Refer to *Section 29.7.4: HASH digest registers* introduction.

29.7.5 HASH interrupt enable register (HASH_IMR)

Address offset: 0x20

Reset value: 0x0000 0000

31	30	29	28	27	26	25	24	23	22	21	20	19	18	17	16
Res.	Res.	Res.	Res.	Res.	Res.	Res.	Res.	Res.	Res.	Res.	Res.	Res.	Res.	Res.	Res.
15	14	13	12	11	10	9	8	7	6	5	4	3	2	1	0
Res.	Res.	Res.	Res.	Res.	Res.	Res.	Res.	Res.	Res.	Res.	Res.	Res.	Res.	DCIE	DINIE
														rw	rw

Bits 31:2 Reserved, must be kept at reset value.

Bit 1 **DCIE:** Digest calculation completion interrupt enable

0: Digest calculation completion interrupt disabled

1: Digest calculation completion interrupt enabled.

Bit 0 **DINIE:** Data input interrupt enable

0: Data input interrupt disabled

1: Data input interrupt enabled

29.7.6 HASH status register (HASH_SR)

Address offset: 0x24

Reset value: 0x0000 0001

31	30	29	28	27	26	25	24	23	22	21	20	19	18	17	16
Res.	Res.	Res.	Res.	Res.	Res.	Res.	Res.	Res.	Res.	Res.	Res.	Res.	Res.	Res.	Res.

15	14	13	12	11	10	9	8	7	6	5	4	3	2	1	0
Res.	Res.	Res.	Res.	Res.	Res.	Res.	Res.	Res.	Res.	Res.	Res.	BUSY	DMAS	DCIS	DINIS
												r	r	rc_w0	rc_w0

Bits 31:4 Reserved, must be kept at reset value.

Bit 3 **BUSY:** Busy bit

0: No block is currently being processed
1: The hash core is processing a block of data

Bit 2 **DMAS:** DMA Status

This bit provides information on the DMA interface activity. It is set with DMAE and cleared when DMAE=0 and no DMA transfer is ongoing. No interrupt is associated with this bit.
0: DMA interface is disabled (DMAE=0) and no transfer is ongoing
1: DMA interface is enabled (DMAE=1) or a transfer is ongoing

Bit 1 **DCIS:** Digest calculation completion interrupt status

This bit is set by hardware when a digest becomes ready (the whole message has been processed). It is cleared by writing it to 0 or by writing the INIT bit to 1 in the HASH_CR register.
0: No digest available in the HASH_HRx registers (zeros are returned)
1: Digest calculation complete, a digest is available in the HASH_HRx registers. An interrupt is generated if the DCIE bit is set in the HASH_IMR register.

Bit 0 **DINIS:** Data input interrupt status

This bit is set by hardware when the FIFO is ready to get a new block (16 locations are free). It is cleared by writing it to 0 or by writing the HASH_DIN register.
0: Less than 16 locations are free in the input buffer
1: A new block can be entered into the input buffer. An interrupt is generated if the DINIE bit is set in the HASH_IMR register.
When DINIS=0, HASH_CSRx registers reads as zero.

29.7.7 HASH context swap registers

These registers contain the complete internal register states of the hash processor. They are useful when a suspend/resume operation has to be performed because a high-priority task needs to use the hash processor while it is already used by another task.

When such an event occurs, the HASH_CSRx registers have to be read and the read values have to be saved in the system memory space. Then the hash processor can be used by the preemptive task, and when the hash computation is complete, the saved context can be read from memory and written back into the HASH_CSRx registers.

HASH_CSRx registers can be read only when DINIS equals to 1, otherwise zeros are returned.

HASH context swap register 0 (HASH_CSR0)

Address offset: 0x0F8

Reset value: 0x0000 0002

31	30	29	28	27	26	25	24	23	22	21	20	19	18	17	16
CS0[31:16]															
rw	rw	rw	rw	rw	rw	rw	rw	rw	rw	rw	rw	rw	rw	rw	rw
15	14	13	12	11	10	9	8	7	6	5	4	3	2	1	0
CS0[15:0]															
rw	rw	rw	rw	rw	rw	rw	rw	rw	rw	rw	rw	rw	rw	rw	rw

HASH context swap register x (HASH_CSRx)

Address offset: 0x0F8 + 0x4 * x (x = 1 to 53)

Reset value: 0x0000 0000

31	30	29	28	27	26	25	24	23	22	21	20	19	18	17	16
CSx[31:16]															
rw	rw	rw	rw	rw	rw	rw	rw	rw	rw	rw	rw	rw	rw	rw	rw
15	14	13	12	11	10	9	8	7	6	5	4	3	2	1	0
CSx[15:0]															
rw	rw	rw	rw	rw	rw	rw	rw	rw	rw	rw	rw	rw	rw	rw	rw

29.7.8 HASH register map

Table 194 gives the summary HASH register map and reset values.

Table 194. HASH1 register map and reset values

Offset	Register name reset value	Register size																															
		31	30	29	28	27	26	25	24	23	22	21	20	19	18	17	16	15	14	13	12	11	10	9	8	7	6	5	4	3	2	1	0
0x00	HASH_CR	Res.	Res.	Res.	Res.	Res.	Res.	Res.	Res.	Res.	Res.	Res.	Res.	Res.	ALGO[1]	Res.	LKEY	Res.	Res.	MDMAT	DINNE	NBW[3:0]				ALGO[0]	MODE	DATATYPE		DMAE	INIT	Res.	Res.
	Reset value														0		0			0	0	0	0	0	0	0	0	0	0	0	0		
0x04	HASH_DIN	DATAIN[31:16]																															
	Reset value	0	0	0	0	0	0	0	0	0	0	0	0	0	0	0	0	0	0	0	0	0	0	0	0	0	0	0	0	0	0	0	0
0x08	HASH_STR	Res.	Res.	Res.	Res.	Res.	Res.	Res.	Res.	Res.	Res.	Res.	Res.	Res.	Res.	Res.	Res.	Res.	Res.	Res.	Res.	Res.	Res.	Res.	DCAL	Res.	Res.	Res.	NBLW[4:0]				
	Reset value																								0				0	0	0	0	0
0x0C	HASH_HRA0	H0																															
	Reset value	0	0	0	0	0	0	0	0	0	0	0	0	0	0	0	0	0	0	0	0	0	0	0	0	0	0	0	0	0	0	0	0
0x10	HASH_HRA1	H1																															
	Reset value	0	0	0	0	0	0	0	0	0	0	0	0	0	0	0	0	0	0	0	0	0	0	0	0	0	0	0	0	0	0	0	0
0x14	HASH_HRA2	H2																															
	Reset value	0	0	0	0	0	0	0	0	0	0	0	0	0	0	0	0	0	0	0	0	0	0	0	0	0	0	0	0	0	0	0	0
0x18	HASH_HRA3	H3																															
	Reset value	0	0	0	0	0	0	0	0	0	0	0	0	0	0	0	0	0	0	0	0	0	0	0	0	0	0	0	0	0	0	0	0
0x1C	HASH_HRA4	H4																															
	Reset value	0	0	0	0	0	0	0	0	0	0	0	0	0	0	0	0	0	0	0	0	0	0	0	0	0	0	0	0	0	0	0	0
0x20	HASH_IMR	Res.	Res.	Res.	Res.	Res.	Res.	Res.	Res.	Res.	Res.	Res.	Res.	Res.	Res.	Res.	Res.	Res.	Res.	Res.	Res.	Res.	Res.	Res.	Res.	Res.	Res.	Res.	Res.	Res.	Res.	DCIE	DINIE
	Reset value																															0	0
0x24	HASH_SR	Res.	Res.	Res.	Res.	Res.	Res.	Res.	Res.	Res.	Res.	Res.	Res.	Res.	Res.	Res.	Res.	Res.	Res.	Res.	Res.	Res.	Res.	Res.	Res.	Res.	Res.	Res.	Res.	BUSY	DMAS	DCIS	DINIS
	Reset value																													0	0	0	1
Reserved																																	
0xF8	HASH_CSR0	CSR0																															
	Reset value	0	0	0	0	0	0	0	0	0	0	0	0	0	0	0	0	0	0	0	0	0	0	0	0	0	0	0	0	0	0	1	0
0xFC	HASH_CSR1	CSR1																															
	Reset value	0	0	0	0	0	0	0	0	0	0	0	0	0	0	0	0	0	0	0	0	0	0	0	0	0	0	0	0	0	0	0	0
...																																	
0x1CC	HASH_CSR53	CSR53																															
	Reset value	0	0	0	0	0	0	0	0	0	0	0	0	0	0	0	0	0	0	0	0	0	0	0	0	0	0	0	0	0	0	0	0
Reserved																																	
0x310	HASH_HR0	H0																															
	Reset value	0	0	0	0	0	0	0	0	0	0	0	0	0	0	0	0	0	0	0	0	0	0	0	0	0	0	0	0	0	0	0	0
0x314	HASH_HR1	H1																															
	Reset value	0	0	0	0	0	0	0	0	0	0	0	0	0	0	0	0	0	0	0	0	0	0	0	0	0	0	0	0	0	0	0	0
0x318	HASH_HR2	H2																															
	Reset value	0	0	0	0	0	0	0	0	0	0	0	0	0	0	0	0	0	0	0	0	0	0	0	0	0	0	0	0	0	0	0	0
0x31C	HASH_HR3	H3																															
	Reset value	0	0	0	0	0	0	0	0	0	0	0	0	0	0	0	0	0	0	0	0	0	0	0	0	0	0	0	0	0	0	0	0
0x320	HASH_HR4	H4																															
	Reset value	0	0	0	0	0	0	0	0	0	0	0	0	0	0	0	0	0	0	0	0	0	0	0	0	0	0	0	0	0	0	0	0
0x324	HASH_HR5	H5																															
	Reset value	0	0	0	0	0	0	0	0	0	0	0	0	0	0	0	0	0	0	0	0	0	0	0	0	0	0	0	0	0	0	0	0
0x328	HASH_HR6	H6																															
	Reset value	0	0	0	0	0	0	0	0	0	0	0	0	0	0	0	0	0	0	0	0	0	0	0	0	0	0	0	0	0	0	0	0
0x32C	HASH_HR7	H7																															
	Reset value	0	0	0	0	0	0	0	0	0	0	0	0	0	0	0	0	0	0	0	0	0	0	0	0	0	0	0	0	0	0	0	0

Refer to *Section 2.2 on page 75* for the register boundary addresses.

30 Advanced-control timers (TIM1/TIM8)

30.1 TIM1/TIM8 introduction

The advanced-control timers (TIM1/TIM8) consist of a 16-bit auto-reload counter driven by a programmable prescaler.

It may be used for a variety of purposes, including measuring the pulse lengths of input signals (input capture) or generating output waveforms (output compare, PWM, complementary PWM with dead-time insertion).

Pulse lengths and waveform periods can be modulated from a few microseconds to several milliseconds using the timer prescaler and the RCC clock controller prescalers.

The advanced-control (TIM1/TIM8) and general-purpose (TIMy) timers are completely independent, and do not share any resources. They can be synchronized together as described in *Section 30.3.26: Timer synchronization*.

30.2 TIM1/TIM8 main features

TIM1/TIM8 timer features include:

- 16-bit up, down, up/down auto-reload counter.
- 16-bit programmable prescaler allowing dividing (also “on the fly”) the counter clock frequency either by any factor between 1 and 65536.
- Up to 6 independent channels for:
  - Input Capture (but channels 5 and 6)
  - Output Compare
  - PWM generation (Edge and Center-aligned Mode)
  - One-pulse mode output
- Complementary outputs with programmable dead-time
- Synchronization circuit to control the timer with external signals and to interconnect several timers together.
- Repetition counter to update the timer registers only after a given number of cycles of the counter.
- 2 break inputs to put the timer’s output signals in a safe user selectable configuration.
- Interrupt/DMA generation on the following events:
  - Update: counter overflow/underflow, counter initialization (by software or internal/external trigger)
  - Trigger event (counter start, stop, initialization or count by internal/external trigger)
  - Input capture
  - Output compare
- Supports incremental (quadrature) encoder and Hall-sensor circuitry for positioning purposes
- Trigger input for external clock or cycle-by-cycle current management

Figure 223. Advanced-control timer block diagram

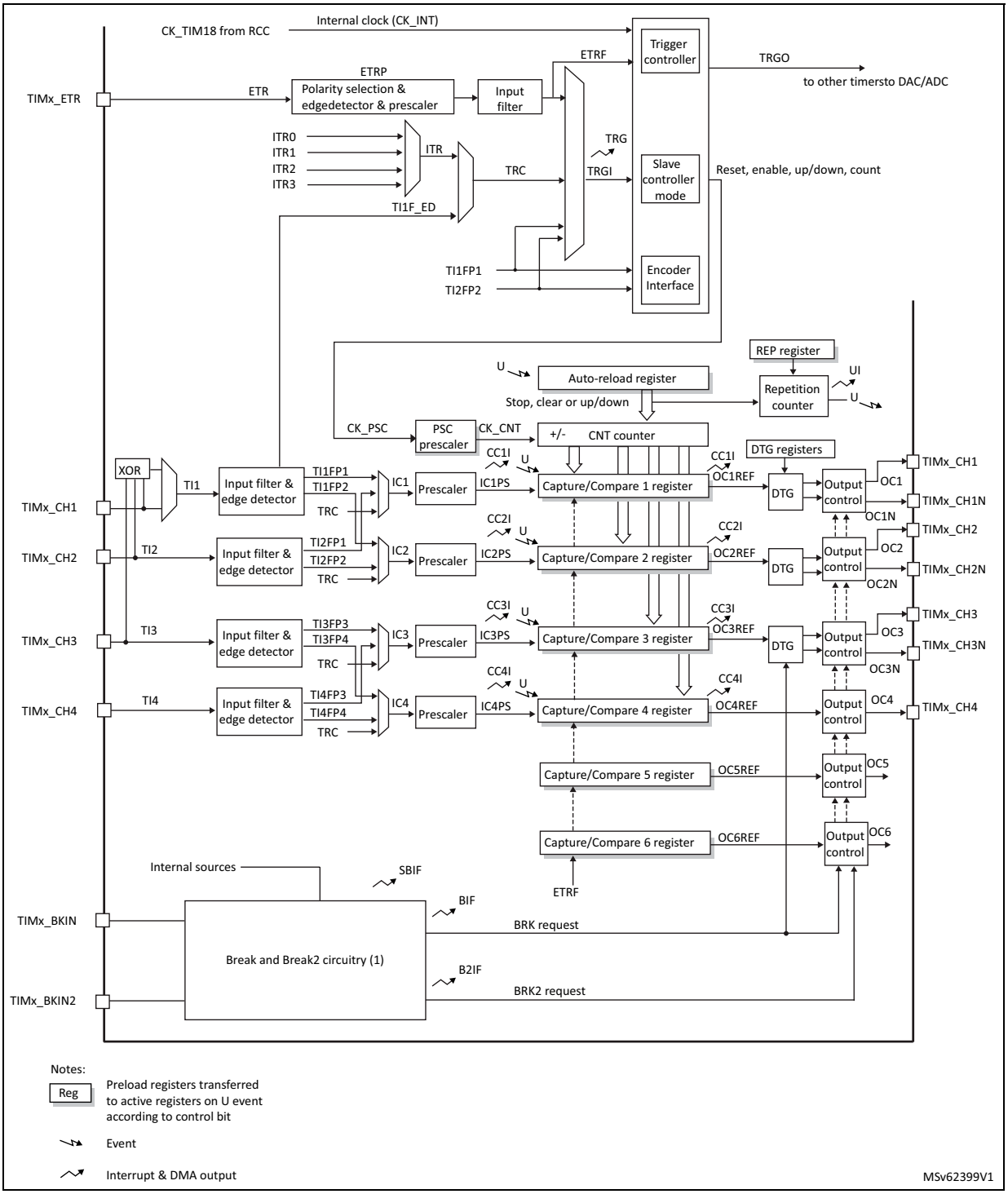

1. See *Figure 267: Break and Break2 circuitry overview* for details

30.3 TIM1/TIM8 functional description

30.3.1 Time-base unit

The main block of the programmable advanced-control timer is a 16-bit counter with its related auto-reload register. The counter can count up, down or both up and down. The counter clock can be divided by a prescaler.

The counter, the auto-reload register and the prescaler register can be written or read by software. This is true even when the counter is running.

The time-base unit includes:

- Counter register (TIMx_CNT)
- Prescaler register (TIMx_PSC)
- Auto-reload register (TIMx_ARR)
- Repetition counter register (TIMx_RCR)

The auto-reload register is preloaded. Writing to or reading from the auto-reload register accesses the preload register. The content of the preload register are transferred into the shadow register permanently or at each update event (UEV), depending on the auto-reload preload enable bit (ARPE) in TIMx_CR1 register. The update event is sent when the counter reaches the overflow (or underflow when downcounting) and if the UDIS bit equals 0 in the TIMx_CR1 register. It can also be generated by software. The generation of the update event is described in detailed for each configuration.

The counter is clocked by the prescaler output CK_CNT, which is enabled only when the counter enable bit (CEN) in TIMx_CR1 register is set (refer also to the slave mode controller description to get more details on counter enabling).

Note that the counter starts counting 1 clock cycle after setting the CEN bit in the TIMx_CR1 register.

Prescaler description

The prescaler can divide the counter clock frequency by any factor between 1 and 65536. It is based on a 16-bit counter controlled through a 16-bit register (in the TIMx_PSC register). It can be changed on the fly as this control register is buffered. The new prescaler ratio is taken into account at the next update event.

Figure 224 and *Figure 225* give some examples of the counter behavior when the prescaler ratio is changed on the fly:

Figure 224. Counter timing diagram with prescaler division change from 1 to 2

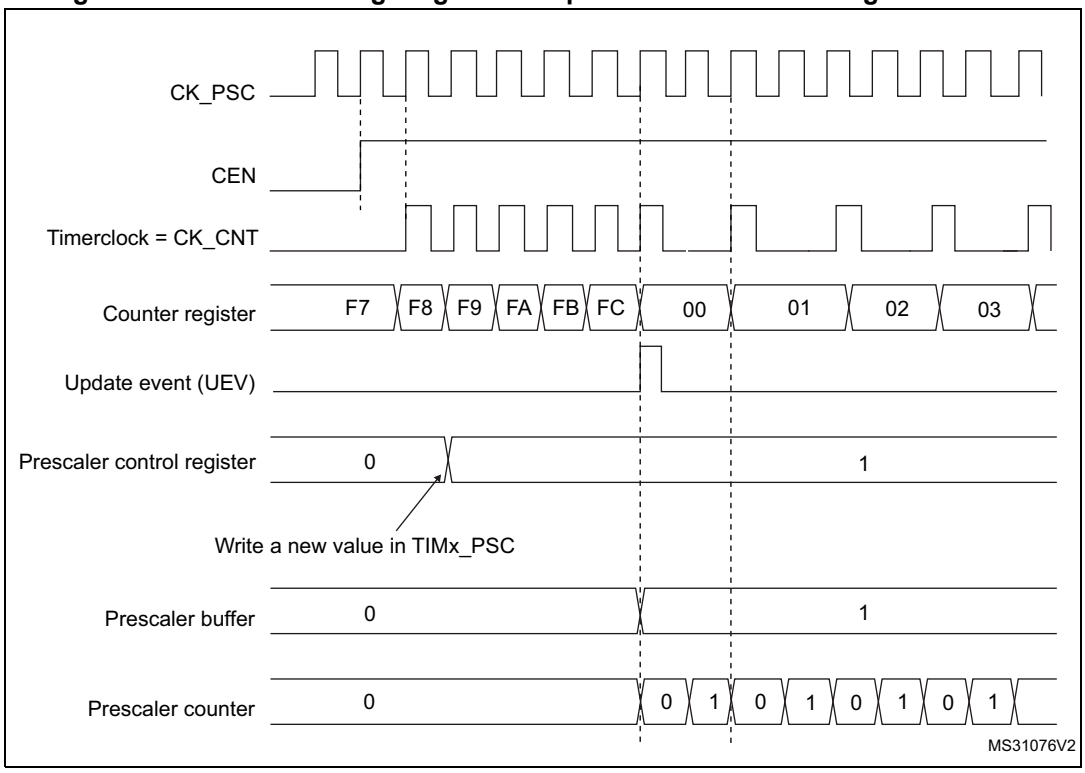

Figure 225. Counter timing diagram with prescaler division change from 1 to 4

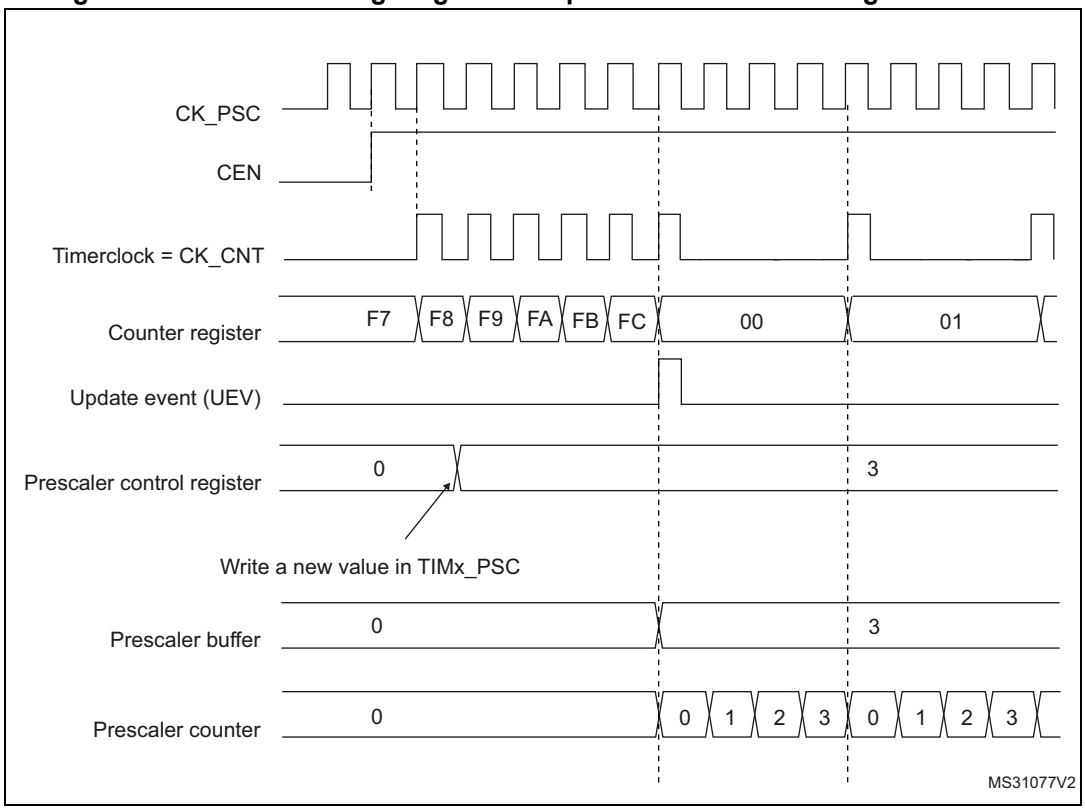

30.3.2 Counter modes

Upcounting mode

In upcounting mode, the counter counts from 0 to the auto-reload value (content of the TIMx_ARR register), then restarts from 0 and generates a counter overflow event.

If the repetition counter is used, the update event (UEV) is generated after upcounting is repeated for the number of times programmed in the repetition counter register (TIMx_RCR) + 1. Else the update event is generated at each counter overflow.

Setting the UG bit in the TIMx_EGR register (by software or by using the slave mode controller) also generates an update event.

The UEV event can be disabled by software by setting the UDIS bit in the TIMx_CR1 register. This is to avoid updating the shadow registers while writing new values in the preload registers. Then no update event occurs until the UDIS bit has been written to 0. However, the counter restarts from 0, as well as the counter of the prescaler (but the prescale rate does not change). In addition, if the URS bit (update request selection) in TIMx_CR1 register is set, setting the UG bit generates an update event UEV but without setting the UIF flag (thus no interrupt or DMA request is sent). This is to avoid generating both update and capture interrupts when clearing the counter on the capture event.

When an update event occurs, all the registers are updated and the update flag (UIF bit in TIMx_SR register) is set (depending on the URS bit):

- The repetition counter is reloaded with the content of TIMx_RCR register,
- The auto-reload shadow register is updated with the preload value (TIMx_ARR),
- The buffer of the prescaler is reloaded with the preload value (content of the TIMx_PSC register).

The following figures show some examples of the counter behavior for different clock frequencies when TIMx_ARR=0x36.

Figure 226. Counter timing diagram, internal clock divided by 1

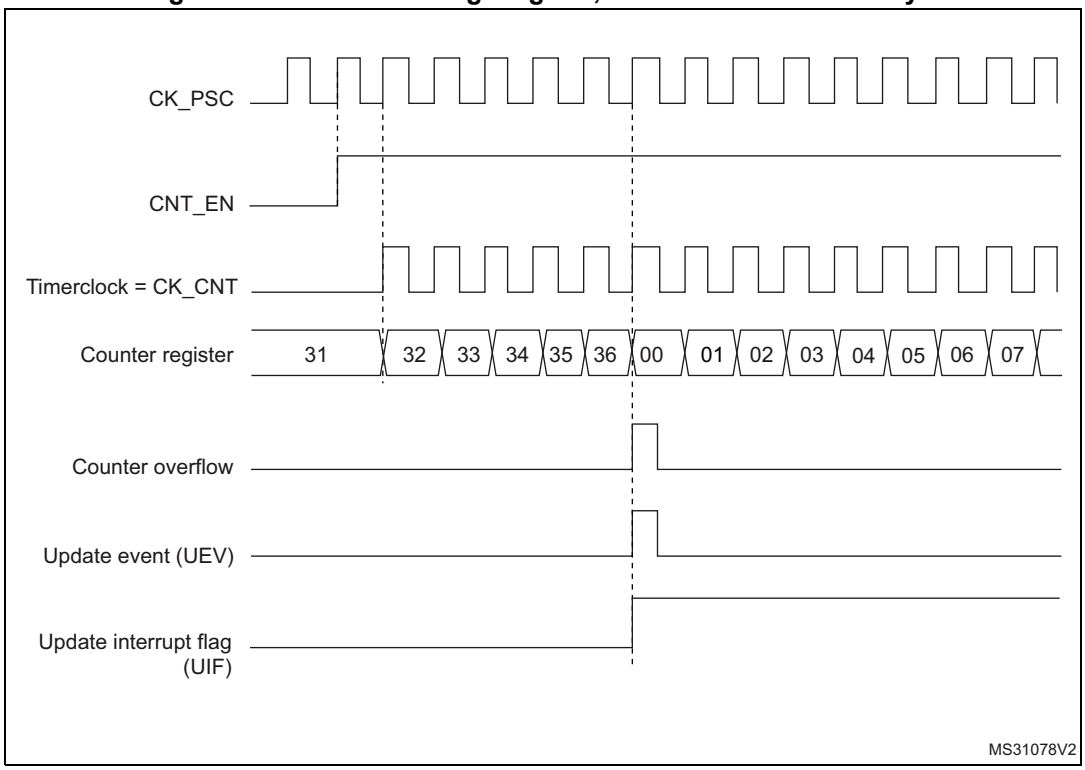

Figure 227. Counter timing diagram, internal clock divided by 2

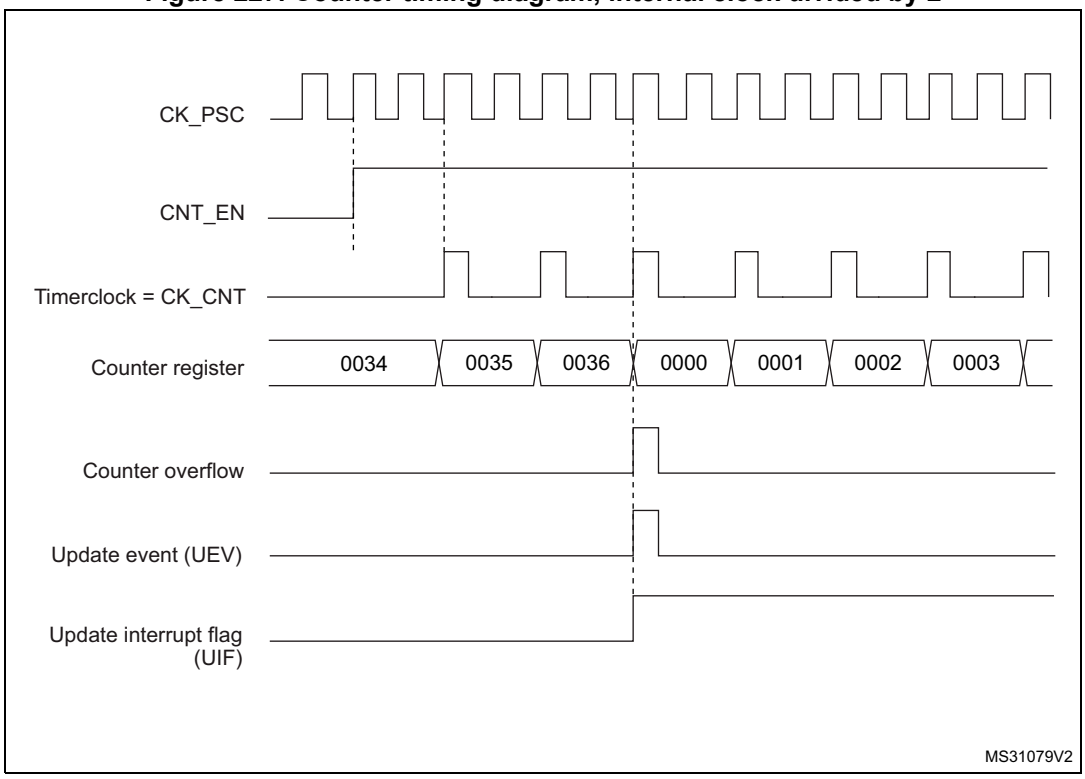

Figure 228. Counter timing diagram, internal clock divided by 4

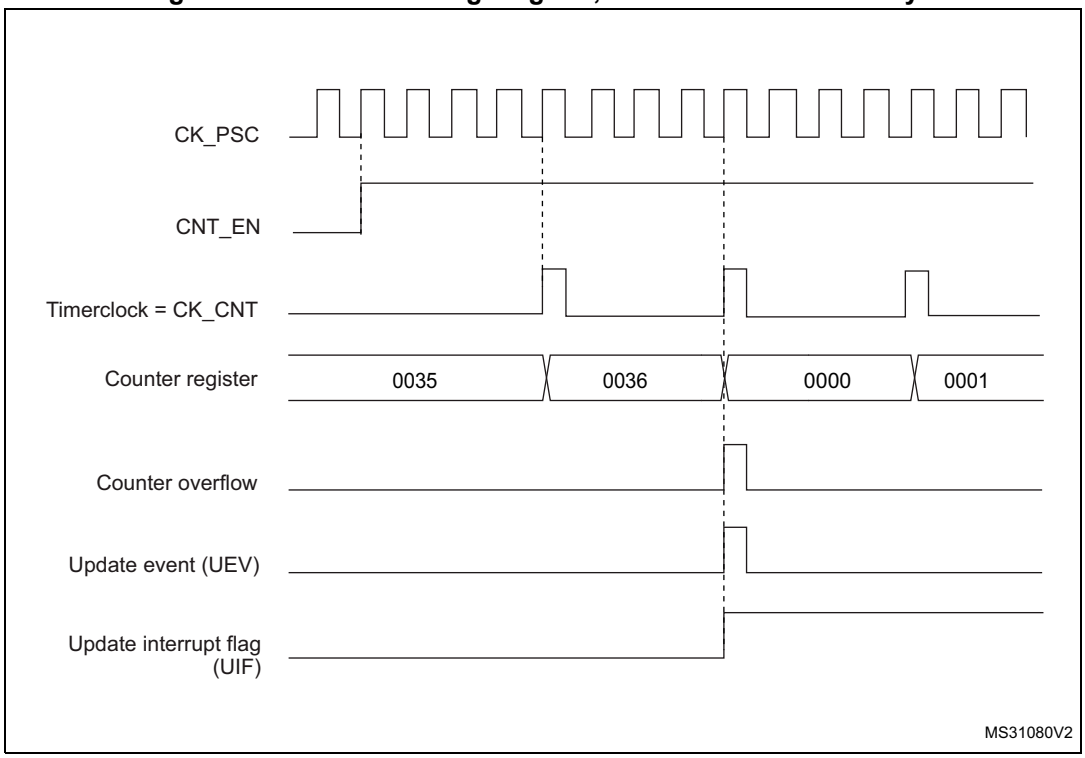

Figure 229. Counter timing diagram, internal clock divided by N

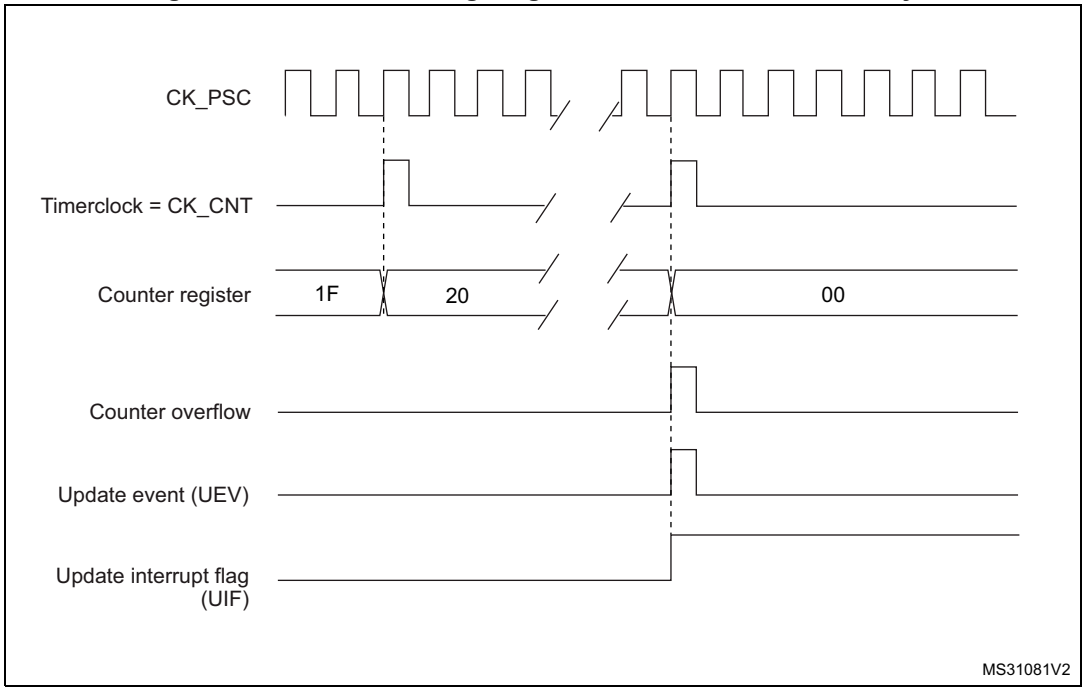

Figure 230. Counter timing diagram, update event when ARPE=0 (TIMx_ARR not preloaded)

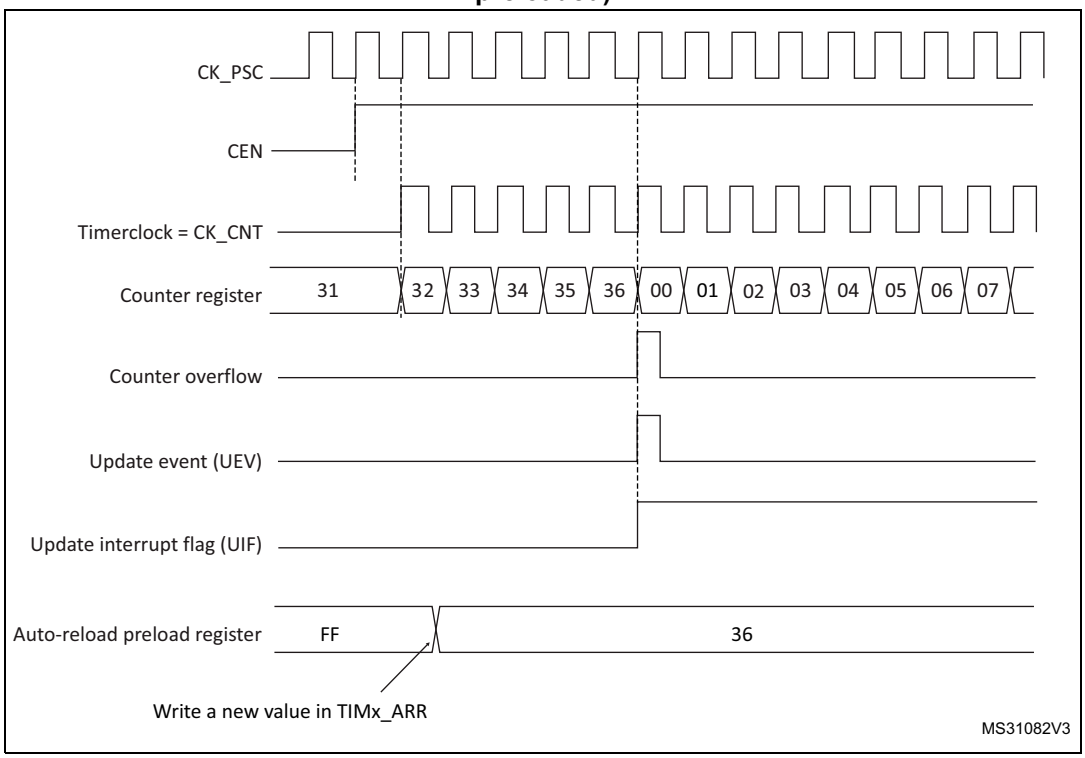

Figure 231. Counter timing diagram, update event when ARPE=1 (TIMx_ARR preloaded)

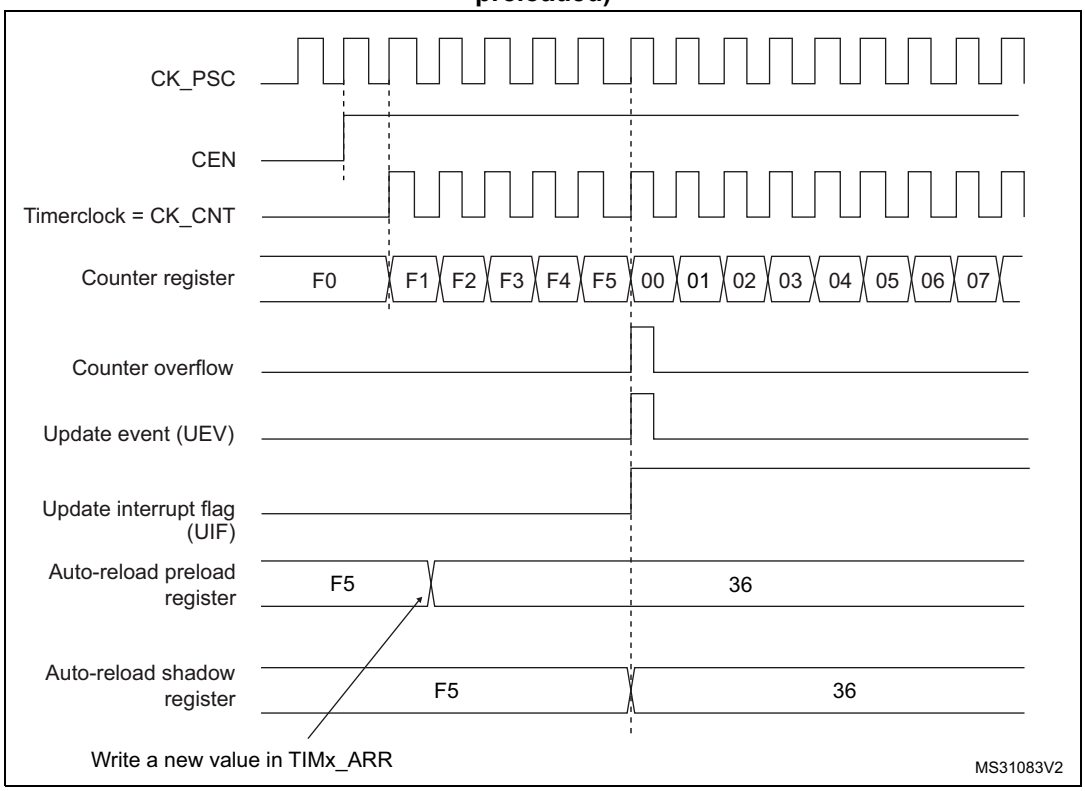

Downcounting mode

In downcounting mode, the counter counts from the auto-reload value (content of the TIMx_ARR register) down to 0, then restarts from the auto-reload value and generates a counter underflow event.

If the repetition counter is used, the update event (UEV) is generated after downcounting is repeated for the number of times programmed in the repetition counter register (TIMx_RCR) + 1. Else the update event is generated at each counter underflow.

Setting the UG bit in the TIMx_EGR register (by software or by using the slave mode controller) also generates an update event.

The UEV update event can be disabled by software by setting the UDIS bit in TIMx_CR1 register. This is to avoid updating the shadow registers while writing new values in the preload registers. Then no update event occurs until UDIS bit has been written to 0. However, the counter restarts from the current auto-reload value, whereas the counter of the prescaler restarts from 0 (but the prescale rate doesn't change).

In addition, if the URS bit (update request selection) in TIMx_CR1 register is set, setting the UG bit generates an update event UEV but without setting the UIF flag (thus no interrupt or DMA request is sent). This is to avoid generating both update and capture interrupts when clearing the counter on the capture event.

When an update event occurs, all the registers are updated and the update flag (UIF bit in TIMx_SR register) is set (depending on the URS bit):

- The repetition counter is reloaded with the content of TIMx_RCR register.
- The buffer of the prescaler is reloaded with the preload value (content of the TIMx_PSC register).
- The auto-reload active register is updated with the preload value (content of the TIMx_ARR register). Note that the auto-reload is updated before the counter is reloaded, so that the next period is the expected one.

The following figures show some examples of the counter behavior for different clock frequencies when TIMx_ARR=0x36.

Figure 232. Counter timing diagram, internal clock divided by 1

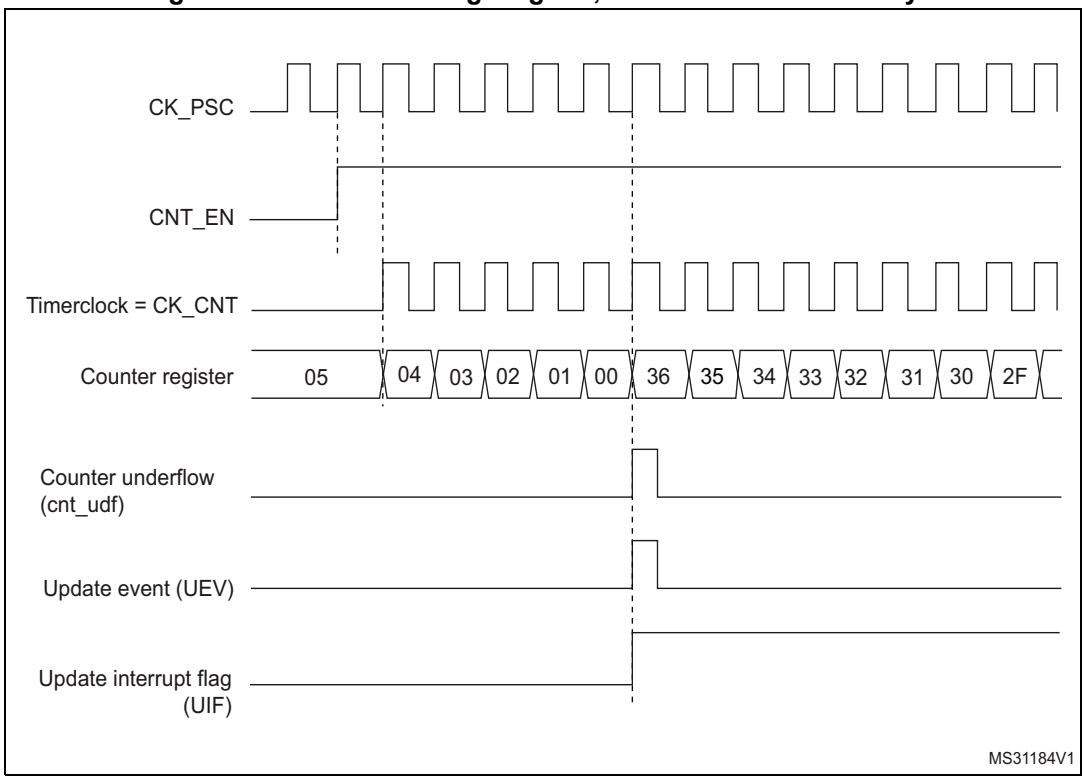

Figure 233. Counter timing diagram, internal clock divided by 2

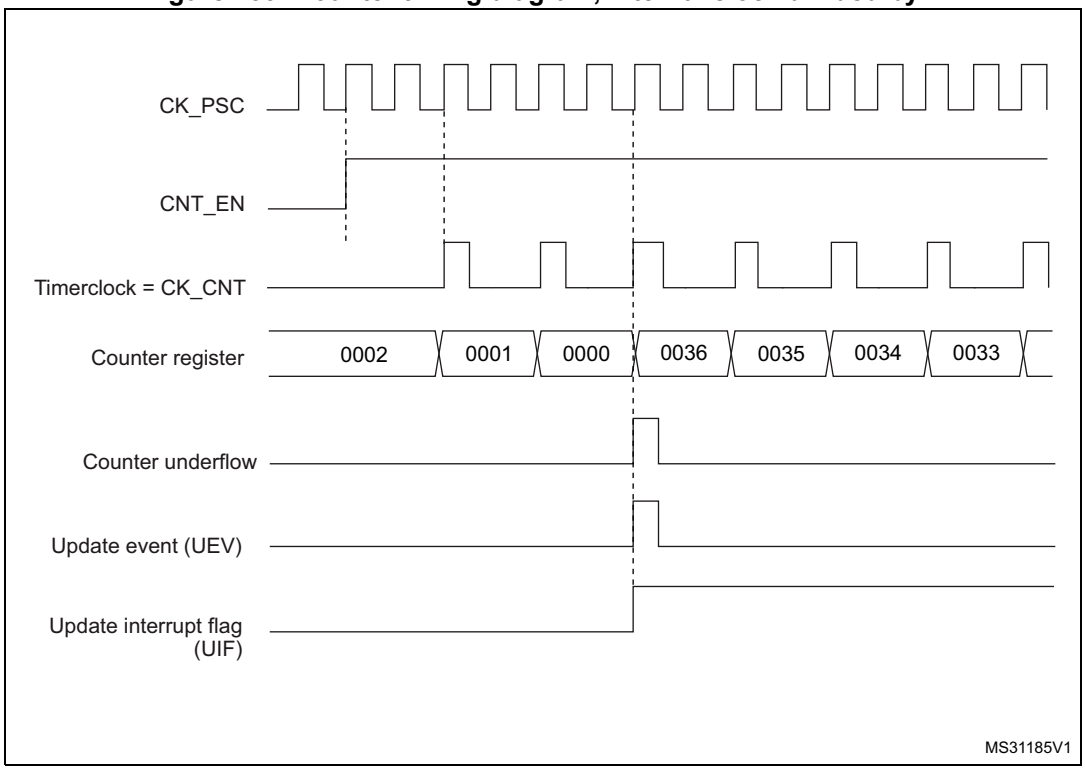

Figure 234. Counter timing diagram, internal clock divided by 4

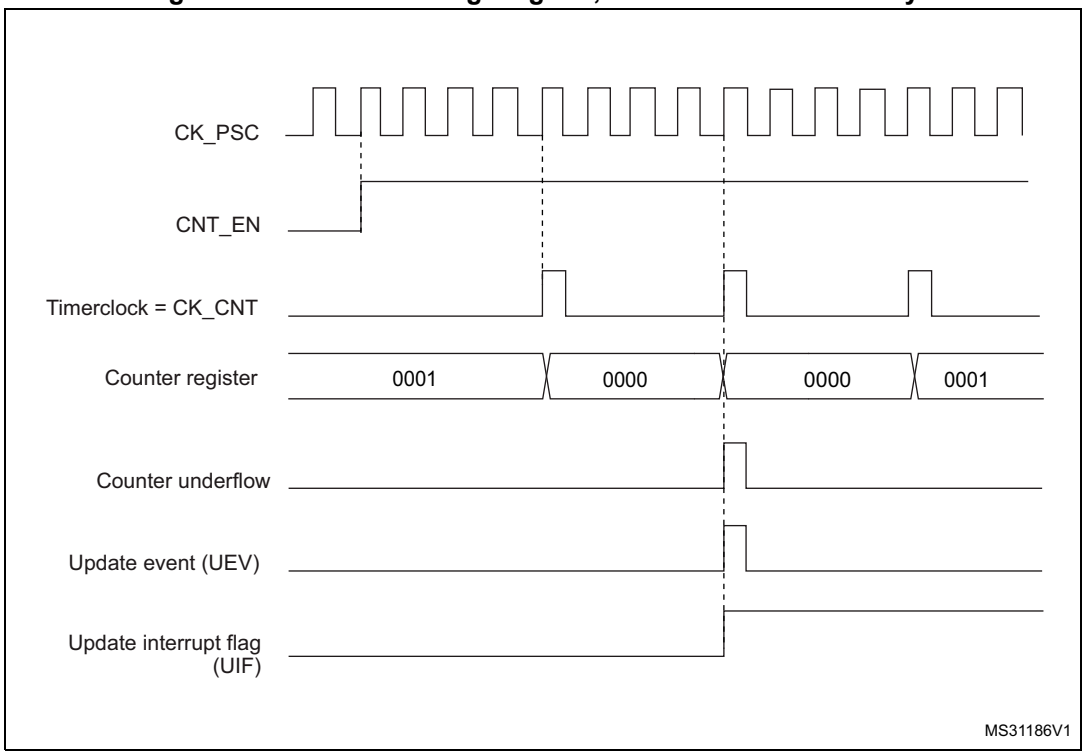

Figure 235. Counter timing diagram, internal clock divided by N

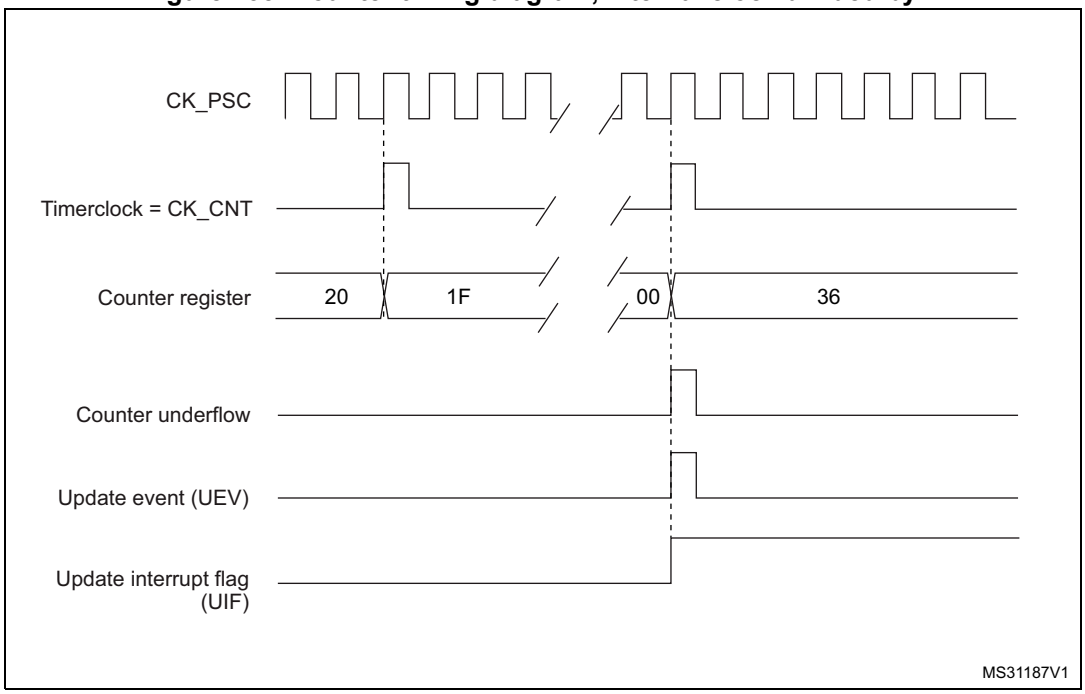

Figure 236. Counter timing diagram, update event when repetition counter is not used

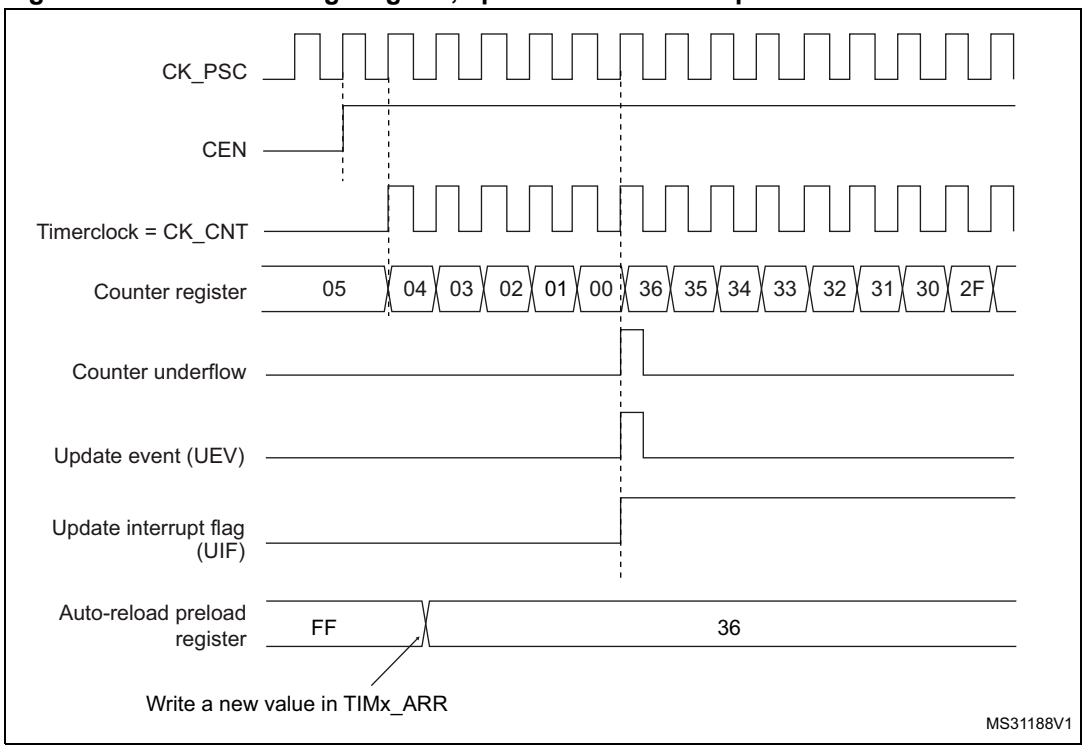

Center-aligned mode (up/down counting)

In center-aligned mode, the counter counts from 0 to the auto-reload value (content of the TIMx_ARR register) – 1, generates a counter overflow event, then counts from the auto-reload value down to 1 and generates a counter underflow event. Then it restarts counting from 0.

Center-aligned mode is active when the CMS bits in TIMx_CR1 register are not equal to '00'. The Output compare interrupt flag of channels configured in output is set when: the counter counts down (Center aligned mode 1, CMS = "01"), the counter counts up (Center aligned mode 2, CMS = "10") the counter counts up and down (Center aligned mode 3, CMS = "11").

In this mode, the DIR direction bit in the TIMx_CR1 register cannot be written. It is updated by hardware and gives the current direction of the counter.

The update event can be generated at each counter overflow and at each counter underflow or by setting the UG bit in the TIMx_EGR register (by software or by using the slave mode controller) also generates an update event. In this case, the counter restarts counting from 0, as well as the counter of the prescaler.

The UEV update event can be disabled by software by setting the UDIS bit in the TIMx_CR1 register. This is to avoid updating the shadow registers while writing new values in the preload registers. Then no update event occurs until UDIS bit has been written to 0. However, the counter continues counting up and down, based on the current auto-reload value.

In addition, if the URS bit (update request selection) in TIMx_CR1 register is set, setting the UG bit generates an UEV update event but without setting the UIF flag (thus no interrupt or

DMA request is sent). This is to avoid generating both update and capture interrupts when clearing the counter on the capture event.

When an update event occurs, all the registers are updated and the update flag (UIF bit in TIMx_SR register) is set (depending on the URS bit):

- The repetition counter is reloaded with the content of TIMx_RCR register
- The buffer of the prescaler is reloaded with the preload value (content of the TIMx_PSC register)
- The auto-reload active register is updated with the preload value (content of the TIMx_ARR register). Note that if the update source is a counter overflow, the auto-reload is updated before the counter is reloaded, so that the next period is the expected one (the counter is loaded with the new value).

The following figures show some examples of the counter behavior for different clock frequencies.

Figure 237. Counter timing diagram, internal clock divided by 1, TIMx_ARR = 0x6

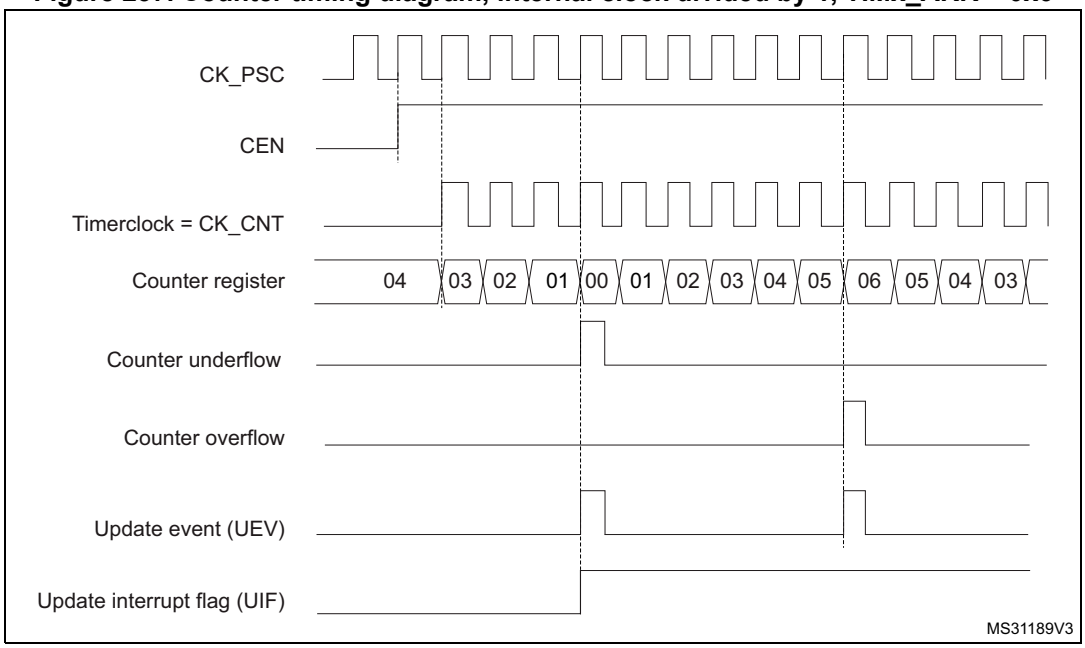

1. Here, center-aligned mode 1 is used (for more details refer to *Section 30.4: TIM1/TIM8 registers*).

Figure 238. Counter timing diagram, internal clock divided by 2

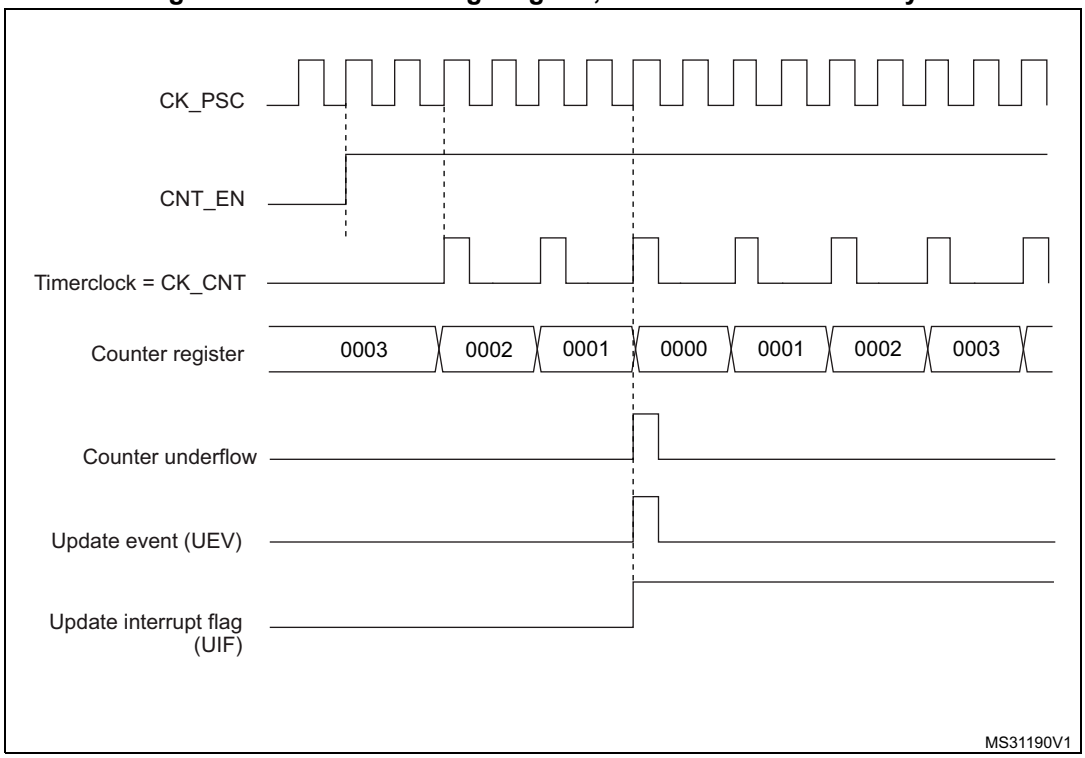

Figure 239. Counter timing diagram, internal clock divided by 4, TIMx_ARR=0x36

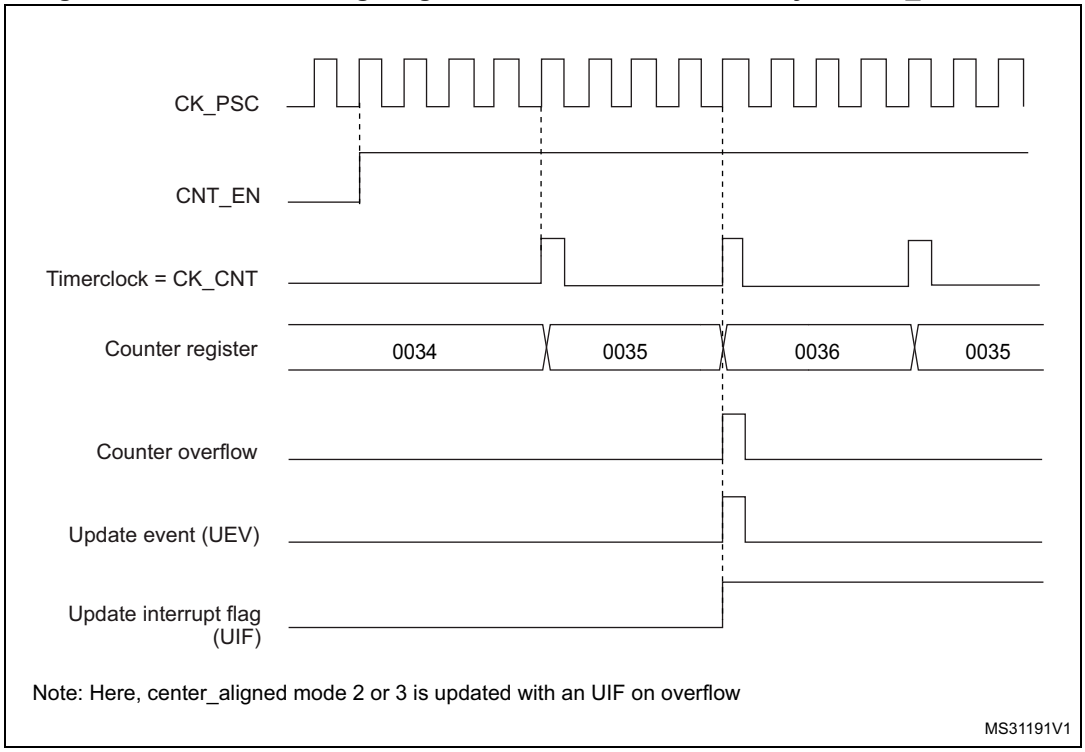

Figure 240. Counter timing diagram, internal clock divided by N

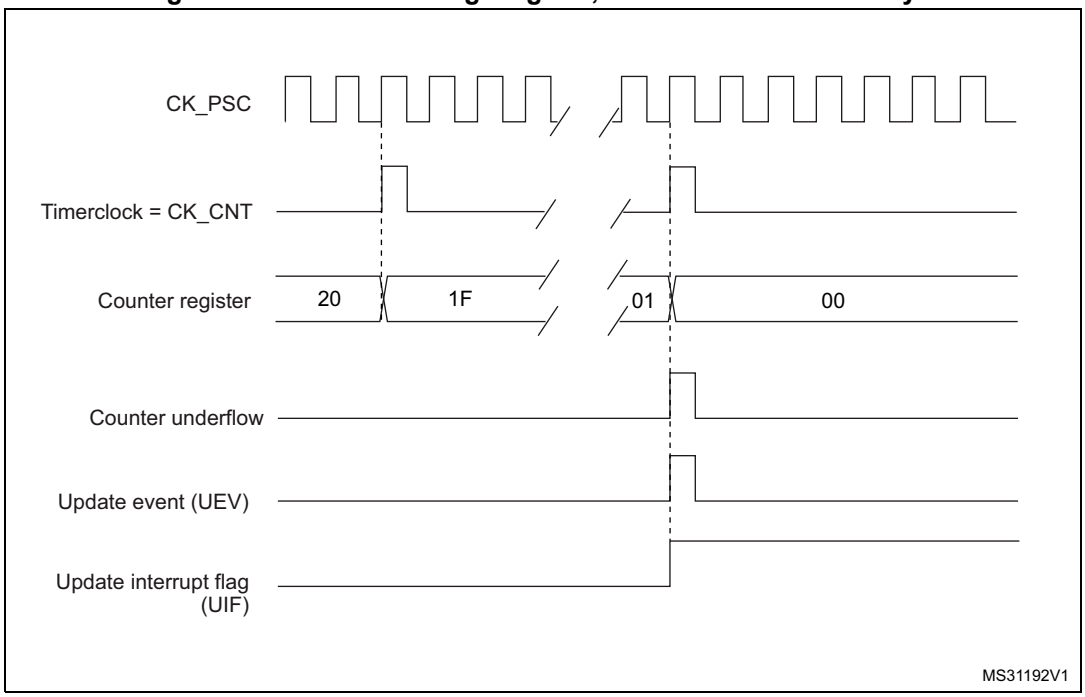

Figure 241. Counter timing diagram, update event with ARPE=1 (counter underflow)

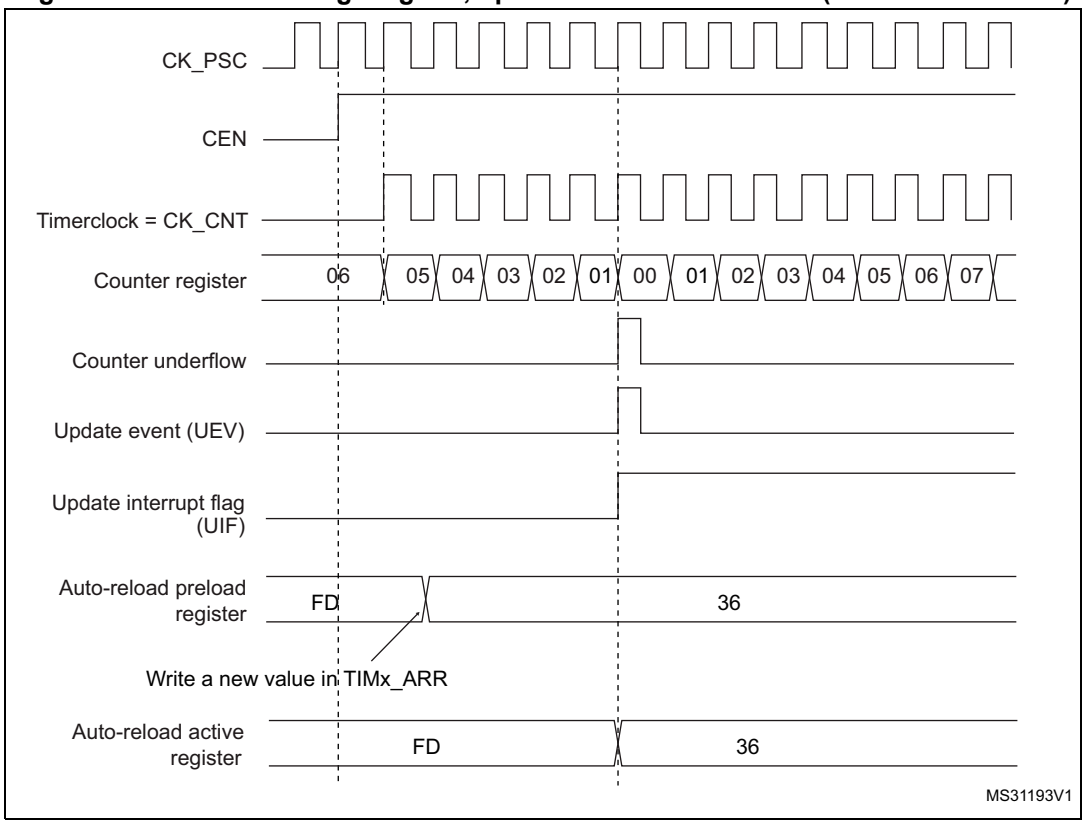

Figure 242. Counter timing diagram, Update event with ARPE=1 (counter overflow)

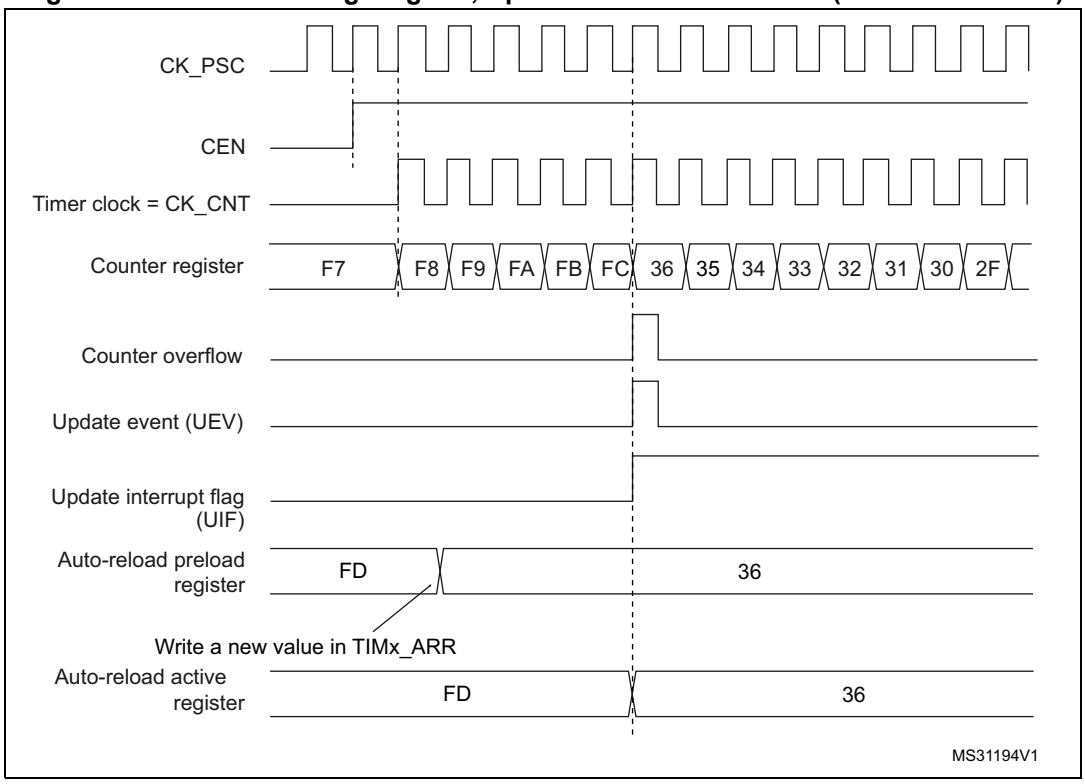

30.3.3 Repetition counter

Section 30.3.1: Time-base unit describes how the update event (UEV) is generated with respect to the counter overflows/underflows. It is actually generated only when the repetition counter has reached zero. This can be useful when generating PWM signals.

This means that data are transferred from the preload registers to the shadow registers (TIMx_ARR auto-reload register, TIMx_PSC prescaler register, but also TIMx_CCRx capture/compare registers in compare mode) every N+1 counter overflows or underflows, where N is the value in the TIMx_RCR repetition counter register.

The repetition counter is decremented:

- At each counter overflow in upcounting mode,
- At each counter underflow in downcounting mode,
- At each counter overflow and at each counter underflow in center-aligned mode. Although this limits the maximum number of repetition to 32768 PWM cycles, it makes it possible to update the duty cycle twice per PWM period. When refreshing compare registers only once per PWM period in center-aligned mode, maximum resolution is $2xT_{ck}$, due to the symmetry of the pattern.

The repetition counter is an auto-reload type; the repetition rate is maintained as defined by the TIMx_RCR register value (refer to *Figure 243*). When the update event is generated by software (by setting the UG bit in TIMx_EGR register) or by hardware through the slave mode controller, it occurs immediately whatever the value of the repetition counter is and the repetition counter is reloaded with the content of the TIMx_RCR register.

In Center aligned mode, for odd values of RCR, the update event occurs either on the overflow or on the underflow depending on when the RCR register was written and when the counter was launched: if the RCR was written before launching the counter, the UEV occurs on the underflow. If the RCR was written after launching the counter, the UEV occurs on the overflow.

For example, for RCR = 3, the UEV is generated each 4th overflow or underflow event depending on when the RCR was written.

Figure 243. Update rate examples depending on mode and TIMx_RCR register settings

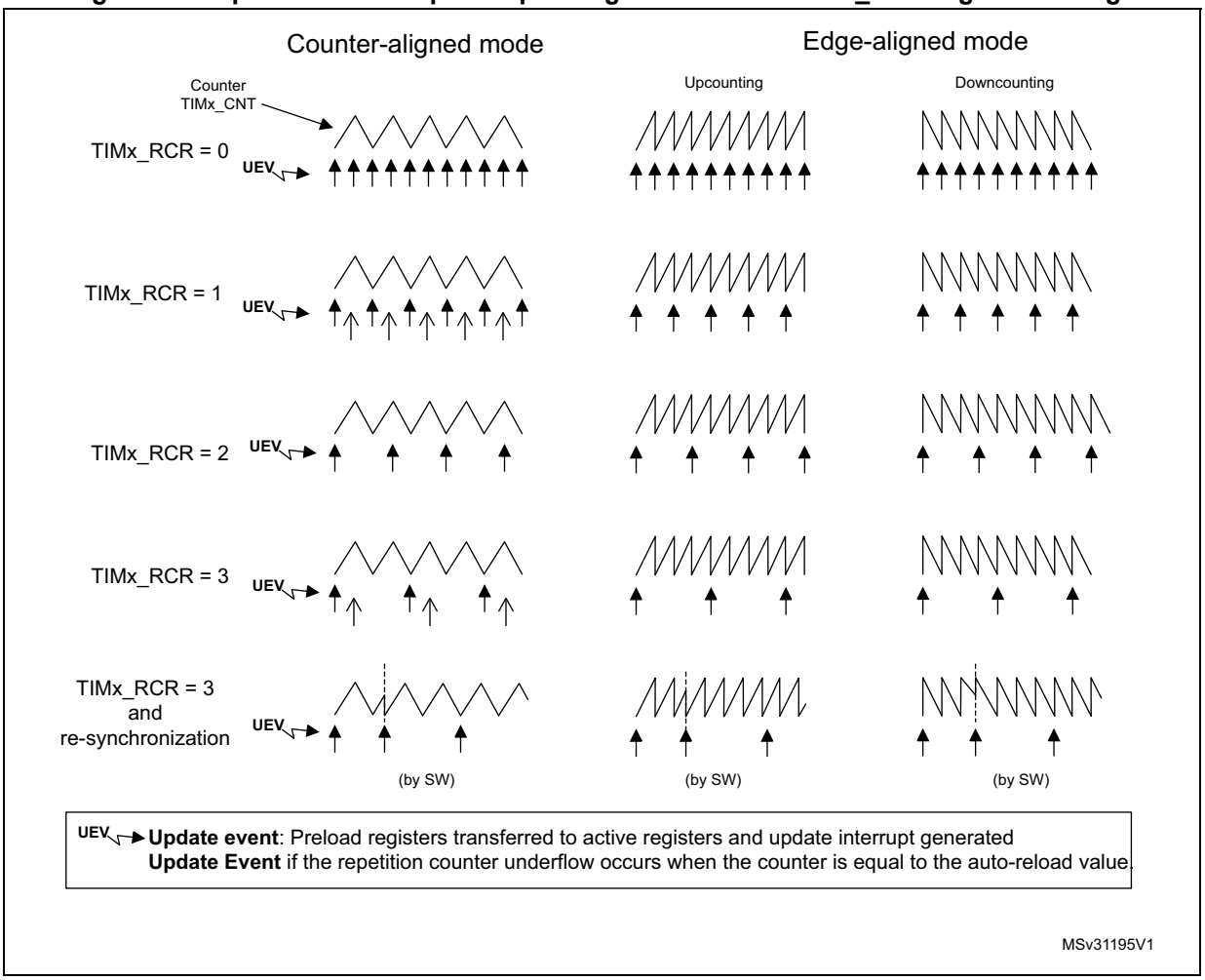

30.3.4 External trigger input

The timer features an external trigger input ETR. It can be used as:

- external clock (external clock mode 2, see *Section 30.3.5*)
- trigger for the slave mode (see *Section 30.3.26*)
- PWM reset input for cycle-by-cycle current regulation (see *Section 30.3.7*)

Figure 244 below describes the ETR input conditioning. The input polarity is defined with the ETP bit in TIMxSMCR register. The trigger can be prescaled with the divider programmed by the ETPS[1:0] bitfield and digitally filtered with the ETF[3:0] bitfield.

Figure 244. External trigger input block

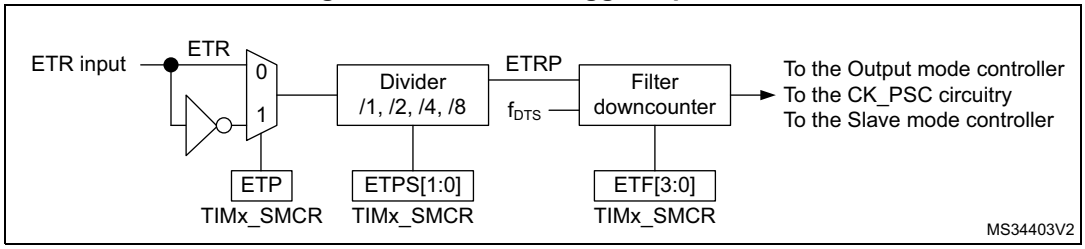

The ETR input comes from multiple sources: input pins (default configuration), comparator outputs and analog watchdogs. The selection is done with:

- the ETRSEL[2:0] bitfield in the TIMx_OR2 register
- the ETR_ADC1_RMP bitfield in the TIMxOR1[1:0] register
- the ETR_ADC3_RMP bitfield in the TIMxOR1[3:2] register.

Figure 245. TIM1 ETR input circuitry

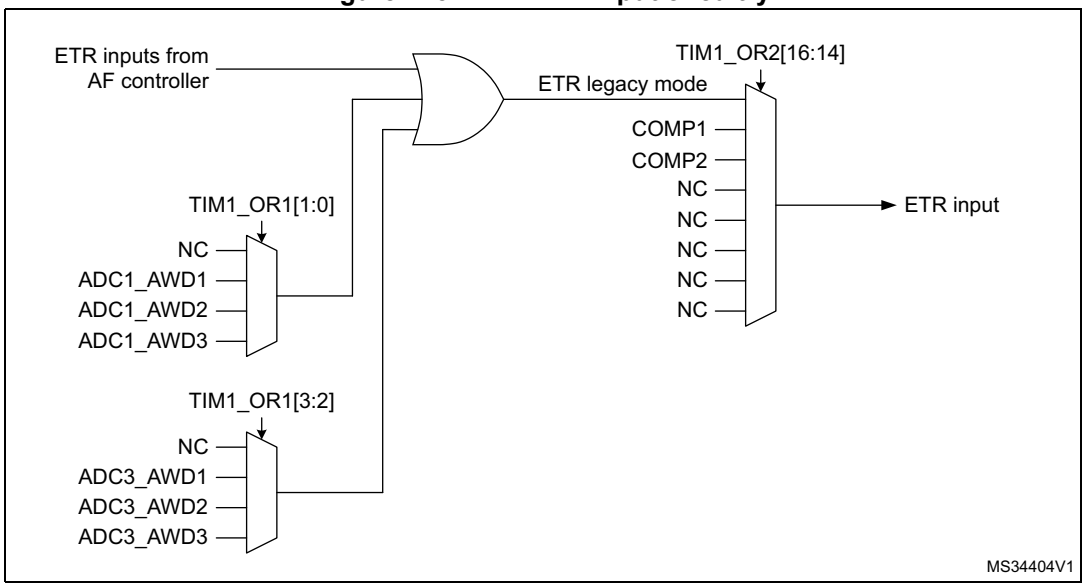

Figure 246. TIM8 ETR input circuitry

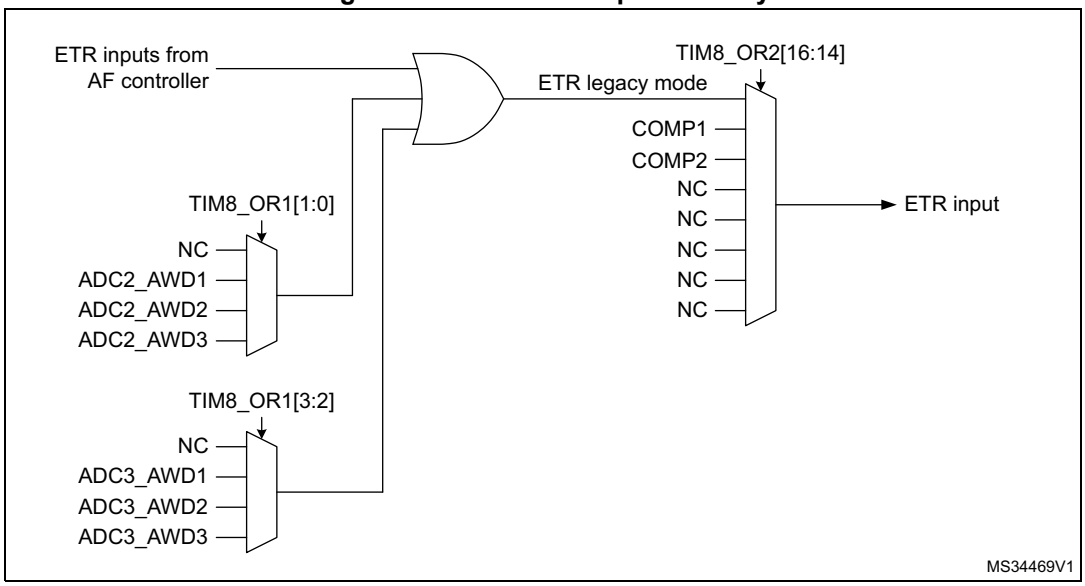

30.3.5 Clock selection

The counter clock can be provided by the following clock sources:

- Internal clock (CK_INT)
- External clock mode1: external input pin
- External clock mode2: external trigger input ETR
- Encoder mode

Internal clock source (CK_INT)

If the slave mode controller is disabled (SMS=000), then the CEN, DIR (in the TIMx_CR1 register) and UG bits (in the TIMx_EGR register) are actual control bits and can be changed only by software (except UG which remains cleared automatically). As soon as the CEN bit is written to 1, the prescaler is clocked by the internal clock CK_INT.

Figure 247 shows the behavior of the control circuit and the upcounter in normal mode, without prescaler.

Figure 247. Control circuit in normal mode, internal clock divided by 1

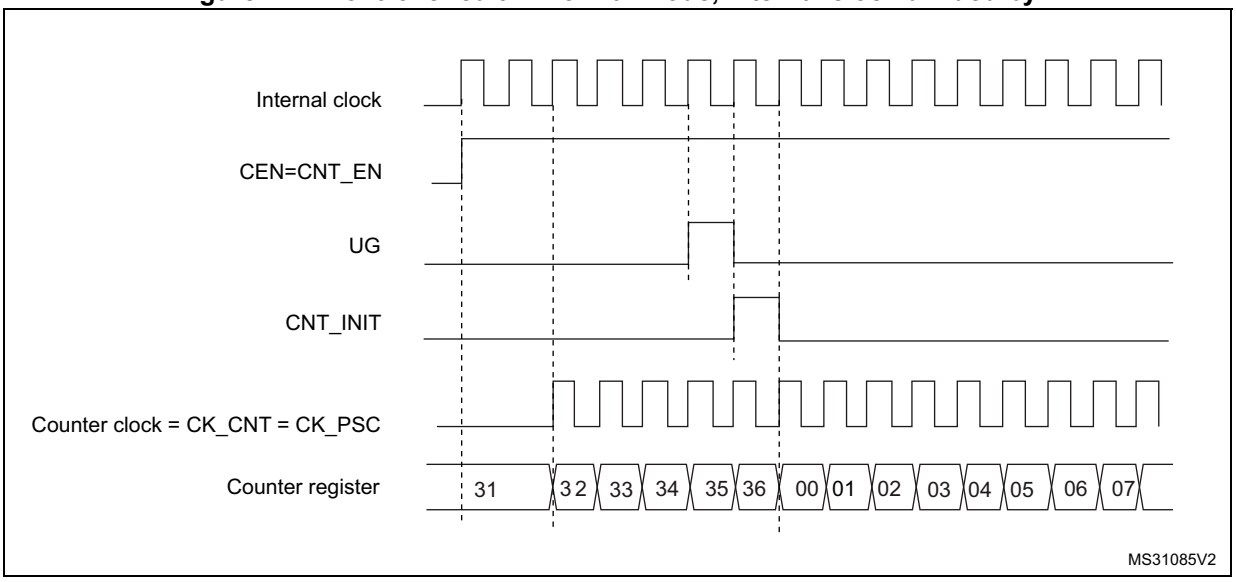

External clock source mode 1

This mode is selected when SMS=111 in the TIMx_SMCR register. The counter can count at each rising or falling edge on a selected input.

Figure 248. TI2 external clock connection example

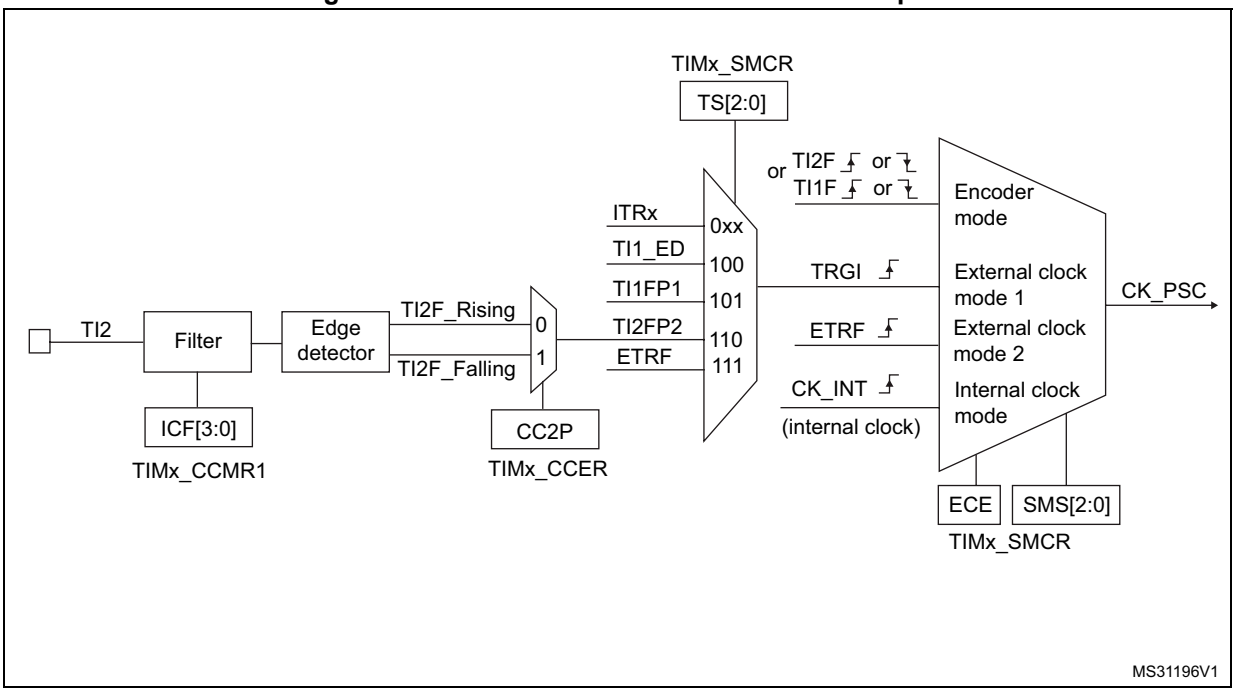

For example, to configure the upcounter to count in response to a rising edge on the TI2 input, use the following procedure:

1. Configure channel 2 to detect rising edges on the TI2 input by writing CC2S = ‘01’ in the TIMx_CCMR1 register.
2. Configure the input filter duration by writing the IC2F[3:0] bits in the TIMx_CCMR1 register (if no filter is needed, keep IC2F=0000).
3. Select rising edge polarity by writing CC2P=0 and CC2NP=0 in the TIMx_CCER register.
4. Configure the timer in external clock mode 1 by writing SMS=111 in the TIMx_SMCR register.
5. Select TI2 as the trigger input source by writing TS=110 in the TIMx_SMCR register.
6. Enable the counter by writing CEN=1 in the TIMx_CR1 register.

Note: The capture prescaler is not used for triggering, so the user does not need to configure it.

When a rising edge occurs on TI2, the counter counts once and the TIF flag is set.

The delay between the rising edge on TI2 and the actual clock of the counter is due to the resynchronization circuit on TI2 input.

Figure 249. Control circuit in external clock mode 1

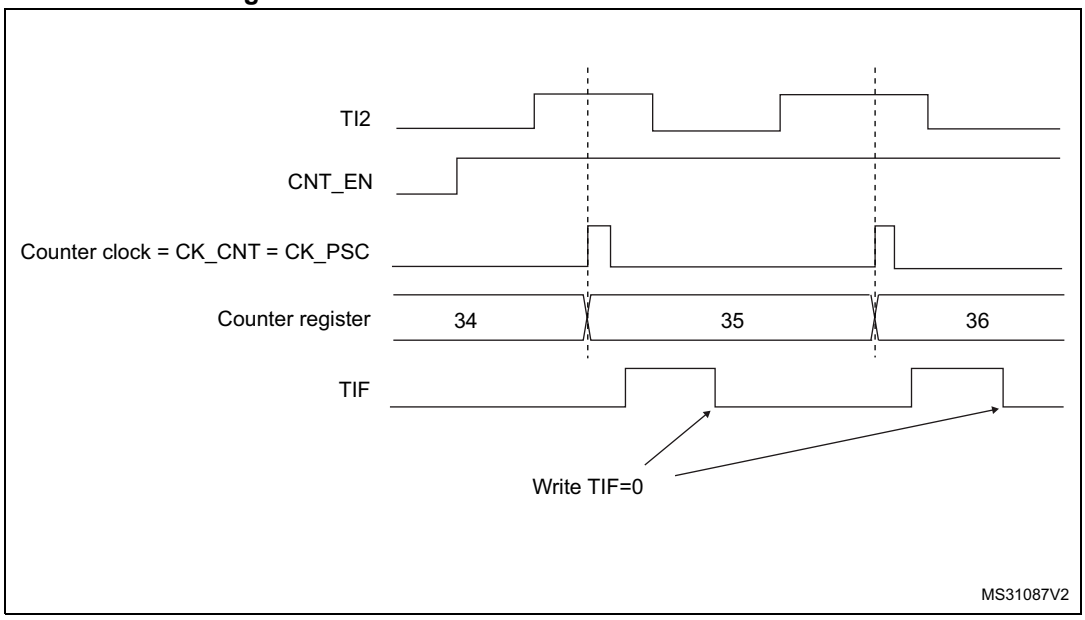

External clock source mode 2

This mode is selected by writing ECE=1 in the TIMx_SMCR register.

The counter can count at each rising or falling edge on the external trigger input ETR.

The *Figure 250* gives an overview of the external trigger input block.

Figure 250. External trigger input block

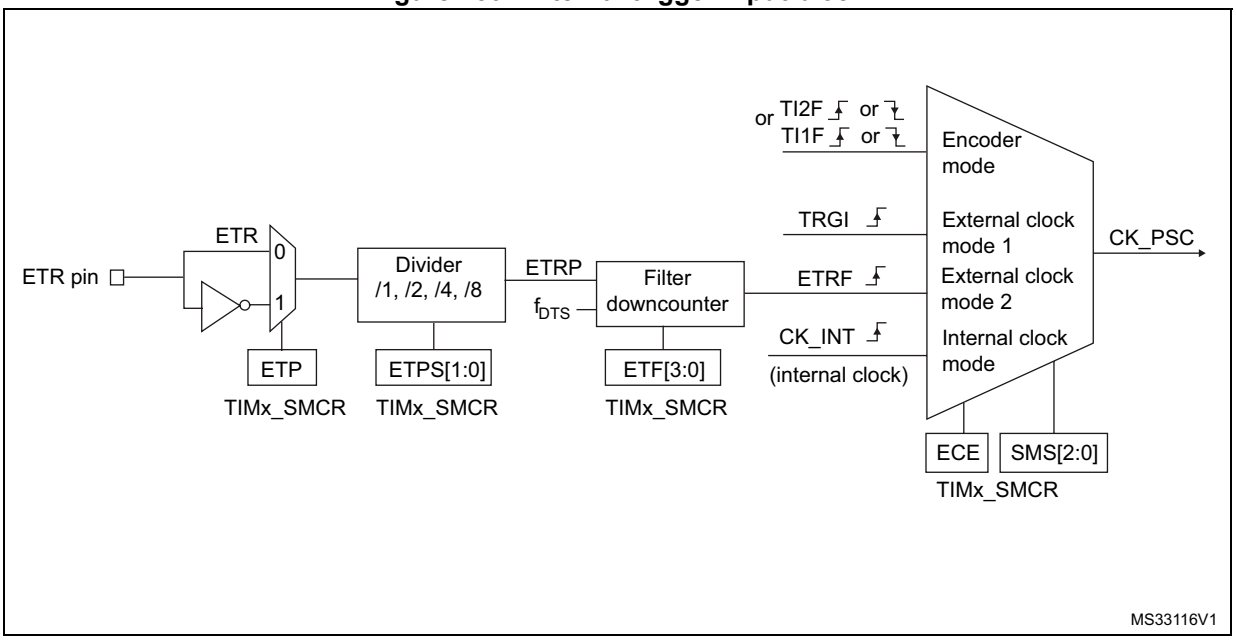

For example, to configure the upcounter to count each 2 rising edges on ETR, use the following procedure:

1. As no filter is needed in this example, write ETF[3:0]=0000 in the TIMx_SMCR register.
2. Set the prescaler by writing ETPS[1:0]=01 in the TIMx_SMCR register
3. Select rising edge detection on the ETR pin by writing ETP=0 in the TIMx_SMCR register
4. Enable external clock mode 2 by writing ECE=1 in the TIMx_SMCR register.
5. Enable the counter by writing CEN=1 in the TIMx_CR1 register.

The counter counts once each 2 ETR rising edges.

The delay between the rising edge on ETR and the actual clock of the counter is due to the resynchronization circuit on the ETRP signal. As a consequence, the maximum frequency which can be correctly captured by the counter is at most ¼ of TIMxCLK frequency. When the ETRP signal is faster, the user should apply a division of the external signal by proper ETPS prescaler setting.

Figure 251. Control circuit in external clock mode 2

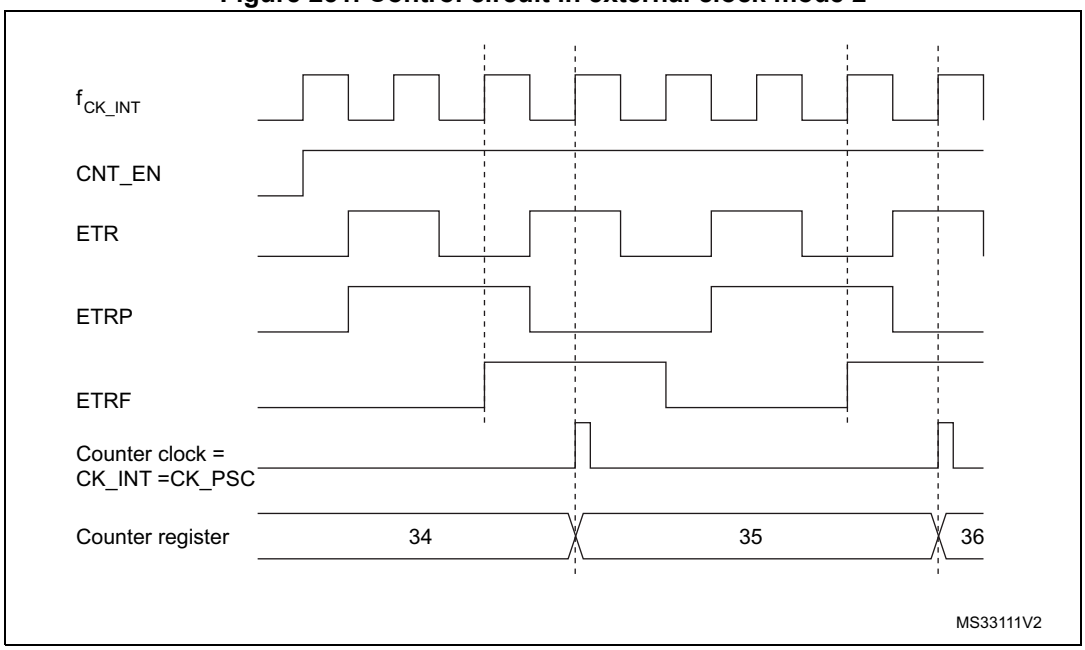

30.3.6 Capture/compare channels

Each Capture/Compare channel is built around a capture/compare register (including a shadow register), an input stage for capture (with digital filter, multiplexing, and prescaler, except for channels 5 and 6) and an output stage (with comparator and output control).

Figure 252 to *Figure 255* give an overview of one Capture/Compare channel.

The input stage samples the corresponding TIx input to generate a filtered signal TIxF. Then, an edge detector with polarity selection generates a signal (TIxFPx) which can be used as trigger input by the slave mode controller or as the capture command. It is prescaled before the capture register (ICxPS).

Figure 252. Capture/compare channel (example: channel 1 input stage)

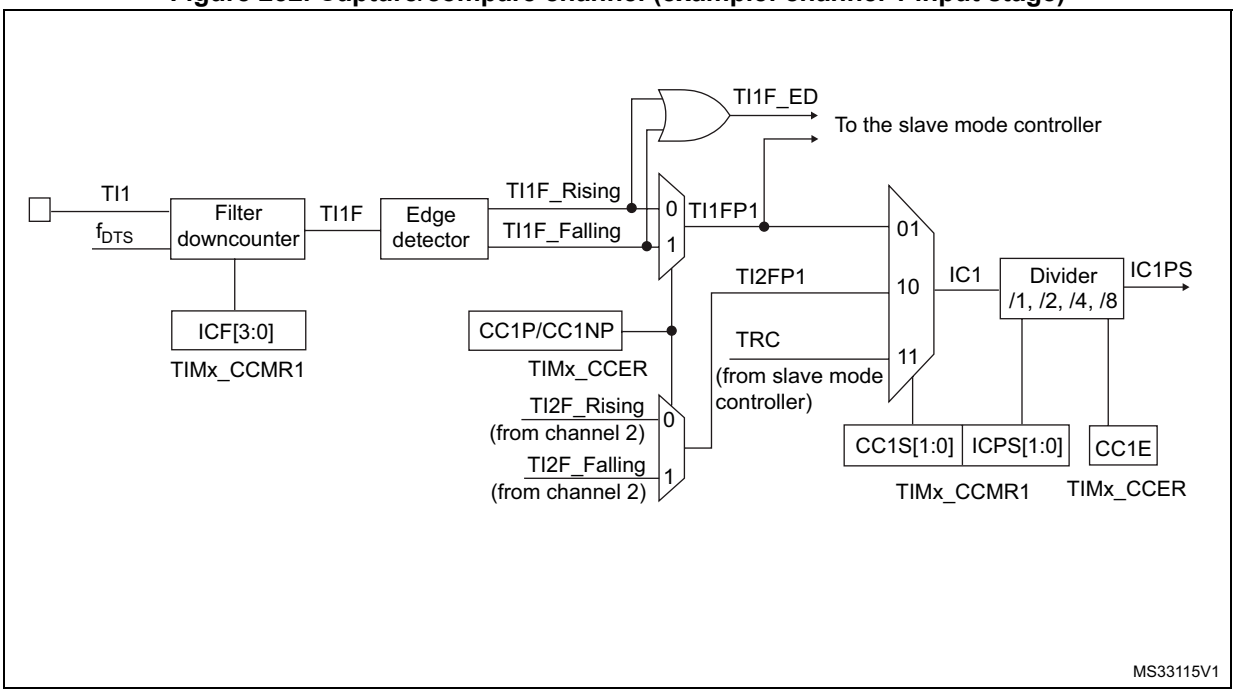

The output stage generates an intermediate waveform which is then used for reference: OCxRef (active high). The polarity acts at the end of the chain.

Figure 253. Capture/compare channel 1 main circuit

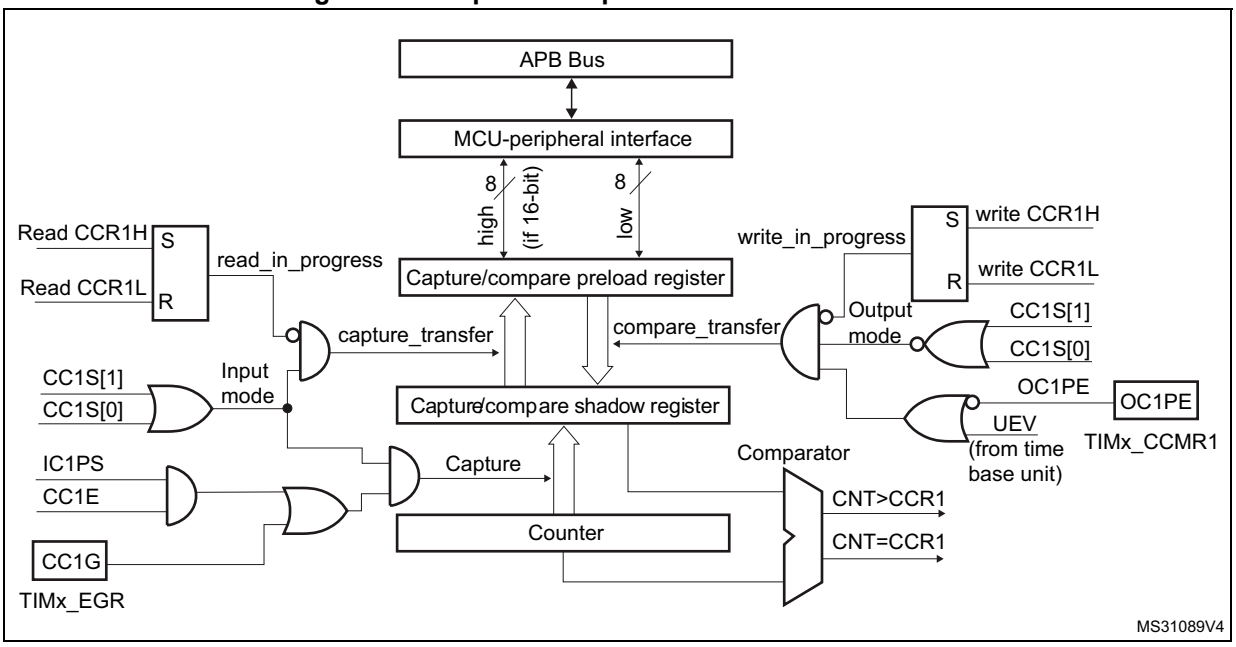

Figure 254. Output stage of capture/compare channel (channel 1, idem ch. 2 and 3)

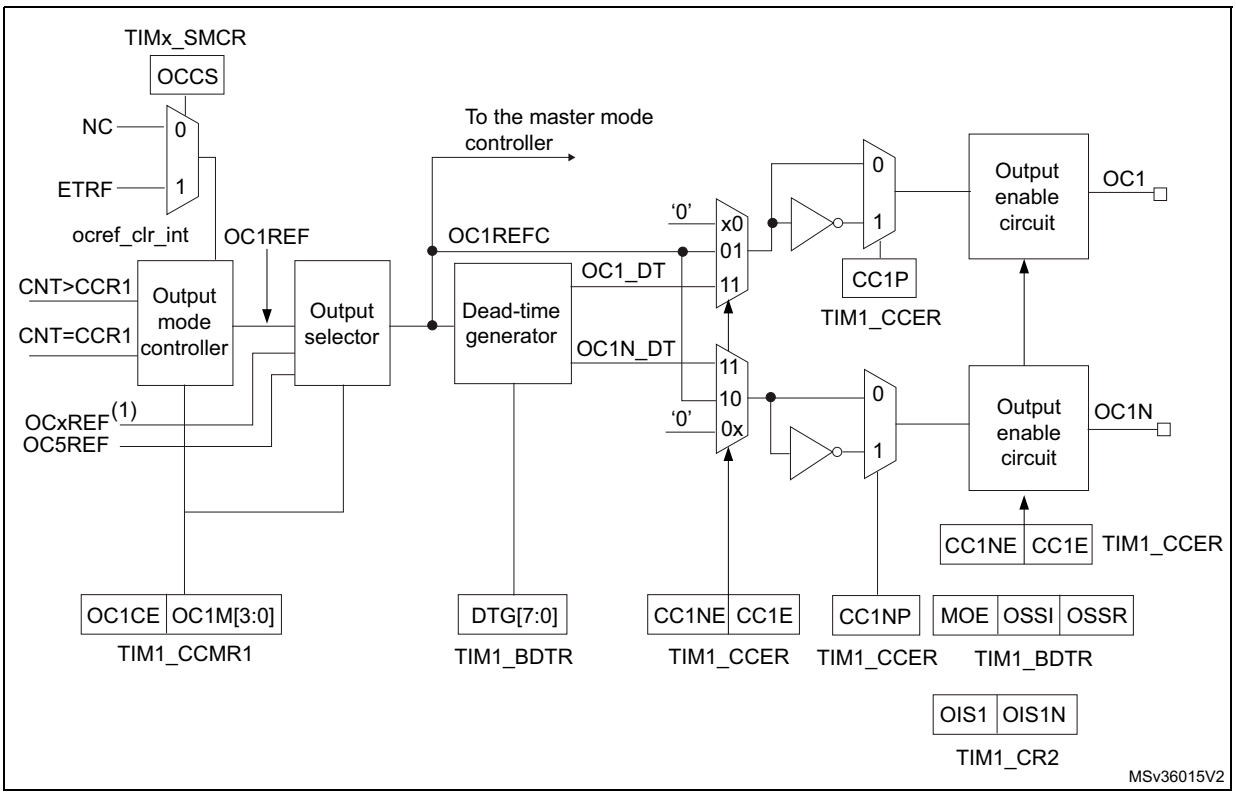

1. OCxREF, where x is the rank of the complementary channel

Figure 255. Output stage of capture/compare channel (channel 4)

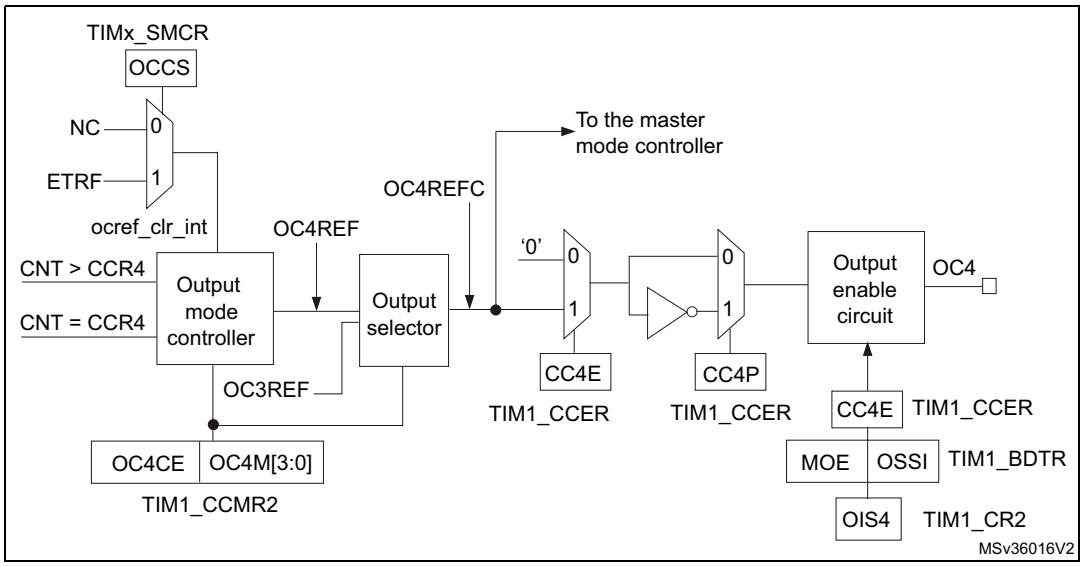

Figure 256. Output stage of capture/compare channel (channel 5, idem ch. 6)

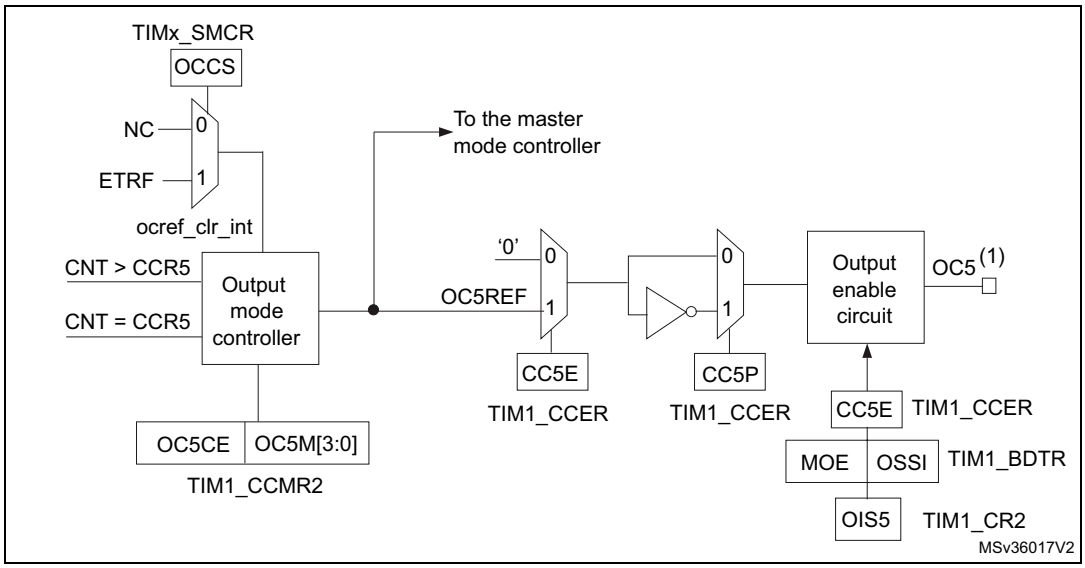

1. Not available externally.

The capture/compare block is made of one preload register and one shadow register. Write and read always access the preload register.

In capture mode, captures are actually done in the shadow register, which is copied into the preload register.

In compare mode, the content of the preload register is copied into the shadow register which is compared to the counter.

30.3.7 Input capture mode

In Input capture mode, the Capture/Compare Registers (TIMx_CCRx) are used to latch the value of the counter after a transition detected by the corresponding ICx signal. When a capture occurs, the corresponding CCXIF flag (TIMx_SR register) is set and an interrupt or a DMA request can be sent if they are enabled. If a capture occurs while the CCxIF flag was already high, then the over-capture flag CCxOF (TIMx_SR register) is set. CCxIF can be cleared by software by writing it to ‘0’ or by reading the captured data stored in the TIMx_CCRx register. CCxOF is cleared when written with ‘0’.

The following example shows how to capture the counter value in TIMx_CCR1 when TI1 input rises. To do this, use the following procedure:

1. Select the active input: TIMx_CCR1 must be linked to the TI1 input, so write the CC1S bits to 01 in the TIMx_CCMR1 register. As soon as CC1S becomes different from 00, the channel is configured in input and the TIMx_CCR1 register becomes read-only.
2. Program the appropriate input filter duration in relation with the signal connected to the timer (when the input is one of the TIx (ICxF bits in the TIMx_CCMRx register). Let’s imagine that, when toggling, the input signal is not stable during at must 5 internal clock cycles. We must program a filter duration longer than these 5 clock cycles. We can validate a transition on TI1 when 8 consecutive samples with the new level have been detected (sampled at f_{DTS} frequency). Then write IC1F bits to 0011 in the TIMx_CCMR1 register.
3. Select the edge of the active transition on the TI1 channel by writing CC1P and CC1NP bits to 0 in the TIMx_CCER register (rising edge in this case).
4. Program the input prescaler. In our example, we wish the capture to be performed at each valid transition, so the prescaler is disabled (write IC1PS bits to ‘00’ in the TIMx_CCMR1 register).
5. Enable capture from the counter into the capture register by setting the CC1E bit in the TIMx_CCER register.
6. If needed, enable the related interrupt request by setting the CC1IE bit in the TIMx_DIER register, and/or the DMA request by setting the CC1DE bit in the TIMx_DIER register.

When an input capture occurs:

- The TIMx_CCR1 register gets the value of the counter on the active transition.
- CC1IF flag is set (interrupt flag). CC1OF is also set if at least two consecutive captures occurred whereas the flag was not cleared.
- An interrupt is generated depending on the CC1IE bit.
- A DMA request is generated depending on the CC1DE bit.

In order to handle the overcapture, it is recommended to read the data before the overcapture flag. This is to avoid missing an overcapture which could happen after reading the flag and before reading the data.

Note: IC interrupt and/or DMA requests can be generated by software by setting the corresponding CCxG bit in the TIMx_EGR register.

30.3.8 PWM input mode

This mode is a particular case of input capture mode. The procedure is the same except:

- Two ICx signals are mapped on the same TIx input.
- These 2 ICx signals are active on edges with opposite polarity.
- One of the two TIxFP signals is selected as trigger input and the slave mode controller is configured in reset mode.

For example, the user can measure the period (in TIMx_CCR1 register) and the duty cycle (in TIMx_CCR2 register) of the PWM applied on TI1 using the following procedure (depending on CK_INT frequency and prescaler value):

1. Select the active input for TIMx_CCR1: write the CC1S bits to 01 in the TIMx_CCMR1 register (TI1 selected).
2. Select the active polarity for TI1FP1 (used both for capture in TIMx_CCR1 and counter clear): write the CC1P and CC1NP bits to ‘0’ (active on rising edge).
3. Select the active input for TIMx_CCR2: write the CC2S bits to 10 in the TIMx_CCMR1 register (TI1 selected).
4. Select the active polarity for TI1FP2 (used for capture in TIMx_CCR2): write the CC2P and CC2NP bits to CC2P/CC2NP=’10’ (active on falling edge).
5. Select the valid trigger input: write the TS bits to 101 in the TIMx_SMCR register (TI1FP1 selected).
6. Configure the slave mode controller in reset mode: write the SMS bits to 0100 in the TIMx_SMCR register.
7. Enable the captures: write the CC1E and CC2E bits to ‘1’ in the TIMx_CCER register.

Figure 257. PWM input mode timing

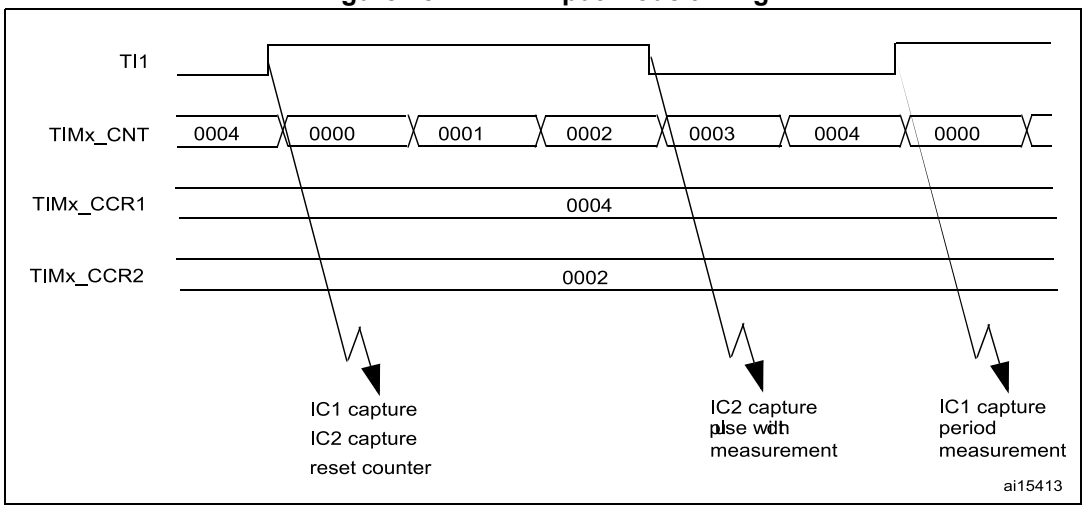

30.3.9 Forced output mode

In output mode (CCxS bits = 00 in the TIMx_CCMRx register), each output compare signal (OCxREF and then OCx/OCxN) can be forced to active or inactive level directly by software, independently of any comparison between the output compare register and the counter.

To force an output compare signal (OCXREF/OCx) to its active level, user just needs to write 0101 in the OCxM bits in the corresponding TIMx_CCMRx register. Thus OCXREF is

forced high (OCxREF is always active high) and OCx get opposite value to CCxP polarity bit.

For example: CCxP=0 (OCx active high) => OCx is forced to high level.

The OCxREF signal can be forced low by writing the OCxM bits to 0100 in the TIMx_CCMRx register.

Anyway, the comparison between the TIMx_CCRx shadow register and the counter is still performed and allows the flag to be set. Interrupt and DMA requests can be sent accordingly. This is described in the output compare mode section below.

30.3.10 Output compare mode

This function is used to control an output waveform or indicate when a period of time has elapsed. Channels 1 to 4 can be output, while Channel 5 and 6 are only available inside the device (for instance, for compound waveform generation or for ADC triggering).

When a match is found between the capture/compare register and the counter, the output compare function:

- Assigns the corresponding output pin to a programmable value defined by the output compare mode (OCxM bits in the TIMx_CCMRx register) and the output polarity (CCxP bit in the TIMx_CCER register). The output pin can keep its level (OCXM=0000), be set active (OCxM=0001), be set inactive (OCxM=0010) or can toggle (OCxM=0011) on match.
- Sets a flag in the interrupt status register (CCxIF bit in the TIMx_SR register).
- Generates an interrupt if the corresponding interrupt mask is set (CCXIE bit in the TIMx_DIER register).
- Sends a DMA request if the corresponding enable bit is set (CCxDE bit in the TIMx_DIER register, CCDS bit in the TIMx_CR2 register for the DMA request selection).

The TIMx_CCRx registers can be programmed with or without preload registers using the OCxPE bit in the TIMx_CCMRx register.

In output compare mode, the update event UEV has no effect on OCxREF and OCx output. The timing resolution is one count of the counter. Output compare mode can also be used to output a single pulse (in One Pulse mode).

Procedure

1. Select the counter clock (internal, external, prescaler).
2. Write the desired data in the TIMx_ARR and TIMx_CCRx registers.
3. Set the CCxIE bit if an interrupt request is to be generated.
4. Select the output mode. For example:
   - Write OCxM = 0011 to toggle OCx output pin when CNT matches CCRx
   - Write OCxPE = 0 to disable preload register
   - Write CCxP = 0 to select active high polarity
   - Write CCxE = 1 to enable the output
5. Enable the counter by setting the CEN bit in the TIMx_CR1 register.

The TIMx_CCRx register can be updated at any time by software to control the output waveform, provided that the preload register is not enabled (OCxPE='0', else TIMx_CCRx

shadow register is updated only at the next update event UEV). An example is given in *Figure 258*.

Figure 258. Output compare mode, toggle on OC1

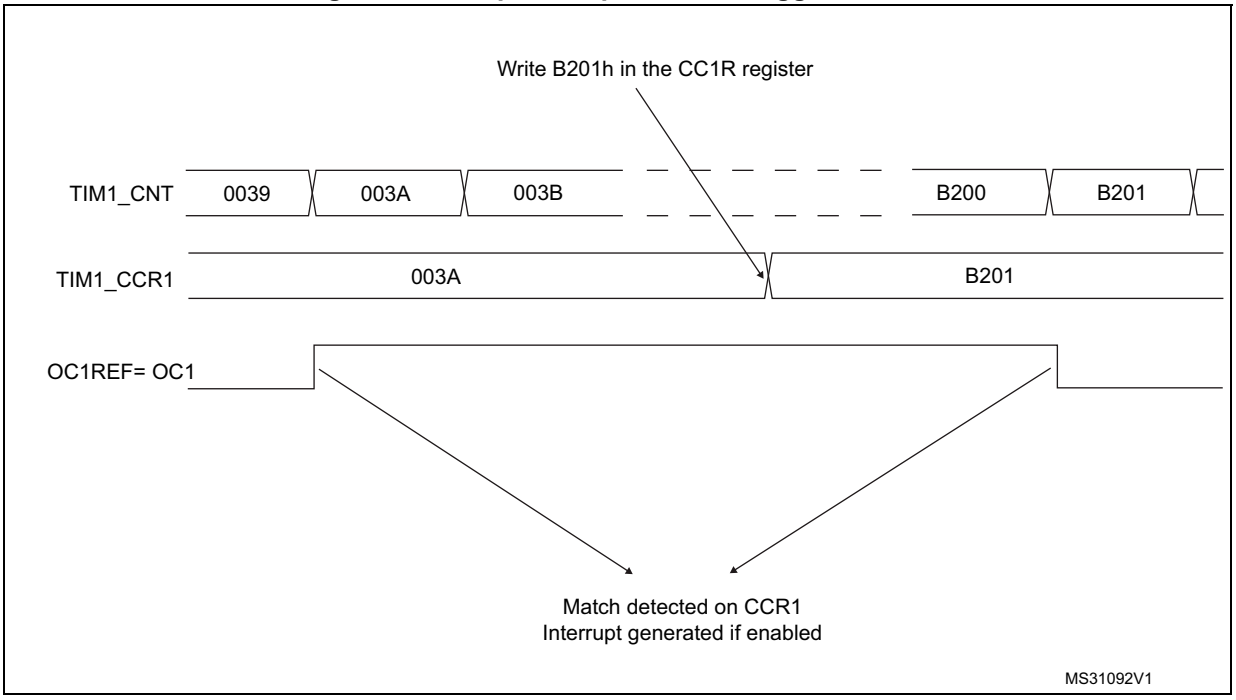

30.3.11 PWM mode

Pulse Width Modulation mode allows a signal to be generated with a frequency determined by the value of the TIMx_ARR register and a duty cycle determined by the value of the TIMx_CCRx register.

The PWM mode can be selected independently on each channel (one PWM per OCx output) by writing ‘0110’ (PWM mode 1) or ‘0111’ (PWM mode 2) in the OCxM bits in the TIMx_CCMRx register. The corresponding preload register must be enabled by setting the OCxPE bit in the TIMx_CCMRx register, and eventually the auto-reload preload register (in upcounting or center-aligned modes) by setting the ARPE bit in the TIMx_CR1 register.

As the preload registers are transferred to the shadow registers only when an update event occurs, before starting the counter, all registers must be initialized by setting the UG bit in the TIMx_EGR register.

OCx polarity is software programmable using the CCxP bit in the TIMx_CCER register. It can be programmed as active high or active low. OCx output is enabled by a combination of the CCxE, CCxNE, MOE, OSSI and OSSR bits (TIMx_CCER and TIMx_BDTR registers). Refer to the TIMx_CCER register description for more details.

In PWM mode (1 or 2), TIMx_CNT and TIMx_CCRx are always compared to determine whether TIMx_CCRx ≤ TIMx_CNT or TIMx_CNT ≤ TIMx_CCRx (depending on the direction of the counter).

The timer is able to generate PWM in edge-aligned mode or center-aligned mode depending on the CMS bits in the TIMx_CR1 register.

PWM edge-aligned mode

- Upcounting configuration

  Upcounting is active when the DIR bit in the TIMx_CR1 register is low. Refer to the *Upcounting mode on page 913*.

  In the following example, we consider PWM mode 1. The reference PWM signal OCxREF is high as long as TIMx_CNT < TIMx_CCRx else it becomes low. If the compare value in TIMx_CCRx is greater than the auto-reload value (in TIMx_ARR) then OCxREF is held at ‘1’. If the compare value is 0 then OCxRef is held at ‘0’. *Figure 259* shows some edge-aligned PWM waveforms in an example where TIMx_ARR=8.

Figure 259. Edge-aligned PWM waveforms (ARR=8)

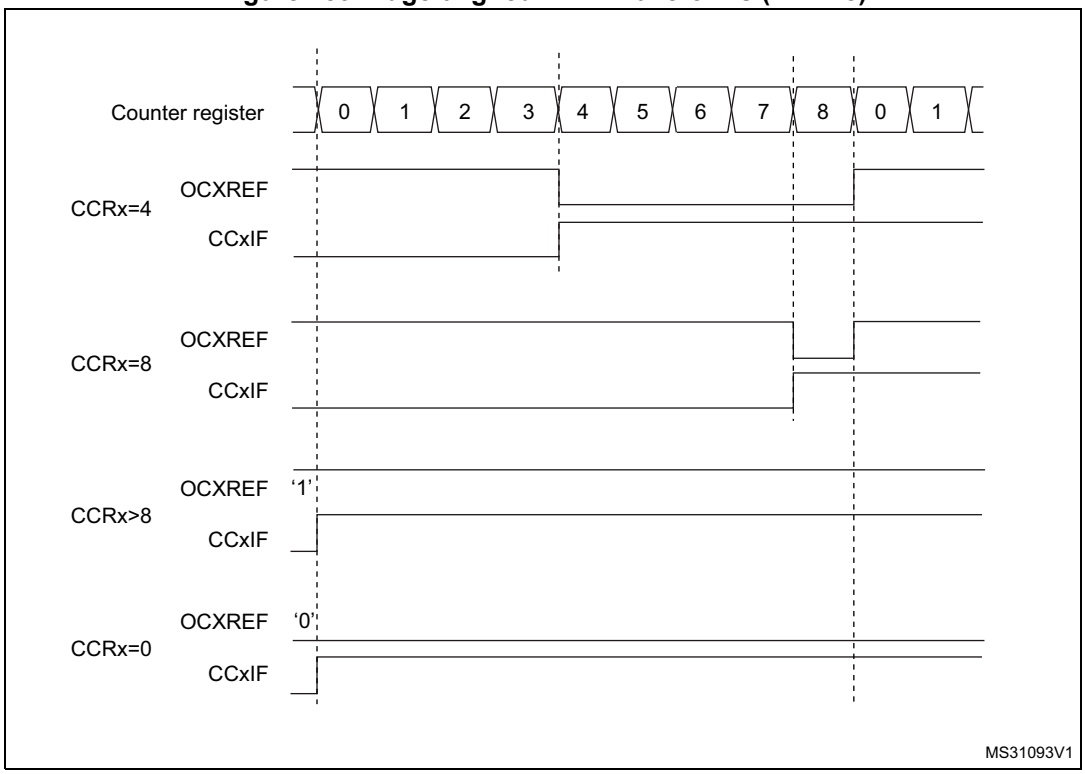

- Downcounting configuration

  Downcounting is active when DIR bit in TIMx_CR1 register is high. Refer to the *Downcounting mode on page 917*

  In PWM mode 1, the reference signal OCxRef is low as long as TIMx_CNT > TIMx_CCRx else it becomes high. If the compare value in TIMx_CCRx is greater than the auto-reload value in TIMx_ARR, then OCxREF is held at ‘1’. 0% PWM is not possible in this mode.

PWM center-aligned mode

Center-aligned mode is active when the CMS bits in TIMx_CR1 register are different from ‘00’ (all the remaining configurations having the same effect on the OCxRef/OCx signals). The compare flag is set when the counter counts up, when it counts down or both when it counts up and down depending on the CMS bits configuration. The direction bit (DIR) in the

TIMx_CR1 register is updated by hardware and must not be changed by software. Refer to the *Center-aligned mode (up/down counting) on page 920*.

Figure 260 shows some center-aligned PWM waveforms in an example where:

- TIMx_ARR=8,
- PWM mode is the PWM mode 1,
- The flag is set when the counter counts down corresponding to the center-aligned mode 1 selected for CMS=01 in TIMx_CR1 register.

Figure 260. Center-aligned PWM waveforms (ARR=8)

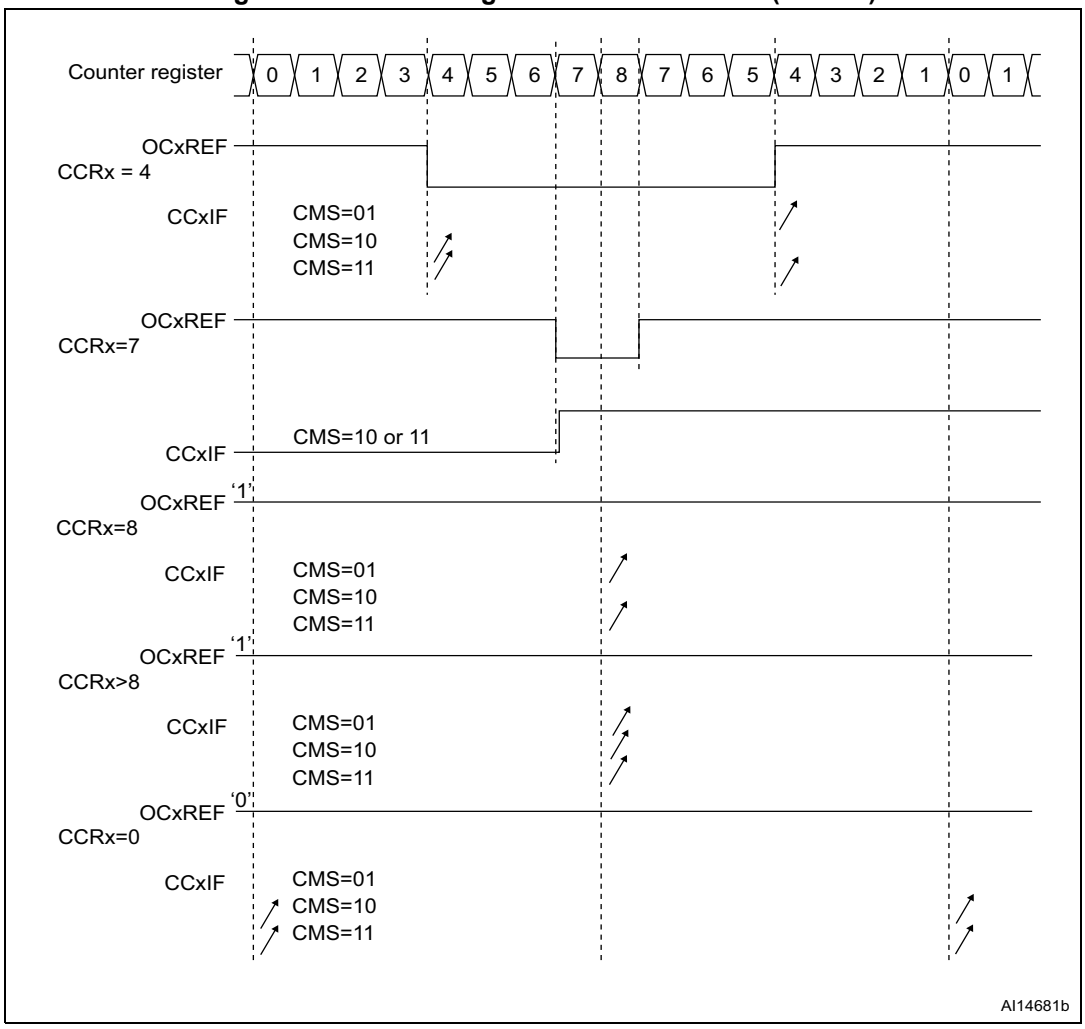

Hints on using center-aligned mode

- When starting in center-aligned mode, the current up-down configuration is used. It means that the counter counts up or down depending on the value written in the DIR bit

in the TIMx_CR1 register. Moreover, the DIR and CMS bits must not be changed at the same time by the software.

- Writing to the counter while running in center-aligned mode is not recommended as it can lead to unexpected results. In particular:
  - The direction is not updated if a value greater than the auto-reload value is written in the counter (TIMx_CNT>TIMx_ARR). For example, if the counter was counting up, it continues to count up.
  - The direction is updated if 0 or the TIMx_ARR value is written in the counter but no Update Event UEV is generated.
- The safest way to use center-aligned mode is to generate an update by software (setting the UG bit in the TIMx_EGR register) just before starting the counter and not to write the counter while it is running.

30.3.12 Asymmetric PWM mode

Asymmetric mode allows two center-aligned PWM signals to be generated with a programmable phase shift. While the frequency is determined by the value of the TIMx_ARR register, the duty cycle and the phase-shift are determined by a pair of TIMx_CCRx register. One register controls the PWM during up-counting, the second during down counting, so that PWM is adjusted every half PWM cycle:

- OC1REFC (or OC2REFC) is controlled by TIMx_CCR1 and TIMx_CCR2
- OC3REFC (or OC4REFC) is controlled by TIMx_CCR3 and TIMx_CCR4

Asymmetric PWM mode can be selected independently on two channel (one OCx output per pair of CCR registers) by writing ‘1110’ (Asymmetric PWM mode 1) or ‘1111’ (Asymmetric PWM mode 2) in the OCxM bits in the TIMx_CCMRx register.

Note: The OCxM[3:0] bit field is split into two parts for compatibility reasons, the most significant bit is not contiguous with the 3 least significant ones.

When a given channel is used as asymmetric PWM channel, its complementary channel can also be used. For instance, if an OC1REFC signal is generated on channel 1 (Asymmetric PWM mode 1), it is possible to output either the OC2REF signal on channel 2, or an OC2REFC signal resulting from asymmetric PWM mode 1.

Figure 261 represents an example of signals that can be generated using Asymmetric PWM mode (channels 1 to 4 are configured in Asymmetric PWM mode 1). Together with the deadtime generator, this allows a full-bridge phase-shifted DC to DC converter to be controlled.

Figure 261. Generation of 2 phase-shifted PWM signals with 50% duty cycle

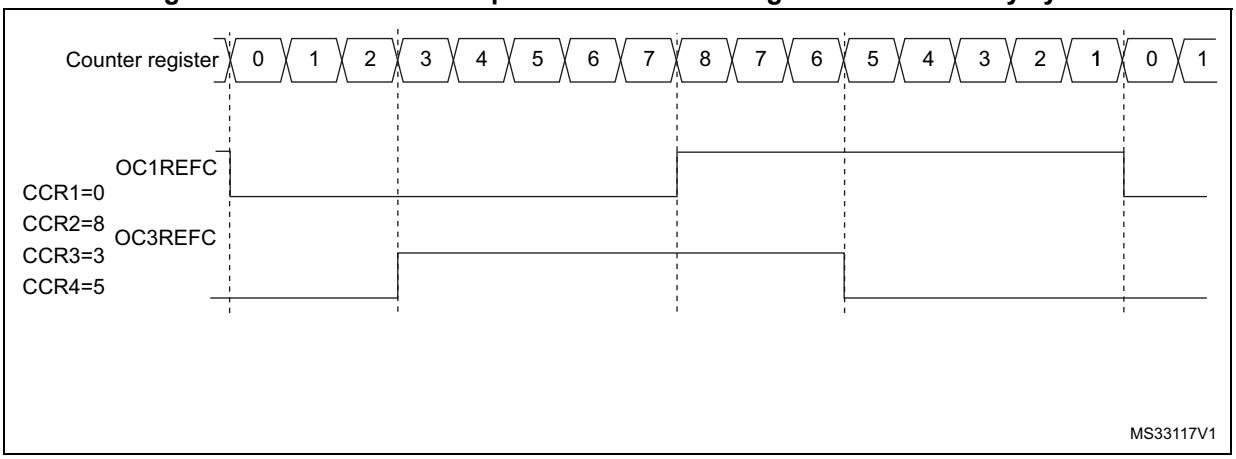

30.3.13 Combined PWM mode

Combined PWM mode allows two edge or center-aligned PWM signals to be generated with programmable delay and phase shift between respective pulses. While the frequency is determined by the value of the TIMx_ARR register, the duty cycle and delay are determined by the two TIMx_CCRx registers. The resulting signals, OCxREFC, are made of an OR or AND logical combination of two reference PWMs:

- OC1REFC (or OC2REFC) is controlled by TIMx_CCR1 and TIMx_CCR2
- OC3REFC (or OC4REFC) is controlled by TIMx_CCR3 and TIMx_CCR4

Combined PWM mode can be selected independently on two channels (one OCx output per pair of CCR registers) by writing ‘1100’ (Combined PWM mode 1) or ‘1101’ (Combined PWM mode 2) in the OCxM bits in the TIMx_CCMRx register.

When a given channel is used as combined PWM channel, its complementary channel must be configured in the opposite PWM mode (for instance, one in Combined PWM mode 1 and the other in Combined PWM mode 2).

Note: The OCxM[3:0] bit field is split into two parts for compatibility reasons, the most significant bit is not contiguous with the 3 least significant ones.

Figure 262 represents an example of signals that can be generated using Asymmetric PWM mode, obtained with the following configuration:

- Channel 1 is configured in Combined PWM mode 2,
- Channel 2 is configured in PWM mode 1,
- Channel 3 is configured in Combined PWM mode 2,
- Channel 4 is configured in PWM mode 1.

Figure 262. Combined PWM mode on channel 1 and 3

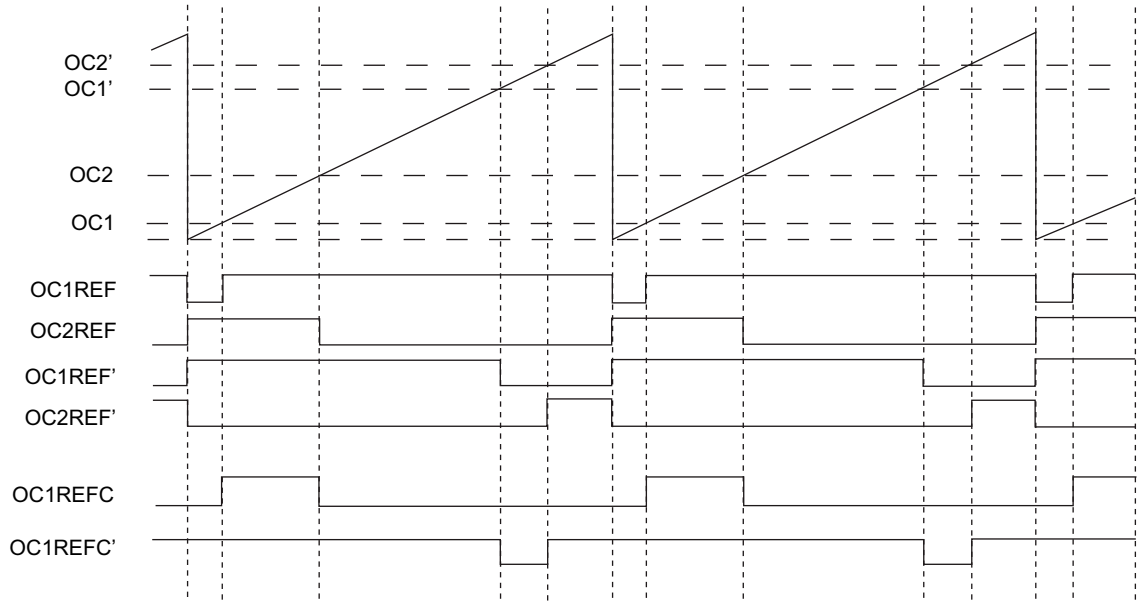

30.3.14 Combined 3-phase PWM mode

Combined 3-phase PWM mode allows one to three center-aligned PWM signals to be generated with a single programmable signal ANDed in the middle of the pulses. The OC5REF signal is used to define the resulting combined signal. The 3-bits GC5C[3:1] in the TIMx_CCR5 allow selection on which reference signal the OC5REF is combined. The resulting signals, OCxREFC, are made of an AND logical combination of two reference PWMs:

- If GC5C1 is set, OC1REFC is controlled by TIMx_CCR1 and TIMx_CCR5
- If GC5C2 is set, OC2REFC is controlled by TIMx_CCR2 and TIMx_CCR5
- If GC5C3 is set, OC3REFC is controlled by TIMx_CCR3 and TIMx_CCR5

Combined 3-phase PWM mode can be selected independently on channels 1 to 3 by setting at least one of the 3-bits GC5C[3:1].

Figure 263. 3-phase combined PWM signals with multiple trigger pulses per period

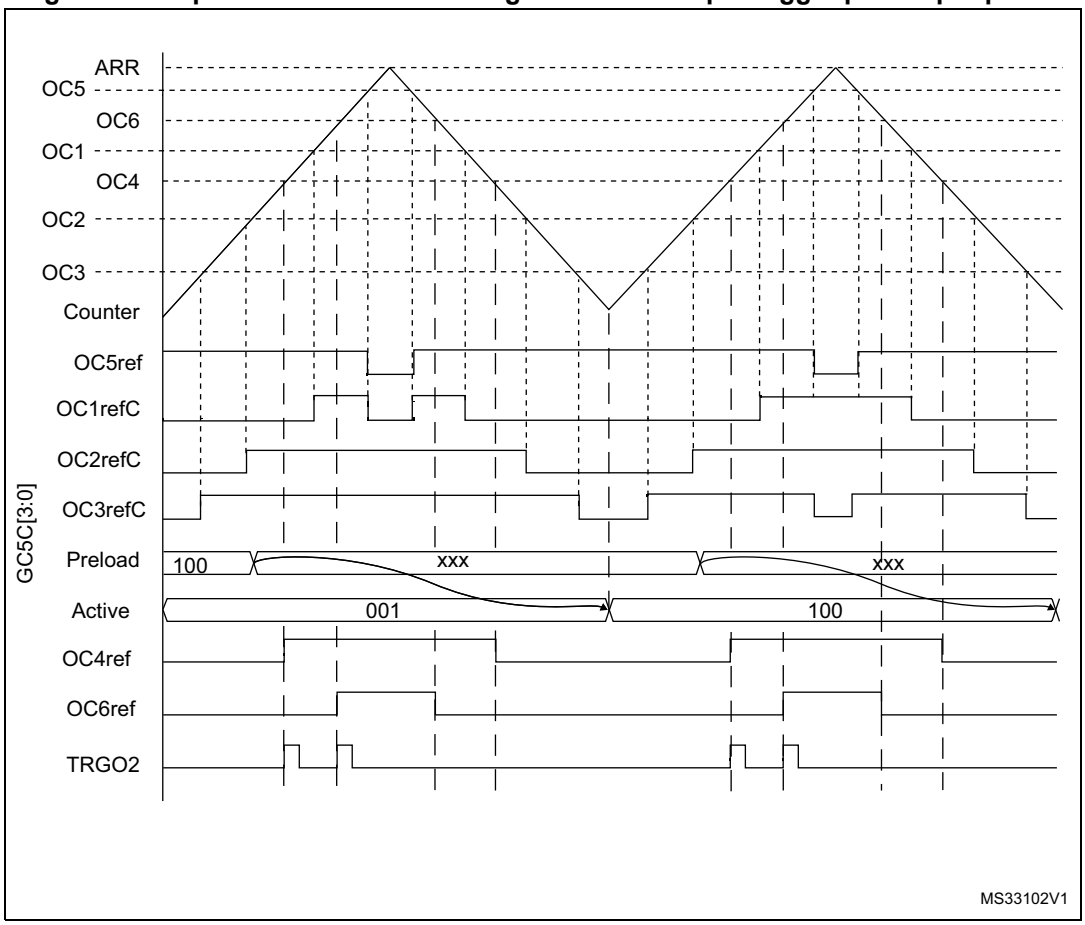

The TRGO2 waveform shows how the ADC can be synchronized on given 3-phase PWM signals. Refer to *Section 30.3.27: ADC synchronization* for more details.

30.3.15 Complementary outputs and dead-time insertion

The advanced-control timers (TIM1/TIM8) can output two complementary signals and manage the switching-off and the switching-on instants of the outputs.

This time is generally known as dead-time and it has to be adjusted depending on the devices that are connected to the outputs and their characteristics (intrinsic delays of level-shifters, delays due to power switches...)

The polarity of the outputs (main output OCx or complementary OCxN) can be selected independently for each output. This is done by writing to the CCxP and CCxNP bits in the TIMx_CCER register.

The complementary signals OCx and OCxN are activated by a combination of several control bits: the CCxE and CCxNE bits in the TIMx_CCER register and the MOE, OISx, OISxN, OSSI and OSSR bits in the TIMx_BDTR and TIMx_CR2 registers. Refer to *Table 198: Output control bits for complementary OCx and OCxN channels with break feature on page 989* for more details. In particular, the dead-time is activated when switching to the idle state (MOE falling down to 0).

Dead-time insertion is enabled by setting both CCxE and CCxNE bits, and the MOE bit if the break circuit is present. There is one 10-bit dead-time generator for each channel. From a reference waveform OCxREF, it generates 2 outputs OCx and OCxN. If OCx and OCxN are active high:

- The OCx output signal is the same as the reference signal except for the rising edge, which is delayed relative to the reference rising edge.
- The OCxN output signal is the opposite of the reference signal except for the rising edge, which is delayed relative to the reference falling edge.

If the delay is greater than the width of the active output (OCx or OCxN) then the corresponding pulse is not generated.

The following figures show the relationships between the output signals of the dead-time generator and the reference signal OCxREF. (we suppose CCxP=0, CCxNP=0, MOE=1, CCxE=1 and CCxNE=1 in these examples)

Figure 264. Complementary output with dead-time insertion

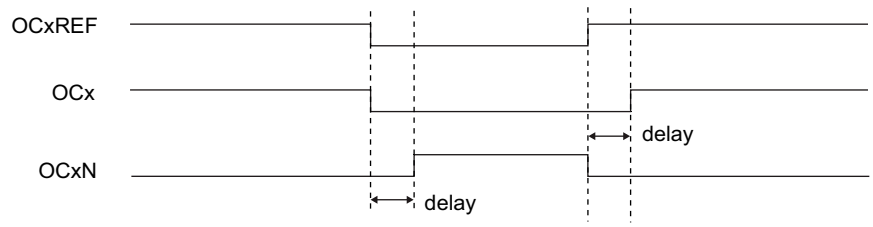

Figure 265. Dead-time waveforms with delay greater than the negative pulse

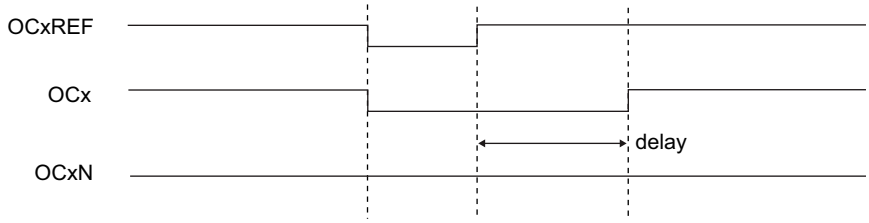

Figure 266. Dead-time waveforms with delay greater than the positive pulse

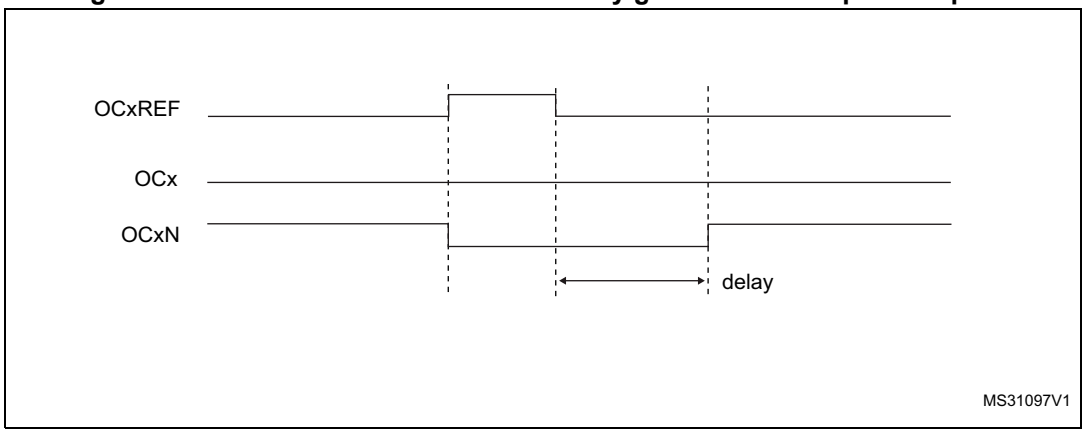

The dead-time delay is the same for each of the channels and is programmable with the DTG bits in the TIMx_BDTR register. Refer to *Section 30.4.20: TIMx break and dead-time register (TIMx_BDTR)(x = 1, 8)* for delay calculation.

Re-directing OCxREF to OCx or OCxN

In output mode (forced, output compare or PWM), OCxREF can be re-directed to the OCx output or to OCxN output by configuring the CCxE and CCxNE bits in the TIMx_CCER register.

This allows a specific waveform to be sent (such as PWM or static active level) on one output while the complementary remains at its inactive level. Other alternative possibilities are to have both outputs at inactive level or both outputs active and complementary with dead-time.

Note: When only OCxN is enabled (CCxE=0, CCxNE=1), it is not complemented and becomes active as soon as OCxREF is high. For example, if CCxNP=0 then OCxN=OCxRef. On the other hand, when both OCx and OCxN are enabled (CCxE=CCxNE=1) OCx becomes active when OCxREF is high whereas OCxN is complemented and becomes active when OCxREF is low.

30.3.16 Using the break function

The purpose of the break function is to protect power switches driven by PWM signals generated with the TIM1 and TIM8 timers. The two break inputs are usually connected to fault outputs of power stages and 3-phase inverters. When activated, the break circuitry shuts down the PWM outputs and forces them to a predefined safe state. A number of internal MCU events can also be selected to trigger an output shut-down.

The break features two channels. A break channel which gathers both system-level fault (clock failure, parity error,...) and application fault (from input pins and built-in comparator), and can force the outputs to a predefined level (either active or inactive) after a deadtime duration. A break2 channel which only includes application faults and is able to force the outputs to an inactive state.

The output enable signal and output levels during break are depending on several control bits:

- the MOE bit in TIMx_BDTR register allows the outputs to be enabled/disabled by software and is reset in case of break or break2 event.
- the OSSI bit in the TIMx_BDTR register defines whether the timer controls the output in inactive state or releases the control to the GPIO controller (typically to have it in Hi-Z mode)
- the OISx and OISxN bits in the TIMx_CR2 register which are setting the output shut-down level, either active or inactive. The OCx and OCxN outputs cannot be set both to active level at a given time, whatever the OISx and OISxN values. Refer to *Table 198: Output control bits for complementary OCx and OCxN channels with break feature on page 989* for more details.

When exiting from reset, the break circuit is disabled and the MOE bit is low. The break functions can be enabled by setting the BKE and BK2E bits in the TIMx_BDTR register. The break input polarities can be selected by configuring the BKP and BK2P bits in the same register. BKE/BK2E and BKP/BK2P can be modified at the same time. When the BKE/BK2E and BKP/BK2P bits are written, a delay of 1 APB clock cycle is applied before the writing is effective. Consequently, it is necessary to wait 1 APB clock period to correctly read back the bit after the write operation.

Because MOE falling edge can be asynchronous, a resynchronization circuit has been inserted between the actual signal (acting on the outputs) and the synchronous control bit (accessed in the TIMx_BDTR register). It results in some delays between the asynchronous and the synchronous signals. In particular, if MOE is set to 1 whereas it was low, a delay must be inserted (dummy instruction) before reading it correctly. This is because the write acts on the asynchronous signal whereas the read reflects the synchronous signal.

The break can be generated from multiple sources which can be individually enabled and with programmable edge sensitivity, using the TIMx_OR2 and TIMx_OR3 registers.

The sources for break (BRK) channel are:

- An external source connected to one of the BKIN pin (as per selection done in the AFIO controller), with polarity selection and optional digital filtering
- An internal source:
  - the Cortex®-M4 LOCKUP output
  - the PVD output
  - the SRAM parity error signal
  - a flash ECC error
  - a clock failure event generated by the CSS detector
  - the output from a comparator, with polarity selection and optional digital filtering
  - the analog watchdog output of the DFSDM1 peripheral

The sources for break2 (BRK2) are:

- An external source connected to one of the BKIN pin (as per selection done in the AFIO controller), with polarity selection and optional digital filtering
- An internal source coming from a comparator output.

Break events can also be generated by software using BG and B2G bits in the TIMx_EGR register. The software break generation using BG and B2G is active whatever the BKE and BK2E enable bits values.

All sources are ORed before entering the timer BRK or BRK2 inputs, as per *Figure 267* below.

Figure 267. Break and Break2 circuitry overview

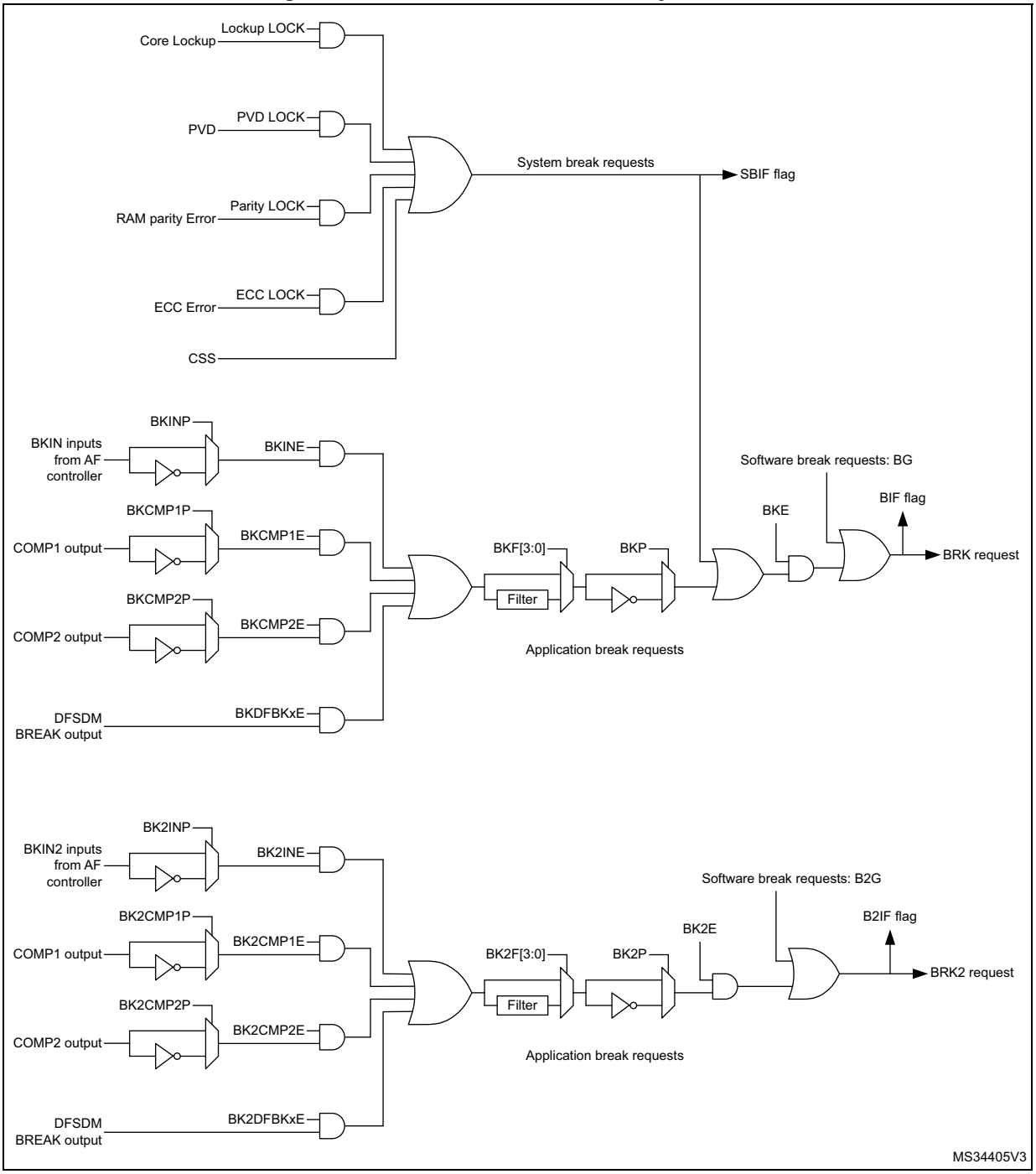

Note: An asynchronous (clockless) operation is only guaranteed when the programmable filter is disabled. If it is enabled, a fail safe clock mode (for example by using the internal PLL and/or the CSS) must be used to guarantee that break events are handled.

When one of the breaks occurs (selected level on one of the break inputs):

- The MOE bit is cleared asynchronously, putting the outputs in inactive state, idle state or even releasing the control to the GPIO controller (selected by the OSSI bit). This feature is enabled even if the MCU oscillator is off.
- Each output channel is driven with the level programmed in the OISx bit in the TIMx_CR2 register as soon as MOE=0. If OSSI=0, the timer releases the output control (taken over by the GPIO controller), otherwise the enable output remains high.
- When complementary outputs are used:
  - The outputs are first put in inactive state (depending on the polarity). This is done asynchronously so that it works even if no clock is provided to the timer.
  - If the timer clock is still present, then the dead-time generator is reactivated in order to drive the outputs with the level programmed in the OISx and OISxN bits after a dead-time. Even in this case, OCx and OCxN cannot be driven to their active level together. Note that because of the resynchronization on MOE, the dead-time duration is slightly longer than usual (around 2 ck_tim clock cycles).
  - If OSSI=0, the timer releases the output control (taken over by the GPIO controller which forces a Hi-Z state), otherwise the enable outputs remain or become high as soon as one of the CCxE or CCxNE bits is high.
- The break status flag (SBIF, BIF and B2IF bits in the TIMx_SR register) is set. An interrupt is generated if the BIE bit in the TIMx_DIER register is set.
- If the AOE bit in the TIMx_BDTR register is set, the MOE bit is automatically set again at the next update event (UEV). As an example, this can be used to perform a regulation. Otherwise, MOE remains low until the application sets it to ‘1’ again. In this case, it can be used for security and the break input can be connected to an alarm from power drivers, thermal sensors or any security components.

Note: The break inputs are active on level. Thus, the MOE cannot be set while the break input is active (neither automatically nor by software). In the meantime, the status flag BIF and B2IF cannot be cleared.

In addition to the break input and the output management, a write protection has been implemented inside the break circuit to safeguard the application. It allows the configuration of several parameters to be freezed (dead-time duration, OCx/OCxN polarities and state when disabled, OCxM configurations, break enable and polarity). The application can choose from 3 levels of protection selected by the LOCK bits in the TIMx_BDTR register. Refer to *Section 30.4.20: TIMx break and dead-time register (TIMx_BDTR)(x = 1, 8)*. The LOCK bits can be written only once after an MCU reset.

Figure 268 shows an example of behavior of the outputs in response to a break.

Figure 268. Various output behavior in response to a break event on BRK (OSSI = 1)

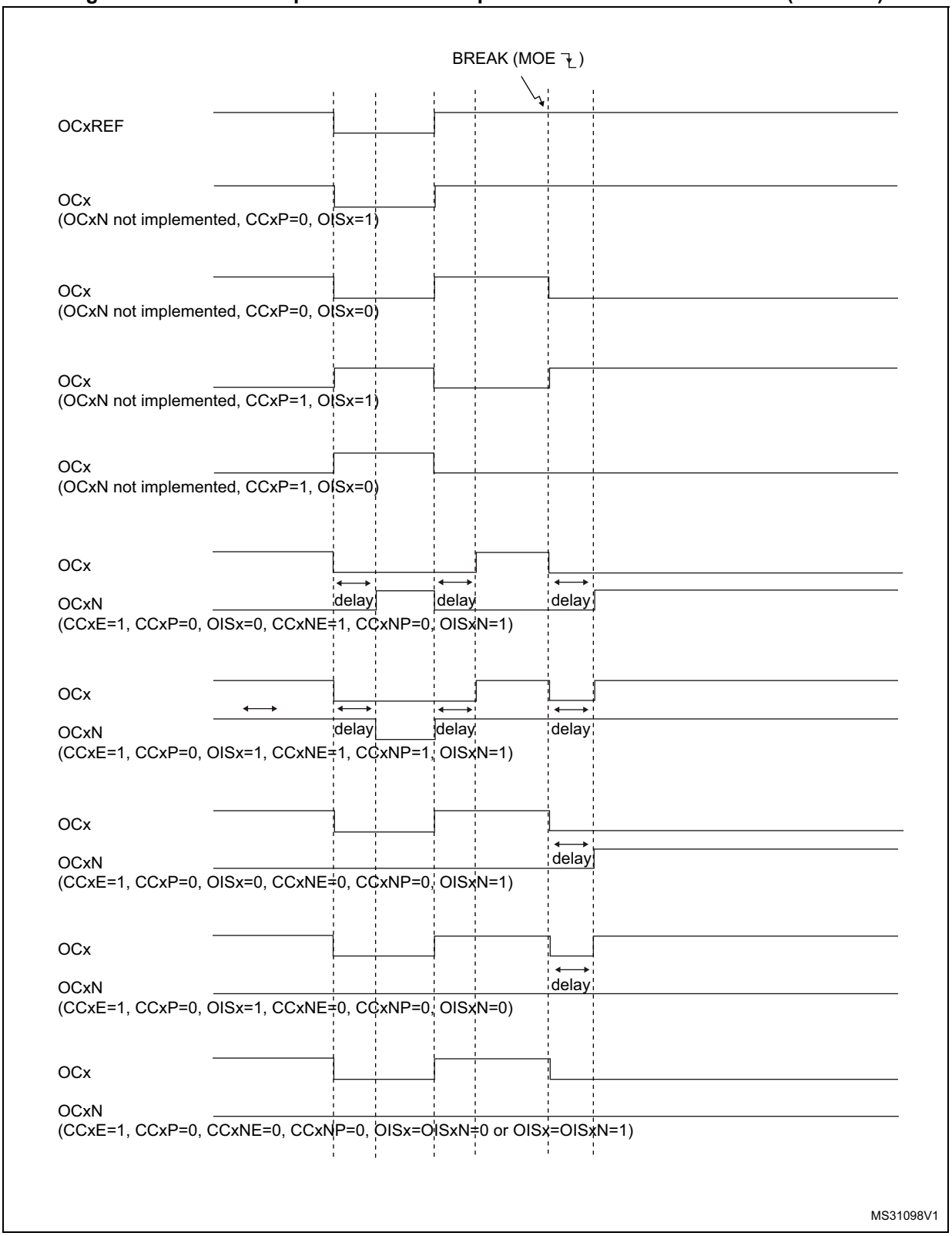

The two break inputs have different behaviors on timer outputs:

- The BRK input can either disable (inactive state) or force the PWM outputs to a predefined safe state.
- BRK2 can only disable (inactive state) the PWM outputs.

The BRK has a higher priority than BRK2 input, as described in *Table 195*.

Note: BRK2 must only be used with OSSR = OSSI = 1.

Table 195. Behavior of timer outputs versus BRK/BRK2 inputs

BRK	BRK2	Timer outputs state	Typical use case	
			OCxN output (low side switches)	OCx output (high side switches)
Active	X	– Inactive then forced output state (after a deadtime) – Outputs disabled if OSSI = 0 (control taken over by GPIO logic)	ON after deadtime insertion	OFF
Inactive	Active	Inactive	OFF	OFF

Figure 269 gives an example of OCx and OCxN output behavior in case of active signals on BRK and BRK2 inputs. In this case, both outputs have active high polarities (CCxP = CCxNP = 0 in TIMx_CCER register).

Figure 269. PWM output state following BRK and BRK2 pins assertion (OSSI=1)

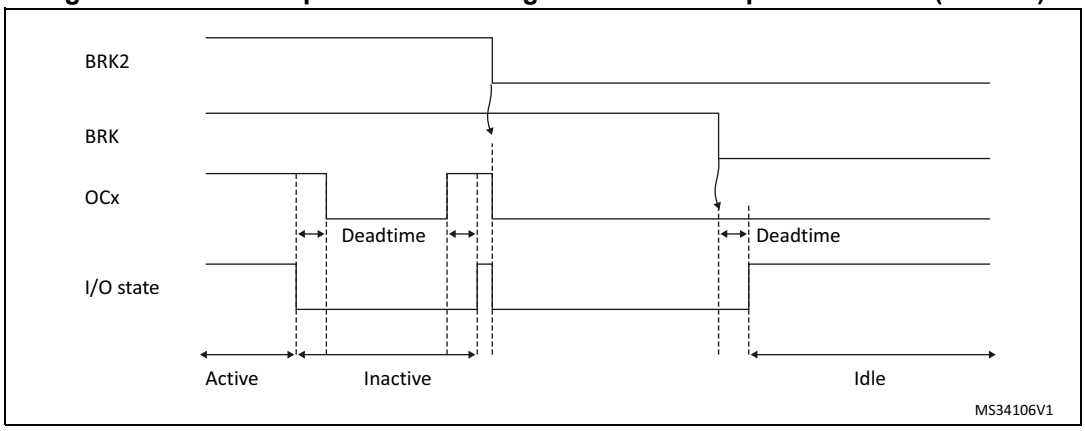

Figure 270. PWM output state following BRK assertion (OSSI=0)

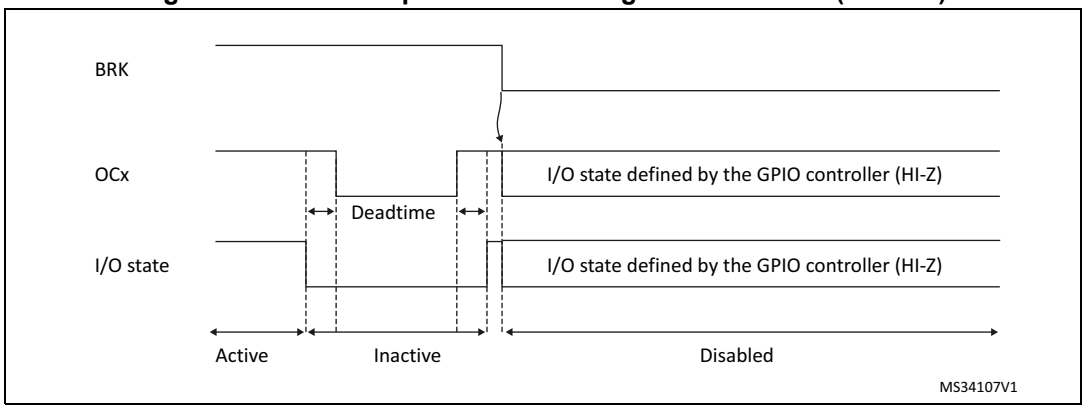

30.3.17 Bidirectional break inputs

Beside regular digital break inputs and internal break events coming from the comparators, the timer 1 and 8 are featuring bidirectional break inputs/outputs combining the two sources, as represented on *Figure 271*.

The TIMx_BKINy_COMPz pins are combining the COMPz output (to be configured in open drain) and the Timerx's TIMx_BKINy input. They allow to have:

- A global break information available for external MCUs or gate drivers shut down inputs, with a single-pin.

- An internal comparator and multiple external open drain comparators outputs ORed together and triggering a break event, when the multiple internal and external break inputs must be merged.

Figure 271. Output redirection

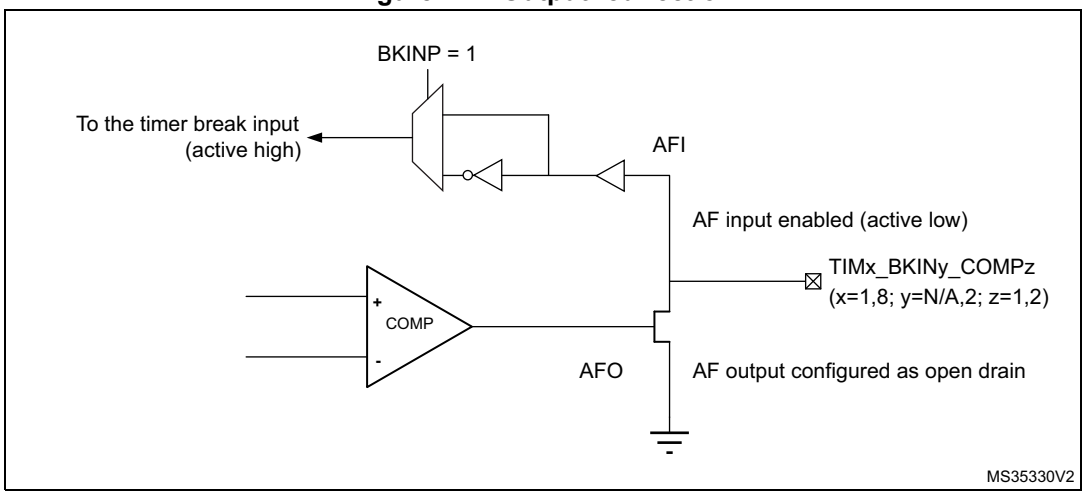

30.3.18 Clearing the OCxREF signal on an external event

The OCxREF signal of a given channel can be cleared when a high level is applied on the ocref_clr_int input (OCxCE enable bit in the corresponding TIMx_CCMRx register set to 1). OCxREF remains low until the next update event (UEV) occurs. This function can only be used in Output compare and PWM modes. It does not work in Forced mode. The OCREF_CLR input is not connected (NC) in this product. The OCCS bit must be set to work in OCxREF clearing mode.

When ETRF is chosen, ETR must be configured as follows:

1. The External Trigger Prescaler should be kept off: bits ETPS[1:0] of the TIMx_SMCR register set to ‘00’.
2. The external clock mode 2 must be disabled: bit ECE of the TIMx_SMCR register set to ‘0’.
3. The External Trigger Polarity (ETP) and the External Trigger Filter (ETF) can be configured according to the user needs.

Figure 272 shows the behavior of the OCxREF signal when the ETRF Input becomes High, for both values of the enable bit OCxCE. In this example, the timer TIMx is programmed in PWM mode.

Figure 272. Clearing TIMx OCxREF

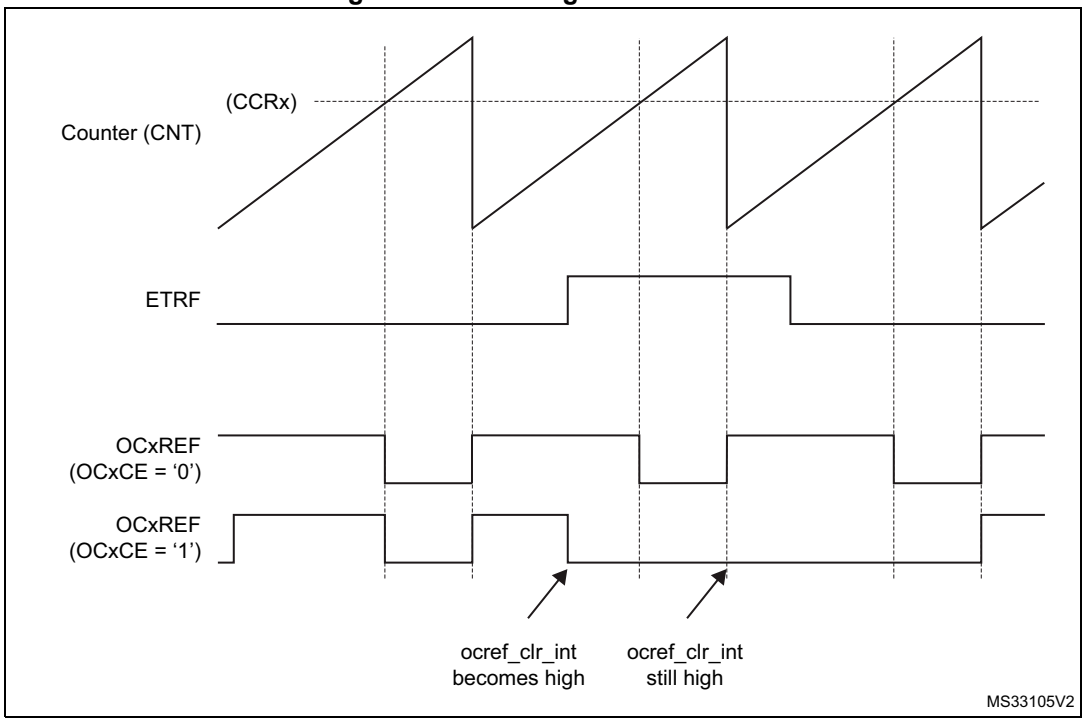

Note: In case of a PWM with a 100% duty cycle (if CCRx>ARR), then OCxREF is enabled again at the next counter overflow.

30.3.19 6-step PWM generation

When complementary outputs are used on a channel, preload bits are available on the OCxM, CCxE and CCxNE bits. The preload bits are transferred to the shadow bits at the COM commutation event. Thus one can program in advance the configuration for the next step and change the configuration of all the channels at the same time. COM can be generated by software by setting the COM bit in the TIMx_EGR register or by hardware (on TRGI rising edge).

A flag is set when the COM event occurs (COMIF bit in the TIMx_SR register), which can generate an interrupt (if the COMIE bit is set in the TIMx_DIER register) or a DMA request (if the COMDE bit is set in the TIMx_DIER register).

The *Figure 273* describes the behavior of the OCx and OCxN outputs when a COM event occurs, in 3 different examples of programmed configurations.

Figure 273. 6-step generation, COM example (OSSR=1)

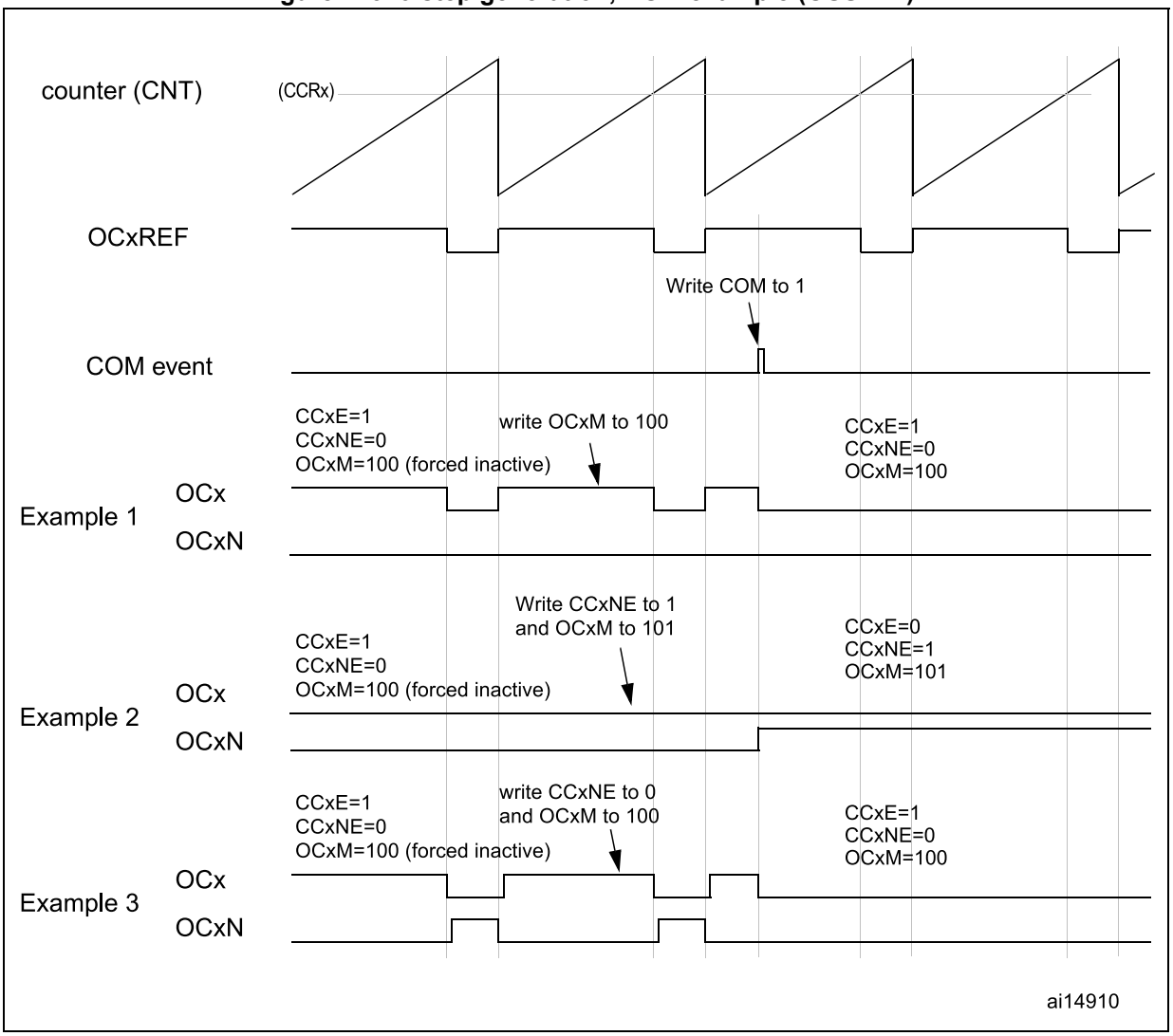

30.3.20 One-pulse mode

One-pulse mode (OPM) is a particular case of the previous modes. It allows the counter to be started in response to a stimulus and to generate a pulse with a programmable length after a programmable delay.

Starting the counter can be controlled through the slave mode controller. Generating the waveform can be done in output compare mode or PWM mode. One-pulse mode is selected by setting the OPM bit in the TIMx_CR1 register. This makes the counter stop automatically at the next update event UEV.

A pulse can be correctly generated only if the compare value is different from the counter initial value. Before starting (when the timer is waiting for the trigger), the configuration must be:

- In upcounting: CNT < CCRx ≤ ARR (in particular, 0 < CCRx)
- In downcounting: CNT > CCRx

Figure 274. Example of one pulse mode.

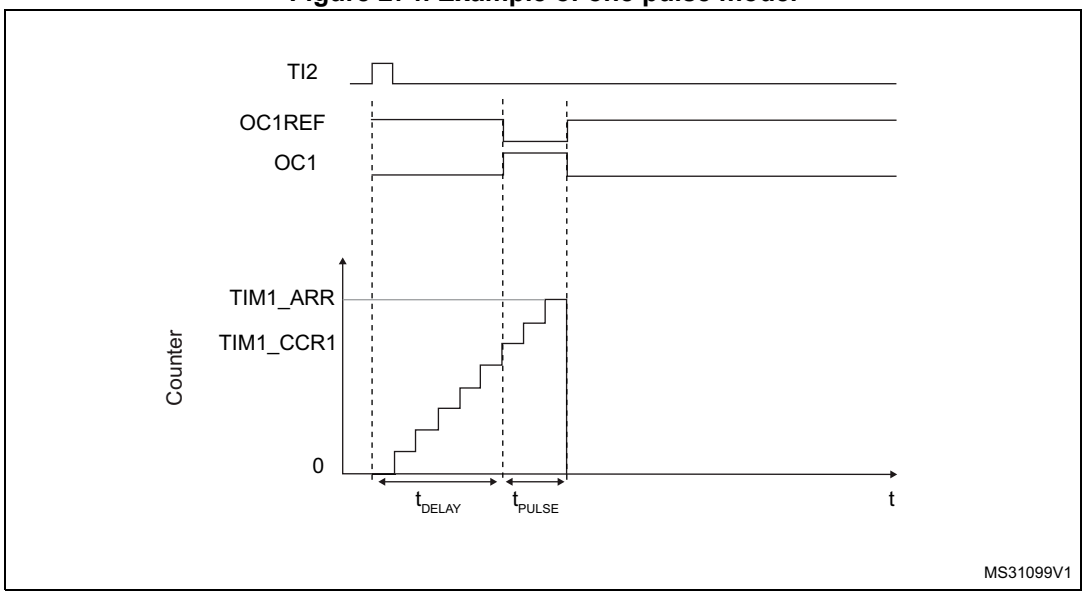

For example one may want to generate a positive pulse on OC1 with a length of t_{PULSE} and after a delay of t_{DELAY} as soon as a positive edge is detected on the TI2 input pin.

Let's use TI2FP2 as trigger 1:

1. Map TI2FP2 to TI2 by writing CC2S='01' in the TIMx_CCMR1 register.
2. TI2FP2 must detect a rising edge, write CC2P='0' and CC2NP='0' in the TIMx_CCER register.
3. Configure TI2FP2 as trigger for the slave mode controller (TRGI) by writing TS=110 in the TIMx_SMCR register.
4. TI2FP2 is used to start the counter by writing SMS to '110' in the TIMx_SMCR register (trigger mode).

The OPM waveform is defined by writing the compare registers (taking into account the clock frequency and the counter prescaler).

- The t_{DELAY} is defined by the value written in the TIMx_CCR1 register.
- The t_{PULSE} is defined by the difference between the auto-reload value and the compare value (TIMx_ARR - TIMx_CCR1).
- Let's say one want to build a waveform with a transition from '0' to '1' when a compare match occurs and a transition from '1' to '0' when the counter reaches the auto-reload value. To do this PWM mode 2 must be enabled by writing OC1M=111 in the TIMx_CCMR1 register. Optionally the preload registers can be enabled by writing OC1PE='1' in the TIMx_CCMR1 register and ARPE in the TIMx_CR1 register. In this case one has to write the compare value in the TIMx_CCR1 register, the auto-reload value in the TIMx_ARR register, generate an update by setting the UG bit and wait for external trigger event on TI2. CC1P is written to '0' in this example.

In our example, the DIR and CMS bits in the TIMx_CR1 register should be low.

Since only 1 pulse (Single mode) is needed, a 1 must be written in the OPM bit in the TIMx_CR1 register to stop the counter at the next update event (when the counter rolls over from the auto-reload value back to 0). When OPM bit in the TIMx_CR1 register is set to '0', so the Repetitive Mode is selected.

Particular case: OCx fast enable:

In One-pulse mode, the edge detection on TIx input set the CEN bit which enables the counter. Then the comparison between the counter and the compare value makes the output toggle. But several clock cycles are needed for these operations and it limits the minimum delay t_{DELAY} min we can get.

If one wants to output a waveform with the minimum delay, the OCxFE bit can be set in the TIMx_CCMRx register. Then OCxRef (and OCx) are forced in response to the stimulus, without taking in account the comparison. Its new level is the same as if a compare match had occurred. OCxFE acts only if the channel is configured in PWM1 or PWM2 mode.

30.3.21 Retriggerable one pulse mode (OPM)

This mode allows the counter to be started in response to a stimulus and to generate a pulse with a programmable length, but with the following differences with Non-retriggerable one pulse mode described in *Section 30.3.20*:

- The pulse starts as soon as the trigger occurs (no programmable delay)
- The pulse is extended if a new trigger occurs before the previous one is completed

The timer must be in Slave mode, with the bits SMS[3:0] = '1000' (Combined Reset + trigger mode) in the TIMx_SMCR register, and the OCxM[3:0] bits set to '1000' or '1001' for Retrigerrable OPM mode 1 or 2.

If the timer is configured in Up-counting mode, the corresponding CCRx must be set to 0 (the ARR register sets the pulse length). If the timer is configured in Down-counting mode, CCRx must be above or equal to ARR.

Note: The OCxM[3:0] and SMS[3:0] bit fields are split into two parts for compatibility reasons, the most significant bit are not contiguous with the 3 least significant ones.

This mode must not be used with center-aligned PWM modes. It is mandatory to have CMS[1:0] = 00 in TIMx_CR1.

Figure 275. Retriggerable one pulse mode

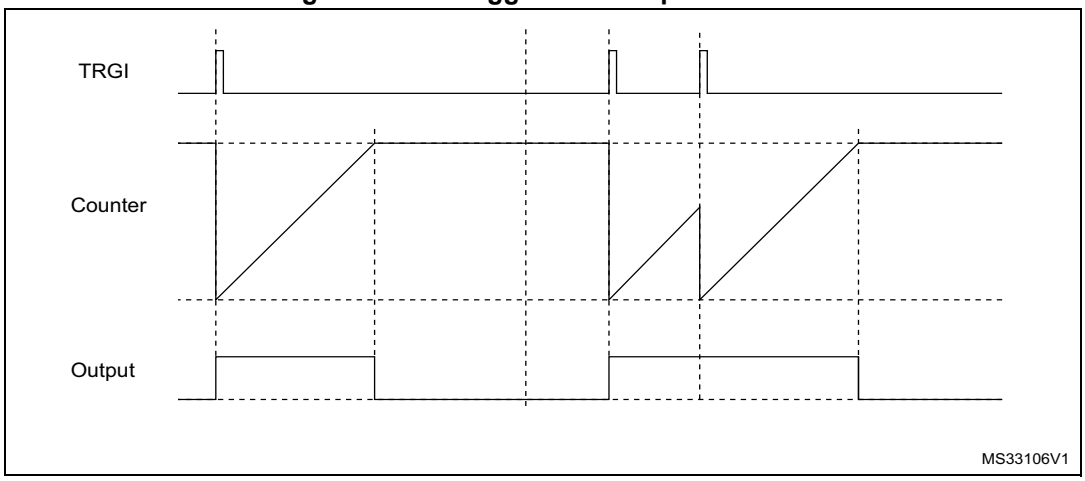

30.3.22 Encoder interface mode

To select Encoder Interface mode write SMS='001' in the TIMx_SMCR register if the counter is counting on TI2 edges only, SMS='010' if it is counting on TI1 edges only and SMS='011' if it is counting on both TI1 and TI2 edges.

Select the TI1 and TI2 polarity by programming the CC1P and CC2P bits in the TIMx_CCER register. When needed, the input filter can be programmed as well. CC1NP and CC2NP must be kept low.

The two inputs TI1 and TI2 are used to interface to a quadrature encoder. Refer to *Table 196*. The counter is clocked by each valid transition on TI1FP1 or TI2FP2 (TI1 and TI2 after input filter and polarity selection, TI1FP1=TI1 if not filtered and not inverted, TI2FP2=TI2 if not filtered and not inverted) assuming that it is enabled (CEN bit in TIMx_CR1 register written to '1'). The sequence of transitions of the two inputs is evaluated and generates count pulses as well as the direction signal. Depending on the sequence the counter counts up or down, the DIR bit in the TIMx_CR1 register is modified by hardware accordingly. The DIR bit is calculated at each transition on any input (TI1 or TI2), whatever the counter is counting on TI1 only, TI2 only or both TI1 and TI2.

Encoder interface mode acts simply as an external clock with direction selection. This means that the counter just counts continuously between 0 and the auto-reload value in the TIMx_ARR register (0 to ARR or ARR down to 0 depending on the direction). So the TIMx_ARR must be configured before starting. In the same way, the capture, compare, repetition counter, trigger output features continue to work as normal. Encoder mode and External clock mode 2 are not compatible and must not be selected together.

Note: The prescaler must be set to zero when encoder mode is enabled

In this mode, the counter is modified automatically following the speed and the direction of the quadrature encoder and its content, therefore, always represents the encoder's position. The count direction correspond to the rotation direction of the connected sensor. The table summarizes the possible combinations, assuming TI1 and TI2 do not switch at the same time.

Table 196. Counting direction versus encoder signals

Active edge	Level on opposite signal (TI1FP1 for TI2, TI2FP2 for TI1)	TI1FP1 signal		TI2FP2 signal	
		Rising	Falling	Rising	Falling
Counting on TI1 only	High	Down	Up	No Count	No Count
	Low	Up	Down	No Count	No Count
Counting on TI2 only	High	No Count	No Count	Up	Down
	Low	No Count	No Count	Down	Up
Counting on TI1 and TI2	High	Down	Up	Up	Down
	Low	Up	Down	Down	Up

A quadrature encoder can be connected directly to the MCU without external interface logic. However, comparators are normally be used to convert the encoder's differential outputs to digital signals. This greatly increases noise immunity. The third encoder output which indicate the mechanical zero position, may be connected to an external interrupt input and trigger a counter reset.

The *Figure 276* gives an example of counter operation, showing count signal generation and direction control. It also shows how input jitter is compensated where both edges are selected. This might occur if the sensor is positioned near to one of the switching points. For this example we assume that the configuration is the following:

- CC1S='01' (TIMx_CCMR1 register, TI1FP1 mapped on TI1).
- CC2S='01' (TIMx_CCMR2 register, TI1FP2 mapped on TI2).
- CC1P='0' and CC1NP='0' (TIMx_CCER register, TI1FP1 non-inverted, TI1FP1=TI1).
- CC2P='0' and CC2NP='0' (TIMx_CCER register, TI1FP2 non-inverted, TI1FP2= TI2).
- SMS='011' (TIMx_SMCR register, both inputs are active on both rising and falling edges).
- CEN='1' (TIMx_CR1 register, Counter enabled).

Figure 276. Example of counter operation in encoder interface mode.

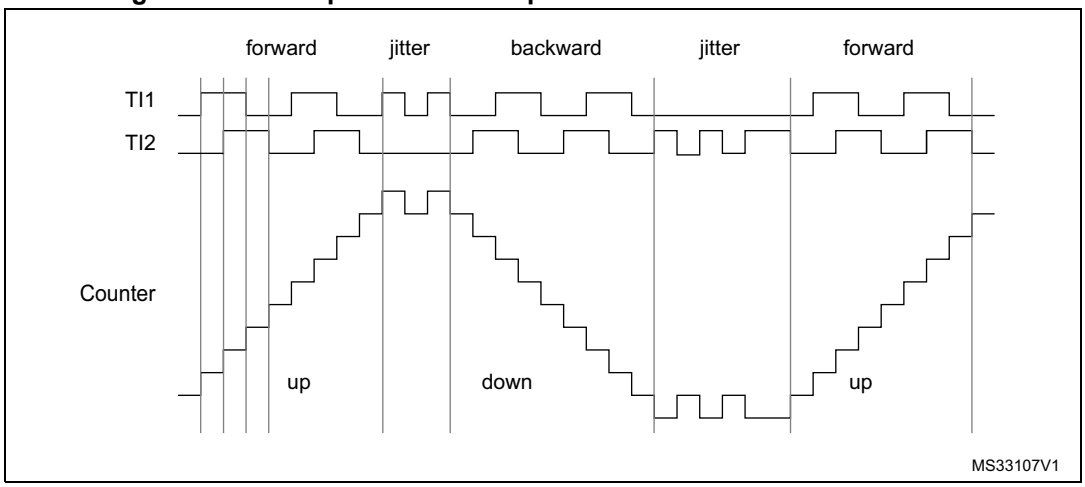

Figure 277 gives an example of counter behavior when TI1FP1 polarity is inverted (same configuration as above except CC1P='1').

Figure 277. Example of encoder interface mode with TI1FP1 polarity inverted.

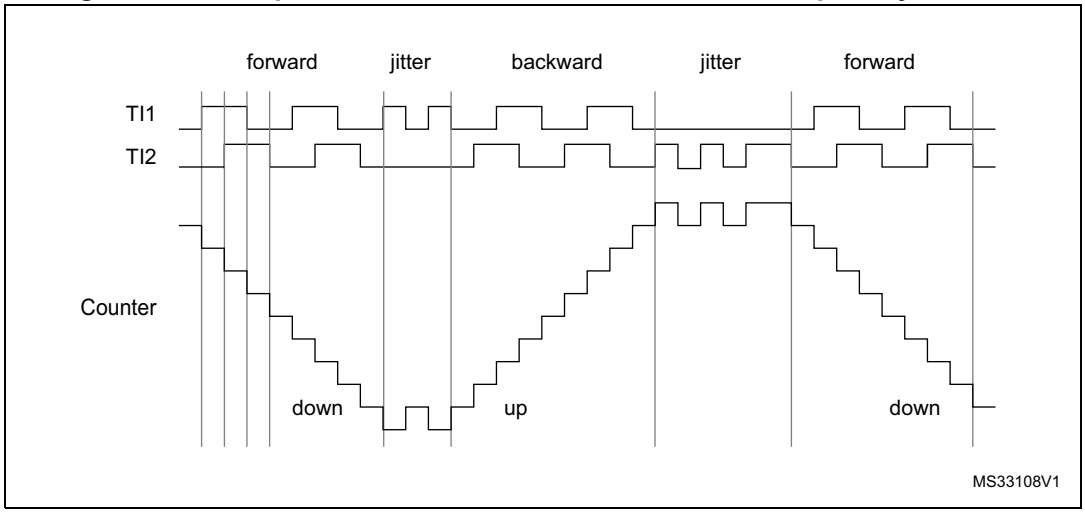

The timer, when configured in Encoder Interface mode provides information on the sensor's current position. Dynamic information can be obtained (speed, acceleration, deceleration) by measuring the period between two encoder events using a second timer configured in capture mode. The output of the encoder which indicates the mechanical zero can be used for this purpose. Depending on the time between two events, the counter can also be read at regular times. This can be done by latching the counter value into a third input capture register if available (then the capture signal must be periodic and can be generated by another timer). when available, it is also possible to read its value through a DMA request.

The IUFREMAP bit in the TIMx_CR1 register forces a continuous copy of the update interrupt flag (UIF) into the timer counter register's bit 31 (TIMxCNT[31]). This allows both the counter value and a potential roll-over condition signaled by the UIFCPY flag to be read in an atomic way. It eases the calculation of angular speed by avoiding race conditions caused, for instance, by a processing shared between a background task (counter reading) and an interrupt (update interrupt).

There is no latency between the UIF and UIFCPY flag assertions.

In 32-bit timer implementations, when the IUFREMAP bit is set, bit 31 of the counter is overwritten by the UIFCPY flag upon read access (the counter's most significant bit is only accessible in write mode).

30.3.23 UIF bit remapping

The IUFREMAP bit in the TIMx_CR1 register forces a continuous copy of the Update Interrupt Flag UIF into the timer counter register's bit 31 (TIMxCNT[31]). This allows both the counter value and a potential roll-over condition signaled by the UIFCPY flag to be read in an atomic way. In particular cases, it can ease the calculations by avoiding race conditions, caused for instance by a processing shared between a background task (counter reading) and an interrupt (Update Interrupt).

There is no latency between the UIF and UIFCPY flags assertion.

30.3.24 Timer input XOR function

The TI1S bit in the TIMx_CR2 register, allows the input filter of channel 1 to be connected to the output of an XOR gate, combining the three input pins TIMx_CH1, TIMx_CH2 and TIMx_CH3.

The XOR output can be used with all the timer input functions such as trigger or input capture. It is convenient to measure the interval between edges on two input signals, as per *Figure 278* below.

Figure 278. Measuring time interval between edges on 3 signals

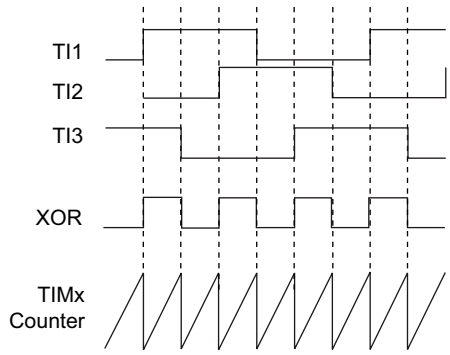

30.3.25 Interfacing with Hall sensors

This is done using the advanced-control timers (TIM1 or TIM8) to generate PWM signals to drive the motor and another timer TIMx (TIM2, TIM3, TIM4) referred to as “interfacing timer” in *Figure 279*. The “interfacing timer” captures the 3 timer input pins (CC1, CC2, CC3) connected through a XOR to the TI1 input channel (selected by setting the TI1S bit in the TIMx_CR2 register).

The slave mode controller is configured in reset mode; the slave input is TI1F_ED. Thus, each time one of the 3 inputs toggles, the counter restarts counting from 0. This creates a time base triggered by any change on the Hall inputs.

On the “interfacing timer”, capture/compare channel 1 is configured in capture mode, capture signal is TRC (See *Figure 252: Capture/compare channel (example: channel 1 input stage) on page 932*). The captured value, which corresponds to the time elapsed between 2 changes on the inputs, gives information about motor speed.

The “interfacing timer” can be used in output mode to generate a pulse which changes the configuration of the channels of the advanced-control timer (TIM1 or TIM8) (by triggering a COM event). The TIM1 timer is used to generate PWM signals to drive the motor. To do this, the interfacing timer channel must be programmed so that a positive pulse is generated after a programmed delay (in output compare or PWM mode). This pulse is sent to the advanced-control timer (TIM1 or TIM8) through the TRGO output.

Example: one wants to change the PWM configuration of the advanced-control timer TIM1 after a programmed delay each time a change occurs on the Hall inputs connected to one of the TIMx timers.

- Configure 3 timer inputs ORed to the TI1 input channel by writing the TI1S bit in the TIMx_CR2 register to ‘1’,
- Program the time base: write the TIMx_ARR to the max value (the counter must be cleared by the TI1 change. Set the prescaler to get a maximum counter period longer than the time between 2 changes on the sensors,
- Program the channel 1 in capture mode (TRC selected): write the CC1S bits in the TIMx_CCMR1 register to ‘01’. The digital filter can also be programmed if needed,
- Program the channel 2 in PWM 2 mode with the desired delay: write the OC2M bits to ‘111’ and the CC2S bits to ‘00’ in the TIMx_CCMR1 register,
- Select OC2REF as trigger output on TRGO: write the MMS bits in the TIMx_CR2 register to ‘101’,

In the advanced-control timer TIM1, the right ITR input must be selected as trigger input, the timer is programmed to generate PWM signals, the capture/compare control signals are preloaded (CCPC=1 in the TIMx_CR2 register) and the COM event is controlled by the trigger input (CCUS=1 in the TIMx_CR2 register). The PWM control bits (CCxE, OCxM) are written after a COM event for the next step (this can be done in an interrupt subroutine generated by the rising edge of OC2REF).

The *Figure 279* describes this example.

Figure 279. Example of Hall sensor interface

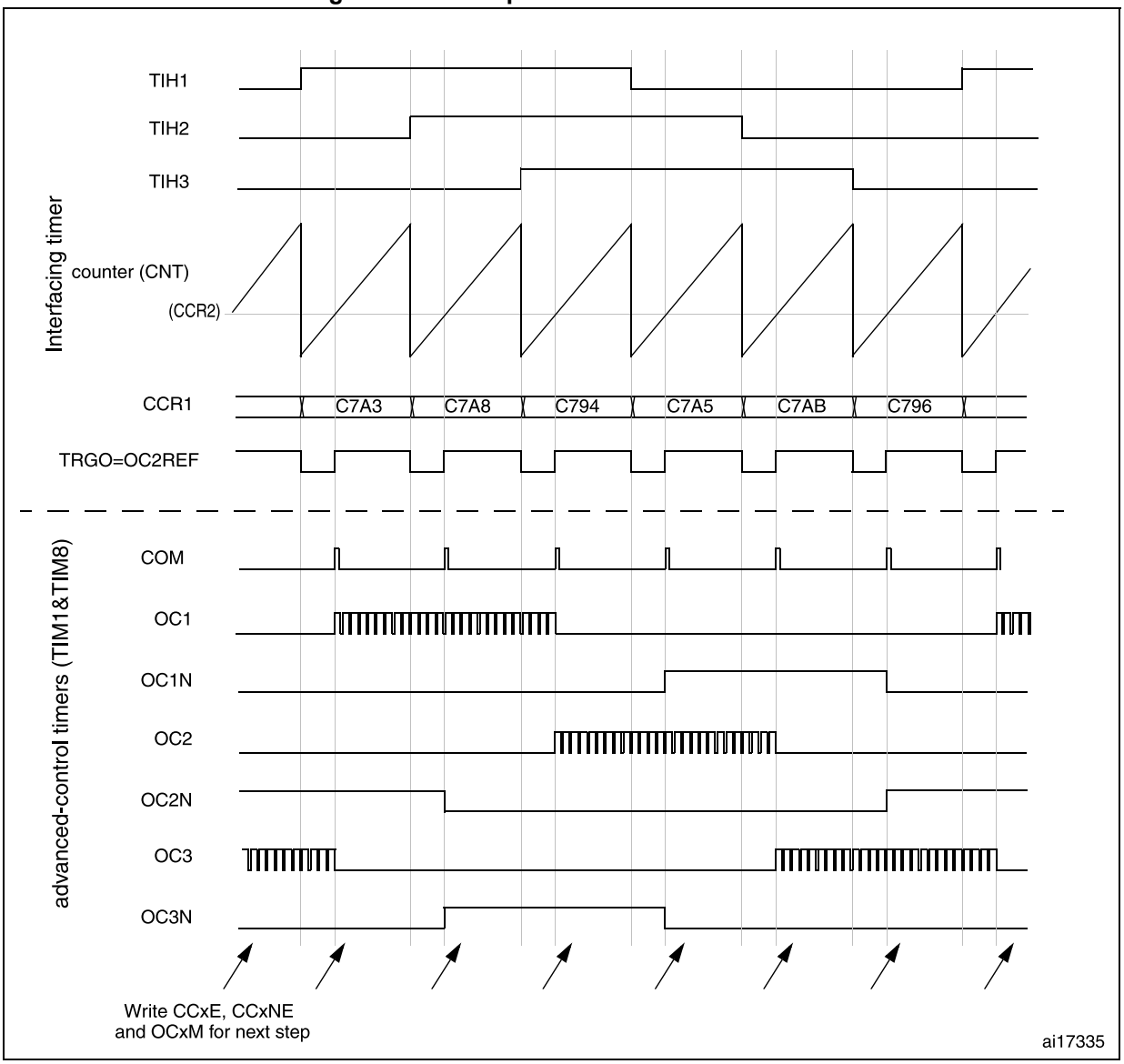

30.3.26 Timer synchronization

The TIMx timers are linked together internally for timer synchronization or chaining. They can be synchronized in several modes: Reset mode, Gated mode, and Trigger mode.

Slave mode: Reset mode

The counter and its prescaler can be reinitialized in response to an event on a trigger input. Moreover, if the URS bit from the TIMx_CR1 register is low, an update event UEV is generated. Then all the preloaded registers (TIMx_ARR, TIMx_CCRx) are updated.

In the following example, the upcounter is cleared in response to a rising edge on TI1 input:

- Configure the channel 1 to detect rising edges on TI1. Configure the input filter duration (in this example, we do not need any filter, so we keep IC1F=0000). The capture prescaler is not used for triggering, so it does not need to be configured. The CC1S bits select the input capture source only, CC1S = 01 in the TIMx_CCMR1 register. Write CC1P=0 and CC1NP=’0’ in TIMx_CCER register to validate the polarity (and detect rising edges only).
- Configure the timer in reset mode by writing SMS=100 in TIMx_SMCR register. Select TI1 as the input source by writing TS=101 in TIMx_SMCR register.
- Start the counter by writing CEN=1 in the TIMx_CR1 register.

The counter starts counting on the internal clock, then behaves normally until TI1 rising edge. When TI1 rises, the counter is cleared and restarts from 0. In the meantime, the trigger flag is set (TIF bit in the TIMx_SR register) and an interrupt request, or a DMA request can be sent if enabled (depending on the TIE and TDE bits in TIMx_DIER register).

The following figure shows this behavior when the auto-reload register TIMx_ARR=0x36. The delay between the rising edge on TI1 and the actual reset of the counter is due to the resynchronization circuit on TI1 input.

Figure 280. Control circuit in reset mode

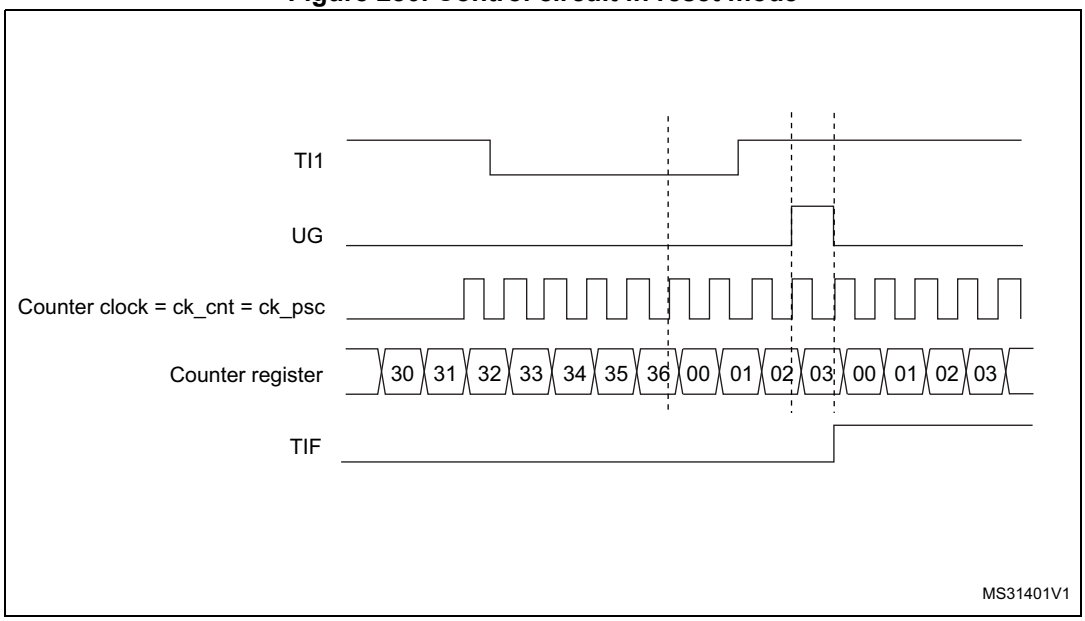

Slave mode: Gated mode

The counter can be enabled depending on the level of a selected input.

In the following example, the upcounter counts only when TI1 input is low:

- Configure the channel 1 to detect low levels on TI1. Configure the input filter duration (in this example, we do not need any filter, so we keep IC1F=0000). The capture prescaler is not used for triggering, so it does not need to be configured. The CC1S bits select the input capture source only, CC1S=01 in TIMx_CCMR1 register. Write CC1P=1 and CC1NP='0' in TIMx_CCER register to validate the polarity (and detect low level only).
- Configure the timer in gated mode by writing SMS=101 in TIMx_SMCR register. Select TI1 as the input source by writing TS=101 in TIMx_SMCR register.
- Enable the counter by writing CEN=1 in the TIMx_CR1 register (in gated mode, the counter doesn't start if CEN=0, whatever is the trigger input level).

The counter starts counting on the internal clock as long as TI1 is low and stops as soon as TI1 becomes high. The TIF flag in the TIMx_SR register is set both when the counter starts or stops.

The delay between the rising edge on TI1 and the actual stop of the counter is due to the resynchronization circuit on TI1 input.

Figure 281. Control circuit in Gated mode

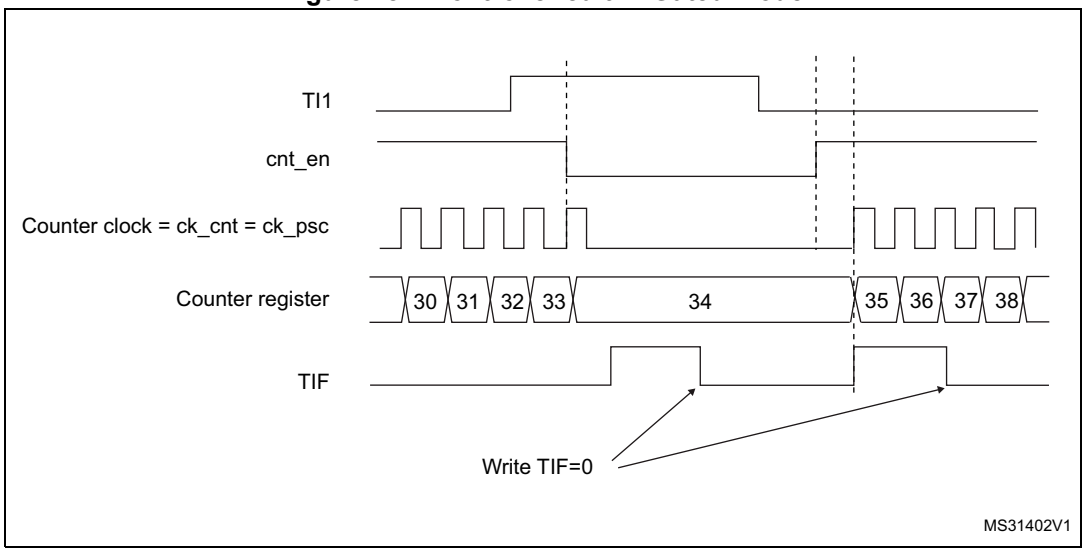

Slave mode: Trigger mode

The counter can start in response to an event on a selected input.

In the following example, the upcounter starts in response to a rising edge on TI2 input:

- Configure the channel 2 to detect rising edges on TI2. Configure the input filter duration (in this example, we do not need any filter, so we keep IC2F=0000). The capture prescaler is not used for triggering, so it does not need to be configured. The CC2S bits are configured to select the input capture source only, CC2S=01 in TIMx_CCMR1

register. Write CC2P=1 and CC2NP=0 in TIMx_CCER register to validate the polarity (and detect low level only).

- Configure the timer in trigger mode by writing SMS=110 in TIMx_SMCR register. Select TI2 as the input source by writing TS=110 in TIMx_SMCR register.

When a rising edge occurs on TI2, the counter starts counting on the internal clock and the TIF flag is set.

The delay between the rising edge on TI2 and the actual start of the counter is due to the resynchronization circuit on TI2 input.

Figure 282. Control circuit in trigger mode

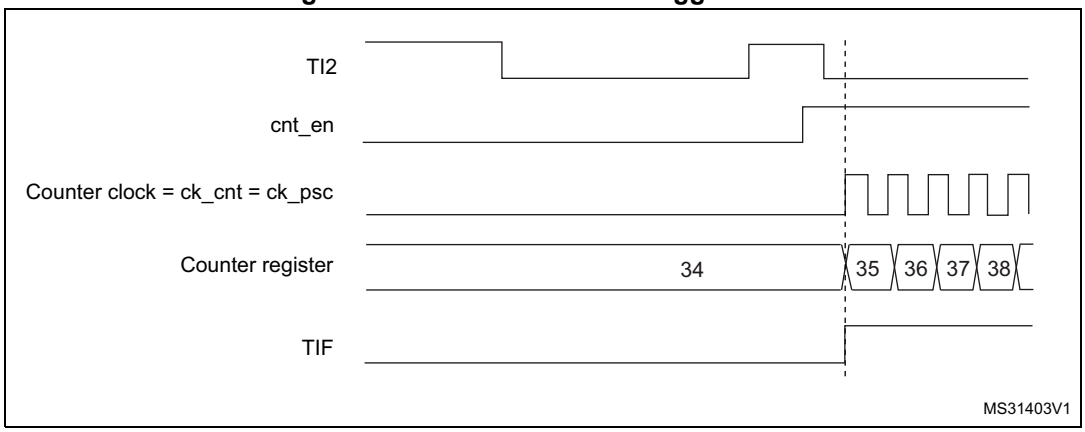

Slave mode: Combined reset + trigger mode

In this case, a rising edge of the selected trigger input (TRGI) reinitializes the counter, generates an update of the registers, and starts the counter.

This mode is used for one-pulse mode.

Slave mode: external clock mode 2 + trigger mode

The external clock mode 2 can be used in addition to another slave mode (except external clock mode 1 and encoder mode). In this case, the ETR signal is used as external clock input, and another input can be selected as trigger input (in reset mode, gated mode or trigger mode). It is recommended not to select ETR as TRGI through the TS bits of TIMx_SMCR register.

In the following example, the upcounter is incremented at each rising edge of the ETR signal as soon as a rising edge of TI1 occurs:

1. Configure the external trigger input circuit by programming the TIMx_SMCR register as follows:
   - ETF = 0000: no filter
   - ETPS=00: prescaler disabled
   - ETP=0: detection of rising edges on ETR and ECE=1 to enable the external clock mode 2.
2. Configure the channel 1 as follows, to detect rising edges on TI:
   - IC1F=0000: no filter.
   - The capture prescaler is not used for triggering and does not need to be configured.
   - CC1S=01in TIMx_CCMR1 register to select only the input capture source
   - CC1P=0 and CC1NP='0' in TIMx_CCER register to validate the polarity (and detect rising edge only).
3. Configure the timer in trigger mode by writing SMS=110 in TIMx_SMCR register. Select TI1 as the input source by writing TS=101 in TIMx_SMCR register.

A rising edge on TI1 enables the counter and sets the TIF flag. The counter then counts on ETR rising edges.

The delay between the rising edge of the ETR signal and the actual reset of the counter is due to the resynchronization circuit on ETRP input.

Figure 283. Control circuit in external clock mode 2 + trigger mode

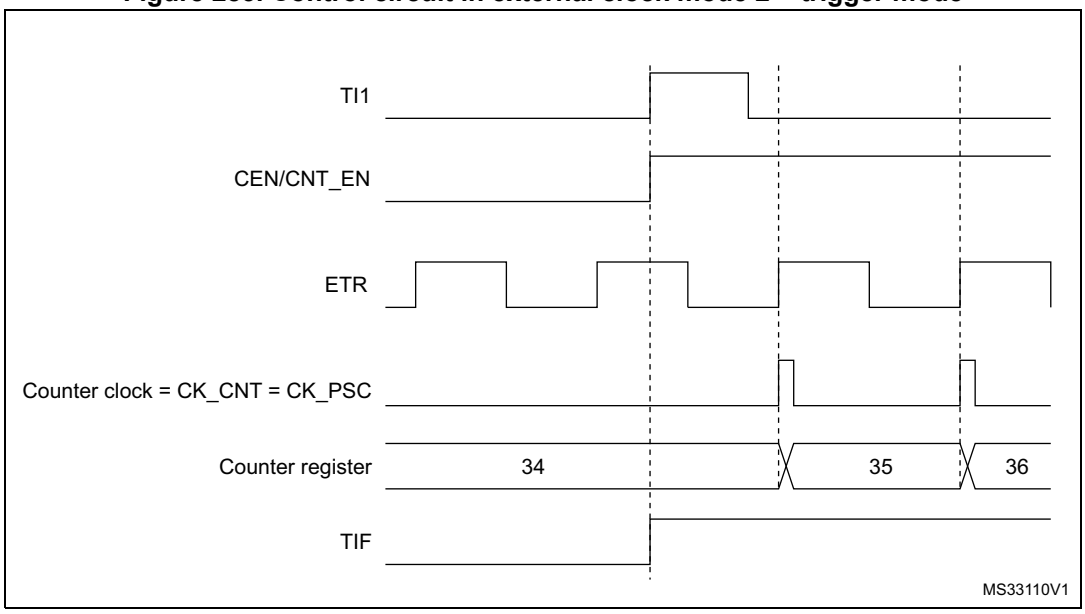

Note: The clock of the slave peripherals (timer, ADC, ...) receiving the TRGO or the TRGO2 signals must be enabled prior to receive events from the master timer, and the clock frequency (prescaler) must not be changed on-the-fly while triggers are received from the master timer.

30.3.27 ADC synchronization

The timer can generate an ADC triggering event with various internal signals, such as reset, enable or compare events. It is also possible to generate a pulse issued by internal edge detectors, such as:

- Rising and falling edges of OC4ref
- Rising edge on OC5ref or falling edge on OC6ref

The triggers are issued on the TRGO2 internal line which is redirected to the ADC. There is a total of 16 possible events, which can be selected using the MMS2[3:0] bits in the TIMx_CR2 register.

An example of an application for 3-phase motor drives is given in *Figure 263 on page 944*.

Note: The clock of the slave peripherals (timer, ADC, ...) receiving the TRGO or the TRGO2 signals must be enabled prior to receive events from the master timer, and the clock frequency (prescaler) must not be changed on-the-fly while triggers are received from the master timer.

Note: The clock of the ADC must be enabled prior to receive events from the master timer, and must not be changed on-the-fly while triggers are received from the timer.

30.3.28 DMA burst mode

The TIMx timers have the capability to generate multiple DMA requests upon a single event. The main purpose is to be able to re-program part of the timer multiple times without software overhead, but it can also be used to read several registers in a row, at regular intervals.

The DMA controller destination is unique and must point to the virtual register TIMx_DMAR. On a given timer event, the timer launches a sequence of DMA requests (burst). Each write into the TIMx_DMAR register is actually redirected to one of the timer registers.

The DBL[4:0] bits in the TIMx_DCR register set the DMA burst length. The timer recognizes a burst transfer when a read or a write access is done to the TIMx_DMAR address), i.e. the number of transfers (either in half-words or in bytes).

The DBA[4:0] bits in the TIMx_DCR registers define the DMA base address for DMA transfers (when read/write access are done through the TIMx_DMAR address). DBA is defined as an offset starting from the address of the TIMx_CR1 register:

Example:

00000: TIMx_CR1

00001: TIMx_CR2

00010: TIMx_SMCR

As an example, the timer DMA burst feature is used to update the contents of the CCRx registers (x = 2, 3, 4) upon an update event, with the DMA transferring half words into the CCRx registers.

This is done in the following steps:

1. Configure the corresponding DMA channel as follows:
   - DMA channel peripheral address is the DMAR register address
   - DMA channel memory address is the address of the buffer in the RAM containing the data to be transferred by DMA into CCRx registers.
   - Number of data to transfer = 3 (See note below).
   - Circular mode disabled.
2. Configure the DCR register by configuring the DBA and DBL bit fields as follows: DBL = 3 transfers, DBA = 0xE.
3. Enable the TIMx update DMA request (set the UDE bit in the DIER register).
4. Enable TIMx
5. Enable the DMA channel

This example is for the case where every CCRx register to be updated once. If every CCRx register is to be updated twice for example, the number of data to transfer should be 6. Let's take the example of a buffer in the RAM containing data1, data2, data3, data4, data5 and data6. The data is transferred to the CCRx registers as follows: on the first update DMA request, data1 is transferred to CCR2, data2 is transferred to CCR3, data3 is transferred to CCR4 and on the second update DMA request, data4 is transferred to CCR2, data5 is transferred to CCR3 and data6 is transferred to CCR4.

Note: A null value can be written to the reserved registers.

30.3.29 Debug mode

When the microcontroller enters debug mode (Cortex®-M4 core halted), the TIMx counter either continues to work normally or stops, depending on DBG_TIMx_STOP configuration bit in DBG module.

For safety purposes, when the counter is stopped, the outputs are disabled (as if the MOE bit was reset). The outputs can either be forced to an inactive state (OSSI bit = 1), or have their control taken over by the GPIO controller (OSSI bit = 0), typically to force a Hi-Z.

For more details, refer to section Debug support (DBG).

30.4 TIM1/TIM8 registers

Refer to for a list of abbreviations used in register descriptions.

The peripheral registers can be accessed by half-words (16-bit) or words (32-bit).

30.4.1 TIMx control register 1 (TIMx_CR1)(x = 1, 8)

Address offset: 0x00

Reset value: 0x0000

15	14	13	12	11	10	9	8	7	6	5	4	3	2	1	0
Res.	Res.	Res.	Res.	UIFREMAP	Res.	CKD[1:0]		ARPE	CMS[1:0]		DIR	OPM	URS	UDIS	CEN
				rw		rw	rw	rw	rw	rw	rw	rw	rw	rw	rw

Bits 15:12 Reserved, must be kept at reset value.

Bit 11 **UIFREMAP**: UIF status bit remapping

0: No remapping. UIF status bit is not copied to TIMx_CNT register bit 31.
1: Remapping enabled. UIF status bit is copied to TIMx_CNT register bit 31.

Bit 10 Reserved, must be kept at reset value.

Bits 9:8 **CKD[1:0]**: Clock division

This bit-field indicates the division ratio between the timer clock (CK_INT) frequency and the dead-time and sampling clock (t_{DTS})used by the dead-time generators and the digital filters (ETR, TIx),

00: $t_{DTS}=t_{CK_INT}$
01: $t_{DTS}=2*t_{CK_INT}$
10: $t_{DTS}=4*t_{CK_INT}$
11: Reserved, do not program this value

Bit 7 **ARPE**: Auto-reload preload enable

0: TIMx_ARR register is not buffered
1: TIMx_ARR register is buffered

Bits 6:5 **CMS[1:0]**: Center-aligned mode selection

00: Edge-aligned mode. The counter counts up or down depending on the direction bit (DIR).
01: Center-aligned mode 1. The counter counts up and down alternatively. Output compare interrupt flags of channels configured in output (CCxS=00 in TIMx_CCMRx register) are set only when the counter is counting down.
10: Center-aligned mode 2. The counter counts up and down alternatively. Output compare interrupt flags of channels configured in output (CCxS=00 in TIMx_CCMRx register) are set only when the counter is counting up.
11: Center-aligned mode 3. The counter counts up and down alternatively. Output compare interrupt flags of channels configured in output (CCxS=00 in TIMx_CCMRx register) are set both when the counter is counting up or down.

Note: Switch from edge-aligned mode to center-aligned mode as long as the counter is enabled (CEN=1) is not allowed

Bit 4 **DIR**: Direction

0: Counter used as upcounter
1: Counter used as downcounter

Note: This bit is read only when the timer is configured in Center-aligned mode or Encoder mode.

Bit 3 **OPM**: One pulse mode

0: Counter is not stopped at update event
1: Counter stops counting at the next update event (clearing the bit CEN)

Bit 2 **URS**: Update request source

This bit is set and cleared by software to select the UEV event sources.

0: Any of the following events generate an update interrupt or DMA request if enabled. These events can be:

- Counter overflow/underflow
- Setting the UG bit
- Update generation through the slave mode controller

1: Only counter overflow/underflow generates an update interrupt or DMA request if enabled.

Bit 1 **UDIS**: Update disable

This bit is set and cleared by software to enable/disable UEV event generation.

0: UEV enabled. The Update (UEV) event is generated by one of the following events:

- Counter overflow/underflow
- Setting the UG bit
- Update generation through the slave mode controller

Buffered registers are then loaded with their preload values.

1: UEV disabled. The Update event is not generated, shadow registers keep their value (ARR, PSC, CCRx). However the counter and the prescaler are reinitialized if the UG bit is set or if a hardware reset is received from the slave mode controller.

Bit 0 **CEN**: Counter enable

0: Counter disabled
1: Counter enabled

Note: External clock, gated mode and encoder mode can work only if the CEN bit has been previously set by software. However trigger mode can set the CEN bit automatically by hardware.

30.4.2 TIMx control register 2 (TIMx_CR2)(x = 1, 8)

Address offset: 0x04

Reset value: 0x0000 0000

31	30	29	28	27	26	25	24	23	22	21	20	19	18	17	16
Res.	Res.	Res.	Res.	Res.	Res.	Res.	Res.	MMS2[3:0]				Res.	OIS6	Res.	OIS5
								rw	rw	rw	rw		rw		rw

15	14	13	12	11	10	9	8	7	6	5	4	3	2	1	0
Res.	OIS4	OIS3N	OIS3	OIS2N	OIS2	OIS1N	OIS1	TI1S	MMS[2:0]			CCDS	CCUS	Res.	CCPC
	rw	rw	rw	rw	rw	rw	rw	rw	rw	rw	rw	rw	rw		rw

Bits 31:24 Reserved, must be kept at reset value.

Bits 23:20 **MMS2[3:0]**: Master mode selection 2

These bits allow the information to be sent to ADC for synchronization (TRGO2) to be selected. The combination is as follows:

0000: **Reset** - the UG bit from the TIMx_EGR register is used as trigger output (TRGO2). If the reset is generated by the trigger input (slave mode controller configured in reset mode), the signal on TRGO2 is delayed compared to the actual reset.

0001: **Enable** - the Counter Enable signal CNT_EN is used as trigger output (TRGO2). It is useful to start several timers at the same time or to control a window in which a slave timer is enabled. The Counter Enable signal is generated by a logic AND between the CEN control bit and the trigger input when configured in Gated mode. When the Counter Enable signal is controlled by the trigger input, there is a delay on TRGO2, except if the Master/Slave mode is selected (see the MSM bit description in TIMx_SMCR register).

0010: **Update** - the update event is selected as trigger output (TRGO2). For instance, a master timer can then be used as a prescaler for a slave timer.

0011: **Compare pulse** - the trigger output sends a positive pulse when the CC1IF flag is to be set (even if it was already high), as soon as a capture or compare match occurs (TRGO2).

0100: **Compare** - OC1REF signal is used as trigger output (TRGO2)

0101: **Compare** - OC2REF signal is used as trigger output (TRGO2)

0110: **Compare** - OC3REF signal is used as trigger output (TRGO2)

0111: **Compare** - OC4REF signal is used as trigger output (TRGO2)

1000: **Compare** - OC5REF signal is used as trigger output (TRGO2)

1001: **Compare** - OC6REF signal is used as trigger output (TRGO2)

1010: **Compare Pulse** - OC4REF rising or falling edges generate pulses on TRGO2

1011: **Compare Pulse** - OC6REF rising or falling edges generate pulses on TRGO2

1100: **Compare Pulse** - OC4REF or OC6REF rising edges generate pulses on TRGO2

1101: **Compare Pulse** - OC4REF rising or OC6REF falling edges generate pulses on TRGO2

1110: **Compare Pulse** - OC5REF or OC6REF rising edges generate pulses on TRGO2

1111: **Compare Pulse** - OC5REF rising or OC6REF falling edges generate pulses on TRGO2

Note: The clock of the slave timer or ADC must be enabled prior to receive events from the master timer, and must not be changed on-the-fly while triggers are received from the master timer.

Bit 19 Reserved, must be kept at reset value.

Bit 18 **OIS6**: Output Idle state 6 (OC6 output)

Refer to OIS1 bit

Bit 17 Reserved, must be kept at reset value.

Bit 16 **OIS5**: Output Idle state 5 (OC5 output)

Refer to OIS1 bit

Bit 15 Reserved, must be kept at reset value.

Bit 14 **OIS4**: Output Idle state 4 (OC4 output)

Refer to OIS1 bit

Bit 13 **OIS3N**: Output Idle state 3 (OC3N output)

Refer to OIS1N bit

Bit 12 **OIS3**: Output Idle state 3 (OC3 output)

Refer to OIS1 bit

Bit 11 **OIS2N**: Output Idle state 2 (OC2N output)
Refer to OIS1N bit

Bit 10 **OIS2**: Output Idle state 2 (OC2 output)
Refer to OIS1 bit

Bit 9 **OIS1N**: Output Idle state 1 (OC1N output)
0: OC1N=0 after a dead-time when MOE=0
1: OC1N=1 after a dead-time when MOE=0

Note: This bit can not be modified as long as LOCK level 1, 2 or 3 has been programmed (LOCK bits in TIMx_BDTR register).

Bit 8 **OIS1**: Output Idle state 1 (OC1 output)
0: OC1=0 (after a dead-time if OC1N is implemented) when MOE=0
1: OC1=1 (after a dead-time if OC1N is implemented) when MOE=0

Note: This bit can not be modified as long as LOCK level 1, 2 or 3 has been programmed (LOCK bits in TIMx_BDTR register).

Bit 7 **TI1S**: TI1 selection
0: The TIMx_CH1 pin is connected to TI1 input
1: The TIMx_CH1, CH2 and CH3 pins are connected to the TI1 input (XOR combination)

Bits 6:4 **MMS[2:0]**: Master mode selection
These bits allow selected information to be sent in master mode to slave timers for synchronization (TRGO). The combination is as follows:
000: **Reset** - the UG bit from the TIMx_EGR register is used as trigger output (TRGO). If the reset is generated by the trigger input (slave mode controller configured in reset mode) then the signal on TRGO is delayed compared to the actual reset.
001: **Enable** - the Counter Enable signal CNT_EN is used as trigger output (TRGO). It is useful to start several timers at the same time or to control a window in which a slave timer is enable. The Counter Enable signal is generated by a logic AND between CEN control bit and the trigger input when configured in gated mode. When the Counter Enable signal is controlled by the trigger input, there is a delay on TRGO, except if the master/slave mode is selected (see the MSM bit description in TIMx_SMCR register).
010: **Update** - The update event is selected as trigger output (TRGO). For instance a master timer can then be used as a prescaler for a slave timer.
011: **Compare Pulse** - The trigger output send a positive pulse when the CC1IF flag is to be set (even if it was already high), as soon as a capture or a compare match occurred. (TRGO).
100: **Compare** - OC1REF signal is used as trigger output (TRGO)
101: **Compare** - OC2REF signal is used as trigger output (TRGO)
110: **Compare** - OC3REF signal is used as trigger output (TRGO)
111: **Compare** - OC4REF signal is used as trigger output (TRGO)

Note: The clock of the slave timer or ADC must be enabled prior to receive events from the master timer, and must not be changed on-the-fly while triggers are received from the master timer.

Bit 3 **CCDS**: Capture/compare DMA selection
0: CCx DMA request sent when CCx event occurs
1: CCx DMA requests sent when update event occurs

Bit 2 **CCUS**: Capture/compare control update selection

0: When capture/compare control bits are preloaded (CCPC=1), they are updated by setting the COMG bit only

1: When capture/compare control bits are preloaded (CCPC=1), they are updated by setting the COMG bit or when an rising edge occurs on TRGI

Note: This bit acts only on channels that have a complementary output.

Bit 1 Reserved, must be kept at reset value.

Bit 0 **CCPC**: Capture/compare preloaded control

0: CCxE, CCxNE and OCxM bits are not preloaded

1: CCxE, CCxNE and OCxM bits are preloaded, after having been written, they are updated only when a commutation event (COM) occurs (COMG bit set or rising edge detected on TRGI, depending on the CCUS bit).

Note: This bit acts only on channels that have a complementary output.

30.4.3 TIMx slave mode control register (TIMx_SMCR)(x = 1, 8)

Address offset: 0x08

Reset value: 0x0000 0000

31	30	29	28	27	26	25	24	23	22	21	20	19	18	17	16
Res.	Res.	Res.	Res.	Res.	Res.	Res.	Res.	Res.	Res.	Res.	Res.	Res.	Res.	Res.	SMS[3]
															rw
15	14	13	12	11	10	9	8	7	6	5	4	3	2	1	0
ETP	ECE	ETPS[1:0]		ETF[3:0]				MSM	TS[2:0]			OCCS	SMS[2:0]		
rw	rw	rw	rw	rw	rw	rw	rw	rw	rw	rw	rw	rw	rw	rw	rw

Bits 31:17 Reserved, must be kept at reset value.

Bit 15 **ETP**: External trigger polarity

This bit selects whether ETR or $\overline{ETR}$ is used for trigger operations

0: ETR is non-inverted, active at high level or rising edge.

1: ETR is inverted, active at low level or falling edge.

Bit 14 **ECE**: External clock enable

This bit enables External clock mode 2.

0: External clock mode 2 disabled

1: External clock mode 2 enabled. The counter is clocked by any active edge on the ETRF signal.

Note: Setting the ECE bit has the same effect as selecting external clock mode 1 with TRGI connected to ETRF (SMS=111 and TS=111).

It is possible to simultaneously use external clock mode 2 with the following slave modes: reset mode, gated mode and trigger mode. Nevertheless, TRGI must not be connected to ETRF in this case (TS bits must not be 111).

If external clock mode 1 and external clock mode 2 are enabled at the same time, the external clock input is ETRF.

Bits 13:12 **ETPS[1:0]**: External trigger prescaler

External trigger signal ETRP frequency must be at most 1/4 of TIMxCLK frequency. A prescaler can be enabled to reduce ETRP frequency. It is useful when inputting fast external clocks.

00: Prescaler OFF
01: ETRP frequency divided by 2
10: ETRP frequency divided by 4
11: ETRP frequency divided by 8

Bits 11:8 **ETF[3:0]**: External trigger filter

This bit-field then defines the frequency used to sample ETRP signal and the length of the digital filter applied to ETRP. The digital filter is made of an event counter in which N consecutive events are needed to validate a transition on the output:

0000: No filter, sampling is done at f_{DTS}
0001: $f_{SAMPLING}=f_{CK_INT}$, N=2
0010: $f_{SAMPLING}=f_{CK_INT}$, N=4
0011: $f_{SAMPLING}=f_{CK_INT}$, N=8
0100: $f_{SAMPLING}=f_{DTS}/2$, N=6
0101: $f_{SAMPLING}=f_{DTS}/2$, N=8
0110: $f_{SAMPLING}=f_{DTS}/4$, N=6
0111: $f_{SAMPLING}=f_{DTS}/4$, N=8
1000: $f_{SAMPLING}=f_{DTS}/8$, N=6
1001: $f_{SAMPLING}=f_{DTS}/8$, N=8
1010: $f_{SAMPLING}=f_{DTS}/16$, N=5
1011: $f_{SAMPLING}=f_{DTS}/16$, N=6
1100: $f_{SAMPLING}=f_{DTS}/16$, N=8
1101: $f_{SAMPLING}=f_{DTS}/32$, N=5
1110: $f_{SAMPLING}=f_{DTS}/32$, N=6
1111: $f_{SAMPLING}=f_{DTS}/32$, N=8

Bit 7 **MSM:** Master/slave mode

0: No action
1: The effect of an event on the trigger input (TRGI) is delayed to allow a perfect synchronization between the current timer and its slaves (through TRGO). It is useful if we want to synchronize several timers on a single external event.

Bits 6:4 **TS[2:0]:** Trigger selection

This bit-field selects the trigger input to be used to synchronize the counter.

000: Internal Trigger 0 (ITR0)
001: Internal Trigger 1 (ITR1)
010: Internal Trigger 2 (ITR2)
011: Internal Trigger 3 (ITR3)
100: TI1 Edge Detector (TI1F_ED)
101: Filtered Timer Input 1 (TI1FP1)
110: Filtered Timer Input 2 (TI2FP2)
111: External Trigger input (ETRF)

See *Table 197: TIMx internal trigger connection on page 975* for more details on ITRx meaning for each Timer.

Note: These bits must be changed only when they are not used (e.g. when SMS=000) to avoid wrong edge detections at the transition.

Note: The other bit is at position 16 in the same register

Bit 3 **OCCS:** OCREF clear selection

This bit is used to select the OCREF clear source.

0: OCREF_CLR_INT is not connected (reserved configuration)
1: OCREF_CLR_INT is connected to ETRF

Bits 16, 2, 1, 0 **SMS[3:0]:** Slave mode selection

When external signals are selected the active edge of the trigger signal (TRGI) is linked to the polarity selected on the external input (see Input Control register and Control Register description.

0000: Slave mode disabled - if CEN = '1' then the prescaler is clocked directly by the internal clock.

0001: Encoder mode 1 - Counter counts up/down on TI1FP1 edge depending on TI2FP2 level.

0010: Encoder mode 2 - Counter counts up/down on TI2FP2 edge depending on TI1FP1 level.

0011: Encoder mode 3 - Counter counts up/down on both TI1FP1 and TI2FP2 edges depending on the level of the other input.

0100: Reset Mode - Rising edge of the selected trigger input (TRGI) reinitializes the counter and generates an update of the registers.

0101: Gated Mode - The counter clock is enabled when the trigger input (TRGI) is high. The counter stops (but is not reset) as soon as the trigger becomes low. Both start and stop of the counter are controlled.

0110: Trigger Mode - The counter starts at a rising edge of the trigger TRGI (but it is not reset). Only the start of the counter is controlled.

0111: External Clock Mode 1 - Rising edges of the selected trigger (TRGI) clock the counter.

1000: Combined reset + trigger mode - Rising edge of the selected trigger input (TRGI) reinitializes the counter, generates an update of the registers and starts the counter.

Codes above 1000: Reserved.

Note: The gated mode must not be used if TI1F_ED is selected as the trigger input (TS=100). Indeed, TI1F_ED outputs 1 pulse for each transition on TI1F, whereas the gated mode checks the level of the trigger signal.

Note: The clock of the slave peripherals (timer, ADC, ...) receiving the TRGO or the TRGO2 signals must be enabled prior to receive events from the master timer, and the clock frequency (prescaler) must not be changed on-the-fly while triggers are received from the master timer.

Table 197. TIMx internal trigger connection

Slave TIM	ITR0 (TS = 000)	ITR1 (TS = 001)	ITR2 (TS = 010)	ITR3 (TS = 011)
TIM1	TIM15	TIM2	TIM3	TIM4
TIM8	TIM1	TIM2	TIM4	TIM5

30.4.4 TIMx DMA/interrupt enable register (TIMx_DIER)(x = 1, 8)

Address offset: 0x0C

Reset value: 0x0000

15	14	13	12	11	10	9	8	7	6	5	4	3	2	1	0
Res.	TDE	COMDE	CC4DE	CC3DE	CC2DE	CC1DE	UDE	BIE	TIE	COMIE	CC4IE	CC3IE	CC2IE	CC1IE	UIE
	rw	rw	rw	rw	rw	rw	rw	rw	rw	rw	rw	rw	rw	rw	rw

Bit 15 Reserved, must be kept at reset value.

Bit 14 **TDE**: Trigger DMA request enable
0: Trigger DMA request disabled
1: Trigger DMA request enabled

Bit 13 **COMDE**: COM DMA request enable
0: COM DMA request disabled
1: COM DMA request enabled

Bit 12 **CC4DE**: Capture/Compare 4 DMA request enable
0: CC4 DMA request disabled
1: CC4 DMA request enabled

Bit 11 **CC3DE**: Capture/Compare 3 DMA request enable
0: CC3 DMA request disabled
1: CC3 DMA request enabled

Bit 10 **CC2DE**: Capture/Compare 2 DMA request enable
0: CC2 DMA request disabled
1: CC2 DMA request enabled

Bit 9 **CC1DE**: Capture/Compare 1 DMA request enable
0: CC1 DMA request disabled
1: CC1 DMA request enabled

Bit 8 **UDE**: Update DMA request enable
0: Update DMA request disabled
1: Update DMA request enabled

Bit 7 **BIE**: Break interrupt enable
0: Break interrupt disabled
1: Break interrupt enabled

Bit 6 **TIE**: Trigger interrupt enable
0: Trigger interrupt disabled
1: Trigger interrupt enabled

Bit 5 **COMIE**: COM interrupt enable
0: COM interrupt disabled
1: COM interrupt enabled

Bit 4 **CC4IE**: Capture/Compare 4 interrupt enable
0: CC4 interrupt disabled
1: CC4 interrupt enabled

Bit 3 **CC3IE**: Capture/Compare 3 interrupt enable
0: CC3 interrupt disabled
1: CC3 interrupt enabled

Bit 2 **CC2IE**: Capture/Compare 2 interrupt enable
0: CC2 interrupt disabled
1: CC2 interrupt enabled

Bit 1 **CC1IE**: Capture/Compare 1 interrupt enable
0: CC1 interrupt disabled
1: CC1 interrupt enabled

Bit 0 **UIE**: Update interrupt enable
0: Update interrupt disabled
1: Update interrupt enabled

30.4.5 TIMx status register (TIMx_SR)(x = 1, 8)

Address offset: 0x10

Reset value: 0x0000 0000

31	30	29	28	27	26	25	24	23	22	21	20	19	18	17	16
Res.	Res.	Res.	Res.	Res.	Res.	Res.	Res.	Res.	Res.	Res.	Res.	Res.	Res.	CC6IF	CC5IF
														rc_w0	rc_w0

15	14	13	12	11	10	9	8	7	6	5	4	3	2	1	0
Res.	Res.	SBIF	CC4OF	CC3OF	CC2OF	CC1OF	B2IF	BIF	TIF	COMIF	CC4IF	CC3IF	CC2IF	CC1IF	UIF
		rc_w0	rc_w0	rc_w0	rc_w0	rc_w0	rc_w0	rc_w0	rc_w0	rc_w0	rc_w0	rc_w0	rc_w0	rc_w0	rc_w0

Bits 31:18 Reserved, must be kept at reset value.

Bit 17 **CC6IF**: Compare 6 interrupt flag
Refer to CC1IF description (Note: Channel 6 can only be configured as output)

Bit 16 **CC5IF**: Compare 5 interrupt flag
Refer to CC1IF description (Note: Channel 5 can only be configured as output)

Bits 15:14 Reserved, must be kept at reset value.

Bit 13 **SBIF**: System Break interrupt flag
This flag is set by hardware as soon as the system break input goes active. It can be cleared by software if the system break input is not active.
This flag must be reset to re-start PWM operation.
0: No break event occurred.
1: An active level has been detected on the system break input. An interrupt is generated if BIE=1 in the TIMx_DIER register.

Bit 12 **CC4OF**: Capture/Compare 4 overcapture flag
Refer to CC1OF description

Bit 11 **CC3OF**: Capture/Compare 3 overcapture flag
Refer to CC1OF description

Bit 10 **CC2OF**: Capture/Compare 2 overcapture flag
Refer to CC1OF description

Bit 9 **CC1OF**: Capture/Compare 1 overcapture flag

This flag is set by hardware only when the corresponding channel is configured in input capture mode. It is cleared by software by writing it to ‘0’.

0: No overcapture has been detected.

1: The counter value has been captured in TIMx_CCR1 register while CC1IF flag was already set

Bit 8 **B2IF**: Break 2 interrupt flag

This flag is set by hardware as soon as the break 2 input goes active. It can be cleared by software if the break 2 input is not active.

0: No break event occurred.

1: An active level has been detected on the break 2 input. An interrupt is generated if BIE=1 in the TIMx_DIER register.

Bit 7 **BIF**: Break interrupt flag

This flag is set by hardware as soon as the break input goes active. It can be cleared by software if the break input is not active.

0: No break event occurred.

1: An active level has been detected on the break input. An interrupt is generated if BIE=1 in the TIMx_DIER register.

Bit 6 **TIF**: Trigger interrupt flag

This flag is set by hardware on the TRG trigger event (active edge detected on TRGI input when the slave mode controller is enabled in all modes but gated mode. It is set when the counter starts or stops when gated mode is selected. It is cleared by software.

0: No trigger event occurred.

1: Trigger interrupt pending.

Bit 5 **COMIF**: COM interrupt flag

This flag is set by hardware on COM event (when Capture/compare Control bits - CCxE, CCxNE, OCxM - have been updated). It is cleared by software.

0: No COM event occurred.

1: COM interrupt pending.

Bit 4 **CC4IF**: Capture/Compare 4 interrupt flag

Refer to CC1IF description

Bit 3 **CC3IF**: Capture/Compare 3 interrupt flag

Refer to CC1IF description

Bit 2 **CC2IF**: Capture/Compare 2 interrupt flag

Refer to CC1IF description

Bit 1 **CC1IF**: Capture/Compare 1 interrupt flag

This flag is set by hardware. It is cleared by software (input capture or output compare mode) or by reading the TIMx_CCR1 register (input capture mode only).

0: No compare match / No input capture occurred

1: A compare match or an input capture occurred.

If channel CC1 is configured as output: this flag is set when he content of the counter TIMx_CNT matches the content of the TIMx_CCR1 register. When the content of TIMx_CCR1 is greater than the content of TIMx_ARR, the CC1IF bit goes high on the counter overflow (in up-counting and up/down-counting modes) or underflow (in down-counting mode). There are 3 possible options for flag setting in center-aligned mode, refer to the CMS bits in the TIMx_CR1 register for the full description.

If channel CC1 is configured as input: this bit is set when counter value has been captured in TIMx_CCR1 register (an edge has been detected on IC1, as per the edge sensitivity defined with the CC1P and CC1NP bits setting, in TIMx_CCER).

Bit 0 **UIF**: Update interrupt flag

This bit is set by hardware on an update event. It is cleared by software.

0: No update occurred.

1: Update interrupt pending. This bit is set by hardware when the registers are updated:

– At overflow or underflow regarding the repetition counter value (update if repetition counter = 0) and if the UDIS=0 in the TIMx_CR1 register.

– When CNT is reinitialized by software using the UG bit in TIMx_EGR register, if URS=0 and UDIS=0 in the TIMx_CR1 register.

– When CNT is reinitialized by a trigger event (refer to *Section 30.4.3: TIMx slave mode control register (TIMx_SMCR)(x = 1, 8)*), if URS=0 and UDIS=0 in the TIMx_CR1 register.

30.4.6 TIMx event generation register (TIMx_EGR)(x = 1, 8)

Address offset: 0x14

Reset value: 0x0000

15	14	13	12	11	10	9	8	7	6	5	4	3	2	1	0
Res.	Res.	Res.	Res.	Res.	Res.	Res.	B2G	BG	TG	COMG	CC4G	CC3G	CC2G	CC1G	UG
							w	w	w	w	w	w	w	w	w

Bits 15:9 Reserved, must be kept at reset value.

Bit 8 **B2G**: Break 2 generation

This bit is set by software in order to generate an event, it is automatically cleared by hardware.

0: No action

1: A break 2 event is generated. MOE bit is cleared and B2IF flag is set. Related interrupt can occur if enabled.

Bit 7 **BG**: Break generation

This bit is set by software in order to generate an event, it is automatically cleared by hardware.

0: No action

1: A break event is generated. MOE bit is cleared and BIF flag is set. Related interrupt or DMA transfer can occur if enabled.

Bit 6 **TG**: Trigger generation

This bit is set by software in order to generate an event, it is automatically cleared by hardware.

0: No action

1: The TIF flag is set in TIMx_SR register. Related interrupt or DMA transfer can occur if enabled.

Bit 5 **COMG**: Capture/Compare control update generation

This bit can be set by software, it is automatically cleared by hardware

0: No action

1: When CCPC bit is set, it allows CCxE, CCxNE and OCxM bits to be updated.

Note: This bit acts only on channels having a complementary output.

Bit 4 **CC4G**: Capture/Compare 4 generation

Refer to CC1G description

Bit 3 **CC3G**: Capture/Compare 3 generation

Refer to CC1G description

Bit 2 **CC2G**: Capture/Compare 2 generation
Refer to CC1G description

Bit 1 **CC1G**: Capture/Compare 1 generation
This bit is set by software in order to generate an event, it is automatically cleared by hardware.
0: No action
1: A capture/compare event is generated on channel 1:
If channel CC1 is configured as output:
CC1IF flag is set, Corresponding interrupt or DMA request is sent if enabled.
If channel CC1 is configured as input:
The current value of the counter is captured in TIMx_CCR1 register. The CC1IF flag is set, the corresponding interrupt or DMA request is sent if enabled. The CC1OF flag is set if the CC1IF flag was already high.

Bit 0 **UG**: Update generation
This bit can be set by software, it is automatically cleared by hardware.
0: No action
1: Reinitialize the counter and generates an update of the registers. The prescaler internal counter is also cleared (the prescaler ratio is not affected). The counter is cleared if the center-aligned mode is selected or if DIR=0 (upcounting), else it takes the auto-reload value (TIMx_ARR) if DIR=1 (downcounting).

30.4.7 TIMx capture/compare mode register 1 [alternate] (TIMx_CCMR1)(x = 1, 8)

Address offset: 0x18

Reset value: 0x0000 0000

The same register can be used for input capture mode (this section) or for output compare mode (next section). The direction of a channel is defined by configuring the corresponding CCxS bits. All the other bits of this register have a different function for input capture and for output compare modes. It is possible to combine both modes independently (e.g. channel 1 in input capture mode and channel 2 in output compare mode).

Input capture mode:

31	30	29	28	27	26	25	24	23	22	21	20	19	18	17	16
Res.	Res.	Res.	Res.	Res.	Res.	Res.	Res.	Res.	Res.	Res.	Res.	Res.	Res.	Res.	Res.

15	14	13	12	11	10	9	8	7	6	5	4	3	2	1	0
IC2F[3:0]				IC2PSC[1:0]		CC2S[1:0]		IC1F[3:0]				IC1PSC[1:0]		CC1S[1:0]	
rw	rw	rw	rw	rw	rw	rw	rw	rw	rw	rw	rw	rw	rw	rw	rw

Bits 31:16 Reserved, must be kept at reset value.

Bits 15:12 **IC2F[3:0]**: Input capture 2 filter
Refer to IC1F[3:0] description.

Bits 11:10 **IC2PSC[1:0]**: Input capture 2 prescaler
Refer to OC1PSC[1:0] description.

Bits 9:8 **CC2S[1:0]**: Capture/Compare 2 selection

This bit-field defines the direction of the channel (input/output) as well as the used input.

00: CC2 channel is configured as output
01: CC2 channel is configured as input, IC2 is mapped on TI2
10: CC2 channel is configured as input, IC2 is mapped on TI1
11: CC2 channel is configured as input, IC2 is mapped on TRC. This mode is working only if an internal trigger input is selected through TS bit (TIMx_SMCR register)

Note: CC2S bits are writable only when the channel is OFF (CC2E = '0' in TIMx_CCER).

Bits 7:4 **IC1F[3:0]**: Input capture 1 filter

This bit-field defines the frequency used to sample TI1 input and the length of the digital filter applied to TI1. The digital filter is made of an event counter in which N consecutive events are needed to validate a transition on the output:

0000: No filter, sampling is done at f_{DTS}
0001: $f_{SAMPLING}=f_{CK_INT}$, N=2
0010: $f_{SAMPLING}=f_{CK_INT}$, N=4
0011: $f_{SAMPLING}=f_{CK_INT}$, N=8
0100: $f_{SAMPLING}=f_{DTS}/2$, N=6
0101: $f_{SAMPLING}=f_{DTS}/2$, N=8
0110: $f_{SAMPLING}=f_{DTS}/4$, N=6
0111: $f_{SAMPLING}=f_{DTS}/4$, N=8
1000: $f_{SAMPLING}=f_{DTS}/8$, N=6
1001: $f_{SAMPLING}=f_{DTS}/8$, N=8
1010: $f_{SAMPLING}=f_{DTS}/16$, N=5
1011: $f_{SAMPLING}=f_{DTS}/16$, N=6
1100: $f_{SAMPLING}=f_{DTS}/16$, N=8
1101: $f_{SAMPLING}=f_{DTS}/32$, N=5
1110: $f_{SAMPLING}=f_{DTS}/32$, N=6
1111: $f_{SAMPLING}=f_{DTS}/32$, N=8

Bits 3:2 **IC1PSC[1:0]**: Input capture 1 prescaler

This bit-field defines the ratio of the prescaler acting on CC1 input (IC1). The prescaler is reset as soon as CC1E='0' (TIMx_CCER register).

00: no prescaler, capture is done each time an edge is detected on the capture input
01: capture is done once every 2 events
10: capture is done once every 4 events
11: capture is done once every 8 events

Bits 1:0 **CC1S[1:0]**: Capture/Compare 1 Selection

This bit-field defines the direction of the channel (input/output) as well as the used input.

00: CC1 channel is configured as output
01: CC1 channel is configured as input, IC1 is mapped on TI1
10: CC1 channel is configured as input, IC1 is mapped on TI2
11: CC1 channel is configured as input, IC1 is mapped on TRC. This mode is working only if an internal trigger input is selected through TS bit (TIMx_SMCR register)

Note: CC1S bits are writable only when the channel is OFF (CC1E = '0' in TIMx_CCER).

30.4.8 TIMx capture/compare mode register 1 [alternate] (TIMx_CCMR1)(x = 1, 8)

Address offset: 0x18

Reset value: 0x0000 0000

The same register can be used for output compare mode (this section) or for input capture mode (previous section). The direction of a channel is defined by configuring the

corresponding CCxS bits. All the other bits of this register have a different function for input capture and for output compare modes. It is possible to combine both modes independently (e.g. channel 1 in input capture mode and channel 2 in output compare mode).

Output compare mode:

31	30	29	28	27	26	25	24	23	22	21	20	19	18	17	16
Res.	Res.	Res.	Res.	Res.	Res.	Res.	OC2M[3]	Res.	Res.	Res.	Res.	Res.	Res.	Res.	OC1M[3]
							rw								rw

15	14	13	12	11	10	9	8	7	6	5	4	3	2	1	0
OC2 CE	OC2M[2:0]			OC2 PE	OC2 FE	CC2S[1:0]		OC1 CE	OC1M[2:0]			OC1 PE	OC1 FE	CC1S[1:0]	
rw	rw	rw	rw	rw	rw	rw	rw	rw	rw	rw	rw	rw	rw	rw	rw

Bits 31:25 Reserved, must be kept at reset value.

Bits 23:17 Reserved, must be kept at reset value.

Bit 15 **OC2CE:** Output Compare 2 clear enable
Refer to OC1CE description.

Bits 24, 14:12 **OC2M[3:0]**: Output Compare 2 mode
Refer to OC1M[3:0] description.

Bit 11 **OC2PE**: Output Compare 2 preload enable
Refer to OC1PE description.

Bit 10 **OC2FE**: Output Compare 2 fast enable
Refer to OC1FE description.

Bits 9:8 **CC2S[1:0]**: Capture/Compare 2 selection
This bit-field defines the direction of the channel (input/output) as well as the used input.
00: CC2 channel is configured as output
01: CC2 channel is configured as input, IC2 is mapped on TI2
10: CC2 channel is configured as input, IC2 is mapped on TI1
11: CC2 channel is configured as input, IC2 is mapped on TRC. This mode is working only if an internal trigger input is selected through the TS bit (TIMx_SMCR register)

Note: CC2S bits are writable only when the channel is OFF (CC2E = '0' in TIMx_CCER).

Bit 7 **OC1CE:** Output Compare 1 clear enable
0: OC1Ref is not affected by the ocref_clr_int signal
1: OC1Ref is cleared as soon as a High level is detected on ocref_clr_int signal (OCREF_CLR input or ETRF input)

Bits 16, 6:4 **OC1M[3:0]**: Output Compare 1 mode

These bits define the behavior of the output reference signal OC1REF from which OC1 and OC1N are derived. OC1REF is active high whereas OC1 and OC1N active level depends on CC1P and CC1NP bits.

0000: Frozen - The comparison between the output compare register TIMx_CCR1 and the counter TIMx_CNT has no effect on the outputs.(this mode is used to generate a timing base).

0001: Set channel 1 to active level on match. OC1REF signal is forced high when the counter TIMx_CNT matches the capture/compare register 1 (TIMx_CCR1).

0010: Set channel 1 to inactive level on match. OC1REF signal is forced low when the counter TIMx_CNT matches the capture/compare register 1 (TIMx_CCR1).

0011: Toggle - OC1REF toggles when TIMx_CNT=TIMx_CCR1.

0100: Force inactive level - OC1REF is forced low.

0101: Force active level - OC1REF is forced high.

0110: PWM mode 1 - In upcounting, channel 1 is active as long as TIMx_CNT<TIMx_CCR1 else inactive. In downcounting, channel 1 is inactive (OC1REF=‘0’) as long as TIMx_CNT>TIMx_CCR1 else active (OC1REF=’1’).

0111: PWM mode 2 - In upcounting, channel 1 is inactive as long as TIMx_CNT<TIMx_CCR1 else active. In downcounting, channel 1 is active as long as TIMx_CNT>TIMx_CCR1 else inactive.

1000: Retrigerrable OPM mode 1 - In up-counting mode, the channel is active until a trigger event is detected (on TRGI signal). Then, a comparison is performed as in PWM mode 1 and the channels becomes active again at the next update. In down-counting mode, the channel is inactive until a trigger event is detected (on TRGI signal). Then, a comparison is performed as in PWM mode 1 and the channels becomes inactive again at the next update.

1001: Retrigerrable OPM mode 2 - In up-counting mode, the channel is inactive until a trigger event is detected (on TRGI signal). Then, a comparison is performed as in PWM mode 2 and the channels becomes inactive again at the next update. In down-counting mode, the channel is active until a trigger event is detected (on TRGI signal). Then, a comparison is performed as in PWM mode 1 and the channels becomes active again at the next update.

1010: Reserved,

1011: Reserved,

1100: Combined PWM mode 1 - OC1REF has the same behavior as in PWM mode 1. OC1REFC is the logical OR between OC1REF and OC2REF.

1101: Combined PWM mode 2 - OC1REF has the same behavior as in PWM mode 2. OC1REFC is the logical AND between OC1REF and OC2REF.

1110: Asymmetric PWM mode 1 - OC1REF has the same behavior as in PWM mode 1. OC1REFC outputs OC1REF when the counter is counting up, OC2REF when it is counting down.

1111: Asymmetric PWM mode 2 - OC1REF has the same behavior as in PWM mode 2. OC1REFC outputs OC1REF when the counter is counting up, OC2REF when it is counting down.

Note: These bits can not be modified as long as LOCK level 3 has been programmed (LOCK bits in TIMx_BDTR register) and CC1S=’00’ (the channel is configured in output).

Note: In PWM mode, the OCREF level changes only when the result of the comparison changes or when the output compare mode switches from “frozen” mode to “PWM” mode.

Note: On channels having a complementary output, this bit field is preloaded. If the CCPC bit is set in the TIMx_CR2 register then the OC1M active bits take the new value from the preloaded bits only when a COM event is generated.

Bit 3 **OC1PE**: Output Compare 1 preload enable

0: Preload register on TIMx_CCR1 disabled. TIMx_CCR1 can be written at anytime, the new value is taken in account immediately.
1: Preload register on TIMx_CCR1 enabled. Read/Write operations access the preload register. TIMx_CCR1 preload value is loaded in the active register at each update event.

Note: These bits can not be modified as long as LOCK level 3 has been programmed (LOCK bits in TIMx_BDTR register) and CC1S='00' (the channel is configured in output).

The PWM mode can be used without validating the preload register only in one pulse mode (OPM bit set in TIMx_CR1 register). Else the behavior is not guaranteed.

Bit 2 **OC1FE**: Output Compare 1 fast enable

This bit is used to accelerate the effect of an event on the trigger in input on the CC output.
0: CC1 behaves normally depending on counter and CCR1 values even when the trigger is ON. The minimum delay to activate CC1 output when an edge occurs on the trigger input is 5 clock cycles.
1: An active edge on the trigger input acts like a compare match on CC1 output. Then, OC is set to the compare level independently from the result of the comparison. Delay to sample the trigger input and to activate CC1 output is reduced to 3 clock cycles. OCFE acts only if the channel is configured in PWM1 or PWM2 mode.

Bits 1:0 **CC1S[1:0]**: Capture/Compare 1 selection

This bit-field defines the direction of the channel (input/output) as well as the used input.
00: CC1 channel is configured as output
01: CC1 channel is configured as input, IC1 is mapped on TI1
10: CC1 channel is configured as input, IC1 is mapped on TI2
11: CC1 channel is configured as input, IC1 is mapped on TRC. This mode is working only if an internal trigger input is selected through TS bit (TIMx_SMCR register)

Note: CC1S bits are writable only when the channel is OFF (CC1E = '0' in TIMx_CCER).

30.4.9 TIMx capture/compare mode register 2 [alternate] (TIMx_CCMR2)(x = 1, 8)

Address offset: 0x1C

Reset value: 0x0000 0000

The same register can be used for input capture mode (this section) or for output compare mode (next section). The direction of a channel is defined by configuring the corresponding CCxS bits. All the other bits of this register have a different function for input capture and for output compare modes. It is possible to combine both modes independently (e.g. channel 1 in input capture mode and channel 2 in output compare mode).

Input capture mode:

31	30	29	28	27	26	25	24	23	22	21	20	19	18	17	16
Res.	Res.	Res.	Res.	Res.	Res.	Res.	Res.	Res.	Res.	Res.	Res.	Res.	Res.	Res.	Res.

15	14	13	12	11	10	9	8	7	6	5	4	3	2	1	0
IC4F[3:0]				IC4PSC[1:0]		CC4S[1:0]		IC3F[3:0]				IC3PSC[1:0]		CC3S[1:0]	
rw	rw	rw	rw	rw	rw	rw	rw	rw	rw	rw	rw	rw	rw	rw	rw

Bits 31:16 Reserved, must be kept at reset value.

Bits 15:12 **IC4F[3:0]**: Input capture 4 filter
Refer to IC1F[3:0] description.

Bits 11:10 **IC4PSC[1:0]**: Input capture 4 prescaler
Refer to IC1PSC[1:0] description.

Bits 9:8 **CC4S[1:0]**: Capture/Compare 4 selection
This bit-field defines the direction of the channel (input/output) as well as the used input.
00: CC4 channel is configured as output
01: CC4 channel is configured as input, IC4 is mapped on TI4
10: CC4 channel is configured as input, IC4 is mapped on TI3
11: CC4 channel is configured as input, IC4 is mapped on TRC. This mode is working only if an internal trigger input is selected through TS bit (TIMx_SMCR register)

Note: CC4S bits are writable only when the channel is OFF (CC4E = '0' in TIMx_CCER).

Bits 7:4 **IC3F[3:0]**: Input capture 3 filter
Refer to IC1F[3:0] description.

Bits 3:2 **IC3PSC[1:0]**: Input capture 3 prescaler
Refer to IC1PSC[1:0] description.

Bits 1:0 **CC3S[1:0]**: Capture/compare 3 selection
This bit-field defines the direction of the channel (input/output) as well as the used input.
00: CC3 channel is configured as output
01: CC3 channel is configured as input, IC3 is mapped on TI3
10: CC3 channel is configured as input, IC3 is mapped on TI4
11: CC3 channel is configured as input, IC3 is mapped on TRC. This mode is working only if an internal trigger input is selected through TS bit (TIMx_SMCR register)

Note: CC3S bits are writable only when the channel is OFF (CC3E = '0' in TIMx_CCER).

30.4.10 TIMx capture/compare mode register 2 [alternate] (TIMx_CCMR2)(x = 1, 8)

Address offset: 0x1C

Reset value: 0x0000 0000

The same register can be used for output compare mode (this section) or for input capture mode (previous section). The direction of a channel is defined by configuring the corresponding CCxS bits. All the other bits of this register have a different function for input capture and for output compare modes. It is possible to combine both modes independently (e.g. channel 1 in input capture mode and channel 2 in output compare mode).

Output compare mode

31	30	29	28	27	26	25	24	23	22	21	20	19	18	17	16
Res.	Res.	Res.	Res.	Res.	Res.	Res.	OC4M[3]	Res.	Res.	Res.	Res.	Res.	Res.	Res.	OC3M[3]
							rw								rw

15	14	13	12	11	10	9	8	7	6	5	4	3	2	1	0
OC4 CE	OC4M[2:0]			OC4 PE	OC4 FE	CC4S[1:0]		OC3 CE	OC3M[2:0]			OC3 PE	OC3 FE	CC3S[1:0]	
rw	rw	rw	rw	rw	rw	rw	rw	rw	rw	rw	rw	rw	rw	rw	rw

Bits 31:25 Reserved, must be kept at reset value.

Bits 23:17 Reserved, must be kept at reset value.

Bit 15 **OC4CE**: Output compare 4 clear enable
Refer to OC1CE description.

Bits 24, 14:12 **OC4M[3:0]**: Output compare 4 mode
Refer to OC3M[3:0] description.

Bit 11 **OC4PE**: Output compare 4 preload enable
Refer to OC1PE description.

Bit 10 **OC4FE**: Output compare 4 fast enable
Refer to OC1FE description.

Bits 9:8 **CC4S[1:0]**: Capture/Compare 4 selection
This bit-field defines the direction of the channel (input/output) as well as the used input.
00: CC4 channel is configured as output
01: CC4 channel is configured as input, IC4 is mapped on TI4
10: CC4 channel is configured as input, IC4 is mapped on TI3
11: CC4 channel is configured as input, IC4 is mapped on TRC. This mode is working only if an internal trigger input is selected through TS bit (TIMx_SMCR register)

Note: CC4S bits are writable only when the channel is OFF (CC4E = '0' in TIMx_CCER).

Bit 7 **OC3CE:** Output compare 3 clear enable
Refer to OC1CE description.

Bits 16, 6:4 **OC3M[3:0]**: Output compare 3 mode
Refer to OC1M[3:0] description.

Bit 3 **OC3PE**: Output compare 3 preload enable
Refer to OC1PE description.

Bit 2 **OC3FE**: Output compare 3 fast enable
Refer to OC1FE description.

Bits 1:0 **CC3S[1:0]**: Capture/Compare 3 selection
This bit-field defines the direction of the channel (input/output) as well as the used input.
00: CC3 channel is configured as output
01: CC3 channel is configured as input, IC3 is mapped on TI3
10: CC3 channel is configured as input, IC3 is mapped on TI4
11: CC3 channel is configured as input, IC3 is mapped on TRC. This mode is working only if an internal trigger input is selected through TS bit (TIMx_SMCR register)

Note: CC3S bits are writable only when the channel is OFF (CC3E = '0' in TIMx_CCER).

30.4.11 TIMx capture/compare enable register (TIMx_CCER)(x = 1, 8)

Address offset: 0x20

Reset value: 0x0000 0000

31	30	29	28	27	26	25	24	23	22	21	20	19	18	17	16
Res.	Res.	Res.	Res.	Res.	Res.	Res.	Res.	Res.	Res.	CC6P	CC6E	Res.	Res.	CC5P	CC5E
										rw	rw			rw	rw
15	14	13	12	11	10	9	8	7	6	5	4	3	2	1	0
CC4NP	Res.	CC4P	CC4E	CC3NP	CC3NE	CC3P	CC3E	CC2NP	CC2NE	CC2P	CC2E	CC1NP	CC1NE	CC1P	CC1E
rw		rw	rw	rw	rw	rw	rw	rw	rw	rw	rw	rw	rw	rw	rw

Bits 31:22 Reserved, must be kept at reset value.

Bit 21 **CC6P**: Capture/Compare 6 output polarity
Refer to CC1P description

Bit 20 **CC6E**: Capture/Compare 6 output enable
Refer to CC1E description

Bits 19:18 Reserved, must be kept at reset value.

Bit 17 **CC5P**: Capture/Compare 5 output polarity
Refer to CC1P description

Bit 16 **CC5E**: Capture/Compare 5 output enable
Refer to CC1E description

Bit 15 **CC4NP**: Capture/Compare 4 complementary output polarity
Refer to CC1NP description

Bit 14 Reserved, must be kept at reset value.

Bit 13 **CC4P**: Capture/Compare 4 output polarity
Refer to CC1P description

Bit 12 **CC4E**: Capture/Compare 4 output enable
Refer to CC1E description

Bit 11 **CC3NP**: Capture/Compare 3 complementary output polarity
Refer to CC1NP description

Bit 10 **CC3NE**: Capture/Compare 3 complementary output enable
Refer to CC1NE description

Bit 9 **CC3P**: Capture/Compare 3 output polarity
Refer to CC1P description

Bit 8 **CC3E**: Capture/Compare 3 output enable
Refer to CC1E description

Bit 7 **CC2NP**: Capture/Compare 2 complementary output polarity
Refer to CC1NP description

Bit 6 **CC2NE**: Capture/Compare 2 complementary output enable
Refer to CC1NE description

Bit 5 **CC2P**: Capture/Compare 2 output polarity
Refer to CC1P description

Bit 4 **CC2E**: Capture/Compare 2 output enable
Refer to CC1E description

Bit 3 **CC1NP**: Capture/Compare 1 complementary output polarity
CC1 channel configured as output:
0: OC1N active high.
1: OC1N active low.
CC1 channel configured as input:
This bit is used in conjunction with CC1P to define the polarity of TI1FP1 and TI2FP1. Refer to CC1P description.

Note: This bit is not writable as soon as LOCK level 2 or 3 has been programmed (LOCK bits in TIMx_BDTR register) and CC1S="00" (channel configured as output).

On channels having a complementary output, this bit is preloaded. If the CCPC bit is set in the TIMx_CR2 register then the CC1NP active bit takes the new value from the preloaded bit only when a Commutation event is generated.

Bit 2 **CC1NE**: Capture/Compare 1 complementary output enable
0: Off - OC1N is not active. OC1N level is then function of MOE, OSSI, OSSR, OIS1, OIS1N and CC1E bits.
1: On - OC1N signal is output on the corresponding output pin depending on MOE, OSSI, OSSR, OIS1, OIS1N and CC1E bits.

On channels having a complementary output, this bit is preloaded. If the CCPC bit is set in the TIMx_CR2 register then the CC1NE active bit takes the new value from the preloaded bit only when a Commutation event is generated.

Bit 1 **CC1P**: Capture/Compare 1 output polarity
0: OC1 active high (output mode) / Edge sensitivity selection (input mode, see below)
1: OC1 active low (output mode) / Edge sensitivity selection (input mode, see below)
When CC1 channel is configured as input, both CC1NP/CC1P bits select the active polarity of TI1FP1 and TI2FP1 for trigger or capture operations.
CC1NP=0, CC1P=0: non-inverted/rising edge. The circuit is sensitive to TIxFP1 rising edge (capture or trigger operations in reset, external clock or trigger mode), TIxFP1 is not inverted (trigger operation in gated mode or encoder mode).
CC1NP=0, CC1P=1: inverted/falling edge. The circuit is sensitive to TIxFP1 falling edge (capture or trigger operations in reset, external clock or trigger mode), TIxFP1 is inverted (trigger operation in gated mode or encoder mode).
CC1NP=1, CC1P=1: non-inverted/both edges/ The circuit is sensitive to both TIxFP1 rising and falling edges (capture or trigger operations in reset, external clock or trigger mode), TIxFP1is not inverted (trigger operation in gated mode). This configuration must not be used in encoder mode.
CC1NP=1, CC1P=0: The configuration is reserved, it must not be used.

Note: This bit is not writable as soon as LOCK level 2 or 3 has been programmed (LOCK bits in TIMx_BDTR register).

On channels having a complementary output, this bit is preloaded. If the CCPC bit is set in the TIMx_CR2 register then the CC1P active bit takes the new value from the preloaded bit only when a Commutation event is generated.

Bit 0 **CC1E**: Capture/Compare 1 output enable

0: Capture mode disabled / OC1 is not active (see below)

1: Capture mode enabled / OC1 signal is output on the corresponding output pin

When CC1 channel is configured as output, the OC1 level depends on MOE, OSSI, OSSR, OIS1, OIS1N and CC1NE bits, regardless of the CC1E bits state. Refer to *Table 198* for details.

Note: On channels having a complementary output, this bit is preloaded. If the CCPC bit is set in the TIMx_CR2 register then the CC1E active bit takes the new value from the preloaded bit only when a Commutation event is generated.

Table 198. Output control bits for complementary OCx and OCxN channels with break feature

Control bits					Output states(1)	
MOE bit	**OSSI bit**	**OSSR bit**	**CCxE bit**	**CCxNE bit**	**OCx output state**	**OCxN output state**
1	X	X	0	0	Output disabled (not driven by the timer: Hi-Z) OCx=0, OCxN=0	
		0	0	1	Output disabled (not driven by the timer: Hi-Z) OCx=0	OCxREF + Polarity OCxN = OCxREF xor CCxNP
		0	1	0	OCxREF + Polarity OCx=OCxREF xor CCxP	Output Disabled (not driven by the timer: Hi-Z) OCxN=0
		X	1	1	OCREF + Polarity + dead-time	Complementary to OCREF (not OCREF) + Polarity + dead-time
		1	0	1	Off-State (output enabled with inactive state) OCx=CCxP	OCxREF + Polarity OCxN = OCxREF x or CCxNP
		1	1	0	OCxREF + Polarity OCx=OCxREF xor CCxP	Off-State (output enabled with inactive state) OCxN=CCxNP
0	0	X	X	X	Output disabled (not driven by the timer anymore). The output state is defined by the GPIO controller and can be High, Low or Hi-Z.	
	1		0	0		
			0	1	Off-State (output enabled with inactive state) Asynchronously: OCx=CCxP, OCxN=CCxNP (if BRK or BRK2 is triggered). Then (this is valid only if BRK is triggered), if the clock is present: OCx=OISx and OCxN=OISxN after a dead-time, assuming that OISx and OISxN do not correspond to OCX and OCxN both in active state (may cause a short circuit when driving switches in half-bridge configuration). **Note**: BRK2 can only be used if OSSI = OSSR = 1.	
			1	0		
			1	1		

1. When both outputs of a channel are not used (control taken over by GPIO), the OISx, OISxN, CCxP and CCxNP bits must be kept cleared.

Note: The state of the external I/O pins connected to the complementary OCx and OCxN channels depends on the OCx and OCxN channel state and the GPIO registers.

30.4.12 TIMx counter (TIMx_CNT)(x = 1, 8)

Address offset: 0x24

Reset value: 0x0000 0000

31	30	29	28	27	26	25	24	23	22	21	20	19	18	17	16
UIF CPY	Res.	Res.	Res.	Res.	Res.	Res.	Res.	Res.	Res.	Res.	Res.	Res.	Res.	Res.	Res.
r															

15	14	13	12	11	10	9	8	7	6	5	4	3	2	1	0
CNT[15:0]															
rw	rw	rw	rw	rw	rw	rw	rw	rw	rw	rw	rw	rw	rw	rw	rw

Bit 31 **UIFCPY**: UIF copy

This bit is a read-only copy of the UIF bit of the TIMx_ISR register. If the UIFREMAP bit in the TIMxCR1 is reset, bit 31 is reserved and read at 0.

Bits 30:16 Reserved, must be kept at reset value.

Bits 15:0 **CNT[15:0]**: Counter value

30.4.13 TIMx prescaler (TIMx_PSC)(x = 1, 8)

Address offset: 0x28

Reset value: 0x0000

15	14	13	12	11	10	9	8	7	6	5	4	3	2	1	0
PSC[15:0]															
rw	rw	rw	rw	rw	rw	rw	rw	rw	rw	rw	rw	rw	rw	rw	rw

Bits 15:0 **PSC[15:0]**: Prescaler value

The counter clock frequency (CK_CNT) is equal to f_{CK_PSC} / (PSC[15:0] + 1).

PSC contains the value to be loaded in the active prescaler register at each update event (including when the counter is cleared through UG bit of TIMx_EGR register or through trigger controller when configured in “reset mode”).

30.4.14 TIMx auto-reload register (TIMx_ARR)(x = 1, 8)

Address offset: 0x2C

Reset value: 0xFFFF

15	14	13	12	11	10	9	8	7	6	5	4	3	2	1	0
ARR[15:0]															
rw	rw	rw	rw	rw	rw	rw	rw	rw	rw	rw	rw	rw	rw	rw	rw

Bits 15:0 **ARR[15:0]**: Auto-reload value

ARR is the value to be loaded in the actual auto-reload register.

Refer to the *Section 30.3.1: Time-base unit on page 911* for more details about ARR update and behavior.

The counter is blocked while the auto-reload value is null.

30.4.15 TIMx repetition counter register (TIMx_RCR)(x = 1, 8)

Address offset: 0x30

Reset value: 0x0000

15	14	13	12	11	10	9	8	7	6	5	4	3	2	1	0
REP[15:0]															
rw	rw	rw	rw	rw	rw	rw	rw	rw	rw	rw	rw	rw	rw	rw	rw

Bits 15:0 **REP[15:0]**: Repetition counter value

These bits allow the user to set-up the update rate of the compare registers (i.e. periodic transfers from preload to active registers) when preload registers are enable, as well as the update interrupt generation rate, if this interrupt is enable.

Each time the REP_CNT related downcounter reaches zero, an update event is generated and it restarts counting from REP value. As REP_CNT is reloaded with REP value only at the repetition update event U_RC, any write to the TIMx_RCR register is not taken in account until the next repetition update event.

It means in PWM mode (REP+1) corresponds to:

the number of PWM periods in edge-aligned mode

the number of half PWM period in center-aligned mode.

30.4.16 TIMx capture/compare register 1 (TIMx_CCR1)(x = 1, 8)

Address offset: 0x34

Reset value: 0x0000

15	14	13	12	11	10	9	8	7	6	5	4	3	2	1	0
CCR1[15:0]															
rw	rw	rw	rw	rw	rw	rw	rw	rw	rw	rw	rw	rw	rw	rw	rw

Bits 15:0 **CCR1[15:0]**: Capture/Compare 1 value

If channel CC1 is configured as output: CCR1 is the value to be loaded in the actual capture/compare 1 register (preload value).

It is loaded permanently if the preload feature is not selected in the TIMx_CCMR1 register (bit OC1PE). Else the preload value is copied in the active capture/compare 1 register when an update event occurs.

The active capture/compare register contains the value to be compared to the counter TIMx_CNT and signaled on OC1 output.

If channel CC1 is configured as input: CR1 is the counter value transferred by the last input capture 1 event (IC1). The TIMx_CCR1 register is read-only and cannot be programmed.

30.4.17 TIMx capture/compare register 2 (TIMx_CCR2)(x = 1, 8)

Address offset: 0x38

Reset value: 0x0000

15	14	13	12	11	10	9	8	7	6	5	4	3	2	1	0
CCR2[15:0]															
rw	rw	rw	rw	rw	rw	rw	rw	rw	rw	rw	rw	rw	rw	rw	rw

Bits 15:0 **CCR2[15:0]**: Capture/Compare 2 value

If channel CC2 is configured as output: CCR2 is the value to be loaded in the actual capture/compare 2 register (preload value).

It is loaded permanently if the preload feature is not selected in the TIMx_CCMR1 register (bit OC2PE). Else the preload value is copied in the active capture/compare 2 register when an update event occurs.

The active capture/compare register contains the value to be compared to the counter TIMx_CNT and signaled on OC2 output.

If channel CC2 is configured as input: CCR2 is the counter value transferred by the last input capture 2 event (IC2). The TIMx_CCR2 register is read-only and cannot be programmed.

30.4.18 TIMx capture/compare register 3 (TIMx_CCR3)(x = 1, 8)

Address offset: 0x3C

Reset value: 0x0000

15	14	13	12	11	10	9	8	7	6	5	4	3	2	1	0
CCR3[15:0]															
rw	rw	rw	rw	rw	rw	rw	rw	rw	rw	rw	rw	rw	rw	rw	rw

Bits 15:0 **CCR3[15:0]**: Capture/Compare value

If channel CC3 is configured as output: CCR3 is the value to be loaded in the actual capture/compare 3 register (preload value).

It is loaded permanently if the preload feature is not selected in the TIMx_CCMR2 register (bit OC3PE). Else the preload value is copied in the active capture/compare 3 register when an update event occurs.

The active capture/compare register contains the value to be compared to the counter TIMx_CNT and signalled on OC3 output.

If channel CC3 is configured as input: CCR3 is the counter value transferred by the last input capture 3 event (IC3). The TIMx_CCR3 register is read-only and cannot be programmed.

30.4.19 TIMx capture/compare register 4 (TIMx_CCR4)(x = 1, 8)

Address offset: 0x40

Reset value: 0x0000

15	14	13	12	11	10	9	8	7	6	5	4	3	2	1	0
CCR4[15:0]															
rw	rw	rw	rw	rw	rw	rw	rw	rw	rw	rw	rw	rw	rw	rw	rw

Bits 15:0 **CCR4[15:0]**: Capture/Compare value

If channel CC4 is configured as output: CCR4 is the value to be loaded in the actual capture/compare 4 register (preload value).

It is loaded permanently if the preload feature is not selected in the TIMx_CCMR2 register (bit OC4PE). Else the preload value is copied in the active capture/compare 4 register when an update event occurs.

The active capture/compare register contains the value to be compared to the counter TIMx_CNT and signalled on OC4 output.

If channel CC4 is configured as input: CCR4 is the counter value transferred by the last input capture 4 event (IC4). The TIMx_CCR4 register is read-only and cannot be programmed.

30.4.20 TIMx break and dead-time register (TIMx_BDTR)(x = 1, 8)

Address offset: 0x44

Reset value: 0x0000 0000

31	30	29	28	27	26	25	24	23	22	21	20	19	18	17	16
Res.	Res.	Res.	Res.	Res.	Res.	BK2P	BK2E	BK2F[3:0]				BKF[3:0]			
						rw	rw	rw	rw	rw	rw	rw	rw	rw	rw

15	14	13	12	11	10	9	8	7	6	5	4	3	2	1	0
MOE	AOE	BKP	BKE	OSSR	OSSI	LOCK[1:0]		DTG[7:0]							
rw	rw	rw	rw	rw	rw	rw	rw	rw	rw	rw	rw	rw	rw	rw	rw

Note: As the bits BK2P, BK2E, BK2F[3:0], BKF[3:0], AOE, BKP, BKE, OSSI, OSSR and DTG[7:0] can be write-locked depending on the LOCK configuration, it can be necessary to configure all of them during the first write access to the TIMx_BDTR register.

Bits 31:26 Reserved, must be kept at reset value.

Bit 25 **BK2P**: Break 2 polarity

0: Break input BRK2 is active low

1: Break input BRK2 is active high

Note: This bit cannot be modified as long as LOCK level 1 has been programmed (LOCK bits in TIMx_BDTR register).

Note: Any write operation to this bit takes a delay of 1 APB clock cycle to become effective.

Bit 24 **BK2E**: Break 2 enable

This bit enables the complete break 2 protection (including all sources connected to bk_acth and BKIN sources, as per *Figure 267: Break and Break2 circuitry overview*).

0: Break2 function disabled

1: Break2 function enabled

Note: The BKIN2 must only be used with OSSR = OSSI = 1.

Note: This bit cannot be modified when LOCK level 1 has been programmed (LOCK bits in TIMx_BDTR register).

Note: Any write operation to this bit takes a delay of 1 APB clock cycle to become effective.

Bits 23:20 **BK2F[3:0]**: Break 2 filter

This bit-field defines the frequency used to sample BRK2 input and the length of the digital filter applied to BRK2. The digital filter is made of an event counter in which N consecutive events are needed to validate a transition on the output:

0000: No filter, BRK2 acts asynchronously

0001: $f_{SAMPLING}=f_{CK_INT}$, N=2

0010: $f_{SAMPLING}=f_{CK_INT}$, N=4

0011: $f_{SAMPLING}=f_{CK_INT}$, N=8

0100: $f_{SAMPLING}=f_{DTS}/2$, N=6

0101: $f_{SAMPLING}=f_{DTS}/2$, N=8

0110: $f_{SAMPLING}=f_{DTS}/4$, N=6

0111: $f_{SAMPLING}=f_{DTS}/4$, N=8

1000: $f_{SAMPLING}=f_{DTS}/8$, N=6

1001: $f_{SAMPLING}=f_{DTS}/8$, N=8

1010: $f_{SAMPLING}=f_{DTS}/16$, N=5

1011: $f_{SAMPLING}=f_{DTS}/16$, N=6

1100: $f_{SAMPLING}=f_{DTS}/16$, N=8

1101: $f_{SAMPLING}=f_{DTS}/32$, N=5

1110: $f_{SAMPLING}=f_{DTS}/32$, N=6

1111: $f_{SAMPLING}=f_{DTS}/32$, N=8

Note: This bit cannot be modified when LOCK level 1 has been programmed (LOCK bits in TIMx_BDTR register).

Bits 19:16 **BKF[3:0]**: Break filter

This bit-field defines the frequency used to sample BRK input and the length of the digital filter applied to BRK. The digital filter is made of an event counter in which N consecutive events are needed to validate a transition on the output:

0000: No filter, BRK acts asynchronously

0001: $f_{SAMPLING}=f_{CK_INT}$, N=2

0010: $f_{SAMPLING}=f_{CK_INT}$, N=4

0011: $f_{SAMPLING}=f_{CK_INT}$, N=8

0100: $f_{SAMPLING}=f_{DTS}/2$, N=6

0101: $f_{SAMPLING}=f_{DTS}/2$, N=8

0110: $f_{SAMPLING}=f_{DTS}/4$, N=6

0111: $f_{SAMPLING}=f_{DTS}/4$, N=8

1000: $f_{SAMPLING}=f_{DTS}/8$, N=6

1001: $f_{SAMPLING}=f_{DTS}/8$, N=8

1010: $f_{SAMPLING}=f_{DTS}/16$, N=5

1011: $f_{SAMPLING}=f_{DTS}/16$, N=6

1100: $f_{SAMPLING}=f_{DTS}/16$, N=8

1101: $f_{SAMPLING}=f_{DTS}/32$, N=5

1110: $f_{SAMPLING}=f_{DTS}/32$, N=6

1111: $f_{SAMPLING}=f_{DTS}/32$, N=8

Note: This bit cannot be modified when LOCK level 1 has been programmed (LOCK bits in TIMx_BDTR register).

Bit 15 **MOE**: Main output enable

This bit is cleared asynchronously by hardware as soon as one of the break inputs is active (BRK or BRK2). It is set by software or automatically depending on the AOE bit. It is acting only on the channels which are configured in output.

0: In response to a break 2 event. OC and OCN outputs are disabled

In response to a break event or if MOE is written to 0: OC and OCN outputs are disabled or forced to idle state depending on the OSSI bit.

1: OC and OCN outputs are enabled if their respective enable bits are set (CCxE, CCxNE in TIMx_CCER register).

See OC/OCN enable description for more details (*Section 30.4.11: TIMx capture/compare enable register (TIMx_CCER)(x = 1, 8)*).

Bit 14 **AOE**: Automatic output enable

0: MOE can be set only by software

1: MOE can be set by software or automatically at the next update event (if none of the break inputs BRK and BRK2 is active)

Note: This bit can not be modified as long as LOCK level 1 has been programmed (LOCK bits in TIMx_BDTR register).

Bit 13 **BKP**: Break polarity

0: Break input BRK is active low

1: Break input BRK is active high

Note: This bit can not be modified as long as LOCK level 1 has been programmed (LOCK bits in TIMx_BDTR register).

Note: Any write operation to this bit takes a delay of 1 APB clock cycle to become effective.

Bit 12 **BKE**: Break enable

This bit enables the complete break protection (including all sources connected to bk_acth and BKIN sources, as per *Figure 267: Break and Break2 circuitry overview*).

0: Break function disabled

1: Break function enabled

Note: This bit cannot be modified when LOCK level 1 has been programmed (LOCK bits in TIMx_BDTR register).

Note: Any write operation to this bit takes a delay of 1 APB clock cycle to become effective.

Bit 11 **OSSR**: Off-state selection for Run mode

This bit is used when MOE=1 on channels having a complementary output which are configured as outputs. OSSR is not implemented if no complementary output is implemented in the timer.

See OC/OCN enable description for more details (*Section 30.4.11: TIMx capture/compare enable register (TIMx_CCER)(x = 1, 8)*).

0: When inactive, OC/OCN outputs are disabled (the timer releases the output control which is taken over by the GPIO logic, which forces a Hi-Z state).

1: When inactive, OC/OCN outputs are enabled with their inactive level as soon as CCxE=1 or CCxNE=1 (the output is still controlled by the timer).

Note: This bit can not be modified as soon as the LOCK level 2 has been programmed (LOCK bits in TIMx_BDTR register).

Bit 10 **OSSI**: Off-state selection for Idle mode

This bit is used when MOE=0 due to a break event or by a software write, on channels configured as outputs.
See OC/OCN enable description for more details (*Section 30.4.11: TIMx capture/compare enable register (TIMx_CCER)(x = 1, 8)*).
0: When inactive, OC/OCN outputs are disabled (the timer releases the output control which is taken over by the GPIO logic and which imposes a Hi-Z state).
1: When inactive, OC/OCN outputs are first forced with their inactive level then forced to their idle level after the deadtime. The timer maintains its control over the output.

Note: This bit can not be modified as soon as the LOCK level 2 has been programmed (LOCK bits in TIMx_BDTR register).

Bits 9:8 **LOCK[1:0]**: Lock configuration

These bits offer a write protection against software errors.
00: LOCK OFF - No bit is write protected.
01: LOCK Level 1 = DTG bits in TIMx_BDTR register, OISx and OISxN bits in TIMx_CR2 register and BKE/BKP/AOE bits in TIMx_BDTR register can no longer be written.
10: LOCK Level 2 = LOCK Level 1 + CC Polarity bits (CCxP/CCxNP bits in TIMx_CCER register, as long as the related channel is configured in output through the CCxS bits) as well as OSSR and OSSI bits can no longer be written.
11: LOCK Level 3 = LOCK Level 2 + CC Control bits (OCxM and OCxPE bits in TIMx_CCMRx registers, as long as the related channel is configured in output through the CCxS bits) can no longer be written.

Note: The LOCK bits can be written only once after the reset. Once the TIMx_BDTR register has been written, their content is frozen until the next reset.

Bits 7:0 **DTG[7:0]**: Dead-time generator setup

This bit-field defines the duration of the dead-time inserted between the complementary outputs. DT correspond to this duration.
DTG[7:5]=0xx => DT=DTG[7:0]x t_{dtg} with $t_{dtg}=t_{DTS}$.
DTG[7:5]=10x => DT=(64+DTG[5:0])xt_{dtg} with $T_{dtg}=2xt_{DTS}$.
DTG[7:5]=110 => DT=(32+DTG[4:0])xt_{dtg} with $T_{dtg}=8xt_{DTS}$.
DTG[7:5]=111 => DT=(32+DTG[4:0])xt_{dtg} with $T_{dtg}=16xt_{DTS}$.
Example if T_{DTS}=125ns (8MHz), dead-time possible values are:
0 to 15875 ns by 125 ns steps,
16 us to 31750 ns by 250 ns steps,
32 us to 63us by 1 us steps,
64 us to 126 us by 2 us steps

Note: This bit-field can not be modified as long as LOCK level 1, 2 or 3 has been programmed (LOCK bits in TIMx_BDTR register).

30.4.21 TIMx DMA control register (TIMx_DCR)(x = 1, 8)

Address offset: 0x48

Reset value: 0x0000

15	14	13	12	11	10	9	8	7	6	5	4	3	2	1	0
Res.	Res.	Res.	DBL[4:0]					Res.	Res.	Res.	DBA[4:0]				
			rw	rw	rw	rw	rw				rw	rw	rw	rw	rw

Bits 15:13 Reserved, must be kept at reset value.

Bits 12:8 **DBL[4:0]**: DMA burst length

This 5-bit vector defines the length of DMA transfers (the timer recognizes a burst transfer when a read or a write access is done to the TIMx_DMAR address), i.e. the number of transfers. Transfers can be in half-words or in bytes (see example below).

00000: 1 transfer
00001: 2 transfers
00010: 3 transfers
...
10001: 18 transfers

Example: Let us consider the following transfer: DBL = 7 bytes & DBA = TIMx_CR1.

– If DBL = 7 bytes and DBA = TIMx_CR1 represents the address of the byte to be transferred, the address of the transfer should be given by the following equation:

(TIMx_CR1 address) + DBA + (DMA index), where DMA index = DBL

In this example, 7 bytes are added to (TIMx_CR1 address) + DBA, which gives us the address from/to which the data is copied. In this case, the transfer is done to 7 registers starting from the following address: (TIMx_CR1 address) + DBA

According to the configuration of the DMA Data Size, several cases may occur:

– If the DMA Data Size is configured in half-words, 16-bit data is transferred to each of the 7 registers.

– If the DMA Data Size is configured in bytes, the data is also transferred to 7 registers: the first register contains the first MSB byte, the second register, the first LSB byte and so on. So with the transfer Timer, one also has to specify the size of data transferred by DMA.

Bits 7:5 Reserved, must be kept at reset value.

Bits 4:0 **DBA[4:0]**: DMA base address

This 5-bits vector defines the base-address for DMA transfers (when read/write access are done through the TIMx_DMAR address). DBA is defined as an offset starting from the address of the TIMx_CR1 register.

Example:

00000: TIMx_CR1,
00001: TIMx_CR2,
00010: TIMx_SMCR,
...

30.4.22 TIMx DMA address for full transfer (TIMx_DMAR)(x = 1, 8)

Address offset: 0x4C

Reset value: 0x0000 0000

31	30	29	28	27	26	25	24	23	22	21	20	19	18	17	16
DMAB[31:16]															
rw	rw	rw	rw	rw	rw	rw	rw	rw	rw	rw	rw	rw	rw	rw	rw
15	14	13	12	11	10	9	8	7	6	5	4	3	2	1	0
DMAB[15:0]															
rw	rw	rw	rw	rw	rw	rw	rw	rw	rw	rw	rw	rw	rw	rw	rw

Bits 31:0 **DMAB[31:0]**: DMA register for burst accesses

A read or write operation to the DMAR register accesses the register located at the address (TIMx_CR1 address) + (DBA + DMA index) x 4

where TIMx_CR1 address is the address of the control register 1, DBA is the DMA base address configured in TIMx_DCR register, DMA index is automatically controlled by the DMA transfer, and ranges from 0 to DBL (DBL configured in TIMx_DCR).

30.4.23 TIM1 option register 1 (TIM1_OR1)

Address offset: 0x50

Reset value: 0x0000 0000

31	30	29	28	27	26	25	24	23	22	21	20	19	18	17	16
Res.	Res.	Res.	Res.	Res.	Res.	Res.	Res.	Res.	Res.	Res.	Res.	Res.	Res.	Res.	Res.

15	14	13	12	11	10	9	8	7	6	5	4	3	2	1	0
Res.	Res.	Res.	Res.	Res.	Res.	Res.	Res.	Res.	Res.	Res.	TI1_RMP	ETR_ADC3_RMP		ETR_ADC1_RMP [1:0]	
											rw	rw	rw	rw	rw

Bits 31:5 Reserved, must be kept at reset value.

Bit 4 **TI1_RMP**: Input Capture 1 remap

0: TIM1 input capture 1 is connected to I/O

1: TIM1 input capture 1 is connected to COMP1 output.

Bits 3:2 **ETR_ADC3_RMP[1:0]**: External trigger remap on ADC3 analog watchdog

00: TIM1_ETR is not connected to ADC3 AWDx. This configuration must be selected when the ETR comes from the I/O.

01: TIM1_ETR is connected to ADC3 AWD1.

10: TIM1_ETR is connected to ADC3 AWD2.

11: TIM1_ETR is connected to ADC3 AWD3.

Note: ADC3 AWDx sources are 'ORed' with the TIM1_ETR input signals. When ADC3 AWDx is used, it is necessary to make sure that the corresponding TIM1_ETR input pin is not enabled in the alternate function controller. Refer to Figure 245: TIM1 ETR input circuitry.

Bits 1:0 **ETR_ADC1_RMP[1:0]**: External trigger remap on ADC1 analog watchdog

00 : TIM1_ETR is not connected to ADC1 AWDx. This configuration must be selected when the ETR comes from the I/O.

01 : TIM1_ETR is connected to ADC1 AWD1.

10 : TIM1_ETR is connected to ADC1 AWD2.

11 : TIM1_ETR is connected to ADC1 AWD3.

Note: ADC1 AWDx sources are 'ORed' with the TIM1_ETR input signals. When ADC1 AWDx is used, it is necessary to make sure that the corresponding TIM1_ETR input pin is not enabled in the alternate function controller. Refer to Figure 245: TIM1 ETR input circuitry.

30.4.24 TIM8 option register 1 (TIM8_OR1)

Address offset: 0x50

Reset value: 0x0000 0000

31	30	29	28	27	26	25	24	23	22	21	20	19	18	17	16
Res.	Res.	Res.	Res.	Res.	Res.	Res.	Res.	Res.	Res.	Res.	Res.	Res.	Res.	Res.	Res.

15	14	13	12	11	10	9	8	7	6	5	4	3	2	1	0
Res.	Res.	Res.	Res.	Res.	Res.	Res.	Res.	Res.	Res.	Res.	TI1_RMP	ETR_ADC3_RMP		ETR_ADC2_RMP	
											rw	rw	rw	rw	rw

Bits 31:5 Reserved, must be kept at reset value.

Bit 4 **TI1_RMP**: Input Capture 1 remap

0: TIM8 input capture 1 is connected to I/O

1: TIM8 input capture 1 is connected to COMP2 output.

Bits 3:2 **ETR_ADC3_RMP**: External trigger remap on ADC3 analog watchdog

00: TIM8_ETR is not connected to ADC3 AWDx. This configuration must be selected when the ETR comes from the I/O.

01: TIM8_ETR is connected to ADC3 AWD1.

10: TIM8_ETR is connected to ADC3 AWD2.

11: TIM8_ETR is connected to ADC3 AWD3.

Note: ADC3 AWDx sources are 'ORed' with the TIM8_ETR input signals. When ADC3 AWDx is used, it is necessary to make sure that the corresponding TIM8_ETR input pin is not enabled in the alternate function controller. Refer to Figure 246: TIM8 ETR input circuitry.

Bits 1:0 **ETR_ADC2_RMP**: External trigger remap on ADC2 analog watchdog

00: TIM8_ETR is not connected to ADC2 AWDx. This configuration must be selected when the ETR comes from the I/O.

01: TIM8_ETR is connected to ADC2 AWD1.

10: TIM8_ETR is connected to ADC2 AWD2.

11: TIM8_ETR is connected to ADC2 AWD3.

Note: ADC2 AWDx sources are 'ORed' with the TIM8_ETR input signals. When ADC2 AWDx is used, it is necessary to make sure that the corresponding TIM8_ETR input pin is not enabled in the alternate function controller. Refer to Figure 246: TIM8 ETR input circuitry.

30.4.25 TIMx capture/compare mode register 3 (TIMx_CCMR3)(x = 1, 8)

Address offset: 0x54

Reset value: 0x0000 0000

The channels 5 and 6 can only be configured in output.

Output compare mode:

31	30	29	28	27	26	25	24	23	22	21	20	19	18	17	16
Res.	Res.	Res.	Res.	Res.	Res.	Res.	OC6M[3]	Res.	Res.	Res.	Res.	Res.	Res.	Res.	OC5M[3]
							rw								rw

15	14	13	12	11	10	9	8	7	6	5	4	3	2	1	0
OC6 CE	OC6M[2:0]			OC6 PE	OC6FE	Res.	Res.	OC5 CE	OC5M[2:0]			OC5PE	OC5FE	Res.	Res.
rw	rw	rw	rw	rw	rw			rw	rw	rw	rw	rw	rw		

Bits 31:25 Reserved, must be kept at reset value.

Bits 23:17 Reserved, must be kept at reset value.

Bit 15 **OC6CE**: Output compare 6 clear enable
Refer to OC1CE description.

Bits 24, 14, 13, 12 **OC6M[3:0]**: Output compare 6 mode
Refer to OC1M description.

Bit 11 **OC6PE**: Output compare 6 preload enable
Refer to OC1PE description.

Bit 10 **OC6FE**: Output compare 6 fast enable
Refer to OC1FE description.

Bits 9:8 Reserved, must be kept at reset value.

Bit 7 **OC5CE:** Output compare 5 clear enable
Refer to OC1CE description.

Bits 16, 6, 5, 4 **OC5M[3:0]**: Output compare 5 mode
Refer to OC1M description.

Bit 3 **OC5PE**: Output compare 5 preload enable
Refer to OC1PE description.

Bit 2 **OC5FE**: Output compare 5 fast enable
Refer to OC1FE description.

Bits 1:0 Reserved, must be kept at reset value.

30.4.26 TIMx capture/compare register 5 (TIMx_CCR5)(x = 1, 8)

Address offset: 0x58

Reset value: 0x0000 0000

31	30	29	28	27	26	25	24	23	22	21	20	19	18	17	16
GC5C3	GC5C2	GC5C1	Res.	Res.	Res.	Res.	Res.	Res.	Res.	Res.	Res.	Res.	Res.	Res.	Res.
rw	rw	rw													

15	14	13	12	11	10	9	8	7	6	5	4	3	2	1	0
CCR5[15:0]															
rw	rw	rw	rw	rw	rw	rw	rw	rw	rw	rw	rw	rw	rw	rw	rw

Bit 31 **GC5C3**: Group Channel 5 and Channel 3

Distortion on Channel 3 output:
0: No effect of OC5REF on OC3REFC
1: OC3REFC is the logical AND of OC3REFC and OC5REF
This bit can either have immediate effect or be preloaded and taken into account after an update event (if preload feature is selected in TIMxCCMR2).

Note: it is also possible to apply this distortion on combined PWM signals.

Bit 30 **GC5C2**: Group Channel 5 and Channel 2

Distortion on Channel 2 output:
0: No effect of OC5REF on OC2REFC
1: OC2REFC is the logical AND of OC2REFC and OC5REF
This bit can either have immediate effect or be preloaded and taken into account after an update event (if preload feature is selected in TIMxCCMR1).

Note: it is also possible to apply this distortion on combined PWM signals.

Bit 29 **GC5C1**: Group Channel 5 and Channel 1

Distortion on Channel 1 output:
0: No effect of OC5REF on OC1REFC5
1: OC1REFC is the logical AND of OC1REFC and OC5REF
This bit can either have immediate effect or be preloaded and taken into account after an update event (if preload feature is selected in TIMxCCMR1).

Note: it is also possible to apply this distortion on combined PWM signals.

Bits 28:16 Reserved, must be kept at reset value.

Bits 15:0 **CCR5[15:0]**: Capture/Compare 5 value

CCR5 is the value to be loaded in the actual capture/compare 5 register (preload value).
It is loaded permanently if the preload feature is not selected in the TIMx_CCMR3 register (bit OC5PE). Else the preload value is copied in the active capture/compare 5 register when an update event occurs.
The active capture/compare register contains the value to be compared to the counter TIMx_CNT and signaled on OC5 output.

30.4.27 TIMx capture/compare register 6 (TIMx_CCR6)(x = 1, 8)

Address offset: 0x5C

Reset value: 0x0000

15	14	13	12	11	10	9	8	7	6	5	4	3	2	1	0
CCR6[15:0]															
rw	rw	rw	rw	rw	rw	rw	rw	rw	rw	rw	rw	rw	rw	rw	rw

Bits 15:0 **CCR6[15:0]**: Capture/Compare 6 value

CCR6 is the value to be loaded in the actual capture/compare 6 register (preload value).
It is loaded permanently if the preload feature is not selected in the TIMx_CCMR3 register (bit OC6PE). Else the preload value is copied in the active capture/compare 6 register when an update event occurs.
The active capture/compare register contains the value to be compared to the counter TIMx_CNT and signaled on OC6 output.

30.4.28 TIM1 option register 2 (TIM1_OR2)

Address offset: 0x60

Reset value: 0x0000 0001

31	30	29	28	27	26	25	24	23	22	21	20	19	18	17	16
Res.	Res.	Res.	Res.	Res.	Res.	Res.	Res.	Res.	Res.	Res.	Res.	Res.	Res.	Res.	ETR SEL [2]
															rw

15	14	13	12	11	10	9	8	7	6	5	4	3	2	1	0
ETRSEL[1:0]		Res.	Res.	BK CMP2P	BK CMP1P	BKINP	BKDF1 BK0E	Res.	Res.	Res.	Res.	Res.	BK CMP2E	BK CMP1E	BKINE
rw	rw			rw	rw	rw	rw						rw	rw	rw

Bits 31:17 Reserved, must be kept at reset value.

Bits 16:14 **ETRSEL[2:0]**: ETR source selection

These bits select the ETR input source.

000: TIM1_ETR source is selected with the ETR_ADC3_RMP and ETR_ADC1_RMP bitfield in TIM1_OR1 register

001: COMP1 output connected to ETR input

010: COMP2 output connected to ETR input

Others: Reserved

Note: These bits can not be modified as long as LOCK level 1 has been programmed (LOCK bits in TIMx_BDTR register).

Bits 13:12 Reserved, must be kept at reset value.

Bit 11 **BKCMP2P**: BRK COMP2 input polarity

This bit selects the COMP2 input sensitivity. It must be programmed together with the BKP polarity bit.

0: COMP2 input is active high

1: COMP2 input is active low

Note: This bit can not be modified as long as LOCK level 1 has been programmed (LOCK bits in TIMx_BDTR register).

Bit 10 **BKCMP1P**: BRK COMP1 input polarity

This bit selects the COMP1 input sensitivity. It must be programmed together with the BKP polarity bit.

0: COMP1 input is active high

1: COMP1 input is active low

Note: This bit can not be modified as long as LOCK level 1 has been programmed (LOCK bits in TIMx_BDTR register).

Bit 9 **BKINP**: BRK BKIN input polarity

This bit selects the BKIN alternate function input sensitivity. It must be programmed together with the BKP polarity bit.

0: BKIN input is active high

1: BKIN input is active low

Note: This bit can not be modified as long as LOCK level 1 has been programmed (LOCK bits in TIMx_BDTR register).

Bit 8 **BKDF1BK0E**: BRK dfsdm1_break[0] enable

This bit enables the dfsdm1_break[0] for the timer's BRK input. dfsdm1_break[0] output is 'ORed' with the other BRK sources.

0: dfsdm1_break[0] input disabled

1: dfsdm1_break[0] input enabled

Note: This bit can not be modified as long as LOCK level 1 has been programmed (LOCK bits in TIMx_BDTR register).

Bits 7:3 Reserved, must be kept at reset value.

Bit 2 **BKCMP2E**: BRK COMP2 enable

This bit enables the COMP2 for the timer's BRK input. COMP2 output is 'ORed' with the other BRK sources.

0: COMP2 input disabled

1: COMP2 input enabled

Note: This bit can not be modified as long as LOCK level 1 has been programmed (LOCK bits in TIMx_BDTR register).

Bit 1 **BKCMP1E**: BRK COMP1 enable

This bit enables the COMP1 for the timer's BRK input. COMP1 output is 'ORed' with the other BRK sources.

0: COMP1 input disabled

1: COMP1 input enabled

Note: This bit can not be modified as long as LOCK level 1 has been programmed (LOCK bits in TIMx_BDTR register).

Bit 0 **BKINE**: BRK BKIN input enable

This bit enables the BKIN alternate function input for the timer's BRK input. BKIN input is 'ORed' with the other BRK sources.

0: BKIN input disabled

1: BKIN input enabled

Note: This bit can not be modified as long as LOCK level 1 has been programmed (LOCK bits in TIMx_BDTR register).

Note: Refer to Figure 245: TIM1 ETR input circuitry and to Figure 267: Break and Break2 circuitry overview.

30.4.29 TIM1 option register 3 (TIM1_OR3)

Address offset: 0x64

Reset value: 0x0000 0001

31	30	29	28	27	26	25	24	23	22	21	20	19	18	17	16
Res.	Res.	Res.	Res.	Res.	Res.	Res.	Res.	Res.	Res.	Res.	Res.	Res.	Res.	Res.	Res.
15	**14**	**13**	**12**	**11**	**10**	**9**	**8**	**7**	**6**	**5**	**4**	**3**	**2**	**1**	**0**
Res.	Res.	Res.	Res.	BK2 CMP2 P	BK2 CMP1 P	BK2 INP	BK2DF1 BK1E	Res.	Res.	Res.	Res.	Res.	BK2 CMP2E	BK2 CMP1E	BK2INE
				rw	rw	rw	rw						rw	rw	rw

Bits 31:12 Reserved, must be kept at reset value.

Bit 11 **BK2CMP2P**: BRK2 COMP2 input polarity

This bit selects the COMP2 input sensitivity. It must be programmed together with the BK2P polarity bit.

0: COMP2 input is active low

1: COMP2 input is active high

Note: This bit can not be modified as long as LOCK level 1 has been programmed (LOCK bits in TIMx_BDTR register).

Bit 10 **BK2CMP1P**: BRK2 COMP1 input polarity

This bit selects the COMP1 input sensitivity. It must be programmed together with the BK2P polarity bit.

0: COMP1 input is active low

1: COMP1 input is active high

Note: This bit can not be modified as long as LOCK level 1 has been programmed (LOCK bits in TIMx_BDTR register).

Bit 9 **BK2INP**: BRK2 BKIN2 input polarity

This bit selects the BKIN2 alternate function input sensitivity. It must be programmed together with the BK2P polarity bit.

0: BKIN2 input is active low

1: BKIN2 input is active high

Note: This bit can not be modified as long as LOCK level 1 has been programmed (LOCK bits in TIMx_BDTR register).

Bit 8 **BK2DF1BK1E**: BRK2 dfsdm1_break[1] enable

This bit enables the dfsdm1_break[1] for the timer's BRK2 input. dfsdm1_break[1] output is 'ORed' with the other BRK2 sources.

0: dfsdm1_break[1] input disabled

1: dfsdm1_break[1] input enabled

Note: This bit can not be modified as long as LOCK level 1 has been programmed (LOCK bits in TIMx_BDTR register).

Bits 7:3 Reserved, must be kept at reset value.

Bit 2 **BK2CMP2E**: BRK2 COMP2 enable

This bit enables the COMP2 for the timer's BRK2 input. COMP2 output is 'ORed' with the other BRK2 sources.

0: COMP2 input disabled

1: COMP2 input enabled

Note: This bit can not be modified as long as LOCK level 1 has been programmed (LOCK bits in TIMx_BDTR register).

Bit 1 **BK2CMP1E**: BRK2 COMP1 enable

This bit enables the COMP1 for the timer's BRK2 input. COMP1 output is 'ORed' with the other BRK2 sources.

0: COMP1 input disabled

1: COMP1 input enabled

Note: This bit can not be modified as long as LOCK level 1 has been programmed (LOCK bits in TIMx_BDTR register).

Bit 0 **BK2INE**: BRK2 BKIN input enable

This bit enables the BKIN2 alternate function input for the timer's BRK2 input. BKIN2 input is 'ORed' with the other BRK2 sources.

0: BKIN2 input disabled

1: BKIN2 input enabled

Note: This bit can not be modified as long as LOCK level 1 has been programmed (LOCK bits in TIMx_BDTR register).

Note: Refer to Figure 267: Break and Break2 circuitry overview.

30.4.30 TIM8 option register 2 (TIM8_OR2)

Address offset: 0x60

Reset value: 0x0000 0001

31	30	29	28	27	26	25	24	23	22	21	20	19	18	17	16
Res.	Res.	Res.	Res.	Res.	Res.	Res.	Res.	Res.	Res.	Res.	Res.	Res.	Res.	Res.	ETRSEL [2]
															rw

15	14	13	12	11	10	9	8	7	6	5	4	3	2	1	0
ETRSEL[1:0]		Res.	Res.	BK CMP2 P	BK CMP1 P	BKINP	BKDF1 BK2E	Res.	Res.	Res.	Res.	Res.	BK CMP2E	BK CMP1E	BKINE
rw	rw			rw	rw	rw	rw						rw	rw	rw

Bits 31:17 Reserved, must be kept at reset value.

Bits 16:14 **ETRSEL[2:0]**: ETR source selection

These bits select the ETR input source.

000: TIM8_ETR is selected with the ETR_ADC3_RMP and ETR_ADC2_RMP bitfield in TIM8_OR1 register

001: COMP1 output connected to ETR input

010: COMP2 output connected to ETR input

Others: Reserved

Note: These bits can not be modified as long as LOCK level 1 has been programmed (LOCK bits in TIMx_BDTR register).

Bits 13:12 Reserved, must be kept at reset value.

Bit 11 **BKCMP2P**: BRK COMP2 input polarity

This bit selects the COMP2 input sensitivity. It must be programmed together with the BKP polarity bit.

0: COMP2 input is active high

1: COMP2 input is active low

Note: This bit can not be modified as long as LOCK level 1 has been programmed (LOCK bits in TIMx_BDTR register).

Bit 10 **BKCMP1P**: BRK COMP1 input polarity

This bit selects the COMP1 input sensitivity. It must be programmed together with the BKP polarity bit.

0: COMP1 input is active high

1: COMP1 input is active low

Note: This bit can not be modified as long as LOCK level 1 has been programmed (LOCK bits in TIMx_BDTR register).

Bit 9 **BKINP**: BRK BKIN input polarity

This bit selects the BKIN alternate function input sensitivity. It must be programmed together with the BKP polarity bit.

0: BKIN input is active high

1: BKIN input is active low

Note: This bit can not be modified as long as LOCK level 1 has been programmed (LOCK bits in TIMx_BDTR register).

Bit 8 **BKDF1BK2E**: BRK dfsdm1_break[2] enable

This bit enables the dfsdm1_break[2] for the timer's BRK input. dfsdm1_break[2] output is 'ORed' with the other BRK sources.

0: dfsdm1_break[2] input disabled

1: dfsdm1_break[2] input enabled

Note: This bit can not be modified as long as LOCK level 1 has been programmed (LOCK bits in TIMx_BDTR register).

Bits 7:3 Reserved, must be kept at reset value.

Bit 2 **BKCMP2E**: BRK COMP2 enable

This bit enables the COMP2 for the timer's BRK input. COMP2 output is 'ORed' with the other BRK sources.

0: COMP2 input disabled

1: COMP2 input enabled

Note: This bit can not be modified as long as LOCK level 1 has been programmed (LOCK bits in TIMx_BDTR register).

Bit 1 **BKCMP1E**: BRK COMP1 enable

This bit enables the COMP1 for the timer's BRK input. COMP1 output is 'ORed' with the other BRK sources.

0: COMP1 input disabled

1: COMP1 input enabled

Note: This bit can not be modified as long as LOCK level 1 has been programmed (LOCK bits in TIMx_BDTR register).

Bit 0 **BKINE**: BRK BKIN input enable

This bit enables the BKIN alternate function input for the timer's BRK input. BKIN input is 'ORed' with the other BRK sources.

0: BKIN input disabled

1: BKIN input enabled

Note: This bit can not be modified as long as LOCK level 1 has been programmed (LOCK bits in TIMx_BDTR register).

Note: Refer to Figure 246: TIM8 ETR input circuitry and to Figure 267: Break and Break2 circuitry overview.

30.4.31 TIM8 option register 3 (TIM8_OR3)

Address offset: 0x64

Reset value: 0x0000 0001

31	30	29	28	27	26	25	24	23	22	21	20	19	18	17	16
Res.	Res.	Res.	Res.	Res.	Res.	Res.	Res.	Res.	Res.	Res.	Res.	Res.	Res.	Res.	Res.

15	14	13	12	11	10	9	8	7	6	5	4	3	2	1	0
Res.	Res.	Res.	Res.	BK2 CMP2 P	BK2 CMP1 P	BK2 INP	BK2DF1 BK3E	Res.	Res.	Res.	Res.	Res.	BK2 CMP2E	BK2 CMP1E	BK2INE
				rw	rw	rw	rw						rw	rw	rw

Bits 31:12 Reserved, must be kept at reset value.

Bit 11 **BK2CMP2P**: BRK2 COMP2 input polarity

This bit selects the COMP2 input sensitivity. It must be programmed together with the BK2P polarity bit.

0: COMP2 input is active low

1: COMP2 input is active high

Note: This bit can not be modified as long as LOCK level 1 has been programmed (LOCK bits in TIMx_BDTR register).

Bit 10 **BK2CMP1P**: BRK2 COMP1 input polarity

This bit selects the COMP1 input sensitivity. It must be programmed together with the BK2P polarity bit.

0: COMP1 input is active low

1: COMP1 input is active high

Note: This bit can not be modified as long as LOCK level 1 has been programmed (LOCK bits in TIMx_BDTR register).

Bit 9 **BK2INP**: BRK2 BKIN2 input polarity

This bit selects the BKIN2 alternate function input sensitivity. It must be programmed together with the BK2P polarity bit.

0: BKIN2 input is active low

1: BKIN2 input is active high

Note: This bit can not be modified as long as LOCK level 1 has been programmed (LOCK bits in TIMx_BDTR register).

Bit 8 **BK2DF1BK3E**: BRK2 dfsdm1_break[3] enable

This bit enables the dfsdm1_break[3] for the timer's BRK2 input. dfsdm1_break[3] output is 'ORed' with the other BRK2 sources.

0: dfsdm1_break[3] input disabled

1: dfsdm1_break[3] input enabled

Note: This bit can not be modified as long as LOCK level 1 has been programmed (LOCK bits in TIMx_BDTR register).

Bits 7:3 Reserved, must be kept at reset value.

Bit 2 **BK2CMP2E**: BRK2 COMP2 enable

This bit enables the COMP2 for the timer's BRK2 input. COMP2 output is 'ORed' with the other BRK2 sources.

0: COMP2 input disabled

1: COMP2 input enabled

Note: This bit can not be modified as long as LOCK level 1 has been programmed (LOCK bits in TIMx_BDTR register).

Bit 1 **BK2CMP1E**: BRK2 COMP1 enable

This bit enables the COMP1 for the timer's BRK2 input. COMP1 output is 'ORed' with the other BRK2 sources.

0: COMP1 input disabled

1: COMP1 input enabled

Note: This bit can not be modified as long as LOCK level 1 has been programmed (LOCK bits in TIMx_BDTR register).

Bit 0 **BK2INE**: BRK2 BKIN input enable

This bit enables the BKIN2 alternate function input for the timer's BRK2 input. BKIN2 input is 'ORed' with the other BRK2 sources.

0: BKIN2 input disabled

1: BKIN2 input enabled

Note: This bit can not be modified as long as LOCK level 1 has been programmed (LOCK bits in TIMx_BDTR register).

Note: Refer to Figure 267: Break and Break2 circuitry overview.

30.4.32 TIM1 register map

TIM1 registers are mapped as 16-bit addressable registers as described in the table below:

Table 199. TIM1 register map and reset values

Offset	Register name	31	30	29	28	27	26	25	24	23	22	21	20	19	18	17	16	15	14	13	12	11	10	9	8	7	6	5	4	3	2	1	0
0x00	**TIM1_CR1**	Res.	Res.	Res.	Res.	Res.	Res.	Res.	Res.	Res.	Res.	Res.	Res.	Res.	Res.	Res.	Res.	Res.	Res.	Res.	Res.	UIFREMAP	Res.	CKD [1:0]		ARPE	CMS [1:0]		DIR	OPM	URS	UDIS	CEN
	Reset value																					0		0	0	0	0	0	0	0	0	0	0
0x04	**TIM1_CR2**	Res.	Res.	Res.	Res.	Res.	Res.	Res.	Res.	MMS2[3:0]				Res.	OIS6	Res.	OIS5	Res.	OIS4	OIS3N	OIS3	OIS2N	OIS2	OIS1N	OIS1	TI1S	MMS [2:0]			CCDS	CCUS	Res.	CCPC
	Reset value									0	0	0	0		0		0		0	0	0	0	0	0	0	0	0	0	0	0	0		0
0x08	**TIM1_SMCR**	Res.	Res.	Res.	Res.	Res.	Res.	Res.	Res.	Res.	Res.	Res.	Res.	Res.	Res.	Res.	SMS[3]	ETP	ECE	ETP S [1:0]		ETF[3:0]				MSM	TS[2:0]			OCCS	SMS[2:0]		
	Reset value																0	0	0	0	0	0	0	0	0	0	0	0	0	0	0	0	0
0x0C	**TIM1_DIER**	Res.	Res.	Res.	Res.	Res.	Res.	Res.	Res.	Res.	Res.	Res.	Res.	Res.	Res.	Res.	Res.	Res.	TDE	COMDE	CC4DE	CC3DE	CC2DE	CC1DE	UDE	BIE	TIE	COMIE	CC4IE	CC3IE	CC2IE	CC1IE	UIE
	Reset value																		0	0	0	0	0	0	0	0	0	0	0	0	0	0	0
0x10	**TIM1_SR**	Res.	Res.	Res.	Res.	Res.	Res.	Res.	Res.	Res.	Res.	Res.	Res.	Res.	Res.	CC6IF	CC5IF	Res.	Res.	SBIF	CC4OF	CC3OF	CC2OF	CC1OF	B2IF	BIF	TIF	COMIF	CC4IF	CC3IF	CC2IF	CC1IF	UIF
	Reset value															0	0			0	0	0	0	0	0	0	0	0	0	0	0	0	0
0x14	**TIM1_EGR**	Res.	Res.	Res.	Res.	Res.	Res.	Res.	Res.	Res.	Res.	Res.	Res.	Res.	Res.	Res.	Res.	Res.	Res.	Res.	Res.	Res.	Res.	Res.	B2G	BG	TG	COMG	CC4G	CC3G	CC2G	CC1G	UG
	Reset value																								0	0	0	0	0	0	0	0	0
0x18	**TIM1_CCMR1** Output Compare mode	Res.	Res.	Res.	Res.	Res.	Res.	Res.	OC2M[3]	Res.	Res.	Res.	Res.	Res.	Res.	Res.	OC1M[3]	OC2CE	OC2M [2:0]			OC2PE	OC2FE	CC2S [1:0]		OC1CE	OC1M [2:0]			OC1PE	OC1FE	CC1S [1:0]	
	Reset value								0								0	0	0	0	0	0	0	0	0	0	0	0	0	0	0	0	0
	TIM1_CCMR1 Input Capture mode	Res.	Res.	Res.	Res.	Res.	Res.	Res.	Res.	Res.	Res.	Res.	Res.	Res.	Res.	Res.	Res.	IC2F[3:0]				IC2PSC [1:0]		CC2S [1:0]		IC1F[3:0]				IC1PSC [1:0]		CC1S [1:0]	
	Reset value																	0	0	0	0	0	0	0	0	0	0	0	0	0	0	0	0
0x1C	**TIM1_CCMR2** Output Compare mode	Res.	Res.	Res.	Res.	Res.	Res.	Res.	OC4M[3]	Res.	Res.	Res.	Res.	Res.	Res.	Res.	OC3M[3]	OC4CE	OC4M [2:0]			OC4PE	OC4FE	CC4S [1:0]		OC3CE	OC3M [2:0]			OC3PE	OC3FE	CC3S [1:0]	
	Reset value								0								0	0	0	0	0	0	0	0	0	0	0	0	0	0	0	0	0
	TIM1_CCMR2 Input Capture mode	Res.	Res.	Res.	Res.	Res.	Res.	Res.	Res.	Res.	Res.	Res.	Res.	Res.	Res.	Res.	Res.	IC4F[3:0]				IC4PSC [1:0]		CC4S [1:0]		IC3F[3:0]				IC3PSC [1:0]		CC3S [1:0]	
	Reset value																	0	0	0	0	0	0	0	0	0	0	0	0	0	0	0	0
0x20	**TIM1_CCER**	Res.	Res.	Res.	Res.	Res.	Res.	Res.	Res.	Res.	Res.	CC6P	CC6E	Res.	Res.	CC5P	CC5E	CC4NP	Res.	CC4P	CC4E	CC3NP	CC3NE	CC3P	CC3E	CC2NP	CC2NE	CC2P	CC2E	CC1NP	CC1NE	CC1P	CC1E
	Reset value											0	0			0	0	0		0	0	0	0	0	0	0	0	0	0	0	0	0	0

Table 199. TIM1 register map and reset values (continued)

Offset	Register name	31	30	29	28	27	26	25	24	23	22	21	20	19	18	17	16	15	14	13	12	11	10	9	8	7	6	5	4	3	2	1	0
0x24	**TIM1_CNT**	UIFCP	Res.	Res.	Res.	Res.	Res.	Res.	Res.	Res.	Res.	Res.	Res.	Res.	Res.	Res.	Res.	CNT[15:0]															
	Reset value	0																0	0	0	0	0	0	0	0	0	0	0	0	0	0	0	0
0x28	**TIM1_PSC**	Res.	Res.	Res.	Res.	Res.	Res.	Res.	Res.	Res.	Res.	Res.	Res.	Res.	Res.	Res.	Res.	PSC[15:0]															
	Reset value																	0	0	0	0	0	0	0	0	0	0	0	0	0	0	0	0
0x2C	**TIM1_ARR**	Res.	Res.	Res.	Res.	Res.	Res.	Res.	Res.	Res.	Res.	Res.	Res.	Res.	Res.	Res.	Res.	ARR[15:0]															
	Reset value																	1	1	1	1	1	1	1	1	1	1	1	1	1	1	1	1
0x30	**TIM1_RCR**	Res.	Res.	Res.	Res.	Res.	Res.	Res.	Res.	Res.	Res.	Res.	Res.	Res.	Res.	Res.	Res.	REP[15:0]															
	Reset value																	0	0	0	0	0	0	0	0	0	0	0	0	0	0	0	0
0x34	**TIM1_CCR1**	Res.	Res.	Res.	Res.	Res.	Res.	Res.	Res.	Res.	Res.	Res.	Res.	Res.	Res.	Res.	Res.	CCR1[15:0]															
	Reset value																	0	0	0	0	0	0	0	0	0	0	0	0	0	0	0	0
0x38	**TIM1_CCR2**	Res.	Res.	Res.	Res.	Res.	Res.	Res.	Res.	Res.	Res.	Res.	Res.	Res.	Res.	Res.	Res.	CCR2[15:0]															
	Reset value																	0	0	0	0	0	0	0	0	0	0	0	0	0	0	0	0
0x3C	**TIM1_CCR3**	Res.	Res.	Res.	Res.	Res.	Res.	Res.	Res.	Res.	Res.	Res.	Res.	Res.	Res.	Res.	Res.	CCR3[15:0]															
	Reset value																	0	0	0	0	0	0	0	0	0	0	0	0	0	0	0	0
0x40	**TIM1_CCR4**	Res.	Res.	Res.	Res.	Res.	Res.	Res.	Res.	Res.	Res.	Res.	Res.	Res.	Res.	Res.	Res.	CCR4[15:0]															
	Reset value																	0	0	0	0	0	0	0	0	0	0	0	0	0	0	0	0
0x44	**TIM1_BDTR**	Res.	Res.	Res.	Res.	Res.	Res.	BK2P	BK2E	BK2F[3:0]				BKF[3:0]				MOE	AOE	BKP	BKE	OSSR	OSSI	LOCK [1:0]		DT[7:0]							
	Reset value							0	0	0	0	0	0	0	0	0	0	0	0	0	0	0	0	0	0	0	0	0	0	0	0	0	0
0x48	**TIM1_DCR**	Res.	Res.	Res.	Res.	Res.	Res.	Res.	Res.	Res.	Res.	Res.	Res.	Res.	Res.	Res.	Res.	Res.	Res.	Res.	DBL[4:0]					Res.	Res.	Res.	DBA[4:0]				
	Reset value																				0	0	0	0	0				0	0	0	0	0
0x4C	**TIM1_DMAR**	DMAB[31:0]																															
	Reset value																	0	0	0	0	0	0	0	0	0	0	0	0	0	0	0	0
0x50	**TIM1_OR1**	Res.	Res.	Res.	Res.	Res.	Res.	Res.	Res.	Res.	Res.	Res.	Res.	Res.	Res.	Res.	Res.	Res.	Res.	Res.	Res.	Res.	Res.	Res.	Res.	Res.	Res.	Res.	TI1_RMP	ETR_ADC3_RMP		ETR_ADC1_RMP	
	Reset value																												0	0	0	0	0
0x54	**TIM1_CCMR3** Output Compare mode	Res.	Res.	Res.	Res.	Res.	Res.	Res.	OC6M[3]	Res.	Res.	Res.	Res.	Res.	Res.	Res.	OC5M[3]	OC6CE	OC6M [2:0]			OC6PE	OC6FE	Res.	Res.	OC5CE	OC5M [2:0]			OC5PE	OC5FE	Res.	Res.
	Reset value								0								0	0	0	0	0	0	0			0	0	0	0	0	0		

Table 199. TIM1 register map and reset values (continued)

Offset	Register name	31	30	29	28	27	26	25	24	23	22	21	20	19	18	17	16	15	14	13	12	11	10	9	8	7	6	5	4	3	2	1	0
0x58	TIM1_CCR5	GC5C3	GC5C2	GC5C1	Res.	Res.	Res.	Res.	Res.	Res.	Res.	Res.	Res.	Res.	Res.	Res.	Res.	CCR5[15:0]															
	Reset value	0	0	0														0	0	0	0	0	0	0	0	0	0	0	0	0	0	0	0
0x5C	TIM1_CCR6	Res.	Res.	Res.	Res.	Res.	Res.	Res.	Res.	Res.	Res.	Res.	Res.	Res.	Res.	Res.	Res.	CCR6[15:0]															
	Reset value																	0	0	0	0	0	0	0	0	0	0	0	0	0	0	0	0
0x60	TIM1_OR2	Res.	Res.	Res.	Res.	Res.	Res.	Res.	Res.	Res.	Res.	Res.	Res.	Res.	Res.	Res.	ETRSEL [2:0]			Res.	Res.	BKCMP2P	BKCMP1P	BKINP	BKDF1BK0E	Res.	Res.	Res.	Res.	Res.	BKCMP2E	BKCMP1E	BKINE
	Reset value																0	0	0			0	0	0	0						0	0	1
0x64	TIM1_OR3	Res.	Res.	Res.	Res.	Res.	Res.	Res.	Res.	Res.	Res.	Res.	Res.	Res.	Res.	Res.	Res.	Res.	Res.	Res.	Res.	BK2CMP2P	BK2CMP1P	BK2INP	BK2DF1BK1E	Res.	Res.	Res.	Res.	Res.	BK2CMP2E	BK2CMP1E	BK2INE
	Reset value																					0	0	0	0						0	0	1

Refer to *Section 2.2 on page 75* for the register boundary addresses.

30.4.33 TIM8 register map

TIM8 registers are mapped as 16-bit addressable registers as described in the table below:

Table 200. TIM8 register map and reset values

Offset	Register name	31	30	29	28	27	26	25	24	23	22	21	20	19	18	17	16	15	14	13	12	11	10	9	8	7	6	5	4	3	2	1	0
0x00	TIM8_CR1	Res.	Res.	Res.	Res.	Res.	Res.	Res.	Res.	Res.	Res.	Res.	Res.	Res.	Res.	Res.	Res.	Res.	Res.	Res.	Res.	UIFREMA	Res.	CKD [1:0]		ARPE	CMS [1:0]		DIR	OPM	URS	UDIS	CEN
	Reset value																					0		0	0	0	0	0	0	0	0	0	0
0x04	TIM8_CR2	Res.	Res.	Res.	Res.	Res.	Res.	Res.	Res.	MMS2[3:0]				Res.	OIS6	Res.	OIS5	Res.	OIS4	OIS3N	OIS3	OIS2N	OIS2	OIS1N	OIS1	TI1S	MMS [2:0]			CCDS	CCUS	Res.	CCPC
	Reset value									0	0	0	0		0		0		0	0	0	0	0	0	0	0	0	0	0	0	0		0
0x08	TIM8_SMCR	Res.	Res.	Res.	Res.	Res.	Res.	Res.	Res.	Res.	Res.	Res.	Res.	Res.	Res.	Res.	SMS[3]	ETP	ECE	ETP S [1:0]		ETF[3:0]				MSM	TS[2:0]				SMS[2:0]		
	Reset value																0	0	0	0	0	0	0	0	0	0	0	0	0		0	0	0
0x0C	TIM8_DIER	Res.	Res.	Res.	Res.	Res.	Res.	Res.	Res.	Res.	Res.	Res.	Res.	Res.	Res.	Res.	Res.	Res.	TDE	COMDE	CC4DE	CC3DE	CC2DE	CC1DE	UDE	BIE	TIE	COMIE	CC4IE	CC3IE	CC2IE	CC1IE	UIE
	Reset value																		0	0	0	0	0	0	0	0	0	0	0	0	0	0	0
0x10	TIM8_SR	Res.	Res.	Res.	Res.	Res.	Res.	Res.	Res.	Res.	Res.	Res.	Res.	Res.	Res.	CC6IF	CC5IF	Res.	Res.	SBIF	CC4OF	CC3OF	CC2OF	CC1OF	B2IF	BIF	TIF	COMIF	CC4IF	CC3IF	CC2IF	CC1IF	UIF
	Reset value															0	0			0	0	0	0	0	0	0	0	0	0	0	0	0	0

Table 200. TIM8 register map and reset values (continued)

Offset	Register name	31	30	29	28	27	26	25	24	23	22	21	20	19	18	17	16	15	14	13	12	11	10	9	8	7	6	5	4	3	2	1	0
0x14	**TIM8_EGR**	Res.	Res.	Res.	Res.	Res.	Res.	Res.	Res.	Res.	Res.	Res.	Res.	Res.	Res.	Res.	Res.	Res.	Res.	Res.	Res.	Res.	Res.	Res.	B2G	BG	TG	COMG	CC4G	CC3G	CC2G	CC1G	UG
	Reset value																								0	0	0	0	0	0	0	0	0
0x18	**TIM8_CCMR1** Output Compare mode	Res.	Res.	Res.	Res.	Res.	Res.	Res.	OC2M[3]	Res.	Res.	Res.	Res.	Res.	Res.	Res.	OC1M[3]	OC2CE	OC2M [2:0]			OC2PE	OC2FE	CC2S [1:0]		OC1CE	OC1M [2:0]			OC1PE	OC1FE	CC1S [1:0]	
	Reset value								0								0	0	0	0	0	0	0	0	0	0	0	0	0	0	0	0	0
	TIM8_CCMR1 Input Capture mode	Res.	Res.	Res.	Res.	Res.	Res.	Res.	Res.	Res.	Res.	Res.	Res.	Res.	Res.	Res.	Res.	IC2F[3:0]				IC2PSC [1:0]		CC2S [1:0]		IC1F[3:0]				IC1PSC [1:0]		CC1S [1:0]	
	Reset value																	0	0	0	0	0	0	0	0	0	0	0	0	0	0	0	0
0x1C	**TIM8_CCMR2** Output Compare mode	Res.	Res.	Res.	Res.	Res.	Res.	Res.	OC4M[3]	Res.	Res.	Res.	Res.	Res.	Res.	Res.	OC3M[3]	OC4CE	OC4M [2:0]			OC4PE	OC4FE	CC4S [1:0]		OC3CE	OC3M [2:0]			OC3PE	OC3FE	CC3S [1:0]	
	Reset value								0								0	0	0	0	0	0	0	0	0	0	0	0	0	0	0	0	0
	TIM8_CCMR2 Input Capture mode	Res.	Res.	Res.	Res.	Res.	Res.	Res.	Res.	Res.	Res.	Res.	Res.	Res.	Res.	Res.	Res.	IC4F[3:0]				IC4PSC [1:0]		CC4S [1:0]		IC3F[3:0]				IC3PSC [1:0]		CC3S [1:0]	
	Reset value																	0	0	0	0	0	0	0	0	0	0	0	0	0	0	0	0
0x20	**TIM8_CCER**	Res.	Res.	Res.	Res.	Res.	Res.	Res.	Res.	Res.	Res.	CC6P	CC6E	Res.	Res.	CC5P	CC5E	CC4NP	Res.	CC4P	CC4E	CC3NP	CC3NE	CC3P	CC3E	CC2NP	CC2NE	CC2P	CC2E	CC1NP	CC1NE	CC1P	CC1E
	Reset value											0	0			0	0	0		0	0	0	0	0	0	0	0	0	0	0	0	0	0
0x24	**TIM8_CNT**	UIFCPY	Res.	Res.	Res.	Res.	Res.	Res.	Res.	Res.	Res.	Res.	Res.	Res.	Res.	Res.	Res.	CNT[15:0]															
	Reset value	0																0	0	0	0	0	0	0	0	0	0	0	0	0	0	0	0
0x28	**TIM8_PSC**	Res.	Res.	Res.	Res.	Res.	Res.	Res.	Res.	Res.	Res.	Res.	Res.	Res.	Res.	Res.	Res.	PSC[15:0]															
	Reset value																	0	0	0	0	0	0	0	0	0	0	0	0	0	0	0	0
0x2C	**TIM8_ARR**	Res.	Res.	Res.	Res.	Res.	Res.	Res.	Res.	Res.	Res.	Res.	Res.	Res.	Res.	Res.	Res.	ARR[15:0]															
	Reset value																	1	1	1	1	1	1	1	1	1	1	1	1	1	1	1	1
0x30	**TIM8_RCR**	Res.	Res.	Res.	Res.	Res.	Res.	Res.	Res.	Res.	Res.	Res.	Res.	Res.	Res.	Res.	Res.	REP[15:0]															
	Reset value																	0	0	0	0	0	0	0	0	0	0	0	0	0	0	0	0
0x34	**TIMx_CCR1**	Res.	Res.	Res.	Res.	Res.	Res.	Res.	Res.	Res.	Res.	Res.	Res.	Res.	Res.	Res.	Res.	CCR1[15:0]															
	Reset value																	0	0	0	0	0	0	0	0	0	0	0	0	0	0	0	0
0x38	**TIM8_CCR2**	Res.	Res.	Res.	Res.	Res.	Res.	Res.	Res.	Res.	Res.	Res.	Res.	Res.	Res.	Res.	Res.	CCR2[15:0]															
	Reset value																	0	0	0	0	0	0	0	0	0	0	0	0	0	0	0	0
0x3C	**TIM8_CCR3**	Res.	Res.	Res.	Res.	Res.	Res.	Res.	Res.	Res.	Res.	Res.	Res.	Res.	Res.	Res.	Res.	CCR3[15:0]															
	Reset value																	0	0	0	0	0	0	0	0	0	0	0	0	0	0	0	0
0x40	**TIM8_CCR4**	Res.	Res.	Res.	Res.	Res.	Res.	Res.	Res.	Res.	Res.	Res.	Res.	Res.	Res.	Res.	Res.	CCR4[15:0]															
	Reset value																	0	0	0	0	0	0	0	0	0	0	0	0	0	0	0	0

Table 200. TIM8 register map and reset values (continued)

Offset	Register name	31	30	29	28	27	26	25	24	23	22	21	20	19	18	17	16	15	14	13	12	11	10	9	8	7	6	5	4	3	2	1	0
0x44	TIM8_BDTR	Res.	Res.	Res.	Res.	Res.	Res.	BK2P	BK2E	BK2F[3:0]				BKF[3:0]				MOE	AOE	BKP	BKE	OSSR	OSSI	LOCK [1:0]		DT[7:0]							
	Reset value							0	0	0	0	0	0	0	0	0	0	0	0	0	0	0	0	0	0	0	0	0	0	0	0	0	0
0x48	TIM8_DCR	Res.	Res.	Res.	Res.	Res.	Res.	Res.	Res.	Res.	Res.	Res.	Res.	Res.	Res.	Res.	Res.	Res.	Res.	Res.	DBL[4:0]					Res.	Res.	Res.	DBA[4:0]				
	Reset value																				0	0	0	0	0				0	0	0	0	0
0x4C	TIM8_DMAR	DMAB[31:0]																															
	Reset value																	0	0	0	0	0	0	0	0	0	0	0	0	0	0	0	0
0x50	TIM8_OR1	Res.	Res.	Res.	Res.	Res.	Res.	Res.	Res.	Res.	Res.	Res.	Res.	Res.	Res.	Res.	Res.	Res.	Res.	Res.	Res.	Res.	Res.	Res.	Res.	Res.	Res.	Res.	TI1_RMP	ETR_ADC3_RMP		ETR_ADC2_RMP	
	Reset value																												0	0	0	0	0
0x54	TIM8_CCMR3 Output Compare mode	Res.	Res.	Res.	Res.	Res.	Res.	Res.	OC6M[3]	Res.	Res.	Res.	Res.	Res.	Res.	Res.	OC5M[3]	OC6CE	OC6M [2:0]			OC6PE	OC6FE	Res.	Res.	OC5CE	OC5M [2:0]			OC5PE	OC5FE	Res.	Res.
	Reset value								0								0	0	0	0	0	0	0			0	0	0	0	0	0		
0x58	TIM8_CCR5	GC5C3	GC5C2	GC5C1	Res.	Res.	Res.	Res.	Res.	Res.	Res.	Res.	Res.	Res.	Res.	Res.	Res.	CCR5[15:0]															
	Reset value	0	0	0														0	0	0	0	0	0	0	0	0	0	0	0	0	0	0	0
0x5C	TIM8_CCR6	Res.	Res.	Res.	Res.	Res.	Res.	Res.	Res.	Res.	Res.	Res.	Res.	Res.	Res.	Res.	Res.	CCR6[15:0]															
	Reset value																	0	0	0	0	0	0	0	0	0	0	0	0	0	0	0	0
0x60	TIM8_OR2	Res.	Res.	Res.	Res.	Res.	Res.	Res.	Res.	Res.	Res.	Res.	Res.	Res.	Res.	Res.	ETRSEL [2:0]			Res.	Res.	BKCMP2P	BKCMP1P	BKINP	BKDF1BK2E	Res.	Res.	Res.	Res.	Res.	BKCMP2E	BKCMP1E	BKINE
	Reset value																0	0	0			0	0	0	0						0	0	1
0x64	TIM8_OR3	Res.	Res.	Res.	Res.	Res.	Res.	Res.	Res.	Res.	Res.	Res.	Res.	Res.	Res.	Res.	Res.	Res.	Res.	Res.	Res.	BK2CMP2P	BK2CMP1P	BK2INP	BK2DF1BK3E	Res.	Res.	Res.	Res.	Res.	BK2CMP2E	BK2CMP1E	BK2INE
	Reset value																					0	0	0	0						0	0	1

Refer to *Section 2.2 on page 75* for the register boundary addresses.

31 General-purpose timers (TIM2/TIM3/TIM4/TIM5)

31.1 TIM2/TIM3/TIM4/TIM5 introduction

The general-purpose timers consist of a 16-bit/32-bit auto-reload counter driven by a programmable prescaler.

They may be used for a variety of purposes, including measuring the pulse lengths of input signals (*input capture*) or generating output waveforms (*output compare and PWM*).

Pulse lengths and waveform periods can be modulated from a few microseconds to several milliseconds using the timer prescaler and the RCC clock controller prescalers.

The timers are completely independent, and do not share any resources. They can be synchronized together as described in *Section 31.3.19: Timer synchronization*.

31.2 TIM2/TIM3/TIM4/TIM5 main features

General-purpose TIMx timer features include:

- 16-bit (TIM3, TIM4) or 32-bit (TIM2 and TIM5) up, down, up/down auto-reload counter.
- 16-bit programmable prescaler used to divide (also “on the fly”) the counter clock frequency by any factor between 1 and 65535.
- Up to 4 independent channels for:
  - Input capture
  - Output compare
  - PWM generation (Edge- and Center-aligned modes)
  - One-pulse mode output
- Synchronization circuit to control the timer with external signals and to interconnect several timers.
- Interrupt/DMA generation on the following events:
  - Update: counter overflow/underflow, counter initialization (by software or internal/external trigger)
  - Trigger event (counter start, stop, initialization or count by internal/external trigger)
  - Input capture
  - Output compare
- Supports incremental (quadrature) encoder and hall-sensor circuitry for positioning purposes
- Trigger input for external clock or cycle-by-cycle current management

Figure 284. General-purpose timer block diagram

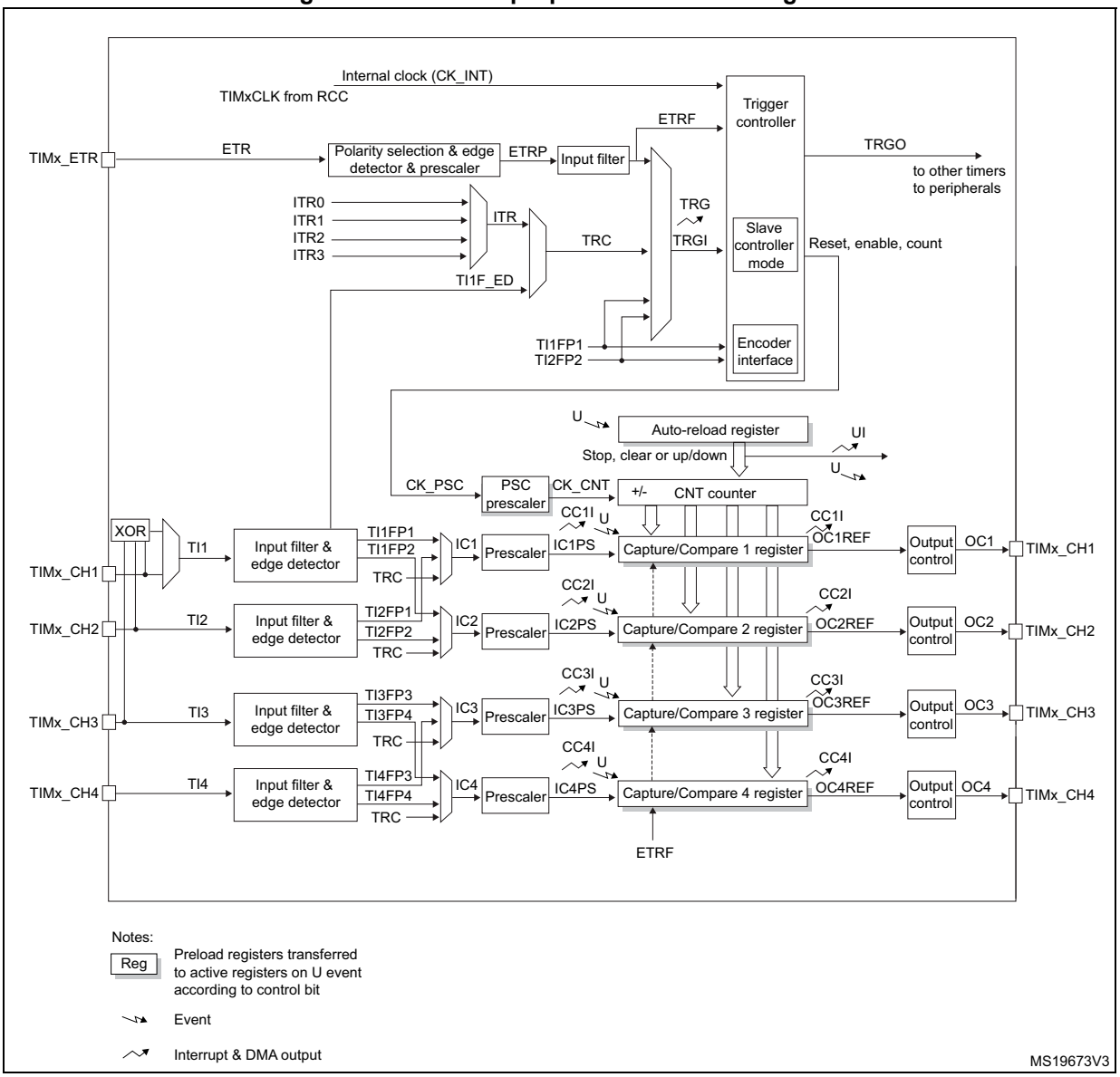

31.3 TIM2/TIM3/TIM4/TIM5 functional description

31.3.1 Time-base unit

The main block of the programmable timer is a 16-bit/32-bit counter with its related auto-reload register. The counter can count up, down or both up and down but also down or both up and down. The counter clock can be divided by a prescaler.

The counter, the auto-reload register and the prescaler register can be written or read by software. This is true even when the counter is running.

The time-base unit includes:

- Counter Register (TIMx_CNT)
- Prescaler Register (TIMx_PSC)
- Auto-Reload Register (TIMx_ARR)

The auto-reload register is preloaded. Writing to or reading from the auto-reload register accesses the preload register. The content of the preload register are transferred into the shadow register permanently or at each update event (UEV), depending on the auto-reload preload enable bit (ARPE) in TIMx_CR1 register. The update event is sent when the counter reaches the overflow (or underflow when downcounting) and if the UDIS bit equals 0 in the TIMx_CR1 register. It can also be generated by software. The generation of the update event is described in detail for each configuration.

The counter is clocked by the prescaler output CK_CNT, which is enabled only when the counter enable bit (CEN) in TIMx_CR1 register is set (refer also to the slave mode controller description to get more details on counter enabling).

Note that the actual counter enable signal CNT_EN is set 1 clock cycle after CEN.

Prescaler description

The prescaler can divide the counter clock frequency by any factor between 1 and 65536. It is based on a 16-bit counter controlled through a 16-bit/32-bit register (in the TIMx_PSC register). It can be changed on the fly as this control register is buffered. The new prescaler ratio is taken into account at the next update event.

Figure 285 and *Figure 286* give some examples of the counter behavior when the prescaler ratio is changed on the fly:

Figure 285. Counter timing diagram with prescaler division change from 1 to 2

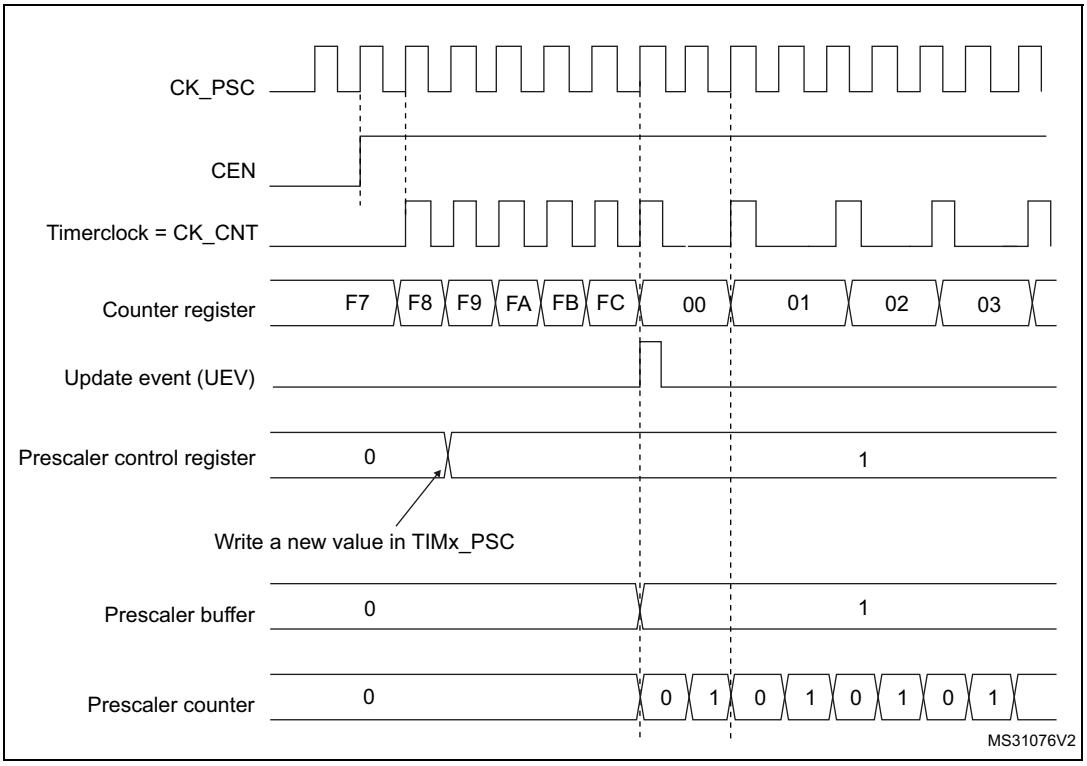

Figure 286. Counter timing diagram with prescaler division change from 1 to 4

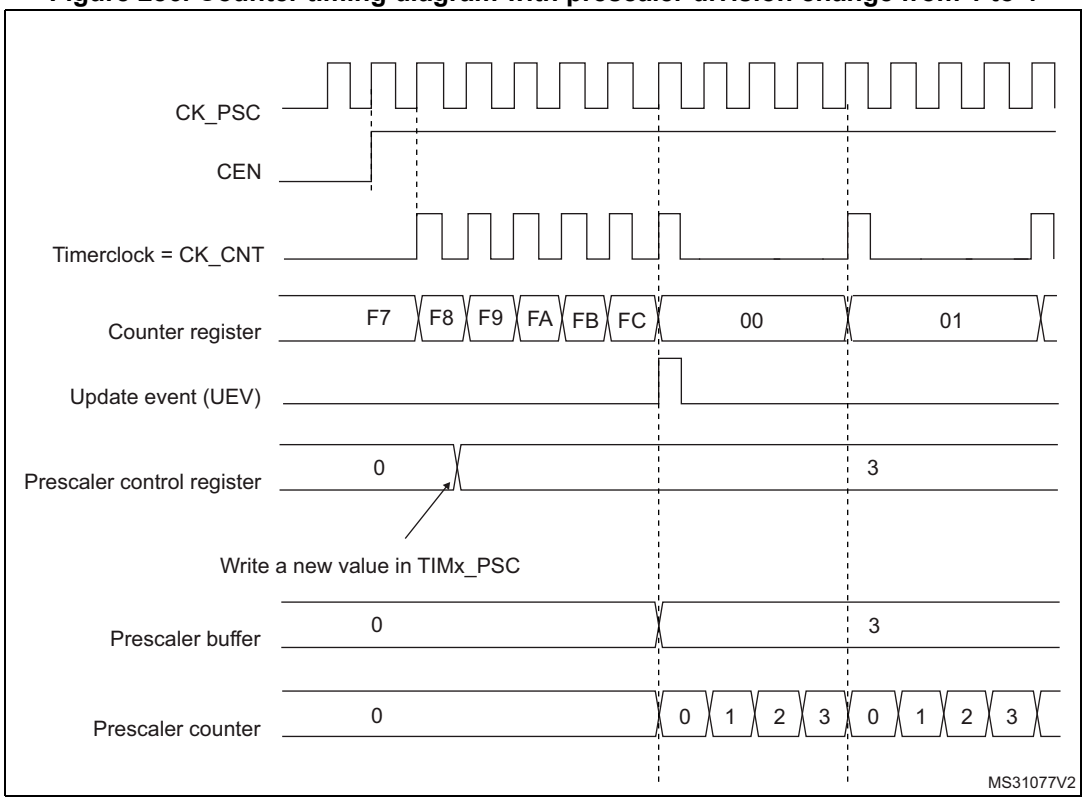

31.3.2 Counter modes

Upcounting mode

In upcounting mode, the counter counts from 0 to the auto-reload value (content of the TIMx_ARR register), then restarts from 0 and generates a counter overflow event.

An Update event can be generated at each counter overflow or by setting the UG bit in the TIMx_EGR register (by software or by using the slave mode controller).

The UEV event can be disabled by software by setting the UDIS bit in TIMx_CR1 register. This is to avoid updating the shadow registers while writing new values in the preload registers. Then no update event occurs until the UDIS bit has been written to 0. However, the counter restarts from 0, as well as the counter of the prescaler (but the prescale rate does not change). In addition, if the URS bit (update request selection) in TIMx_CR1 register is set, setting the UG bit generates an update event UEV but without setting the UIF flag (thus no interrupt or DMA request is sent). This is to avoid generating both update and capture interrupts when clearing the counter on the capture event.

When an update event occurs, all the registers are updated and the update flag (UIF bit in TIMx_SR register) is set (depending on the URS bit):

- The buffer of the prescaler is reloaded with the preload value (content of the TIMx_PSC register)
- The auto-reload shadow register is updated with the preload value (TIMx_ARR)

The following figures show some examples of the counter behavior for different clock frequencies when TIMx_ARR=0x36.

Figure 287. Counter timing diagram, internal clock divided by 1

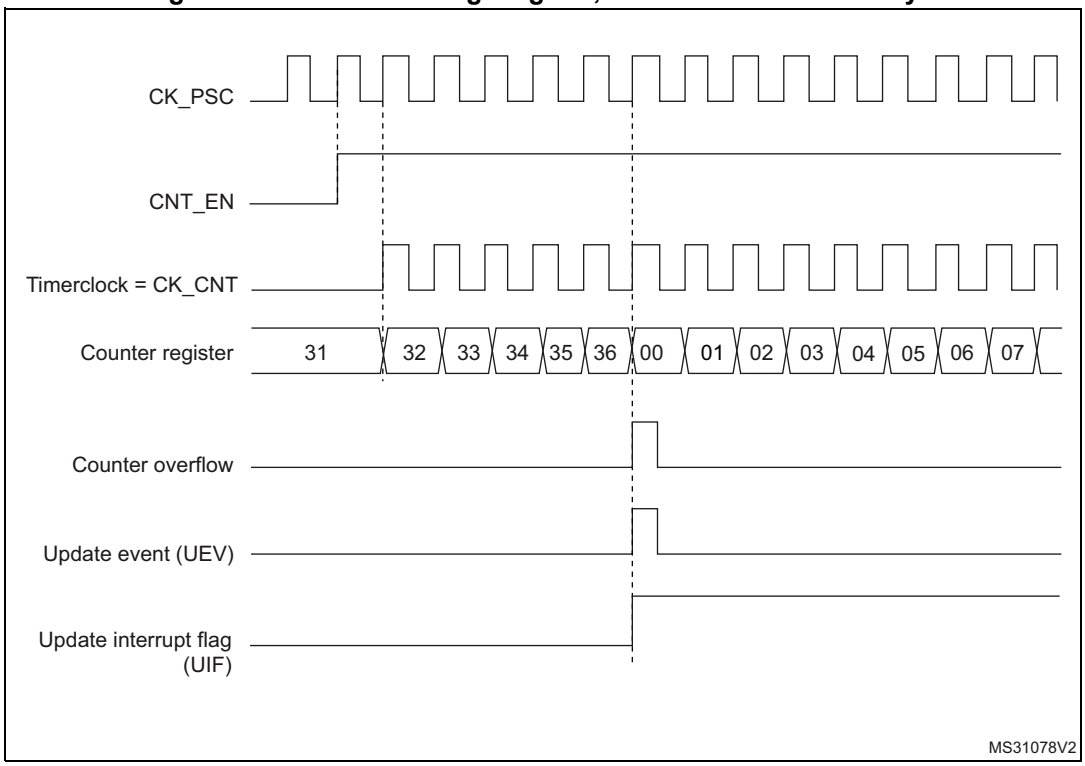

Figure 288. Counter timing diagram, internal clock divided by 2

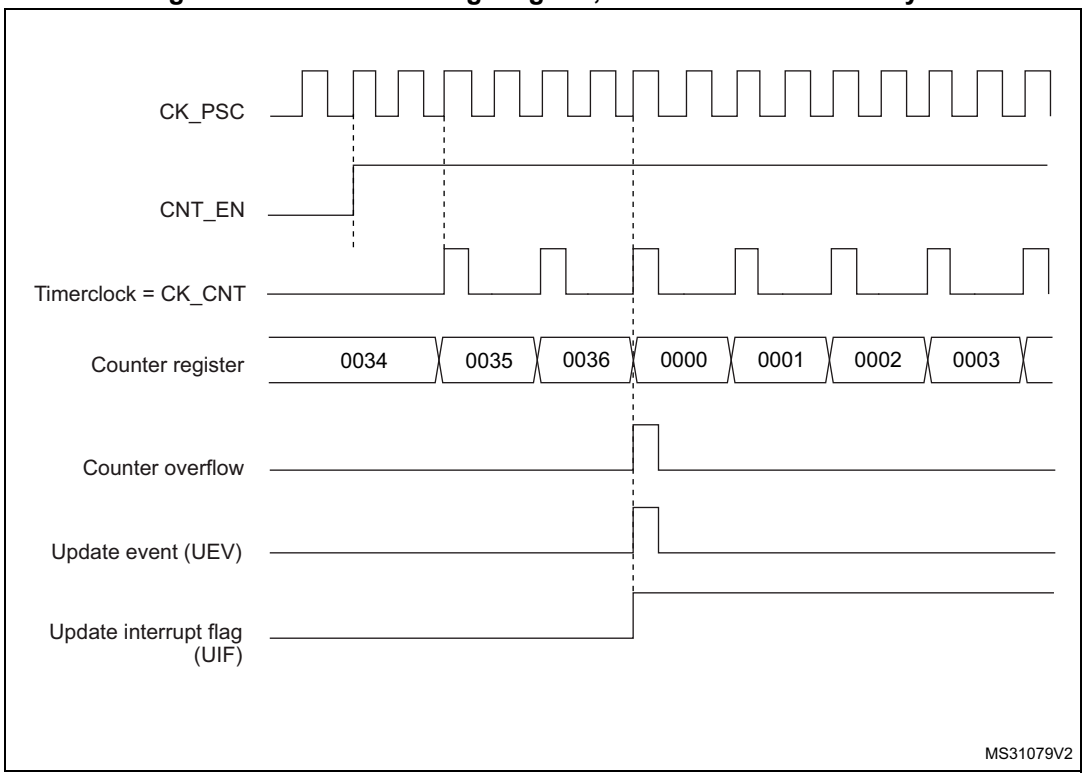

Figure 289. Counter timing diagram, internal clock divided by 4

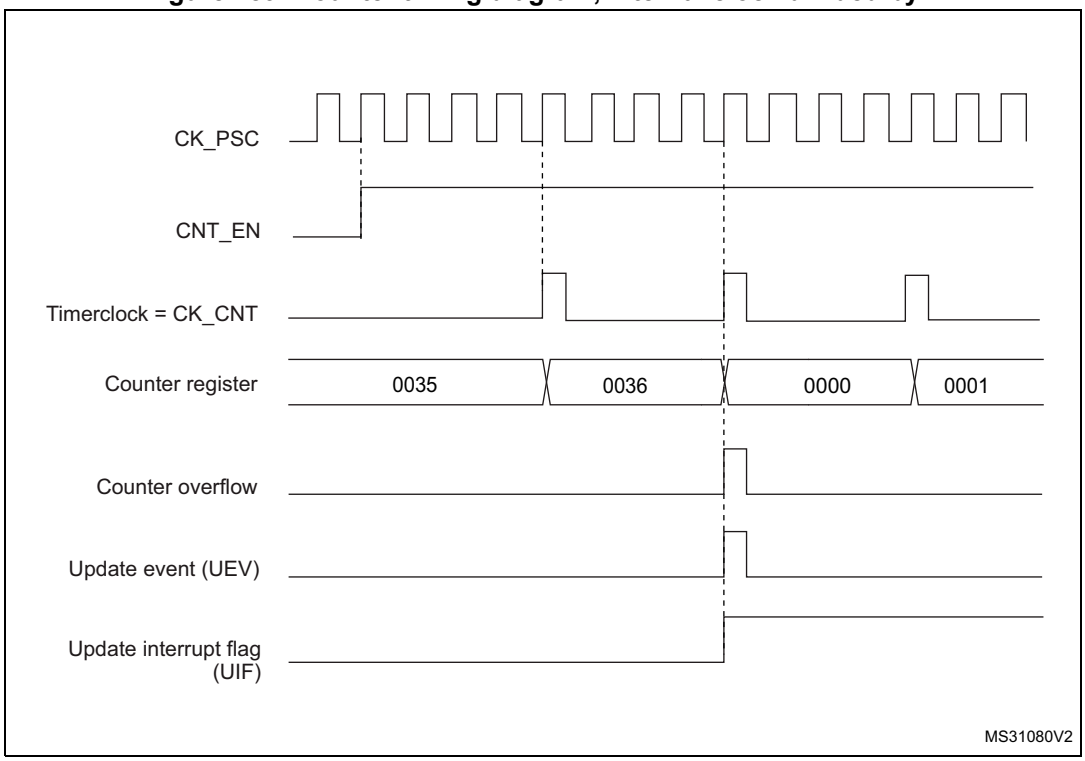

Figure 290. Counter timing diagram, internal clock divided by N

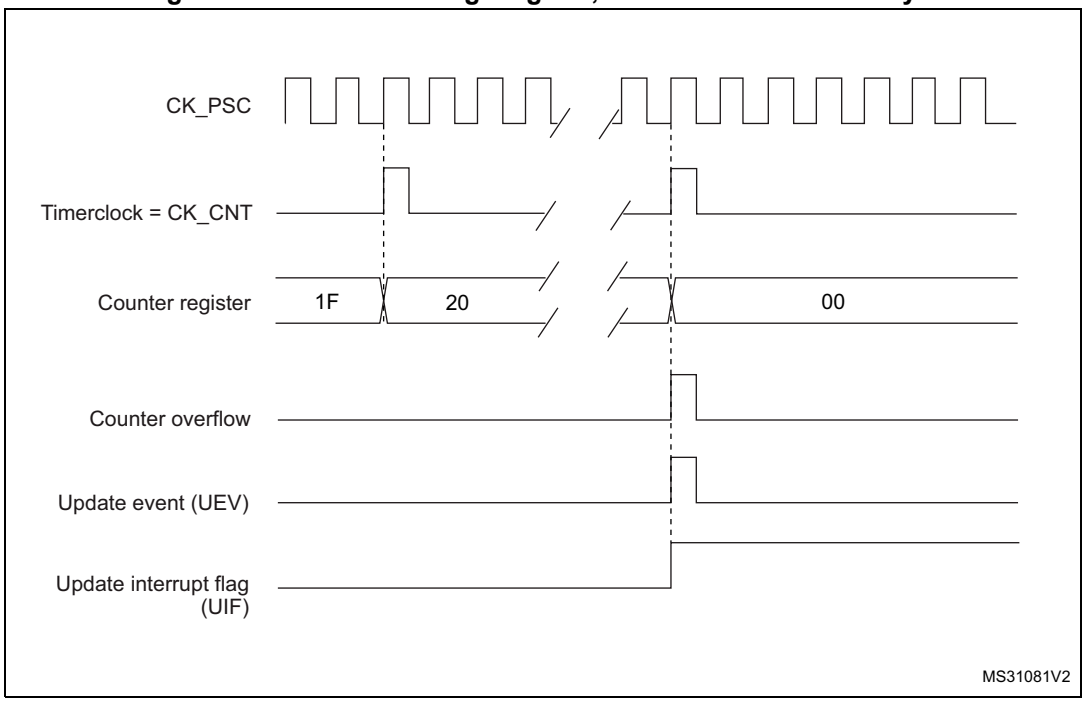

Figure 291. Counter timing diagram, Update event when ARPE=0 (TIMx_ARR not preloaded)

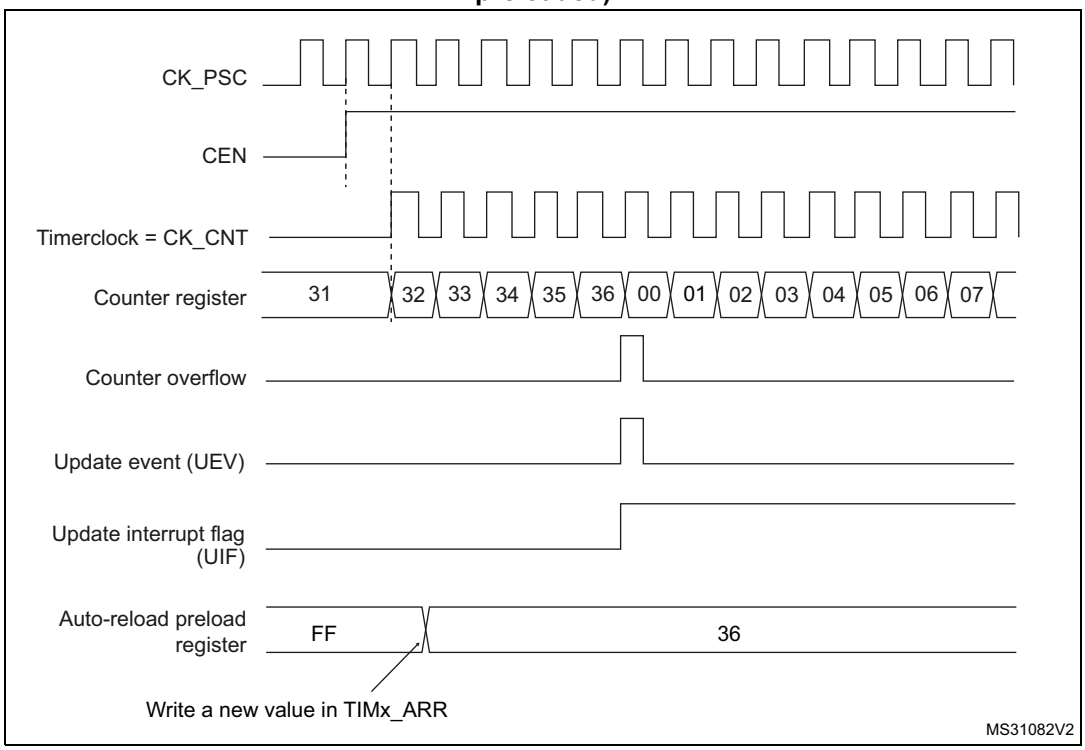

Figure 292. Counter timing diagram, Update event when ARPE=1 (TIMx_ARR preloaded)

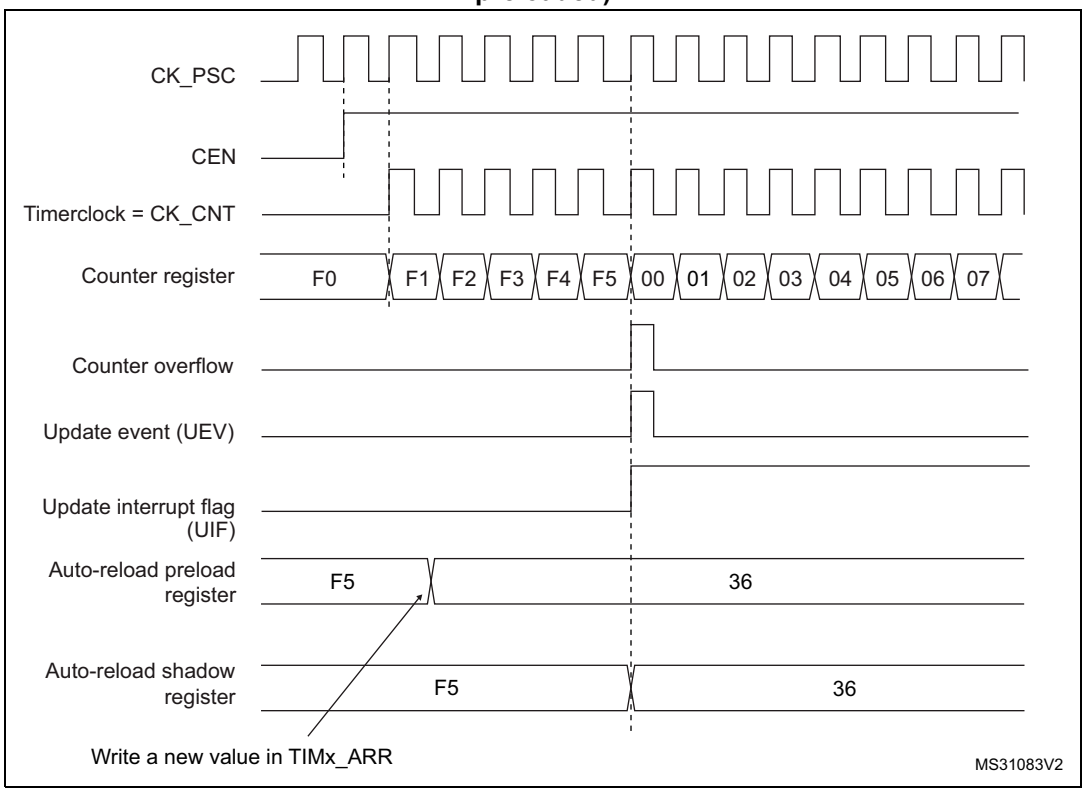

Downcounting mode

In downcounting mode, the counter counts from the auto-reload value (content of the TIMx_ARR register) down to 0, then restarts from the auto-reload value and generates a counter underflow event.

An Update event can be generate at each counter underflow or by setting the UG bit in the TIMx_EGR register (by software or by using the slave mode controller)

The UEV update event can be disabled by software by setting the UDIS bit in TIMx_CR1 register. This is to avoid updating the shadow registers while writing new values in the preload registers. Then no update event occurs until UDIS bit has been written to 0. However, the counter restarts from the current auto-reload value, whereas the counter of the prescaler restarts from 0 (but the prescale rate doesn't change).

In addition, if the URS bit (update request selection) in TIMx_CR1 register is set, setting the UG bit generates an update event UEV but without setting the UIF flag (thus no interrupt or DMA request is sent). This is to avoid generating both update and capture interrupts when clearing the counter on the capture event.

When an update event occurs, all the registers are updated and the update flag (UIF bit in TIMx_SR register) is set (depending on the URS bit):

- The buffer of the prescaler is reloaded with the preload value (content of the TIMx_PSC register).
- The auto-reload active register is updated with the preload value (content of the TIMx_ARR register). Note that the auto-reload is updated before the counter is reloaded, so that the next period is the expected one.

The following figures show some examples of the counter behavior for different clock frequencies when TIMx_ARR=0x36.

Figure 293. Counter timing diagram, internal clock divided by 1

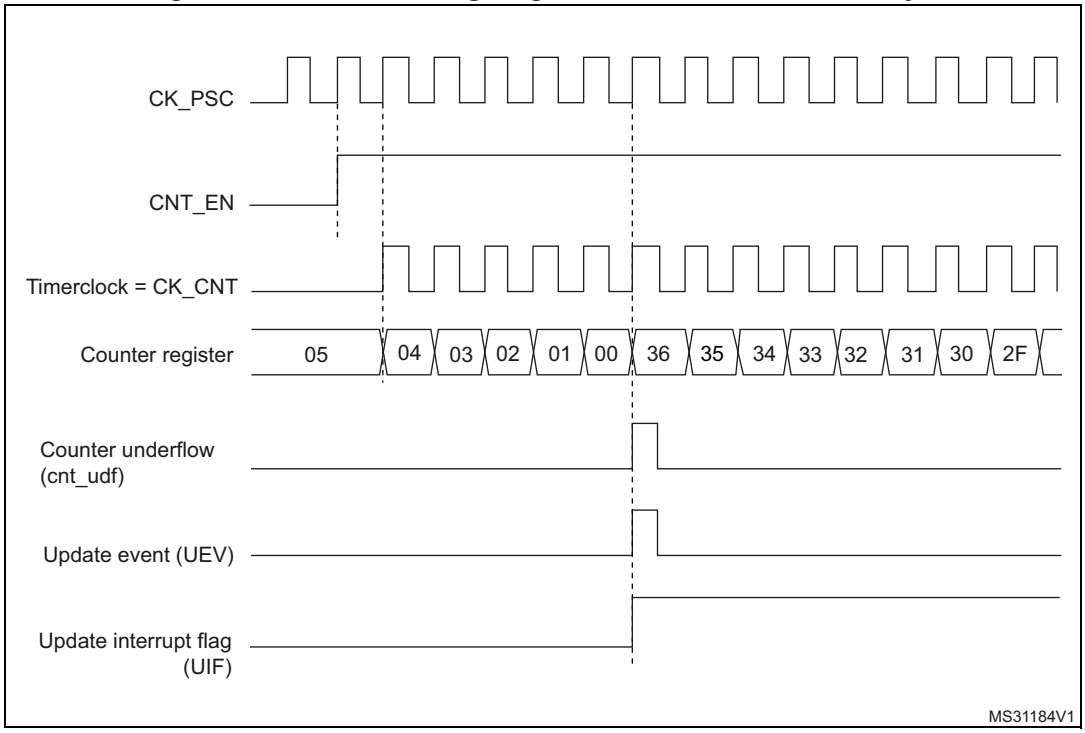

Figure 294. Counter timing diagram, internal clock divided by 2

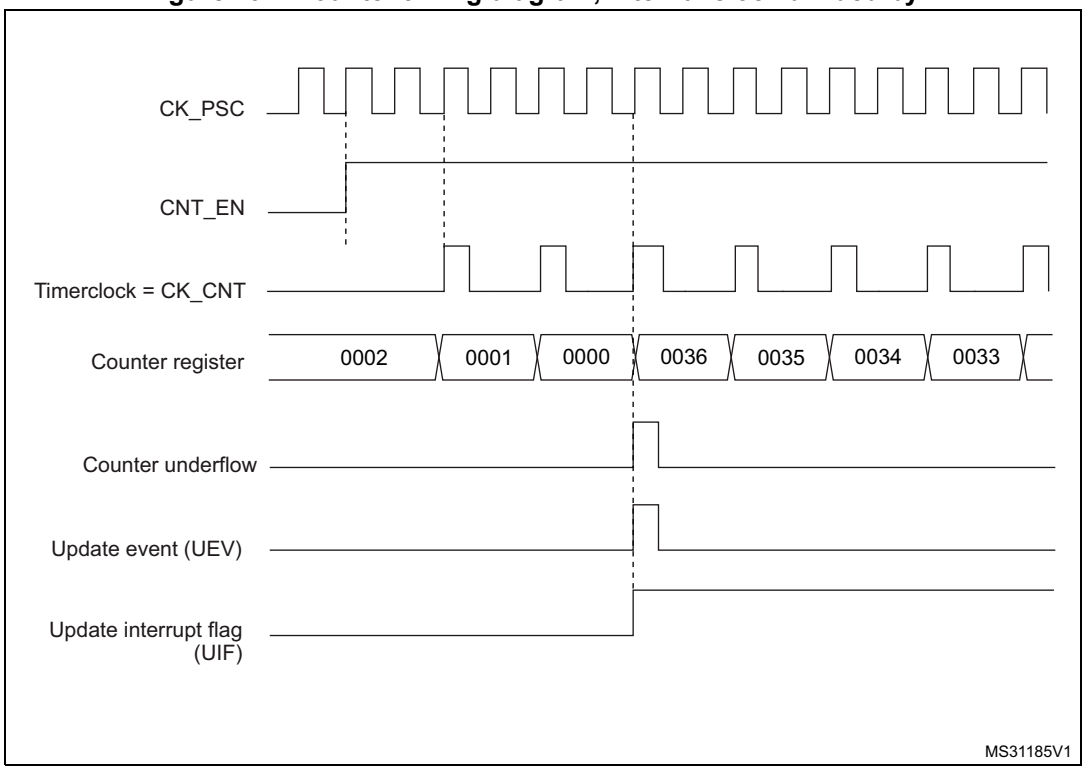

Figure 295. Counter timing diagram, internal clock divided by 4

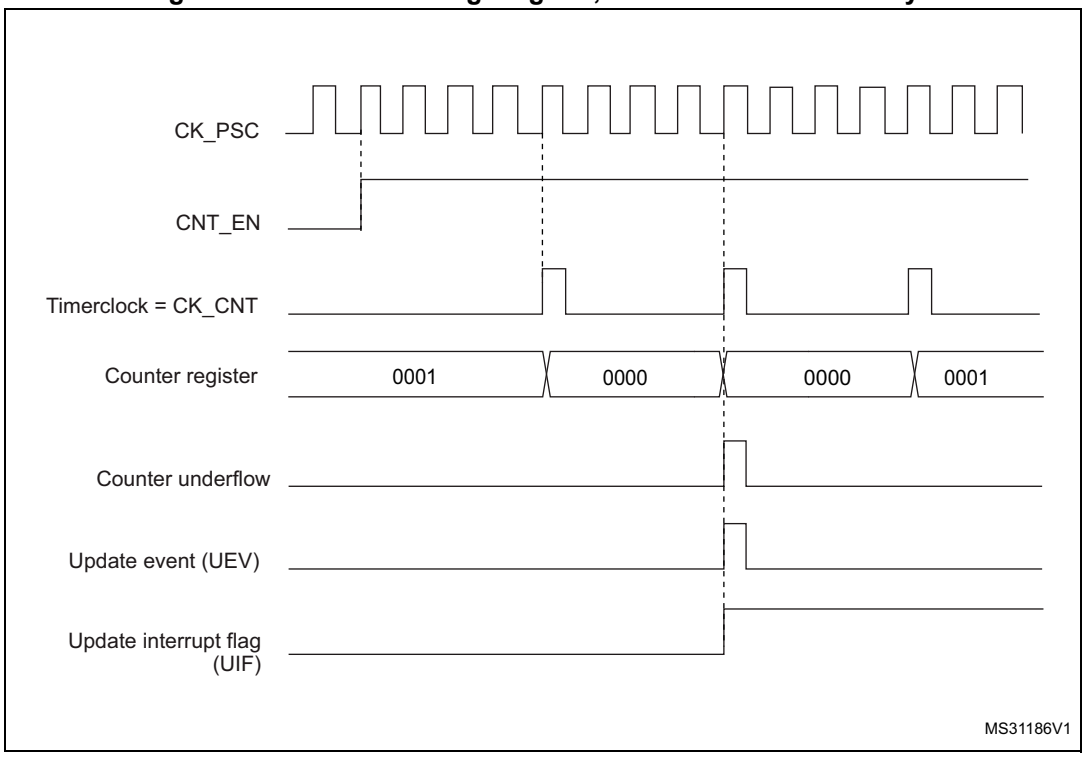

Figure 296. Counter timing diagram, internal clock divided by N

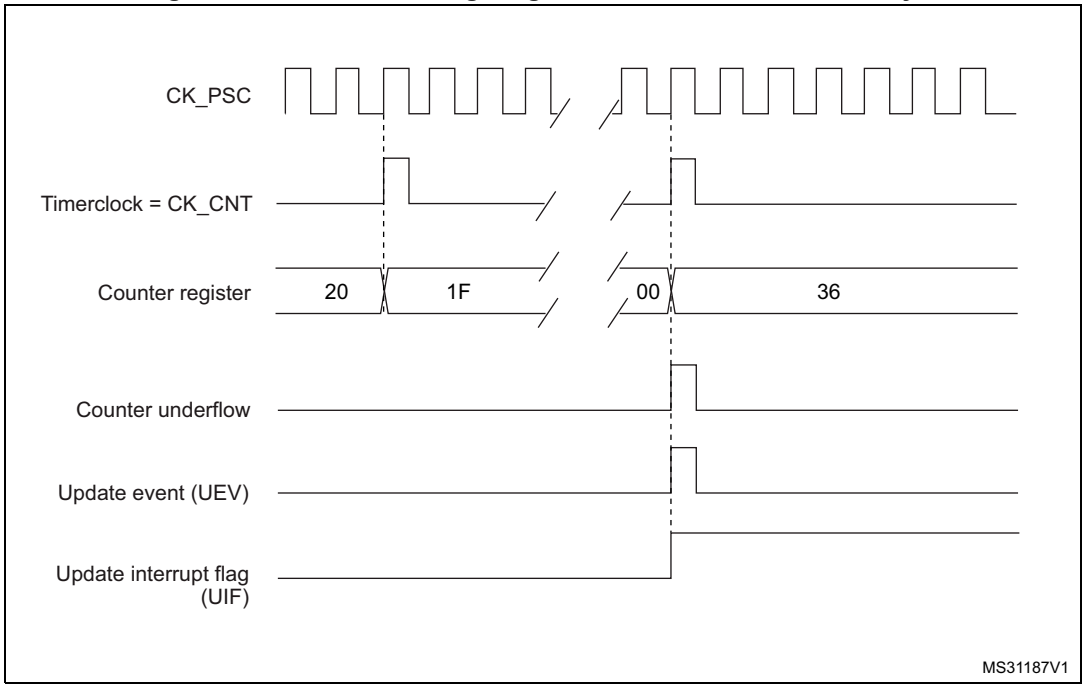

Figure 297. Counter timing diagram, Update event when repetition counter is not used

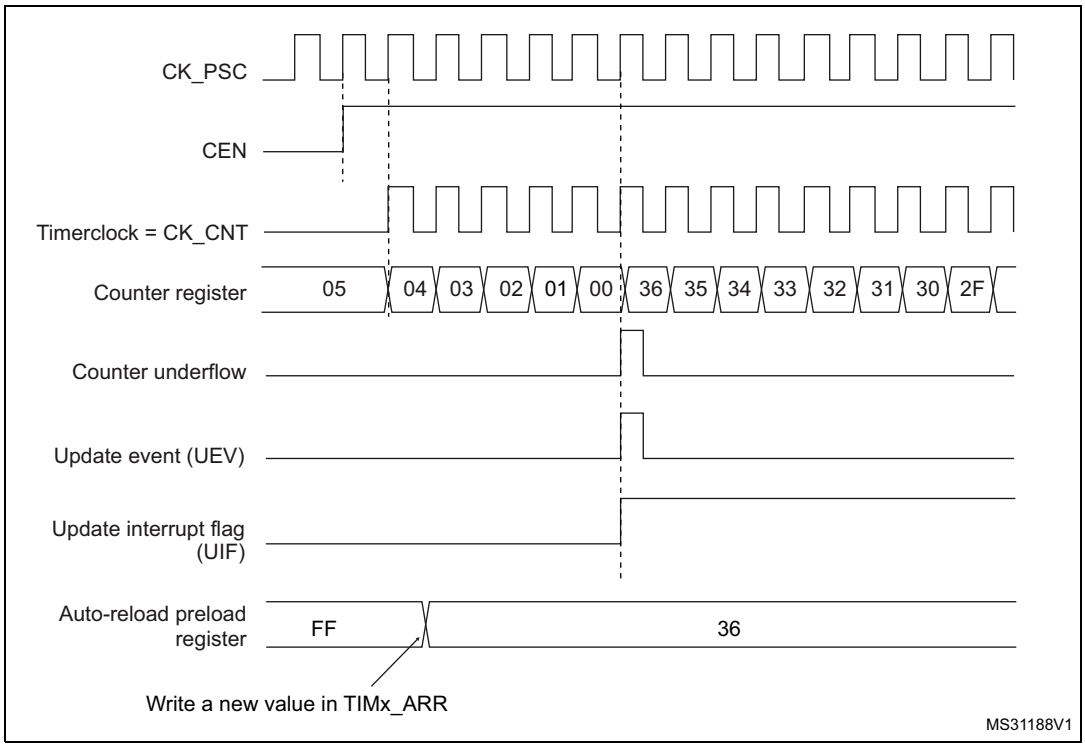

Center-aligned mode (up/down counting)

In center-aligned mode, the counter counts from 0 to the auto-reload value (content of the TIMx_ARR register) – 1, generates a counter overflow event, then counts from the auto-reload value down to 1 and generates a counter underflow event. Then it restarts counting from 0.

Center-aligned mode is active when the CMS bits in TIMx_CR1 register are not equal to '00'. The Output compare interrupt flag of channels configured in output is set when: the counter counts down (Center aligned mode 1, CMS = "01"), the counter counts up (Center aligned mode 2, CMS = "10") the counter counts up and down (Center aligned mode 3, CMS = "11").

In this mode, the direction bit (DIR from TIMx_CR1 register) cannot be written. It is updated by hardware and gives the current direction of the counter.

The update event can be generated at each counter overflow and at each counter underflow or by setting the UG bit in the TIMx_EGR register (by software or by using the slave mode controller) also generates an update event. In this case, the counter restarts counting from 0, as well as the counter of the prescaler.

The UEV update event can be disabled by software by setting the UDIS bit in TIMx_CR1 register. This is to avoid updating the shadow registers while writing new values in the preload registers. Then no update event occurs until the UDIS bit has been written to 0. However, the counter continues counting up and down, based on the current auto-reload value.

In addition, if the URS bit (update request selection) in TIMx_CR1 register is set, setting the UG bit generates an update event UEV but without setting the UIF flag (thus no interrupt or

DMA request is sent). This is to avoid generating both update and capture interrupt when clearing the counter on the capture event.

When an update event occurs, all the registers are updated and the update flag (UIF bit in TIMx_SR register) is set (depending on the URS bit):

- The buffer of the prescaler is reloaded with the preload value (content of the TIMx_PSC register).
- The auto-reload active register is updated with the preload value (content of the TIMx_ARR register). Note that if the update source is a counter overflow, the auto-reload is updated before the counter is reloaded, so that the next period is the expected one (the counter is loaded with the new value).

The following figures show some examples of the counter behavior for different clock frequencies.

Figure 298. Counter timing diagram, internal clock divided by 1, TIMx_ARR=0x6

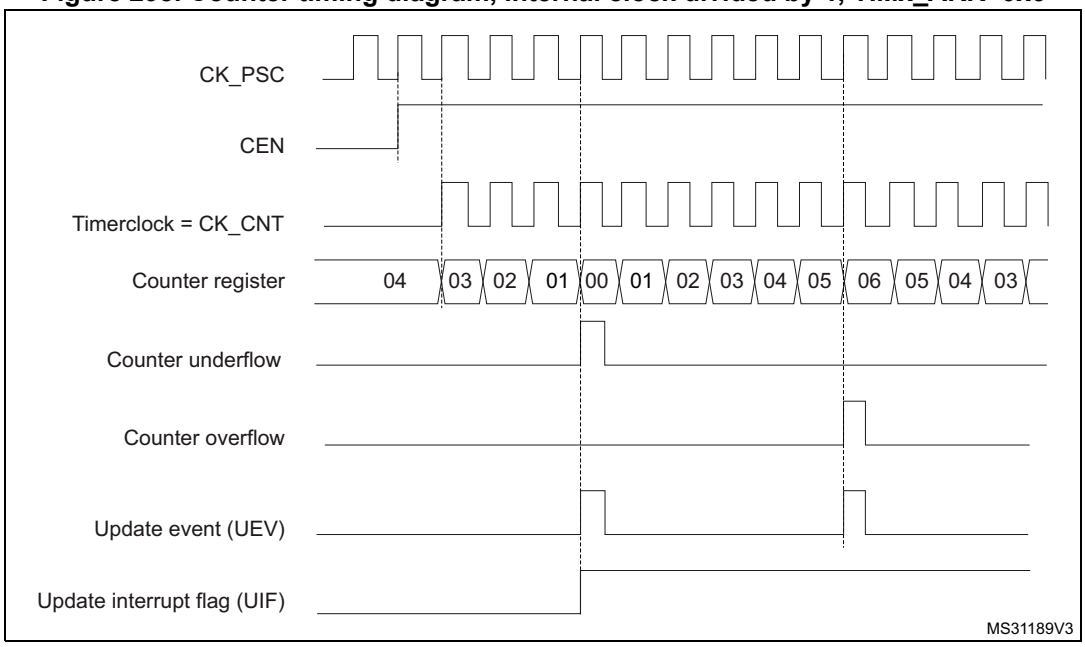

1. Here, center-aligned mode 1 is used (for more details refer to *Section 31.4.1: TIMx control register 1 (TIMx_CR1)(x = 2 to 5) on page 1059*).

Figure 299. Counter timing diagram, internal clock divided by 2

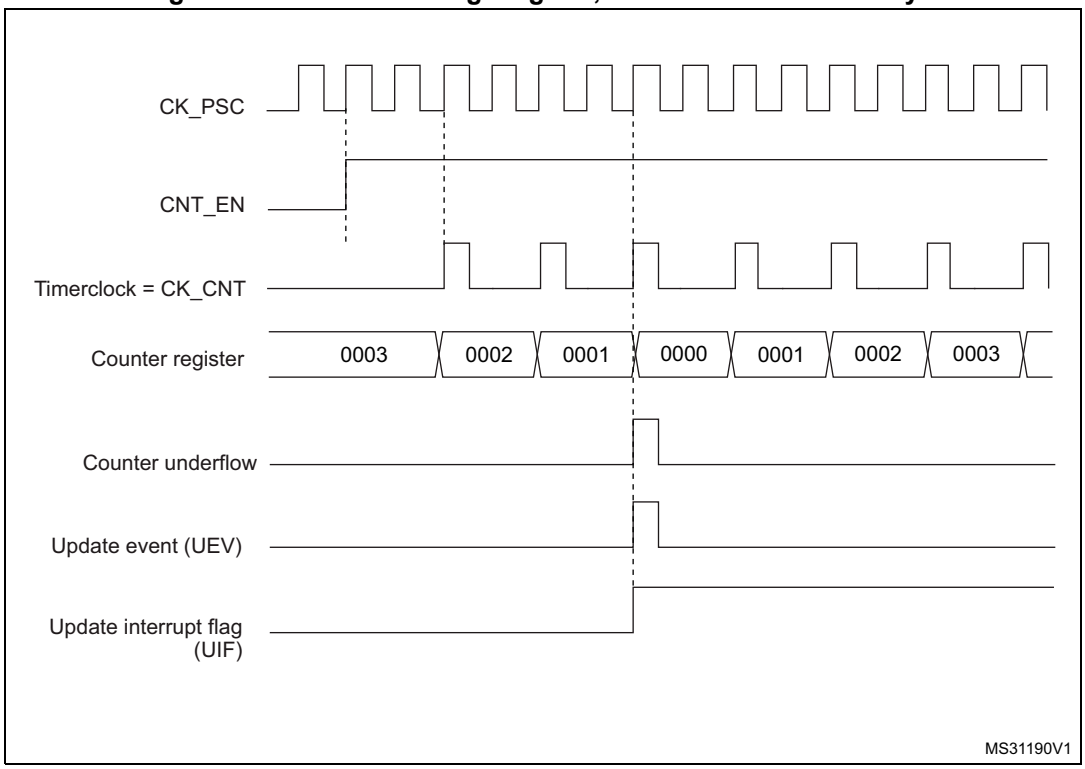

Figure 300. Counter timing diagram, internal clock divided by 4, TIMx_ARR=0x36

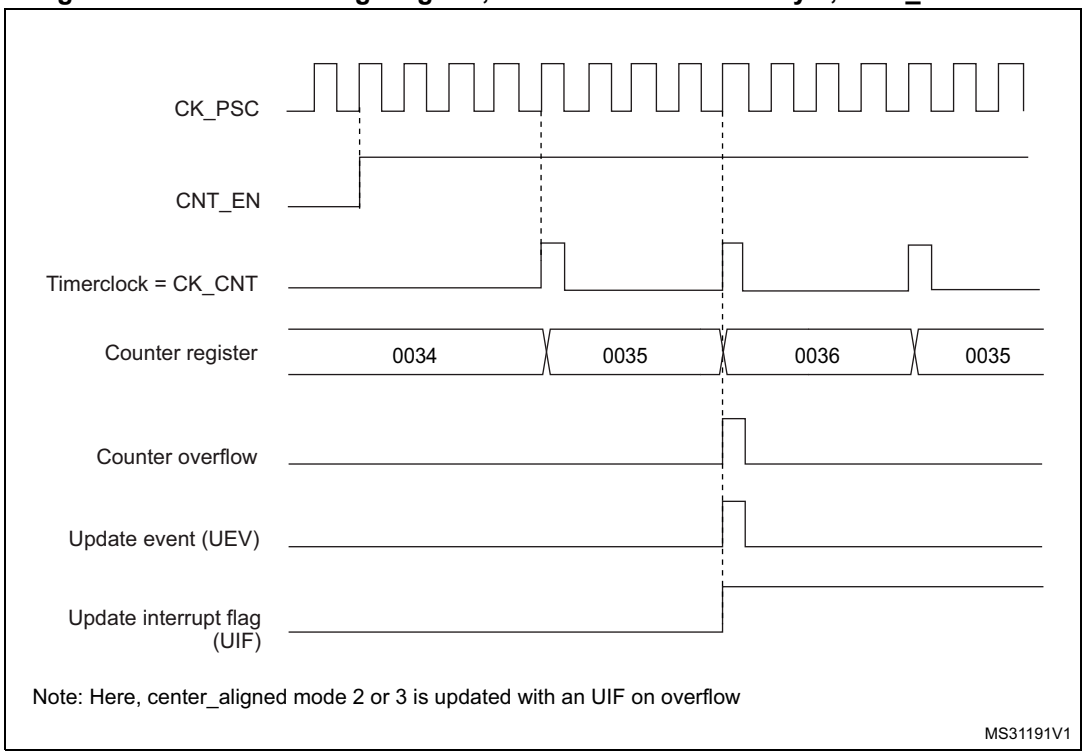

1. Center-aligned mode 2 or 3 is used with an UIF on overflow.

Figure 301. Counter timing diagram, internal clock divided by N

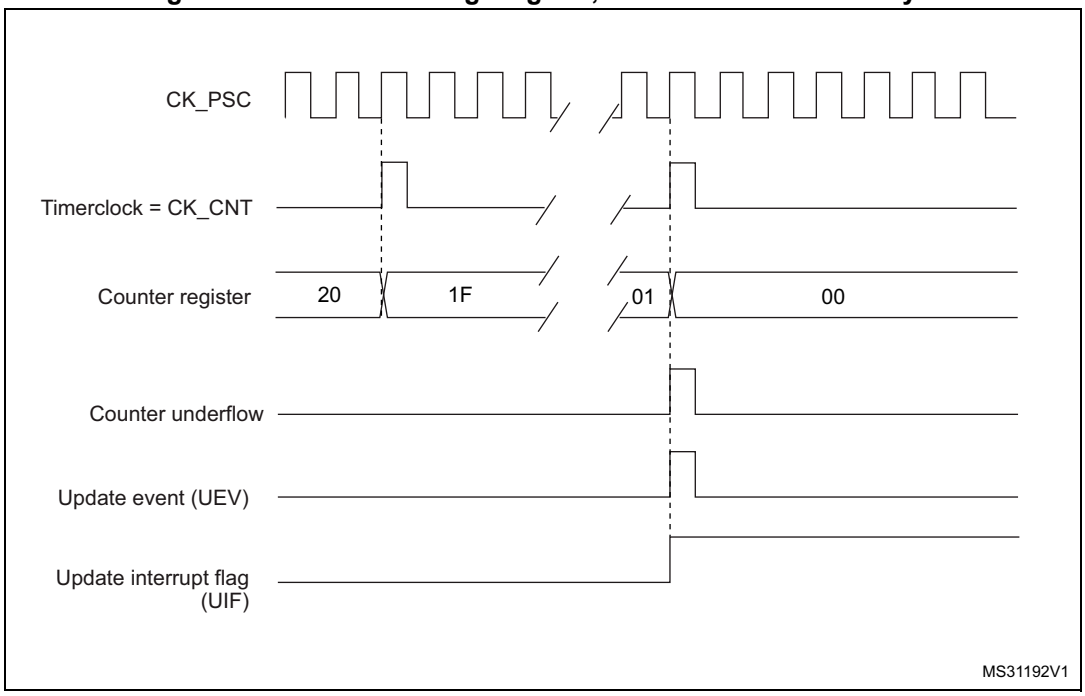

Figure 302. Counter timing diagram, Update event with ARPE=1 (counter underflow)

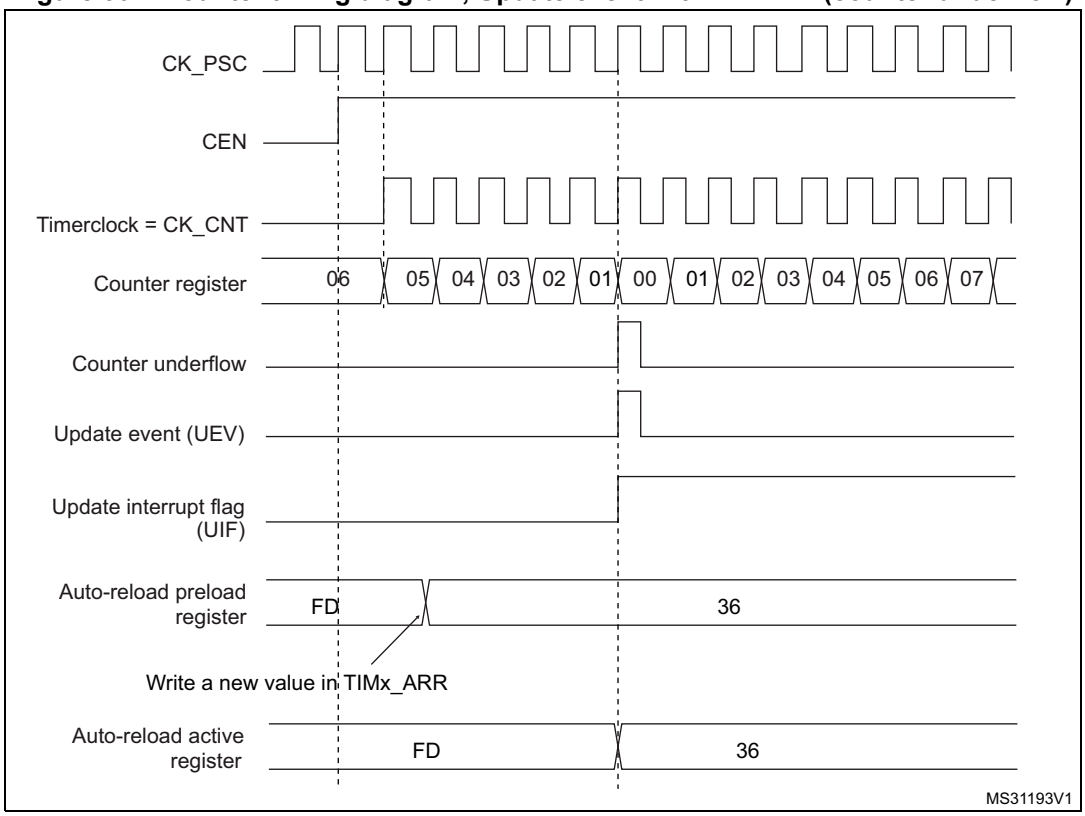

Figure 303. Counter timing diagram, Update event with ARPE=1 (counter overflow)

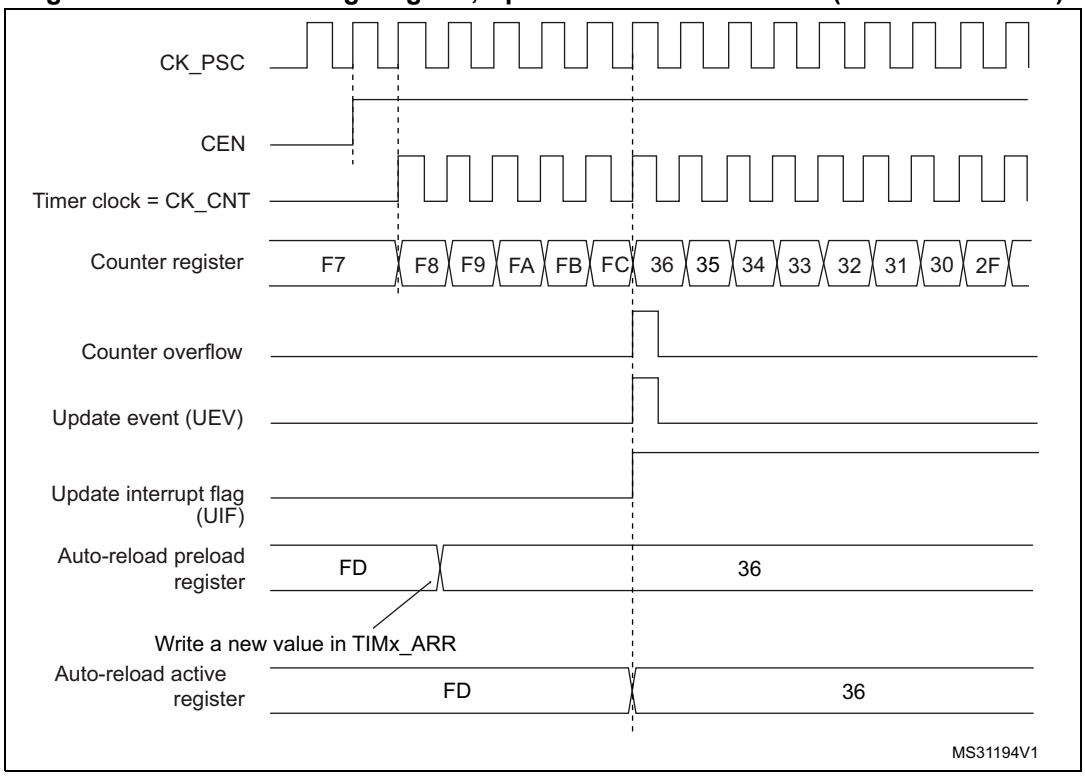

31.3.3 Clock selection

The counter clock can be provided by the following clock sources:

- Internal clock (CK_INT)
- External clock mode1: external input pin (TIx)
- External clock mode2: external trigger input (ETR)
- Internal trigger inputs (ITRx): using one timer as prescaler for another timer, for example, Timer X can be configured to act as a prescaler for Timer Y. Refer to *: Using one timer as prescaler for another timer on page 1054* for more details.

Internal clock source (CK_INT)

If the slave mode controller is disabled (SMS=000 in the TIMx_SMCR register), then the CEN, DIR (in the TIMx_CR1 register) and UG bits (in the TIMx_EGR register) are actual control bits and can be changed only by software (except UG which remains cleared automatically). As soon as the CEN bit is written to 1, the prescaler is clocked by the internal clock CK_INT.

Figure 304 shows the behavior of the control circuit and the upcounter in normal mode, without prescaler.

Figure 304. Control circuit in normal mode, internal clock divided by 1

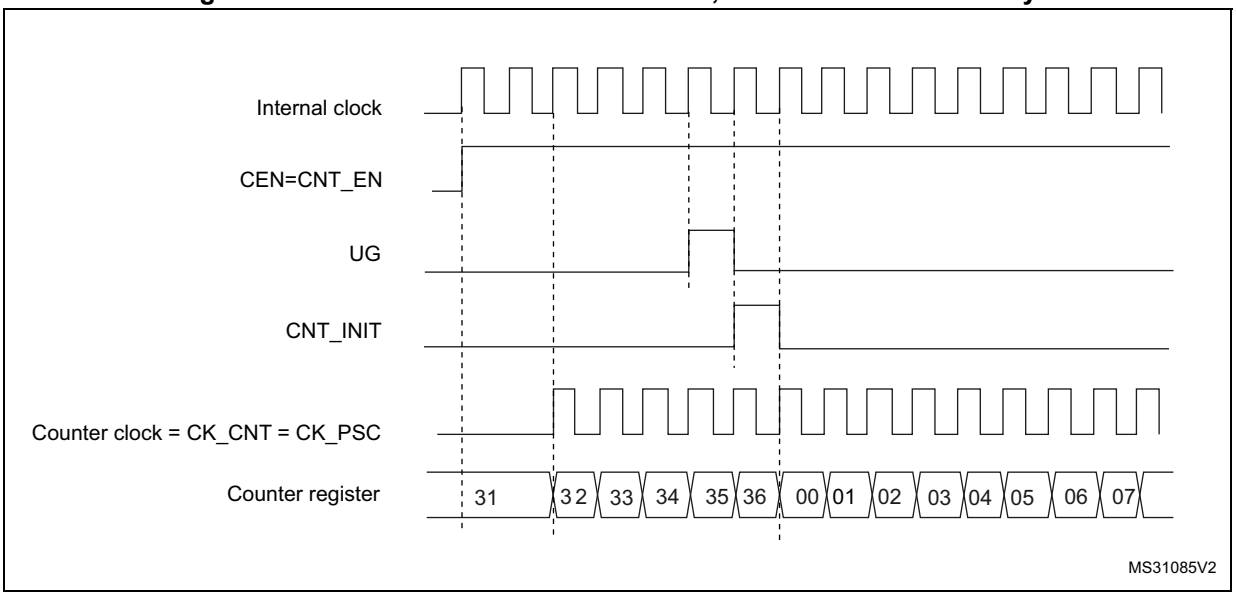

External clock source mode 1

This mode is selected when SMS=111 in the TIMx_SMCR register. The counter can count at each rising or falling edge on a selected input.

Figure 305. TI2 external clock connection example

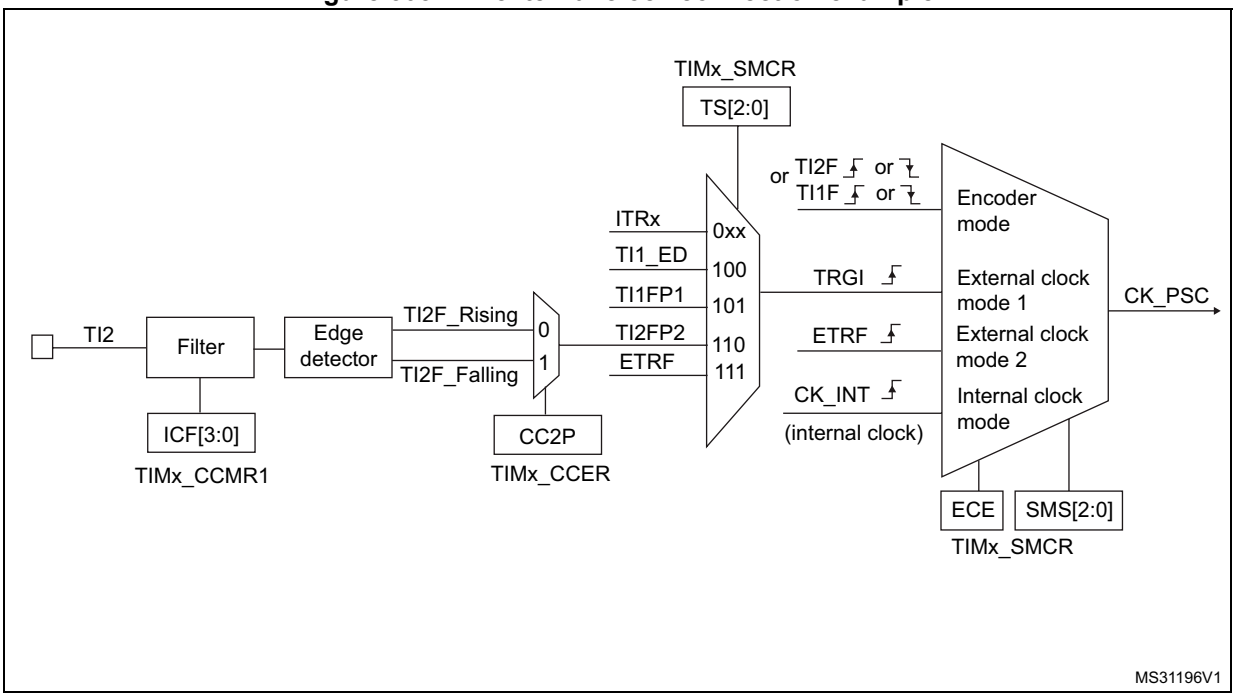

For example, to configure the upcounter to count in response to a rising edge on the TI2 input, use the following procedure:

1. Configure channel 2 to detect rising edges on the TI2 input by writing CC2S= ‘01 in the TIMx_CCMR1 register.
2. Configure the input filter duration by writing the IC2F[3:0] bits in the TIMx_CCMR1 register (if no filter is needed, keep IC2F=0000).

Note: The capture prescaler is not used for triggering, so it does not need to be configured.

3. Select rising edge polarity by writing CC2P=0 and CC2NP=0 and CC2NP=0 in the TIMx_CCER register.
4. Configure the timer in external clock mode 1 by writing SMS=111 in the TIMx_SMCR register.
5. Select TI2 as the input source by writing TS=110 in the TIMx_SMCR register.
6. Enable the counter by writing CEN=1 in the TIMx_CR1 register.

When a rising edge occurs on TI2, the counter counts once and the TIF flag is set.

The delay between the rising edge on TI2 and the actual clock of the counter is due to the resynchronization circuit on TI2 input.

Figure 306. Control circuit in external clock mode 1

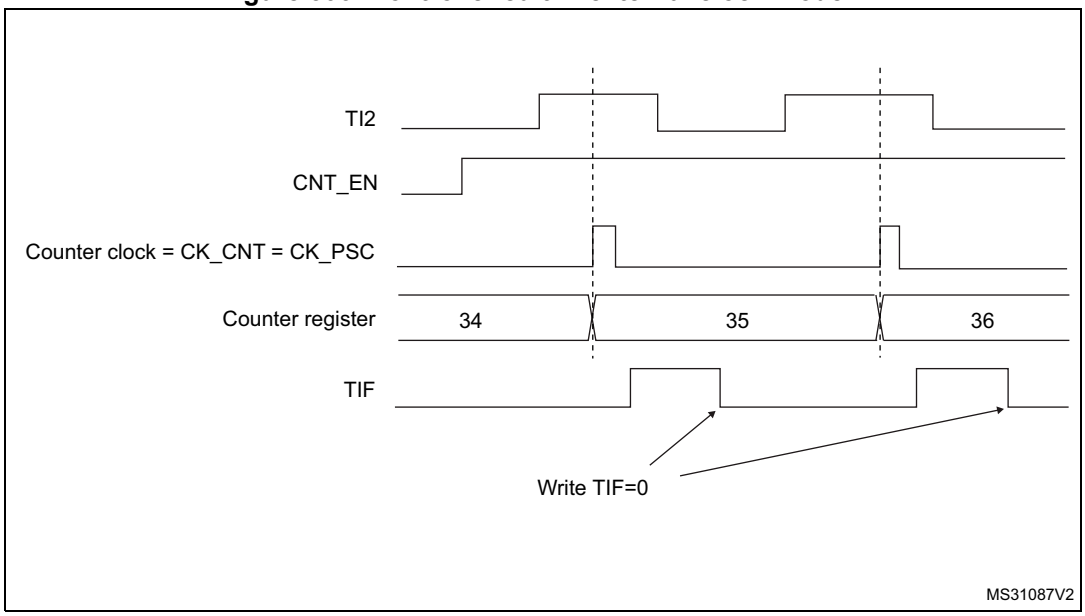

External clock source mode 2

This mode is selected by writing ECE=1 in the TIMx_SMCR register.

The counter can count at each rising or falling edge on the external trigger input ETR.

Figure 307 gives an overview of the external trigger input block.

Figure 307. External trigger input block

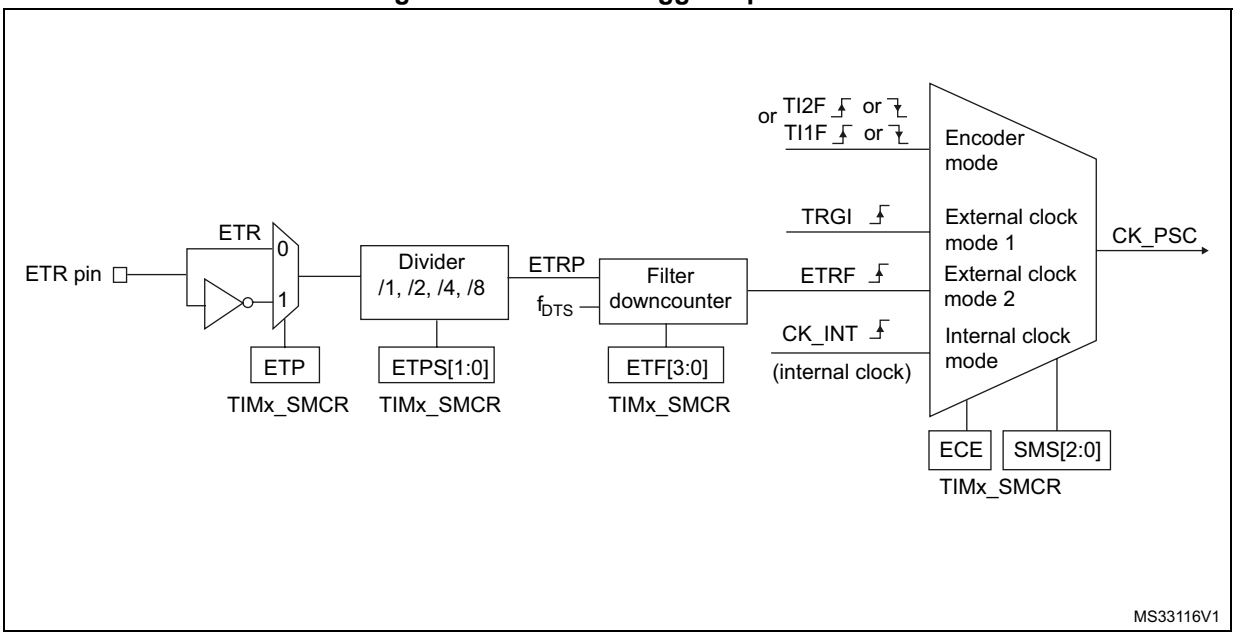

For example, to configure the upcounter to count each 2 rising edges on ETR, use the following procedure:

1. As no filter is needed in this example, write ETF[3:0]=0000 in the TIMx_SMCR register.
2. Set the prescaler by writing ETPS[1:0]=01 in the TIMx_SMCR register
3. Select rising edge detection on the ETR pin by writing ETP=0 in the TIMx_SMCR register
4. Enable external clock mode 2 by writing ECE=1 in the TIMx_SMCR register.
5. Enable the counter by writing CEN=1 in the TIMx_CR1 register.

The counter counts once each 2 ETR rising edges.

The delay between the rising edge on ETR and the actual clock of the counter is due to the resynchronization circuit on the ETRP signal. As a consequence, the maximum frequency which can be correctly captured by the counter is at most ¼ of TIMxCLK frequency. When the ETRP signal is faster, the user should apply a division of the external signal by a proper ETPS prescaler setting.

Figure 308. Control circuit in external clock mode 2

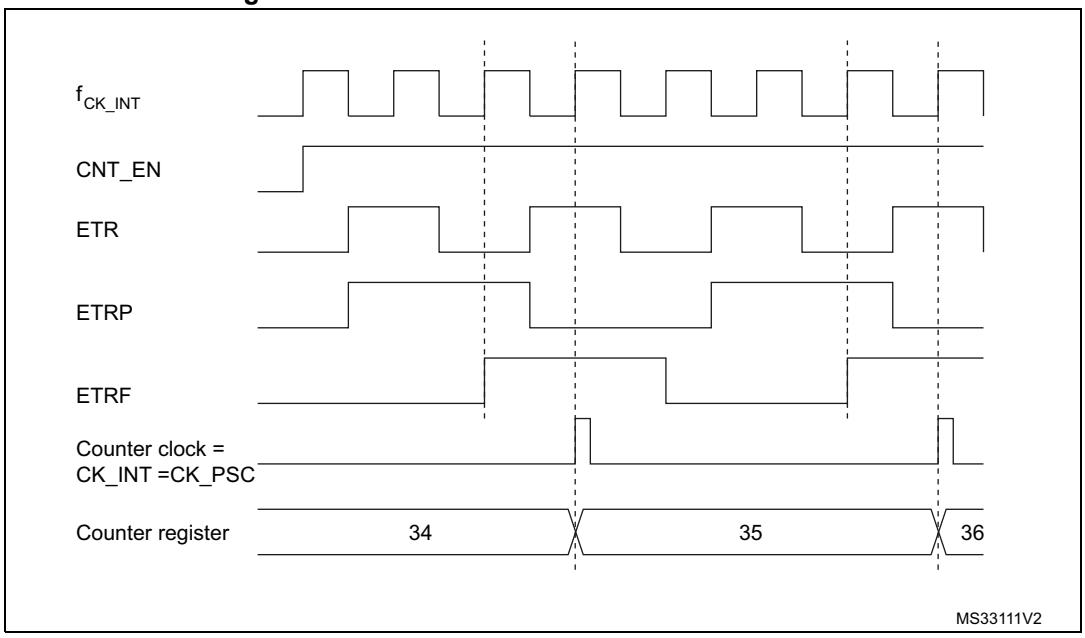

31.3.4 Capture/Compare channels

Each Capture/Compare channel is built around a capture/compare register (including a shadow register), a input stage for capture (with digital filter, multiplexing and prescaler) and an output stage (with comparator and output control).

The following figure gives an overview of one Capture/Compare channel.

The input stage samples the corresponding TIx input to generate a filtered signal TIxF. Then, an edge detector with polarity selection generates a signal (TIxFPx) which can be used as trigger input by the slave mode controller or as the capture command. It is prescaled before the capture register (ICxPS).

Figure 309. Capture/Compare channel (example: channel 1 input stage)

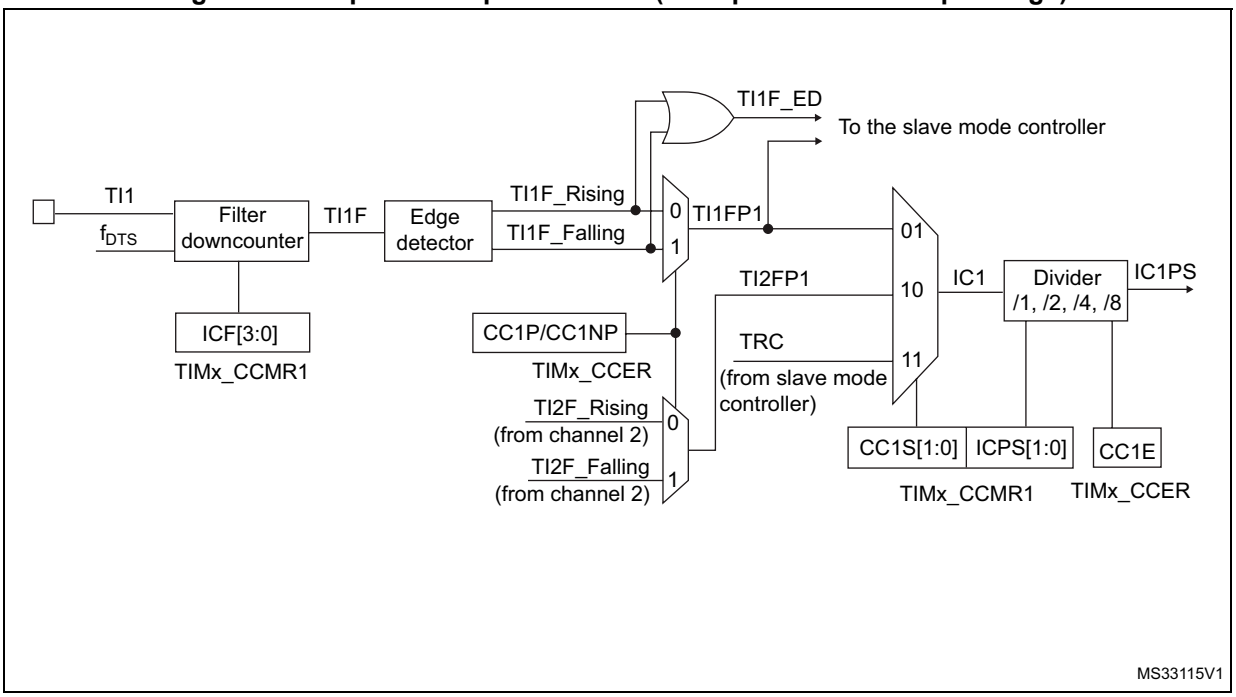

The output stage generates an intermediate waveform which is then used for reference: OCxRef (active high). The polarity acts at the end of the chain.

Figure 310. Capture/Compare channel 1 main circuit

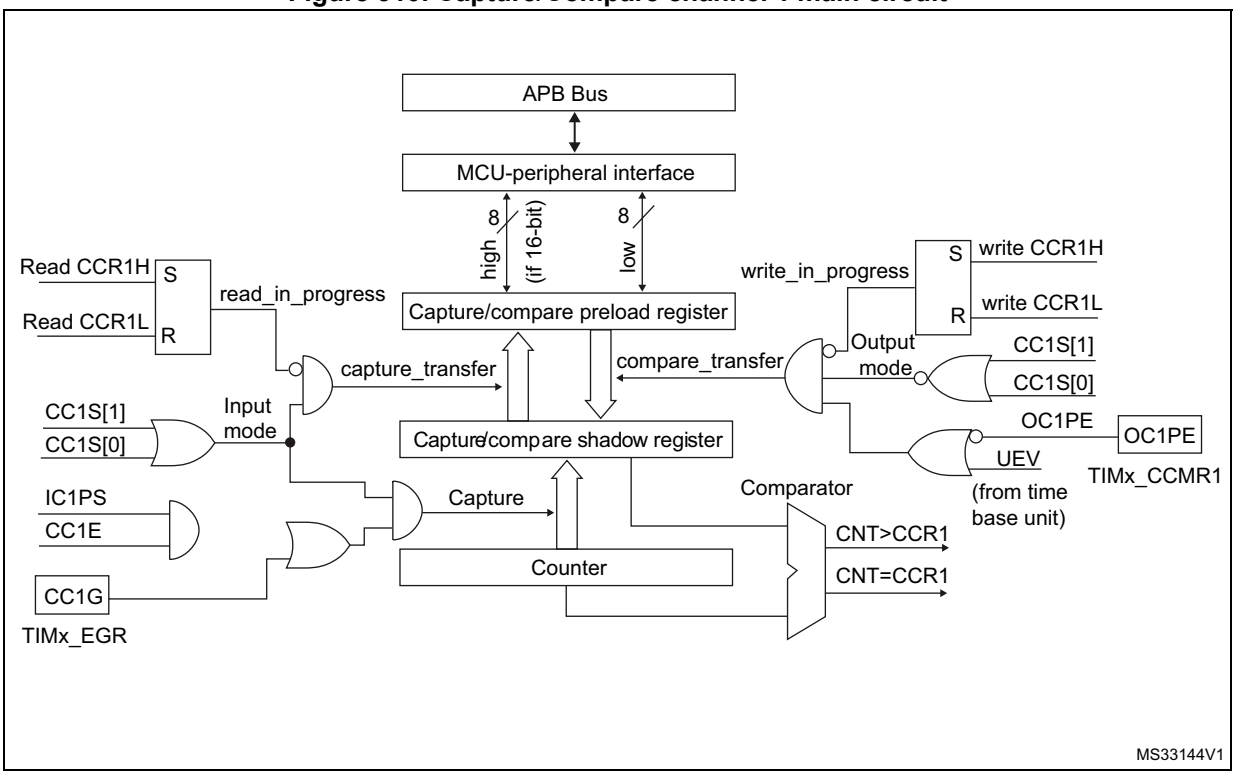

Figure 311. Output stage of Capture/Compare channel (channel 1)

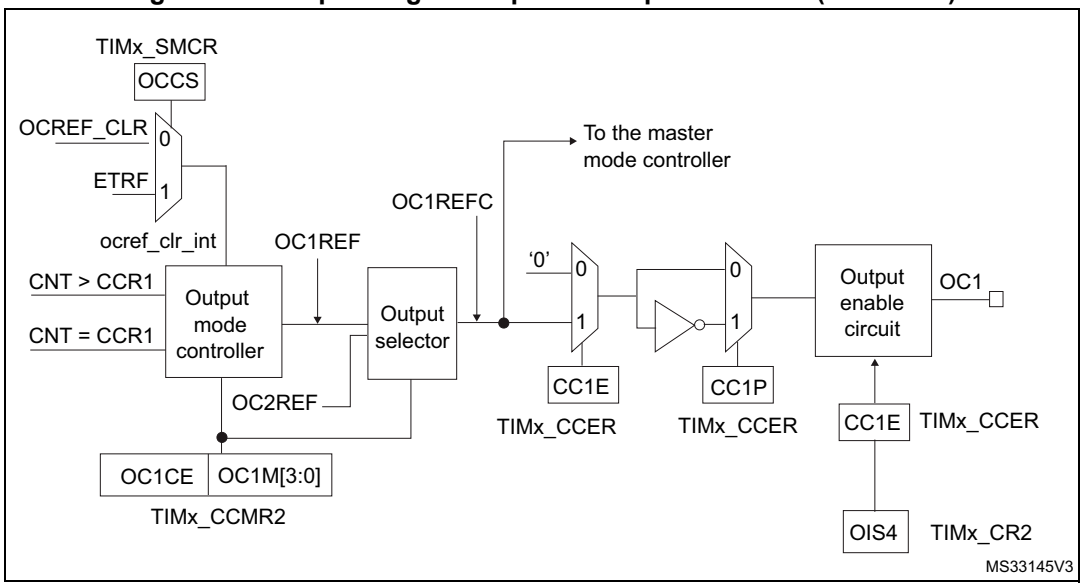

The capture/compare block is made of one preload register and one shadow register. Write and read always access the preload register.

In capture mode, captures are actually done in the shadow register, which is copied into the preload register.

In compare mode, the content of the preload register is copied into the shadow register which is compared to the counter.

31.3.5 Input capture mode

In Input capture mode, the Capture/Compare Registers (TIMx_CCRx) are used to latch the value of the counter after a transition detected by the corresponding ICx signal. When a capture occurs, the corresponding CCXIF flag (TIMx_SR register) is set and an interrupt or a DMA request can be sent if they are enabled. If a capture occurs while the CCxIF flag was already high, then the over-capture flag CCxOF (TIMx_SR register) is set. CCxIF can be cleared by software by writing it to 0 or by reading the captured data stored in the TIMx_CCRx register. CCxOF is cleared when it is written with 0.

The following example shows how to capture the counter value in TIMx_CCR1 when TI1 input rises. To do this, use the following procedure:

1. Select the active input: TIMx_CCR1 must be linked to the TI1 input, so write the CC1S bits to 01 in the TIMx_CCMR1 register. As soon as CC1S becomes different from 00, the channel is configured in input and the TIMx_CCR1 register becomes read-only.
2. Program the appropriate input filter duration in relation with the signal connected to the timer (when the input is one of the TIx (ICxF bits in the TIMx_CCMRx register). Let's imagine that, when toggling, the input signal is not stable during at must 5 internal clock cycles. We must program a filter duration longer than these 5 clock cycles. We can validate a transition on TI1 when 8 consecutive samples with the new level have been

detected (sampled at f_{DTS} frequency). Then write IC1F bits to 0011 in the TIMx_CCMR1 register.

3. Select the edge of the active transition on the TI1 channel by writing the CC1P and CC1NP and CC1NP bits to 000 in the TIMx_CCER register (rising edge in this case).
4. Program the input prescaler. In our example, we wish the capture to be performed at each valid transition, so the prescaler is disabled (write IC1PS bits to 00 in the TIMx_CCMR1 register).
5. Enable capture from the counter into the capture register by setting the CC1E bit in the TIMx_CCER register.
6. If needed, enable the related interrupt request by setting the CC1IE bit in the TIMx_DIER register, and/or the DMA request by setting the CC1DE bit in the TIMx_DIER register.

When an input capture occurs:

- The TIMx_CCR1 register gets the value of the counter on the active transition.
- CC1IF flag is set (interrupt flag). CC1OF is also set if at least two consecutive captures occurred whereas the flag was not cleared.
- An interrupt is generated depending on the CC1IE bit.
- A DMA request is generated depending on the CC1DE bit.

In order to handle the overcapture, it is recommended to read the data before the overcapture flag. This is to avoid missing an overcapture which could happen after reading the flag and before reading the data.

Note: IC interrupt and/or DMA requests can be generated by software by setting the corresponding CCxG bit in the TIMx_EGR register.

31.3.6 PWM input mode

This mode is a particular case of input capture mode. The procedure is the same except:

- Two ICx signals are mapped on the same TIx input.
- These 2 ICx signals are active on edges with opposite polarity.
- One of the two TIxFP signals is selected as trigger input and the slave mode controller is configured in reset mode.

For example, one can measure the period (in TIMx_CCR1 register) and the duty cycle (in TIMx_CCR2 register) of the PWM applied on TI1 using the following procedure (depending on CK_INT frequency and prescaler value):

1. Select the active input for TIMx_CCR1: write the CC1S bits to 01 in the TIMx_CCMR1 register (TI1 selected).
2. Select the active polarity for TI1FP1 (used both for capture in TIMx_CCR1 and counter clear): write the CC1P to '0' and the CC1NP bit to '0' (active on rising edge).
3. Select the active input for TIMx_CCR2: write the CC2S bits to 10 in the TIMx_CCMR1 register (TI1 selected).
4. Select the active polarity for TI1FP2 (used for capture in TIMx_CCR2): write the CC2P bit to '1' and the CC2NP bit to '0' (active on falling edge).
5. Select the valid trigger input: write the TS bits to 101 in the TIMx_SMCR register (TI1FP1 selected).
6. Configure the slave mode controller in reset mode: write the SMS bits to 100 in the TIMx_SMCR register.
7. Enable the captures: write the CC1E and CC2E bits to '1 in the TIMx_CCER register.

Figure 312. PWM input mode timing

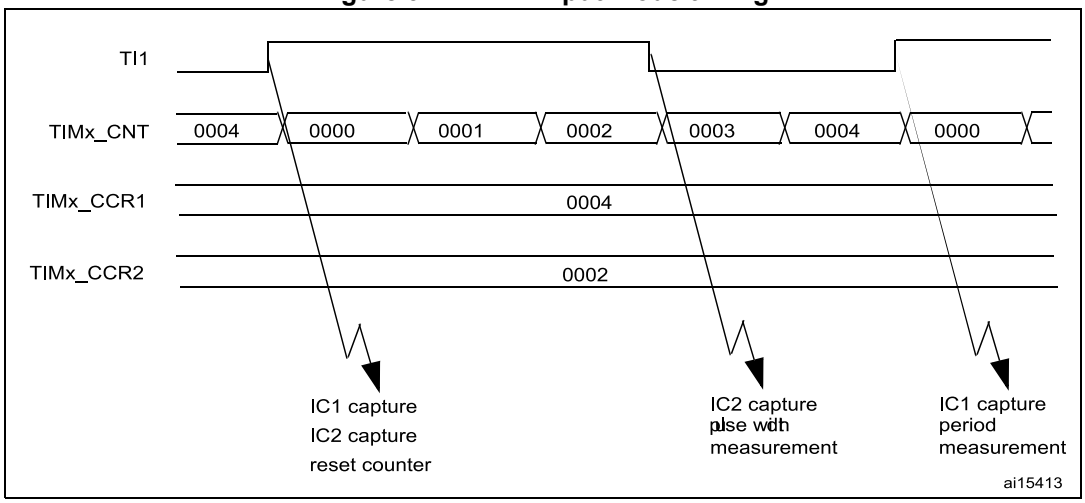

1. The PWM input mode can be used only with the TIMx_CH1/TIMx_CH2 signals due to the fact that only TI1FP1 and TI2FP2 are connected to the slave mode controller.

31.3.7 Forced output mode

In output mode (CCxS bits = 00 in the TIMx_CCMRx register), each output compare signal (OCxREF and then OCx) can be forced to active or inactive level directly by software, independently of any comparison between the output compare register and the counter.

To force an output compare signal (ocxref/OCx) to its active level, one just needs to write 101 in the OCxM bits in the corresponding TIMx_CCMRx register. Thus ocxref is forced high (OCxREF is always active high) and OCx get opposite value to CCxP polarity bit.

e.g.: CCxP=0 (OCx active high) => OCx is forced to high level.

ocxref signal can be forced low by writing the OCxM bits to 100 in the TIMx_CCMRx register.

Anyway, the comparison between the TIMx_CCRx shadow register and the counter is still performed and allows the flag to be set. Interrupt and DMA requests can be sent accordingly. This is described in the Output Compare Mode section.

31.3.8 Output compare mode

This function is used to control an output waveform or indicating when a period of time has elapsed.

When a match is found between the capture/compare register and the counter, the output compare function:

- Assigns the corresponding output pin to a programmable value defined by the output compare mode (OCxM bits in the TIMx_CCMRx register) and the output polarity (CCxP bit in the TIMx_CCER register). The output pin can keep its level (OCXM=000), be set active (OCxM=001), be set inactive (OCxM=010) or can toggle (OCxM=011) on match.
- Sets a flag in the interrupt status register (CCxIF bit in the TIMx_SR register).
- Generates an interrupt if the corresponding interrupt mask is set (CCXIE bit in the TIMx_DIER register).
- Sends a DMA request if the corresponding enable bit is set (CCxDE bit in the TIMx_DIER register, CCDS bit in the TIMx_CR2 register for the DMA request selection).

The TIMx_CCRx registers can be programmed with or without preload registers using the OCxPE bit in the TIMx_CCMRx register.

In output compare mode, the update event UEV has no effect on ocxref and OCx output. The timing resolution is one count of the counter. Output compare mode can also be used to output a single pulse (in One-pulse mode).

Procedure

1. Select the counter clock (internal, external, prescaler).
2. Write the desired data in the TIMx_ARR and TIMx_CCRx registers.
3. Set the CCxIE and/or CCxDE bits if an interrupt and/or a DMA request is to be generated.
4. Select the output mode. For example, one must write OCxM=011, OCxPE=0, CCxP=0 and CCxE=1 to toggle OCx output pin when CNT matches CCRx, CCRx preload is not used, OCx is enabled and active high.
5. Enable the counter by setting the CEN bit in the TIMx_CR1 register.

The TIMx_CCRx register can be updated at any time by software to control the output waveform, provided that the preload register is not enabled (OCxPE=0, else TIMx_CCRx shadow register is updated only at the next update event UEV). An example is given in *Figure 313*.

Figure 313. Output compare mode, toggle on OC1

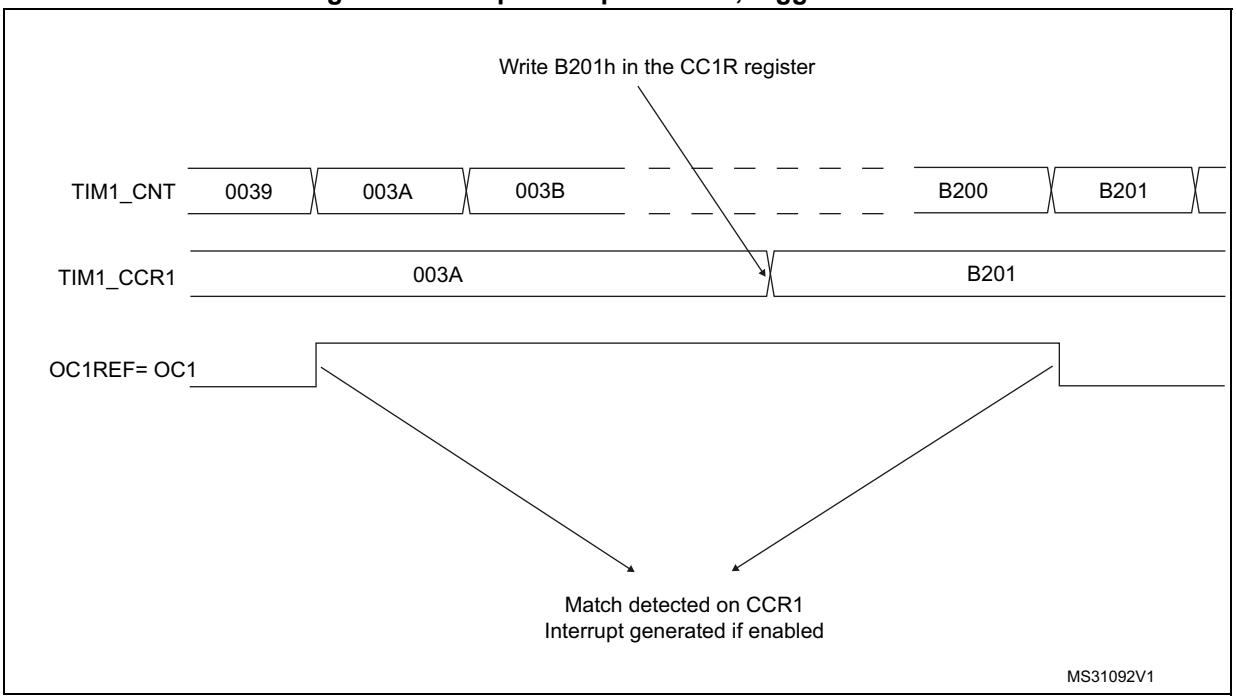

31.3.9 PWM mode

Pulse width modulation mode allows to generate a signal with a frequency determined by the value of the TIMx_ARR register and a duty cycle determined by the value of the TIMx_CCRx register.

The PWM mode can be selected independently on each channel (one PWM per OCx output) by writing 110 (PWM mode 1) or ‘111 (PWM mode 2) in the OCxM bits in the TIMx_CCMRx register. The corresponding preload register must be enabled by setting the OCxPE bit in the TIMx_CCMRx register, and eventually the auto-reload preload register (in upcounting or center-aligned modes) by setting the ARPE bit in the TIMx_CR1 register.

As the preload registers are transferred to the shadow registers only when an update event occurs, before starting the counter, all registers must be initialized by setting the UG bit in the TIMx_EGR register.

OCx polarity is software programmable using the CCxP bit in the TIMx_CCER register. It can be programmed as active high or active low. OCx output is enabled by the CCxE bit in the TIMx_CCER register. Refer to the TIMx_CCERx register description for more details.

In PWM mode (1 or 2), TIMx_CNT and TIMx_CCRx are always compared to determine whether TIMx_CCRx ≤ TIMx_CNT or TIMx_CNT ≤ TIMx_CCRx (depending on the direction of the counter). However, to comply with the OCREF_CLR functionality (OCREF can be cleared by an external event through the ETR signal until the next PWM period), the OCREF signal is asserted only:

- When the result of the comparison or
- When the output compare mode (OCxM bits in TIMx_CCMRx register) switches from the “frozen” configuration (no comparison, OCxM=‘000) to one of the PWM modes (OCxM=‘110 or ‘111).

This forces the PWM by software while the timer is running.

The timer is able to generate PWM in edge-aligned mode or center-aligned mode depending on the CMS bits in the TIMx_CR1 register.

PWM edge-aligned mode

Upcounting configuration

Upcounting is active when the DIR bit in the TIMx_CR1 register is low. Refer to *Upcounting mode on page 1018*.

In the following example, we consider PWM mode 1. The reference PWM signal OCxREF is high as long as TIMx_CNT <TIMx_CCRx else it becomes low. If the compare value in TIMx_CCRx is greater than the auto-reload value (in TIMx_ARR) then OCxREF is held at ‘1. If the compare value is 0 then OCxREF is held at ‘0. *Figure 314* shows some edge-aligned PWM waveforms in an example where TIMx_ARR=8.

Figure 314. Edge-aligned PWM waveforms (ARR=8)

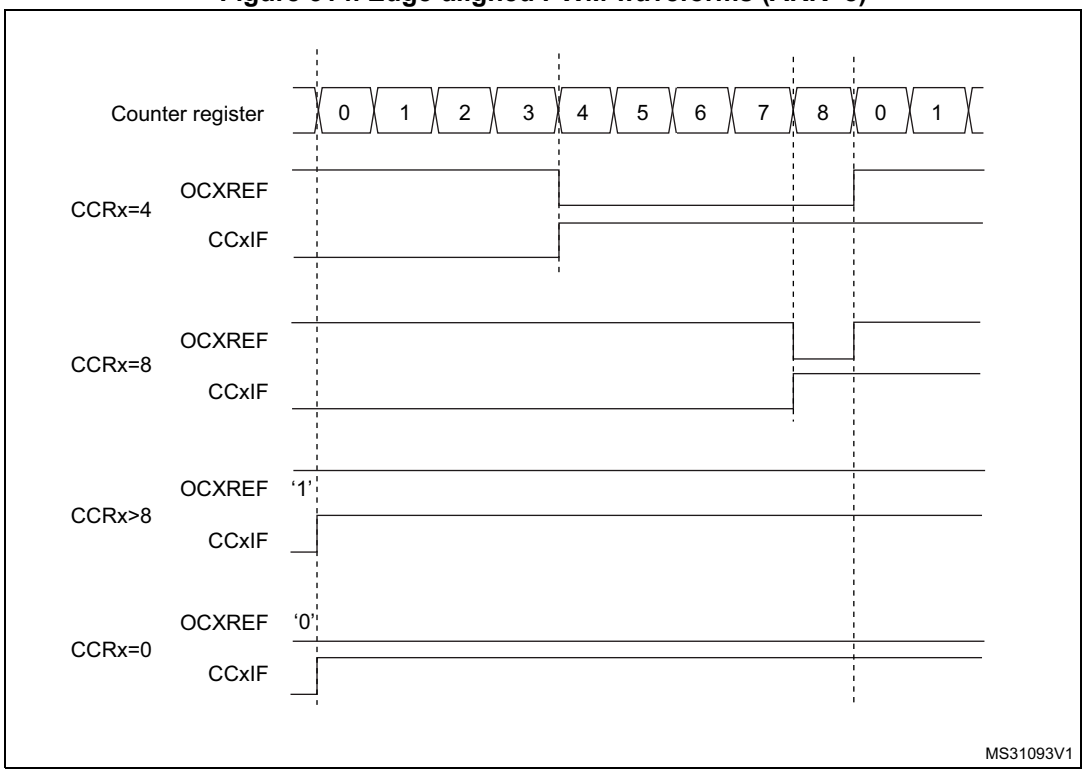

Downcounting configuration

Downcounting is active when DIR bit in TIMx_CR1 register is high. Refer to *Downcounting mode on page 1021*.

In PWM mode 1, the reference signal ocxref is low as long as TIMx_CNT>TIMx_CCRx else it becomes high. If the compare value in TIMx_CCRx is greater than the auto-reload value in TIMx_ARR, then ocxref is held at 100%. PWM is not possible in this mode.

PWM center-aligned mode

Center-aligned mode is active when the CMS bits in TIMx_CR1 register are different from ‘00 (all the remaining configurations having the same effect on the ocxref/OCx signals). The

compare flag is set when the counter counts up, when it counts down or both when it counts up and down depending on the CMS bits configuration. The direction bit (DIR) in the TIMx_CR1 register is updated by hardware and must not be changed by software. Refer to *Center-aligned mode (up/down counting) on page 1024*.

Figure 315 shows some center-aligned PWM waveforms in an example where:

- TIMx_ARR=8,
- PWM mode is the PWM mode 1,
- The flag is set when the counter counts down corresponding to the center-aligned mode 1 selected for CMS=01 in TIMx_CR1 register.

Figure 315. Center-aligned PWM waveforms (ARR=8)

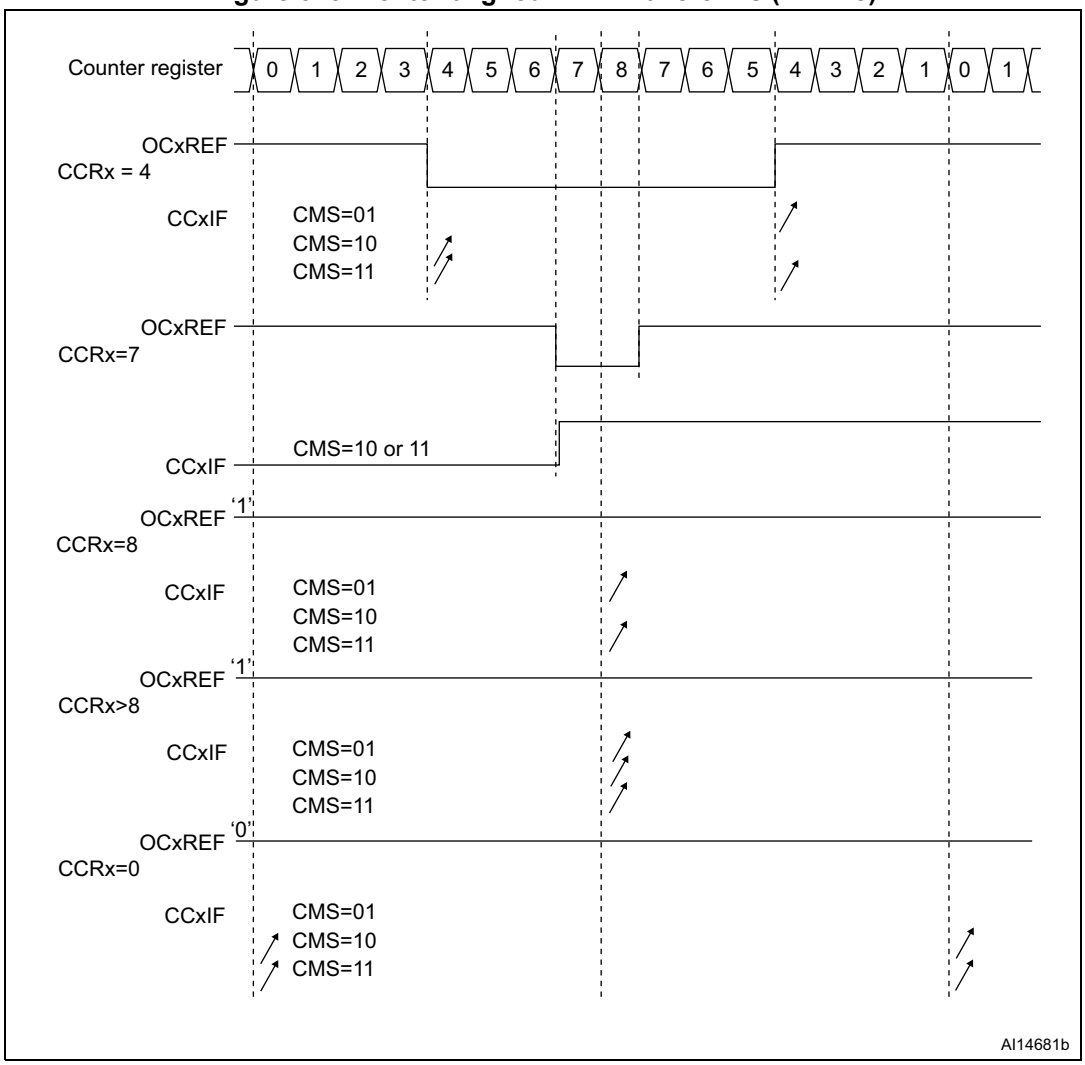

Hints on using center-aligned mode:

- When starting in center-aligned mode, the current up-down configuration is used. It means that the counter counts up or down depending on the value written in the DIR bit

in the TIMx_CR1 register. Moreover, the DIR and CMS bits must not be changed at the same time by the software.

- Writing to the counter while running in center-aligned mode is not recommended as it can lead to unexpected results. In particular:
  - The direction is not updated if a value greater than the auto-reload value is written in the counter (TIMx_CNT>TIMx_ARR). For example, if the counter was counting up, it continues to count up.
  - The direction is updated if 0 or the TIMx_ARR value is written in the counter but no Update Event UEV is generated.
- The safest way to use center-aligned mode is to generate an update by software (setting the UG bit in the TIMx_EGR register) just before starting the counter and not to write the counter while it is running.

31.3.10 Asymmetric PWM mode

Asymmetric mode allows two center-aligned PWM signals to be generated with a programmable phase shift. While the frequency is determined by the value of the TIMx_ARR register, the duty cycle and the phase-shift are determined by a pair of TIMx_CCRx registers. One register controls the PWM during up-counting, the second during down counting, so that PWM is adjusted every half PWM cycle:

- OC1REFC (or OC2REFC) is controlled by TIMx_CCR1 and TIMx_CCR2
- OC3REFC (or OC4REFC) is controlled by TIMx_CCR3 and TIMx_CCR4

Asymmetric PWM mode can be selected independently on two channels (one OCx output per pair of CCR registers) by writing ‘1110’ (Asymmetric PWM mode 1) or ‘1111’ (Asymmetric PWM mode 2) in the OCxM bits in the TIMx_CCMRx register.

Note: The OCxM[3:0] bit field is split into two parts for compatibility reasons, the most significant bit is not contiguous with the 3 least significant ones.

When a given channel is used as asymmetric PWM channel, its secondary channel can also be used. For instance, if an OC1REFC signal is generated on channel 1 (Asymmetric PWM mode 1), it is possible to output either the OC2REF signal on channel 2, or an OC2REFC signal resulting from asymmetric PWM mode 2.

Figure 316 shows an example of signals that can be generated using Asymmetric PWM mode (channels 1 to 4 are configured in Asymmetric PWM mode 1).

Figure 316. Generation of 2 phase-shifted PWM signals with 50% duty cycle

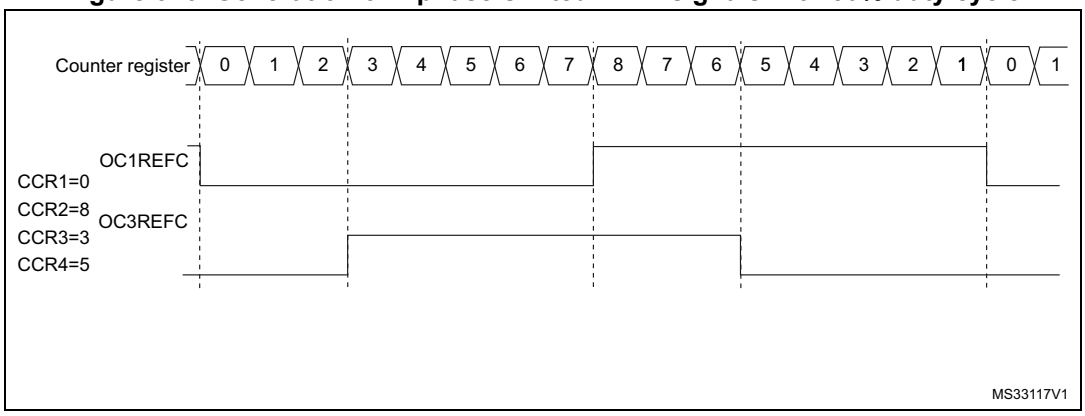

31.3.11 Combined PWM mode

Combined PWM mode allows two edge or center-aligned PWM signals to be generated with programmable delay and phase shift between respective pulses. While the frequency is determined by the value of the TIMx_ARR register, the duty cycle and delay are determined by the two TIMx_CCRx registers. The resulting signals, OCxREFC, are made of an OR or AND logical combination of two reference PWMs:

– OC1REFC (or OC2REFC) is controlled by TIMx_CCR1 and TIMx_CCR2

– OC3REFC (or OC4REFC) is controlled by TIMx_CCR3 and TIMx_CCR4

Combined PWM mode can be selected independently on two channels (one OCx output per pair of CCR registers) by writing ‘1100’ (Combined PWM mode 1) or ‘1101’ (Combined PWM mode 2) in the OCxM bits in the TIMx_CCMRx register.

When a given channel is used as combined PWM channel, its secondary channel must be configured in the opposite PWM mode (for instance, one in Combined PWM mode 1 and the other in Combined PWM mode 2).

Note: The OCxM[3:0] bit field is split into two parts for compatibility reasons, the most significant bit is not contiguous with the 3 least significant ones.

Figure 317 shows an example of signals that can be generated using Asymmetric PWM mode, obtained with the following configuration:

- Channel 1 is configured in Combined PWM mode 2,
- Channel 2 is configured in PWM mode 1,
- Channel 3 is configured in Combined PWM mode 2,
- Channel 4 is configured in PWM mode 1

Figure 317. Combined PWM mode on channels 1 and 3

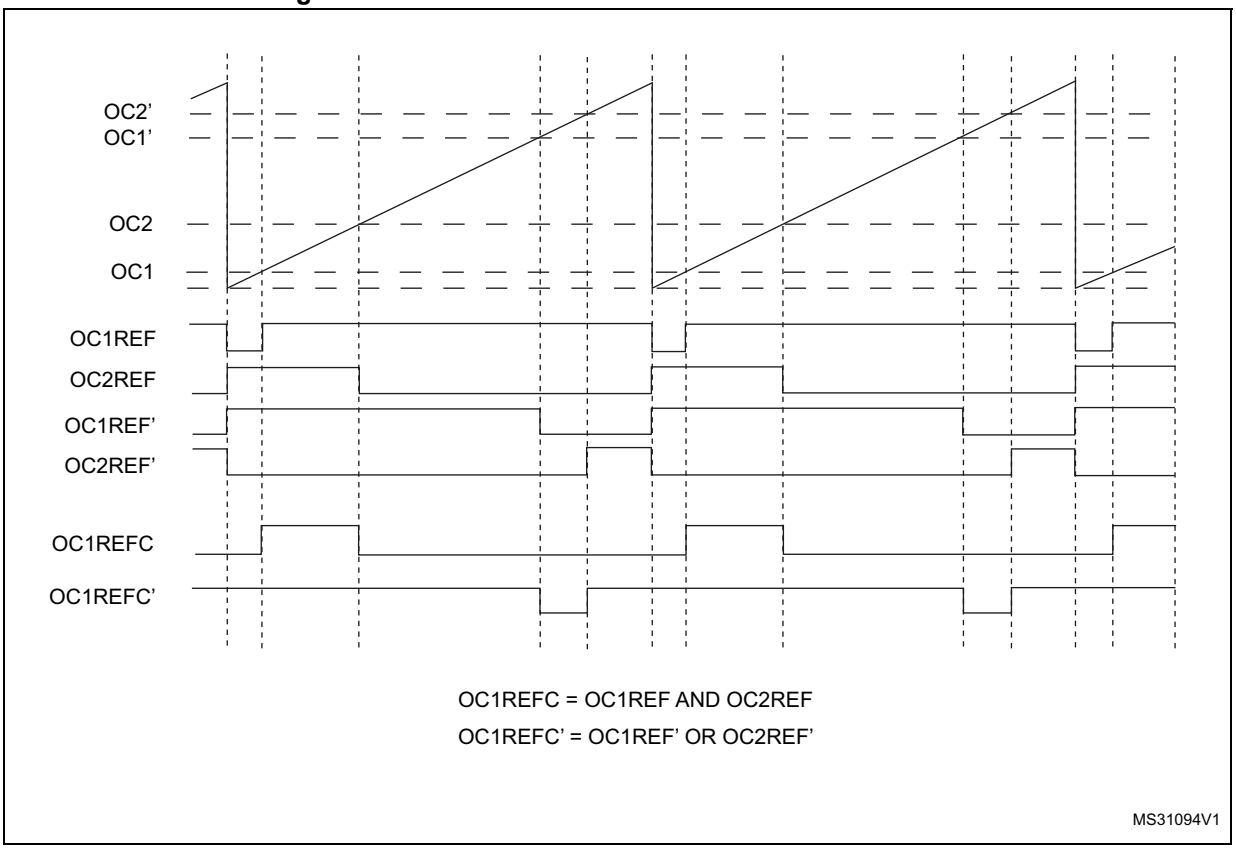

31.3.12 Clearing the OCxREF signal on an external event

The OCxREF signal of a given channel can be cleared when a high level is applied on the ocref_clr_int input (OCxCE enable bit in the corresponding TIMx_CCMRx register set to 1). OCxREF remains low until the next update event (UEV) occurs. This function can only be used in Output compare and PWM modes. It does not work in Forced mode.

OCREF_CLR_INPUT can be selected between the OCREF_CLR input and ETRF (ETR after the filter) by configuring the OCCS bit in the TIMx_SMCR register.

The OCxREF signal for a given channel can be reset by applying a high level on the ETRF input (OCxCE enable bit set to 1 in the corresponding TIMx_CCMRx register). OCxREF remains low until the next update event (UEV) occurs.

This function can be used only in the output compare and PWM modes. It does not work in forced mode.

For example, the OCxREF signal can be connected to the output of a comparator to be used for current handling. In this case, ETR must be configured as follows:

1. The external trigger prescaler should be kept off: bits ETPS[1:0] in the TIMx_SMCR register are cleared to 00.
2. The external clock mode 2 must be disabled: bit ECE in the TIM1_SMCR register is cleared to 0.
3. The external trigger polarity (ETP) and the external trigger filter (ETF) can be configured according to the application's needs.

Figure 318 shows the behavior of the OCxREF signal when the ETRF input becomes high, for both values of the OCxCE enable bit. In this example, the timer TIMx is programmed in PWM mode.

Figure 318. Clearing TIMx OCxREF

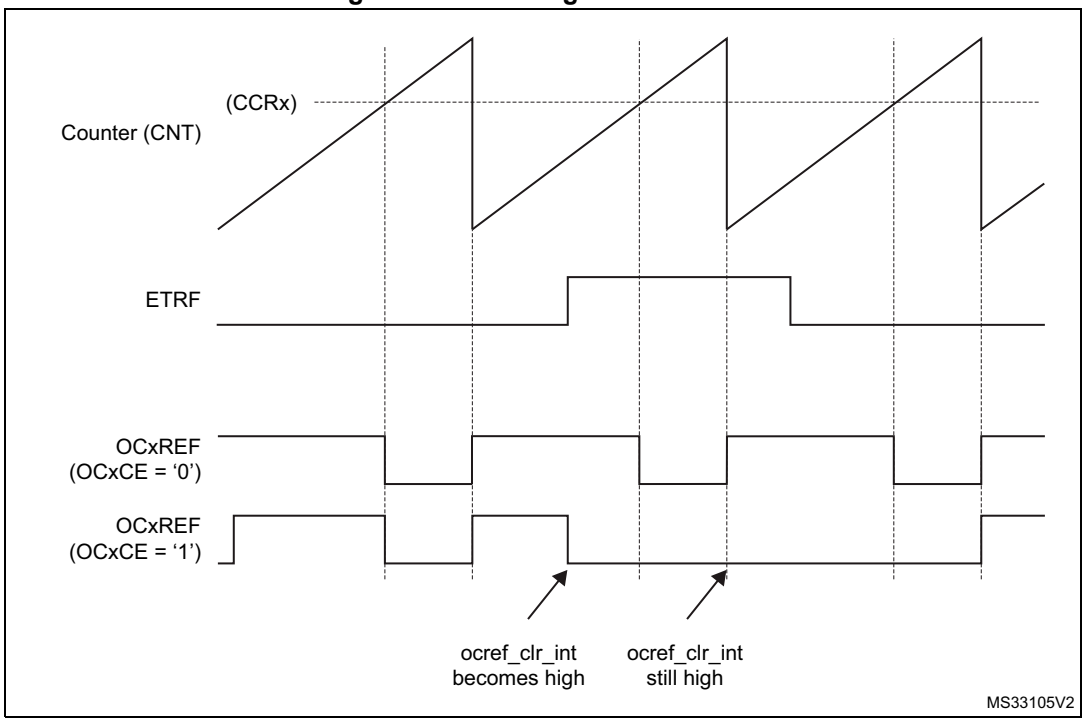

Note: In case of a PWM with a 100% duty cycle (if CCRx>ARR), OCxREF is enabled again at the next counter overflow.

31.3.13 One-pulse mode

One-pulse mode (OPM) is a particular case of the previous modes. It allows the counter to be started in response to a stimulus and to generate a pulse with a programmable length after a programmable delay.

Starting the counter can be controlled through the slave mode controller. Generating the waveform can be done in output compare mode or PWM mode. One-pulse mode is selected by setting the OPM bit in the TIMx_CR1 register. This makes the counter stop automatically at the next update event UEV.

A pulse can be correctly generated only if the compare value is different from the counter initial value. Before starting (when the timer is waiting for the trigger), the configuration must be:

- CNT<CCRx ≤ ARR (in particular, 0<CCRx),

Figure 319. Example of one-pulse mode.

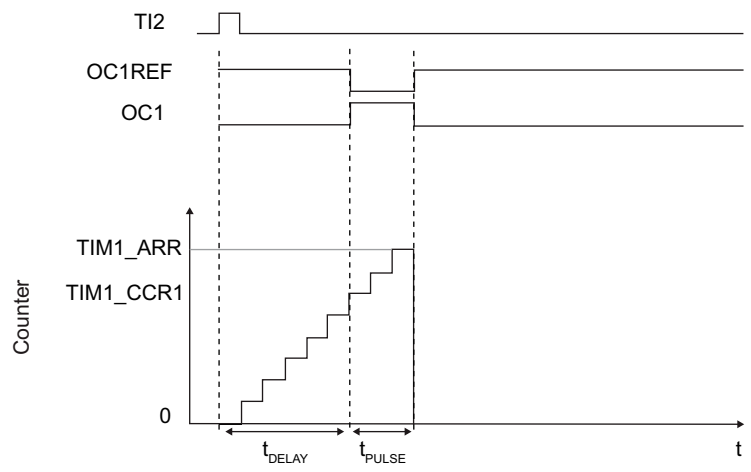

For example one may want to generate a positive pulse on OC1 with a length of t_{PULSE} and after a delay of t_{DELAY} as soon as a positive edge is detected on the TI2 input pin.

Let's use TI2FP2 as trigger 1:

1. Map TI2FP2 on TI2 by writing CC2S=01 in the TIMx_CCMR1 register.
2. TI2FP2 must detect a rising edge, write CC2P=0 and CC2NP='0' in the TIMx_CCER register.
3. Configure TI2FP2 as trigger for the slave mode controller (TRGI) by writing TS=110 in the TIMx_SMCR register.
4. TI2FP2 is used to start the counter by writing SMS to '110 in the TIMx_SMCR register (trigger mode).

The OPM waveform is defined by writing the compare registers (taking into account the clock frequency and the counter prescaler).

- The t_{DELAY} is defined by the value written in the TIMx_CCR1 register.
- The t_{PULSE} is defined by the difference between the auto-reload value and the compare value (TIMx_ARR - TIMx_CCR1).
- Let's say one want to build a waveform with a transition from '0 to '1 when a compare match occurs and a transition from '1 to '0 when the counter reaches the auto-reload value. To do this PWM mode 2 must be enabled by writing OC1M=111 in the TIMx_CCMR1 register. Optionally the preload registers can be enabled by writing OC1PE=1 in the TIMx_CCMR1 register and ARPE in the TIMx_CR1 register. In this case one has to write the compare value in the TIMx_CCR1 register, the auto-reload value in the TIMx_ARR register, generate an update by setting the UG bit and wait for external trigger event on TI2. CC1P is written to '0 in this example.

In our example, the DIR and CMS bits in the TIMx_CR1 register should be low.

Since only 1 pulse (Single mode) is needed, a 1 must be written in the OPM bit in the TIMx_CR1 register to stop the counter at the next update event (when the counter rolls over from the auto-reload value back to 0). When OPM bit in the TIMx_CR1 register is set to '0', so the Repetitive Mode is selected.

Particular case: OCx fast enable:

In One-pulse mode, the edge detection on TIx input set the CEN bit which enables the counter. Then the comparison between the counter and the compare value makes the output toggle. But several clock cycles are needed for these operations and it limits the minimum delay t_{DELAY} min we can get.

If one wants to output a waveform with the minimum delay, the OCxFE bit can be set in the TIMx_CCMRx register. Then OCxRef (and OCx) is forced in response to the stimulus, without taking in account the comparison. Its new level is the same as if a compare match had occurred. OCxFE acts only if the channel is configured in PWM1 or PWM2 mode.

31.3.14 Retriggerable one pulse mode (OPM)

This mode allows the counter to be started in response to a stimulus and to generate a pulse with a programmable length, but with the following differences with Non-retriggerable one pulse mode described in *Section 31.3.13*:

- The pulse starts as soon as the trigger occurs (no programmable delay)
- The pulse is extended if a new trigger occurs before the previous one is completed

The timer must be in Slave mode, with the bits SMS[3:0] = '1000' (Combined Reset + trigger mode) in the TIMx_SMCR register, and the OCxM[3:0] bits set to '1000' or '1001' for Retriggerable OPM mode 1 or 2.

If the timer is configured in Up-counting mode, the corresponding CCRx must be set to 0 (the ARR register sets the pulse length). If the timer is configured in Down-counting mode CCRx must be above or equal to ARR.

Note: In retriggerable one pulse mode, the CCxIF flag is not significant.

The OCxM[3:0] and SMS[3:0] bit fields are split into two parts for compatibility reasons, the most significant bit is not contiguous with the 3 least significant ones.

This mode must not be used with center-aligned PWM modes. It is mandatory to have CMS[1:0] = 00 in TIMx_CR1.

Figure 320. Retriggerable one-pulse mode.

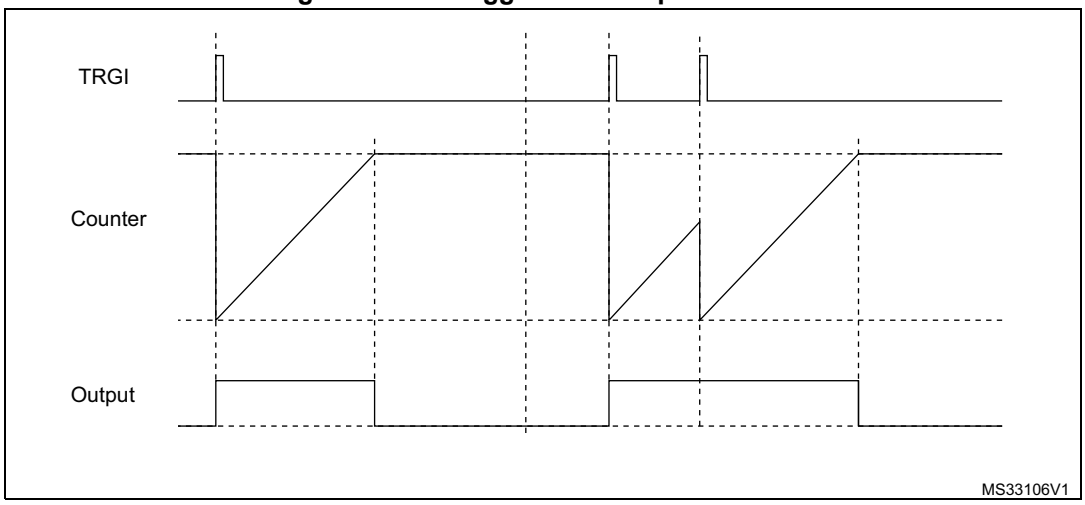

31.3.15 Encoder interface mode

To select Encoder Interface mode write SMS=‘001 in the TIMx_SMCR register if the counter is counting on TI2 edges only, SMS=010 if it is counting on TI1 edges only and SMS=011 if it is counting on both TI1 and TI2 edges.

Select the TI1 and TI2 polarity by programming the CC1P and CC2P bits in the TIMx_CCER register. CC1NP and CC2NP must be kept cleared. When needed, the input filter can be programmed as well. CC1NP and CC2NP must be kept low.

The two inputs TI1 and TI2 are used to interface to an incremental encoder. Refer to *Table 201*. The counter is clocked by each valid transition on TI1FP1 or TI2FP2 (TI1 and TI2 after input filter and polarity selection, TI1FP1=TI1 if not filtered and not inverted, TI2FP2=TI2 if not filtered and not inverted) assuming that it is enabled (CEN bit in TIMx_CR1 register written to ‘1). The sequence of transitions of the two inputs is evaluated and generates count pulses as well as the direction signal. Depending on the sequence the counter counts up or down, the DIR bit in the TIMx_CR1 register is modified by hardware accordingly. The DIR bit is calculated at each transition on any input (TI1 or TI2), whatever the counter is counting on TI1 only, TI2 only or both TI1 and TI2.

Encoder interface mode acts simply as an external clock with direction selection. This means that the counter just counts continuously between 0 and the auto-reload value in the TIMx_ARR register (0 to ARR or ARR down to 0 depending on the direction). So the TIMx_ARR must be configured before starting. In the same way, the capture, compare, prescaler, trigger output features continue to work as normal.

In this mode, the counter is modified automatically following the speed and the direction of the-quadrature encoder and its content, therefore, always represents the encoder’s position. The count direction correspond to the rotation direction of the connected sensor. The table summarizes the possible combinations, assuming TI1 and TI2 do not switch at the same time.

Table 201. Counting direction versus encoder signals

Active edge	Level on opposite signal (TI1FP1 for TI2, TI2FP2 for TI1)	TI1FP1 signal		TI2FP2 signal	
		Rising	Falling	Rising	Falling
Counting on TI1 only	High	Down	Up	No Count	No Count
	Low	Up	Down	No Count	No Count
Counting on TI2 only	High	No Count	No Count	Up	Down
	Low	No Count	No Count	Down	Up
Counting on TI1 and TI2	High	Down	Up	Up	Down
	Low	Up	Down	Down	Up

An external incremental encoder can be connected directly to the MCU without external interface logic. However, comparators are normally be used to convert the encoder's differential outputs to digital signals. This greatly increases noise immunity. The third encoder output which indicate the mechanical zero position, may be connected to an external interrupt input and trigger a counter reset.

Figure 321 gives an example of counter operation, showing count signal generation and direction control. It also shows how input jitter is compensated where both edges are selected. This might occur if the sensor is positioned near to one of the switching points. For this example we assume that the configuration is the following:

- CC1S= 01 (TIMx_CCMR1 register, TI1FP1 mapped on TI1)
- CC2S= 01 (TIMx_CCMR2 register, TI2FP2 mapped on TI2)
- CC1P and CC1NP = '0' (TIMx_CCER register, TI1FP1 noninverted, TI1FP1=TI1)
- CC2P and CC2NP = '0' (TIMx_CCER register, TI2FP2 noninverted, TI2FP2=TI2)
- SMS= 011 (TIMx_SMCR register, both inputs are active on both rising and falling edges)
- CEN= 1 (TIMx_CR1 register, Counter is enabled)

Figure 321. Example of counter operation in encoder interface mode

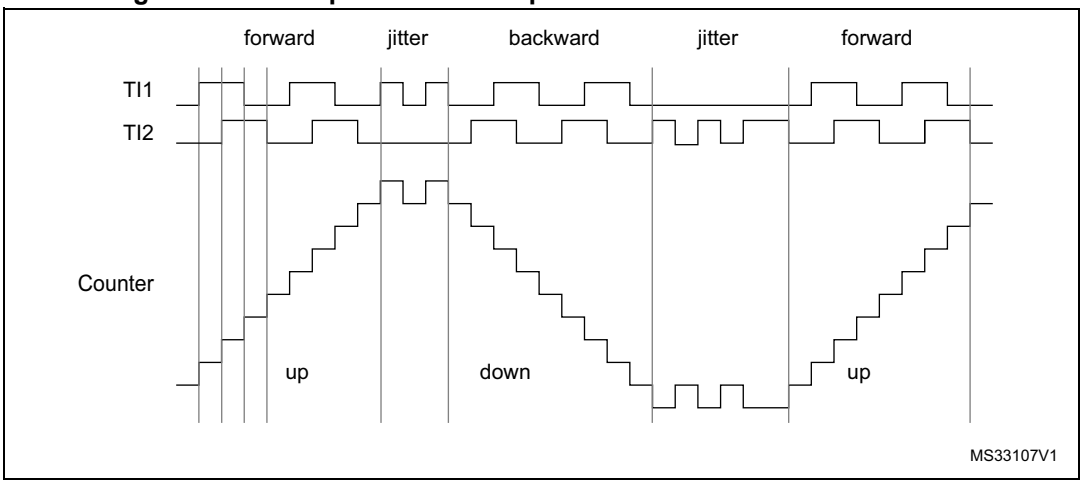

Figure 322 gives an example of counter behavior when TI1FP1 polarity is inverted (same configuration as above except CC1P=1).

Figure 322. Example of encoder interface mode with TI1FP1 polarity inverted

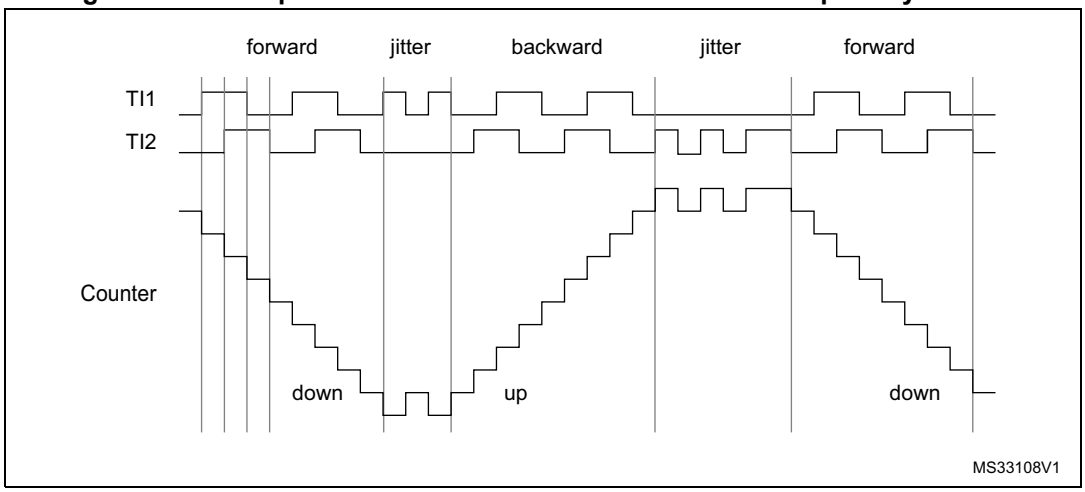

The timer, when configured in Encoder Interface mode provides information on the sensor's current position. Dynamic information can be obtained (speed, acceleration, deceleration) by measuring the period between two encoder events using a second timer configured in capture mode. The output of the encoder which indicates the mechanical zero can be used for this purpose. Depending on the time between two events, the counter can also be read at regular times. This can be done by latching the counter value into a third input capture register if available (then the capture signal must be periodic and can be generated by another timer). when available, it is also possible to read its value through a DMA request generated by a Real-Time clock.

31.3.16 UIF bit remapping

The IUFREMAP bit in the TIMx_CR1 register forces a continuous copy of the update interrupt flag (UIF) into bit 31 of the timer counter register's bit 31 (TIMxCNT[31]). This allows to atomically read both the counter value and a potential roll-over condition signaled by the UIFCPY flag. It eases the calculation of angular speed by avoiding race conditions caused, for instance, by a processing shared between a background task (counter reading) and an interrupt (update interrupt).

There is no latency between the UIF and UIFCPY flag assertions.

In 32-bit timer implementations, when the IUFREMAP bit is set, bit 31 of the counter is overwritten by the UIFCPY flag upon read access (the counter's most significant bit is only accessible in write mode).

31.3.17 Timer input XOR function

The TI1S bit in the TIM1xx_CR2 register, allows the input filter of channel 1 to be connected to the output of a XOR gate, combining the three input pins TIMx_CH1 to TIMx_CH3.

The XOR output can be used with all the timer input functions such as trigger or input capture.

An example of this feature used to interface Hall sensors is given in *Section 30.3.25: Interfacing with Hall sensors on page 960*.

31.3.18 Timers and external trigger synchronization

The TIMx Timers can be synchronized with an external trigger in several modes: Reset mode, Gated mode and Trigger mode.

Slave mode: Reset mode

The counter and its prescaler can be reinitialized in response to an event on a trigger input. Moreover, if the URS bit from the TIMx_CR1 register is low, an update event UEV is generated. Then all the preloaded registers (TIMx_ARR, TIMx_CCRx) are updated.

In the following example, the upcounter is cleared in response to a rising edge on TI1 input:

1. Configure the channel 1 to detect rising edges on TI1. Configure the input filter duration (in this example, we do not need any filter, so we keep IC1F=0000). The capture prescaler is not used for triggering, so it does not need to be configured. The CC1S bits select the input capture source only, CC1S = 01 in the TIMx_CCMR1 register. Write CC1P=0 and CC1NP=0 in TIMx_CCER register to validate the polarity (and detect rising edges only).
2. Configure the timer in reset mode by writing SMS=100 in TIMx_SMCR register. Select TI1 as the input source by writing TS=101 in TIMx_SMCR register.
3. Start the counter by writing CEN=1 in the TIMx_CR1 register.

The counter starts counting on the internal clock, then behaves normally until TI1 rising edge. When TI1 rises, the counter is cleared and restarts from 0. In the meantime, the trigger flag is set (TIF bit in the TIMx_SR register) and an interrupt request, or a DMA request can be sent if enabled (depending on the TIE and TDE bits in TIMx_DIER register).

The following figure shows this behavior when the auto-reload register TIMx_ARR=0x36. The delay between the rising edge on TI1 and the actual reset of the counter is due to the resynchronization circuit on TI1 input.

Figure 323. Control circuit in reset mode

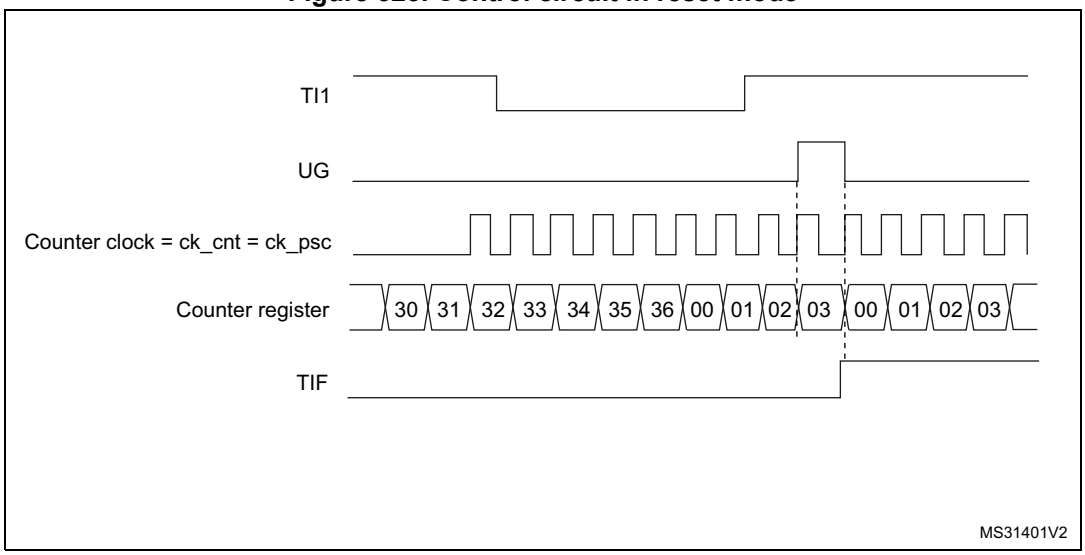

Slave mode: Gated mode

The counter can be enabled depending on the level of a selected input.

In the following example, the upcounter counts only when TI1 input is low:

1. Configure the channel 1 to detect low levels on TI1. Configure the input filter duration (in this example, we do not need any filter, so we keep IC1F=0000). The capture prescaler is not used for triggering, so it does not need to be configured. The CC1S bits select the input capture source only, CC1S=01 in TIMx_CCMR1 register. Write CC1P=1 and CC1NP=0 in TIMx_CCER register to validate the polarity (and detect low level only).
2. Configure the timer in gated mode by writing SMS=101 in TIMx_SMCR register. Select TI1 as the input source by writing TS=101 in TIMx_SMCR register.
3. Enable the counter by writing CEN=1 in the TIMx_CR1 register (in gated mode, the counter doesn't start if CEN=0, whatever is the trigger input level).

The counter starts counting on the internal clock as long as TI1 is low and stops as soon as TI1 becomes high. The TIF flag in the TIMx_SR register is set both when the counter starts or stops.

The delay between the rising edge on TI1 and the actual stop of the counter is due to the resynchronization circuit on TI1 input.

Figure 324. Control circuit in gated mode

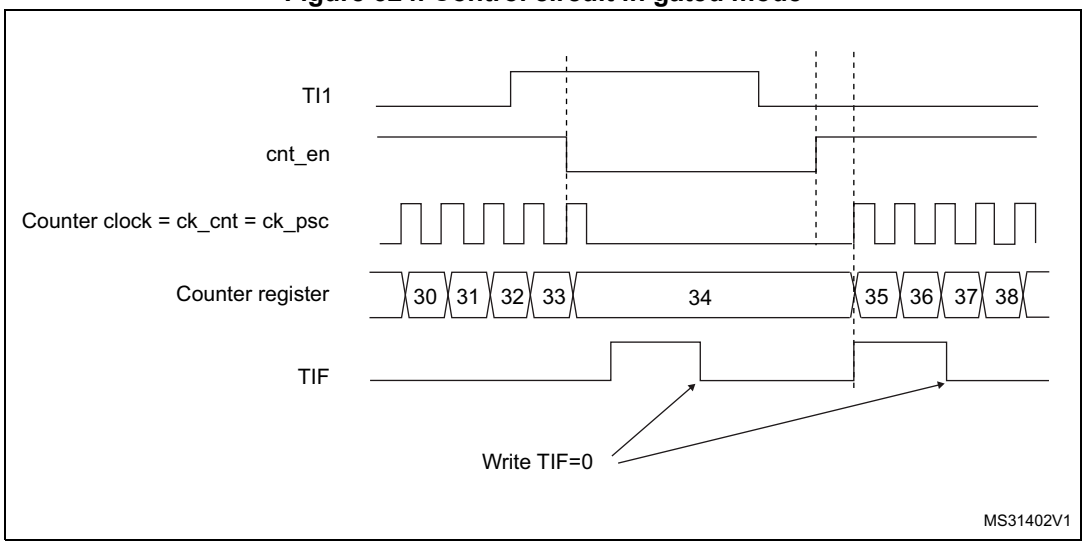

1. The configuration "CCxP=CCxNP=1" (detection of both rising and falling edges) does not have any effect in gated mode because gated mode acts on a level and not on an edge.

Note: The configuration "CCxP=CCxNP=1" (detection of both rising and falling edges) does not have any effect in gated mode because gated mode acts on a level and not on an edge.

Slave mode: Trigger mode

The counter can start in response to an event on a selected input.

In the following example, the upcounter starts in response to a rising edge on TI2 input:

1. Configure the channel 2 to detect rising edges on TI2. Configure the input filter duration (in this example, we do not need any filter, so we keep IC2F=0000). The capture prescaler is not used for triggering, so it does not need to be configured. CC2S bits are selecting the input capture source only, CC2S=01 in TIMx_CCMR1 register. Write

CC2P=1 and CC2NP=0 in TIMx_CCER register to validate the polarity (and detect low level only).

2. Configure the timer in trigger mode by writing SMS=110 in TIMx_SMCR register. Select TI2 as the input source by writing TS=110 in TIMx_SMCR register.

When a rising edge occurs on TI2, the counter starts counting on the internal clock and the TIF flag is set.

The delay between the rising edge on TI2 and the actual start of the counter is due to the resynchronization circuit on TI2 input.

Figure 325. Control circuit in trigger mode

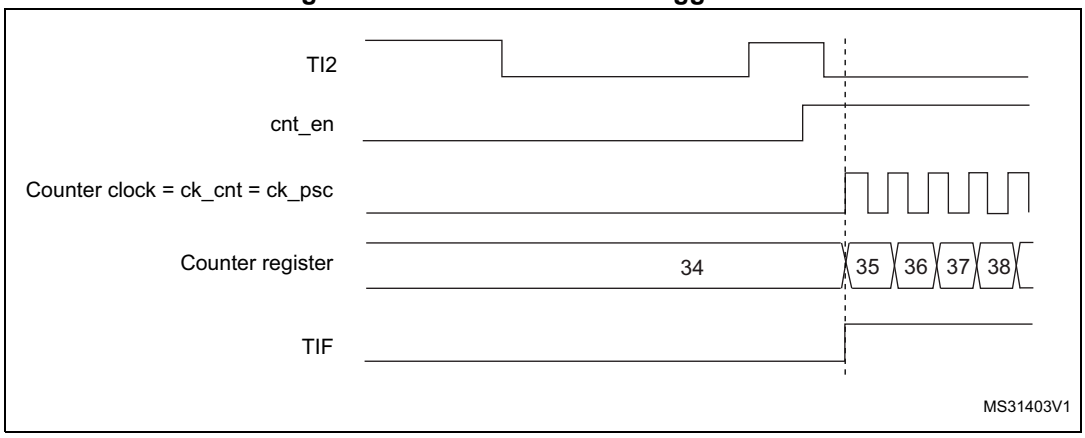

Slave mode: External Clock mode 2 + trigger mode

The external clock mode 2 can be used in addition to another slave mode (except external clock mode 1 and encoder mode). In this case, the ETR signal is used as external clock input, and another input can be selected as trigger input when operating in reset mode, gated mode or trigger mode. It is recommended not to select ETR as TRGI through the TS bits of TIMx_SMCR register.

In the following example, the upcounter is incremented at each rising edge of the ETR signal as soon as a rising edge of TI1 occurs:

1. Configure the external trigger input circuit by programming the TIMx_SMCR register as follows:
   - ETF = 0000: no filter
   - ETPS=00: prescaler disabled
   - ETP=0: detection of rising edges on ETR and ECE=1 to enable the external clock mode 2.
2. Configure the channel 1 as follows, to detect rising edges on TI:
   - IC1F=0000: no filter.
   - The capture prescaler is not used for triggering and does not need to be configured.
   - CC1S=01in TIMx_CCMR1 register to select only the input capture source
   - CC1P=0 and CC1NP=0 in TIMx_CCER register to validate the polarity (and detect rising edge only).
3. Configure the timer in trigger mode by writing SMS=110 in TIMx_SMCR register. Select TI1 as the input source by writing TS=101 in TIMx_SMCR register.

A rising edge on TI1 enables the counter and sets the TIF flag. The counter then counts on ETR rising edges.

The delay between the rising edge of the ETR signal and the actual reset of the counter is due to the resynchronization circuit on ETRP input.

Figure 326. Control circuit in external clock mode 2 + trigger mode

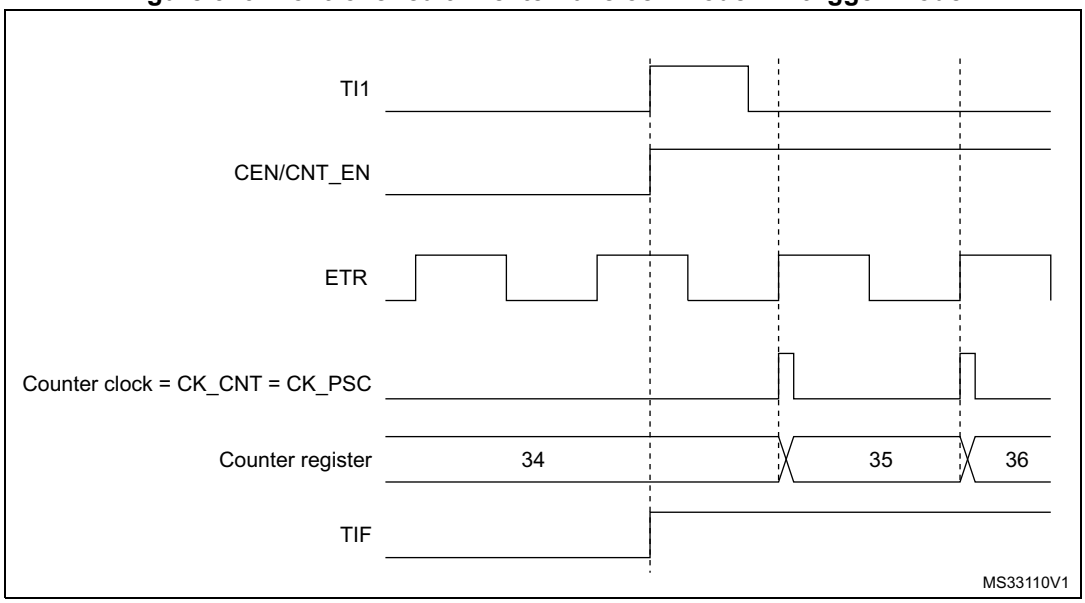

31.3.19 Timer synchronization

The TIMx timers are linked together internally for timer synchronization or chaining. When one Timer is configured in Master Mode, it can reset, start, stop or clock the counter of another Timer configured in Slave Mode.

Figure 327: Master/Slave timer example presents an overview of the trigger selection and the master mode selection blocks.

Figure 327. Master/Slave timer example

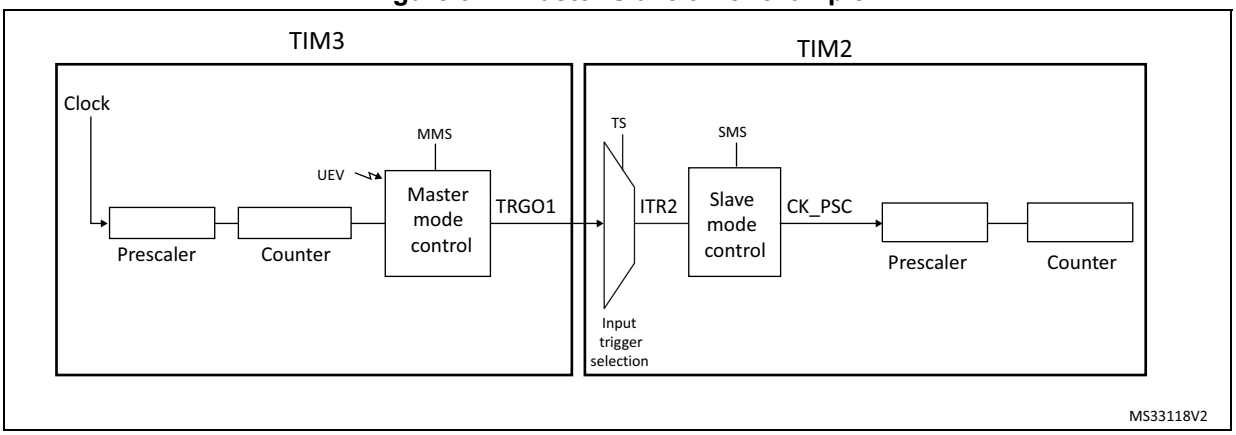

Using one timer as prescaler for another timer

For example, TIM3 can be configured to act as a prescaler for TIM2. Refer to *Figure 327*. To do this:

1. Configure TIM3 in master mode so that it outputs a periodic trigger signal on each update event UEV. If MMS=010 is written in the TIM3_CR2 register, a rising edge is output on TRGO each time an update event is generated.
2. To connect the TRGO output of TIM3 to TIM2, TIM2 must be configured in slave mode using ITR2 as internal trigger. This is selected through the TS bits in the TIM2_SMCR register (writing TS=010).
3. Then the slave mode controller must be put in external clock mode 1 (write SMS=111 in the TIM2_SMCR register). This causes TIM2 to be clocked by the rising edge of the periodic TIM3 trigger signal (which correspond to the TIM3 counter overflow).
4. Finally both timers must be enabled by setting their respective CEN bits (TIMx_CR1 register).

Note: If OCx is selected on TIM3 as the trigger output (MMS=1xx), its rising edge is used to clock the counter of TIM2.

Using one timer to enable another timer

In this example, we control the enable of TIM2 with the output compare 1 of Timer 3. Refer to *Figure 327* for connections. TIM2 counts on the divided internal clock only when OC1REF of TIM3 is high. Both counter clock frequencies are divided by 3 by the prescaler compared to CK_INT ($f_{CK_CNT} = f_{CK_INT}/3$).

1. Configure TIM3 master mode to send its Output Compare 1 Reference (OC1REF) signal as trigger output (MMS=100 in the TIM3_CR2 register).
2. Configure the TIM3 OC1REF waveform (TIM3_CCMR1 register).
3. Configure TIM2 to get the input trigger from TIM3 (TS=010 in the TIM2_SMCR register).
4. Configure TIM2 in gated mode (SMS=101 in TIM2_SMCR register).
5. Enable TIM2 by writing ‘1 in the CEN bit (TIM2_CR1 register).
6. Start TIM3 by writing ‘1 in the CEN bit (TIM3_CR1 register).

Note: The counter 2 clock is not synchronized with counter 1, this mode only affects the TIM2 counter enable signal.

Figure 328. Gating TIM2 with OC1REF of TIM3

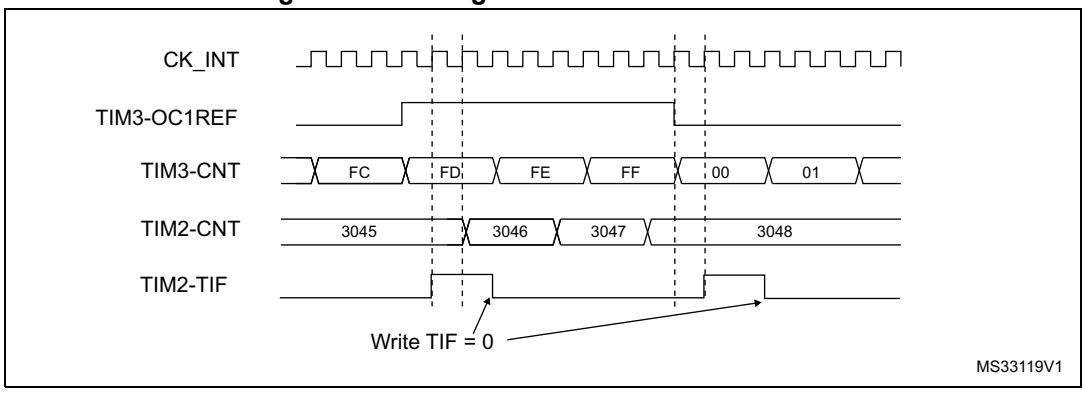

In the example in *Figure 328*, the TIM2 counter and prescaler are not initialized before being started. So they start counting from their current value. It is possible to start from a given value by resetting both timers before starting TIM3. Then any value can be written in the timer counters. The timers can easily be reset by software using the UG bit in the TIMx_EGR registers.

In the next example (refer to *Figure 329*), we synchronize TIM3 and TIM2. TIM3 is the master and starts from 0. TIM2 is the slave and starts from 0xE7. The prescaler ratio is the same for both timers. TIM2 stops when TIM3 is disabled by writing ‘0 to the CEN bit in the TIM3_CR1 register:

1. Configure TIM3 master mode to send its Output Compare 1 Reference (OC1REF) signal as trigger output (MMS=100 in the TIM3_CR2 register).
2. Configure the TIM3 OC1REF waveform (TIM3_CCMR1 register).
3. Configure TIM2 to get the input trigger from TIM3 (TS=010 in the TIM2_SMCR register).
4. Configure TIM2 in gated mode (SMS=101 in TIM2_SMCR register).
5. Reset TIM3 by writing ‘1 in UG bit (TIM3_EGR register).
6. Reset TIM2 by writing ‘1 in UG bit (TIM2_EGR register).
7. Initialize TIM2 to 0xE7 by writing ‘0xE7’ in the TIM2 counter (TIM2_CNTL).
8. Enable TIM2 by writing ‘1 in the CEN bit (TIM2_CR1 register).
9. Start TIM3 by writing ‘1 in the CEN bit (TIM3_CR1 register).
10. Stop TIM3 by writing ‘0 in the CEN bit (TIM3_CR1 register).

Figure 329. Gating TIM2 with Enable of TIM3

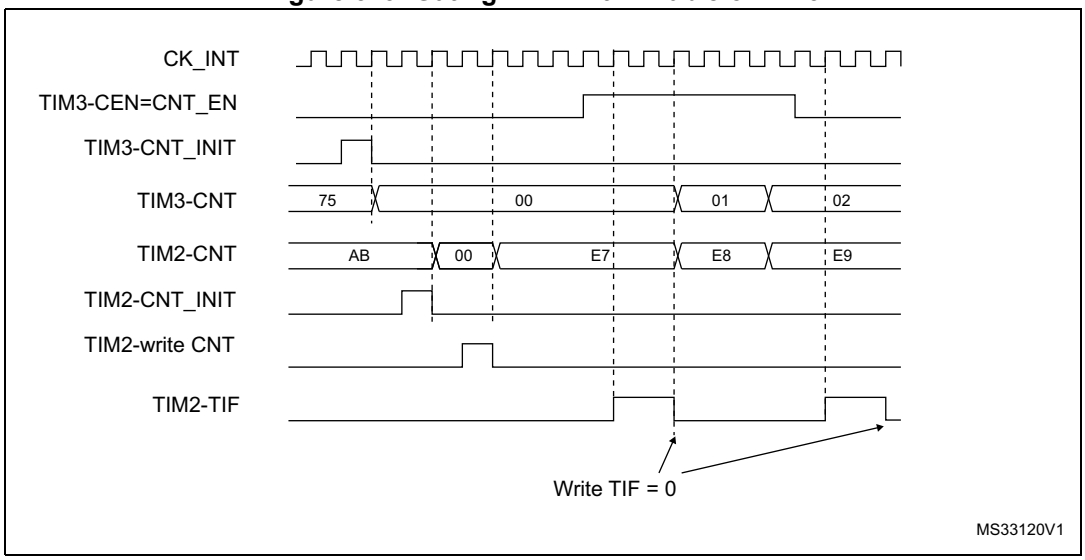

Using one timer to start another timer

In this example, we set the enable of Timer 2 with the update event of Timer 3. Refer to *Figure 327* for connections. Timer 2 starts counting from its current value (which can be non-zero) on the divided internal clock as soon as the update event is generated by Timer 1. When Timer 2 receives the trigger signal its CEN bit is automatically set and the counter counts until we write ‘0 to the CEN bit in the TIM2_CR1 register. Both counter clock frequencies are divided by 3 by the prescaler compared to CK_INT ($f_{CK_CNT} = f_{CK_INT}/3$).

1. Configure TIM3 master mode to send its Update Event (UEV) as trigger output (MMS=010 in the TIM3_CR2 register).
2. Configure the TIM3 period (TIM3_ARR registers).
3. Configure TIM2 to get the input trigger from TIM3 (TS=010 in the TIM2_SMCR register).
4. Configure TIM2 in trigger mode (SMS=110 in TIM2_SMCR register).
5. Start TIM3 by writing ‘1 in the CEN bit (TIM3_CR1 register).

Figure 330. Triggering TIM2 with update of TIM3

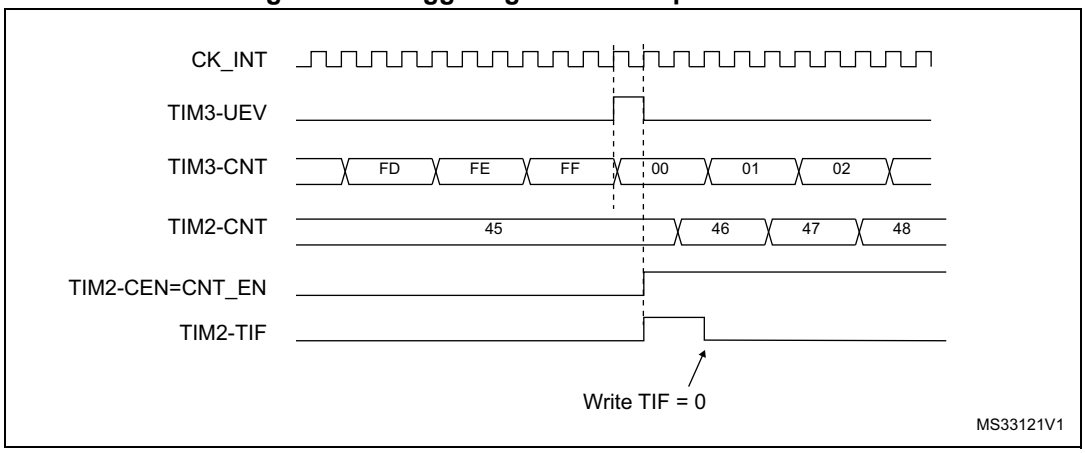

As in the previous example, both counters can be initialized before starting counting. *Figure 331* shows the behavior with the same configuration as in *Figure 330* but in trigger mode instead of gated mode (SMS=110 in the TIM2_SMCR register).

Figure 331. Triggering TIM2 with Enable of TIM3

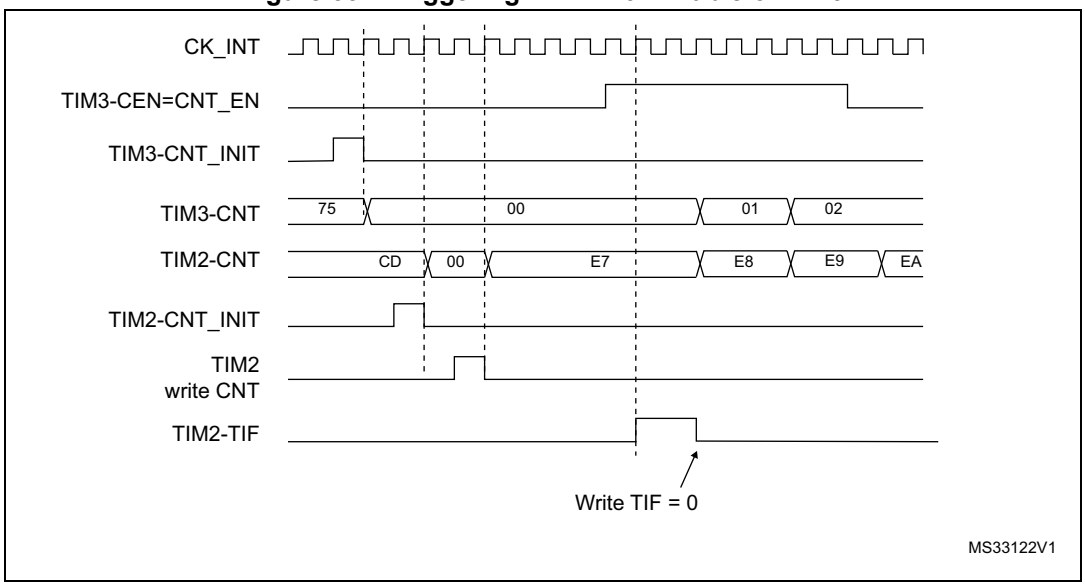

Starting 2 timers synchronously in response to an external trigger

In this example, we set the enable of TIM3 when its TI1 input rises, and the enable of TIM2 with the enable of TIM3. Refer to *Figure 327* for connections. To ensure the counters are

aligned, TIM3 must be configured in Master/Slave mode (slave with respect to TI1, master with respect to TIM2):

1. Configure TIM3 master mode to send its Enable as trigger output (MMS=001 in the TIM3_CR2 register).
2. Configure TIM3 slave mode to get the input trigger from TI1 (TS=100 in the TIM3_SMCR register).
3. Configure TIM3 in trigger mode (SMS=110 in the TIM3_SMCR register).
4. Configure the TIM3 in Master/Slave mode by writing MSM=1 (TIM3_SMCR register).
5. Configure TIM2 to get the input trigger from TIM3 (TS=000 in the TIM2_SMCR register).
6. Configure TIM2 in trigger mode (SMS=110 in the TIM2_SMCR register).

When a rising edge occurs on TI1 (TIM3), both counters starts counting synchronously on the internal clock and both TIF flags are set.

Note: In this example both timers are initialized before starting (by setting their respective UG bits). Both counters starts from 0, but an offset can easily be inserted between them by writing any of the counter registers (TIMx_CNT). One can see that the master/slave mode insert a delay between CNT_EN and CK_PSC on TIM3.

Figure 332. Triggering TIM3 and TIM2 with TIM3 TI1 input

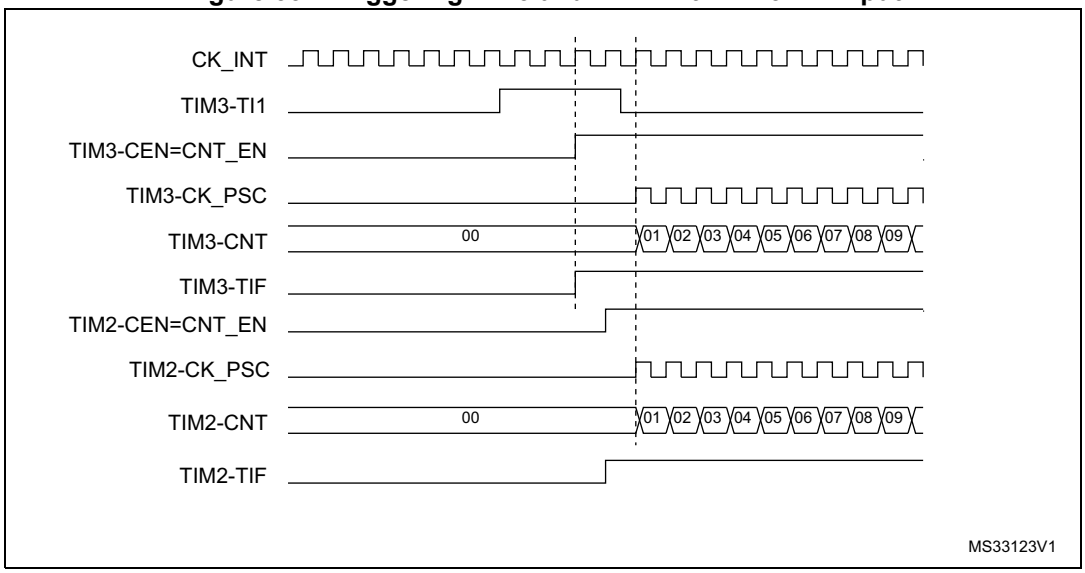

Note: The clock of the slave peripherals (timer, ADC, ...) receiving the TRGO or the TRGO2 signals must be enabled prior to receive events from the master timer, and the clock frequency (prescaler) must not be changed on-the-fly while triggers are received from the master timer.

31.3.20 DMA burst mode

The TIMx timers have the capability to generate multiple DMA requests upon a single event. The main purpose is to be able to re-program part of the timer multiple times without software overhead, but it can also be used to read several registers in a row, at regular intervals.

The DMA controller destination is unique and must point to the virtual register TIMx_DMAR. On a given timer event, the timer launches a sequence of DMA requests (burst). Each write into the TIMx_DMAR register is actually redirected to one of the timer registers.

The DBL[4:0] bits in the TIMx_DCR register set the DMA burst length. The timer recognizes a burst transfer when a read or a write access is done to the TIMx_DMAR address), i.e. the number of transfers (either in half-words or in bytes).

The DBA[4:0] bits in the TIMx_DCR registers define the DMA base address for DMA transfers (when read/write access are done through the TIMx_DMAR address). DBA is defined as an offset starting from the address of the TIMx_CR1 register:

Example:

00000: TIMx_CR1

00001: TIMx_CR2

00010: TIMx_SMCR

As an example, the timer DMA burst feature is used to update the contents of the CCRx registers (x = 2, 3, 4) upon an update event, with the DMA transferring half words into the CCRx registers.

This is done in the following steps:

1. Configure the corresponding DMA channel as follows:
   - DMA channel peripheral address is the DMAR register address
   - DMA channel memory address is the address of the buffer in the RAM containing the data to be transferred by DMA into CCRx registers.
   - Number of data to transfer = 3 (See note below).
   - Circular mode disabled.
2. Configure the DCR register by configuring the DBA and DBL bit fields as follows: DBL = 3 transfers, DBA = 0xE.
3. Enable the TIMx update DMA request (set the UDE bit in the DIER register).
4. Enable TIMx
5. Enable the DMA channel

This example is for the case where every CCRx register has to be updated once. If every CCRx register is to be updated twice for example, the number of data to transfer should be 6. Let's take the example of a buffer in the RAM containing data1, data2, data3, data4, data5 and data6. The data is transferred to the CCRx registers as follows: on the first update DMA request, data1 is transferred to CCR2, data2 is transferred to CCR3, data3 is transferred to CCR4 and on the second update DMA request, data4 is transferred to CCR2, data5 is transferred to CCR3 and data6 is transferred to CCR4.

Note: A null value can be written to the reserved registers.

31.3.21 Debug mode

When the microcontroller enters debug mode (Cortex®-M4 core - halted), the TIMx counter either continues to work normally or stops, depending on DBG_TIMx_STOP configuration bit in DBGMCU module. For more details, refer to *Section 48.16.2: Debug support for timers, RTC, watchdog, bxCAN and I²C*.

31.4 TIM2/TIM3/TIM4/TIM5 registers

Refer to *Section 1.2* for a list of abbreviations used in register descriptions.

The peripheral registers can be accessed by half-words (16-bit) or words (32-bit).

31.4.1 TIMx control register 1 (TIMx_CR1)(x = 2 to 5)

Address offset: 0x00

Reset value: 0x0000

15	14	13	12	11	10	9	8	7	6	5	4	3	2	1	0
Res.	Res.	Res.	Res.	UIFREMAP	Res.	CKD[1:0]		ARPE	CMS[1:0]		DIR	OPM	URS	UDIS	CEN
				rw		rw	rw	rw	rw	rw	rw	rw	rw	rw	rw

Bits 15:12 Reserved, must be kept at reset value.

Bit 11 **UIFREMAP**: UIF status bit remapping

0: No remapping. UIF status bit is not copied to TIMx_CNT register bit 31.
1: Remapping enabled. UIF status bit is copied to TIMx_CNT register bit 31.

Bit 10 Reserved, must be kept at reset value.

Bits 9:8 **CKD[1:0]**: Clock division

This bit-field indicates the division ratio between the timer clock (CK_INT) frequency and sampling clock used by the digital filters (ETR, TIx),

00: $t_{DTS} = t_{CK_INT}$
01: $t_{DTS} = 2 \times t_{CK_INT}$
10: $t_{DTS} = 4 \times t_{CK_INT}$
11: Reserved

Bit 7 **ARPE**: Auto-reload preload enable

0: TIMx_ARR register is not buffered
1: TIMx_ARR register is buffered

Bits 6:5 **CMS[1:0]**: Center-aligned mode selection

00: Edge-aligned mode. The counter counts up or down depending on the direction bit (DIR).
01: Center-aligned mode 1. The counter counts up and down alternatively. Output compare interrupt flags of channels configured in output (CCxS=00 in TIMx_CCMRx register) are set only when the counter is counting down.
10: Center-aligned mode 2. The counter counts up and down alternatively. Output compare interrupt flags of channels configured in output (CCxS=00 in TIMx_CCMRx register) are set only when the counter is counting up.
11: Center-aligned mode 3. The counter counts up and down alternatively. Output compare interrupt flags of channels configured in output (CCxS=00 in TIMx_CCMRx register) are set both when the counter is counting up or down.

Note: It is not allowed to switch from edge-aligned mode to center-aligned mode as long as the counter is enabled (CEN=1)

Bit 4 **DIR**: Direction

0: Counter used as upcounter
1: Counter used as downcounter

Note: This bit is read only when the timer is configured in Center-aligned mode or Encoder mode.

Bit 3 **OPM**: One-pulse mode

0: Counter is not stopped at update event

1: Counter stops counting at the next update event (clearing the bit CEN)

Bit 2 **URS**: Update request source

This bit is set and cleared by software to select the UEV event sources.

0: Any of the following events generate an update interrupt or DMA request if enabled. These events can be:

- Counter overflow/underflow
- Setting the UG bit
- Update generation through the slave mode controller

1: Only counter overflow/underflow generates an update interrupt or DMA request if enabled.

Bit 1 **UDIS**: Update disable

This bit is set and cleared by software to enable/disable UEV event generation.

0: UEV enabled. The Update (UEV) event is generated by one of the following events:

- Counter overflow/underflow
- Setting the UG bit
- Update generation through the slave mode controller

Buffered registers are then loaded with their preload values.

1: UEV disabled. The Update event is not generated, shadow registers keep their value (ARR, PSC, CCRx). However the counter and the prescaler are reinitialized if the UG bit is set or if a hardware reset is received from the slave mode controller.

Bit 0 **CEN**: Counter enable

0: Counter disabled

1: Counter enabled

Note: External clock, gated mode and encoder mode can work only if the CEN bit has been previously set by software. However trigger mode can set the CEN bit automatically by hardware.

CEN is cleared automatically in one-pulse mode, when an update event occurs.

31.4.2 TIMx control register 2 (TIMx_CR2)(x = 2 to 5)

Address offset: 0x04

Reset value: 0x0000

15	14	13	12	11	10	9	8	7	6	5	4	3	2	1	0
Res.	Res.	Res.	Res.	Res.	Res.	Res.	Res.	TI1S	MMS[2:0]			CCDS	Res.	Res.	Res.
								rw	rw	rw	rw	rw			

Bits 15:8 Reserved, must be kept at reset value.

Bit 7 **TI1S**: TI1 selection

0: The TIMx_CH1 pin is connected to TI1 input
1: The TIMx_CH1, CH2 and CH3 pins are connected to the TI1 input (XOR combination)
See also *Section 30.3.25: Interfacing with Hall sensors on page 960*

Bits 6:4 **MMS[2:0]**: Master mode selection

These bits allow to select the information to be sent in master mode to slave timers for synchronization (TRGO). The combination is as follows:

000: **Reset** - the UG bit from the TIMx_EGR register is used as trigger output (TRGO). If the reset is generated by the trigger input (slave mode controller configured in reset mode) then the signal on TRGO is delayed compared to the actual reset.

001: **Enable** - the Counter enable signal, CNT_EN, is used as trigger output (TRGO). It is useful to start several timers at the same time or to control a window in which a slave timer is enabled. The Counter Enable signal is generated by a logic AND between CEN control bit and the trigger input when configured in gated mode.

When the Counter Enable signal is controlled by the trigger input, there is a delay on TRGO, except if the master/slave mode is selected (see the MSM bit description in TIMx_SMCR register).

010: **Update** - The update event is selected as trigger output (TRGO). For instance a master timer can then be used as a prescaler for a slave timer.

011: **Compare Pulse** - The trigger output send a positive pulse when the CC1IF flag is to be set (even if it was already high), as soon as a capture or a compare match occurred. (TRGO)

100: **Compare** - OC1REF signal is used as trigger output (TRGO)
101: **Compare** - OC2REF signal is used as trigger output (TRGO)
110: **Compare** - OC3REF signal is used as trigger output (TRGO)
111: **Compare** - OC4REF signal is used as trigger output (TRGO)

Note: The clock of the slave timer or ADC must be enabled prior to receive events from the master timer, and must not be changed on-the-fly while triggers are received from the master timer.

Bit 3 **CCDS**: Capture/compare DMA selection

0: CCx DMA request sent when CCx event occurs
1: CCx DMA requests sent when update event occurs

Bits 2:0 Reserved, must be kept at reset value.

31.4.3 TIMx slave mode control register (TIMx_SMCR)(x = 2 to 5)

Address offset: 0x08

Reset value: 0x0000 0000

31	30	29	28	27	26	25	24	23	22	21	20	19	18	17	16
Res.	Res.	Res.	Res.	Res.	Res.	Res.	Res.	Res.	Res.	Res.	Res.	Res.	Res.	Res.	SMS[3]
															rw

15	14	13	12	11	10	9	8	7	6	5	4	3	2	1	0
ETP	ECE	ETPS[1:0]		ETF[3:0]				MSM	TS[2:0]			OCCS	SMS[2:0]		
rw	rw	rw	rw	rw	rw	rw	rw	rw	rw	rw	rw	rw	rw	rw	rw

Bits 31:17 Reserved, must be kept at reset value.

Bit 15 **ETP**: External trigger polarity

This bit selects whether ETR or $\overline{ETR}$ is used for trigger operations

0: ETR is non-inverted, active at high level or rising edge

1: ETR is inverted, active at low level or falling edge

Bit 14 **ECE**: External clock enable

This bit enables External clock mode 2.

0: External clock mode 2 disabled

1: External clock mode 2 enabled. The counter is clocked by any active edge on the ETRF signal.

Note: Setting the ECE bit has the same effect as selecting external clock mode 1 with TRGI connected to ETRF (SMS=111 and TS=111).

It is possible to simultaneously use external clock mode 2 with the following slave modes: reset mode, gated mode and trigger mode. Nevertheless, TRGI must not be connected to ETRF in this case (TS bits must not be 111).

If external clock mode 1 and external clock mode 2 are enabled at the same time, the external clock input is ETRF.

Bits 13:12 **ETPS[1:0]**: External trigger prescaler

External trigger signal ETRP frequency must be at most 1/4 of CK_INT frequency. A prescaler can be enabled to reduce ETRP frequency. It is useful when inputting fast external clocks.

00: Prescaler OFF

01: ETRP frequency divided by 2

10: ETRP frequency divided by 4

11: ETRP frequency divided by 8

Bits 11:8 **ETF[3:0]**: External trigger filter

This bit-field then defines the frequency used to sample ETRP signal and the length of the digital filter applied to ETRP. The digital filter is made of an event counter in which N consecutive events are needed to validate a transition on the output:

0000: No filter, sampling is done at f_{DTS}
0001: $f_{SAMPLING}=f_{CK_INT}$, N=2
0010: $f_{SAMPLING}=f_{CK_INT}$, N=4
0011: $f_{SAMPLING}=f_{CK_INT}$, N=8
0100: $f_{SAMPLING}=f_{DTS}/2$, N=6
0101: $f_{SAMPLING}=f_{DTS}/2$, N=8
0110: $f_{SAMPLING}=f_{DTS}/4$, N=6
0111: $f_{SAMPLING}=f_{DTS}/4$, N=8
1000: $f_{SAMPLING}=f_{DTS}/8$, N=6
1001: $f_{SAMPLING}=f_{DTS}/8$, N=8
1010: $f_{SAMPLING}=f_{DTS}/16$, N=5
1011: $f_{SAMPLING}=f_{DTS}/16$, N=6
1100: $f_{SAMPLING}=f_{DTS}/16$, N=8
1101: $f_{SAMPLING}=f_{DTS}/32$, N=5
1110: $f_{SAMPLING}=f_{DTS}/32$, N=6
1111: $f_{SAMPLING}=f_{DTS}/32$, N=8

Bit 7 **MSM**: Master/Slave mode

0: No action
1: The effect of an event on the trigger input (TRGI) is delayed to allow a perfect synchronization between the current timer and its slaves (through TRGO). It is useful if we want to synchronize several timers on a single external event.

Bits 6:4 **TS**: Trigger selection

This bit-field selects the trigger input to be used to synchronize the counter.
000: Internal Trigger 0 (ITR0).
001: Internal Trigger 1 (ITR1).
010: Internal Trigger 2 (ITR2).
011: Internal Trigger 3 (ITR3).
100: TI1 Edge Detector (TI1F_ED)
101: Filtered Timer Input 1 (TI1FP1)
110: Filtered Timer Input 2 (TI2FP2)
111: External Trigger input (ETRF)
See *Table 202: TIMx internal trigger connection on page 1065* for more details on ITRx meaning for each Timer.

Note: These bits must be changed only when they are not used (e.g. when SMS=000) to avoid wrong edge detections at the transition.

Bit 3 **OCCS**: OCREF clear selection

This bit is used to select the OCREF clear source
0: OCREF_CLR_INT is connected to the OCREF_CLR input
1: OCREF_CLR_INT is connected to ETRF

Bits 16, 2, 1, 0 **SMS[3:0]**: Slave mode selection

When external signals are selected the active edge of the trigger signal (TRGI) is linked to the polarity selected on the external input (see Input Control register and Control Register description.
0000: Slave mode disabled - if CEN = ‘1 then the prescaler is clocked directly by the internal clock.
0001: Encoder mode 1 - Counter counts up/down on TI1FP1 edge depending on TI2FP2 level.
0010: Encoder mode 2 - Counter counts up/down on TI2FP2 edge depending on TI1FP1 level.
0011: Encoder mode 3 - Counter counts up/down on both TI1FP1 and TI2FP2 edges depending on the level of the other input.
0100: Reset Mode - Rising edge of the selected trigger input (TRGI) reinitializes the counter and generates an update of the registers.
0101: Gated Mode - The counter clock is enabled when the trigger input (TRGI) is high. The counter stops (but is not reset) as soon as the trigger becomes low. Both start and stop of the counter are controlled.
0110: Trigger Mode - The counter starts at a rising edge of the trigger TRGI (but it is not reset). Only the start of the counter is controlled.
0111: External Clock Mode 1 - Rising edges of the selected trigger (TRGI) clock the counter.
1000: Combined reset + trigger mode - Rising edge of the selected trigger input (TRGI) reinitializes the counter, generates an update of the registers and starts the counter.

Note: The gated mode must not be used if TI1F_ED is selected as the trigger input (TS=100). Indeed, TI1F_ED outputs 1 pulse for each transition on TI1F, whereas the gated mode checks the level of the trigger signal.

Note: The clock of the slave peripherals (timer, ADC, ...) receiving the TRGO or the TRGO2 signals must be enabled prior to receive events from the master timer, and the clock frequency (prescaler) must not be changed on-the-fly while triggers are received from the master timer.

Table 202. TIMx internal trigger connection

Slave TIM	ITR0 (TS = 000)	ITR1 (TS = 001)	ITR2 (TS = 010)	ITR3 (TS = 011)
TIM2	TIM1	TIM8/OTG_FS_SOF(1)	TIM3	TIM4
TIM3	TIM1	TIM2	TIM15	TIM4
TIM4	TIM1	TIM2	TIM3	TIM8
TIM5	TIM2	TIM3	TIM4	TIM8

1. Depends on the bit ITR1_RMP in TIM2_OR1 register.

31.4.4 TIMx DMA/Interrupt enable register (TIMx_DIER)(x = 2 to 5)

Address offset: 0x0C

Reset value: 0x0000

15	14	13	12	11	10	9	8	7	6	5	4	3	2	1	0
Res.	TDE	Res.	CC4DE	CC3DE	CC2DE	CC1DE	UDE	Res.	TIE	Res.	CC4IE	CC3IE	CC2IE	CC1IE	UIE
	rw		rw	rw	rw	rw	rw		rw		rw	rw	rw	rw	rw

Bit 15 Reserved, must be kept at reset value.

Bit 14 **TDE**: Trigger DMA request enable
0: Trigger DMA request disabled.
1: Trigger DMA request enabled.

Bit 13 Reserved, must be kept at reset value.

Bit 12 **CC4DE**: Capture/Compare 4 DMA request enable
0: CC4 DMA request disabled.
1: CC4 DMA request enabled.

Bit 11 **CC3DE**: Capture/Compare 3 DMA request enable
0: CC3 DMA request disabled.
1: CC3 DMA request enabled.

Bit 10 **CC2DE**: Capture/Compare 2 DMA request enable
0: CC2 DMA request disabled.
1: CC2 DMA request enabled.

Bit 9 **CC1DE**: Capture/Compare 1 DMA request enable
0: CC1 DMA request disabled.
1: CC1 DMA request enabled.

Bit 8 **UDE**: Update DMA request enable
0: Update DMA request disabled.
1: Update DMA request enabled.

Bit 7 Reserved, must be kept at reset value.

Bit 6 **TIE**: Trigger interrupt enable
0: Trigger interrupt disabled.
1: Trigger interrupt enabled.

Bit 5 Reserved, must be kept at reset value.

Bit 4 **CC4IE**: Capture/Compare 4 interrupt enable
0: CC4 interrupt disabled.
1: CC4 interrupt enabled.

Bit 3 **CC3IE**: Capture/Compare 3 interrupt enable
0: CC3 interrupt disabled.
1: CC3 interrupt enabled.

Bit 2 **CC2IE**: Capture/Compare 2 interrupt enable
0: CC2 interrupt disabled.
1: CC2 interrupt enabled.

Bit 1 **CC1IE**: Capture/Compare 1 interrupt enable
0: CC1 interrupt disabled.
1: CC1 interrupt enabled.

Bit 0 **UIE**: Update interrupt enable
0: Update interrupt disabled.
1: Update interrupt enabled.

31.4.5 TIMx status register (TIMx_SR)(x = 2 to 5)

Address offset: 0x10

Reset value: 0x0000

15	14	13	12	11	10	9	8	7	6	5	4	3	2	1	0
Res.	Res.	Res.	CC4OF	CC3OF	CC2OF	CC1OF	Res.	Res.	TIF	Res.	CC4IF	CC3IF	CC2IF	CC1IF	UIF
			rc_w0	rc_w0	rc_w0	rc_w0			rc_w0		rc_w0	rc_w0	rc_w0	rc_w0	rc_w0

Bits 15:13 Reserved, must be kept at reset value.

Bit 12 **CC4OF**: Capture/Compare 4 overcapture flag
refer to CC1OF description

Bit 11 **CC3OF**: Capture/Compare 3 overcapture flag
refer to CC1OF description

Bit 10 **CC2OF**: Capture/compare 2 overcapture flag
refer to CC1OF description

Bit 9 **CC1OF**: Capture/Compare 1 overcapture flag
This flag is set by hardware only when the corresponding channel is configured in input capture mode. It is cleared by software by writing it to ‘0’.
0: No overcapture has been detected.
1: The counter value has been captured in TIMx_CCR1 register while CC1IF flag was already set

Bits 8:7 Reserved, must be kept at reset value.

Bit 6 **TIF**: Trigger interrupt flag
This flag is set by hardware on the TRG trigger event (active edge detected on TRGI input when the slave mode controller is enabled in all modes but gated mode. It is set when the counter starts or stops when gated mode is selected. It is cleared by software.
0: No trigger event occurred.
1: Trigger interrupt pending.

Bit 5 Reserved, must be kept at reset value.

Bit 4 **CC4IF**: Capture/Compare 4 interrupt flag
Refer to CC1IF description

Bit 3 **CC3IF**: Capture/Compare 3 interrupt flag
Refer to CC1IF description

Bit 2 **CC2IF**: Capture/Compare 2 interrupt flag
Refer to CC1IF description

Bit 1 **CC1IF**: Capture/compare 1 interrupt flag
This flag is set by hardware. It is cleared by software (input capture or output compare mode) or by reading the TIMx_CCR1 register (input capture mode only).
0: No compare match / No input capture occurred
1: A compare match or an input capture occurred
If channel CC1 is configured as output: this flag is set when the content of the counter TIMx_CNT matches the content of the TIMx_CCR1 register. When the content of TIMx_CCR1 is greater than the content of TIMx_ARR, the CC1IF bit goes high on the counter overflow (in up-counting and up/down-counting modes) or underflow (in down-counting mode). There are 3 possible options for flag setting in center-aligned mode, refer to the CMS bits in the TIMx_CR1 register for the full description.
If channel CC1 is configured as input: this bit is set when counter value has been captured in TIMx_CCR1 register (an edge has been detected on IC1, as per the edge sensitivity defined with the CC1P and CC1NP bits setting, in TIMx_CCER).

Bit 0 **UIF**: Update interrupt flag
This bit is set by hardware on an update event. It is cleared by software.
0: No update occurred
1: Update interrupt pending. This bit is set by hardware when the registers are updated:
At overflow or underflow (for TIM2 to TIM4) and if UDIS=0 in the TIMx_CR1 register.
When CNT is reinitialized by software using the UG bit in TIMx_EGR register, if URS=0 and UDIS=0 in the TIMx_CR1 register.
When CNT is reinitialized by a trigger event (refer to the synchro control register description), if URS=0 and UDIS=0 in the TIMx_CR1 register.

31.4.6 TIMx event generation register (TIMx_EGR)(x = 2 to 5)

Address offset: 0x14

Reset value: 0x0000

15	14	13	12	11	10	9	8	7	6	5	4	3	2	1	0
Res.	Res.	Res.	Res.	Res.	Res.	Res.	Res.	Res.	TG	Res.	CC4G	CC3G	CC2G	CC1G	UG
									w		w	w	w	w	w

Bits 15:7 Reserved, must be kept at reset value.

Bit 6 **TG**: Trigger generation
This bit is set by software in order to generate an event, it is automatically cleared by hardware.
0: No action
1: The TIF flag is set in TIMx_SR register. Related interrupt or DMA transfer can occur if enabled.

Bit 5 Reserved, must be kept at reset value.

Bit 4 **CC4G**: Capture/compare 4 generation
Refer to CC1G description

Bit 3 **CC3G**: Capture/compare 3 generation
Refer to CC1G description

Bit 2 **CC2G**: Capture/compare 2 generation
Refer to CC1G description

Bit 1 **CC1G**: Capture/compare 1 generation
This bit is set by software in order to generate an event, it is automatically cleared by hardware.
0: No action
1: A capture/compare event is generated on channel 1:
If channel CC1 is configured as output:
CC1IF flag is set, Corresponding interrupt or DMA request is sent if enabled.
If channel CC1 is configured as input:
The current value of the counter is captured in TIMx_CCR1 register. The CC1IF flag is set, the corresponding interrupt or DMA request is sent if enabled. The CC1OF flag is set if the CC1IF flag was already high.

Bit 0 **UG**: Update generation
This bit can be set by software, it is automatically cleared by hardware.
0: No action
1: Re-initialize the counter and generates an update of the registers. Note that the prescaler counter is cleared too (anyway the prescaler ratio is not affected). The counter is cleared if the center-aligned mode is selected or if DIR=0 (upcounting), else it takes the auto-reload value (TIMx_ARR) if DIR=1 (downcounting).

31.4.7 TIMx capture/compare mode register 1 [alternate] (TIMx_CCMR1) (x = 2 to 5)

Address offset: 0x18

Reset value: 0x0000 0000

The same register can be used for input capture mode (this section) or for output compare mode (next section). The direction of a channel is defined by configuring the corresponding CCxS bits. All the other bits of this register have a different function in input and in output mode.

Input capture mode:

31	30	29	28	27	26	25	24	23	22	21	20	19	18	17	16
Res.	Res.	Res.	Res.	Res.	Res.	Res.	Res.	Res.	Res.	Res.	Res.	Res.	Res.	Res.	Res.

15	14	13	12	11	10	9	8	7	6	5	4	3	2	1	0
IC2F[3:0]				IC2PSC[1:0]		CC2S[1:0]		IC1F[3:0]				IC1PSC[1:0]		CC1S[1:0]	
rw	rw	rw	rw	rw	rw	rw	rw	rw	rw	rw	rw	rw	rw	rw	rw

Bits 31:16 Reserved, must be kept at reset value.

Bits 15:12 **IC2F[3:0]**: Input capture 2 filter

Bits 11:10 **IC2PSC[1:0]**: Input capture 2 prescaler

Bits 9:8 **CC2S[1:0]**: Capture/compare 2 selection

This bit-field defines the direction of the channel (input/output) as well as the used input.

00: CC2 channel is configured as output.

01: CC2 channel is configured as input, IC2 is mapped on TI2.

10: CC2 channel is configured as input, IC2 is mapped on TI1.

11: CC2 channel is configured as input, IC2 is mapped on TRC. This mode is working only if an internal trigger input is selected through TS bit (TIMx_SMCR register)

Note: CC2S bits are writable only when the channel is OFF (CC2E = 0 in TIMx_CCER).

Bits 7:4 **IC1F[3:0]**: Input capture 1 filter

This bit-field defines the frequency used to sample TI1 input and the length of the digital filter applied to TI1. The digital filter is made of an event counter in which N consecutive events are needed to validate a transition on the output:

0000: No filter, sampling is done at f_{DTS}

0001: $f_{SAMPLING}=f_{CK_INT}$, N=2

0010: $f_{SAMPLING}=f_{CK_INT}$, N=4

0011: $f_{SAMPLING}=f_{CK_INT}$, N=8

0100: $f_{SAMPLING}=f_{DTS}/2$, N=6

0101: $f_{SAMPLING}=f_{DTS}/2$, N=8

0110: $f_{SAMPLING}=f_{DTS}/4$, N=6

0111: $f_{SAMPLING}=f_{DTS}/4$, N=8

1000: $f_{SAMPLING}=f_{DTS}/8$, N=6

1001: $f_{SAMPLING}=f_{DTS}/8$, N=8

1010: $f_{SAMPLING}=f_{DTS}/16$, N=5

1011: $f_{SAMPLING}=f_{DTS}/16$, N=6

1100: $f_{SAMPLING}=f_{DTS}/16$, N=8

1101: $f_{SAMPLING}=f_{DTS}/32$, N=5

1110: $f_{SAMPLING}=f_{DTS}/32$, N=6

1111: $f_{SAMPLING}=f_{DTS}/32$, N=8

Bits 3:2 **IC1PSC[1:0]**: Input capture 1 prescaler

This bit-field defines the ratio of the prescaler acting on CC1 input (IC1). The prescaler is reset as soon as CC1E=0 (TIMx_CCER register).

00: no prescaler, capture is done each time an edge is detected on the capture input

01: capture is done once every 2 events

10: capture is done once every 4 events

11: capture is done once every 8 events

Bits 1:0 **CC1S[1:0]**: Capture/Compare 1 selection

This bit-field defines the direction of the channel (input/output) as well as the used input.

00: CC1 channel is configured as output

01: CC1 channel is configured as input, IC1 is mapped on TI1

10: CC1 channel is configured as input, IC1 is mapped on TI2

11: CC1 channel is configured as input, IC1 is mapped on TRC. This mode is working only if an internal trigger input is selected through TS bit (TIMx_SMCR register)

Note: CC1S bits are writable only when the channel is OFF (CC1E = 0 in TIMx_CCER).

31.4.8 TIMx capture/compare mode register 1 [alternate] (TIMx_CCMR1) (x = 2 to 5)

Address offset: 0x18

Reset value: 0x0000 0000

The same register can be used for output compare mode (this section) or for input capture mode (previous section). The direction of a channel is defined by configuring the corresponding CCxS bits. All the other bits of this register have a different function in input and in output mode.

Output compare mode:

31	30	29	28	27	26	25	24	23	22	21	20	19	18	17	16
Res.	Res.	Res.	Res.	Res.	Res.	Res.	OC2M [3]	Res.	Res.	Res.	Res.	Res.	Res.	Res.	OC1M [3]
							rw								rw

15	14	13	12	11	10	9	8	7	6	5	4	3	2	1	0
OC2CE	OC2M[2:0]			OC2PE	OC2FE	CC2S[1:0]		OC1CE	OC1M[2:0]			OC1PE	OC1FE	CC1S[1:0]	
rw	rw	rw	rw	rw	rw	rw	rw	rw	rw	rw	rw	rw	rw	rw	rw

Bits 31:25 Reserved, must be kept at reset value.

Bits 23:17 Reserved, must be kept at reset value.

Bit 15 **OC2CE**: Output compare 2 clear enable

Bits 24, 14:12 **OC2M[3:0]**: Output compare 2 mode
refer to OC1M description on bits 6:4

Bit 11 **OC2PE**: Output compare 2 preload enable

Bit 10 **OC2FE**: Output compare 2 fast enable

Bits 9:8 **CC2S[1:0]**: Capture/Compare 2 selection
This bit-field defines the direction of the channel (input/output) as well as the used input.
00: CC2 channel is configured as output
01: CC2 channel is configured as input, IC2 is mapped on TI2
10: CC2 channel is configured as input, IC2 is mapped on TI1
11: CC2 channel is configured as input, IC2 is mapped on TRC. This mode is working only if an internal trigger input is selected through the TS bit (TIMx_SMCR register)

Note: CC2S bits are writable only when the channel is OFF (CC2E = 0 in TIMx_CCER).

Bit 7 **OC1CE**: Output compare 1 clear enable
0: OC1Ref is not affected by the ETRF input
1: OC1Ref is cleared as soon as a High level is detected on ETRF input

Bits 16, 6:4 **OC1M[3:0]**: Output compare 1 mode

These bits define the behavior of the output reference signal OC1REF from which OC1 and OC1N are derived. OC1REF is active high whereas OC1 and OC1N active level depends on CC1P and CC1NP bits.

0000: Frozen - The comparison between the output compare register TIMx_CCR1 and the counter TIMx_CNT has no effect on the outputs.(this mode is used to generate a timing base).

0001: Set channel 1 to active level on match. OC1REF signal is forced high when the counter TIMx_CNT matches the capture/compare register 1 (TIMx_CCR1).

0010: Set channel 1 to inactive level on match. OC1REF signal is forced low when the counter TIMx_CNT matches the capture/compare register 1 (TIMx_CCR1).

0011: Toggle - OC1REF toggles when TIMx_CNT=TIMx_CCR1.

0100: Force inactive level - OC1REF is forced low.

0101: Force active level - OC1REF is forced high.

0110: PWM mode 1 - In upcounting, channel 1 is active as long as TIMx_CNT<TIMx_CCR1 else inactive. In downcounting, channel 1 is inactive (OC1REF=‘0) as long as TIMx_CNT>TIMx_CCR1 else active (OC1REF=1).

0111: PWM mode 2 - In upcounting, channel 1 is inactive as long as TIMx_CNT<TIMx_CCR1 else active. In downcounting, channel 1 is active as long as TIMx_CNT>TIMx_CCR1 else inactive.

1000: Retriggerable OPM mode 1 - In up-counting mode, the channel is active until a trigger event is detected (on TRGI signal). Then, a comparison is performed as in PWM mode 1 and the channels becomes inactive again at the next update. In down-counting mode, the channel is inactive until a trigger event is detected (on TRGI signal). Then, a comparison is performed as in PWM mode 1 and the channels becomes inactive again at the next update.

1001: Retriggerable OPM mode 2 - In up-counting mode, the channel is inactive until a trigger event is detected (on TRGI signal). Then, a comparison is performed as in PWM mode 2 and the channels becomes inactive again at the next update. In down-counting mode, the channel is active until a trigger event is detected (on TRGI signal). Then, a comparison is performed as in PWM mode 1 and the channels becomes active again at the next update.

1010: Reserved,

1011: Reserved,

1100: Combined PWM mode 1 - OC1REF has the same behavior as in PWM mode 1. OC1REFC is the logical OR between OC1REF and OC2REF.

1101: Combined PWM mode 2 - OC1REF has the same behavior as in PWM mode 2. OC1REFC is the logical AND between OC1REF and OC2REF.

1110: Asymmetric PWM mode 1 - OC1REF has the same behavior as in PWM mode 1. OC1REFC outputs OC1REF when the counter is counting up, OC2REF when it is counting down.

1111: Asymmetric PWM mode 2 - OC1REF has the same behavior as in PWM mode 2. OC1REFC outputs OC1REF when the counter is counting up, OC2REF when it is counting down.

Note: In PWM mode, the OCREF level changes only when the result of the comparison changes or when the output compare mode switches from “frozen” mode to “PWM” mode.

Bit 3 **OC1PE**: Output compare 1 preload enable

0: Preload register on TIMx_CCR1 disabled. TIMx_CCR1 can be written at anytime, the new value is taken in account immediately.
1: Preload register on TIMx_CCR1 enabled. Read/Write operations access the preload register. TIMx_CCR1 preload value is loaded in the active register at each update event.

Note: The PWM mode can be used without validating the preload register only in one-pulse mode (OPM bit set in TIMx_CR1 register). Else the behavior is not guaranteed.

Bit 2 **OC1FE**: Output compare 1 fast enable

This bit is used to accelerate the effect of an event on the trigger in input on the CC output.
0: CC1 behaves normally depending on counter and CCR1 values even when the trigger is ON. The minimum delay to activate CC1 output when an edge occurs on the trigger input is 5 clock cycles.
1: An active edge on the trigger input acts like a compare match on CC1 output. Then, OC is set to the compare level independently from the result of the comparison. Delay to sample the trigger input and to activate CC1 output is reduced to 3 clock cycles. OCFE acts only if the channel is configured in PWM1 or PWM2 mode.

Bits 1:0 **CC1S[1:0]**: Capture/Compare 1 selection

This bit-field defines the direction of the channel (input/output) as well as the used input.
00: CC1 channel is configured as output.
01: CC1 channel is configured as input, IC1 is mapped on TI1.
10: CC1 channel is configured as input, IC1 is mapped on TI2.
11: CC1 channel is configured as input, IC1 is mapped on TRC. This mode is working only if an internal trigger input is selected through TS bit (TIMx_SMCR register)

Note: CC1S bits are writable only when the channel is OFF (CC1E = 0 in TIMx_CCER).

31.4.9 TIMx capture/compare mode register 2 [alternate] (TIMx_CCMR2) (x = 2 to 5)

Address offset: 0x1C

Reset value: 0x0000 0000

The same register can be used for input capture mode (this section) or for output compare mode (next section). The direction of a channel is defined by configuring the corresponding CCxS bits. All the other bits of this register have a different function in input and in output mode.

Input capture mode:

31	30	29	28	27	26	25	24	23	22	21	20	19	18	17	16
Res.	Res.	Res.	Res.	Res.	Res.	Res.	Res.	Res.	Res.	Res.	Res.	Res.	Res.	Res.	Res.

15	14	13	12	11	10	9	8	7	6	5	4	3	2	1	0
IC4F[3:0]				IC4PSC[1:0]		CC4S[1:0]		IC3F[3:0]				IC3PSC[1:0]		CC3S[1:0]	
rw	rw	rw	rw	rw	rw	rw	rw	rw	rw	rw	rw	rw	rw	rw	rw

Bits 31:16 Reserved, must be kept at reset value.

Bits 15:12 **IC4F[3:0]**: Input capture 4 filter

Bits 11:10 **IC4PSC[1:0]**: Input capture 4 prescaler

Bits 9:8 **CC4S[1:0]**: Capture/Compare 4 selection

This bit-field defines the direction of the channel (input/output) as well as the used input.
00: CC4 channel is configured as output
01: CC4 channel is configured as input, IC4 is mapped on TI4
10: CC4 channel is configured as input, IC4 is mapped on TI3
11: CC4 channel is configured as input, IC4 is mapped on TRC. This mode is working only if an internal trigger input is selected through TS bit (TIMx_SMCR register)

Note: CC4S bits are writable only when the channel is OFF (CC4E = 0 in TIMx_CCER).

Bits 7:4 **IC3F[3:0]**: Input capture 3 filter

Bits 3:2 **IC3PSC[1:0]**: Input capture 3 prescaler

Bits 1:0 **CC3S[1:0]**: Capture/Compare 3 selection

This bit-field defines the direction of the channel (input/output) as well as the used input.
00: CC3 channel is configured as output
01: CC3 channel is configured as input, IC3 is mapped on TI3
10: CC3 channel is configured as input, IC3 is mapped on TI4
11: CC3 channel is configured as input, IC3 is mapped on TRC. This mode is working only if an internal trigger input is selected through TS bit (TIMx_SMCR register)

Note: CC3S bits are writable only when the channel is OFF (CC3E = 0 in TIMx_CCER).

31.4.10 TIMx capture/compare mode register 2 [alternate] (TIMx_CCMR2) (x = 2 to 5)

Address offset: 0x1C

Reset value: 0x0000 0000

The same register can be used for output compare mode (this section) or for input capture mode (previous section). The direction of a channel is defined by configuring the corresponding CCxS bits. All the other bits of this register have a different function in input and in output mode.

Output compare mode:

31	30	29	28	27	26	25	24	23	22	21	20	19	18	17	16
Res.	Res.	Res.	Res.	Res.	Res.	Res.	OC4M [3]	Res.	Res.	Res.	Res.	Res.	Res.	Res.	OC3M [3]
							rw								rw

15	14	13	12	11	10	9	8	7	6	5	4	3	2	1	0
OC4CE	OC4M[2:0]			OC4PE	OC4FE	CC4S[1:0]		OC3CE	OC3M[2:0]			OC3PE	OC3FE	CC3S[1:0]	
rw	rw	rw	rw	rw	rw	rw	rw	rw	rw	rw	rw	rw	rw	rw	rw

Bits 31:25 Reserved, must be kept at reset value.

Bits 23:17 Reserved, must be kept at reset value.

Bit 15 **OC4CE**: Output compare 4 clear enable

Bits 24, 14:12 **OC4M[3:0]**: Output compare 4 mode

Refer to OC1M description (bits 6:4 in TIMx_CCMR1 register)

Bit 11 **OC4PE**: Output compare 4 preload enable

Bit 10 **OC4FE**: Output compare 4 fast enable

Bits 9:8 **CC4S[1:0]**: Capture/Compare 4 selection
This bit-field defines the direction of the channel (input/output) as well as the used input.
00: CC4 channel is configured as output
01: CC4 channel is configured as input, IC4 is mapped on TI4
10: CC4 channel is configured as input, IC4 is mapped on TI3
11: CC4 channel is configured as input, IC4 is mapped on TRC. This mode is working only if an internal trigger input is selected through TS bit (TIMx_SMCR register)
Note: CC4S bits are writable only when the channel is OFF (CC4E = 0 in TIMx_CCER).

Bit 7 **OC3CE**: Output compare 3 clear enable

Bits 16, 6:4 **OC3M[3:0]**: Output compare 3 mode
Refer to OC1M description (bits 6:4 in TIMx_CCMR1 register)

Bit 3 **OC3PE**: Output compare 3 preload enable

Bit 2 **OC3FE**: Output compare 3 fast enable

Bits 1:0 **CC3S[1:0]**: Capture/Compare 3 selection
This bit-field defines the direction of the channel (input/output) as well as the used input.
00: CC3 channel is configured as output
01: CC3 channel is configured as input, IC3 is mapped on TI3
10: CC3 channel is configured as input, IC3 is mapped on TI4
11: CC3 channel is configured as input, IC3 is mapped on TRC. This mode is working only if an internal trigger input is selected through TS bit (TIMx_SMCR register)
Note: CC3S bits are writable only when the channel is OFF (CC3E = 0 in TIMx_CCER).

31.4.11 TIMx capture/compare enable register (TIMx_CCER)(x = 2 to 5)

Address offset: 0x20

Reset value: 0x0000

15	14	13	12	11	10	9	8	7	6	5	4	3	2	1	0
CC4NP	Res.	CC4P	CC4E	CC3NP	Res.	CC3P	CC3E	CC2NP	Res.	CC2P	CC2E	CC1NP	Res.	CC1P	CC1E
rw		rw	rw	rw		rw	rw	rw		rw	rw	rw		rw	rw

Bit 15 **CC4NP**: *Capture/Compare 4 output Polarity.*
Refer to CC1NP description

Bit 14 Reserved, must be kept at reset value.

Bit 13 **CC4P**: *Capture/Compare 4 output Polarity.*
Refer to CC1P description

Bit 12 **CC4E**: *Capture/Compare 4 output enable.*
refer to CC1E description

Bit 11 **CC3NP**: *Capture/Compare 3 output Polarity.*
Refer to CC1NP description

Bit 10 Reserved, must be kept at reset value.

Bit 9 **CC3P**: *Capture/Compare 3 output Polarity.*
Refer to CC1P description

Bit 8 **CC3E**: *Capture/Compare 3 output enable.*
Refer to CC1E description

Bit 7 **CC2NP**: *Capture/Compare 2 output Polarity.*
Refer to CC1NP description

Bit 6 Reserved, must be kept at reset value.

Bit 5 **CC2P**: *Capture/Compare 2 output Polarity.*
refer to CC1P description

Bit 4 **CC2E**: *Capture/Compare 2 output enable.*
Refer to CC1E description

Bit 3 **CC1NP**: *Capture/Compare 1 output Polarity.*
CC1 channel configured as output: CC1NP must be kept cleared in this case.
CC1 channel configured as input: This bit is used in conjunction with CC1P to define TI1FP1/TI2FP1 polarity. refer to CC1P description.

Bit 2 Reserved, must be kept at reset value.

Bit 1 **CC1P**: *Capture/Compare 1 output Polarity.*
0: OC1 active high (output mode) / Edge sensitivity selection (input mode, see below)
1: OC1 active low (output mode) / Edge sensitivity selection (input mode, see below)
When CC1 channel is configured as input, both CC1NP/CC1P bits select the active polarity of TI1FP1 and TI2FP1 for trigger or capture operations.
CC1NP=0, CC1P=0: non-inverted/rising edge. The circuit is sensitive to TIxFP1 rising edge (capture or trigger operations in reset, external clock or trigger mode), TIxFP1 is not inverted (trigger operation in gated mode or encoder mode).
CC1NP=0, CC1P=1: inverted/falling edge. The circuit is sensitive to TIxFP1 falling edge (capture or trigger operations in reset, external clock or trigger mode), TIxFP1 is inverted (trigger operation in gated mode or encoder mode).
CC1NP=1, CC1P=1: non-inverted/both edges. The circuit is sensitive to both TIxFP1 rising and falling edges (capture or trigger operations in reset, external clock or trigger mode), TIxFP1is not inverted (trigger operation in gated mode). This configuration must not be used in encoder mode.
CC1NP=1, CC1P=0: This configuration is reserved, it must not be used.

Bit 0 **CC1E**: *Capture/Compare 1 output enable.*
0: Capture mode disabled / OC1 is not active
1: Capture mode enabled / OC1 signal is output on the corresponding output pin

Table 203. Output control bit for standard OCx channels

CCxE bit	OCx output state
0	Output Disabled (OCx=0, OCx_EN=0)
1	OCx=OCxREF + Polarity, OCx_EN=1

Note: The state of the external IO pins connected to the standard OCx channels depends on the OCx channel state and the GPIO and AFIO registers.

31.4.12 TIMx counter [alternate] (TIMx_CNT)(x = 2 to 5)

Bit 31 of this register has two possible definitions depending on the value of UIFREMAP in TIMx_CR1 register:

- This section is for UIFREMAP = 0
- Next section is for UIFREMAP = 1

Address offset: 0x24

Reset value: 0x0000 0000

31	30	29	28	27	26	25	24	23	22	21	20	19	18	17	16
CNT[31:16]															
rw	rw	rw	rw	rw	rw	rw	rw	rw	rw	rw	rw	rw	rw	rw	rw
15	14	13	12	11	10	9	8	7	6	5	4	3	2	1	0
CNT[15:0]															
rw	rw	rw	rw	rw	rw	rw	rw	rw	rw	rw	rw	rw	rw	rw	rw

Bits 31:16 **CNT[31:16]**: Most significant part counter value (TIM2 and TIM5)

Bits 15:0 **CNT[15:0]**: Least significant part of counter value

31.4.13 TIMx counter [alternate] (TIMx_CNT)(x = 2 to 5)

Bit 31 of this register has two possible definitions depending on the value of UIFREMAP in TIMx_CR1 register:

- Previous section is for UIFREMAP = 0
- This section is for UIFREMAP = 1

Address offset: 0x24

Reset value: 0x0000 0000

31	30	29	28	27	26	25	24	23	22	21	20	19	18	17	16
UIFCPY	CNT[30:16]														
rw	rw	rw	rw	rw	rw	rw	rw	rw	rw	rw	rw	rw	rw	rw	rw
15	14	13	12	11	10	9	8	7	6	5	4	3	2	1	0
CNT[15:0]															
rw	rw	rw	rw	rw	rw	rw	rw	rw	rw	rw	rw	rw	rw	rw	rw

Bit 31 **UIFCPY**: UIF Copy

This bit is a read-only copy of the UIF bit of the TIMx_ISR register

Bits 30:16 **CNT[30:16]**: Most significant part counter value (TIM2 and TIM5)

Bits 15:0 **CNT[15:0]**: Least significant part of counter value

31.4.14 TIMx prescaler (TIMx_PSC)(x = 2 to 5)

Address offset: 0x28

Reset value: 0x0000

15	14	13	12	11	10	9	8	7	6	5	4	3	2	1	0
PSC[15:0]															
rw	rw	rw	rw	rw	rw	rw	rw	rw	rw	rw	rw	rw	rw	rw	rw

Bits 15:0 **PSC[15:0]**: Prescaler value

The counter clock frequency CK_CNT is equal to f_{CK_PSC} / (PSC[15:0] + 1).
PSC contains the value to be loaded in the active prescaler register at each update event (including when the counter is cleared through UG bit of TIMx_EGR register or through trigger controller when configured in “reset mode”).

31.4.15 TIMx auto-reload register (TIMx_ARR)(x = 2 to 5)

Address offset: 0x2C

Reset value: 0xFFFF FFFF

31	30	29	28	27	26	25	24	23	22	21	20	19	18	17	16
ARR[31:16]															
rw	rw	rw	rw	rw	rw	rw	rw	rw	rw	rw	rw	rw	rw	rw	rw
15	14	13	12	11	10	9	8	7	6	5	4	3	2	1	0
ARR[15:0]															
rw	rw	rw	rw	rw	rw	rw	rw	rw	rw	rw	rw	rw	rw	rw	rw

Bits 31:16 **ARR[31:16]**: High auto-reload value (TIM2 and TIM5)

Bits 15:0 **ARR[15:0]**: Low Auto-reload value

ARR is the value to be loaded in the actual auto-reload register.
Refer to the *Section 31.3.1: Time-base unit on page 1016* for more details about ARR update and behavior.
The counter is blocked while the auto-reload value is null.

31.4.16 TIMx capture/compare register 1 (TIMx_CCR1)(x = 2 to 5)

Address offset: 0x34

Reset value: 0x0000 0000

31	30	29	28	27	26	25	24	23	22	21	20	19	18	17	16
CCR1[31:16]															
rw	rw	rw	rw	rw	rw	rw	rw	rw	rw	rw	rw	rw	rw	rw	rw
15	14	13	12	11	10	9	8	7	6	5	4	3	2	1	0
CCR1[15:0]															
rw	rw	rw	rw	rw	rw	rw	rw	rw	rw	rw	rw	rw	rw	rw	rw

Bits 31:16 **CCR1[31:16]**: High Capture/Compare 1 value (TIM2 and TIM5)

Bits 15:0 **CCR1[15:0]**: Low Capture/Compare 1 value

If channel CC1 is configured as output:
CCR1 is the value to be loaded in the actual capture/compare 1 register (preload value).
It is loaded permanently if the preload feature is not selected in the TIMx_CCMR1 register (bit OC1PE). Else the preload value is copied in the active capture/compare 1 register when an update event occurs.
The active capture/compare register contains the value to be compared to the counter TIMx_CNT and signaled on OC1 output.

If channel CC1is configured as input:
CCR1 is the counter value transferred by the last input capture 1 event (IC1). The TIMx_CCR1 register is read-only and cannot be programmed.

31.4.17 TIMx capture/compare register 2 (TIMx_CCR2)(x = 2 to 5)

Address offset: 0x38

Reset value: 0x0000 0000

31	30	29	28	27	26	25	24	23	22	21	20	19	18	17	16
CCR2[31:16]															
rw	rw	rw	rw	rw	rw	rw	rw	rw	rw	rw	rw	rw	rw	rw	rw
15	14	13	12	11	10	9	8	7	6	5	4	3	2	1	0
CCR2[15:0]															
rw	rw	rw	rw	rw	rw	rw	rw	rw	rw	rw	rw	rw	rw	rw	rw

Bits 31:16 **CCR2[31:16]**: High Capture/Compare 2 value (TIM2 and TIM5)

Bits 15:0 **CCR2[15:0]**: Low Capture/Compare 2 value

If channel CC2 is configured as output:
CCR2 is the value to be loaded in the actual capture/compare 2 register (preload value).
It is loaded permanently if the preload feature is not selected in the TIMx_CCMR1 register (bit OC2PE). Else the preload value is copied in the active capture/compare 2 register when an update event occurs.
The active capture/compare register contains the value to be compared to the counter TIMx_CNT and signalled on OC2 output.
If channel CC2 is configured as input:
CCR2 is the counter value transferred by the last input capture 2 event (IC2). The TIMx_CCR2 register is read-only and cannot be programmed.

31.4.18 TIMx capture/compare register 3 (TIMx_CCR3)(x = 2 to 5)

Address offset: 0x3C

Reset value: 0x0000 0000

31	30	29	28	27	26	25	24	23	22	21	20	19	18	17	16
CCR3[31:16]															
rw	rw	rw	rw	rw	rw	rw	rw	rw	rw	rw	rw	rw	rw	rw	rw
15	14	13	12	11	10	9	8	7	6	5	4	3	2	1	0
CCR3[15:0]															
rw	rw	rw	rw	rw	rw	rw	rw	rw	rw	rw	rw	rw	rw	rw	rw

Bits 31:16 **CCR3[31:16]**: High Capture/Compare 3 value (TIM2 and TIM5)

Bits 15:0 **CCR3[15:0]**: Low Capture/Compare value

If channel CC3 is configured as output:
CCR3 is the value to be loaded in the actual capture/compare 3 register (preload value).
It is loaded permanently if the preload feature is not selected in the TIMx_CCMR2 register (bit OC3PE). Else the preload value is copied in the active capture/compare 3 register when an update event occurs.
The active capture/compare register contains the value to be compared to the counter TIMx_CNT and signalled on OC3 output.
If channel CC3is configured as input:
CCR3 is the counter value transferred by the last input capture 3 event (IC3). The TIMx_CCR3 register is read-only and cannot be programmed.

31.4.19 TIMx capture/compare register 4 (TIMx_CCR4)(x = 2 to 5)

Address offset: 0x40

Reset value: 0x0000 0000

31	30	29	28	27	26	25	24	23	22	21	20	19	18	17	16
CCR4[31:16]															
rw	rw	rw	rw	rw	rw	rw	rw	rw	rw	rw	rw	rw	rw	rw	rw
15	14	13	12	11	10	9	8	7	6	5	4	3	2	1	0
CCR4[15:0]															
rw	rw	rw	rw	rw	rw	rw	rw	rw	rw	rw	rw	rw	rw	rw	rw

Bits 31:16 **CCR4[31:16]**: High Capture/Compare 4 value (TIM2 and TIM5)

Bits 15:0 **CCR4[15:0]**: Low Capture/Compare value

1. if CC4 channel is configured as output (CC4S bits):
   CCR4 is the value to be loaded in the actual capture/compare 4 register (preload value).
   It is loaded permanently if the preload feature is not selected in the TIMx_CCMR2 register (bit OC4PE). Else the preload value is copied in the active capture/compare 4 register when an update event occurs.
   The active capture/compare register contains the value to be compared to the counter TIMx_CNT and signalled on OC4 output.
2. if CC4 channel is configured as input (CC4S bits in TIMx_CCMR4 register):
   CCR4 is the counter value transferred by the last input capture 4 event (IC4). The TIMx_CCR4 register is read-only and cannot be programmed.

31.4.20 TIMx DMA control register (TIMx_DCR)(x = 2 to 5)

Address offset: 0x48

Reset value: 0x0000

15	14	13	12	11	10	9	8	7	6	5	4	3	2	1	0
Res.	Res.	Res.	DBL[4:0]					Res.	Res.	Res.	DBA[4:0]				
			rw	rw	rw	rw	rw				rw	rw	rw	rw	rw

Bits 15:13 Reserved, must be kept at reset value.

Bits 12:8 **DBL[4:0]**: DMA burst length

This 5-bit vector defines the number of DMA transfers (the timer recognizes a burst transfer when a read or a write access is done to the TIMx_DMAR address).
00000: 1 transfer,
00001: 2 transfers,
00010: 3 transfers,
...
10001: 18 transfers.

Bits 7:5 Reserved, must be kept at reset value.

Bits 4:0 **DBA[4:0]**: DMA base address

This 5-bit vector defines the base-address for DMA transfers (when read/write access are done through the TIMx_DMAR address). DBA is defined as an offset starting from the address of the TIMx_CR1 register.
Example:
00000: TIMx_CR1
00001: TIMx_CR2
00010: TIMx_SMCR
...
Example: Let us consider the following transfer: DBL = 7 transfers & DBA = TIMx_CR1. In this case the transfer is done to/from 7 registers starting from the TIMx_CR1 address.

31.4.21 TIMx DMA address for full transfer (TIMx_DMAR)(x = 2 to 5)

Address offset: 0x4C

Reset value: 0x0000

15	14	13	12	11	10	9	8	7	6	5	4	3	2	1	0
DMAB[15:0]															
rw	rw	rw	rw	rw	rw	rw	rw	rw	rw	rw	rw	rw	rw	rw	rw

Bits 15:0 **DMAB[15:0]**: DMA register for burst accesses

A read or write operation to the DMAR register accesses the register located at the address

(TIMx_CR1 address) + (DBA + DMA index) x 4

where TIMx_CR1 address is the address of the control register 1, DBA is the DMA base address configured in TIMx_DCR register, DMA index is automatically controlled by the DMA transfer, and ranges from 0 to DBL (DBL configured in TIMx_DCR).

31.4.22 TIM2 option register 1 (TIM2_OR1)

Address offset: 0x50

Reset value: 0x0000 0000

31	30	29	28	27	26	25	24	23	22	21	20	19	18	17	16
Res.	Res.	Res.	Res.	Res.	Res.	Res.	Res.	Res.	Res.	Res.	Res.	Res.	Res.	Res.	Res.
15	14	13	12	11	10	9	8	7	6	5	4	3	2	1	0
Res.	Res.	Res.	Res.	Res.	Res.	Res.	Res.	Res.	Res.	Res.	Res.	TI4_RMP[1:0]		ETR_ RMP	ITR1_ RMP
												rw	rw	rw	rw

Bits 31:4 Reserved, must be kept at reset value.

Bits 3:2 **TI4_RMP[1:0]**: Input Capture 4 remap
00: TIM2 input capture 4 is connected to I/O
01: TIM2 input capture 4 is connected to COMP1_OUT
10: TIM2 input capture 4 is connected to COMP2_OUT
11: TIM2 input capture 4 is connected to logical OR between COMP1_OUT and COMP2_OUT

Bit 1 **ETR_RMP**: External trigger remap
0: TIM2_ETR is connected to I/O
1: TIM2_ETR is connected to LSE

Bit 0 **ITR1_RMP**: Internal trigger 1 remap
0: TIM2_ITR1 is connected to TIM8_TRGO
1: TIM2_ITR1 is connected to OTG_FS_SOF
Note: This bit is reserved on STM32L471 devices.

31.4.23 TIM3 option register 1 (TIM3_OR1)

Address offset: 0x50

Reset value: 0x0000 0000

31	30	29	28	27	26	25	24	23	22	21	20	19	18	17	16
Res.	Res.	Res.	Res.	Res.	Res.	Res.	Res.	Res.	Res.	Res.	Res.	Res.	Res.	Res.	Res.
15	14	13	12	11	10	9	8	7	6	5	4	3	2	1	0
Res.	Res.	Res.	Res.	Res.	Res.	Res.	Res.	Res.	Res.	Res.	Res.	Res.	Res.	TI1_RMP[1:0]	
														rw	rw

Bits 31:2 Reserved, must be kept at reset value.

Bits 1:0 **TI1_RMP[1:0]**: Input Capture 1 remap
00: TIM3 input capture 1 is connected to I/O
01: TIM3 input capture 1 is connected to COMP1_OUT
10: TIM3 input capture 1 is connected to COMP2_OUT
11: TIM3 input capture 1 is connected to logical OR between COMP1_OUT and COMP2_OUT

31.4.24 TIM2 option register 2 (TIM2_OR2)

Address offset: 0x60

Reset value: 0x0000 0000

31	30	29	28	27	26	25	24	23	22	21	20	19	18	17	16
Res.	Res.	Res.	Res.	Res.	Res.	Res.	Res.	Res.	Res.	Res.	Res.	Res.	Res.	Res.	ETR SEL2
															rw
15	14	13	12	11	10	9	8	7	6	5	4	3	2	1	0
ETRSEL[1:0]		Res.	Res.	Res.	Res.	Res.	Res.	Res.	Res.	Res.	Res.	Res.	Res.	Res.	Res.
rw	rw														

Bits 31:17 Reserved, must be kept at reset value.

Bits 16:14 **ETRSEL[2:0]**: ETR source selection
These bits select the ETR input source.
000: TIM2_ETR source is selected with the ETR_RMP bitfield in TIM2_OR1 register
001: COMP1 output connected to ETR input
010: COMP2 output connected to ETR input
Others: Reserved

Bits 13:0 Reserved, must be kept at reset value.

31.4.25 TIM3 option register 2 (TIM3_OR2)

Address offset: 0x60

Reset value: 0x0000 0000

31	30	29	28	27	26	25	24	23	22	21	20	19	18	17	16
Res.	Res.	Res.	Res.	Res.	Res.	Res.	Res.	Res.	Res.	Res.	Res.	Res.	Res.	Res.	ETR SEL2
															rw
15	14	13	12	11	10	9	8	7	6	5	4	3	2	1	0
ETRSEL[1:0]		Res.	Res.	Res.	Res.	Res.	Res.	Res.	Res.	Res.	Res.	Res.	Res.	Res.	Res.
rw	rw														

Bits 31:17 Reserved, must be kept at reset value.

Bits 16:14 **ETRSEL[2:0]**: ETR source selection
These bits select the ETR input source.
000: ETR input is connected to I/O
001: COMP1 output connected to ETR input
Others: Reserved

Bits 13:0 Reserved, must be kept at reset value.

31.4.26 TIMx register map

TIMx registers are mapped as described in the table below:

Table 204. TIM2/TIM3/TIM4/TIM5 register map and reset values

Offset	Register name	31	30	29	28	27	26	25	24	23	22	21	20	19	18	17	16	15	14	13	12	11	10	9	8	7	6	5	4	3	2	1	0
0x00	**TIMx_CR1**	Res.	Res.	Res.	Res.	Res.	Res.	Res.	Res.	Res.	Res.	Res.	Res.	Res.	Res.	Res.	Res.	Res.	Res.	Res.	Res.	UIFREMA	Res.	CKD [1:0]		ARPE	CMS [1:0]		DIR	OPM	URS	UDIS	CEN
	Reset value																					0		0	0	0	0	0	0	0	0	0	0
0x04	**TIMx_CR2**	Res.	Res.	Res.	Res.	Res.	Res.	Res.	Res.	Res.	Res.	Res.	Res.	Res.	Res.	Res.	Res.	Res.	Res.	Res.	Res.	Res.	Res.	Res.	Res.	TI1S	MMS[2:0]			CCDS	Res.	Res.	Res.
	Reset value																									0	0	0	0	0			
0x08	**TIMx_SMCR**	Res.	Res.	Res.	Res.	Res.	Res.	Res.	Res.	Res.	Res.	Res.	Res.	Res.	Res.	Res.	SMS[3]	ETP	ECE	ETPS [1:0]		ETF[3:0]				MSM	TS[2:0]			OCCS	SMS[2:0]		
	Reset value																0	0	0	0	0	0	0	0	0	0	0	0	0	0	0	0	0
0x0C	**TIMx_DIER**	Res.	Res.	Res.	Res.	Res.	Res.	Res.	Res.	Res.	Res.	Res.	Res.	Res.	Res.	Res.	Res.	Res.	TDE	Res.	CC4DE	CC3DE	CC2DE	CC1DE	UDE	Res.	TIE	Res.	CC4IE	CC3IE	CC2IE	CC1IE	UIE
	Reset value																		0		0	0	0	0	0		0		0	0	0	0	0
0x10	**TIMx_SR**	Res.	Res.	Res.	Res.	Res.	Res.	Res.	Res.	Res.	Res.	Res.	Res.	Res.	Res.	Res.	Res.	Res.	Res.	Res.	CC4OF	CC3OF	CC2OF	CC1OF	Res.	Res.	TIF	Res.	CC4IF	CC3IF	CC2IF	CC1IF	UIF
	Reset value																				0	0	0	0			0		0	0	0	0	0
0x14	**TIMx_EGR**	Res.	Res.	Res.	Res.	Res.	Res.	Res.	Res.	Res.	Res.	Res.	Res.	Res.	Res.	Res.	Res.	Res.	Res.	Res.	Res.	Res.	Res.	Res.	Res.	Res.	TG	Res.	CC4G	CC3G	CC2G	CC1G	UG
	Reset value																										0		0	0	0	0	0
0x18	**TIMx_CCMR1** Output Compare mode	Res.	Res.	Res.	Res.	Res.	Res.	Res.	OC2M[3]	Res.	Res.	Res.	Res.	Res.	Res.	Res.	OC1M[3]	OC2CE	OC2M [2:0]			OC2PE	OC2FE	CC2S [1:0]		OC1CE	OC1M [2:0]			OC1PE	OC1FE	CC1S [1:0]	
	Reset value								0								0	0	0	0	0	0	0	0	0	0	0	0	0	0	0	0	0
	TIMx_CCMR1 Input Capture mode	Res.	Res.	Res.	Res.	Res.	Res.	Res.	Res.	Res.	Res.	Res.	Res.	Res.	Res.	Res.	Res.	IC2F[3:0]				IC2 PSC [1:0]		CC2S [1:0]		IC1F[3:0]				IC1 PSC [1:0]		CC1S [1:0]	
	Reset value																	0	0	0	0	0	0	0	0	0	0	0	0	0	0	0	0
0x1C	**TIMx_CCMR2** Output Compare mode	Res.	Res.	Res.	Res.	Res.	Res.	Res.	OC4M[3]	Res.	Res.	Res.	Res.	Res.	Res.	Res.	OC3M[3]	O24CE	OC4M [2:0]			OC4PE	OC4FE	CC4S [1:0]		OC3CE	OC3M [2:0]			OC3PE	OC3FE	CC3S [1:0]	
	Reset value								0								0	0	0	0	0	0	0	0	0	0	0	0	0	0	0	0	0
	TIMx_CCMR2 Input Capture mode	Res.	Res.	Res.	Res.	Res.	Res.	Res.	Res.	Res.	Res.	Res.	Res.	Res.	Res.	Res.	Res.	IC4F[3:0]				IC4 PSC [1:0]		CC4S [1:0]		IC3F[3:0]				IC3 PSC [1:0]		CC3S [1:0]	
	Reset value																	0	0	0	0	0	0	0	0	0	0	0	0	0	0	0	0
0x20	**TIMx_CCER**	Res.	Res.	Res.	Res.	Res.	Res.	Res.	Res.	Res.	Res.	Res.	Res.	Res.	Res.	Res.	Res.	CC4NP	Res.	CC4P	CC4E	CC3NP	Res.	CC3P	CC3E	CC2NP	Res.	CC2P	CC2E	CC1NP	Res.	CC1P	CC1E
	Reset value																	0		0	0	0		0	0	0		0	0	0		0	0

Table 204. TIM2/TIM3/TIM4/TIM5 register map and reset values (continued)

Offset	Register name	31	30	29	28	27	26	25	24	23	22	21	20	19	18	17	16	15	14	13	12	11	10	9	8	7	6	5	4	3	2	1	0
0x24	TIMx_CNT	CNT[31] or UIFCPY	CNT[30:16] (TIM2 and TIM5 only, reserved on the other timers)															CNT[15:0]															
	Reset value	0	0	0	0	0	0	0	0	0	0	0	0	0	0	0	0	0	0	0	0	0	0	0	0	0	0	0	0	0	0	0	0
0x28	TIMx_PSC	Res.	Res.	Res.	Res.	Res.	Res.	Res.	Res.	Res.	Res.	Res.	Res.	Res.	Res.	Res.	Res.	PSC[15:0]															
	Reset value																	0	0	0	0	0	0	0	0	0	0	0	0	0	0	0	0
0x2C	TIMx_ARR	ARR[31:16] (TIM2 and TIM5 only, reserved on the other timers)																ARR[15:0]															
	Reset value	1	1	1	1	1	1	1	1	1	1	1	1	1	1	1	1	1	1	1	1	1	1	1	1	1	1	1	1	1	1	1	1
0x30	Reserved																																
0x34	TIMx_CCR1	CCR1[31:16] (TIM2 and TIM5 only, reserved on the other timers)																CCR1[15:0]															
	Reset value	0	0	0	0	0	0	0	0	0	0	0	0	0	0	0	0	0	0	0	0	0	0	0	0	0	0	0	0	0	0	0	0
0x38	TIMx_CCR2	CCR2[31:16] (TIM2 and TIM5 only, reserved on the other timers)																CCR2[15:0]															
	Reset value	0	0	0	0	0	0	0	0	0	0	0	0	0	0	0	0	0	0	0	0	0	0	0	0	0	0	0	0	0	0	0	0
0x3C	TIMx_CCR3	CCR3[31:16] (TIM2 and TIM5 only, reserved on the other timers)																CCR3[15:0]															
	Reset value	0	0	0	0	0	0	0	0	0	0	0	0	0	0	0	0	0	0	0	0	0	0	0	0	0	0	0	0	0	0	0	0
0x40	TIMx_CCR4	CCR4[31:16] (TIM2 and TIM5 only, reserved on the other timers)																CCR4[15:0]															
	Reset value	0	0	0	0	0	0	0	0	0	0	0	0	0	0	0	0	0	0	0	0	0	0	0	0	0	0	0	0	0	0	0	0
0x44	Reserved																																
0x48	TIMx_DCR	Res.	Res.	Res.	Res.	Res.	Res.	Res.	Res.	Res.	Res.	Res.	Res.	Res.	Res.	Res.	Res.	Res.	Res.	Res.	DBL[4:0]					Res.	Res.	Res.	DBA[4:0]				
	Reset value																				0	0	0	0	0				0	0	0	0	0
0x4C	TIMx_DMAR	Res.	Res.	Res.	Res.	Res.	Res.	Res.	Res.	Res.	Res.	Res.	Res.	Res.	Res.	Res.	Res.	DMAB[15:0]															
	Reset value																	0	0	0	0	0	0	0	0	0	0	0	0	0	0	0	0
0x50	TIM2_OR1	Res.	Res.	Res.	Res.	Res.	Res.	Res.	Res.	Res.	Res.	Res.	Res.	Res.	Res.	Res.	Res.	Res.	Res.	Res.	Res.	Res.	Res.	Res.	Res.	Res.	Res.	Res.	Res.	TI4_RMP[1:0]		ETR_RMP	ITR1_RMP
	Reset value																													0	0	0	0

Table 204. TIM2/TIM3/TIM4/TIM5 register map and reset values (continued)

Offset	Register name	31	30	29	28	27	26	25	24	23	22	21	20	19	18	17	16	15	14	13	12	11	10	9	8	7	6	5	4	3	2	1	0
0x50	**TIM3_OR1**	Res.	Res.	Res.	Res.	Res.	Res.	Res.	Res.	Res.	Res.	Res.	Res.	Res.	Res.	Res.	Res.	Res.	Res.	Res.	Res.	Res.	Res.	Res.	Res.	Res.	Res.	Res.	Res.	Res.	Res.	Res.	TI1_RMP[1:0]
	Reset value																																0
0x60	**TIM2_OR2**	Res.	Res.	Res.	Res.	Res.	Res.	Res.	Res.	Res.	Res.	Res.	Res.	Res.	Res.	Res.	ETRSEL [2:0]			Res.	Res.	Res.	Res.	Res.	Res.	Res.	Res.	Res.	Res.	Res.	Res.	Res.	Res.
	Reset value																0	0	0														
0x60	**TIM3_OR2**	Res.	Res.	Res.	Res.	Res.	Res.	Res.	Res.	Res.	Res.	Res.	Res.	Res.	Res.	Res.	ETRSEL [2:0]			Res.	Res.	Res.	Res.	Res.	Res.	Res.	Res.	Res.	Res.	Res.	Res.	Res.	Res.
	Reset value																0	0	0														

Refer to *Section 2.2 on page 75* for the register boundary addresses.

32 General-purpose timers (TIM15/TIM16/TIM17)

32.1 TIM15/TIM16/TIM17 introduction

The TIM15/TIM16/TIM17 timers consist of a 16-bit auto-reload counter driven by a programmable prescaler.

They may be used for a variety of purposes, including measuring the pulse lengths of input signals (input capture) or generating output waveforms (output compare, PWM, complementary PWM with dead-time insertion).

Pulse lengths and waveform periods can be modulated from a few microseconds to several milliseconds using the timer prescaler and the RCC clock controller prescalers.

The TIM15/TIM16/TIM17 timers are completely independent, and do not share any resources. TIM15 can be synchronized as described in *Section 32.5.21: Timer synchronization (TIM15)*.

32.2 TIM15 main features

TIM15 includes the following features:

- 16-bit auto-reload upcounter
- 16-bit programmable prescaler used to divide (also “on the fly”) the counter clock frequency by any factor between 1 and 65535
- Up to 2 independent channels for:
  - Input capture
  - Output compare
  - PWM generation (edge mode)
  - One-pulse mode output
- Complementary outputs with programmable dead-time (for channel 1 only)
- Synchronization circuit to control the timer with external signals and to interconnect several timers together
- Repetition counter to update the timer registers only after a given number of cycles of the counter
- Break input to put the timer’s output signals in the reset state or a known state
- Interrupt/DMA generation on the following events:
  - Update: counter overflow, counter initialization (by software or internal/external trigger)
  - Trigger event (counter start, stop, initialization or count by internal/external trigger)
  - Input capture
  - Output compare
  - Break input (interrupt request)

32.3 TIM16/TIM17 main features

The TIM16/TIM17 timers include the following features:

- 16-bit auto-reload upcounter
- 16-bit programmable prescaler used to divide (also “on the fly”) the counter clock frequency by any factor between 1 and 65535
- One channel for:
  - Input capture
  - Output compare
  - PWM generation (edge-aligned mode)
  - One-pulse mode output
- Complementary outputs with programmable dead-time
- Repetition counter to update the timer registers only after a given number of cycles of the counter
- Break input to put the timer’s output signals in the reset state or a known state
- Interrupt/DMA generation on the following events:
  - Update: counter overflow
  - Input capture
  - Output compare
  - Break input

Figure 333. TIM15 block diagram

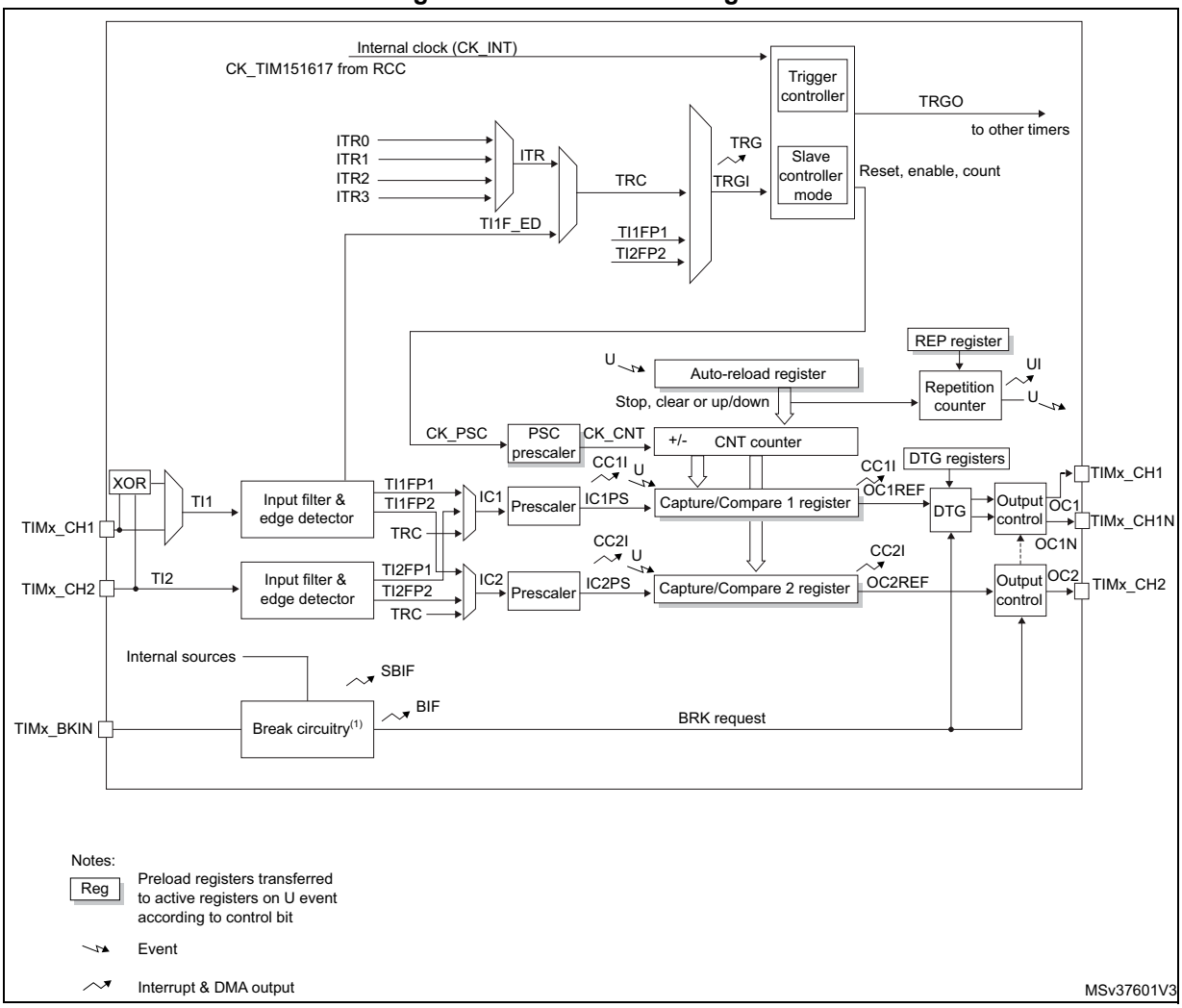

1. The internal break event source can be:
   - A clock failure event generated by CSS. For further information on the CSS, refer to *Section 6.2.10: Clock security system (CSS)*
   - A PVD output
   - SRAM parity error signal
   - Cortex®-M4 LOCKUP (Hardfault) output
   - COMP output

Figure 334. TIM16/TIM17 block diagram

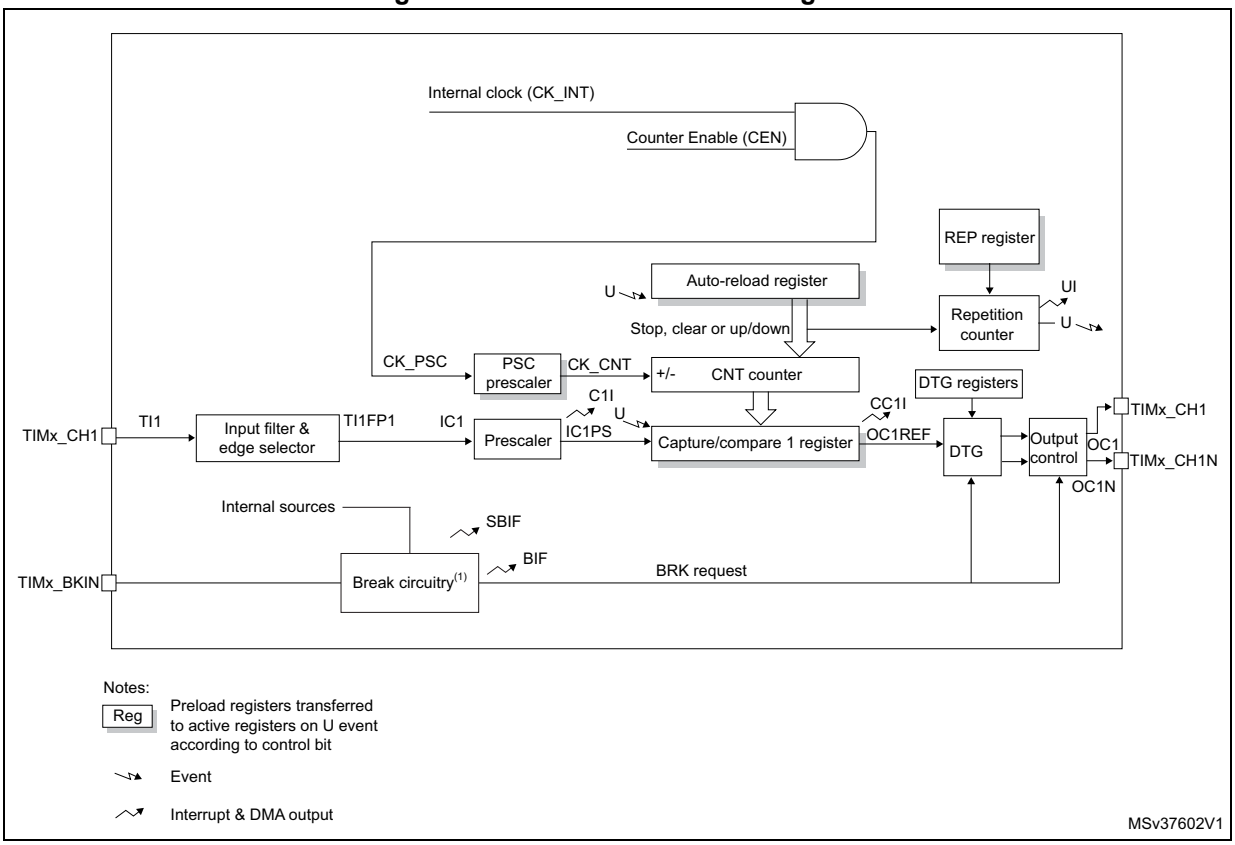

1. The internal break event source can be:
   - A clock failure event generated by CSS. For further information on the CSS, refer to *Section 6.2.10: Clock security system (CSS)*
   - A PVD output
   - SRAM parity error signal
   - Cortex®-M4 LOCKUP (Hardfault) output
   - COMP output

32.4 Implementation

The extended remap feature described in register TIM16_OR1 is not available on STM32L47x and STM32L48x devices.

32.5 TIM15/TIM16/TIM17 functional description

32.5.1 Time-base unit

The main block of the programmable advanced-control timer is a 16-bit upcounter with its related auto-reload register. The counter clock can be divided by a prescaler.

The counter, the auto-reload register and the prescaler register can be written or read by software. This is true even when the counter is running.

The time-base unit includes:

- Counter register (TIMx_CNT)
- Prescaler register (TIMx_PSC)
- Auto-reload register (TIMx_ARR)
- Repetition counter register (TIMx_RCR)

The auto-reload register is preloaded. Writing to or reading from the auto-reload register accesses the preload register. The content of the preload register are transferred into the shadow register permanently or at each update event (UEV), depending on the auto-reload preload enable bit (ARPE) in TIMx_CR1 register. The update event is sent when the counter reaches the overflow and if the UDIS bit equals 0 in the TIMx_CR1 register. It can also be generated by software. The generation of the update event is described in detailed for each configuration.

The counter is clocked by the prescaler output CK_CNT, which is enabled only when the counter enable bit (CEN) in TIMx_CR1 register is set (refer also to the slave mode controller description to get more details on counter enabling).

Note that the counter starts counting 1 clock cycle after setting the CEN bit in the TIMx_CR1 register.

Prescaler description

The prescaler can divide the counter clock frequency by any factor between 1 and 65536. It is based on a 16-bit counter controlled through a 16-bit register (in the TIMx_PSC register). It can be changed on the fly as this control register is buffered. The new prescaler ratio is taken into account at the next update event.

Figure 335 and *Figure 336* give some examples of the counter behavior when the prescaler ratio is changed on the fly:

Figure 335. Counter timing diagram with prescaler division change from 1 to 2

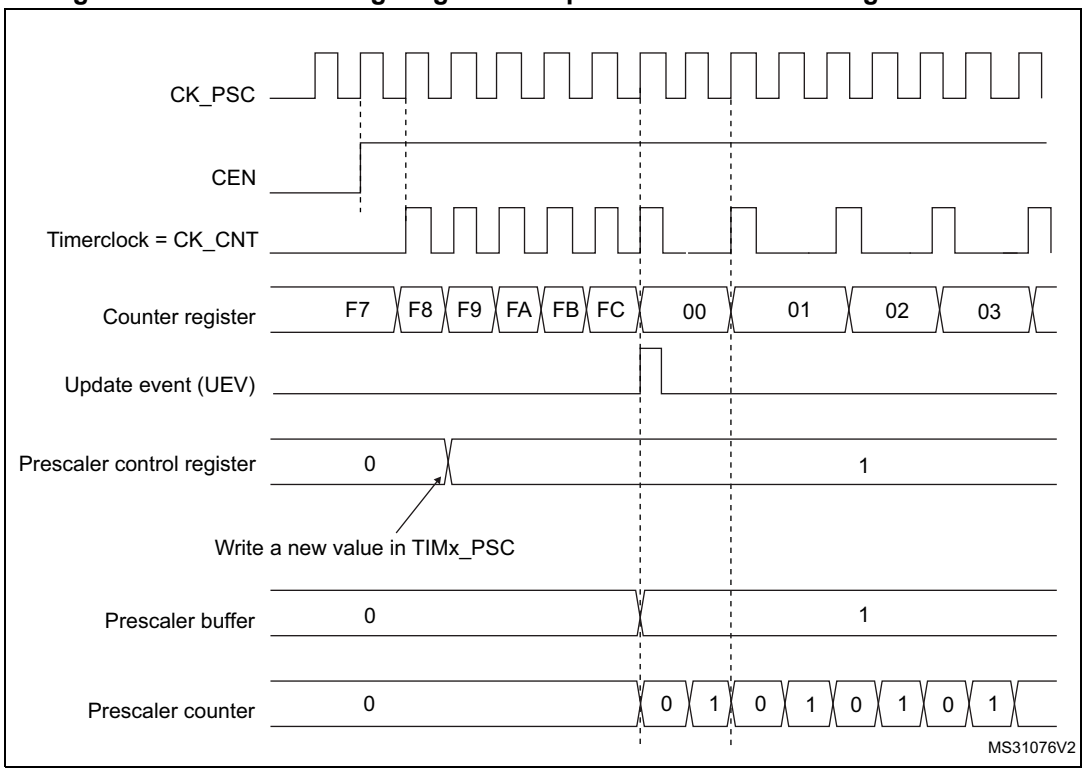

Figure 336. Counter timing diagram with prescaler division change from 1 to 4

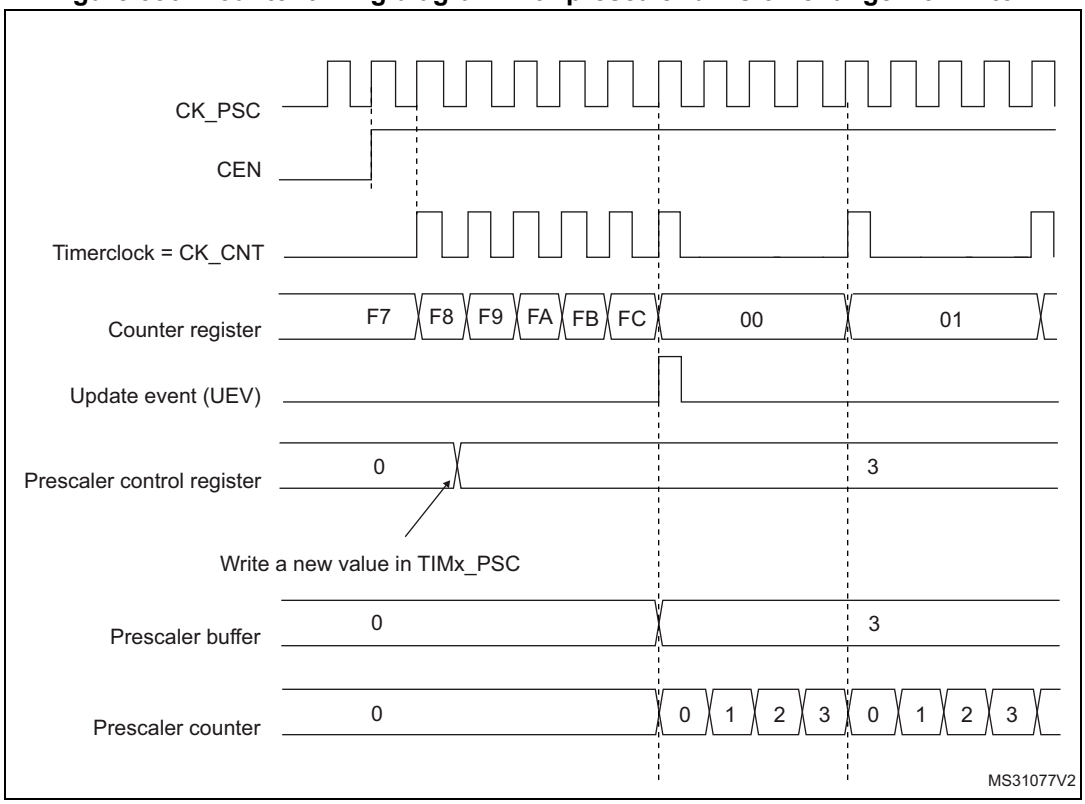

32.5.2 Counter modes

Upcounting mode

In upcounting mode, the counter counts from 0 to the auto-reload value (content of the TIMx_ARR register), then restarts from 0 and generates a counter overflow event.

If the repetition counter is used, the update event (UEV) is generated after upcounting is repeated for the number of times programmed in the repetition counter register (TIMx_RCR). Else the update event is generated at each counter overflow.

Setting the UG bit in the TIMx_EGR register (by software or by using the slave mode controller) also generates an update event.

The UEV event can be disabled by software by setting the UDIS bit in the TIMx_CR1 register. This is to avoid updating the shadow registers while writing new values in the preload registers. Then no update event occurs until the UDIS bit has been written to 0. However, the counter restarts from 0, as well as the counter of the prescaler (but the prescale rate does not change). In addition, if the URS bit (update request selection) in TIMx_CR1 register is set, setting the UG bit generates an update event UEV but without setting the UIF flag (thus no interrupt or DMA request is sent). This is to avoid generating both update and capture interrupts when clearing the counter on the capture event.

When an update event occurs, all the registers are updated and the update flag (UIF bit in TIMx_SR register) is set (depending on the URS bit):

- The repetition counter is reloaded with the content of TIMx_RCR register,
- The auto-reload shadow register is updated with the preload value (TIMx_ARR),
- The buffer of the prescaler is reloaded with the preload value (content of the TIMx_PSC register).

The following figures show some examples of the counter behavior for different clock frequencies when TIMx_ARR=0x36.

Figure 337. Counter timing diagram, internal clock divided by 1

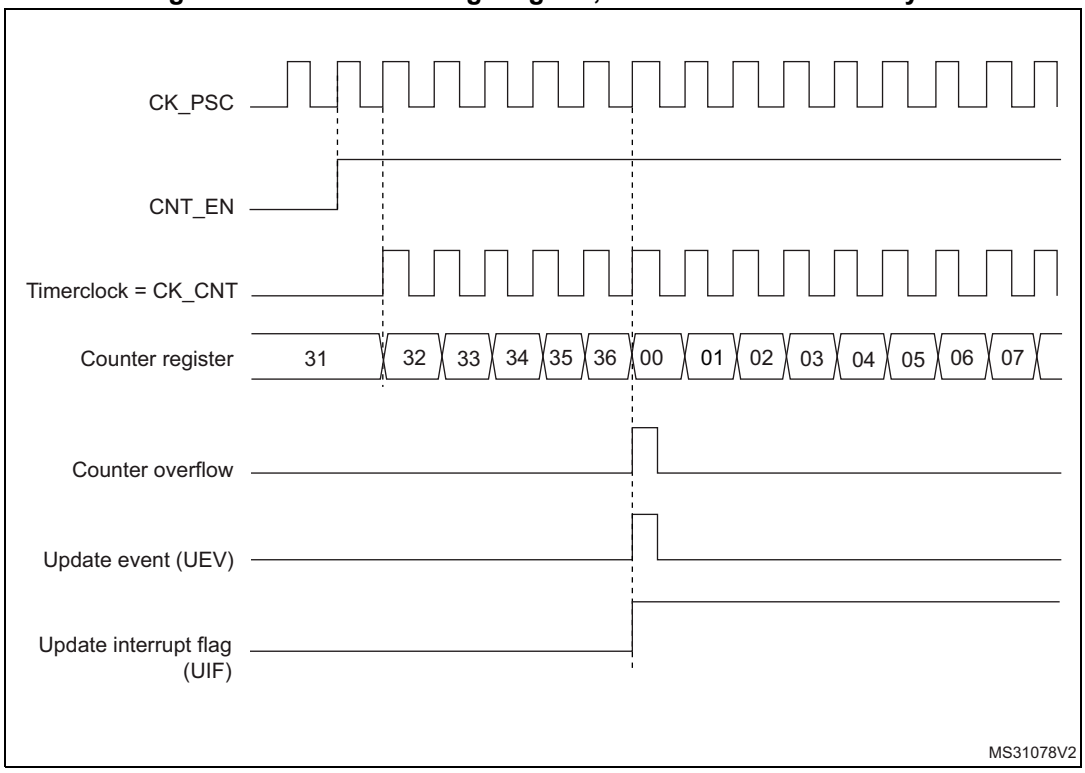

Figure 338. Counter timing diagram, internal clock divided by 2

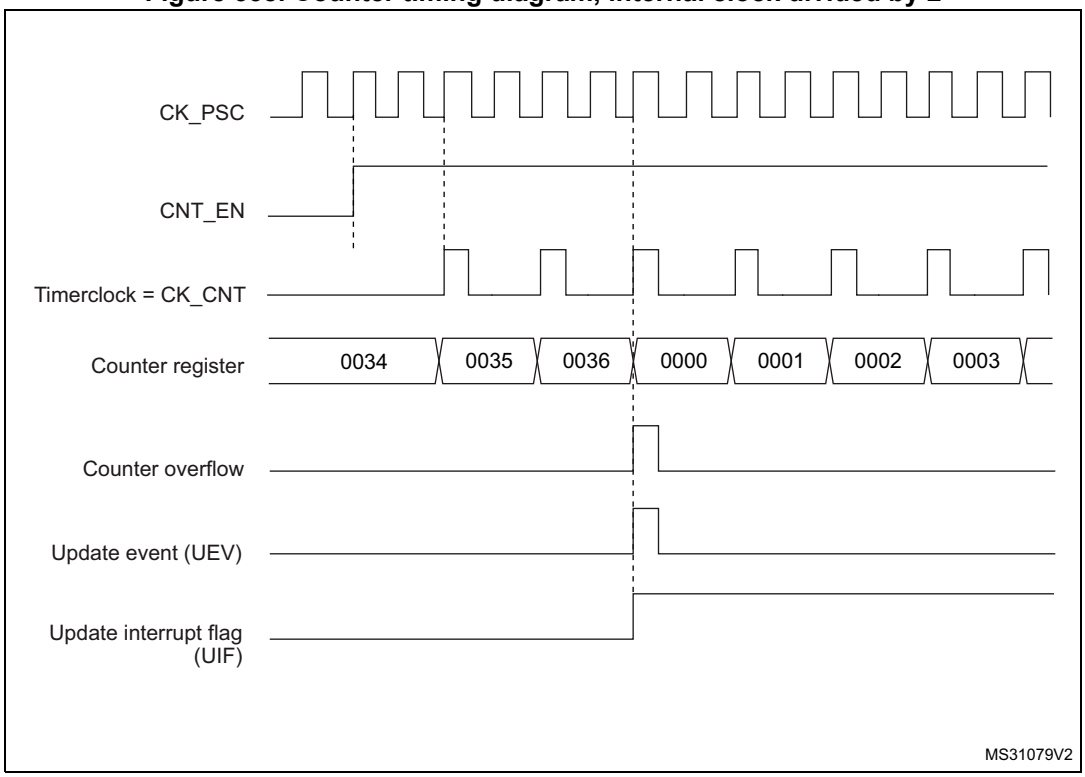

Figure 339. Counter timing diagram, internal clock divided by 4

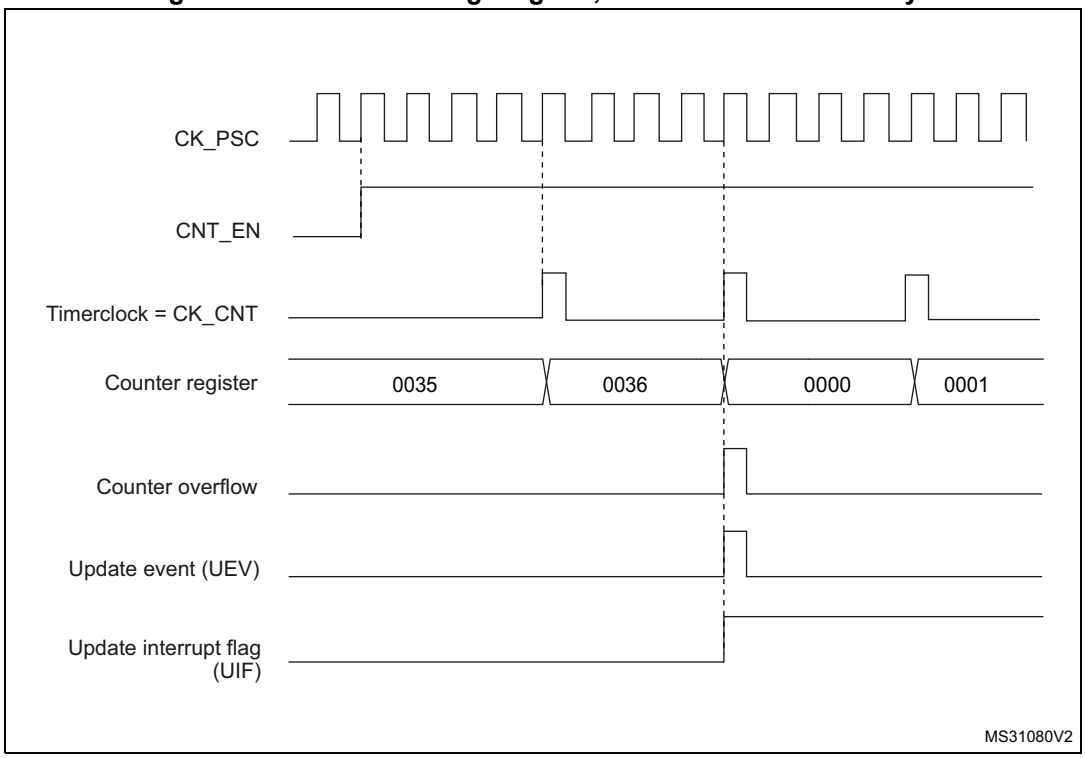

Figure 340. Counter timing diagram, internal clock divided by N

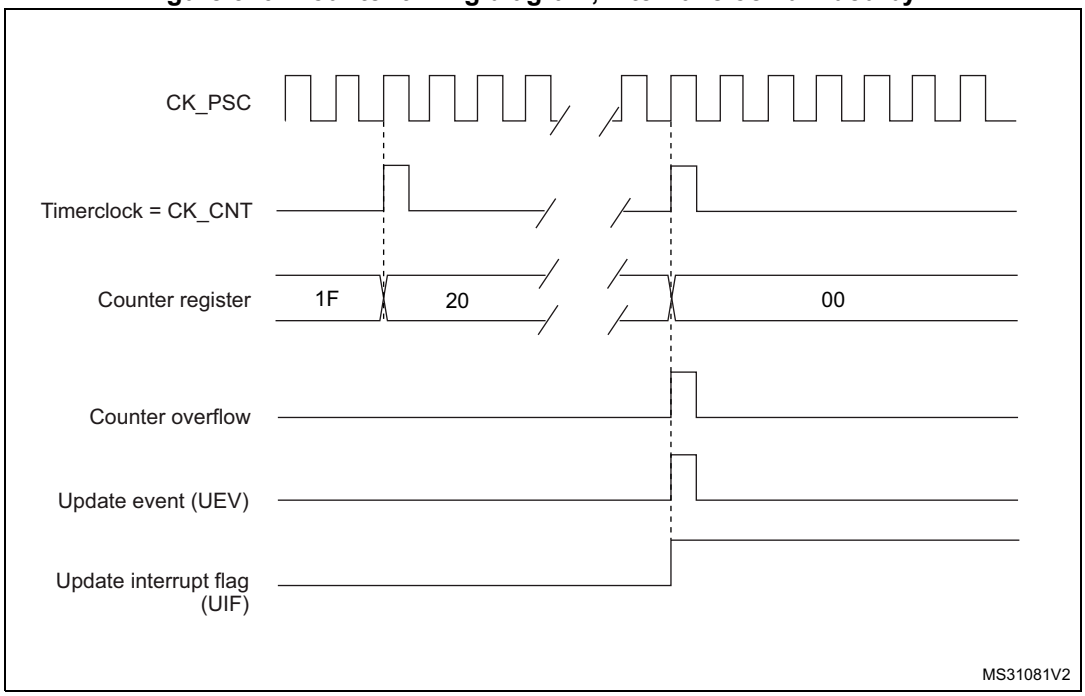

Figure 341. Counter timing diagram, update event when ARPE=0 (TIMx_ARR not preloaded)

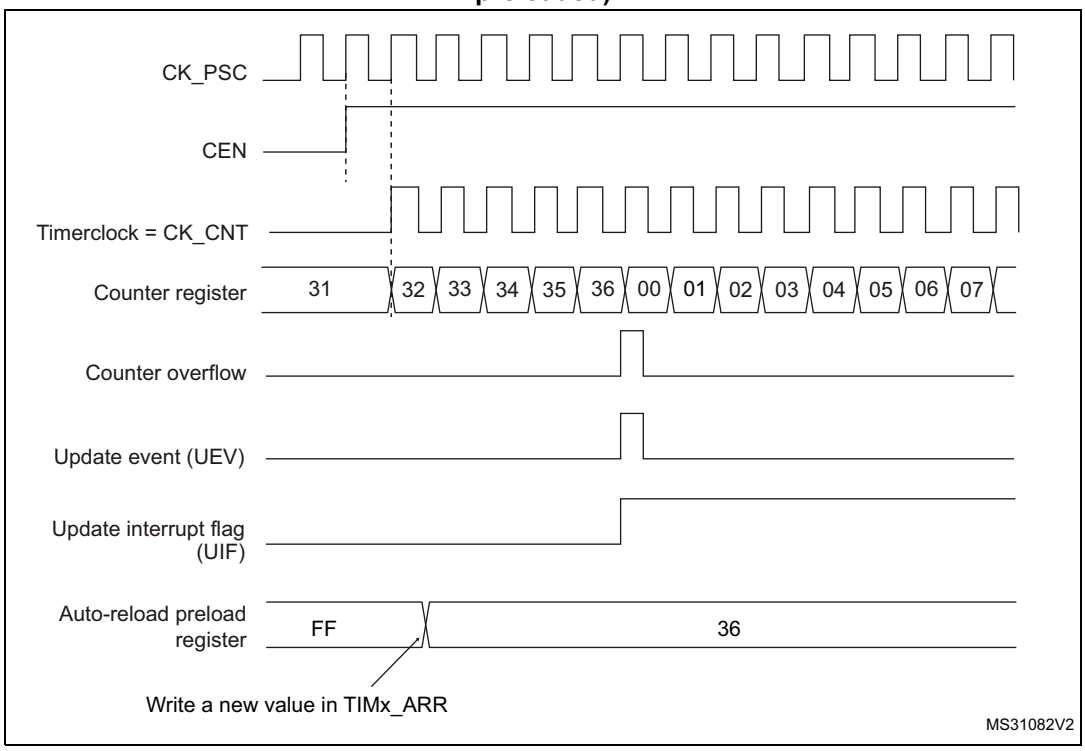

Figure 342. Counter timing diagram, update event when ARPE=1 (TIMx_ARR preloaded)

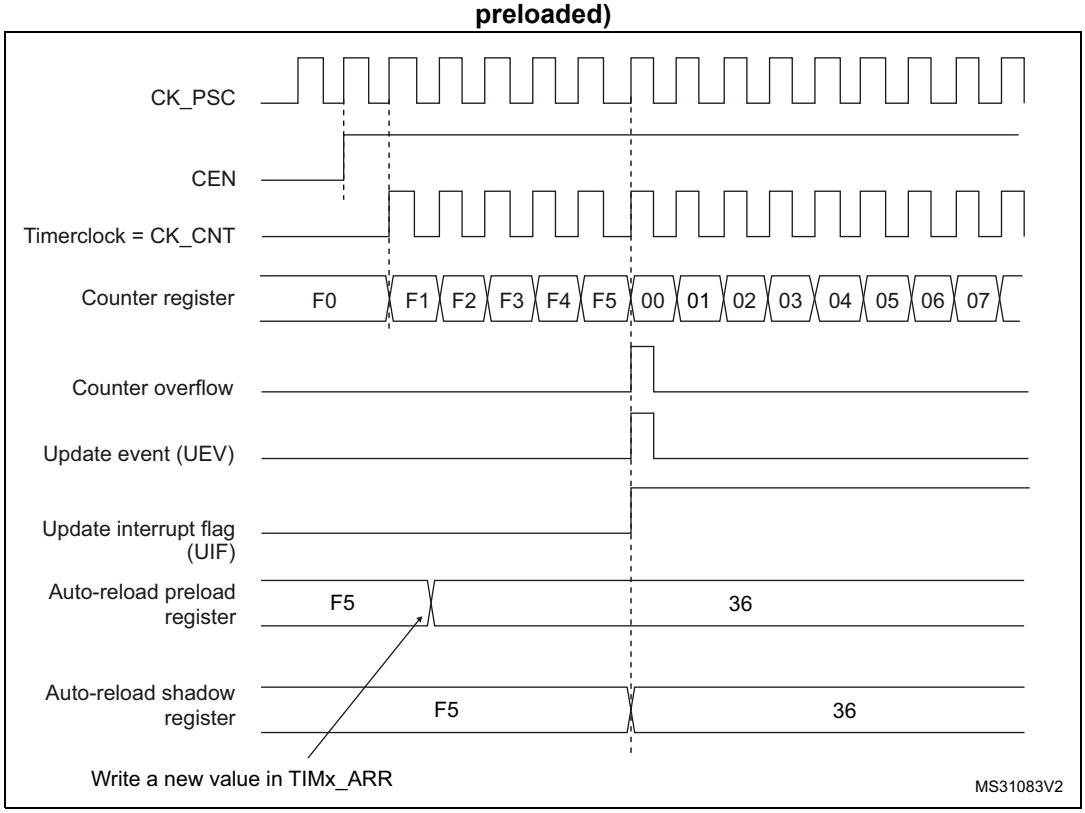

32.5.3 Repetition counter

Section 32.5.1: Time-base unit describes how the update event (UEV) is generated with respect to the counter overflows. It is actually generated only when the repetition counter has reached zero. This can be useful when generating PWM signals.

This means that data are transferred from the preload registers to the shadow registers (TIMx_ARR auto-reload register, TIMx_PSC prescaler register, but also TIMx_CCRx capture/compare registers in compare mode) every N counter overflows, where N is the value in the TIMx_RCR repetition counter register.

The repetition counter is decremented at each counter overflow.

The repetition counter is an auto-reload type; the repetition rate is maintained as defined by the TIMx_RCR register value (refer to *Figure 343*). When the update event is generated by software (by setting the UG bit in TIMx_EGR register) or by hardware through the slave mode controller, it occurs immediately whatever the value of the repetition counter is and the repetition counter is reloaded with the content of the TIMx_RCR register.

Figure 343. Update rate examples depending on mode and TIMx_RCR register settings

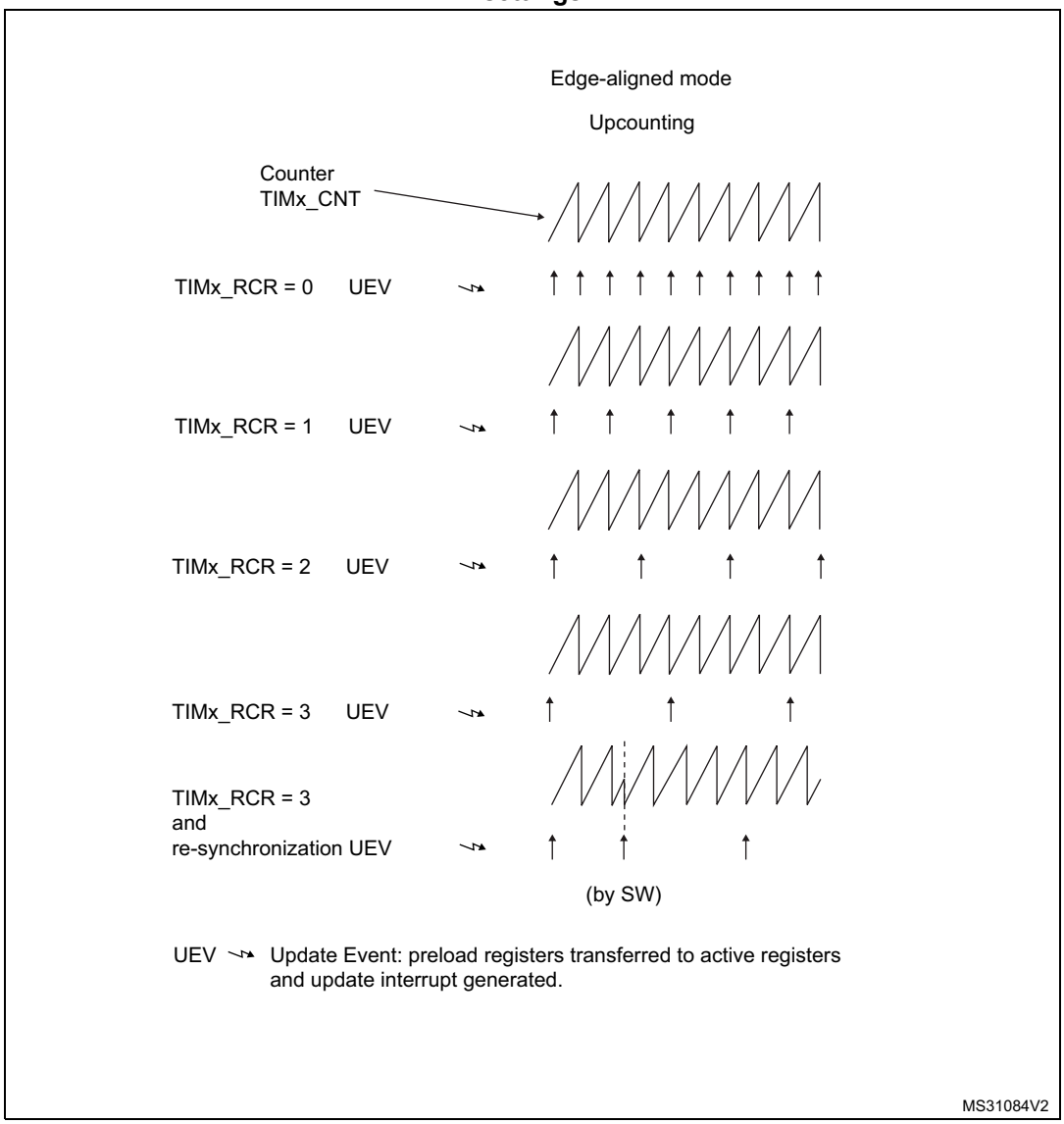

32.5.4 Clock selection

The counter clock can be provided by the following clock sources:

- Internal clock (CK_INT)
- External clock mode1: external input pin
- Internal trigger inputs (ITRx) (only for TIM15): using one timer as the prescaler for another timer, for example, TIM1 can be configured to act as a prescaler for TIM15. Refer to *Using one timer as prescaler for another timer on page 1054* for more details.

Internal clock source (CK_INT)

If the slave mode controller is disabled (SMS=000), then the CEN (in the TIMx_CR1 register) and UG bits (in the TIMx_EGR register) are actual control bits and can be changed

only by software (except UG which remains cleared automatically). As soon as the CEN bit is written to 1, the prescaler is clocked by the internal clock CK_INT.

Figure 344 shows the behavior of the control circuit and the upcounter in normal mode, without prescaler.

Figure 344. Control circuit in normal mode, internal clock divided by 1

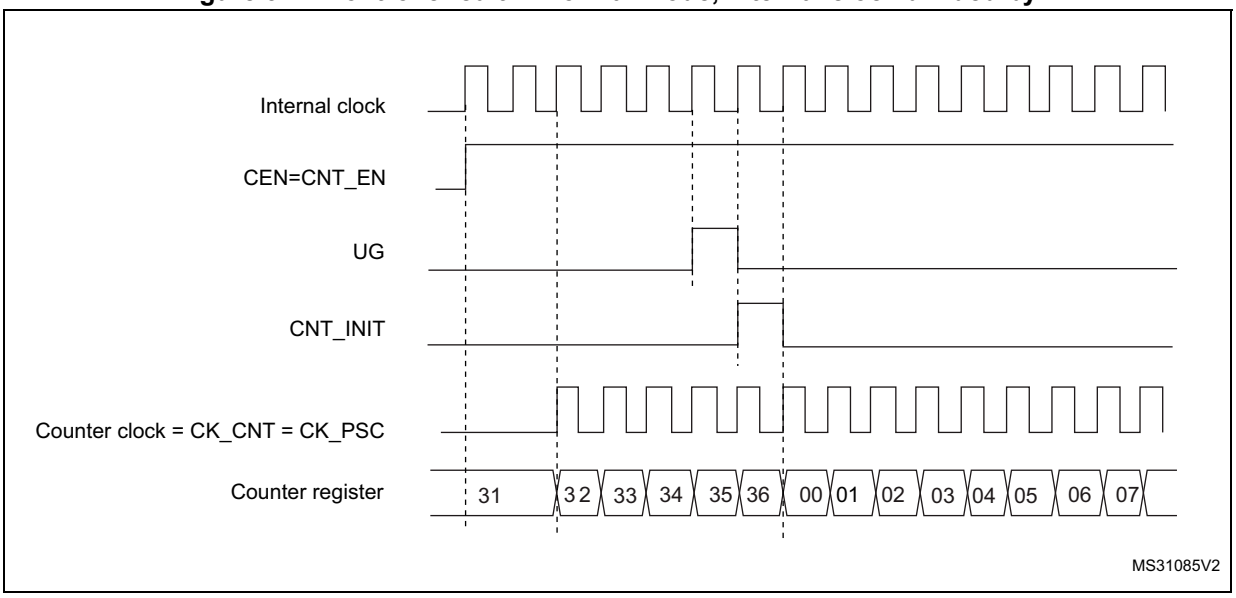

External clock source mode 1

This mode is selected when SMS=111 in the TIMx_SMCR register. The counter can count at each rising or falling edge on a selected input.

Figure 345. TI2 external clock connection example

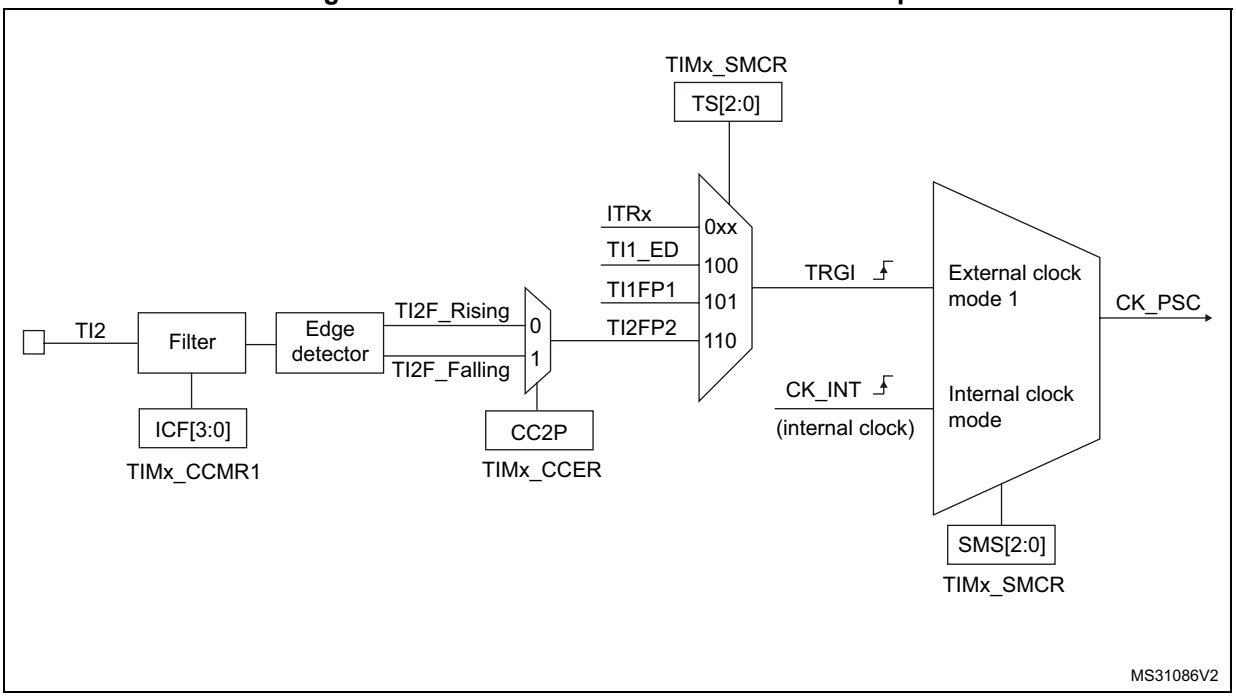

For example, to configure the upcounter to count in response to a rising edge on the TI2 input, use the following procedure:

1. Configure channel 2 to detect rising edges on the TI2 input by writing CC2S = ‘01’ in the TIMx_CCMR1 register.
2. Configure the input filter duration by writing the IC2F[3:0] bits in the TIMx_CCMR1 register (if no filter is needed, keep IC2F=0000).
3. Select rising edge polarity by writing CC2P=0 in the TIMx_CCER register.
4. Configure the timer in external clock mode 1 by writing SMS=111 in the TIMx_SMCR register.
5. Select TI2 as the trigger input source by writing TS=110 in the TIMx_SMCR register.
6. Enable the counter by writing CEN=1 in the TIMx_CR1 register.

Note: The capture prescaler is not used for triggering, so it does not need to be configured.

When a rising edge occurs on TI2, the counter counts once and the TIF flag is set.

The delay between the rising edge on TI2 and the actual clock of the counter is due to the resynchronization circuit on TI2 input.

Figure 346. Control circuit in external clock mode 1

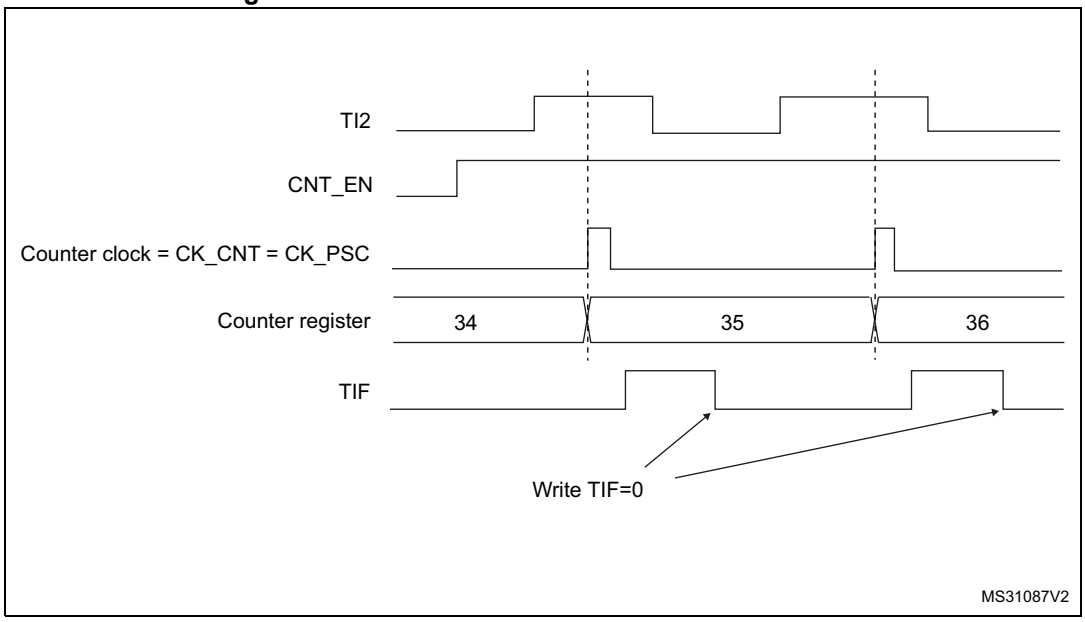

32.5.5 Capture/compare channels

Each Capture/Compare channel is built around a capture/compare register (including a shadow register), a input stage for capture (with digital filter, multiplexing and prescaler) and an output stage (with comparator and output control).

Figure 347 to *Figure 350* give an overview of one Capture/Compare channel.

The input stage samples the corresponding TIx input to generate a filtered signal TIxF. Then, an edge detector with polarity selection generates a signal (TIxFPx) which can be used as trigger input by the slave mode controller or as the capture command. It is prescaled before the capture register (ICxPS).

Figure 347. Capture/compare channel (example: channel 1 input stage)

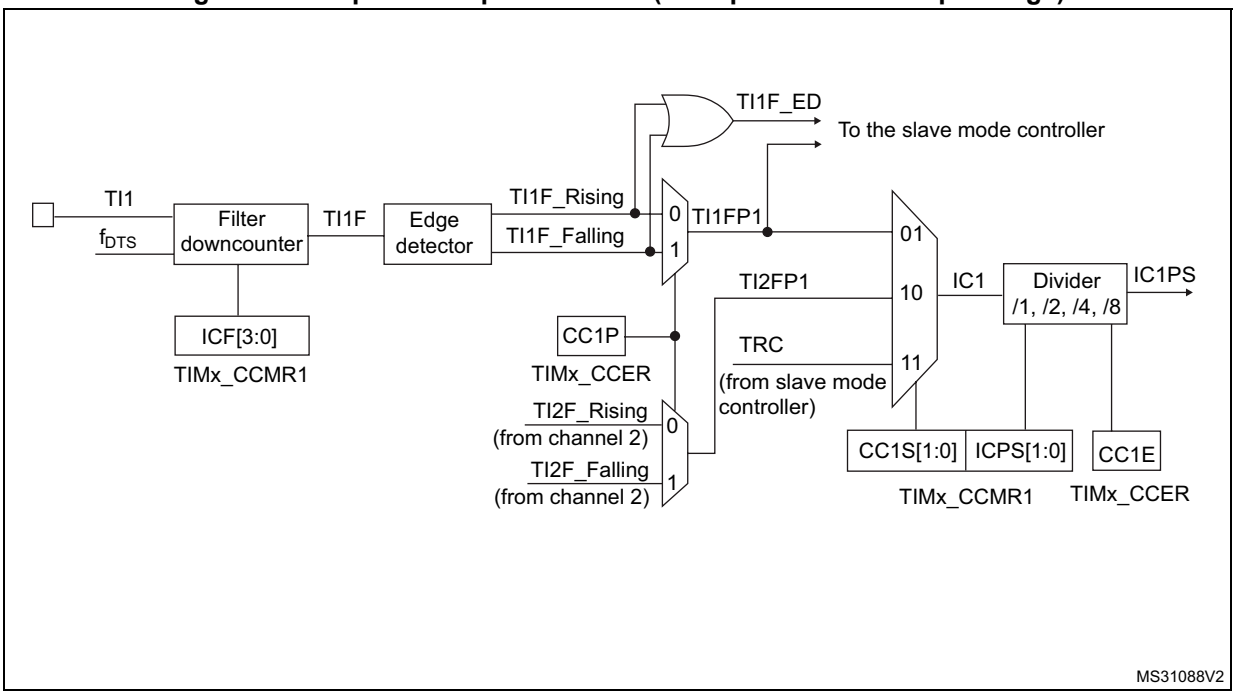

The output stage generates an intermediate waveform which is then used for reference: OCxRef (active high). The polarity acts at the end of the chain.

Figure 348. Capture/compare channel 1 main circuit

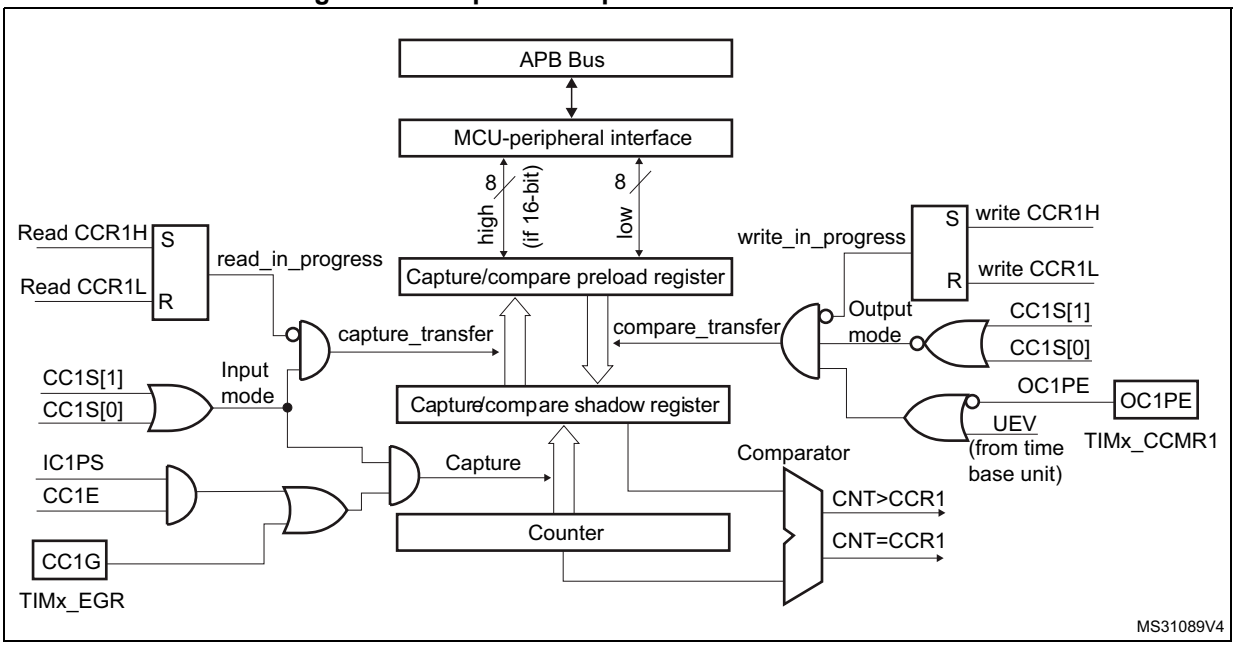

Figure 349. Output stage of capture/compare channel (channel 1)

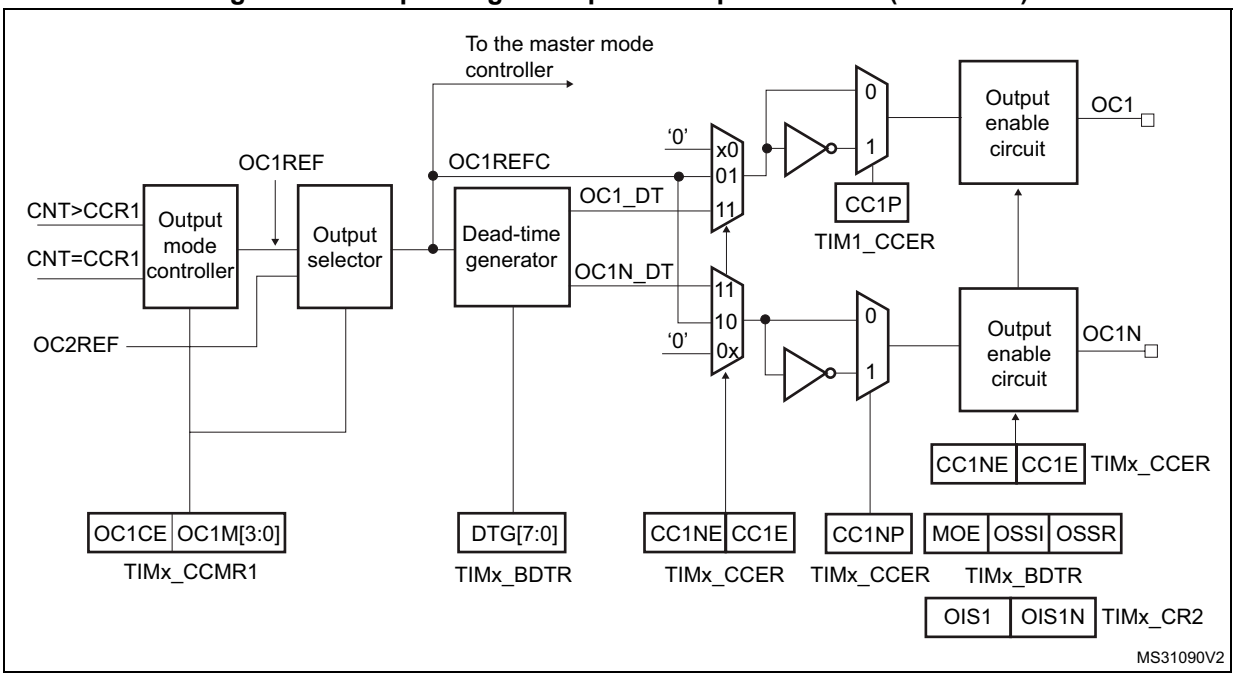

Figure 350. Output stage of capture/compare channel (channel 2 for TIM15)

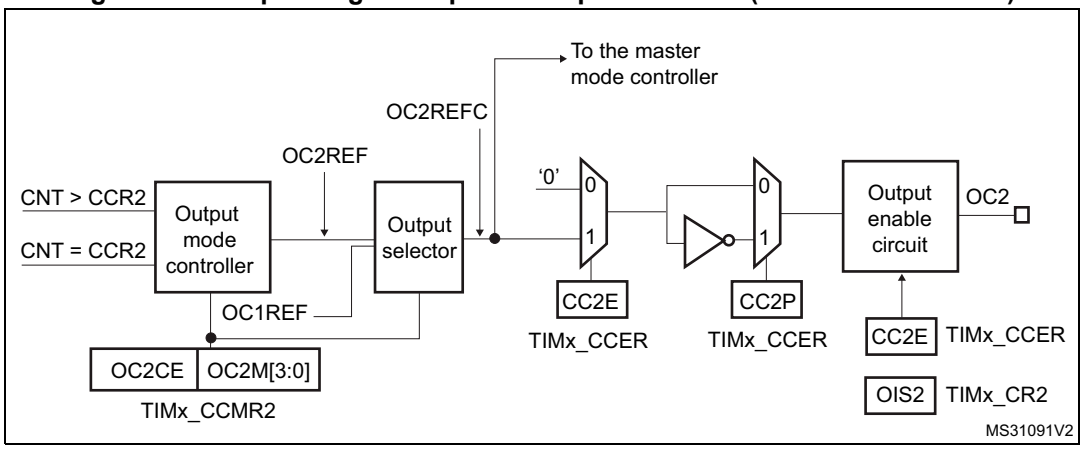

The capture/compare block is made of one preload register and one shadow register. Write and read always access the preload register.

In capture mode, captures are actually done in the shadow register, which is copied into the preload register.

In compare mode, the content of the preload register is copied into the shadow register which is compared to the counter.

32.5.6 Input capture mode

In Input capture mode, the Capture/Compare Registers (TIMx_CCRx) are used to latch the value of the counter after a transition detected by the corresponding ICx signal. When a capture occurs, the corresponding CCXIF flag (TIMx_SR register) is set and an interrupt or a DMA request can be sent if they are enabled. If a capture occurs while the CCxIF flag was

already high, then the over-capture flag CCxOF (TIMx_SR register) is set. CCxIF can be cleared by software by writing it to '0' or by reading the captured data stored in the TIMx_CCRx register. CCxOF is cleared when it is written with 0.

The following example shows how to capture the counter value in TIMx_CCR1 when TI1 input rises. To do this, use the following procedure:

1. Select the active input: TIMx_CCR1 must be linked to the TI1 input, so write the CC1S bits to 01 in the TIMx_CCMR1 register. As soon as CC1S becomes different from 00, the channel is configured in input and the TIMx_CCR1 register becomes read-only.
2. Program the appropriate input filter duration in relation with the signal connected to the timer (when the input is one of the TIx (ICxF bits in the TIMx_CCMRx register). Let's imagine that, when toggling, the input signal is not stable during at least 5 internal clock cycles. We must program a filter duration longer than these 5 clock cycles. We can validate a transition on TI1 when 8 consecutive samples with the new level have been detected (sampled at f_{DTS} frequency). Then write IC1F bits to 0011 in the TIMx_CCMR1 register.
3. Select the edge of the active transition on the TI1 channel by writing CC1P bit to 0 in the TIMx_CCER register (rising edge in this case).
4. Program the input prescaler. In our example, we wish the capture to be performed at each valid transition, so the prescaler is disabled (write IC1PS bits to '00' in the TIMx_CCMR1 register).
5. Enable capture from the counter into the capture register by setting the CC1E bit in the TIMx_CCER register.
6. If needed, enable the related interrupt request by setting the CC1IE bit in the TIMx_DIER register, and/or the DMA request by setting the CC1DE bit in the TIMx_DIER register.

When an input capture occurs:

- The TIMx_CCR1 register gets the value of the counter on the active transition.
- CC1IF flag is set (interrupt flag). CC1OF is also set if at least two consecutive captures occurred whereas the flag was not cleared.
- An interrupt is generated depending on the CC1IE bit.
- A DMA request is generated depending on the CC1DE bit.

In order to handle the overcapture, it is recommended to read the data before the overcapture flag. This is to avoid missing an overcapture which could happen after reading the flag and before reading the data.

Note: IC interrupt and/or DMA requests can be generated by software by setting the corresponding CCxG bit in the TIMx_EGR register.

32.5.7 PWM input mode (only for TIM15)

This mode is a particular case of input capture mode. The procedure is the same except:

- Two ICx signals are mapped on the same TIx input.
- These 2 ICx signals are active on edges with opposite polarity.
- One of the two TIxFP signals is selected as trigger input and the slave mode controller is configured in reset mode.

For example, one can measure the period (in TIMx_CCR1 register) and the duty cycle (in TIMx_CCR2 register) of the PWM applied on TI1 using the following procedure (depending on CK_INT frequency and prescaler value):

1. Select the active input for TIMx_CCR1: write the CC1S bits to 01 in the TIMx_CCMR1 register (TI1 selected).
2. Select the active polarity for TI1FP1 (used both for capture in TIMx_CCR1 and counter clear): write the CC1P and CC1NP bits to '0' (active on rising edge).
3. Select the active input for TIMx_CCR2: write the CC2S bits to 10 in the TIMx_CCMR1 register (TI1 selected).
4. Select the active polarity for TI1FP2 (used for capture in TIMx_CCR2): write the CC2P and CC2NP bits to '1' (active on falling edge).
5. Select the valid trigger input: write the TS bits to 101 in the TIMx_SMCR register (TI1FP1 selected).
6. Configure the slave mode controller in reset mode: write the SMS bits to 100 in the TIMx_SMCR register.
7. Enable the captures: write the CC1E and CC2E bits to '1' in the TIMx_CCER register.

Figure 351. PWM input mode timing

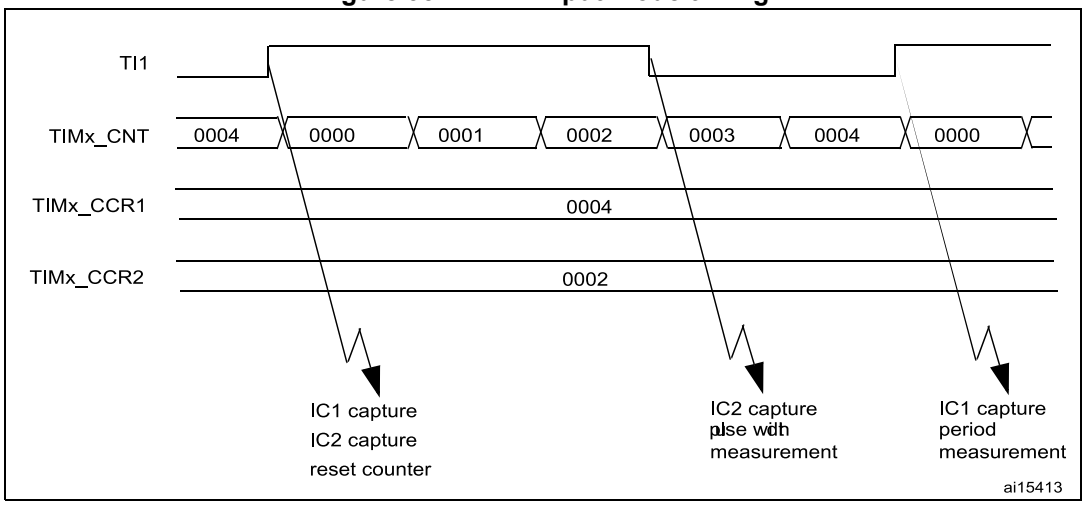

1. The PWM input mode can be used only with the TIMx_CH1/TIMx_CH2 signals due to the fact that only TI1FP1 and TI2FP2 are connected to the slave mode controller.

32.5.8 Forced output mode

In output mode (CCxS bits = 00 in the TIMx_CCMRx register), each output compare signal (OCxREF and then OCx/OCxN) can be forced to active or inactive level directly by software, independently of any comparison between the output compare register and the counter.

To force an output compare signal (OCXREF/OCx) to its active level, one just needs to write 101 in the OCxM bits in the corresponding TIMx_CCMRx register. Thus OCXREF is forced high (OCxREF is always active high) and OCx get opposite value to CCxP polarity bit.

For example: CCxP=0 (OCx active high) => OCx is forced to high level.

The OCxREF signal can be forced low by writing the OCxM bits to 100 in the TIMx_CCMRx register.

Anyway, the comparison between the TIMx_CCRx shadow register and the counter is still performed and allows the flag to be set. Interrupt and DMA requests can be sent accordingly. This is described in the output compare mode section below.

32.5.9 Output compare mode

This function is used to control an output waveform or indicating when a period of time has elapsed.

When a match is found between the capture/compare register and the counter, the output compare function:

- Assigns the corresponding output pin to a programmable value defined by the output compare mode (OCxM bits in the TIMx_CCMRx register) and the output polarity (CCxP bit in the TIMx_CCER register). The output pin can keep its level (OCXM=000), be set active (OCxM=001), be set inactive (OCxM=010) or can toggle (OCxM=011) on match.
- Sets a flag in the interrupt status register (CCxIF bit in the TIMx_SR register).
- Generates an interrupt if the corresponding interrupt mask is set (CCXIE bit in the TIMx_DIER register).
- Sends a DMA request if the corresponding enable bit is set (CCxDE bit in the TIMx_DIER register, CCDS bit in the TIMx_CR2 register for the DMA request selection).

The TIMx_CCRx registers can be programmed with or without preload registers using the OCxPE bit in the TIMx_CCMRx register.

In output compare mode, the update event UEV has no effect on OCxREF and OCx output. The timing resolution is one count of the counter. Output compare mode can also be used to output a single pulse (in One-pulse mode).

Procedure

1. Select the counter clock (internal, external, prescaler).
2. Write the desired data in the TIMx_ARR and TIMx_CCRx registers.
3. Set the CCxIE bit if an interrupt request is to be generated.
4. Select the output mode. For example:
   - Write OCxM = 011 to toggle OCx output pin when CNT matches CCRx
   - Write OCxPE = 0 to disable preload register
   - Write CCxP = 0 to select active high polarity
   - Write CCxE = 1 to enable the output
5. Enable the counter by setting the CEN bit in the TIMx_CR1 register.

The TIMx_CCRx register can be updated at any time by software to control the output waveform, provided that the preload register is not enabled (OCxPE='0', else TIMx_CCRx shadow register is updated only at the next update event UEV). An example is given in *Figure 352*.

Figure 352. Output compare mode, toggle on OC1

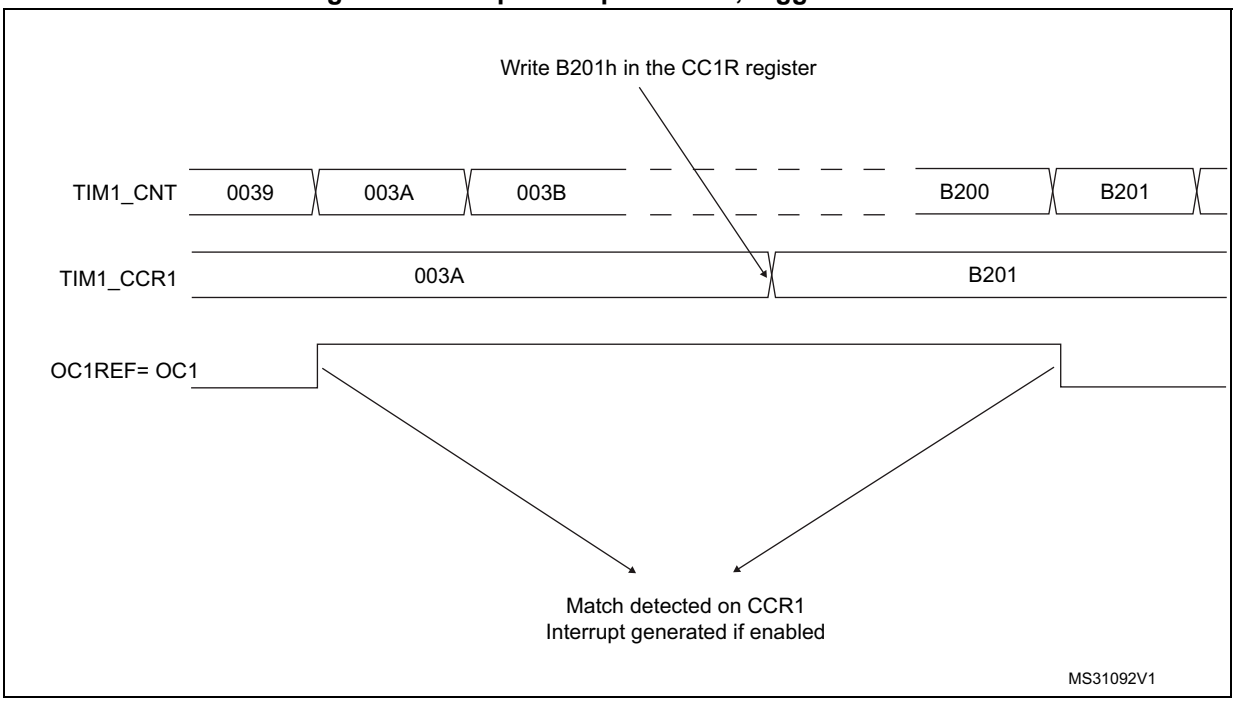

32.5.10 PWM mode

Pulse Width Modulation mode allows a signal to be generated with a frequency determined by the value of the TIMx_ARR register and a duty cycle determined by the value of the TIMx_CCRx register.

The PWM mode can be selected independently on each channel (one PWM per OCx output) by writing ‘110’ (PWM mode 1) or ‘111’ (PWM mode 2) in the OCxM bits in the TIMx_CCMRx register. The corresponding preload register must be enabled by setting the OCxPE bit in the TIMx_CCMRx register, and eventually the auto-reload preload register (in upcounting or center-aligned modes) by setting the ARPE bit in the TIMx_CR1 register.

As the preload registers are transferred to the shadow registers only when an update event occurs, before starting the counter, all registers must be initialized by setting the UG bit in the TIMx_EGR register.

OCx polarity is software programmable using the CCxP bit in the TIMx_CCER register. It can be programmed as active high or active low. OCx output is enabled by a combination of the CCxE, CCxNE, MOE, OSSI and OSSR bits (TIMx_CCER and TIMx_BDTR registers). Refer to the TIMx_CCER register description for more details.

In PWM mode (1 or 2), TIMx_CNT and TIMx_CCRx are always compared to determine whether TIMx_CCRx ≤ TIMx_CNT or TIMx_CNT ≤ TIMx_CCRx (depending on the direction of the counter).

The TIM15/TIM16/TIM17 are capable of upcounting only. Refer to *Upcounting mode on page 1092*.

In the following example, we consider PWM mode 1. The reference PWM signal OCxREF is high as long as TIMx_CNT < TIMx_CCRx else it becomes low. If the compare value in TIMx_CCRx is greater than the auto-reload value (in TIMx_ARR) then OCxREF is held at

‘1’. If the compare value is 0 then OCxRef is held at ‘0’. *Figure 353* shows some edge-aligned PWM waveforms in an example where TIMx_ARR=8.

Figure 353. Edge-aligned PWM waveforms (ARR=8)

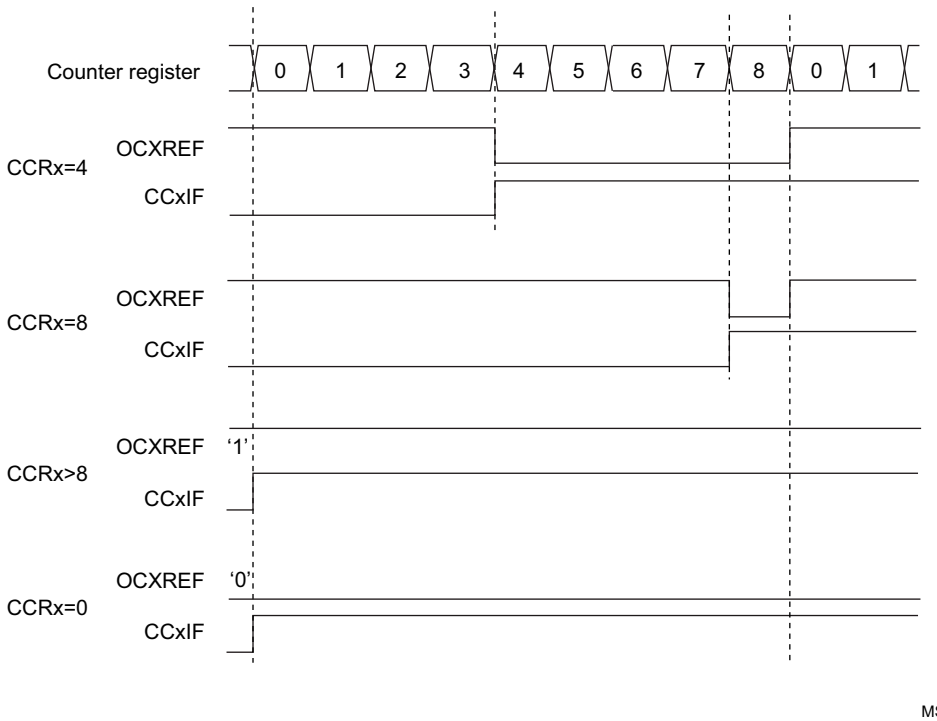

32.5.11 Combined PWM mode (TIM15 only)

Combined PWM mode allows two edge or center-aligned PWM signals to be generated with programmable delay and phase shift between respective pulses. While the frequency is determined by the value of the TIMx_ARR register, the duty cycle and delay are determined by the two TIMx_CCRx registers. The resulting signals, OCxREFC, are made of an OR or AND logical combination of two reference PWMs:

- OC1REFC (or OC2REFC) is controlled by the TIMx_CCR1 and TIMx_CCR2 registers

Combined PWM mode can be selected independently on two channels (one OCx output per pair of CCR registers) by writing ‘1100’ (Combined PWM mode 1) or ‘1101’ (Combined PWM mode 2) in the OCxM bits in the TIMx_CCMRx register.

When a given channel is used as a combined PWM channel, its complementary channel must be configured in the opposite PWM mode (for instance, one in Combined PWM mode 1 and the other in Combined PWM mode 2).

Note: The OCxM[3:0] bit field is split into two parts for compatibility reasons, the most significant bit is not contiguous with the 3 least significant ones.

Figure 354 represents an example of signals that can be generated using Asymmetric PWM mode, obtained with the following configuration:

- Channel 1 is configured in Combined PWM mode 2,
- Channel 2 is configured in PWM mode 1,

Figure 354. Combined PWM mode on channel 1 and 2

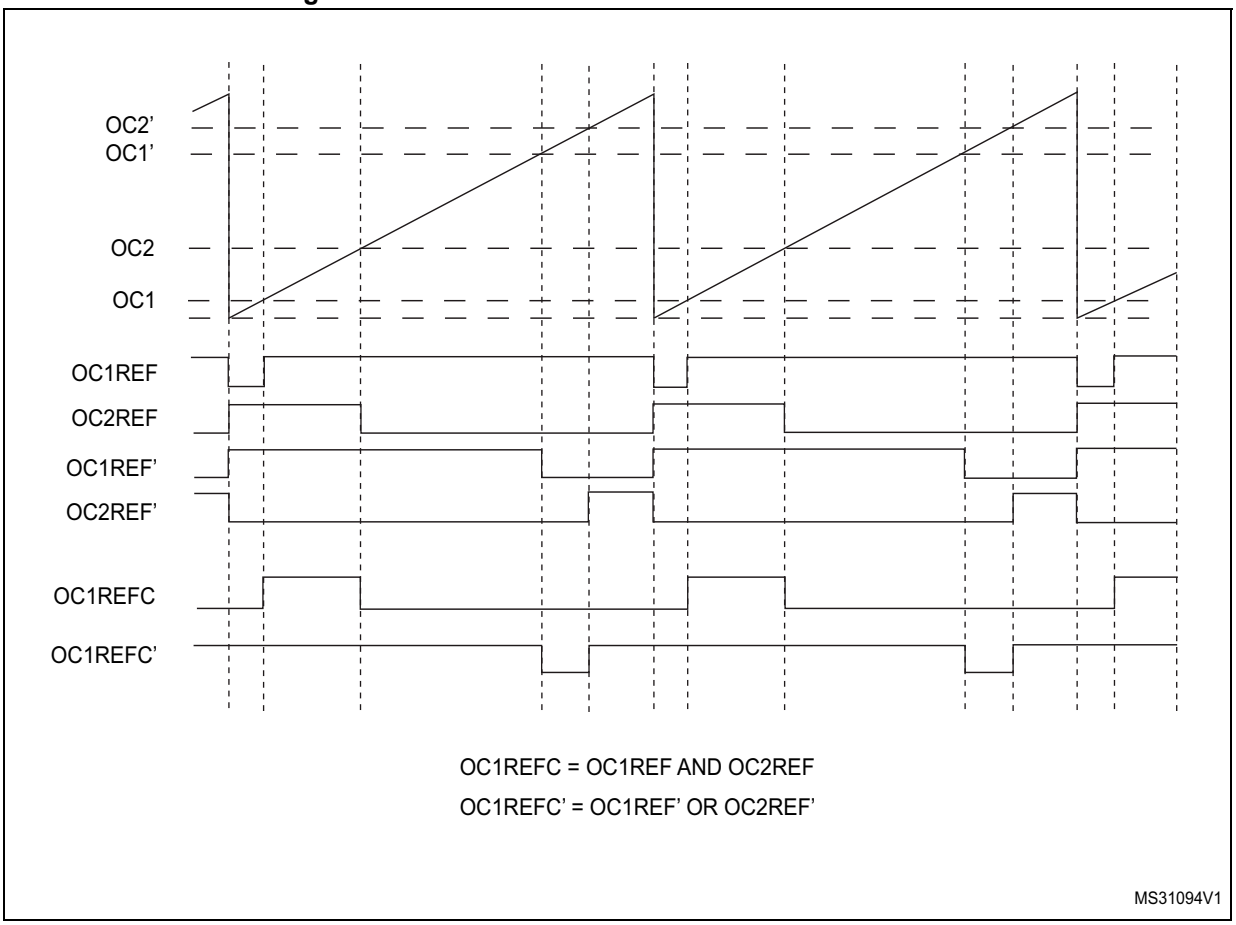

32.5.12 Complementary outputs and dead-time insertion

The TIM15/TIM16/TIM17 general-purpose timers can output one complementary signal and manage the switching-off and switching-on of the outputs.

This time is generally known as dead-time and it has to be adjusted depending on the devices that are connected to the outputs and their characteristics (intrinsic delays of level-shifters, delays due to power switches...)

The polarity of the outputs (main output OCx or complementary OCxN) can be selected independently for each output. This is done by writing to the CCxP and CCxNP bits in the TIMx_CCER register.

The complementary signals OCx and OCxN are activated by a combination of several control bits: the CCxE and CCxNE bits in the TIMx_CCER register and the MOE, OISx, OISxN, OSSI and OSSR bits in the TIMx_BDTR and TIMx_CR2 registers. Refer to *Table 208: Output control bits for complementary OCx and OCxN channels with break feature (TIM16/17) on page 1159* for more details. In particular, the dead-time is activated when switching to the idle state (MOE falling down to 0).

Dead-time insertion is enabled by setting both CCxE and CCxNE bits, and the MOE bit if the break circuit is present. There is one 10-bit dead-time generator for each channel. From a

reference waveform OCxREF, it generates 2 outputs OCx and OCxN. If OCx and OCxN are active high:

- The OCx output signal is the same as the reference signal except for the rising edge, which is delayed relative to the reference rising edge.
- The OCxN output signal is the opposite of the reference signal except for the rising edge, which is delayed relative to the reference falling edge.

If the delay is greater than the width of the active output (OCx or OCxN) then the corresponding pulse is not generated.

The following figures show the relationships between the output signals of the dead-time generator and the reference signal OCxREF. (we suppose CCxP=0, CCxNP=0, MOE=1, CCxE=1 and CCxNE=1 in these examples)

Figure 355. Complementary output with dead-time insertion.

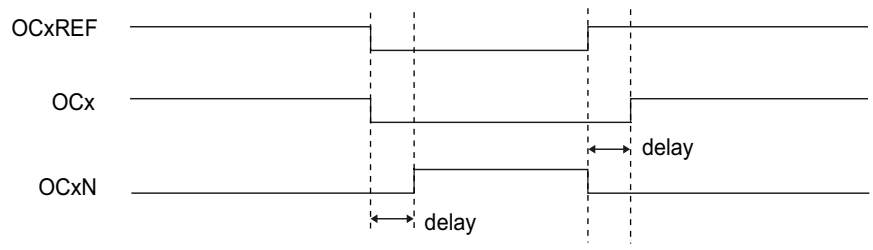

Figure 356. Dead-time waveforms with delay greater than the negative pulse.

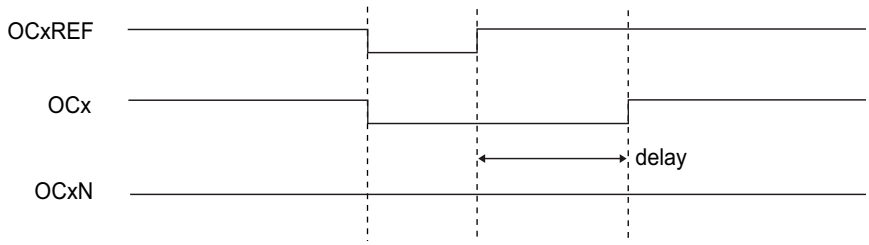

Figure 357. Dead-time waveforms with delay greater than the positive pulse.

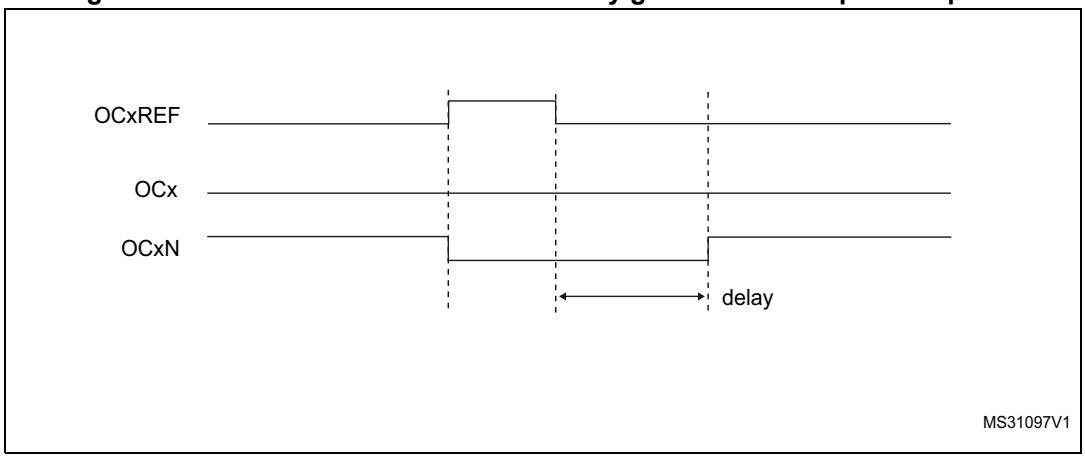

The dead-time delay is the same for each of the channels and is programmable with the DTG bits in the TIMx_BDTR register. Refer to *Section 32.7.14: TIMx break and dead-time register (TIMx_BDTR)(x = 16 to 17) on page 1162* for delay calculation.

Re-directing OCxREF to OCx or OCxN

In output mode (forced, output compare or PWM), OCxREF can be re-directed to the OCx output or to OCxN output by configuring the CCxE and CCxNE bits in the TIMx_CCER register.

This allows a specific waveform to be sent (such as PWM or static active level) on one output while the complementary remains at its inactive level. Other alternative possibilities are to have both outputs at inactive level or both outputs active and complementary with dead-time.

Note: When only OCxN is enabled (CCxE=0, CCxNE=1), it is not complemented and becomes active as soon as OCxREF is high. For example, if CCxNP=0 then OCxN=OCxRef. On the other hand, when both OCx and OCxN are enabled (CCxE=CCxNE=1) OCx becomes active when OCxREF is high whereas OCxN is complemented and becomes active when OCxREF is low.

32.5.13 Using the break function

The purpose of the break function is to protect power switches driven by PWM signals generated with the TIM15/TIM16/TIM17 timers. The break input is usually connected to fault outputs of power stages and 3-phase inverters. When activated, the break circuitry shuts down the PWM outputs and forces them to a predefined safe state.

The break channel gathers both system-level fault (clock failure, parity error,...) and application fault (from input pins and built-in comparator), and can force the outputs to a predefined level (either active or inactive) after a deadtime duration.

The output enable signal and output levels during break are depending on several control bits:

- the MOE bit in TIMx_BDTR register allows to enable /disable the outputs by software and is reset in case of break or break2 event.
- the OSSI bit in the TIMx_BDTR register defines whether the timer controls the output in inactive state or releases the control to the GPIO controller (typically to have it in Hi-Z mode)
- the OISx and OISxN bits in the TIMx_CR2 register which are setting the output shut-down level, either active or inactive. The OCx and OCxN outputs cannot be set both to active level at a given time, whatever the OISx and OISxN values. Refer to *Table 206: Output control bits for complementary OCx and OCxN channels with break feature (TIM15) on page 1138* for more details.

When exiting from reset, the break circuit is disabled and the MOE bit is low. The break function is enabled by setting the BKE bit in the TIMx_BDTR register. The break input polarity can be selected by configuring the BKP bit in the same register. BKE and BKP can be modified at the same time. When the BKE and BKP bits are written, a delay of 1 APB clock cycle is applied before the writing is effective. Consequently, it is necessary to wait 1 APB clock period to correctly read back the bit after the write operation.

Because MOE falling edge can be asynchronous, a resynchronization circuit has been inserted between the actual signal (acting on the outputs) and the synchronous control bit (accessed in the TIMx_BDTR register). It results in some delays between the asynchronous and the synchronous signals. In particular, if MOE is set to 1 whereas it was low, a delay must be inserted (dummy instruction) before reading it correctly. This is because the write acts on the asynchronous signal whereas the read reflects the synchronous signal.

The break can be generated from multiple sources which can be individually enabled and with programmable edge sensitivity, using the TIMx_OR2 register.

The sources for break (BRK) channel are:

- An external source connected to one of the BKIN pin (as per selection done in the AFIO controller), with polarity selection and optional digital filtering
- An internal source:
  - the Cortex®-M4 LOCKUP output
  - the PVD output
  - the SRAM parity error signal
  - a flash ECC error
  - a clock failure event generated by the CSS detector
  - the output from a comparator, with polarity selection and optional digital filtering
  - the analog watchdog output of the DFSDM1 peripheral

Break events can also be generated by software using BG bit in the TIMx_EGR register.

All sources are ORed before entering the timer BRK inputs, as per *Figure 358* below.

Figure 358. Break circuitry overview

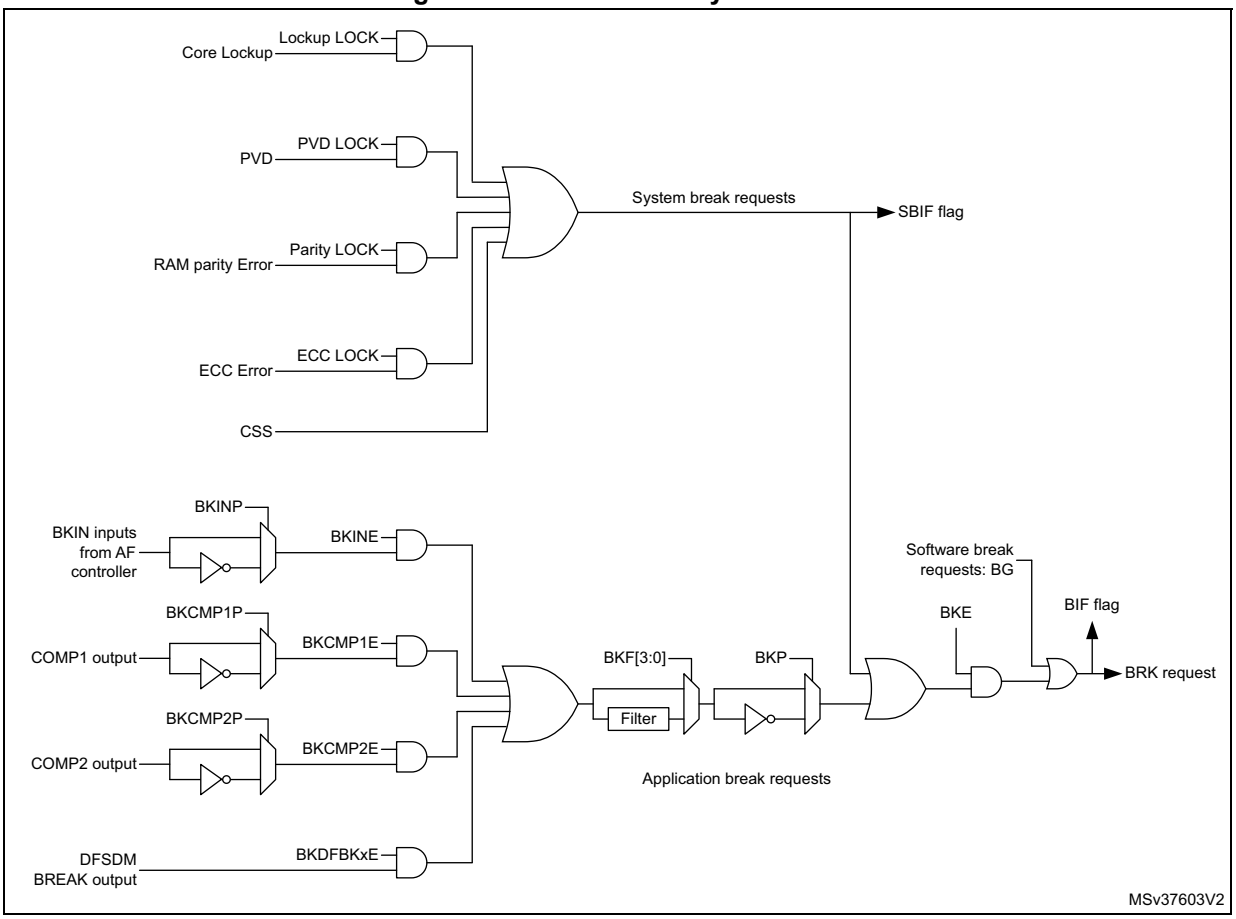

When a break occurs (selected level on the break input):

- The MOE bit is cleared asynchronously, putting the outputs in inactive state, idle state or even releasing the control to the AFIO controller (selected by the OSSI bit). This feature functions even if the MCU oscillator is off.
- Each output channel is driven with the level programmed in the OISx bit in the TIMx_CR2 register as soon as MOE=0. If OSSI=0, the timer releases the output control (taken over by the AFIO controller) else the enable output remains high.
- When complementary outputs are used:
  - The outputs are first put in reset state inactive state (depending on the polarity). This is done asynchronously so that it works even if no clock is provided to the timer.
  - If the timer clock is still present, then the dead-time generator is reactivated in order to drive the outputs with the level programmed in the OISx and OISxN bits after a dead-time. Even in this case, OCx and OCxN cannot be driven to their

active level together. Note that because of the resynchronization on MOE, the dead-time duration is a bit longer than usual (around 2 ck_tim clock cycles).

  – If OSSI=0 then the timer releases the enable outputs (taken over by the AFIO controller which forces a Hi-Z state) else the enable outputs remain or become high as soon as one of the CCxE or CCxNE bits is high.

- The break status flag (BIF bit in the TIMx_SR register) is set. An interrupt can be generated if the BIE bit in the TIMx_DIER register is set.
- If the AOE bit in the TIMx_BDTR register is set, the MOE bit is automatically set again at the next update event UEV. This can be used to perform a regulation, for instance. Else, MOE remains low until it is written with 1 again. In this case, it can be used for security and the break input can be connected to an alarm from power drivers, thermal sensors or any security components.

Note: The break inputs is acting on level. Thus, the MOE cannot be set while the break input is active (neither automatically nor by software). In the meantime, the status flag BIF cannot be cleared.

The break can be generated by the BRK input which has a programmable polarity and an enable bit BKE in the TIMx_BDTR Register.

In addition to the break input and the output management, a write protection has been implemented inside the break circuit to safeguard the application. It allows the configuration of several parameters to be freezed (dead-time duration, OCx/OCxN polarities and state when disabled, OCxM configurations, break enable and polarity). The protection can be selected among 3 levels with the LOCK bits in the TIMx_BDTR register. Refer to *Section 32.7.14: TIMx break and dead-time register (TIMx_BDTR)(x = 16 to 17) on page 1162*. The LOCK bits can be written only once after an MCU reset.

The *Figure 359* shows an example of behavior of the outputs in response to a break.

Figure 359. Output behavior in response to a break

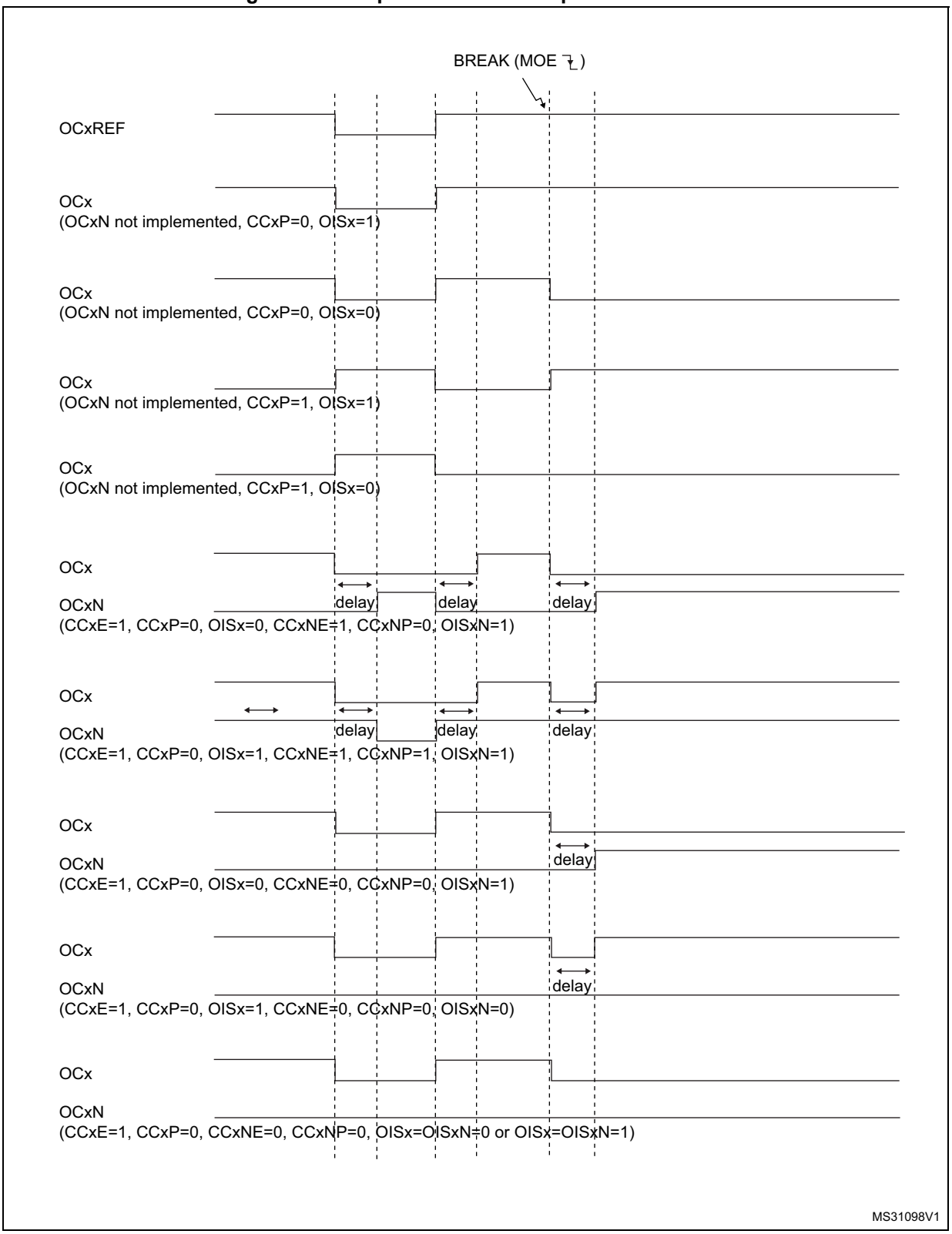

32.5.14 One-pulse mode

One-pulse mode (OPM) is a particular case of the previous modes. It allows the counter to be started in response to a stimulus and to generate a pulse with a programmable length after a programmable delay.

Starting the counter can be controlled through the slave mode controller. Generating the waveform can be done in output compare mode or PWM mode. One-pulse mode is selected by setting the OPM bit in the TIMx_CR1 register. This makes the counter stop automatically at the next update event UEV.

A pulse can be correctly generated only if the compare value is different from the counter initial value. Before starting (when the timer is waiting for the trigger), the configuration must be:

- CNT < CCRx ≤ ARR (in particular, 0 < CCRx)

Figure 360. Example of one pulse mode.

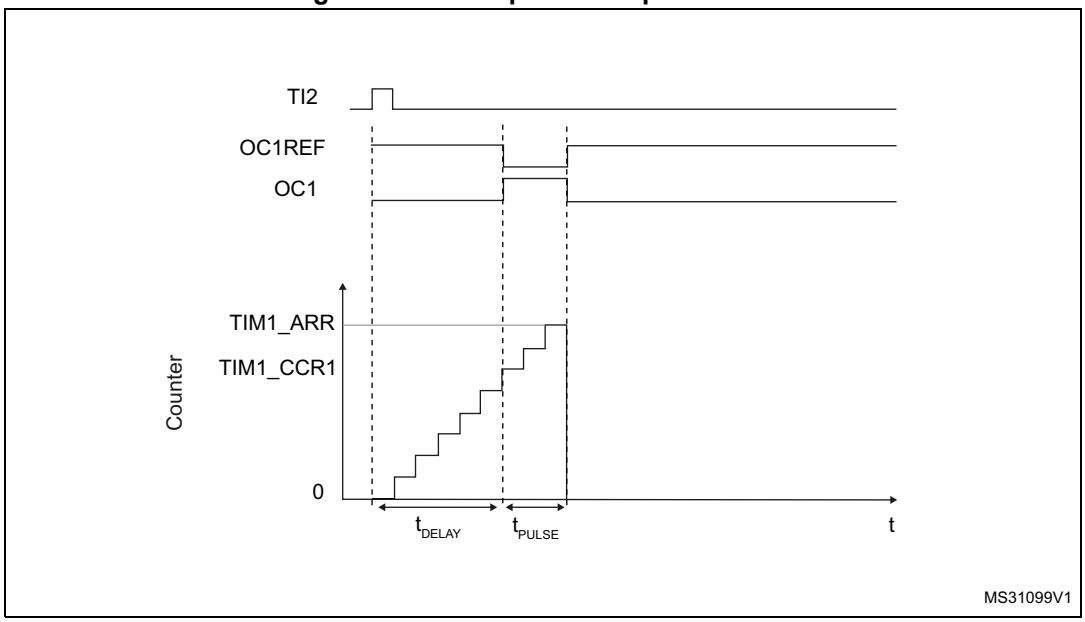

For example one may want to generate a positive pulse on OC1 with a length of t_{PULSE} and after a delay of t_{DELAY} as soon as a positive edge is detected on the TI2 input pin.

Let's use TI2FP2 as trigger 1:

1. Map TI2FP2 to TI2 by writing CC2S='01' in the TIMx_CCMR1 register.
2. TI2FP2 must detect a rising edge, write CC2P='0' and CC2NP='0' in the TIMx_CCER register.
3. Configure TI2FP2 as trigger for the slave mode controller (TRGI) by writing TS='110' in the TIMx_SMCR register.
4. TI2FP2 is used to start the counter by writing SMS to '110' in the TIMx_SMCR register (trigger mode).

The OPM waveform is defined by writing the compare registers (taking into account the clock frequency and the counter prescaler).

- The t_{DELAY} is defined by the value written in the TIMx_CCR1 register.
- The t_{PULSE} is defined by the difference between the auto-reload value and the compare value (TIMx_ARR - TIMx_CCR1).
- Let's say one want to build a waveform with a transition from '0' to '1' when a compare match occurs and a transition from '1' to '0' when the counter reaches the auto-reload value. To do this PWM mode 2 must be enabled by writing OC1M=111 in the TIMx_CCMR1 register. Optionally the preload registers can be enabled by writing OC1PE='1' in the TIMx_CCMR1 register and ARPE in the TIMx_CR1 register. In this case one has to write the compare value in the TIMx_CCR1 register, the auto-reload value in the TIMx_ARR register, generate an update by setting the UG bit and wait for external trigger event on TI2. CC1P is written to '0' in this example.

Since only 1 pulse is needed, a 1 must be written in the OPM bit in the TIMx_CR1 register to stop the counter at the next update event (when the counter rolls over from the auto-reload value back to 0).

Particular case: OCx fast enable

In One-pulse mode, the edge detection on TIx input set the CEN bit which enables the counter. Then the comparison between the counter and the compare value makes the output toggle. But several clock cycles are needed for these operations and it limits the minimum delay t_{DELAY} min we can get.

If one wants to output a waveform with the minimum delay, the OCxFE bit can be set in the TIMx_CCMRx register. Then OCxRef (and OCx) are forced in response to the stimulus, without taking in account the comparison. Its new level is the same as if a compare match had occurred. OCxFE acts only if the channel is configured in PWM1 or PWM2 mode.

32.5.15 Retriggerable one pulse mode (OPM) (TIM15 only)

This mode allows the counter to be started in response to a stimulus and to generate a pulse with a programmable length, but with the following differences with Non-retriggerable one pulse mode described in *Section 32.5.14*:

- The pulse starts as soon as the trigger occurs (no programmable delay)
- The pulse is extended if a new trigger occurs before the previous one is completed

The timer must be in Slave mode, with the bits SMS[3:0] = ‘1000’ (Combined Reset + trigger mode) in the TIMx_SMCR register, and the OCxM[3:0] bits set to ‘1000’ or ‘1001’ for Retrigerrable OPM mode 1 or 2.

If the timer is configured in Up-counting mode, the corresponding CCRx must be set to 0 (the ARR register sets the pulse length). If the timer is configured in Down-counting mode, CCRx must be above or equal to ARR.

Note: The OCxM[3:0] and SMS[3:0] bit fields are split into two parts for compatibility reasons, the most significant bit are not contiguous with the 3 least significant ones.

This mode must not be used with center-aligned PWM modes. It is mandatory to have CMS[1:0] = 00 in TIMx_CR1.

Figure 361. Retriggerable one pulse mode

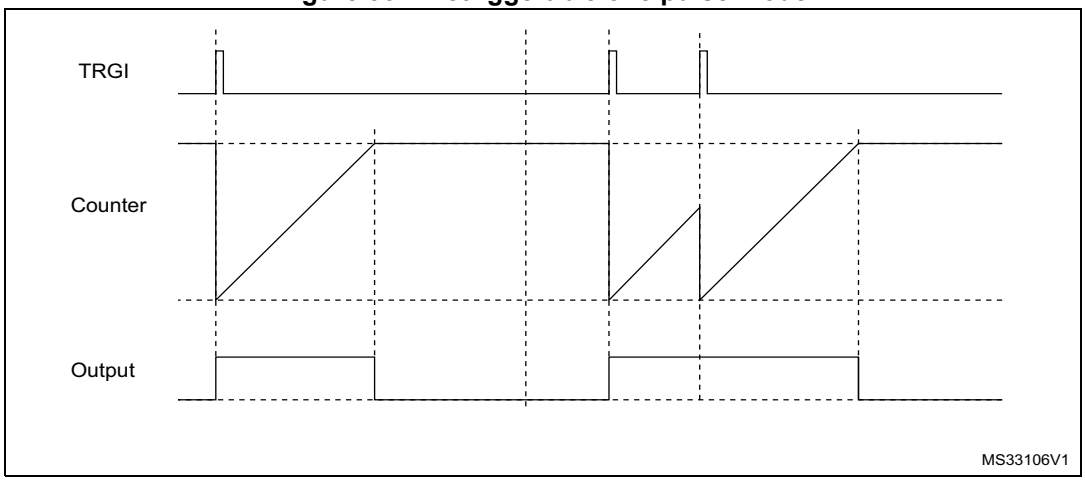

32.5.16 UIF bit remapping

The IUFREMAP bit in the TIMx_CR1 register forces a continuous copy of the Update Interrupt Flag UIF into bit 31 of the timer counter register (TIMxCNT[31]). This allows both the counter value and a potential roll-over condition signaled by the UIFCPY flag, to be atomically read. In particular cases, it can ease the calculations by avoiding race conditions

caused for instance by a processing shared between a background task (counter reading) and an interrupt (Update Interrupt).

There is no latency between the assertions of the UIF and UIFCPY flags.

32.5.17 Timer input XOR function (TIM15 only)

The TI1S bit in the TIMx_CR2 register, allows the input filter of channel 1 to be connected to the output of a XOR gate, combining the two input pins TIMx_CH1 and TIMx_CH2.

The XOR output can be used with all the timer input functions such as trigger or input capture. It is useful for measuring the interval between the edges on two input signals, as shown in *Figure 362*.

Figure 362. Measuring time interval between edges on 2 signals

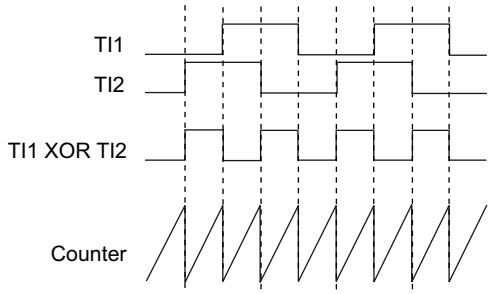

32.5.18 External trigger synchronization (TIM15 only)

The TIM timers are linked together internally for timer synchronization or chaining.

The TIM15 timer can be synchronized with an external trigger in several modes: Reset mode, Gated mode and Trigger mode.

Slave mode: Reset mode

The counter and its prescaler can be reinitialized in response to an event on a trigger input. Moreover, if the URS bit from the TIMx_CR1 register is low, an update event UEV is generated. Then all the preloaded registers (TIMx_ARR, TIMx_CCRx) are updated.

In the following example, the upcounter is cleared in response to a rising edge on TI1 input:

1. Configure the channel 1 to detect rising edges on TI1. Configure the input filter duration (in this example, we do not need any filter, so we keep IC1F=0000). The capture prescaler is not used for triggering, so it does not need to be configured. The CC1S bits select the input capture source only, CC1S = 01 in the TIMx_CCMR1 register. Write CC1P=’0’ and CC1NP=’0’ in the TIMx_CCER register to validate the polarity (and detect rising edges only).
2. Configure the timer in reset mode by writing SMS=100 in TIMx_SMCR register. Select TI1 as the input source by writing TS=101 in TIMx_SMCR register.
3. Start the counter by writing CEN=1 in the TIMx_CR1 register.

The counter starts counting on the internal clock, then behaves normally until TI1 rising edge. When TI1 rises, the counter is cleared and restarts from 0. In the meantime, the trigger flag is set (TIF bit in the TIMx_SR register) and an interrupt request, or a DMA request can be sent if enabled (depending on the TIE and TDE bits in TIMx_DIER register).

The following figure shows this behavior when the auto-reload register TIMx_ARR=0x36. The delay between the rising edge on TI1 and the actual reset of the counter is due to the resynchronization circuit on TI1 input.

Figure 363. Control circuit in reset mode

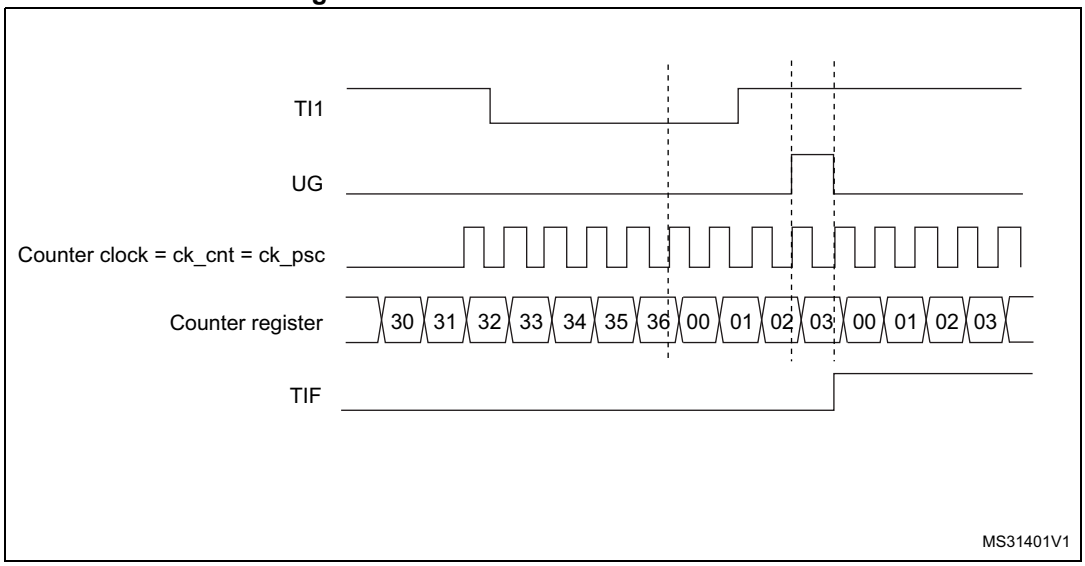

Slave mode: Gated mode

The counter can be enabled depending on the level of a selected input.

In the following example, the upcounter counts only when TI1 input is low:

1. Configure the channel 1 to detect low levels on TI1. Configure the input filter duration (in this example, we do not need any filter, so we keep IC1F=0000). The capture prescaler is not used for triggering, so it does not need to be configured. The CC1S bits select the input capture source only, CC1S=01 in TIMx_CCMR1 register. Write CC1P=1 and CC1NP = '0' in the TIMx_CCER register to validate the polarity (and detect low level only).
2. Configure the timer in gated mode by writing SMS=101 in TIMx_SMCR register. Select TI1 as the input source by writing TS=101 in TIMx_SMCR register.
3. Enable the counter by writing CEN=1 in the TIMx_CR1 register (in gated mode, the counter doesn't start if CEN=0, whatever is the trigger input level).

The counter starts counting on the internal clock as long as TI1 is low and stops as soon as TI1 becomes high. The TIF flag in the TIMx_SR register is set both when the counter starts or stops.

The delay between the rising edge on TI1 and the actual stop of the counter is due to the resynchronization circuit on TI1 input.

Figure 364. Control circuit in gated mode

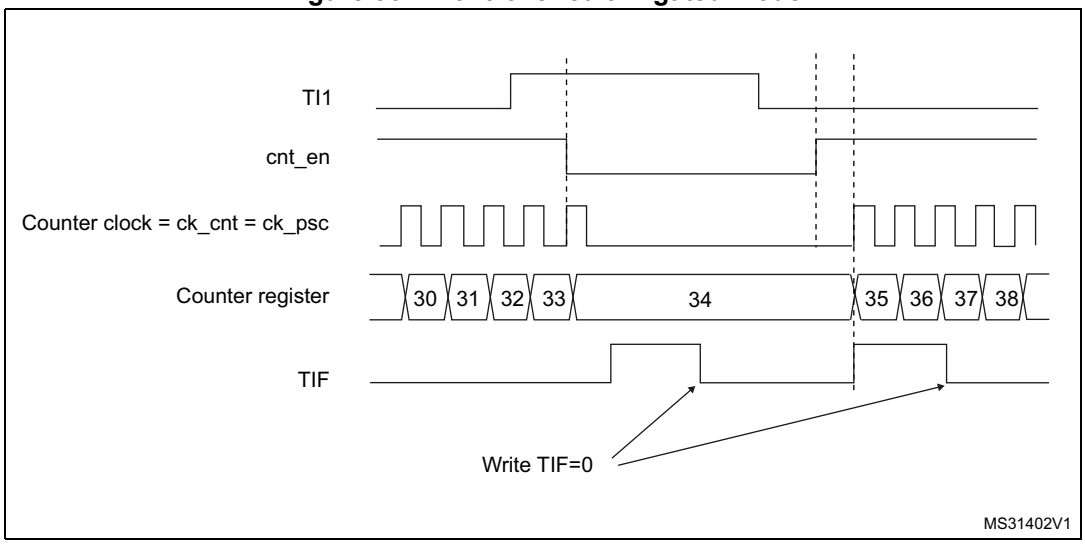

Slave mode: Trigger mode

The counter can start in response to an event on a selected input.

In the following example, the upcounter starts in response to a rising edge on TI2 input:

1. Configure the channel 2 to detect rising edges on TI2. Configure the input filter duration (in this example, we do not need any filter, so we keep IC2F=0000). The capture prescaler is not used for triggering, so it does not need to be configured. The CC2S bits are configured to select the input capture source only, CC2S=01 in TIMx_CCMR1 register. Write CC2P=’1’ and CC2NP=’0’ in the TIMx_CCER register to validate the polarity (and detect low level only).
2. Configure the timer in trigger mode by writing SMS=110 in the TIMx_SMCR register. Select TI2 as the input source by writing TS=110 in the TIMx_SMCR register.

When a rising edge occurs on TI2, the counter starts counting on the internal clock and the TIF flag is set.

The delay between the rising edge on TI2 and the actual start of the counter is due to the resynchronization circuit on TI2 input.

Figure 365. Control circuit in trigger mode

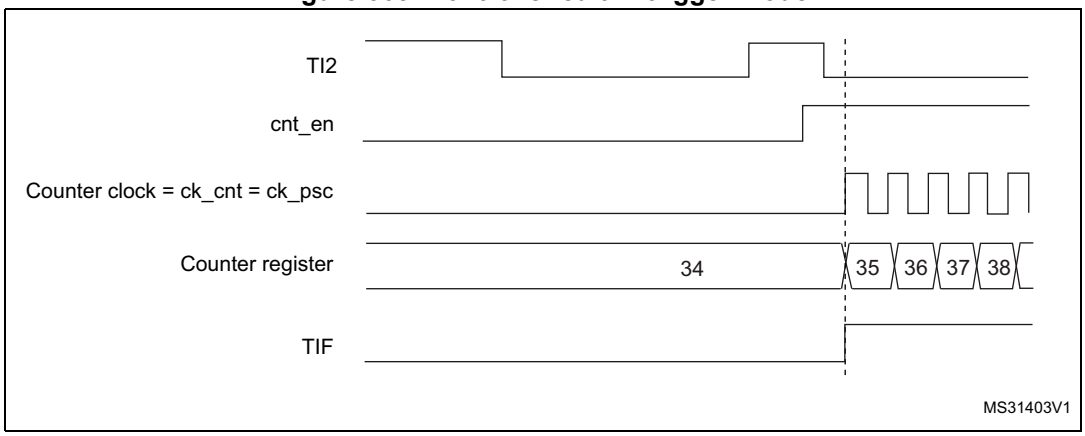

32.5.19 Slave mode – combined reset + trigger mode

In this case, a rising edge of the selected trigger input (TRGI) reinitializes the counter, generates an update of the registers, and starts the counter.

This mode is used for one-pulse mode.

32.5.20 DMA burst mode

The TIMx timers have the capability to generate multiple DMA requests on a single event. The main purpose is to be able to re-program several timer registers multiple times without software overhead, but it can also be used to read several registers in a row, at regular intervals.

The DMA controller destination is unique and must point to the virtual register TIMx_DMAR. On a given timer event, the timer launches a sequence of DMA requests (burst). Each write into the TIMx_DMAR register is actually redirected to one of the timer registers.

The DBL[4:0] bits in the TIMx_DCR register set the DMA burst length. The timer recognizes a burst transfer when a read or a write access is done to the TIMx_DMAR address), i.e. the number of transfers (either in half-words or in bytes).

The DBA[4:0] bits in the TIMx_DCR registers define the DMA base address for DMA transfers (when read/write access are done through the TIMx_DMAR address). DBA is defined as an offset starting from the address of the TIMx_CR1 register.

Example:

00000: TIMx_CR1,

00001: TIMx_CR2,

00010: TIMx_SMCR,

For example, the timer DMA burst feature could be used to update the contents of the CCRx registers (x = 2, 3, 4) on an update event, with the DMA transferring half words into the CCRx registers.

This is done in the following steps:

1. Configure the corresponding DMA channel as follows:
   - DMA channel peripheral address is the DMAR register address
   - DMA channel memory address is the address of the buffer in the RAM containing the data to be transferred by DMA into the CCRx registers.
   - Number of data to transfer = 3 (See note below).
   - Circular mode disabled.
2. Configure the DCR register by configuring the DBA and DBL bit fields as follows: DBL = 3 transfers, DBA = 0xE.
3. Enable the TIMx update DMA request (set the UDE bit in the DIER register).
4. Enable TIMx
5. Enable the DMA channel

This example is for the case where every CCRx register is to be updated once. If every CCRx register is to be updated twice for example, the number of data to transfer should be 6. Let's take the example of a buffer in the RAM containing data1, data2, data3, data4, data5 and data6. The data is transferred to the CCRx registers as follows: on the first update DMA request, data1 is transferred to CCR2, data2 is transferred to CCR3, data3 is transferred to CCR4 and on the second update DMA request, data4 is transferred to CCR2, data5 is transferred to CCR3 and data6 is transferred to CCR4.

Note: A null value can be written to the reserved registers.

32.5.21 Timer synchronization (TIM15)

The TIMx timers are linked together internally for timer synchronization or chaining. Refer to *Section 31.3.19: Timer synchronization* for details.

Note: The clock of the slave peripherals (timer, ADC, ...) receiving the TRGO or the TRGO2 signals must be enabled prior to receive events from the master timer, and the clock frequency (prescaler) must not be changed on-the-fly while triggers are received from the master timer.

32.5.22 Debug mode

When the microcontroller enters debug mode (Cortex®-M4 core halted), the TIMx counter either continues to work normally or stops, depending on DBG_TIMx_STOP configuration bit in DBG module. For more details, refer to *Section 48.16.2: Debug support for timers, RTC, watchdog, bxCAN and I^2C*.

For safety purposes, when the counter is stopped (DBG_TIMx_STOP = 1), the outputs are disabled (as if the MOE bit was reset). The outputs can either be forced to an inactive state (OSSI bit = 1), or have their control taken over by the GPIO controller (OSSI bit = 0) to force them to Hi-Z.

32.6 TIM15 registers

Refer to *Section 1.2* for a list of abbreviations used in register descriptions.

The peripheral registers can be accessed by half-words (16-bit) or words (32-bit).

32.6.1 TIM15 control register 1 (TIM15_CR1)

Address offset: 0x00

Reset value: 0x0000

15	14	13	12	11	10	9	8	7	6	5	4	3	2	1	0
Res.	Res.	Res.	Res.	UIFRE MAP	Res.	CKD[1:0]		ARPE	Res.	Res.	Res.	OPM	URS	UDIS	CEN
				rw		rw	rw	rw				rw	rw	rw	rw

Bits 15:12 Reserved, must be kept at reset value.

Bit 11 **UIFREMAP**: UIF status bit remapping

0: No remapping. UIF status bit is not copied to TIMx_CNT register bit 31.
1: Remapping enabled. UIF status bit is copied to TIMx_CNT register bit 31.

Bit 10 Reserved, must be kept at reset value.

Bits 9:8 **CKD[1:0]**: Clock division

This bitfield indicates the division ratio between the timer clock (CK_INT) frequency and the dead-time and sampling clock (t_{DTS}) used by the dead-time generators and the digital filters (TIx)

00: $t_{DTS} = t_{CK_INT}$
01: $t_{DTS} = 2*t_{CK_INT}$
10: $t_{DTS} = 4*t_{CK_INT}$
11: Reserved, do not program this value

Bit 7 **ARPE**: Auto-reload preload enable

0: TIMx_ARR register is not buffered
1: TIMx_ARR register is buffered

Bits 6:4 Reserved, must be kept at reset value.

Bit 3 **OPM**: One-pulse mode

0: Counter is not stopped at update event
1: Counter stops counting at the next update event (clearing the bit CEN)

Bit 2 **URS**: Update request source

This bit is set and cleared by software to select the UEV event sources.

0: Any of the following events generate an update interrupt if enabled. These events can be:

- Counter overflow/underflow
- Setting the UG bit
- Update generation through the slave mode controller

1: Only counter overflow/underflow generates an update interrupt if enabled

Bit 1 **UDIS**: Update disable

This bit is set and cleared by software to enable/disable UEV event generation.

0: UEV enabled. The Update (UEV) event is generated by one of the following events:

- Counter overflow/underflow
- Setting the UG bit
- Update generation through the slave mode controller

Buffered registers are then loaded with their preload values.

1: UEV disabled. The Update event is not generated, shadow registers keep their value (ARR, PSC, CCRx). However the counter and the prescaler are reinitialized if the UG bit is set or if a hardware reset is received from the slave mode controller.

Bit 0 **CEN**: Counter enable

0: Counter disabled

1: Counter enabled

Note: External clock and gated mode can work only if the CEN bit has been previously set by software. However trigger mode can set the CEN bit automatically by hardware.

32.6.2 TIM15 control register 2 (TIM15_CR2)

Address offset: 0x04

Reset value: 0x0000

15	14	13	12	11	10	9	8	7	6	5	4	3	2	1	0
Res.	Res.	Res.	Res.	Res.	OIS2	OIS1N	OIS1	TI1S	MMS[2:0]			CCDS	CCUS	Res.	CCPC
					rw	rw	rw	rw	rw	rw	rw	rw	rw		rw

Bits 15:11 Reserved, must be kept at reset value.

Bit 10 **OIS2:** Output idle state 2 (OC2 output)

0: OC2=0 when MOE=0

1: OC2=1 when MOE=0

Note: This bit cannot be modified as long as LOCK level 1, 2 or 3 has been programmed (LOCK bits in the TIM15_BDTR register).

Bit 9 **OIS1N**: Output Idle state 1 (OC1N output)

0: OC1N=0 after a dead-time when MOE=0

1: OC1N=1 after a dead-time when MOE=0

Note: This bit can not be modified as long as LOCK level 1, 2 or 3 has been programmed (LOCK bits in TIM15_BDTR register).

Bit 8 **OIS1**: Output Idle state 1 (OC1 output)

0: OC1=0 (after a dead-time if OC1N is implemented) when MOE=0

1: OC1=1 (after a dead-time if OC1N is implemented) when MOE=0

Note: This bit can not be modified as long as LOCK level 1, 2 or 3 has been programmed (LOCK bits in TIM15_BDTR register).

Bit 7 **TI1S**: TI1 selection

0: The TIMx_CH1 pin is connected to TI1 input

1: The TIMx_CH1, CH2 pins are connected to the TI1 input (XOR combination)

Bits 6:4 **MMS[2:0]**: Master mode selection

These bits allow to select the information to be sent in master mode to slave timers for synchronization (TRGO). The combination is as follows:

000: **Reset** - the UG bit from the TIMx_EGR register is used as trigger output (TRGO). If the reset is generated by the trigger input (slave mode controller configured in reset mode) then the signal on TRGO is delayed compared to the actual reset.

001: **Enable** - the Counter Enable signal CNT_EN is used as trigger output (TRGO). It is useful to start several timers at the same time or to control a window in which a slave timer is enable. The Counter Enable signal is generated by a logic AND between CEN control bit and the trigger input when configured in gated mode. When the Counter Enable signal is controlled by the trigger input, there is a delay on TRGO, except if the master/slave mode is selected (see the MSM bit description in TIMx_SMCR register).

010: **Update** - The update event is selected as trigger output (TRGO). For instance a master timer can then be used as a prescaler for a slave timer.

011: **Compare Pulse** - The trigger output send a positive pulse when the CC1IF flag is to be set (even if it was already high), as soon as a capture or a compare match occurred. (TRGO).

100: **Compare** - OC1REF signal is used as trigger output (TRGO).

101: **Compare** - OC2REF signal is used as trigger output (TRGO).

Bit 3 **CCDS**: Capture/compare DMA selection

0: CCx DMA request sent when CCx event occurs

1: CCx DMA requests sent when update event occurs

Bit 2 **CCUS**: Capture/compare control update selection

0: When capture/compare control bits are preloaded (CCPC=1), they are updated by setting the COMG bit only.

1: When capture/compare control bits are preloaded (CCPC=1), they are updated by setting the COMG bit or when an rising edge occurs on TRGI.

Note: This bit acts only on channels that have a complementary output.

Bit 1 Reserved, must be kept at reset value.

Bit 0 **CCPC**: Capture/compare preloaded control

0: CCxE, CCxNE and OCxM bits are not preloaded

1: CCxE, CCxNE and OCxM bits are preloaded, after having been written, they are updated only when a commutation event (COM) occurs (COMG bit set or rising edge detected on TRGI, depending on the CCUS bit).

Note: This bit acts only on channels that have a complementary output.

32.6.3 TIM15 slave mode control register (TIM15_SMCR)

Address offset: 0x08

Reset value: 0x0000 0000

31	30	29	28	27	26	25	24	23	22	21	20	19	18	17	16
Res.	Res.	Res.	Res.	Res.	Res.	Res.	Res.	Res.	Res.	Res.	Res.	Res.	Res.	Res.	SMS[3]
															rw

15	14	13	12	11	10	9	8	7	6	5	4	3	2	1	0
Res.	Res.	Res.	Res.	Res.	Res.	Res.	Res.	MSM	TS[2:0]			Res.	SMS[2:0]		
								rw	rw	rw	rw		rw	rw	rw

Bits 31:17 Reserved, must be kept at reset value.

Bits 15:8 Reserved, must be kept at reset value.

Bit 7 **MSM:** Master/slave mode

0: No action

1: The effect of an event on the trigger input (TRGI) is delayed to allow a perfect synchronization between the current timer and its slaves (through TRGO). It is useful if we want to synchronize several timers on a single external event.

Bits 6:4 **TS[2:0]:** Trigger selection

This bit field selects the trigger input to be used to synchronize the counter.

000: Internal Trigger 0 (ITR0)
001: Internal Trigger 1 (ITR1)
010: Internal Trigger 2 (ITR2)
011: Internal Trigger 3 (ITR3)
100: TI1 Edge Detector (TI1F_ED)
101: Filtered Timer Input 1 (TI1FP1)
110: Filtered Timer Input 2 (TI2FP2)

See *Table 205: TIMx Internal trigger connection on page 1128* for more details on ITRx meaning for each Timer.

Note: These bits must be changed only when they are not used (e.g. when SMS=000) to avoid wrong edge detections at the transition.

Bit 3 Reserved, must be kept at reset value.

Bits 16, 2, 1, 0 **SMS[3:0]:** Slave mode selection

When external signals are selected the active edge of the trigger signal (TRGI) is linked to the polarity selected on the external input (see Input Control register and Control Register description.

0000: Slave mode disabled - if CEN = '1' then the prescaler is clocked directly by the internal clock.

0001: Reserved

0010: Reserved

0011: Reserved

0100: Reset Mode - Rising edge of the selected trigger input (TRGI) reinitializes the counter and generates an update of the registers.

0101: Gated Mode - The counter clock is enabled when the trigger input (TRGI) is high. The counter stops (but is not reset) as soon as the trigger becomes low. Both start and stop of the counter are controlled.

0110: Trigger Mode - The counter starts at a rising edge of the trigger TRGI (but it is not reset). Only the start of the counter is controlled.

0111: External Clock Mode 1 - Rising edges of the selected trigger (TRGI) clock the counter.

1000: Combined reset + trigger mode - Rising edge of the selected trigger input (TRGI) reinitializes the counter, generates an update of the registers and starts the counter.

Other codes: reserved.

Note: The gated mode must not be used if TI1F_ED is selected as the trigger input (TS='100'). Indeed, TI1F_ED outputs 1 pulse for each transition on TI1F, whereas the gated mode checks the level of the trigger signal.

Note: The clock of the slave peripherals (timer, ADC, ...) receiving the TRGO or the TRGO2 signals must be enabled prior to receive events from the master timer, and the clock frequency (prescaler) must not be changed on-the-fly while triggers are received from the master timer.

Table 205. TIMx Internal trigger connection

Slave TIM	ITR0 (TS = 000)	ITR1 (TS = 001)	ITR2 (TS = 010)	ITR3 (TS = 011)
TIM15	TIM1	TIM3	TIM16 OC1	TIM17 OC1

32.6.4 TIM15 DMA/interrupt enable register (TIM15_DIER)

Address offset: 0x0C

Reset value: 0x0000

15	14	13	12	11	10	9	8	7	6	5	4	3	2	1	0
Res.	TDE	COMDE	Res.	Res.	CC2DE	CC1DE	UDE	BIE	TIE	COMIE	Res.	Res.	CC2IE	CC1IE	UIE
	rw	rw			rw	rw	rw	rw	rw	rw			rw	rw	rw

Bit 15 Reserved, must be kept at reset value.

Bit 14 **TDE**: Trigger DMA request enable

0: Trigger DMA request disabled

1: Trigger DMA request enabled

Bit 13 **COMDE**: COM DMA request enable

0: COM DMA request disabled

1: COM DMA request enabled

Bits 12:11 Reserved, must be kept at reset value.

Bit 10 **CC2DE**: Capture/Compare 2 DMA request enable
0: CC2 DMA request disabled
1: CC2 DMA request enabled

Bit 9 **CC1DE**: Capture/Compare 1 DMA request enable
0: CC1 DMA request disabled
1: CC1 DMA request enabled

Bit 8 **UDE**: Update DMA request enable
0: Update DMA request disabled
1: Update DMA request enabled

Bit 7 **BIE**: Break interrupt enable
0: Break interrupt disabled
1: Break interrupt enabled

Bit 6 **TIE**: Trigger interrupt enable
0: Trigger interrupt disabled
1: Trigger interrupt enabled

Bit 5 **COMIE:** COM interrupt enable
0: COM interrupt disabled
1: COM interrupt enabled

Bits 4:3 Reserved, must be kept at reset value.

Bit 2 **CC2IE**: Capture/Compare 2 interrupt enable
0: CC2 interrupt disabled
1: CC2 interrupt enabled

Bit 1 **CC1IE**: Capture/Compare 1 interrupt enable
0: CC1 interrupt disabled
1: CC1 interrupt enabled

Bit 0 **UIE**: Update interrupt enable
0: Update interrupt disabled
1: Update interrupt enabled

32.6.5 TIM15 status register (TIM15_SR)

Address offset: 0x10

Reset value: 0x0000

15	14	13	12	11	10	9	8	7	6	5	4	3	2	1	0
Res.	Res.	Res.	Res.	Res.	CC2OF	CC1OF	Res.	BIF	TIF	COMIF	Res.	Res.	CC2IF	CC1IF	UIF
					rc_w0	rc_w0		rc_w0	rc_w0	rc_w0			rc_w0	rc_w0	rc_w0

Bits 15:11 Reserved, must be kept at reset value.

Bit 10 **CC2OF**: Capture/Compare 2 overcapture flag

Refer to CC1OF description

Bit 9 **CC1OF**: Capture/Compare 1 overcapture flag

This flag is set by hardware only when the corresponding channel is configured in input capture mode. It is cleared by software by writing it to ‘0’.

0: No overcapture has been detected

1: The counter value has been captured in TIMx_CCR1 register while CC1IF flag was already set

Bit 8 Reserved, must be kept at reset value.

Bit 7 **BIF**: Break interrupt flag

This flag is set by hardware as soon as the break input goes active. It can be cleared by software if the break input is not active.

0: No break event occurred

1: An active level has been detected on the break input

Bit 6 **TIF**: Trigger interrupt flag

This flag is set by hardware on the TRG trigger event (active edge detected on TRGI input when the slave mode controller is enabled in all modes but gated mode, both edges in case gated mode is selected). It is set when the counter starts or stops when gated mode is selected. It is cleared by software.

0: No trigger event occurred

1: Trigger interrupt pending

Bit 5 **COMIF:** COM interrupt flag

This flag is set by hardware on a COM event (once the capture/compare control bits –CCxE, CCxNE, OCxM– have been updated). It is cleared by software.

0: No COM event occurred

1: COM interrupt pending

Bits 4:3 Reserved, must be kept at reset value.

Bit 2 **CC2IF**: Capture/Compare 2 interrupt flag

refer to CC1IF description

Bit 1 **CC1IF**: Capture/Compare 1 interrupt flag

This flag is set by hardware. It is cleared by software (input capture or output compare mode) or by reading the TIMx_CCR1 register (input capture mode only).

0: No compare match / No input capture occurred

1: A compare match or an input capture occurred

If channel CC1 is configured as output: this flag is set when the content of the counter TIMx_CNT matches the content of the TIMx_CCR1 register. When the content of TIMx_CCR1 is greater than the content of TIMx_ARR, the CC1IF bit goes high on the counter overflow (in up-counting and up/down-counting modes) or underflow (in down-counting mode). There are 3 possible options for flag setting in center-aligned mode, refer to the CMS bits in the TIMx_CR1 register for the full description.

If channel CC1 is configured as input: this bit is set when counter value has been captured in TIMx_CCR1 register (an edge has been detected on IC1, as per the edge sensitivity defined with the CC1P and CC1NP bits setting, in TIMx_CCER).

Bit 0 **UIF**: Update interrupt flag

This bit is set by hardware on an update event. It is cleared by software.

0: No update occurred.

1: Update interrupt pending. This bit is set by hardware when the registers are updated:

– At overflow regarding the repetition counter value (update if repetition counter = 0) and if the UDIS=0 in the TIMx_CR1 register.

– When CNT is reinitialized by software using the UG bit in TIMx_EGR register, if URS=0 and UDIS=0 in the TIMx_CR1 register.

– When CNT is reinitialized by a trigger event (refer to *Section 32.6.3: TIM15 slave mode control register (TIM15_SMCR)*), if URS=0 and UDIS=0 in the TIMx_CR1 register.

32.6.6 TIM15 event generation register (TIM15_EGR)

Address offset: 0x14

Reset value: 0x0000

15	14	13	12	11	10	9	8	7	6	5	4	3	2	1	0
Res.	Res.	Res.	Res.	Res.	Res.	Res.	Res.	BG	TG	COMG	Res.	Res.	CC2G	CC1G	UG
								w	w	rw			w	w	w

Bits 15:8 Reserved, must be kept at reset value.

Bit 7 **BG**: Break generation

This bit is set by software in order to generate an event, it is automatically cleared by hardware.

0: No action

1: A break event is generated. MOE bit is cleared and BIF flag is set. Related interrupt or DMA transfer can occur if enabled.

Bit 6 **TG**: Trigger generation

This bit is set by software in order to generate an event, it is automatically cleared by hardware.

0: No action

1: The TIF flag is set in TIMx_SR register. Related interrupt or DMA transfer can occur if enabled

Bit 5 **COMG:** Capture/Compare control update generation
This bit can be set by software, it is automatically cleared by hardware.
0: No action
1: When the CCPC bit is set, it is possible to update the CCxE, CCxNE and OCxM bits
Note: This bit acts only on channels that have a complementary output.

Bits 4:3 Reserved, must be kept at reset value.

Bit 2 **CC2G**: Capture/Compare 2 generation
Refer to CC1G description

Bit 1 **CC1G**: Capture/Compare 1 generation
This bit is set by software in order to generate an event, it is automatically cleared by hardware.
0: No action
1: A capture/compare event is generated on channel 1:
If channel CC1 is configured as output:
CC1IF flag is set, Corresponding interrupt or DMA request is sent if enabled.
If channel CC1 is configured as input:
The current value of the counter is captured in TIMx_CCR1 register. The CC1IF flag is set, the corresponding interrupt or DMA request is sent if enabled. The CC1OF flag is set if the CC1IF flag was already high.

Bit 0 **UG**: Update generation
This bit can be set by software, it is automatically cleared by hardware.
0: No action
1: Reinitialize the counter and generates an update of the registers. Note that the prescaler counter is cleared too (anyway the prescaler ratio is not affected).

32.6.7 TIM15 capture/compare mode register 1 [alternate] (TIM15_CCMR1)

Address offset: 0x18

Reset value: 0x0000 0000

The same register can be used for input capture mode (this section) or for output compare mode (next section). The direction of a channel is defined by configuring the corresponding CCxS bits. All the other bits of this register have a different function in input and in output mode.

Input capture mode:

31	30	29	28	27	26	25	24	23	22	21	20	19	18	17	16
Res.	Res.	Res.	Res.	Res.	Res.	Res.	Res.	Res.	Res.	Res.	Res.	Res.	Res.	Res.	Res.

15	14	13	12	11	10	9	8	7	6	5	4	3	2	1	0
IC2F[3:0]				IC2PSC[1:0]		CC2S[1:0]		IC1F[3:0]				IC1PSC[1:0]		CC1S[1:0]	
rw	rw	rw	rw	rw	rw	rw	rw	rw	rw	rw	rw	rw	rw	rw	rw

Bits 31:16 Reserved, must be kept at reset value.

Bits 15:12 **IC2F[3:0]**: Input capture 2 filter

Bits 11:10 **IC2PSC[1:0]**: Input capture 2 prescaler

Bits 9:8 **CC2S[1:0]**: Capture/Compare 2 selection

This bit-field defines the direction of the channel (input/output) as well as the used input.

00: CC2 channel is configured as output
01: CC2 channel is configured as input, IC2 is mapped on TI2
10: CC2 channel is configured as input, IC2 is mapped on TI1
11: CC2 channel is configured as input, IC2 is mapped on TRC. This mode is working only if an internal trigger input is selected through TS bit (TIMx_SMCR register)

Note: CC2S bits are writable only when the channel is OFF (CC2E = '0' in TIMx_CCER).

Bits 7:4 **IC1F[3:0]**: Input capture 1 filter

This bit-field defines the frequency used to sample TI1 input and the length of the digital filter applied to TI1. The digital filter is made of an event counter in which N consecutive events are needed to validate a transition on the output:

0000: No filter, sampling is done at f_{DTS}
0001: $f_{SAMPLING}=f_{CK_INT}$, N=2
0010: $f_{SAMPLING}=f_{CK_INT}$, N=4
0011: $f_{SAMPLING}=f_{CK_INT}$, N=8
0100: $f_{SAMPLING}=f_{DTS}/2$, N=6
0101: $f_{SAMPLING}=f_{DTS}/2$, N=8
0110: $f_{SAMPLING}=f_{DTS}/4$, N=6
0111: $f_{SAMPLING}=f_{DTS}/4$, N=8
1000: $f_{SAMPLING}=f_{DTS}/8$, N=6
1001: $f_{SAMPLING}=f_{DTS}/8$, N=8
1010: $f_{SAMPLING}=f_{DTS}/16$, N=5
1011: $f_{SAMPLING}=f_{DTS}/16$, N=6
1100: $f_{SAMPLING}=f_{DTS}/16$, N=8
1101: $f_{SAMPLING}=f_{DTS}/32$, N=5
1110: $f_{SAMPLING}=f_{DTS}/32$, N=6
1111: $f_{SAMPLING}=f_{DTS}/32$, N=8

Bits 3:2 **IC1PSC[1:0]**: Input capture 1 prescaler

This bit-field defines the ratio of the prescaler acting on CC1 input (IC1). The prescaler is reset as soon as CC1E='0' (TIMx_CCER register).

00: no prescaler, capture is done each time an edge is detected on the capture input
01: capture is done once every 2 events
10: capture is done once every 4 events
11: capture is done once every 8 events

Bits 1:0 **CC1S[1:0]**: Capture/Compare 1 Selection

This bit-field defines the direction of the channel (input/output) as well as the used input.

00: CC1 channel is configured as output
01: CC1 channel is configured as input, IC1 is mapped on TI1
10: CC1 channel is configured as input, IC1 is mapped on TI2
11: CC1 channel is configured as input, IC1 is mapped on TRC. This mode is working only if an internal trigger input is selected through TS bit (TIMx_SMCR register)

Note: CC1S bits are writable only when the channel is OFF (CC1E = '0' in TIMx_CCER).

32.6.8 TIM15 capture/compare mode register 1 [alternate] (TIM15_CCMR1)

Address offset: 0x18

Reset value: 0x0000 0000

The same register can be used for output compare mode (this section) or for input capture mode (previous section). The direction of a channel is defined by configuring the

corresponding CCxS bits. All the other bits of this register have a different function in input and in output mode.

Output compare mode:

31	30	29	28	27	26	25	24	23	22	21	20	19	18	17	16
Res.	Res.	Res.	Res.	Res.	Res.	Res.	OC2M [3]	Res.	Res.	Res.	Res.	Res.	Res.	Res.	OC1M [3]
							rw								rw

15	14	13	12	11	10	9	8	7	6	5	4	3	2	1	0
Res.	OC2M[2:0]			OC2 PE	OC2 FE	CC2S[1:0]		Res.	OC1M[2:0]			OC1 PE	OC1 FE	CC1S[1:0]	
	rw	rw	rw	rw	rw	rw	rw		rw	rw	rw	rw	rw	rw	rw

Bits 31:25 Reserved, must be kept at reset value.

Bits 23:17 Reserved, must be kept at reset value.

Bit 15 Reserved, must be kept at reset value.

Bits 24, 14:12 **OC2M[3:0]**: Output Compare 2 mode

Bit 11 **OC2PE**: Output Compare 2 preload enable

Bit 10 **OC2FE**: Output Compare 2 fast enable

Bits 9:8 **CC2S[1:0]**: Capture/Compare 2 selection

This bit-field defines the direction of the channel (input/output) as well as the used input.
00: CC2 channel is configured as output.
01: CC2 channel is configured as input, IC2 is mapped on TI2.
10: CC2 channel is configured as input, IC2 is mapped on TI1.
11: CC2 channel is configured as input, IC2 is mapped on TRC. This mode is working only if an internal trigger input is selected through the TS bit (TIMx_SMCR register)

Note: CC2S bits are writable only when the channel is OFF (CC2E = '0' in TIMx_CCER).

Bit 7 Reserved, must be kept at reset value.

Bits 16, 6:4 **OC1M[3:0]**: Output Compare 1 mode

These bits define the behavior of the output reference signal OC1REF from which OC1 and OC1N are derived. OC1REF is active high whereas OC1 and OC1N active level depends on CC1P and CC1NP bits.

0000: Frozen - The comparison between the output compare register TIMx_CCR1 and the counter TIMx_CNT has no effect on the outputs.

0001: Set channel 1 to active level on match. OC1REF signal is forced high when the counter TIMx_CNT matches the capture/compare register 1 (TIMx_CCR1).

0010: Set channel 1 to inactive level on match. OC1REF signal is forced low when the counter TIMx_CNT matches the capture/compare register 1 (TIMx_CCR1).

0011: Toggle - OC1REF toggles when TIMx_CNT=TIMx_CCR1.

0100: Force inactive level - OC1REF is forced low.

0101: Force active level - OC1REF is forced high.

0110: PWM mode 1 - Channel 1 is active as long as TIMx_CNT<TIMx_CCR1 else inactive. 0111: PWM mode 2 - Channel 1 is inactive as long as TIMx_CNT<TIMx_CCR1 else active.

1000: Retrigerrable OPM mode 1 - In up-counting mode, the channel is active until a trigger event is detected (on TRGI signal). Then, a comparison is performed as in PWM mode 1 and the channels becomes active again at the next update. In down-counting mode, the channel is inactive until a trigger event is detected (on TRGI signal). Then, a comparison is performed as in PWM mode 1 and the channels becomes inactive again at the next update.

1001: Retrigerrable OPM mode 2 - In up-counting mode, the channel is inactive until a trigger event is detected (on TRGI signal). Then, a comparison is performed as in PWM mode 2 and the channels becomes inactive again at the next update. In down-counting mode, the channel is active until a trigger event is detected (on TRGI signal). Then, a comparison is performed as in PWM mode 1 and the channels becomes active again at the next update.

1010: Reserved

1011: Reserved

1100: Combined PWM mode 1 - OC1REF has the same behavior as in PWM mode 1. OC1REFC is the logical OR between OC1REF and OC2REF.

1101: Combined PWM mode 2 - OC1REF has the same behavior as in PWM mode 2. OC1REFC is the logical AND between OC1REF and OC2REF.

1110: Reserved,

1111: Reserved,

Note: These bits can not be modified as long as LOCK level 3 has been programmed (LOCK bits in TIMx_BDTR register) and CC1S='00' (the channel is configured in output).

In PWM mode, the OCREF level changes only when the result of the comparison changes or when the output compare mode switches from "frozen" mode to "PWM" mode.

On channels that have a complementary output, this bit field is preloaded. If the CCPC bit is set in the TIMx_CR2 register then the OC1M active bits take the new value from the preloaded bits only when a COM event is generated.

Bit 3 **OC1PE**: Output Compare 1 preload enable

0: Preload register on TIMx_CCR1 disabled. TIMx_CCR1 can be written at anytime, the new value is taken in account immediately.

1: Preload register on TIMx_CCR1 enabled. Read/Write operations access the preload register. TIMx_CCR1 preload value is loaded in the active register at each update event.

Note: These bits can not be modified as long as LOCK level 3 has been programmed (LOCK bits in TIMx_BDTR register) and CC1S='00' (the channel is configured in output).

The PWM mode can be used without validating the preload register only in one pulse mode (OPM bit set in TIMx_CR1 register). Else the behavior is not guaranteed.

Bit 2 **OC1FE**: Output Compare 1 fast enable

This bit decreases the latency between a trigger event and a transition on the timer output. It must be used in one-pulse mode (OPM bit set in TIMx_CR1 register), to have the output pulse starting as soon as possible after the starting trigger.

0: CC1 behaves normally depending on counter and CCR1 values even when the trigger is ON. The minimum delay to activate CC1 output when an edge occurs on the trigger input is 5 clock cycles.

1: An active edge on the trigger input acts like a compare match on CC1 output. Then, OC is set to the compare level independently of the result of the comparison. Delay to sample the trigger input and to activate CC1 output is reduced to 3 clock cycles. OCFE acts only if the channel is configured in PWM1 or PWM2 mode.

Bits 1:0 **CC1S[1:0]**: Capture/Compare 1 selection

This bit-field defines the direction of the channel (input/output) as well as the used input.

00: CC1 channel is configured as output.

01: CC1 channel is configured as input, IC1 is mapped on TI1.

10: CC1 channel is configured as input, IC1 is mapped on TI2.

11: CC1 channel is configured as input, IC1 is mapped on TRC. This mode is working only if an internal trigger input is selected through TS bit (TIMx_SMCR register)

Note: CC1S bits are writable only when the channel is OFF (CC1E = '0' in TIMx_CCER).

32.6.9 TIM15 capture/compare enable register (TIM15_CCER)

Address offset: 0x20

Reset value: 0x0000

15	14	13	12	11	10	9	8	7	6	5	4	3	2	1	0
Res.	Res.	Res.	Res.	Res.	Res.	Res.	Res.	CC2NP	Res.	CC2P	CC2E	CC1NP	CC1NE	CC1P	CC1E
								rw		rw	rw	rw	rw	rw	rw

Bits 15:8 Reserved, must be kept at reset value.

Bit 7 **CC2NP**: Capture/Compare 2 complementary output polarity
Refer to CC1NP description

Bit 6 Reserved, must be kept at reset value.

Bit 5 **CC2P**: Capture/Compare 2 output polarity
Refer to CC1P description

Bit 4 **CC2E**: Capture/Compare 2 output enable
Refer to CC1E description

Bit 3 **CC1NP**: Capture/Compare 1 complementary output polarity

CC1 channel configured as output:

0: OC1N active high

1: OC1N active low

CC1 channel configured as input:

This bit is used in conjunction with CC1P to define the polarity of TI1FP1 and TI2FP1. Refer to CC1P description.

Note: This bit is not writable as soon as LOCK level 2 or 3 has been programmed (LOCK bits in TIMx_BDTR register) and CC1S="00" (the channel is configured in output).

On channels that have a complementary output, this bit is preloaded. If the CCPC bit is set in the TIMx_CR2 register then the CC1NP active bit takes the new value from the preloaded bit only when a Commutation event is generated.

Bit 2 **CC1NE**: Capture/Compare 1 complementary output enable

0: Off - OC1N is not active. OC1N level is then function of MOE, OSSI, OSSR, OIS1, OIS1N and CC1E bits.

1: On - OC1N signal is output on the corresponding output pin depending on MOE, OSSI, OSSR, OIS1, OIS1N and CC1E bits.

Bit 1 **CC1P**: Capture/Compare 1 output polarity

0: OC1 active high (output mode) / Edge sensitivity selection (input mode, see below)

1: OC1 active low (output mode) / Edge sensitivity selection (input mode, see below)

When CC1 channel is configured as input, both CC1NP/CC1P bits select the active polarity of TI1FP1 and TI2FP1 for trigger or capture operations.

CC1NP=0, CC1P=0: non-inverted/rising edge. The circuit is sensitive to TIxFP1 rising edge (capture or trigger operations in reset, external clock or trigger mode), TIxFP1 is not inverted (trigger operation in gated mode or encoder mode).

CC1NP=0, CC1P=1: inverted/falling edge. The circuit is sensitive to TIxFP1 falling edge (capture or trigger operations in reset, external clock or trigger mode), TIxFP1 is inverted (trigger operation in gated mode or encoder mode).

CC1NP=1, CC1P=1: non-inverted/both edges/ The circuit is sensitive to both TIxFP1 rising and falling edges (capture or trigger operations in reset, external clock or trigger mode), TIxFP1is not inverted (trigger operation in gated mode). This configuration must not be used in encoder mode.

CC1NP=1, CC1P=0: this configuration is reserved, it must not be used.

Note: This bit is not writable as soon as LOCK level 2 or 3 has been programmed (LOCK bits in TIMx_BDTR register).

On channels that have a complementary output, this bit is preloaded. If the CCPC bit is set in the TIMx_CR2 register then the CC1P active bit takes the new value from the preloaded bit only when a Commutation event is generated.

Bit 0 **CC1E**: Capture/Compare 1 output enable

0: Capture mode disabled / OC1 is not active (see below)

1: Capture mode enabled / OC1 signal is output on the corresponding output pin

When CC1 channel is configured as output, the OC1 level depends on MOE, OSSI, OSSR, OIS1, OIS1N and CC1NE bits, regardless of the CC1E bits state. Refer to *Table 206* for details.

Table 206. Output control bits for complementary OCx and OCxN channels with break feature (TIM15)

<table>
<tr><th colspan="5">Control bits</th><th colspan="2">Output states[1]</th></tr>
<tr><th>MOE bit</th><th>OSSI bit</th><th>OSSR bit</th><th>CCxE bit</th><th>CCxNE bit</th><th>OCx output state</th><th>OCxN output state</th></tr>
<tr><td rowspan="7">1</td><td rowspan="7">X</td><td>X</td><td>0</td><td>0</td><td colspan="2">Output Disabled (not driven by the timer: Hi-Z)
OCx=0
OCxN=0, OCxN_EN=0</td></tr>
<tr><td>0</td><td>0</td><td>1</td><td>Output Disabled (not driven by the timer: Hi-Z)
OCx=0</td><td>OCxREF + Polarity
OCxN=OCxREF XOR CCxNP</td></tr>
<tr><td>0</td><td>1</td><td>0</td><td>OCxREF + Polarity
OCx=OCxREF XOR CCxP</td><td>Output Disabled (not driven by the timer: Hi-Z)
OCxN=0</td></tr>
<tr><td>X</td><td>1</td><td>1</td><td>OCREF + Polarity + dead-time</td><td>Complementary to OCREF (not OCREF) + Polarity + dead-time</td></tr>
<tr><td>1</td><td>0</td><td>1</td><td>Off-State (output enabled with inactive state)
OCx=CCxP</td><td>OCxREF + Polarity
OCxN=OCxREF XOR CCxNP</td></tr>
<tr><td>1</td><td>1</td><td>0</td><td>OCxREF + Polarity
OCx=OCxREF xor CCxP,
OCx_EN=1</td><td>Off-State (output enabled with inactive state)
OCxN=CCxNP, OCxN_EN=1</td></tr>
<tr><td rowspan="6">0</td><td>0</td><td rowspan="6">X</td><td>X</td><td>X</td><td colspan="2" rowspan="2">Output disabled (not driven by the timer anymore). The output state is defined by the GPIO controller and can be High, Low or Hi-Z.</td></tr>
<tr><td rowspan="5">1</td><td>0</td><td>0</td></tr>
<tr><td>0</td><td>1</td><td colspan="2" rowspan="3">Off-State (output enabled with inactive state)
Asynchronously: OCx=CCxP, OCxN=CCxNP
Then if the clock is present: OCx=OISx and OCxN=OISxN after a dead-time, assuming that OISx and OISxN do not correspond to OCX and OCxN both in active state</td></tr>
<tr><td>1</td><td>0</td></tr>
<tr><td>1</td><td>1</td></tr>
</table>

1. When both outputs of a channel are not used (control taken over by GPIO controller), the OISx, OISxN, CCxP and CCxNP bits must be kept cleared.

Note: The state of the external I/O pins connected to the complementary OCx and OCxN channels depends on the OCx and OCxN channel state and AFIO registers.

32.6.10 TIM15 counter (TIM15_CNT)

Address offset: 0x24

Reset value: 0x0000 0000

31	30	29	28	27	26	25	24	23	22	21	20	19	18	17	16
UIF CPY	Res.	Res.	Res.	Res.	Res.	Res.	Res.	Res.	Res.	Res.	Res.	Res.	Res.	Res.	Res.
r															

15	14	13	12	11	10	9	8	7	6	5	4	3	2	1	0
CNT[15:0]															
rw	rw	rw	rw	rw	rw	rw	rw	rw	rw	rw	rw	rw	rw	rw	rw

Bit 31 **UIFCPY**: UIF Copy
This bit is a read-only copy of the UIF bit in the TIMx_ISR register.

Bits 30:16 Reserved, must be kept at reset value.

Bits 15:0 **CNT[15:0]**: Counter value

32.6.11 TIM15 prescaler (TIM15_PSC)

Address offset: 0x28

Reset value: 0x0000

15	14	13	12	11	10	9	8	7	6	5	4	3	2	1	0
PSC[15:0]															
rw	rw	rw	rw	rw	rw	rw	rw	rw	rw	rw	rw	rw	rw	rw	rw

Bits 15:0 **PSC[15:0]**: Prescaler value
The counter clock frequency (CK_CNT) is equal to f_{CK_PSC} / (PSC[15:0] + 1).
PSC contains the value to be loaded in the active prescaler register at each update event (including when the counter is cleared through UG bit of TIMx_EGR register or through trigger controller when configured in “reset mode”).

32.6.12 TIM15 auto-reload register (TIM15_ARR)

Address offset: 0x2C

Reset value: 0xFFFF

15	14	13	12	11	10	9	8	7	6	5	4	3	2	1	0
ARR[15:0]															
rw	rw	rw	rw	rw	rw	rw	rw	rw	rw	rw	rw	rw	rw	rw	rw

Bits 15:0 **ARR[15:0]**: Auto-reload value
ARR is the value to be loaded in the actual auto-reload register.
Refer to the *Section 32.5.1: Time-base unit on page 1090* for more details about ARR update and behavior.
The counter is blocked while the auto-reload value is null.

32.6.13 TIM15 repetition counter register (TIM15_RCR)

Address offset: 0x30

Reset value: 0x0000

15	14	13	12	11	10	9	8	7	6	5	4	3	2	1	0
Res.	Res.	Res.	Res.	Res.	Res.	Res.	Res.	REP[7:0]							
								rw	rw	rw	rw	rw	rw	rw	rw

Bits 15:8 Reserved, must be kept at reset value.

Bits 7:0 **REP[7:0]**: Repetition counter value

These bits allow the user to set-up the update rate of the compare registers (i.e. periodic transfers from preload to active registers) when preload registers are enable, as well as the update interrupt generation rate, if this interrupt is enable.

Each time the REP_CNT related downcounter reaches zero, an update event is generated and it restarts counting from REP value. As REP_CNT is reloaded with REP value only at the repetition update event U_RC, any write to the TIMx_RCR register is not taken in account until the next repetition update event.

It means in PWM mode (REP+1) corresponds to the number of PWM periods in edge-aligned mode.

32.6.14 TIM15 capture/compare register 1 (TIM15_CCR1)

Address offset: 0x34

Reset value: 0x0000

15	14	13	12	11	10	9	8	7	6	5	4	3	2	1	0
CCR1[15:0]															
rw	rw	rw	rw	rw	rw	rw	rw	rw	rw	rw	rw	rw	rw	rw	rw

Bits 15:0 **CCR1[15:0]**: Capture/Compare 1 value

If channel CC1 is configured as output:

CCR1 is the value to be loaded in the actual capture/compare 1 register (preload value).

It is loaded permanently if the preload feature is not selected in the TIMx_CCMR1 register (bit OC1PE). Else the preload value is copied in the active capture/compare 1 register when an update event occurs.

The active capture/compare register contains the value to be compared to the counter TIMx_CNT and signaled on OC1 output.

If channel CC1 is configured as input:

CCR1 is the counter value transferred by the last input capture 1 event (IC1).

32.6.15 TIM15 capture/compare register 2 (TIM15_CCR2)

Address offset: 0x38

Reset value: 0x0000

15	14	13	12	11	10	9	8	7	6	5	4	3	2	1	0
CCR2[15:0]															
rw	rw	rw	rw	rw	rw	rw	rw	rw	rw	rw	rw	rw	rw	rw	rw

Bits 15:0 **CCR2[15:0]**: Capture/Compare 2 value

If channel CC2 is configured as output:
CCR2 is the value to be loaded in the actual capture/compare 2 register (preload value).
It is loaded permanently if the preload feature is not selected in the TIMx_CCMR2 register (bit OC2PE). Else the preload value is copied in the active capture/compare 2 register when an update event occurs.
The active capture/compare register contains the value to be compared to the counter TIMx_CNT and signalled on OC2 output.
If channel CC2 is configured as input:
CCR2 is the counter value transferred by the last input capture 2 event (IC2).

32.6.16 TIM15 break and dead-time register (TIM15_BDTR)

Address offset: 0x44

Reset value: 0x0000 0000

31	30	29	28	27	26	25	24	23	22	21	20	19	18	17	16
Res.	Res.	Res.	Res.	Res.	Res.	Res.	Res.	Res.	Res.	Res.	Res.	Res.	Res.	Res.	Res.

15	14	13	12	11	10	9	8	7	6	5	4	3	2	1	0
MOE	AOE	BKP	BKE	OSSR	OSSI	LOCK[1:0]		DTG[7:0]							
rw	rw	rw	rw	rw	rw	rw	rw	rw	rw	rw	rw	rw	rw	rw	rw

Note: As the AOE, BKP, BKE, OSSI, OSSR and DTG[7:0] bits may be write-locked depending on the LOCK configuration, it may be necessary to configure all of them during the first write access to the TIMx_BDTR register.

Bits 31:20 Reserved, must be kept at reset value.

Bits 19:16 Reserved, must be kept at reset value.

Bit 15 **MOE**: Main output enable

This bit is cleared asynchronously by hardware as soon as the break input is active. It is set by software or automatically depending on the AOE bit. It is acting only on the channels which are configured in output.

0: OC and OCN outputs are disabled or forced to idle state depending on the OSSI bit.

1: OC and OCN outputs are enabled if their respective enable bits are set (CCxE, CCxNE in TIMx_CCER register)

See OC/OCN enable description for more details (*Section 32.6.9: TIM15 capture/compare enable register (TIM15_CCER) on page 1136*).

Bit 14 **AOE**: Automatic output enable

0: MOE can be set only by software

1: MOE can be set by software or automatically at the next update event (if the break input is not be active)

Note: This bit can not be modified as long as LOCK level 1 has been programmed (LOCK bits in TIMx_BDTR register).

Bit 13 **BKP**: Break polarity

0: Break input BRK is active low

1: Break input BRK is active high

Note: This bit can not be modified as long as LOCK level 1 has been programmed (LOCK bits in TIMx_BDTR register).

Any write operation to this bit takes a delay of 1 APB clock cycle to become effective.

Bit 12 **BKE**: Break enable

0: Break inputs (BRK and CCS clock failure event) disabled

1; Break inputs (BRK and CCS clock failure event) enabled

This bit cannot be modified when LOCK level 1 has been programmed (LOCK bits in TIMx_BDTR register).

Note: Any write operation to this bit takes a delay of 1 APB clock cycle to become effective.

Bit 11 **OSSR**: Off-state selection for Run mode

This bit is used when MOE=1 on channels that have a complementary output which are configured as outputs. OSSR is not implemented if no complementary output is implemented in the timer.

See OC/OCN enable description for more details (*Section 32.6.9: TIM15 capture/compare enable register (TIM15_CCER) on page 1136*).

0: When inactive, OC/OCN outputs are disabled (the timer releases the output control which is taken over by the AFIO logic, which forces a Hi-Z state)

1: When inactive, OC/OCN outputs are enabled with their inactive level as soon as CCxE=1 or CCxNE=1 (the output is still controlled by the timer).

Note: This bit can not be modified as soon as the LOCK level 2 has been programmed (LOCK bits in TIMx_BDTR register).

Bit 10 **OSSI**: Off-state selection for Idle mode

This bit is used when MOE=0 on channels configured as outputs.

See OC/OCN enable description for more details (*Section 32.6.9: TIM15 capture/compare enable register (TIM15_CCER) on page 1136*).

0: When inactive, OC/OCN outputs are disabled (OC/OCN enable output signal=0)

1: When inactive, OC/OCN outputs are forced first with their idle level as soon as CCxE=1 or CCxNE=1. OC/OCN enable output signal=1)

Note: This bit can not be modified as soon as the LOCK level 2 has been programmed (LOCK bits in TIMx_BDTR register).

Bits 9:8 **LOCK[1:0]**: Lock configuration

These bits offer a write protection against software errors.

00: LOCK OFF - No bit is write protected

01: LOCK Level 1 = DTG bits in TIMx_BDTR register, OISx and OISxN bits in TIMx_CR2 register and BKE/BKP/AOE bits in TIMx_BDTR register can no longer be written

10: LOCK Level 2 = LOCK Level 1 + CC Polarity bits (CCxP/CCxNP bits in TIMx_CCER register, as long as the related channel is configured in output through the CCxS bits) as well as OSSR and OSSI bits can no longer be written.

11: LOCK Level 3 = LOCK Level 2 + CC Control bits (OCxM and OCxPE bits in TIMx_CCMRx registers, as long as the related channel is configured in output through the CCxS bits) can no longer be written.

Note: The LOCK bits can be written only once after the reset. Once the TIMx_BDTR register has been written, their content is frozen until the next reset.

Bits 7:0 **DTG[7:0]**: Dead-time generator setup

This bit-field defines the duration of the dead-time inserted between the complementary outputs. DT correspond to this duration.

DTG[7:5]=0xx => DT=DTG[7:0]x t_{dtg} with $t_{dtg}=t_{DTS}$

DTG[7:5]=10x => DT=(64+DTG[5:0])xt_{dtg} with $T_{dtg}=2xt_{DTS}$

DTG[7:5]=110 => DT=(32+DTG[4:0])xt_{dtg} with $T_{dtg}=8xt_{DTS}$

DTG[7:5]=111 => DT=(32+DTG[4:0])xt_{dtg} with $T_{dtg}=16xt_{DTS}$

Example if T_{DTS}=125ns (8MHz), dead-time possible values are:

0 to 15875 ns by 125 ns steps,

16 µs to 31750 ns by 250 ns steps,

32 µs to 63 µs by 1 µs steps,

64 µs to 126 µs by 2 µs steps

Note: This bit-field can not be modified as long as LOCK level 1, 2 or 3 has been programmed (LOCK bits in TIMx_BDTR register).

32.6.17 TIM15 DMA control register (TIM15_DCR)

Address offset: 0x48

Reset value: 0x0000

15	14	13	12	11	10	9	8	7	6	5	4	3	2	1	0
Res.	Res.	Res.	DBL[4:0]					Res.	Res.	Res.	DBA[4:0]				
			rw	rw	rw	rw	rw				rw	rw	rw	rw	rw

Bits 15:13 Reserved, must be kept at reset value.

Bits 12:8 **DBL[4:0]**: DMA burst length

This 5-bit field defines the length of DMA transfers (the timer recognizes a burst transfer when a read or a write access is done to the TIMx_DMAR address).
00000: 1 transfer,
00001: 2 transfers,
00010: 3 transfers,
...
10001: 18 transfers.

Bits 7:5 Reserved, must be kept at reset value.

Bits 4:0 **DBA[4:0]**: DMA base address

This 5-bit field defines the base-address for DMA transfers (when read/write access are done through the TIMx_DMAR address). DBA is defined as an offset starting from the address of the TIMx_CR1 register.
Example:
00000: TIMx_CR1,
00001: TIMx_CR2,
00010: TIMx_SMCR,
...

32.6.18 TIM15 DMA address for full transfer (TIM15_DMAR)

Address offset: 0x4C

Reset value: 0x0000

15	14	13	12	11	10	9	8	7	6	5	4	3	2	1	0
DMAB[15:0]															
rw	rw	rw	rw	rw	rw	rw	rw	rw	rw	rw	rw	rw	rw	rw	rw

Bits 15:0 **DMAB[15:0]**: DMA register for burst accesses

A read or write operation to the DMAR register accesses the register located at the address

(TIMx_CR1 address) + (DBA + DMA index) x 4

where TIMx_CR1 address is the address of the control register 1, DBA is the DMA base address configured in TIMx_DCR register, DMA index is automatically controlled by the DMA transfer, and ranges from 0 to DBL (DBL configured in TIMx_DCR).

32.6.19 TIM15 option register 1 (TIM15_OR1)

Address offset: 0x50

Reset value: 0x0000

31	30	29	28	27	26	25	24	23	22	21	20	19	18	17	16
Res.	Res.	Res.	Res.	Res.	Res.	Res.	Res.	Res.	Res.	Res.	Res.	Res.	Res.	Res.	Res.

15	14	13	12	11	10	9	8	7	6	5	4	3	2	1	0
Res.	Res.	Res.	Res.	Res.	Res.	Res.	Res.	Res.	Res.	Res.	Res.	Res.	ENCODER_ MODE[1:0]		TI1_ RMP
													rw	rw	rw

Bits 31:3 Reserved, must be kept at reset value.

Bits 2:1 **ENCODER_MODE[1:0]**: Encoder mode
00: No redirection
01:TIM2 IC1 and TIM2 IC2 are connected to TIM15 IC1 and TIM15 IC2 respectively
10:TIM3 IC1 and TIM3 IC2 are connected to TIM15 IC1 and TIM15 IC2 respectively
11:TIM4 IC1 and TIM4 IC2 are connected to TIM15 IC1 and TIM15 IC2 respectively

Bit 0 **TI1_RMP**: Input capture 1 remap
0: TIM15 input capture 1 is connected to I/O
1: TIM15 input capture 1 is connected to LSE

32.6.20 TIM15 option register 2 (TIM15_OR2)

Address offset: 0x60

Reset value: 0x0000 0001

31	30	29	28	27	26	25	24	23	22	21	20	19	18	17	16
Res.	Res.	Res.	Res.	Res.	Res.	Res.	Res.	Res.	Res.	Res.	Res.	Res.	Res.	Res.	Res.

15	14	13	12	11	10	9	8	7	6	5	4	3	2	1	0
Res.	Res.	Res.	Res.	BKCMP2P	BKCMP1P	BKINP	BKDF1BK0E	Res.	Res.	Res.	Res.	Res.	BKCMP2E	BKCMP1E	BKINE
				rw	rw	rw	rw						rw	rw	rw

Bits 31:12 Reserved, must be kept at reset value.

Bit 11 **BKCMP2P**: BRK COMP2 input polarity
This bit selects the COMP2 input sensitivity. It must be programmed together with the BKP polarity bit.
0: COMP2 input is active low
1: COMP2 input is active high

Note: This bit can not be modified as long as LOCK level 1 has been programmed (LOCK bits in TIMx_BDTR register).

Bit 10 **BKCMP1P**: BRK COMP1 input polarity
This bit selects the COMP1 input sensitivity. It must be programmed together with the BKP polarity bit.
0: COMP1 input is active low
1: COMP1 input is active high

Note: This bit can not be modified as long as LOCK level 1 has been programmed (LOCK bits in TIMx_BDTR register).

Bit 9 **BKINP**: BRK BKIN input polarity
This bit selects the BKIN alternate function input sensitivity. It must be programmed together with the BKP polarity bit.
0: BKIN input is active low
1: BKIN input is active high

Note: This bit can not be modified as long as LOCK level 1 has been programmed (LOCK bits in TIMx_BDTR register).

Bit 8 **BKDF1BK0E**: BRK dfsdm1_break[0] enable

This bit enables the dfsdm1_break[0] for the timer's BRK input. dfsdm1_break[0] output is 'ORed' with the other BRK sources.

0: dfsdm1_break[0]input disabled

1: dfsdm1_break[0]input enabled

Note: This bit can not be modified as long as LOCK level 1 has been programmed (LOCK bits in TIMx_BDTR register).

Bits 7:3 Reserved, must be kept at reset value.

Bit 2 **BKCMP2E**: BRK COMP2 enable

This bit enables the COMP2 for the timer's BRK input. COMP2 output is 'ORed' with the other BRK sources.

0: COMP2 input disabled

1: COMP2 input enabled

Note: This bit can not be modified as long as LOCK level 1 has been programmed (LOCK bits in TIMx_BDTR register).

Bit 1 **BKCMP1E**: BRK COMP1 enable

This bit enables the COMP1 for the timer's BRK input. COMP1 output is 'ORed' with the other BRK sources.

0: COMP1 input disabled

1: COMP1 input enabled

Note: This bit can not be modified as long as LOCK level 1 has been programmed (LOCK bits in TIMx_BDTR register).

Bit 0 **BKINE**: BRK BKIN input enable

This bit enables the BKIN alternate function input for the timer's BRK input. BKIN input is 'ORed' with the other BRK sources.

0: BKIN input disabled

1: BKIN input enabled

Note: This bit can not be modified as long as LOCK level 1 has been programmed (LOCK bits in TIMx_BDTR register).

32.6.21 TIM15 register map

TIM15 registers are mapped as 16-bit addressable registers as described in the table below:

Table 207. TIM15 register map and reset values

Offset	Register name	31	30	29	28	27	26	25	24	23	22	21	20	19	18	17	16	15	14	13	12	11	10	9	8	7	6	5	4	3	2	1	0
0x00	TIM15_CR1	Res.	Res.	Res.	Res.	Res.	Res.	Res.	Res.	Res.	Res.	Res.	Res.	Res.	Res.	Res.	Res.	Res.	Res.	Res.	Res.	UIFREMA	Res.	CKD [1:0]		ARPE	Res.	Res.	Res.	OPM	URS	UDIS	CEN
	Reset value																					0		0	0	0				0	0	0	0
0x04	TIM15_CR2	Res.	Res.	Res.	Res.	Res.	Res.	Res.	Res.	Res.	Res.	Res.	Res.	Res.	Res.	Res.	Res.	Res.	Res.	Res.	Res.	Res.	OIS2	OIS1N	OIS1	TI1S	MMS[2:0]			CCDS	CCUS	Res.	CCPC
	Reset value																						0	0	0	0	0	0	0	0	0		0

Table 207. TIM15 register map and reset values (continued)

Offset	Register name	31	30	29	28	27	26	25	24	23	22	21	20	19	18	17	16	15	14	13	12	11	10	9	8	7	6	5	4	3	2	1	0
0x08	TIM15_SMCR	Res.	Res.	Res.	Res.	Res.	Res.	Res.	Res.	Res.	Res.	Res.	Res.	Res.	Res.	Res.	SMS[3]	Res.	Res.	Res.	Res.	Res.	Res.	Res.	Res.	MSM	TS[2:0]			Res.	SMS[2:0]		
	Reset value																0									0	0	0	0		0	0	0
0x0C	TIM15_DIER	Res.	Res.	Res.	Res.	Res.	Res.	Res.	Res.	Res.	Res.	Res.	Res.	Res.	Res.	Res.	Res.	Res.	TDE	COMDE	Res.	Res.	CC2DE	CC1DE	UDE	BIE	TIE	COMIE	Res.	Res.	CC2IE	CC1IE	UIE
	Reset value																		0	0			0	0	0	0	0	0			0	0	0
0x10	TIM15_SR	Res.	Res.	Res.	Res.	Res.	Res.	Res.	Res.	Res.	Res.	Res.	Res.	Res.	Res.	Res.	Res.	Res.	Res.	Res.	Res.	Res.	CC2OF	CC1OF	Res.	BIF	TIF	COMIF	Res.	Res.	CC2IF	CC1IF	UIF
	Reset value																						0	0		0	0	0			0	0	0
0x14	TIM15_EGR	Res.	Res.	Res.	Res.	Res.	Res.	Res.	Res.	Res.	Res.	Res.	Res.	Res.	Res.	Res.	Res.	Res.	Res.	Res.	Res.	Res.	Res.	Res.	Res.	BG	TG	COMG	Res.	Res.	CC2G	CC1G	UG
	Reset value																									0	0	0			0	0	0
0x18	TIM15_CCMR1 Output Compare mode	Res.	Res.	Res.	Res.	Res.	Res.	Res.	OC2M[3]	Res.	Res.	Res.	Res.	Res.	Res.	Res.	OC1M[3]	Res.	OC2M [2:0]			OC2PE	OC2FE	CC2S [1:0]		Res.	OC1M [2:0]			OC1PE	OC1FE	CC1S [1:0]	
	Reset value								0								0		0	0	0	0	0	0	0		0	0	0	0	0	0	0
	TIM15_CCMR1 Input Capture mode	Res.	Res.	Res.	Res.	Res.	Res.	Res.	Res.	Res.	Res.	Res.	Res.	Res.	Res.	Res.	Res.	IC2F[3:0]				IC2 PSC [1:0]		CC2S [1:0]		IC1F[3:0]				IC1 PSC [1:0]	CC1S [1:0]		
	Reset value																	0	0	0	0	0	0	0	0	0	0	0	0	0	0	0	0
0x20	TIM15_CCER	Res.	Res.	Res.	Res.	Res.	Res.	Res.	Res.	Res.	Res.	Res.	Res.	Res.	Res.	Res.	Res.	Res.	Res.	Res.	Res.	Res.	Res.	Res.	Res.	CC2NP	Res.	CC2P	CC2E	CC1NP	CC1NE	CC1P	CC1E
	Reset value																									0		0	0	0	0	0	0
0x24	TIM15_CNT	UIFCPY or Res.	Res.	Res.	Res.	Res.	Res.	Res.	Res.	Res.	Res.	Res.	Res.	Res.	Res.	Res.	Res.	CNT[15:0]															
	Reset value	0																0	0	0	0	0	0	0	0	0	0	0	0	0	0	0	0
0x28	TIM15_PSC	Res.	Res.	Res.	Res.	Res.	Res.	Res.	Res.	Res.	Res.	Res.	Res.	Res.	Res.	Res.	Res.	PSC[15:0]															
	Reset value																	0	0	0	0	0	0	0	0	0	0	0	0	0	0	0	0
0x2C	TIM15_ARR	Res.	Res.	Res.	Res.	Res.	Res.	Res.	Res.	Res.	Res.	Res.	Res.	Res.	Res.	Res.	Res.	ARR[15:0]															
	Reset value																	1	1	1	1	1	1	1	1	1	1	1	1	1	1	1	1
0x30	TIM15_RCR	Res.	Res.	Res.	Res.	Res.	Res.	Res.	Res.	Res.	Res.	Res.	Res.	Res.	Res.	Res.	Res.	Res.	Res.	Res.	Res.	Res.	Res.	Res.	Res.	REP[7:0]							
	Reset value																									0	0	0	0	0	0	0	0

Table 207. TIM15 register map and reset values (continued)

Offset	Register name	31	30	29	28	27	26	25	24	23	22	21	20	19	18	17	16	15	14	13	12	11	10	9	8	7	6	5	4	3	2	1	0
0x34	TIM15_CCR1	Res.	Res.	Res.	Res.	Res.	Res.	Res.	Res.	Res.	Res.	Res.	Res.	Res.	Res.	Res.	Res.	CCR1[15:0]															
	Reset value																	0	0	0	0	0	0	0	0	0	0	0	0	0	0	0	0
0x38	TIM15_CCR2	Res.	Res.	Res.	Res.	Res.	Res.	Res.	Res.	Res.	Res.	Res.	Res.	Res.	Res.	Res.	Res.	CCR2[15:0]															
	Reset value																	0	0	0	0	0	0	0	0	0	0	0	0	0	0	0	0
0x44	TIM15_BDTR	Res.	Res.	Res.	Res.	Res.	Res.	Res.	Res.	Res.	Res.	Res.	Res.	Res.	Res.	Res.	Res.	MOE	AOE	BKP	BKE	OSSR	OSSI	LOCK [1:0]		DTG[7:0]							
	Reset value																	0	0	0	0	0	0	0	0	0	0	0	0	0	0	0	0
0x48	TIM15_DCR	Res.	Res.	Res.	Res.	Res.	Res.	Res.	Res.	Res.	Res.	Res.	Res.	Res.	Res.	Res.	Res.	Res.	Res.	Res.	DBL[4:0]					Res.	Res.	Res.	DBA[4:0]				
	Reset value																				0	0	0	0	0				0	0	0	0	0
0x4C	TIM15_DMAR	Res.	Res.	Res.	Res.	Res.	Res.	Res.	Res.	Res.	Res.	Res.	Res.	Res.	Res.	Res.	Res.	DMAB[15:0]															
	Reset value																	0	0	0	0	0	0	0	0	0	0	0	0	0	0	0	0
0x50	TIM15_OR1	Res.	Res.	Res.	Res.	Res.	Res.	Res.	Res.	Res.	Res.	Res.	Res.	Res.	Res.	Res.	Res.	Res.	Res.	Res.	Res.	Res.	Res.	Res.	Res.	Res.	Res.	Res.	Res.	Res.	ENCODER_MODE[1:0]		TI1_RMP
	Reset value																														0	0	0
0x60	TIM15_OR2	Res.	Res.	Res.	Res.	Res.	Res.	Res.	Res.	Res.	Res.	Res.	Res.	Res.	Res.	Res.	Res.	Res.	Res.	Res.	Res.	BKCMP2P	BKCMP1P	BKINP	BKDF1BK0E	Res.	Res.	Res.	Res.	Res.	BKCMP2E	BKCMP1E	BKINE
	Reset value																					0	0	0	0						0	0	1

Refer to *Section 2.2 on page 75* for the register boundary addresses.

32.7 TIM16/TIM17 registers

Refer to *Section 1.2* for a list of abbreviations used in register descriptions.

The peripheral registers can be accessed by half-words (16-bit) or words (32-bit).

32.7.1 TIMx control register 1 (TIMx_CR1)(x = 16 to 17)

Address offset: 0x00

Reset value: 0x0000

15	14	13	12	11	10	9	8	7	6	5	4	3	2	1	0
Res.	Res.	Res.	Res.	UIFREMAP	Res.	CKD[1:0]		ARPE	Res.	Res.	Res.	OPM	URS	UDIS	CEN
				rw		rw	rw	rw				rw	rw	rw	rw

Bits 15:12 Reserved, must be kept at reset value.

Bit 11 **UIFREMAP**: UIF status bit remapping

0: No remapping. UIF status bit is not copied to TIMx_CNT register bit 31.
1: Remapping enabled. UIF status bit is copied to TIMx_CNT register bit 31.

Bit 10 Reserved, must be kept at reset value.

Bits 9:8 **CKD[1:0]**: Clock division

This bit-field indicates the division ratio between the timer clock (CK_INT) frequency and the dead-time and sampling clock (t_{DTS})used by the dead-time generators and the digital filters (TIx),

00: $t_{DTS}=t_{CK_INT}$
01: $t_{DTS}=2*t_{CK_INT}$
10: $t_{DTS}=4*t_{CK_INT}$
11: Reserved, do not program this value

Bit 7 **ARPE**: Auto-reload preload enable

0: TIMx_ARR register is not buffered
1: TIMx_ARR register is buffered

Bits 6:4 Reserved, must be kept at reset value.

Bit 3 **OPM**: One pulse mode

0: Counter is not stopped at update event
1: Counter stops counting at the next update event (clearing the bit CEN)

Bit 2 **URS**: Update request source

This bit is set and cleared by software to select the UEV event sources.

0: Any of the following events generate an update interrupt or DMA request if enabled. These events can be:
- Counter overflow/underflow
- Setting the UG bit
- Update generation through the slave mode controller

1: Only counter overflow/underflow generates an update interrupt or DMA request if enabled.

Bit 1 **UDIS**: Update disable

This bit is set and cleared by software to enable/disable UEV event generation.

0: UEV enabled. The Update (UEV) event is generated by one of the following events:

– Counter overflow/underflow

– Setting the UG bit

– Update generation through the slave mode controller

Buffered registers are then loaded with their preload values.

1: UEV disabled. The Update event is not generated, shadow registers keep their value (ARR, PSC, CCRx). However the counter and the prescaler are reinitialized if the UG bit is set or if a hardware reset is received from the slave mode controller.

Bit 0 **CEN**: Counter enable

0: Counter disabled

1: Counter enabled

Note: External clock and gated mode can work only if the CEN bit has been previously set by software. However trigger mode can set the CEN bit automatically by hardware.

32.7.2 TIMx control register 2 (TIMx_CR2)(x = 16 to 17)

Address offset: 0x04

Reset value: 0x0000

15	14	13	12	11	10	9	8	7	6	5	4	3	2	1	0
Res.	Res.	Res.	Res.	Res.	Res.	OIS1N	OIS1	Res.	Res.	Res.	Res.	CCDS	CCUS	Res.	CCPC
						rw	rw					rw	rw		rw

Bits 15:10 Reserved, must be kept at reset value.

Bit 9 **OIS1N**: Output Idle state 1 (OC1N output)

0: OC1N=0 after a dead-time when MOE=0

1: OC1N=1 after a dead-time when MOE=0

Note: This bit can not be modified as long as LOCK level 1, 2 or 3 has been programmed (LOCK bits in TIMx_BDTR register).

Bit 8 **OIS1**: Output Idle state 1 (OC1 output)

0: OC1=0 (after a dead-time if OC1N is implemented) when MOE=0

1: OC1=1 (after a dead-time if OC1N is implemented) when MOE=0

Note: This bit can not be modified as long as LOCK level 1, 2 or 3 has been programmed (LOCK bits in TIMx_BDTR register).

Bits 7:4 Reserved, must be kept at reset value.

Bit 3 **CCDS**: Capture/compare DMA selection

0: CCx DMA request sent when CCx event occurs

1: CCx DMA requests sent when update event occurs

Bit 2 **CCUS**: Capture/compare control update selection

0: When capture/compare control bits are preloaded (CCPC=1), they are updated by setting the COMG bit only.

1: When capture/compare control bits are preloaded (CCPC=1), they are updated by setting the COMG bit or when an rising edge occurs on TRGI.

Note: This bit acts only on channels that have a complementary output.

Bit 1 Reserved, must be kept at reset value.

Bit 0 **CCPC**: Capture/compare preloaded control

0: CCxE, CCxNE and OCxM bits are not preloaded

1: CCxE, CCxNE and OCxM bits are preloaded, after having been written, they are updated only when COM bit is set.

Note: This bit acts only on channels that have a complementary output.

32.7.3 TIMx DMA/interrupt enable register (TIMx_DIER)(x = 16 to 17)

Address offset: 0x0C

Reset value: 0x0000

15	14	13	12	11	10	9	8	7	6	5	4	3	2	1	0
Res.	Res.	Res.	Res.	Res.	Res.	CC1DE	UDE	BIE	Res.	COMIE	Res.	Res.	Res.	CC1IE	UIE
						rw	rw	rw		rw				rw	rw

Bits 15:10 Reserved, must be kept at reset value.

Bit 9 **CC1DE**: Capture/Compare 1 DMA request enable

0: CC1 DMA request disabled

1: CC1 DMA request enabled

Bit 8 **UDE**: Update DMA request enable

0: Update DMA request disabled

1: Update DMA request enabled

Bit 7 **BIE**: Break interrupt enable

0: Break interrupt disabled

1: Break interrupt enabled

Bit 6 Reserved, must be kept at reset value.

Bit 5 **COMIE:** COM interrupt enable

0: COM interrupt disabled

1: COM interrupt enabled

Bits 4:2 Reserved, must be kept at reset value.

Bit 1 **CC1IE**: Capture/Compare 1 interrupt enable

0: CC1 interrupt disabled

1: CC1 interrupt enabled

Bit 0 **UIE**: Update interrupt enable

0: Update interrupt disabled

1: Update interrupt enabled

32.7.4 TIMx status register (TIMx_SR)(x = 16 to 17)

Address offset: 0x10

Reset value: 0x0000

15	14	13	12	11	10	9	8	7	6	5	4	3	2	1	0
Res.	Res.	Res.	Res.	Res.	Res.	CC1OF	Res.	BIF	Res.	COMIF	Res.	Res.	Res.	CC1IF	UIF
						rc_w0		rc_w0		rc_w0				rc_w0	rc_w0

Bits 15:10 Reserved, must be kept at reset value.

Bit 9 **CC1OF**: Capture/Compare 1 overcapture flag

This flag is set by hardware only when the corresponding channel is configured in input capture mode. It is cleared by software by writing it to ‘0’.
0: No overcapture has been detected
1: The counter value has been captured in TIMx_CCR1 register while CC1IF flag was already set

Bit 8 Reserved, must be kept at reset value.

Bit 7 **BIF**: Break interrupt flag

This flag is set by hardware as soon as the break input goes active. It can be cleared by software if the break input is not active.
0: No break event occurred
1: An active level has been detected on the break input

Bit 6 Reserved, must be kept at reset value.

Bit 5 **COMIF:** COM interrupt flag

This flag is set by hardware on a COM event (once the capture/compare control bits –CCxE, CCxNE, OCxM– have been updated). It is cleared by software.
0: No COM event occurred
1: COM interrupt pending

Bits 4:2 Reserved, must be kept at reset value.

Bit 1 **CC1IF**: Capture/Compare 1 interrupt flag

This flag is set by hardware. It is cleared by software (input capture or output compare mode) or by reading the TIMx_CCR1 register (input capture mode only).
0: No compare match / No input capture occurred
1: A compare match or an input capture occurred
If channel CC1 is configured as output: this flag is set when the content of the counter TIMx_CNT matches the content of the TIMx_CCR1 register. When the content of TIMx_CCR1 is greater than the content of TIMx_ARR, the CC1IF bit goes high on the counter overflow (in up-counting and up/down-counting modes) or underflow (in down-counting mode). There are 3 possible options for flag setting in center-aligned mode, refer to the CMS bits in the TIMx_CR1 register for the full description.
If channel CC1 is configured as input: this bit is set when counter value has been captured in TIMx_CCR1 register (an edge has been detected on IC1, as per the edge sensitivity defined with the CC1P and CC1NP bits setting, in TIMx_CCER).

Bit 0 **UIF**: Update interrupt flag

This bit is set by hardware on an update event. It is cleared by software.
0: No update occurred.
1: Update interrupt pending. This bit is set by hardware when the registers are updated:

- At overflow regarding the repetition counter value (update if repetition counter = 0) and if the UDIS=0 in the TIMx_CR1 register.
- When CNT is reinitialized by software using the UG bit in TIMx_EGR register, if URS=0 and UDIS=0 in the TIMx_CR1 register.

32.7.5 TIMx event generation register (TIMx_EGR)(x = 16 to 17)

Address offset: 0x14

Reset value: 0x0000

15	14	13	12	11	10	9	8	7	6	5	4	3	2	1	0
Res.	Res.	Res.	Res.	Res.	Res.	Res.	Res.	BG	Res.	COMG	Res.	Res.	Res.	CC1G	UG
								w		w				w	w

Bits 15:8 Reserved, must be kept at reset value.

Bit 7 **BG**: Break generation

This bit is set by software in order to generate an event, it is automatically cleared by hardware.
0: No action.
1: A break event is generated. MOE bit is cleared and BIF flag is set. Related interrupt or DMA transfer can occur if enabled.

Bit 6 Reserved, must be kept at reset value.

Bit 5 **COMG:** Capture/Compare control update generation

This bit can be set by software, it is automatically cleared by hardware.
0: No action
1: When the CCPC bit is set, it is possible to update the CCxE, CCxNE and OCxM bits

Note: This bit acts only on channels that have a complementary output.

Bits 4:2 Reserved, must be kept at reset value.

Bit 1 **CC1G**: Capture/Compare 1 generation

This bit is set by software in order to generate an event, it is automatically cleared by hardware.
0: No action.
1: A capture/compare event is generated on channel 1:
If channel CC1 is configured as output:
CC1IF flag is set, Corresponding interrupt or DMA request is sent if enabled.
If channel CC1 is configured as input:
The current value of the counter is captured in TIMx_CCR1 register. The CC1IF flag is set, the corresponding interrupt or DMA request is sent if enabled. The CC1OF flag is set if the CC1IF flag was already high.

Bit 0 **UG**: Update generation

This bit can be set by software, it is automatically cleared by hardware.
0: No action.
1: Reinitialize the counter and generates an update of the registers. Note that the prescaler counter is cleared too (anyway the prescaler ratio is not affected).

32.7.6 TIMx capture/compare mode register 1 [alternate] (TIMx_CCMR1) (x = 16 to 17)

Address offset: 0x18

Reset value: 0x0000 0000

The same register can be used for input capture mode (this section) or for output compare mode (next section). The direction of a channel is defined by configuring the corresponding CCxS bits. All the other bits of this register have a different function in input and in output mode.

Input capture mode:

31	30	29	28	27	26	25	24	23	22	21	20	19	18	17	16
Res.	Res.	Res.	Res.	Res.	Res.	Res.	Res.	Res.	Res.	Res.	Res.	Res.	Res.	Res.	Res.

15	14	13	12	11	10	9	8	7	6	5	4	3	2	1	0
Res.	Res.	Res.	Res.	Res.	Res.	Res.	Res.	IC1F[3:0]				IC1PSC[1:0]		CC1S[1:0]	
								rw	rw	rw	rw	rw	rw	rw	rw

Bits 31:8 Reserved, must be kept at reset value.

Bits 7:4 **IC1F[3:0]**: Input capture 1 filter

This bit-field defines the frequency used to sample TI1 input and the length of the digital filter applied to TI1. The digital filter is made of an event counter in which N consecutive events are needed to validate a transition on the output:

0000: No filter, sampling is done at f_{DTS}
0001: $f_{SAMPLING}=f_{CK_INT}$, N=2
0010: $f_{SAMPLING}=f_{CK_INT}$, N=4
0011: $f_{SAMPLING}=f_{CK_INT}$, N=8
0100: $f_{SAMPLING}=f_{DTS}/2$, N=
0101: $f_{SAMPLING}=f_{DTS}/2$, N=8
0110: $f_{SAMPLING}=f_{DTS}/4$, N=6
0111: $f_{SAMPLING}=f_{DTS}/4$, N=8
1000: $f_{SAMPLING}=f_{DTS}/8$, N=6
1001: $f_{SAMPLING}=f_{DTS}/8$, N=8
1010: $f_{SAMPLING}=f_{DTS}/16$, N=5
1011: $f_{SAMPLING}=f_{DTS}/16$, N=6
1100: $f_{SAMPLING}=f_{DTS}/16$, N=8
1101: $f_{SAMPLING}=f_{DTS}/32$, N=5
1110: $f_{SAMPLING}=f_{DTS}/32$, N=6
1111: $f_{SAMPLING}=f_{DTS}/32$, N=8

Bits 3:2 **IC1PSC[1:0]**: Input capture 1 prescaler

This bit-field defines the ratio of the prescaler acting on CC1 input (IC1).
The prescaler is reset as soon as CC1E='0' (TIMx_CCER register).
00: no prescaler, capture is done each time an edge is detected on the capture input.
01: capture is done once every 2 events
10: capture is done once every 4 events
11: capture is done once every 8 events

Bits 1:0 **CC1S[1:0]**: Capture/Compare 1 Selection

This bit-field defines the direction of the channel (input/output) as well as the used input.
00: CC1 channel is configured as output
01: CC1 channel is configured as input, IC1 is mapped on TI1
Others: Reserved

Note: CC1S bits are writable only when the channel is OFF (CC1E = '0' in TIMx_CCER).

32.7.7 TIMx capture/compare mode register 1 [alternate] (TIMx_CCMR1) (x = 16 to 17)

Address offset: 0x18

Reset value: 0x0000 0000

The same register can be used for output compare mode (this section) or for input capture mode (previous section). The direction of a channel is defined by configuring the corresponding CCxS bits. All the other bits of this register have a different function in input and in output mode.

Output compare mode:

31	30	29	28	27	26	25	24	23	22	21	20	19	18	17	16
Res.	Res.	Res.	Res.	Res.	Res.	Res.	Res.	Res.	Res.	Res.	Res.	Res.	Res.	Res.	OC1M [3]
															rw
15	14	13	12	11	10	9	8	7	6	5	4	3	2	1	0
Res.	Res.	Res.	Res.	Res.	Res.	Res.	Res.	Res.	OC1M[2:0]			OC1PE	OC1FE	CC1S[1:0]	
									rw	rw	rw	rw	rw	rw	rw

Bits 31:17 Reserved, must be kept at reset value.

Bits 15:7 Reserved, must be kept at reset value.

Bits 16, 6:4 **OC1M[3:0]**: Output Compare 1 mode

These bits define the behavior of the output reference signal OC1REF from which OC1 and OC1N are derived. OC1REF is active high whereas OC1 and OC1N active level depends on CC1P and CC1NP bits.

0000: Frozen - The comparison between the output compare register TIMx_CCR1 and the counter TIMx_CNT has no effect on the outputs.

0001: Set channel 1 to active level on match. OC1REF signal is forced high when the counter TIMx_CNT matches the capture/compare register 1 (TIMx_CCR1).

0010: Set channel 1 to inactive level on match. OC1REF signal is forced low when the counter TIMx_CNT matches the capture/compare register 1 (TIMx_CCR1).

0011: Toggle - OC1REF toggles when TIMx_CNT=TIMx_CCR1.

0100: Force inactive level - OC1REF is forced low.

0101: Force active level - OC1REF is forced high.

0110: PWM mode 1 - Channel 1 is active as long as TIMx_CNT<TIMx_CCR1 else inactive.

0111: PWM mode 2 - Channel 1 is inactive as long as TIMx_CNT<TIMx_CCR1 else active.

All other values: Reserved

Note: These bits can not be modified as long as LOCK level 3 has been programmed (LOCK bits in TIMx_BDTR register) and CC1S='00' (the channel is configured in output).

In PWM mode 1 or 2, the OCREF level changes only when the result of the comparison changes or when the output compare mode switches from "frozen" mode to "PWM" mode.

Bit 3 **OC1PE**: Output Compare 1 preload enable

0: Preload register on TIMx_CCR1 disabled. TIMx_CCR1 can be written at anytime, the new value is taken in account immediately.

1: Preload register on TIMx_CCR1 enabled. Read/Write operations access the preload register. TIMx_CCR1 preload value is loaded in the active register at each update event.

Note: These bits can not be modified as long as LOCK level 3 has been programmed (LOCK bits in TIMx_BDTR register) and CC1S='00' (the channel is configured in output).

The PWM mode can be used without validating the preload register only in one pulse mode (OPM bit set in TIMx_CR1 register). Else the behavior is not guaranteed.

Bit 2 **OC1FE**: Output Compare 1 fast enable

This bit decreases the latency between a trigger event and a transition on the timer output. It must be used in one-pulse mode (OPM bit set in TIMx_CR1 register), to have the output pulse starting as soon as possible after the starting trigger.

0: CC1 behaves normally depending on counter and CCR1 values even when the trigger is ON. The minimum delay to activate CC1 output when an edge occurs on the trigger input is 5 clock cycles.

1: An active edge on the trigger input acts like a compare match on CC1 output. Then, OC is set to the compare level independently of the result of the comparison. Delay to sample the trigger input and to activate CC1 output is reduced to 3 clock cycles. OC1FE acts only if the channel is configured in PWM1 or PWM2 mode.

Bits 1:0 **CC1S[1:0]**: Capture/Compare 1 selection

This bit-field defines the direction of the channel (input/output) as well as the used input.
00: CC1 channel is configured as output
01: CC1 channel is configured as input, IC1 is mapped on TI1
Others: Reserved

Note: CC1S bits are writable only when the channel is OFF (CC1E = '0' in TIMx_CCER).

32.7.8 TIMx capture/compare enable register (TIMx_CCER)(x = 16 to 17)

Address offset: 0x20

Reset value: 0x0000

15	14	13	12	11	10	9	8	7	6	5	4	3	2	1	0
Res.	Res.	Res.	Res.	Res.	Res.	Res.	Res.	Res.	Res.	Res.	Res.	CC1NP	CC1NE	CC1P	CC1E
												rw	rw	rw	rw

Bits 15:4 Reserved, must be kept at reset value.

Bit 3 **CC1NP**: Capture/Compare 1 complementary output polarity

CC1 channel configured as output:

0: OC1N active high
1: OC1N active low

CC1 channel configured as input:

This bit is used in conjunction with CC1P to define the polarity of TI1FP1 and TI2FP1. Refer to the description of CC1P.

Note: This bit is not writable as soon as LOCK level 2 or 3 has been programmed (LOCK bits in TIMx_BDTR register) and CC1S="00" (the channel is configured in output).

On channels that have a complementary output, this bit is preloaded. If the CCPC bit is set in the TIMx_CR2 register then the CC1NP active bit takes the new value from the preloaded bit only when a commutation event is generated.

Bit 2 **CC1NE**: Capture/Compare 1 complementary output enable

0: Off - OC1N is not active. OC1N level is then function of MOE, OSSI, OSSR, OIS1, OIS1N and CC1E bits.

1: On - OC1N signal is output on the corresponding output pin depending on MOE, OSSI, OSSR, OIS1, OIS1N and CC1E bits.

Bit 1 **CC1P**: Capture/Compare 1 output polarity

0: OC1 active high (output mode) / Edge sensitivity selection (input mode, see below)

1: OC1 active low (output mode) / Edge sensitivity selection (input mode, see below)

When CC1 channel is configured as input, both CC1NP/CC1P bits select the active polarity of TI1FP1 and TI2FP1 for trigger or capture operations.

CC1NP=0, CC1P=0: non-inverted/rising edge. The circuit is sensitive to TIxFP1 rising edge (capture or trigger operations in reset, external clock or trigger mode), TIxFP1 is not inverted (trigger operation in gated mode or encoder mode).

CC1NP=0, CC1P=1: inverted/falling edge. The circuit is sensitive to TIxFP1 falling edge (capture or trigger operations in reset, external clock or trigger mode), TIxFP1 is inverted (trigger operation in gated mode or encoder mode).

CC1NP=1, CC1P=1: non-inverted/both edges/ The circuit is sensitive to both TIxFP1 rising and falling edges (capture or trigger operations in reset, external clock or trigger mode), TIxFP1is not inverted (trigger operation in gated mode). This configuration must not be used in encoder mode.

CC1NP=1, CC1P=0: this configuration is reserved, it must not be used.

Note: This bit is not writable as soon as LOCK level 2 or 3 has been programmed (LOCK bits in TIMx_BDTR register).

On channels that have a complementary output, this bit is preloaded. If the CCPC bit is set in the TIMx_CR2 register then the CC1P active bit takes the new value from the preloaded bit only when a Commutation event is generated.

Bit 0 **CC1E**: Capture/Compare 1 output enable

0: Capture mode disabled / OC1 is not active (see below)

1: Capture mode enabled / OC1 signal is output on the corresponding output pin

When CC1 channel is configured as output, the OC1 level depends on MOE, OSSI, OSSR, OIS1, OIS1N and CC1NE bits, regardless of the CC1E bits state. Refer to *Table 208* for details.

Table 208. Output control bits for complementary OCx and OCxN channels with break feature (TIM16/17)

Control bits					Output states[1]	
MOE bit	OSSI bit	OSSR bit	CCxE bit	CCxNE bit	OCx output state	OCxN output state
1	X	X	0	0	Output Disabled (not driven by the timer: Hi-Z) OCx=0 OCxN=0, OCxN_EN=0	
		0	0	1	Output Disabled (not driven by the timer: Hi-Z) OCx=0	OCxREF + Polarity OCxN=OCxREF XOR CCxNP
		0	1	0	OCxREF + Polarity OCx=OCxREF XOR CCxP	Output Disabled (not driven by the timer: Hi-Z) OCxN=0
		X	1	1	OCREF + Polarity + dead-time	Complementary to OCREF (not OCREF) + Polarity + dead-time
		1	0	1	Off-State (output enabled with inactive state) OCx=CCxP	OCxREF + Polarity OCxN=OCxREF XOR CCxNP
		1	1	0	OCxREF + Polarity OCx=OCxREF XOR CCxP, OCx_EN=1	Off-State (output enabled with inactive state) OCxN=CCxNP, OCxN_EN=1
0	0	X	X	X	Output disabled (not driven by the timer anymore). The output state is defined by the GPIO controller and can be High, Low or Hi-Z.	
	1		0	0		
			0	1	Off-State (output enabled with inactive state) Asynchronously: OCx=CCxP, OCxN=CCxNP Then if the clock is present: OCx=OISx and OCxN=OISxN after a dead-time, assuming that OISx and OISxN do not correspond to OCX and OCxN both in active state	
			1	0		
			1	1		

1. When both outputs of a channel are not used (control taken over by GPIO controller), the OISx, OISxN, CCxP and CCxNP bits must be kept cleared.

Note: The state of the external I/O pins connected to the complementary OCx and OCxN channels depends on the OCx and OCxN channel state and AFIO registers.

32.7.9 TIMx counter (TIMx_CNT)(x = 16 to 17)

Address offset: 0x24

Reset value: 0x0000 0000

31	30	29	28	27	26	25	24	23	22	21	20	19	18	17	16
UIF CPY	Res.	Res.	Res.	Res.	Res.	Res.	Res.	Res.	Res.	Res.	Res.	Res.	Res.	Res.	Res.
r															

15	14	13	12	11	10	9	8	7	6	5	4	3	2	1	0
CNT[15:0]															
rw	rw	rw	rw	rw	rw	rw	rw	rw	rw	rw	rw	rw	rw	rw	rw

Bit 31 **UIFCPY**: UIF Copy

This bit is a read-only copy of the UIF bit of the TIMx_ISR register. If the UIFREMAP bit in TIMx_CR1 is reset, bit 31 is reserved and read as 0.

Bits 30:16 Reserved, must be kept at reset value.

Bits 15:0 **CNT[15:0]**: Counter value

32.7.10 TIMx prescaler (TIMx_PSC)(x = 16 to 17)

Address offset: 0x28

Reset value: 0x0000

15	14	13	12	11	10	9	8	7	6	5	4	3	2	1	0
PSC[15:0]															
rw	rw	rw	rw	rw	rw	rw	rw	rw	rw	rw	rw	rw	rw	rw	rw

Bits 15:0 **PSC[15:0]**: Prescaler value

The counter clock frequency (CK_CNT) is equal to f_{CK_PSC} / (PSC[15:0] + 1).
PSC contains the value to be loaded in the active prescaler register at each update event (including when the counter is cleared through UG bit of TIMx_EGR register or through trigger controller when configured in “reset mode”).

32.7.11 TIMx auto-reload register (TIMx_ARR)(x = 16 to 17)

Address offset: 0x2C

Reset value: 0xFFFF

15	14	13	12	11	10	9	8	7	6	5	4	3	2	1	0
ARR[15:0]															
rw	rw	rw	rw	rw	rw	rw	rw	rw	rw	rw	rw	rw	rw	rw	rw

Bits 15:0 **ARR[15:0]**: Auto-reload value

ARR is the value to be loaded in the actual auto-reload register.
Refer to the *Section 32.5.1: Time-base unit on page 1090* for more details about ARR update and behavior.
The counter is blocked while the auto-reload value is null.

32.7.12 TIMx repetition counter register (TIMx_RCR)(x = 16 to 17)

Address offset: 0x30

Reset value: 0x0000

15	14	13	12	11	10	9	8	7	6	5	4	3	2	1	0
Res.	Res.	Res.	Res.	Res.	Res.	Res.	Res.	REP[7:0]							
								rw	rw	rw	rw	rw	rw	rw	rw

Bits 15:8 Reserved, must be kept at reset value.

Bits 7:0 **REP[7:0]**: Repetition counter value

These bits allow the user to set-up the update rate of the compare registers (i.e. periodic transfers from preload to active registers) when preload registers are enable, as well as the update interrupt generation rate, if this interrupt is enable.

Each time the REP_CNT related downcounter reaches zero, an update event is generated and it restarts counting from REP value. As REP_CNT is reloaded with REP value only at the repetition update event U_RC, any write to the TIMx_RCR register is not taken in account until the next repetition update event.

It means in PWM mode (REP+1) corresponds to the number of PWM periods in edge-aligned mode.

32.7.13 TIMx capture/compare register 1 (TIMx_CCR1)(x = 16 to 17)

Address offset: 0x34

Reset value: 0x0000

15	14	13	12	11	10	9	8	7	6	5	4	3	2	1	0
CCR1[15:0]															
rw	rw	rw	rw	rw	rw	rw	rw	rw	rw	rw	rw	rw	rw	rw	rw

Bits 15:0 **CCR1[15:0]**: Capture/Compare 1 value

If channel CC1 is configured as output:

CCR1 is the value to be loaded in the actual capture/compare 1 register (preload value).

It is loaded permanently if the preload feature is not selected in the TIMx_CCMR1 register (bit OC1PE). Else the preload value is copied in the active capture/compare 1 register when an update event occurs.

The active capture/compare register contains the value to be compared to the counter TIMx_CNT and signaled on OC1 output.

If channel CC1 is configured as input:

CCR1 is the counter value transferred by the last input capture 1 event (IC1).

32.7.14 TIMx break and dead-time register (TIMx_BDTR)(x = 16 to 17)

Address offset: 0x44

Reset value: 0x0000 0000

31	30	29	28	27	26	25	24	23	22	21	20	19	18	17	16
Res.	Res.	Res.	Res.	Res.	Res.	Res.	Res.	Res.	Res.	Res.	Res.	Res.	Res.	Res.	Res.

15	14	13	12	11	10	9	8	7	6	5	4	3	2	1	0
MOE	AOE	BKP	BKE	OSSR	OSSI	LOCK[1:0]		DTG[7:0]							
rw	rw	rw	rw	rw	rw	rw	rw	rw	rw	rw	rw	rw	rw	rw	rw

Note: As the AOE, BKP, BKE, OSSI, OSSR and DTG[7:0] bits may be write-locked depending on the LOCK configuration, it may be necessary to configure all of them during the first write access to the TIMx_BDTR register.

Bits 31:20 Reserved, must be kept at reset value.

Bits 19:16 Reserved, must be kept at reset value.

Bit 15 **MOE**: Main output enable

This bit is cleared asynchronously by hardware as soon as the break input is active. It is set by software or automatically depending on the AOE bit. It is acting only on the channels which are configured in output.
0: OC and OCN outputs are disabled or forced to idle state depending on the OSSI bit.
1: OC and OCN outputs are enabled if their respective enable bits are set (CCxE, CCxNE in TIMx_CCER register)
See OC/OCN enable description for more details (*Section 32.7.8: TIMx capture/compare enable register (TIMx_CCER)(x = 16 to 17) on page 1157*).

Bit 14 **AOE**: Automatic output enable

0: MOE can be set only by software
1: MOE can be set by software or automatically at the next update event (if the break input is not be active)

Note: This bit can not be modified as long as LOCK level 1 has been programmed (LOCK bits in TIMx_BDTR register).

Bit 13 **BKP**: Break polarity

0: Break input BRK is active low
1: Break input BRK is active high

Note: This bit can not be modified as long as LOCK level 1 has been programmed (LOCK bits in TIMx_BDTR register).

Any write operation to this bit takes a delay of 1 APB clock cycle to become effective.

Bit 12 **BKE**: Break enable

0: Break inputs (BRK and CCS clock failure event) disabled
1; Break inputs (BRK and CCS clock failure event) enabled

Note: This bit cannot be modified when LOCK level 1 has been programmed (LOCK bits in TIMx_BDTR register).

Any write operation to this bit takes a delay of 1 APB clock cycle to become effective.

Bit 11 **OSSR**: Off-state selection for Run mode

This bit is used when MOE=1 on channels that have a complementary output which are configured as outputs. OSSR is not implemented if no complementary output is implemented in the timer.

See OC/OCN enable description for more details (*Section 32.7.8: TIMx capture/compare enable register (TIMx_CCER)(x = 16 to 17) on page 1157*).

0: When inactive, OC/OCN outputs are disabled (the timer releases the output control which is taken over by the AFIO logic, which forces a Hi-Z state)

1: When inactive, OC/OCN outputs are enabled with their inactive level as soon as CCxE=1 or CCxNE=1 (the output is still controlled by the timer).

Note: This bit can not be modified as soon as the LOCK level 2 has been programmed (LOCK bits in TIMx_BDTR register).

Bit 10 **OSSI**: Off-state selection for Idle mode

This bit is used when MOE=0 on channels configured as outputs.

See OC/OCN enable description for more details (*Section 32.7.8: TIMx capture/compare enable register (TIMx_CCER)(x = 16 to 17) on page 1157*).

0: When inactive, OC/OCN outputs are disabled (OC/OCN enable output signal=0)

1: When inactive, OC/OCN outputs are forced first with their idle level as soon as CCxE=1 or CCxNE=1. OC/OCN enable output signal=1)

Note: This bit can not be modified as soon as the LOCK level 2 has been programmed (LOCK bits in TIMx_BDTR register).

Bits 9:8 **LOCK[1:0]**: Lock configuration

These bits offer a write protection against software errors.

00: LOCK OFF - No bit is write protected

01: LOCK Level 1 = DTG bits in TIMx_BDTR register, OISx and OISxN bits in TIMx_CR2 register and BKE/BKP/AOE bits in TIMx_BDTR register can no longer be written.

10: LOCK Level 2 = LOCK Level 1 + CC Polarity bits (CCxP/CCxNP bits in TIMx_CCER register, as long as the related channel is configured in output through the CCxS bits) as well as OSSR and OSSI bits can no longer be written.

11: LOCK Level 3 = LOCK Level 2 + CC Control bits (OCxM and OCxPE bits in TIMx_CCMRx registers, as long as the related channel is configured in output through the CCxS bits) can no longer be written.

Note: The LOCK bits can be written only once after the reset. Once the TIMx_BDTR register has been written, their content is frozen until the next reset.

Bits 7:0 **DTG[7:0]**: Dead-time generator setup

This bit-field defines the duration of the dead-time inserted between the complementary outputs. DT correspond to this duration.

DTG[7:5]=0xx => DT=DTG[7:0]x t_{dtg} with $t_{dtg}=t_{DTS}$

DTG[7:5]=10x => DT=(64+DTG[5:0])xt_{dtg} with $T_{dtg}=2xt_{DTS}$

DTG[7:5]=110 => DT=(32+DTG[4:0])xt_{dtg} with $T_{dtg}=8xt_{DTS}$

DTG[7:5]=111 => DT=(32+DTG[4:0])xt_{dtg} with $T_{dtg}=16xt_{DTS}$

Example if T_{DTS}=125ns (8MHz), dead-time possible values are:

0 to 15875 ns by 125 ns steps,

16 µs to 31750 ns by 250 ns steps,

32 µs to 63 µs by 1 µs steps,

64 µs to 126 µs by 2 µs steps

Note: This bit-field can not be modified as long as LOCK level 1, 2 or 3 has been programmed (LOCK bits in TIMx_BDTR register).

32.7.15 TIMx DMA control register (TIMx_DCR)(x = 16 to 17)

Address offset: 0x48

Reset value: 0x0000

15	14	13	12	11	10	9	8	7	6	5	4	3	2	1	0
Res.	Res.	Res.	DBL[4:0]					Res.	Res.	Res.	DBA[4:0]				
			rw	rw	rw	rw	rw				rw	rw	rw	rw	rw

Bits 15:13 Reserved, must be kept at reset value.

Bits 12:8 **DBL[4:0]**: DMA burst length

This 5-bit field defines the length of DMA transfers (the timer recognizes a burst transfer when a read or a write access is done to the TIMx_DMAR address), i.e. the number of transfers. Transfers can be in half-words or in bytes (see example below).
00000: 1 transfer,
00001: 2 transfers,
00010: 3 transfers,
...
10001: 18 transfers.

Bits 7:5 Reserved, must be kept at reset value.

Bits 4:0 **DBA[4:0]**: DMA base address

This 5-bit field defines the base-address for DMA transfers (when read/write access are done through the TIMx_DMAR address). DBA is defined as an offset starting from the address of the TIMx_CR1 register.
Example:
00000: TIMx_CR1,
00001: TIMx_CR2,
00010: TIMx_SMCR,
...

Example: Let us consider the following transfer: DBL = 7 transfers and DBA = TIMx_CR1. In this case the transfer is done to/from 7 registers starting from the TIMx_CR1 address.

32.7.16 TIMx DMA address for full transfer (TIMx_DMAR)(x = 16 to 17)

Address offset: 0x4C

Reset value: 0x0000

15	14	13	12	11	10	9	8	7	6	5	4	3	2	1	0
DMAB[15:0]															
rw	rw	rw	rw	rw	rw	rw	rw	rw	rw	rw	rw	rw	rw	rw	rw

Bits 15:0 **DMAB[15:0]**: DMA register for burst accesses

A read or write operation to the DMAR register accesses the register located at the address

(TIMx_CR1 address) + (DBA + DMA index) x 4

where TIMx_CR1 address is the address of the control register 1, DBA is the DMA base address configured in TIMx_DCR register, DMA index is automatically controlled by the DMA transfer, and ranges from 0 to DBL (DBL configured in TIMx_DCR).

32.7.17 TIM16 option register 1 (TIM16_OR1)

Address offset: 0x50

Reset value: 0x0000

31	30	29	28	27	26	25	24	23	22	21	20	19	18	17	16
Res.	Res.	Res.	Res.	Res.	Res.	Res.	Res.	Res.	Res.	Res.	Res.	Res.	Res.	Res.	Res.

15	14	13	12	11	10	9	8	7	6	5	4	3	2	1	0
Res.	Res.	Res.	Res.	Res.	Res.	Res.	Res.	Res.	Res.	Res.	Res.	Res.	TI1_RMP[2:0]		
													rw	rw	rw

Bits 31:3 Reserved, must be kept at reset value.

Bits2:0 **TI1_RMP[2:0]**: Input capture 1 remap

000: TIM16 input capture 1 is connected to I/O
001: TIM16 input capture 1 is connected to LSI
010: TIM16 input capture 1 is connected to LSE
011: TIM16 input capture 1 is connected to RTC wakeup interrupt
100: TIM16 input capture 1 is connected to MSI(1)
101: TIM16 input capture 1 is connected to HSE/32(1)(2)
110: TIM16 input capture 1 is connected to MCO(1)
111: reserved

1. Extended Remap. This feature is not available on some devices, Refer to *Section 32.4: Implementation*. When not available, the corresponding values are reserved.
2. To use this input the RTC must be enable and the HSE/32 must be selected as RTC clock source.

32.7.18 TIM16 option register 2 (TIM16_OR2)

Address offset: 0x60

Reset value: 0x0000 0001

31	30	29	28	27	26	25	24	23	22	21	20	19	18	17	16
Res.	Res.	Res.	Res.	Res.	Res.	Res.	Res.	Res.	Res.	Res.	Res.	Res.	Res.	Res.	Res.

15	14	13	12	11	10	9	8	7	6	5	4	3	2	1	0
Res.	Res.	Res.	Res.	BKCMP2P	BKCMP1P	BKINP	BKDF1BK1E	Res.	Res.	Res.	Res.	Res.	BKCMP2E	BKCMP1E	BKINE
				rw	rw	rw	rw						rw	rw	rw

Bits 31:12 Reserved, must be kept at reset value.

Bit 11 **BKCMP2P**: BRK COMP2 input polarity

This bit selects the COMP2 input sensitivity. It must be programmed together with the BKP polarity bit.

0: COMP2 input is active low

1: COMP2 input is active high

Note: This bit can not be modified as long as LOCK level 1 has been programmed (LOCK bits in TIMx_BDTR register).

Bit 10 **BKCMP1P**: BRK COMP1 input polarity

This bit selects the COMP1 input sensitivity. It must be programmed together with the BKP polarity bit.

0: COMP1 input is active low

1: COMP1 input is active high

Note: This bit can not be modified as long as LOCK level 1 has been programmed (LOCK bits in TIMx_BDTR register).

Bit 9 **BKINP**: BRK BKIN input polarity

This bit selects the BKIN alternate function input sensitivity. It must be programmed together with the BKP polarity bit.

0: BKIN input is active low

1: BKIN input is active high

Note: This bit can not be modified as long as LOCK level 1 has been programmed (LOCK bits in TIMx_BDTR register).

Bit 8 **BKDF1BK1E**: BRK dfsdm1_break[1] enable

This bit enables the dfsdm1_break[1] for the timer's BRK input. dfsdm1_break[1] output is 'ORed' with the other BRK sources.

0: dfsdm1_break[1] input disabled

1: dfsdm1_break[1] input enabled

Note: This bit can not be modified as long as LOCK level 1 has been programmed (LOCK bits in TIMx_BDTR register).

Bits 7:3 Reserved, must be kept at reset value.

Bit 2 **BKCMP2E**: BRK COMP2 enable

This bit enables the COMP2 for the timer's BRK input. COMP2 output is 'ORed' with the other BRK sources.

0: COMP2 input disabled

1: COMP2 input enabled

Note: This bit can not be modified as long as LOCK level 1 has been programmed (LOCK bits in TIMx_BDTR register).

Bit 1 **BKCMP1E**: BRK COMP1 enable

This bit enables the COMP1 for the timer's BRK input. COMP1 output is 'ORed' with the other BRK sources.

0: COMP1 input disabled

1: COMP1 input enabled

Note: This bit can not be modified as long as LOCK level 1 has been programmed (LOCK bits in TIMx_BDTR register).

Bit 0 **BKINE**: BRK BKIN input enable

This bit enables the BKIN alternate function input for the timer's BRK input. BKIN input is 'ORed' with the other BRK sources.

0: BKIN input disabled

1: BKIN input enabled

Note: This bit can not be modified as long as LOCK level 1 has been programmed (LOCK bits in TIMx_BDTR register).

32.7.19 TIM17 option register 1 (TIM17_OR1)

Address offset: 0x50

Reset value: 0x0000

31	30	29	28	27	26	25	24	23	22	21	20	19	18	17	16
Res.	Res.	Res.	Res.	Res.	Res.	Res.	Res.	Res.	Res.	Res.	Res.	Res.	Res.	Res.	Res.
15	14	13	12	11	10	9	8	7	6	5	4	3	2	1	0
Res.	Res.	Res.	Res.	Res.	Res.	Res.	Res.	Res.	Res.	Res.	Res.	Res.	Res.	TI1_RMP[1:0]	
														rw	rw

Bits 31:2 Reserved, must be kept at reset value.

Bits1:0 **TI1_RMP[1:0]**: Input capture 1 remap

00: TIM17 input capture 1 is connected to I/O

01: TIM17 input capture 1 is connected to MSI

10: TIM17 input capture 1 is connected to HSE/32

11: TIM17 input capture 1 is connected to MCO

32.7.20 TIM17 option register 2 (TIM17_OR2)

Address offset: 0x60

Reset value: 0x0000 0001

31	30	29	28	27	26	25	24	23	22	21	20	19	18	17	16
Res.	Res.	Res.	Res.	Res.	Res.	Res.	Res.	Res.	Res.	Res.	Res.	Res.	Res.	Res.	Res.

15	14	13	12	11	10	9	8	7	6	5	4	3	2	1	0
Res.	Res.	Res.	Res.	BKCMP2P	BKCMP1P	BKINP	BKDF1BK2E	Res.	Res.	Res.	Res.	Res.	BKCMP2E	BKCMP1E	BKINE
				rw	rw	rw	rw						rw	rw	rw

Bits 31:12 Reserved, must be kept at reset value.

Bit 11 **BKCMP2P**: BRK COMP2 input polarity

This bit selects the COMP2 input sensitivity. It must be programmed together with the BKP polarity bit.

0: COMP2 input is active low

1: COMP2 input is active high

Note: This bit can not be modified as long as LOCK level 1 has been programmed (LOCK bits in TIMx_BDTR register).

Bit 10 **BKCMP1P**: BRK COMP1 input polarity

This bit selects the COMP1 input sensitivity. It must be programmed together with the BKP polarity bit.

0: COMP1 input is active low

1: COMP1 input is active high

Note: This bit can not be modified as long as LOCK level 1 has been programmed (LOCK bits in TIMx_BDTR register).

Bit 9 **BKINP**: BRK BKIN input polarity

This bit selects the BKIN alternate function input sensitivity. It must be programmed together with the BKP polarity bit.

0: BKIN input is active low

1: BKIN input is active high

Note: This bit can not be modified as long as LOCK level 1 has been programmed (LOCK bits in TIMx_BDTR register).

Bit 8 **BKDF1BK2E**: BRK dfsdm1_break[2] enable

This bit enables the dfsdm1_break[2] for the timer's BRK input. dfsdm1_break[2] output is 'ORed' with the other BRK sources.

0: dfsdm1_break[2] input disabled

1: dfsdm1_break[2] input enabled

Note: This bit can not be modified as long as LOCK level 1 has been programmed (LOCK bits in TIMx_BDTR register).

Bits 7:3 Reserved, must be kept at reset value.

Bit 2 **BKCMP2E**: BRK COMP2 enable

This bit enables the COMP2 for the timer's BRK input. COMP2 output is 'ORed' with the other BRK sources.

0: COMP2 input disabled

1: COMP2 input enabled

Note: This bit can not be modified as long as LOCK level 1 has been programmed (LOCK bits in TIMx_BDTR register).

Bit 1 **BKCMP1E**: BRK COMP1 enable

This bit enables the COMP1 for the timer's BRK input. COMP1 output is 'ORed' with the other BRK sources.

0: COMP1 input disabled

1: COMP1 input enabled

Note: This bit can not be modified as long as LOCK level 1 has been programmed (LOCK bits in TIMx_BDTR register).

Bit 0 **BKINE**: BRK BKIN input enable

This bit enables the BKIN alternate function input for the timer's BRK input. BKIN input is 'ORed' with the other BRK sources.

0: BKIN input disabled

1: BKIN input enabled

Note: This bit can not be modified as long as LOCK level 1 has been programmed (LOCK bits in TIMx_BDTR register).

32.7.21 TIM16/TIM17 register map

TIM16/TIM17 registers are mapped as 16-bit addressable registers as described in the table below:

Table 209. TIM16/TIM17 register map and reset values

Offset	Register name	31	30	29	28	27	26	25	24	23	22	21	20	19	18	17	16	15	14	13	12	11	10	9	8	7	6	5	4	3	2	1	0
0x00	**TIMx_CR1**	Res.	Res.	Res.	Res.	Res.	Res.	Res.	Res.	Res.	Res.	Res.	Res.	Res.	Res.	Res.	Res.	Res.	Res.	Res.	Res.	UIFREMA	Res.	CKD [1:0]		ARPE	Res.	Res.	Res.	OPM	URS	UDIS	CEN
	Reset value																					0		0	0	0				0	0	0	0
0x04	**TIMx_CR2**	Res.	Res.	Res.	Res.	Res.	Res.	Res.	Res.	Res.	Res.	Res.	Res.	Res.	Res.	Res.	Res.	Res.	Res.	Res.	Res.	Res.	Res.	OIS1N	OIS1	Res.	Res.	Res.	Res.	CCDS	CCUS	Res.	CCPC
	Reset value																							0	0					0	0		0
0x0C	**TIMx_DIER**	Res.	Res.	Res.	Res.	Res.	Res.	Res.	Res.	Res.	Res.	Res.	Res.	Res.	Res.	Res.	Res.	Res.	Res.	Res.	Res.	Res.	Res.	CC1DE	UDE	BIE	Res.	COMIE	Res.	Res.	Res.	CC1IE	UIE
	Reset value																							0	0	0		0				0	0
0x10	**TIMx_SR**	Res.	Res.	Res.	Res.	Res.	Res.	Res.	Res.	Res.	Res.	Res.	Res.	Res.	Res.	Res.	Res.	Res.	Res.	Res.	Res.	Res.	Res.	CC1OF	Res.	BIF	Res.	COMIF	Res.	Res.	Res.	CC1IF	UIF
	Reset value																							0		0		0				0	0
0x14	**TIMx_EGR**	Res.	Res.	Res.	Res.	Res.	Res.	Res.	Res.	Res.	Res.	Res.	Res.	Res.	Res.	Res.	Res.	Res.	Res.	Res.	Res.	Res.	Res.	Res.	Res.	BG	Res.	COMG	Res.	Res.	Res.	CC1G	UG
	Reset value																									0		0				0	0
0x18	**TIMx_CCMR1** Output Compare mode	Res.	Res.	Res.	Res.	Res.	Res.	Res.	Res.	Res.	Res.	Res.	Res.	Res.	Res.	Res.	OC1M[3]	Res.	Res.	Res.	Res.	Res.	Res.	Res.	Res.	Res.	OC1M [2:0]			OC1PE	OC1FE	CC1S [1:0]	
	Reset value																0										0	0	0	0	0	0	0
	TIMx_CCMR1 Input Capture mode	Res.	Res.	Res.	Res.	Res.	Res.	Res.	Res.	Res.	Res.	Res.	Res.	Res.	Res.	Res.	Res.	Res.	Res.	Res.	Res.	Res.	Res.	Res.	Res.	IC1F[3:0]				IC1PSC [1:0]		CC1S [1:0]	
	Reset value																									0	0	0	0	0	0	0	0
0x20	**TIMx_CCER**	Res.	Res.	Res.	Res.	Res.	Res.	Res.	Res.	Res.	Res.	Res.	Res.	Res.	Res.	Res.	Res.	Res.	Res.	Res.	Res.	Res.	Res.	Res.	Res.	Res.	Res.	Res.	Res.	CC1NP	CC1NE	CC1P	CC1E
	Reset value																													0	0	0	0
0x24	**TIMx_CNT**	UIFCPY or Res.	Res.	Res.	Res.	Res.	Res.	Res.	Res.	Res.	Res.	Res.	Res.	Res.	Res.	Res.	Res.	CNT[15:0]															
	Reset value	0																0	0	0	0	0	0	0	0	0	0	0	0	0	0	0	0
0x28	**TIMx_PSC**	Res.	Res.	Res.	Res.	Res.	Res.	Res.	Res.	Res.	Res.	Res.	Res.	Res.	Res.	Res.	Res.	PSC[15:0]															
	Reset value																	0	0	0	0	0	0	0	0	0	0	0	0	0	0	0	0
0x2C	**TIMx_ARR**	Res.	Res.	Res.	Res.	Res.	Res.	Res.	Res.	Res.	Res.	Res.	Res.	Res.	Res.	Res.	Res.	ARR[15:0]															
	Reset value																	1	1	1	1	1	1	1	1	1	1	1	1	1	1	1	1

Table 209. TIM16/TIM17 register map and reset values (continued)

Offset	Register name	31	30	29	28	27	26	25	24	23	22	21	20	19	18	17	16	15	14	13	12	11	10	9	8	7	6	5	4	3	2	1	0
0x30	TIMx_RCR	Res.	Res.	Res.	Res.	Res.	Res.	Res.	Res.	Res.	Res.	Res.	Res.	Res.	Res.	Res.	Res.	Res.	Res.	Res.	Res.	Res.	Res.	Res.	Res.	REP[7:0]							
	Reset value																									0	0	0	0	0	0	0	0
0x34	TIMx_CCR1	Res.	Res.	Res.	Res.	Res.	Res.	Res.	Res.	Res.	Res.	Res.	Res.	Res.	Res.	Res.	Res.	CCR1[15:0]															
	Reset value																	0	0	0	0	0	0	0	0	0	0	0	0	0	0	0	0
0x44	TIMx_BDTR	Res.	Res.	Res.	Res.	Res.	Res.	Res.	Res.	Res.	Res.	Res.	Res.	Res.	Res.	Res.	Res.	MOE	AOE	BKP	BKE	OSSR	OSSI	LOCK [1:0]		DTG[7:0]							
	Reset value																	0	0	0	0	0	0	0	0	0	0	0	0	0	0	0	0
0x48	TIMx_DCR	Res.	Res.	Res.	Res.	Res.	Res.	Res.	Res.	Res.	Res.	Res.	Res.	Res.	Res.	Res.	Res.	Res.	Res.	Res.	DBL[4:0]					Res.	Res.	Res.	DBA[4:0]				
	Reset value																				0	0	0	0	0				0	0	0	0	0
0x4C	TIMx_DMAR	Res.	Res.	Res.	Res.	Res.	Res.	Res.	Res.	Res.	Res.	Res.	Res.	Res.	Res.	Res.	Res.	DMAB[15:0]															
	Reset value																	0	0	0	0	0	0	0	0	0	0	0	0	0	0	0	0
0x50	TIM16_OR1	Res.	Res.	Res.	Res.	Res.	Res.	Res.	Res.	Res.	Res.	Res.	Res.	Res.	Res.	Res.	Res.	Res.	Res.	Res.	Res.	Res.	Res.	Res.	Res.	Res.	Res.	Res.	Res.	Res.	Res.	TI1_RMP [1:0]	
	Reset value																															0	0
0x60	TIM16_OR2	Res.	Res.	Res.	Res.	Res.	Res.	Res.	Res.	Res.	Res.	Res.	Res.	Res.	Res.	Res.	Res.	Res.	Res.	Res.	Res.	BKCMP2P	BKCMP1P	BKINP	BKDF1BK1E	Res.	Res.	Res.	Res.	Res.	BKCMP2E	BKCMP1E	BKINE
	Reset value																					0	0	0	0						0	0	1
0x50	TIM17_OR1	Res.	Res.	Res.	Res.	Res.	Res.	Res.	Res.	Res.	Res.	Res.	Res.	Res.	Res.	Res.	Res.	Res.	Res.	Res.	Res.	Res.	Res.	Res.	Res.	Res.	Res.	Res.	Res.	Res.	Res.	TI1_RMP [1:0]	
	Reset value																															0	0
0x60	TIM17_OR2	Res.	Res.	Res.	Res.	Res.	Res.	Res.	Res.	Res.	Res.	Res.	Res.	Res.	Res.	Res.	Res.	Res.	Res.	Res.	Res.	BKCMP2P	BKCMP1P	BKINP	BKDF1BK2E	Res.	Res.	Res.	Res.	Res.	BKCMP2E	BKCMP1E	BKINE
	Reset value																					0	0	0	0						0	0	1

Refer to *Section 2.2 on page 75* for the register boundary addresses.

33 Basic timers (TIM6/TIM7)

33.1 TIM6/TIM7 introduction

The basic timers TIM6 and TIM7 consist of a 16-bit auto-reload counter driven by a programmable prescaler.

They may be used as generic timers for time base generation but they are also specifically used to drive the digital-to-analog converter (DAC). In fact, the timers are internally connected to the DAC and are able to drive it through their trigger outputs.

The timers are completely independent, and do not share any resources.

33.2 TIM6/TIM7 main features

Basic timer (TIM6/TIM7) features include:

- 16-bit auto-reload upcounter
- 16-bit programmable prescaler used to divide (also “on the fly”) the counter clock frequency by any factor between 1 and 65535
- Synchronization circuit to trigger the DAC
- Interrupt/DMA generation on the update event: counter overflow

Figure 366. Basic timer block diagram

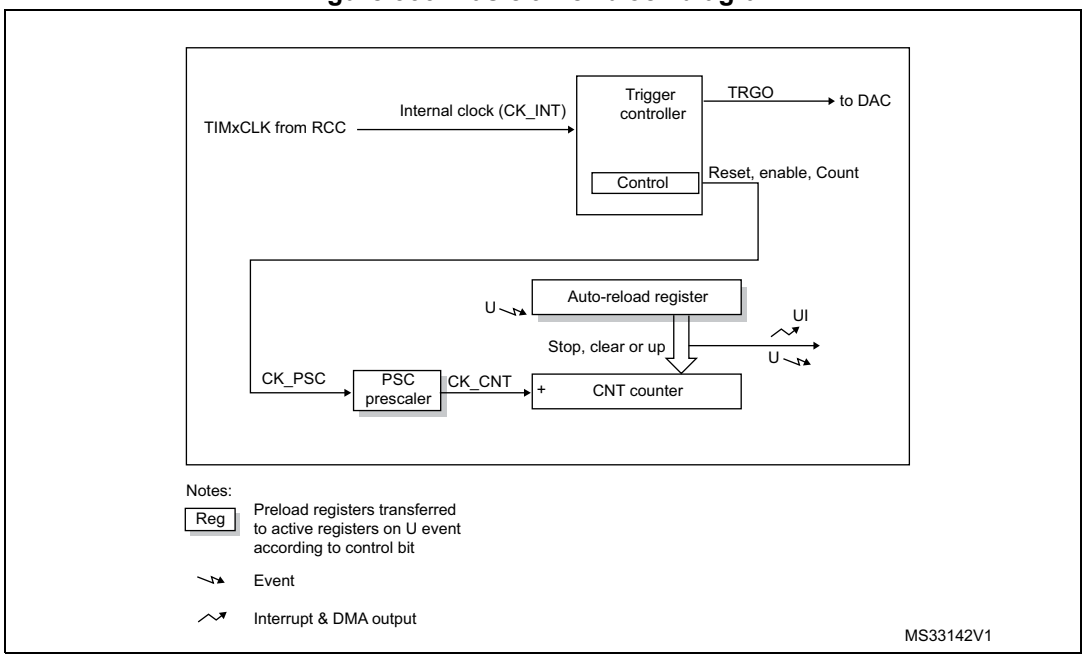

33.3 TIM6/TIM7 functional description

33.3.1 Time-base unit

The main block of the programmable timer is a 16-bit upcounter with its related auto-reload register. The counter clock can be divided by a prescaler.

The counter, the auto-reload register and the prescaler register can be written or read by software. This is true even when the counter is running.

The time-base unit includes:

- Counter Register (TIMx_CNT)
- Prescaler Register (TIMx_PSC)
- Auto-Reload Register (TIMx_ARR)

The auto-reload register is preloaded. The preload register is accessed each time an attempt is made to write or read the auto-reload register. The contents of the preload register are transferred into the shadow register permanently or at each update event UEV, depending on the auto-reload preload enable bit (ARPE) in the TIMx_CR1 register. The update event is sent when the counter reaches the overflow value and if the UDIS bit equals 0 in the TIMx_CR1 register. It can also be generated by software. The generation of the update event is described in detail for each configuration.

The counter is clocked by the prescaler output CK_CNT, which is enabled only when the counter enable bit (CEN) in the TIMx_CR1 register is set.

Note that the actual counter enable signal CNT_EN is set 1 clock cycle after CEN.

Prescaler description

The prescaler can divide the counter clock frequency by any factor between 1 and 65536. It is based on a 16-bit counter controlled through a 16-bit register (in the TIMx_PSC register). It can be changed on the fly as the TIMx_PSC control register is buffered. The new prescaler ratio is taken into account at the next update event.

Figure 367 and *Figure 368* give some examples of the counter behavior when the prescaler ratio is changed on the fly.

Figure 367. Counter timing diagram with prescaler division change from 1 to 2

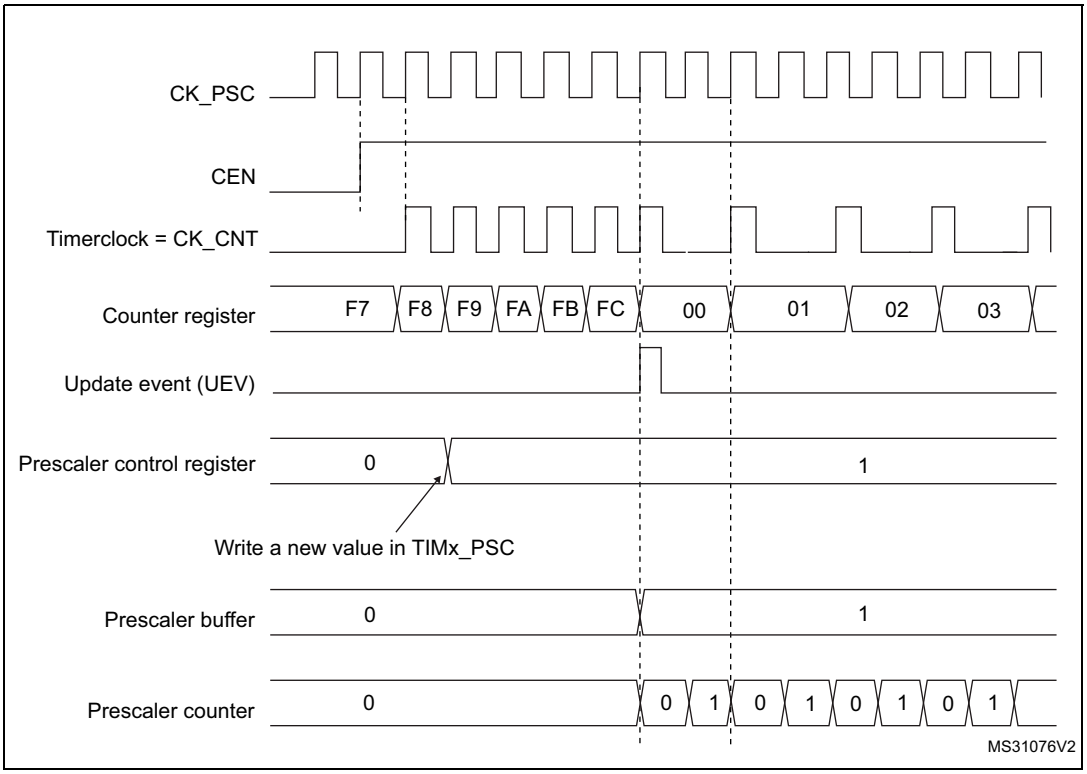

Figure 368. Counter timing diagram with prescaler division change from 1 to 4

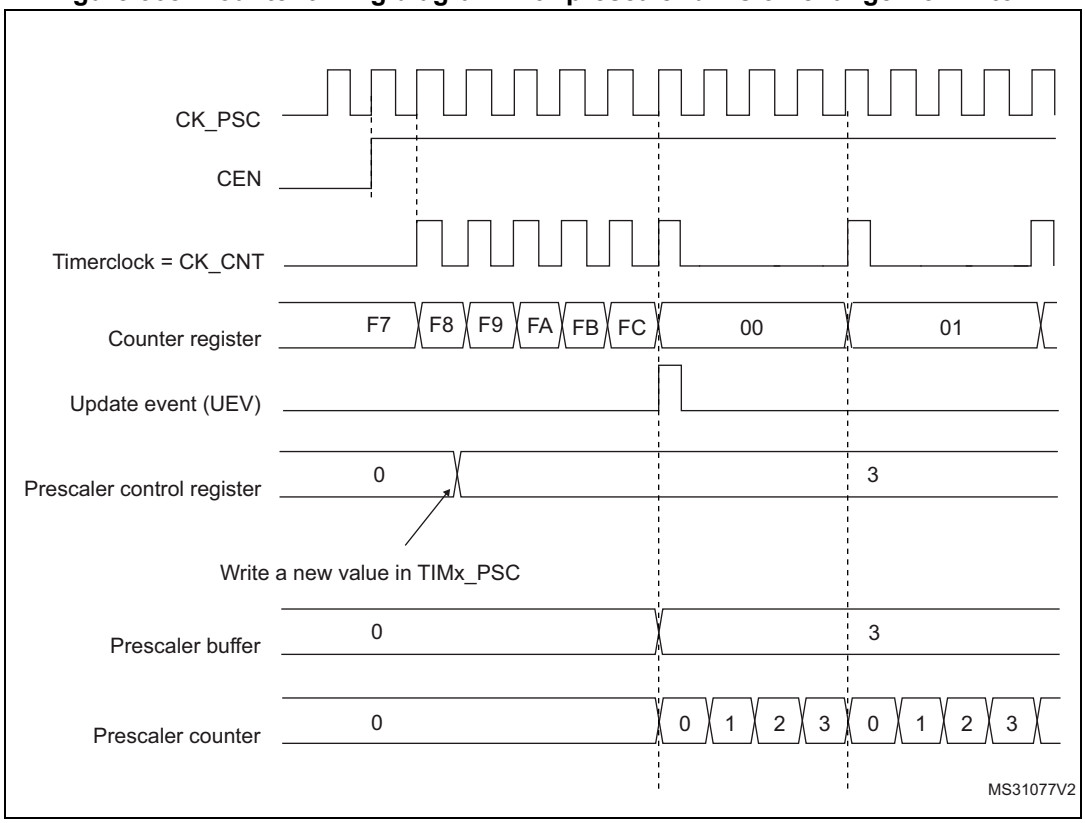

33.3.2 Counting mode

The counter counts from 0 to the auto-reload value (contents of the TIMx_ARR register), then restarts from 0 and generates a counter overflow event.

An update event can be generate at each counter overflow or by setting the UG bit in the TIMx_EGR register (by software or by using the slave mode controller).

The UEV event can be disabled by software by setting the UDIS bit in the TIMx_CR1 register. This avoids updating the shadow registers while writing new values into the preload registers. In this way, no update event occurs until the UDIS bit has been written to 0, however, the counter and the prescaler counter both restart from 0 (but the prescale rate does not change). In addition, if the URS (update request selection) bit in the TIMx_CR1 register is set, setting the UG bit generates an update event UEV, but the UIF flag is not set (so no interrupt or DMA request is sent).

When an update event occurs, all the registers are updated and the update flag (UIF bit in the TIMx_SR register) is set (depending on the URS bit):

- The buffer of the prescaler is reloaded with the preload value (contents of the TIMx_PSC register)
- The auto-reload shadow register is updated with the preload value (TIMx_ARR)

The following figures show some examples of the counter behavior for different clock frequencies when TIMx_ARR = 0x36.

Figure 369. Counter timing diagram, internal clock divided by 1

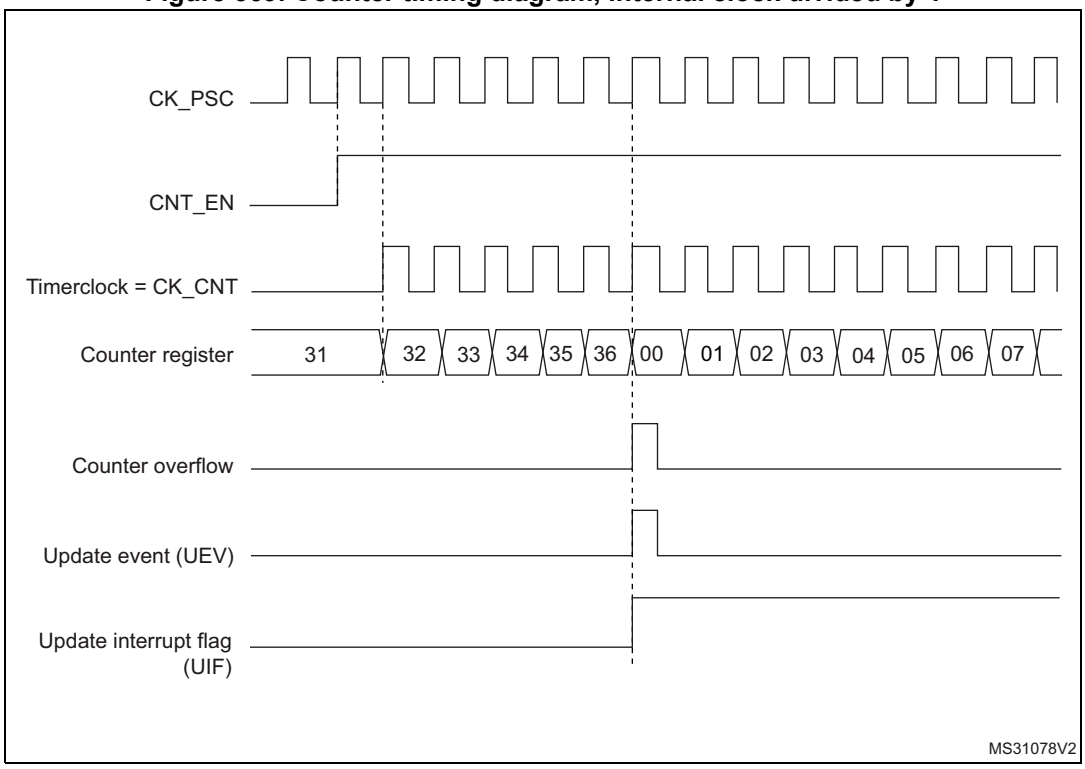

Figure 370. Counter timing diagram, internal clock divided by 2

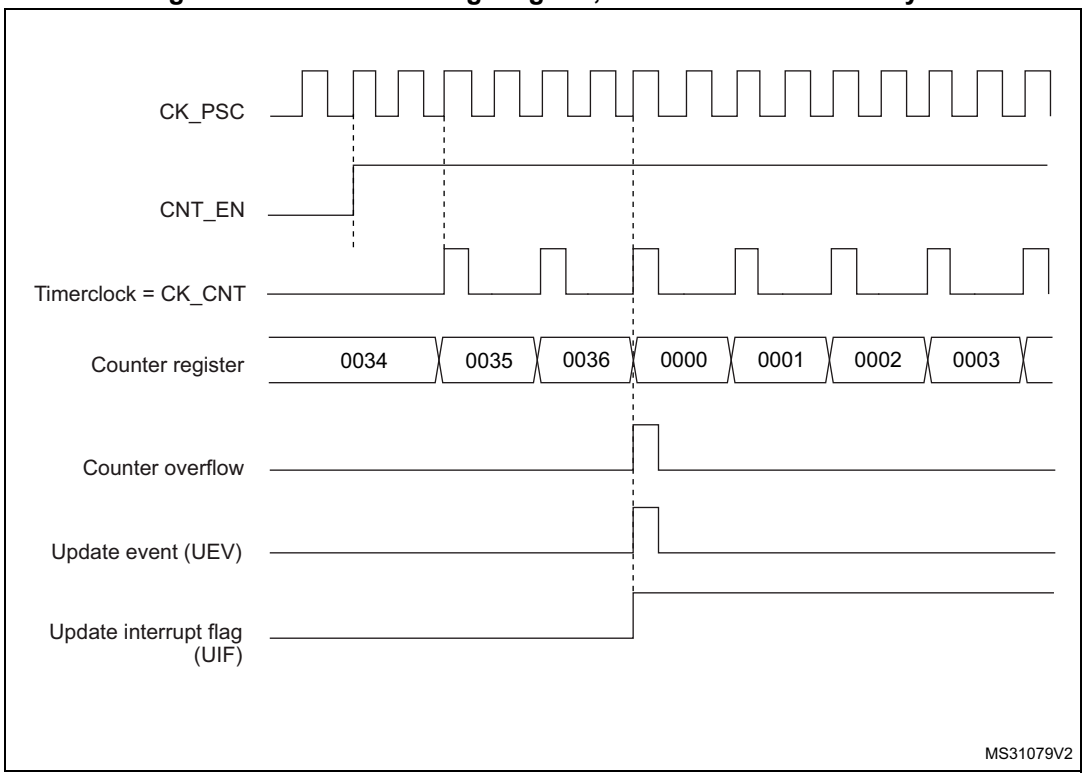

Figure 371. Counter timing diagram, internal clock divided by 4

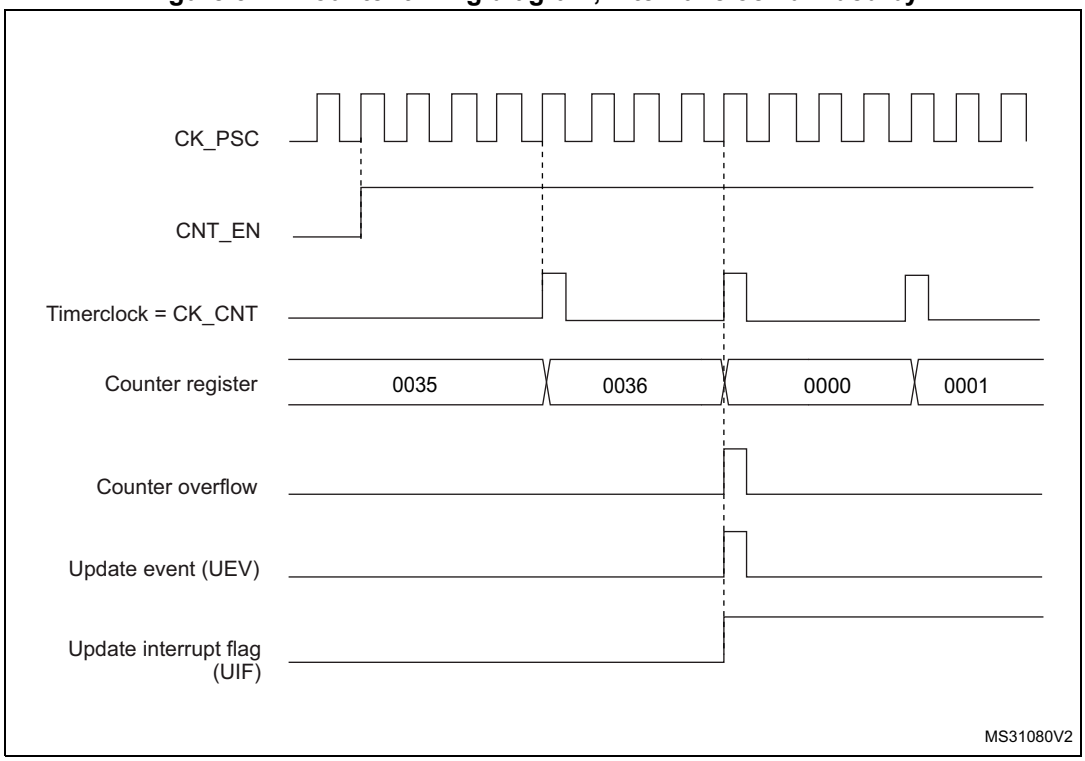

Figure 372. Counter timing diagram, internal clock divided by N

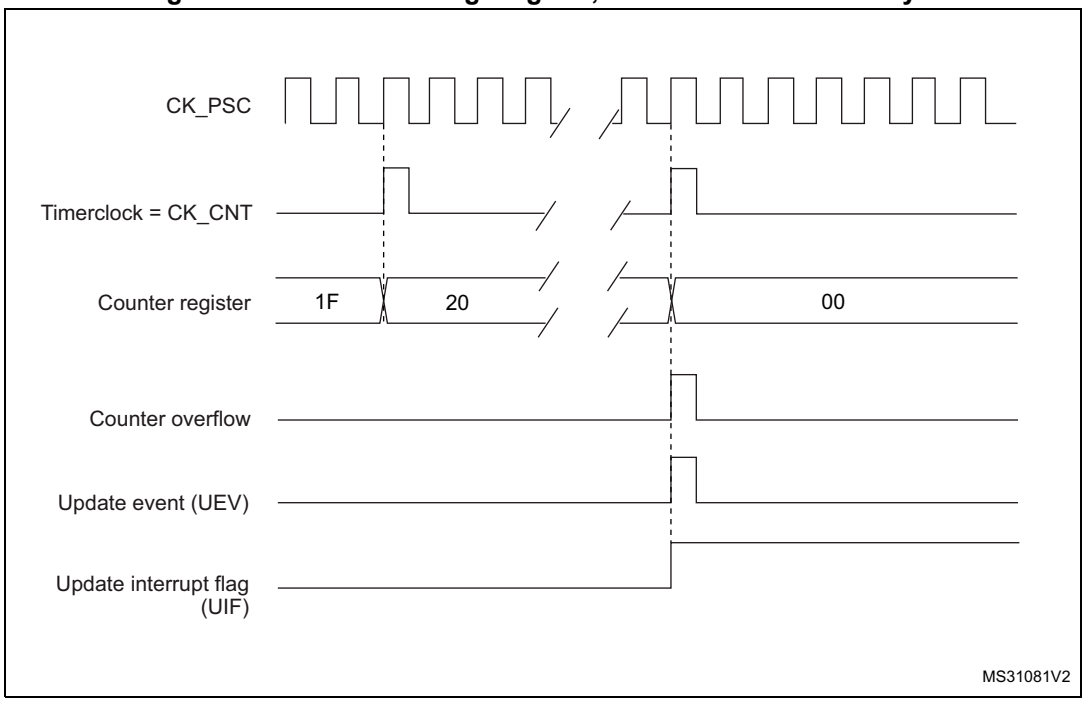

Figure 373. Counter timing diagram, update event when ARPE = 0 (TIMx_ARR not preloaded)

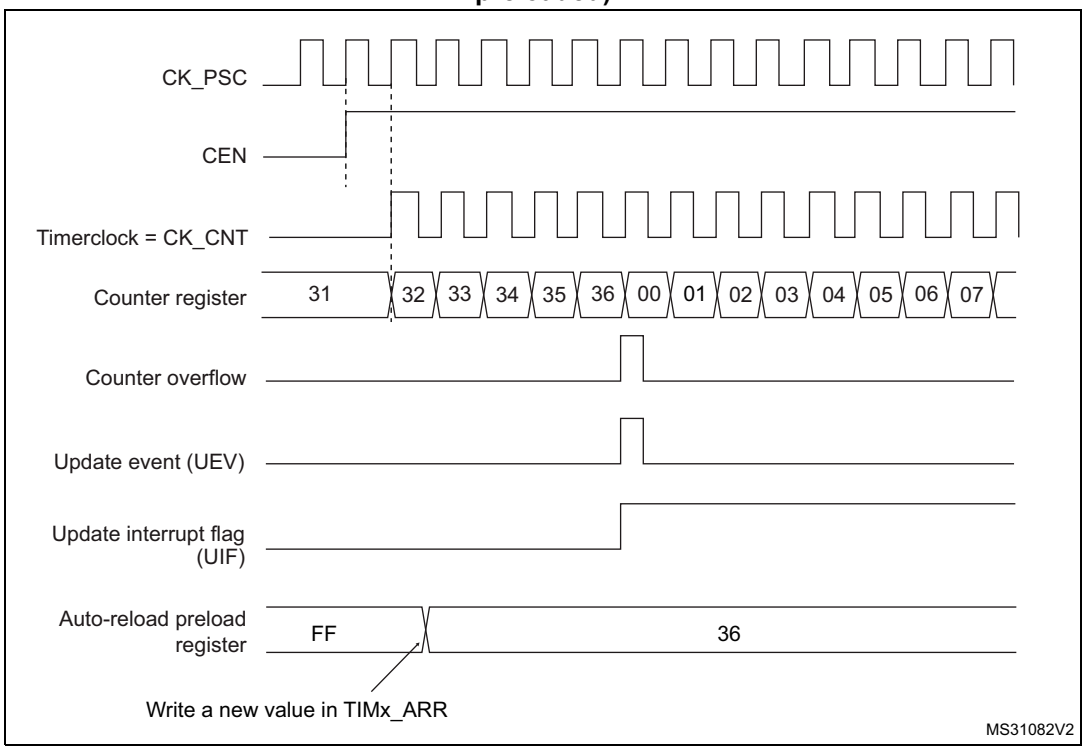

Figure 374. Counter timing diagram, update event when ARPE=1 (TIMx_ARR preloaded)

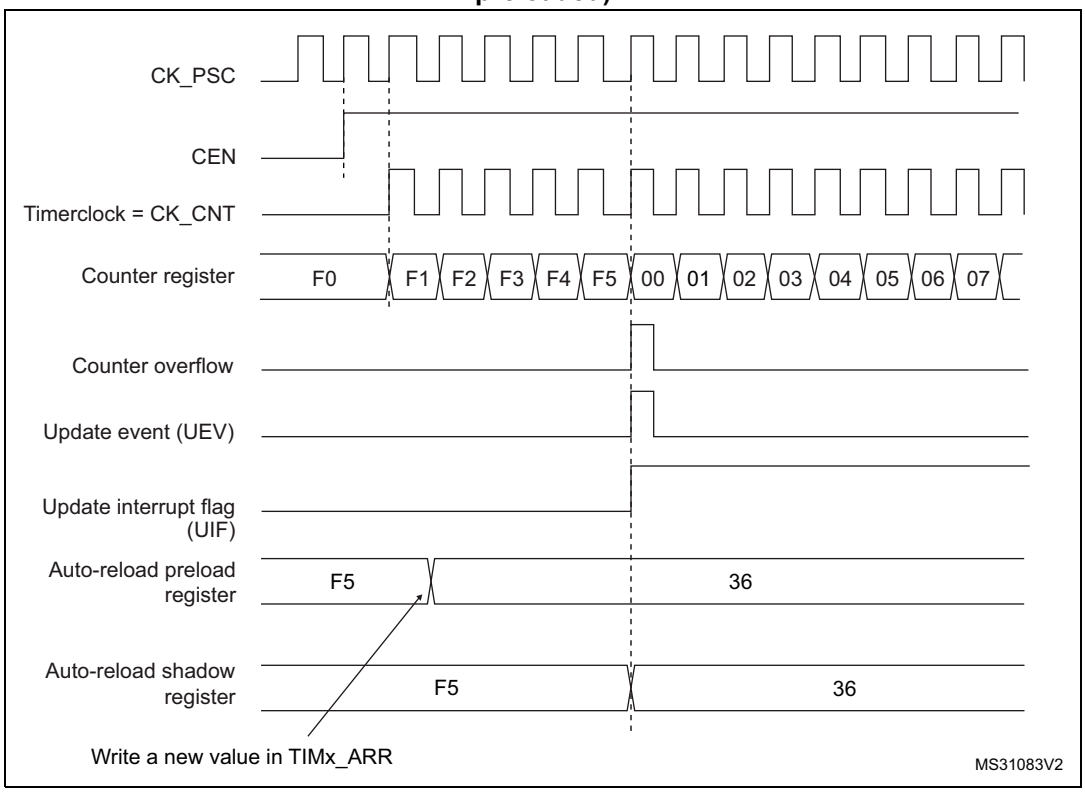

33.3.3 UIF bit remapping

The IUFREMAP bit in the TIMx_CR1 register forces a continuous copy of the Update Interrupt Flag UIF into the timer counter register's bit 31 (TIMxCNT[31]). This allows to atomically read both the counter value and a potential roll-over condition signaled by the UIFCPY flag. In particular cases, it can ease the calculations by avoiding race conditions caused for instance by a processing shared between a background task (counter reading) and an interrupt (Update Interrupt).

There is no latency between the assertions of the UIF and UIFCPY flags.

33.3.4 Clock source

The counter clock is provided by the Internal clock (CK_INT) source.

The CEN (in the TIMx_CR1 register) and UG bits (in the TIMx_EGR register) are actual control bits and can be changed only by software (except for UG that remains cleared automatically). As soon as the CEN bit is written to 1, the prescaler is clocked by the internal clock CK_INT.

Figure 375 shows the behavior of the control circuit and the upcounter in normal mode, without prescaler.

Figure 375. Control circuit in normal mode, internal clock divided by 1

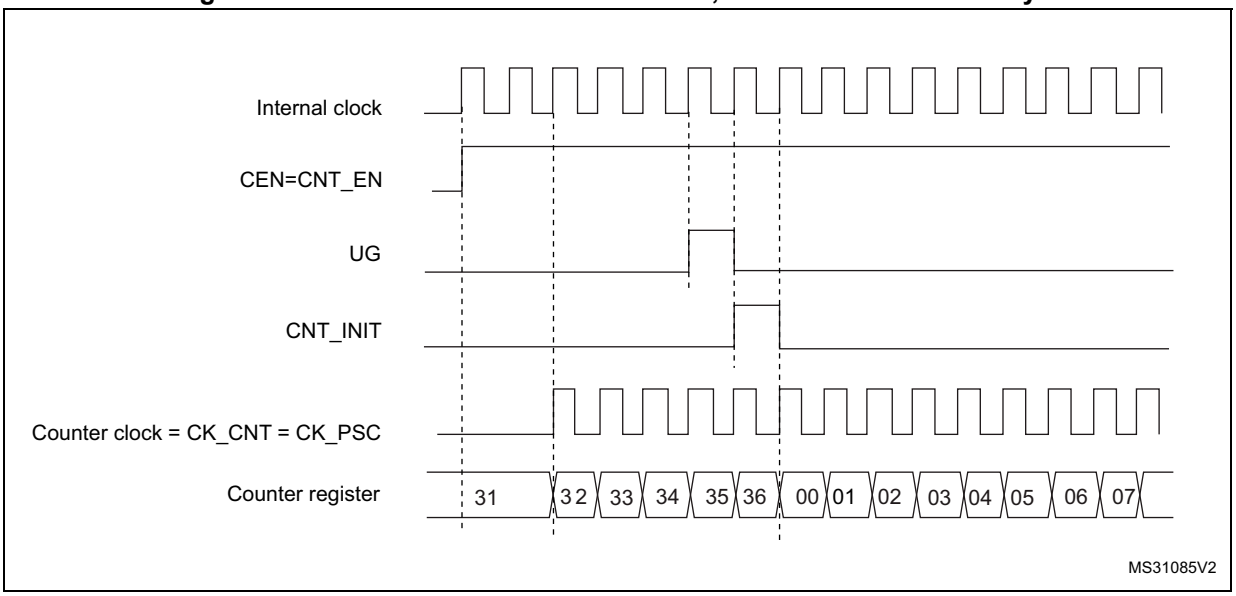

33.3.5 Debug mode

When the microcontroller enters the debug mode (Cortex®-M4 core - halted), the TIMx counter either continues to work normally or stops, depending on the DBG_TIMx_STOP configuration bit in the DBG module. For more details, refer to *Section 48.16.2: Debug support for timers, RTC, watchdog, bxCAN and I²C*.

33.4 TIM6/TIM7 registers

Refer to *Section 1.2 on page 69* for a list of abbreviations used in register descriptions.

The peripheral registers can be accessed by half-words (16-bit) or words (32-bit).

33.4.1 TIMx control register 1 (TIMx_CR1)(x = 6 to 7)

Address offset: 0x00

Reset value: 0x0000

15	14	13	12	11	10	9	8	7	6	5	4	3	2	1	0
Res.	Res.	Res.	Res.	UIFREMAP	Res.	Res.	Res.	ARPE	Res.	Res.	Res.	OPM	URS	UDIS	CEN
				rw				rw				rw	rw	rw	rw

Bits 15:12 Reserved, must be kept at reset value.

Bit 11 **UIFREMAP**: UIF status bit remapping
0: No remapping. UIF status bit is not copied to TIMx_CNT register bit 31.
1: Remapping enabled. UIF status bit is copied to TIMx_CNT register bit 31.

Bits 10:8 Reserved, must be kept at reset value.

Bit 7 **ARPE**: Auto-reload preload enable

0: TIMx_ARR register is not buffered.
1: TIMx_ARR register is buffered.

Bits 6:4 Reserved, must be kept at reset value.

Bit 3 **OPM**: One-pulse mode

0: Counter is not stopped at update event
1: Counter stops counting at the next update event (clearing the CEN bit).

Bit 2 **URS**: Update request source

This bit is set and cleared by software to select the UEV event sources.

0: Any of the following events generates an update interrupt or DMA request if enabled. These events can be:

- Counter overflow/underflow
- Setting the UG bit
- Update generation through the slave mode controller

1: Only counter overflow/underflow generates an update interrupt or DMA request if enabled.

Bit 1 **UDIS**: Update disable

This bit is set and cleared by software to enable/disable UEV event generation.

0: UEV enabled. The Update (UEV) event is generated by one of the following events:

- Counter overflow/underflow
- Setting the UG bit
- Update generation through the slave mode controller

Buffered registers are then loaded with their preload values.

1: UEV disabled. The Update event is not generated, shadow registers keep their value (ARR, PSC). However the counter and the prescaler are reinitialized if the UG bit is set or if a hardware reset is received from the slave mode controller.

Bit 0 **CEN**: Counter enable

0: Counter disabled
1: Counter enabled

Note: Gated mode can work only if the CEN bit has been previously set by software. However trigger mode can set the CEN bit automatically by hardware.

CEN is cleared automatically in one-pulse mode, when an update event occurs.

33.4.2 TIMx control register 2 (TIMx_CR2)(x = 6 to 7)

Address offset: 0x04

Reset value: 0x0000

15	14	13	12	11	10	9	8	7	6	5	4	3	2	1	0
Res.	Res.	Res.	Res.	Res.	Res.	Res.	Res.	Res.	MMS[2:0]			Res.	Res.	Res.	Res.
									rw	rw	rw				

Bits 15:7 Reserved, must be kept at reset value.

Bits 6:4 **MMS[2:0]**: Master mode selection

These bits are used to select the information to be sent in master mode to slave timers for synchronization (TRGO). The combination is as follows:

000: **Reset** - the UG bit from the TIMx_EGR register is used as a trigger output (TRGO). If reset is generated by the trigger input (slave mode controller configured in reset mode) then the signal on TRGO is delayed compared to the actual reset.

001: **Enable** - the Counter enable signal, CNT_EN, is used as a trigger output (TRGO). It is useful to start several timers at the same time or to control a window in which a slave timer is enabled. The Counter Enable signal is generated by a logic OR between CEN control bit and the trigger input when configured in gated mode.

When the Counter Enable signal is controlled by the trigger input, there is a delay on TRGO, except if the master/slave mode is selected (see the MSM bit description in the TIMx_SMCR register).

010: **Update** - The update event is selected as a trigger output (TRGO). For instance a master timer can then be used as a prescaler for a slave timer.

Note: The clock of the slave timer or ADC must be enabled prior to receive events from the master timer, and must not be changed on-the-fly while triggers are received from the master timer.

Bits 3:0 Reserved, must be kept at reset value.

33.4.3 TIMx DMA/Interrupt enable register (TIMx_DIER)(x = 6 to 7)

Address offset: 0x0C

Reset value: 0x0000

15	14	13	12	11	10	9	8	7	6	5	4	3	2	1	0
Res.	Res.	Res.	Res.	Res.	Res.	Res.	UDE	Res.	Res.	Res.	Res.	Res.	Res.	Res.	UIE
							rw								rw

Bits 15:9 Reserved, must be kept at reset value.

Bit 8 **UDE**: Update DMA request enable

0: Update DMA request disabled.
1: Update DMA request enabled.

Bits 7:1 Reserved, must be kept at reset value.

Bit 0 **UIE**: Update interrupt enable

0: Update interrupt disabled.
1: Update interrupt enabled.

33.4.4 TIMx status register (TIMx_SR)(x = 6 to 7)

Address offset: 0x10

Reset value: 0x0000

15	14	13	12	11	10	9	8	7	6	5	4	3	2	1	0
Res.	Res.	Res.	Res.	Res.	Res.	Res.	Res.	Res.	Res.	Res.	Res.	Res.	Res.	Res.	UIF
															rc_w0

Bits 15:1 Reserved, must be kept at reset value.

Bit 0 **UIF**: Update interrupt flag

This bit is set by hardware on an update event. It is cleared by software.

0: No update occurred.

1: Update interrupt pending. This bit is set by hardware when the registers are updated:

– At overflow or underflow regarding the repetition counter value and if UDIS = 0 in the TIMx_CR1 register.

– When CNT is reinitialized by software using the UG bit in the TIMx_EGR register, if URS = 0 and UDIS = 0 in the TIMx_CR1 register.

33.4.5 TIMx event generation register (TIMx_EGR)(x = 6 to 7)

Address offset: 0x14

Reset value: 0x0000

15	14	13	12	11	10	9	8	7	6	5	4	3	2	1	0
Res.	Res.	Res.	Res.	Res.	Res.	Res.	Res.	Res.	Res.	Res.	Res.	Res.	Res.	Res.	UG
															w

Bits 15:1 Reserved, must be kept at reset value.

Bit 0 **UG**: Update generation

This bit can be set by software, it is automatically cleared by hardware.

0: No action.

1: Re-initializes the timer counter and generates an update of the registers. Note that the prescaler counter is cleared too (but the prescaler ratio is not affected).

33.4.6 TIMx counter (TIMx_CNT)(x = 6 to 7)

Address offset: 0x24

Reset value: 0x0000 0000

31	30	29	28	27	26	25	24	23	22	21	20	19	18	17	16
UIF CPY	Res.	Res.	Res.	Res.	Res.	Res.	Res.	Res.	Res.	Res.	Res.	Res.	Res.	Res.	Res.
r															

15	14	13	12	11	10	9	8	7	6	5	4	3	2	1	0
CNT[15:0]															
rw	rw	rw	rw	rw	rw	rw	rw	rw	rw	rw	rw	rw	rw	rw	rw

Bit 31 **UIFCPY**: UIF Copy
This bit is a read-only copy of the UIF bit of the TIMx_ISR register. If the UIFREMAP bit in TIMx_CR1 is reset, bit 31 is reserved and read as 0.

Bits 30:16 Reserved, must be kept at reset value.

Bits 15:0 **CNT[15:0]**: Counter value

33.4.7 TIMx prescaler (TIMx_PSC)(x = 6 to 7)

Address offset: 0x28

Reset value: 0x0000

15	14	13	12	11	10	9	8	7	6	5	4	3	2	1	0
PSC[15:0]															
rw	rw	rw	rw	rw	rw	rw	rw	rw	rw	rw	rw	rw	rw	rw	rw

Bits 15:0 **PSC[15:0]**: Prescaler value
The counter clock frequency CK_CNT is equal to f_{CK_PSC} / (PSC[15:0] + 1).
PSC contains the value to be loaded into the active prescaler register at each update event.
(including when the counter is cleared through UG bit of TIMx_EGR register or through trigger controller when configured in “reset mode”).

33.4.8 TIMx auto-reload register (TIMx_ARR)(x = 6 to 7)

Address offset: 0x2C

Reset value: 0xFFFF

15	14	13	12	11	10	9	8	7	6	5	4	3	2	1	0
ARR[15:0]															
rw	rw	rw	rw	rw	rw	rw	rw	rw	rw	rw	rw	rw	rw	rw	rw

Bits 15:0 **ARR[15:0]**: Prescaler value
ARR is the value to be loaded into the actual auto-reload register.
Refer to *Section 33.3.1: Time-base unit on page 1173* for more details about ARR update and behavior.
The counter is blocked while the auto-reload value is null.

33.4.9 TIMx register map

TIMx registers are mapped as 16-bit addressable registers as described in the table below:

Table 210. TIMx register map and reset values

Offset	Register name	31	30	29	28	27	26	25	24	23	22	21	20	19	18	17	16	15	14	13	12	11	10	9	8	7	6	5	4	3	2	1	0
0x00	TIMx_CR1	Res.	Res.	Res.	Res.	Res.	Res.	Res.	Res.	Res.	Res.	Res.	Res.	Res.	Res.	Res.	Res.	Res.	Res.	Res.	Res.	UIFREMA	Res.	Res.	Res.	ARPE	Res.	Res.	Res.	OPM	URS	UDIS	CEN
	Reset value																					0				0				0	0	0	0
0x04	TIMx_CR2	Res.	Res.	Res.	Res.	Res.	Res.	Res.	Res.	Res.	Res.	Res.	Res.	Res.	Res.	Res.	Res.	Res.	Res.	Res.	Res.	Res.	Res.	Res.	Res.	Res.	MMS [2:0]			Res.	Res.	Res.	Res.
	Reset value																										0	0	0				
0x08	Reserved																																
0x0C	TIMx_DIER	Res.	Res.	Res.	Res.	Res.	Res.	Res.	Res.	Res.	Res.	Res.	Res.	Res.	Res.	Res.	Res.	Res.	Res.	Res.	Res.	Res.	Res.	Res.	UDE	Res.	Res.	Res.	Res.	Res.	Res.	Res.	UIE
	Reset value																								0								0
0x10	TIMx_SR	Res.	Res.	Res.	Res.	Res.	Res.	Res.	Res.	Res.	Res.	Res.	Res.	Res.	Res.	Res.	Res.	Res.	Res.	Res.	Res.	Res.	Res.	Res.	Res.	Res.	Res.	Res.	Res.	Res.	Res.	Res.	UIF
	Reset value																																0
0x14	TIMx_EGR	Res.	Res.	Res.	Res.	Res.	Res.	Res.	Res.	Res.	Res.	Res.	Res.	Res.	Res.	Res.	Res.	Res.	Res.	Res.	Res.	Res.	Res.	Res.	Res.	Res.	Res.	Res.	Res.	Res.	Res.	Res.	UG
	Reset value																																0
0x18-0x20	Reserved																																
0x24	TIMx_CNT	UIFCPY or Res.	Res.	Res.	Res.	Res.	Res.	Res.	Res.	Res.	Res.	Res.	Res.	Res.	Res.	Res.	Res.	CNT[15:0]															
	Reset value	0																0	0	0	0	0	0	0	0	0	0	0	0	0	0	0	0
0x28	TIMx_PSC	Res.	Res.	Res.	Res.	Res.	Res.	Res.	Res.	Res.	Res.	Res.	Res.	Res.	Res.	Res.	Res.	PSC[15:0]															
	Reset value																	0	0	0	0	0	0	0	0	0	0	0	0	0	0	0	0
0x2C	TIMx_ARR	Res.	Res.	Res.	Res.	Res.	Res.	Res.	Res.	Res.	Res.	Res.	Res.	Res.	Res.	Res.	Res.	ARR[15:0]															
	Reset value																	1	1	1	1	1	1	1	1	1	1	1	1	1	1	1	1

Refer to *Section 2.2 on page 75* for the register boundary addresses.

34 Low-power timer (LPTIM)

34.1 Introduction

The LPTIM is a 16-bit timer that benefits from the ultimate developments in power consumption reduction. Thanks to its diversity of clock sources, the LPTIM is able to keep running in all power modes except for Standby mode. Given its capability to run even with no internal clock source, the LPTIM can be used as a “Pulse Counter” which can be useful in some applications. Also, the LPTIM capability to wake up the system from low-power modes, makes it suitable to realize “Timeout functions” with extremely low power consumption.

The LPTIM introduces a flexible clock scheme that provides the needed functionalities and performance, while minimizing the power consumption.

34.2 LPTIM main features

- 16 bit upcounter
- 3-bit prescaler with 8 possible dividing factors (1,2,4,8,16,32,64,128)
- Selectable clock
  - Internal clock sources: LSE, LSI, HSI16 or APB clock
  - External clock source over LPTIM input (working with no LP oscillator running, used by Pulse Counter application)
- 16 bit ARR autoreload register
- 16 bit compare register
- Continuous/One-shot mode
- Selectable software/hardware input trigger
- Programmable Digital Glitch filter
- Configurable output: Pulse, PWM
- Configurable I/O polarity
- Encoder mode

34.3 LPTIM implementation

Table 211 describes LPTIM implementation on STM32L47x/L48x/L49x/L4Ax devices: the full set of features is implemented in LPTIM1. LPTIM2 supports a smaller set of features, but is otherwise identical to LPTIM1.

Table 211. STM32L47x/L48x/L49x/L4Ax LPTIM features

LPTIM modes/features(1)	LPTIM1	LPTIM2
Encoder mode	X	-

1. X = supported.

34.4 LPTIM functional description

34.4.1 LPTIM block diagram

Figure 376. Low-power timer block diagram

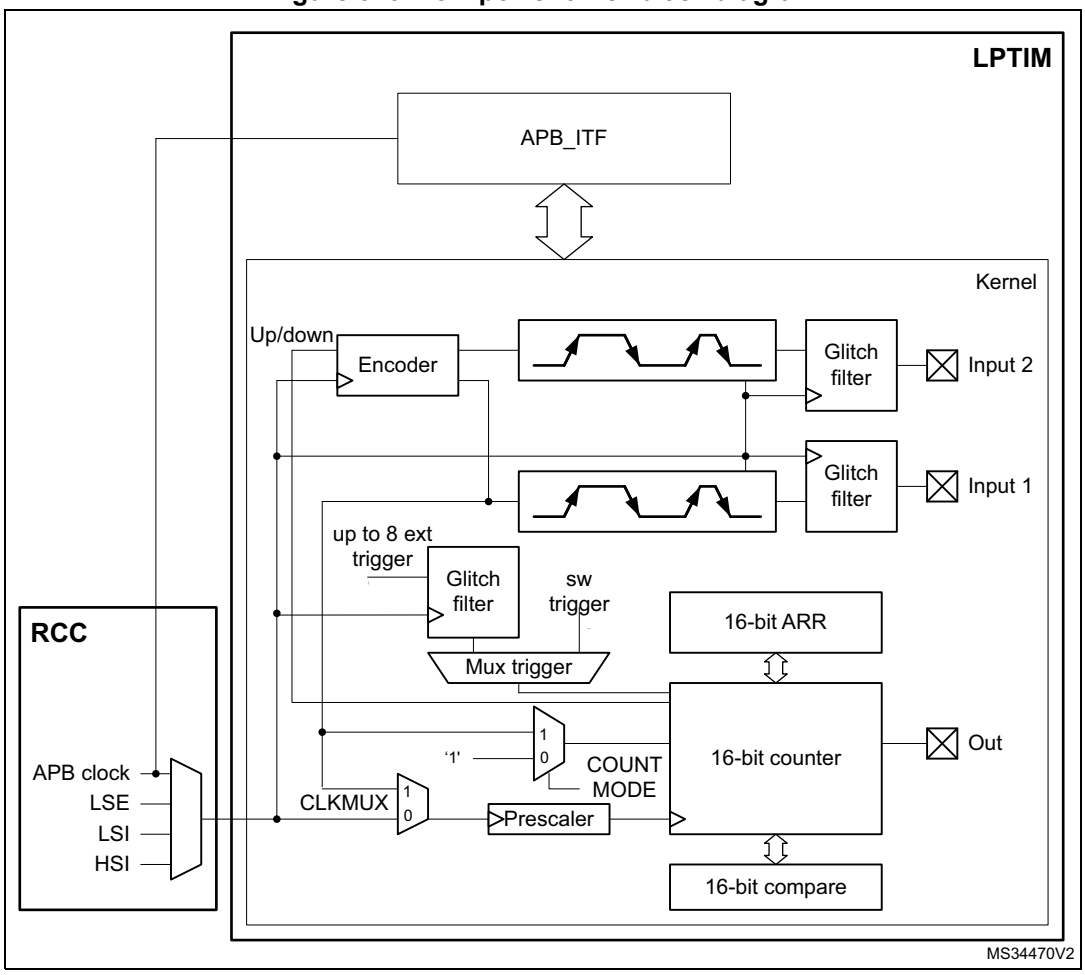

34.4.2 LPTIM trigger mapping

The LPTIM external trigger connections are detailed hereafter:

Table 212. LPTIM1 external trigger connection

TRIGSEL	External trigger
lptim_ext_trig0	GPIO
lptim_ext_trig1	RTC alarm A
lptim_ext_trig2	RTC alarm B
lptim_ext_trig3	RTC_TAMP1 input detection
lptim_ext_trig4	RTC_TAMP2 input detection
lptim_ext_trig5	RTC_TAMP3 input detection
lptim_ext_trig6	COMP1_OUT
lptim_ext_trig7	COMP2_OUT

Table 213. LPTIM2 external trigger connection

TRIGSEL	External trigger
lptim_ext_trig0	GPIO
lptim_ext_trig1	RTC alarm A
lptim_ext_trig2	RTC alarm B
lptim_ext_trig3	RTC_TAMP1 input detection
lptim_ext_trig4	RTC_TAMP2 input detection
lptim_ext_trig5	RTC_TAMP3 input detection
lptim_ext_trig6	COMP1_OUT
lptim_ext_trig7	COMP2_OUT

34.4.3 LPTIM reset and clocks

The LPTIM can be clocked using several clock sources. It can be clocked using an internal clock signal which can be chosen among APB, LSI, LSE or HSI16 sources through the Reset and Clock controller (RCC). Also, the LPTIM can be clocked using an external clock signal injected on its external Input1. When clocked with an external clock source, the LPTIM may run in one of these two possible configurations:

- The first configuration is when the LPTIM is clocked by an external signal but in the same time an internal clock signal is provided to the LPTIM either from APB or any other embedded oscillator including LSE, LSI and HSI16.
- The second configuration is when the LPTIM is solely clocked by an external clock source through its external Input1. This configuration is the one used to realize Timeout function or Pulse counter function when all the embedded oscillators are turned off after entering a low-power mode.

Programming the CKSEL and COUNTMODE bits allows controlling whether the LPTIM will use an external clock source or an internal one.

When configured to use an external clock source, the CKPOL bits are used to select the external clock signal active edge. If both edges are configured to be active ones, an internal clock signal should also be provided (first configuration). In this case, the internal clock signal frequency should be at least four times higher than the external clock signal frequency.

34.4.4 Glitch filter

The LPTIM inputs, either external (mapped to GPIOs) or internal (mapped on the chip-level to other embedded peripherals, such as embedded comparators), are protected with digital filters that prevent any glitches and noise perturbations to propagate inside the LPTIM. This is in order to prevent spurious counts or triggers.

Before activating the digital filters, an internal clock source should first be provided to the LPTIM. This is necessary to guarantee the proper operation of the filters.

The digital filters are divided into two groups:

- The first group of digital filters protects the LPTIM external inputs. The digital filters sensitivity is controlled by the CKFLT bits
- The second group of digital filters protects the LPTIM internal trigger inputs. The digital filters sensitivity is controlled by the TRGFLT bits.

Note: The digital filters sensitivity is controlled by groups. It is not possible to configure each digital filter sensitivity separately inside the same group.

The filter sensitivity acts on the number of consecutive equal samples that should be detected on one of the LPTIM inputs to consider a signal level change as a valid transition. *Figure 377* shows an example of glitch filter behavior in case of a 2 consecutive samples programmed.

Figure 377. Glitch filter timing diagram

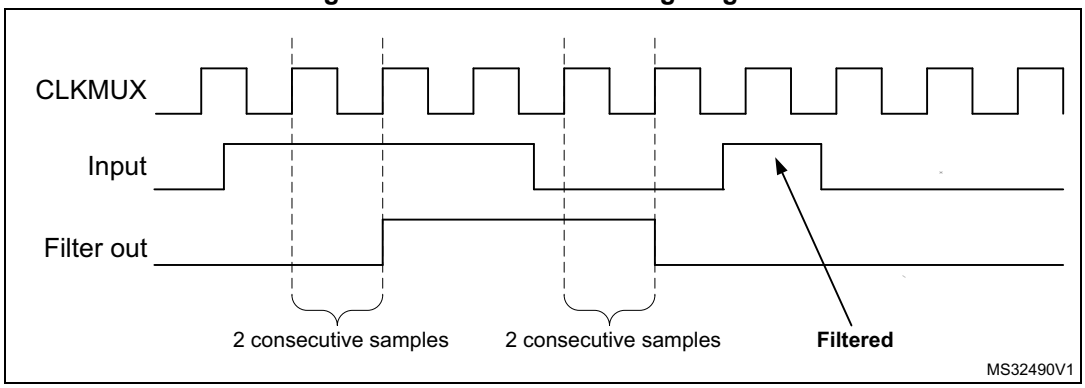

Note: In case no internal clock signal is provided, the digital filter must be deactivated by setting the CKFLT and TRGFLT bits to ‘0’. In that case, an external analog filter may be used to protect the LPTIM external inputs against glitches.

34.4.5 Prescaler

The LPTIM 16-bit counter is preceded by a configurable power-of-2 prescaler. The prescaler division ratio is controlled by the PRESC[2:0] 3-bit field. The table below lists all the possible division ratios:

Table 214. Prescaler division ratios

programming	dividing factor
000	/1
001	/2
010	/4
011	/8
100	/16
101	/32
110	/64
111	/128

34.4.6 Trigger multiplexer

The LPTIM counter may be started either by software or after the detection of an active edge on one of the 8 trigger inputs.

TRIGEN[1:0] is used to determine the LPTIM trigger source:

- When TRIGEN[1:0] equals ‘00’, The LPTIM counter is started as soon as one of the CNTSTRT or the SNGSTRT bits is set by software. The three remaining possible values for the TRIGEN[1:0] are used to configure the active edge used by the trigger inputs. The LPTIM counter starts as soon as an active edge is detected.
- When TRIGEN[1:0] is different than ‘00’, TRIGSEL[2:0] is used to select which of the 8 trigger inputs is used to start the counter.

The external triggers are considered asynchronous signals for the LPTIM. So after a trigger detection, a two-counter-clock period latency is needed before the timer starts running due to the synchronization.

If a new trigger event occurs when the timer is already started it will be ignored (unless timeout function is enabled).

Note: The timer must be enabled before setting the SNGSTRT/CNTSTRT bits. Any write on these bits when the timer is disabled will be discarded by hardware.

34.4.7 Operating mode

The LPTIM features two operating modes:

- The Continuous mode: the timer is free running, the timer is started from a trigger event and never stops until the timer is disabled
- One-shot mode: the timer is started from a trigger event and stops when reaching the ARR value.

One-shot mode

To enable the one-shot counting, the SNGSTRT bit must be set.

A new trigger event will re-start the timer. Any trigger event occurring after the counter starts and before the counter reaches ARR will be discarded.

In case an external trigger is selected, each external trigger event arriving after the SNGSTRT bit is set, and after the counter register has stopped (contains zero value), will start the counter for a new one-shot counting cycle as shown in *Figure 378*.

Figure 378. LPTIM output waveform, single counting mode configuration

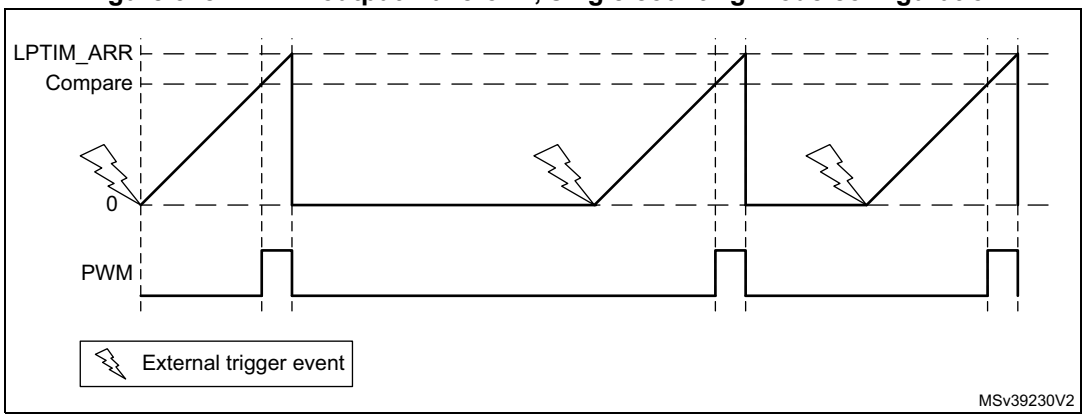

- Set-once mode activated:

It should be noted that when the WAVE bit-field in the LPTIM_CFGR register is set, the Set-once mode is activated. In this case, the counter is only started once following the first trigger, and any subsequent trigger event is discarded as shown in *Figure 379*.

Figure 379. LPTIM output waveform, Single counting mode configuration and Set-once mode activated (WAVE bit is set)

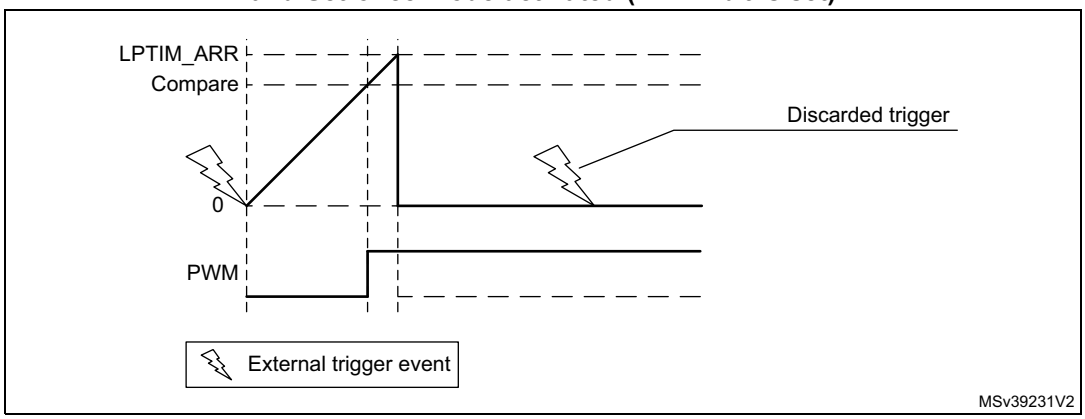

In case of software start (TRIGEN[1:0] = ‘00’), the SNGSTRT setting will start the counter for one-shot counting.

Continous mode

To enable the continuous counting, the CNTSTRT bit must be set.

In case an external trigger is selected, an external trigger event arriving after CNTSTRT is set will start the counter for continuous counting. Any subsequent external trigger event will be discarded as shown in *Figure 380*.

In case of software start (TRIGEN[1:0] = ‘00’), setting CNTSTRT will start the counter for continuous counting.

Figure 380. LPTIM output waveform, Continuous counting mode configuration

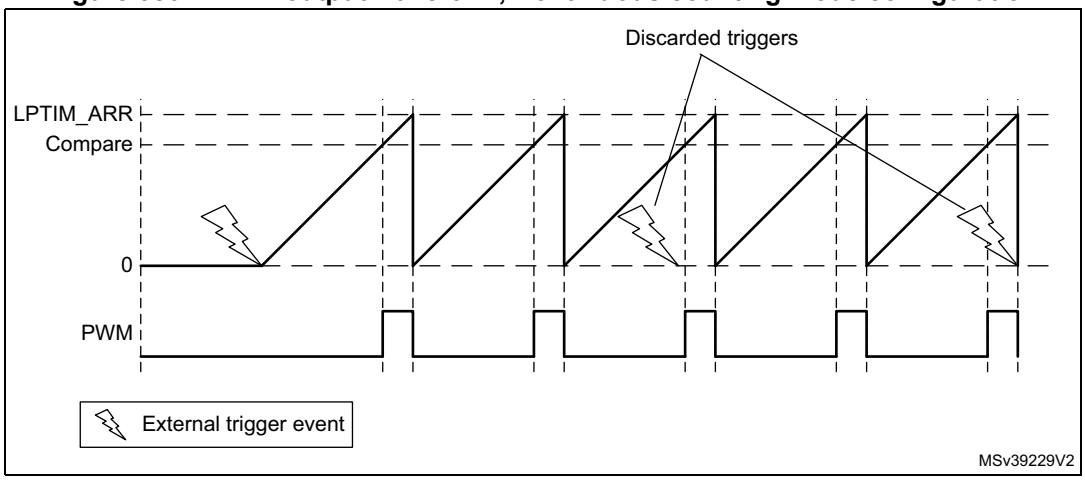

SNGSTRT and CNTSTRT bits can only be set when the timer is enabled (The ENABLE bit is set to ‘1’). It is possible to change “on the fly” from One-shot mode to Continuous mode.

If the Continuous mode was previously selected, setting SNGSTRT will switch the LPTIM to the One-shot mode. The counter (if active) will stop as soon as it reaches ARR.

If the One-shot mode was previously selected, setting CNTSTRT will switch the LPTIM to the Continuous mode. The counter (if active) will restart as soon as it reaches ARR.

34.4.8 Timeout function

The detection of an active edge on one selected trigger input can be used to reset the LPTIM counter. This feature is controlled through the TIMOUT bit.

The first trigger event will start the timer, any successive trigger event will reset the counter and the timer will restart.

A low-power timeout function can be realized. The timeout value corresponds to the compare value; if no trigger occurs within the expected time frame, the MCU is waked-up by the compare match event.

34.4.9 Waveform generation

Two 16-bit registers, the LPTIM_ARR (autoreload register) and LPTIM_CMP (compare register), are used to generate several different waveforms on LPTIM output

The timer can generate the following waveforms:

- The PWM mode: the LPTIM output is set as soon as the counter value in LPTIM_CNT exceeds the compare value in LPTIM_CMP. The LPTIM output is reset as soon as a match occurs between the LPTIM_ARR and the LPTIM_CNT registers.
- The One-pulse mode: the output waveform is similar to the one of the PWM mode for the first pulse, then the output is permanently reset
- The Set-once mode: the output waveform is similar to the One-pulse mode except that the output is kept to the last signal level (depends on the output configured polarity).

The above described modes require that the LPTIM_ARR register value be strictly greater than the LPTIM_CMP register value.

The LPTIM output waveform can be configured through the WAVE bit as follow:

- Resetting the WAVE bit to ‘0’ forces the LPTIM to generate either a PWM waveform or a One pulse waveform depending on which bit is set: CNTSTRT or SNGSTRT.
- Setting the WAVE bit to ‘1’ forces the LPTIM to generate a Set-once mode waveform.

The WAVPOL bit controls the LPTIM output polarity. The change takes effect immediately, so the output default value will change immediately after the polarity is re-configured, even before the timer is enabled.

Signals with frequencies up to the LPTIM clock frequency divided by 2 can be generated. *Figure 381* below shows the three possible waveforms that can be generated on the LPTIM output. Also, it shows the effect of the polarity change using the WAVPOL bit.

Figure 381. Waveform generation

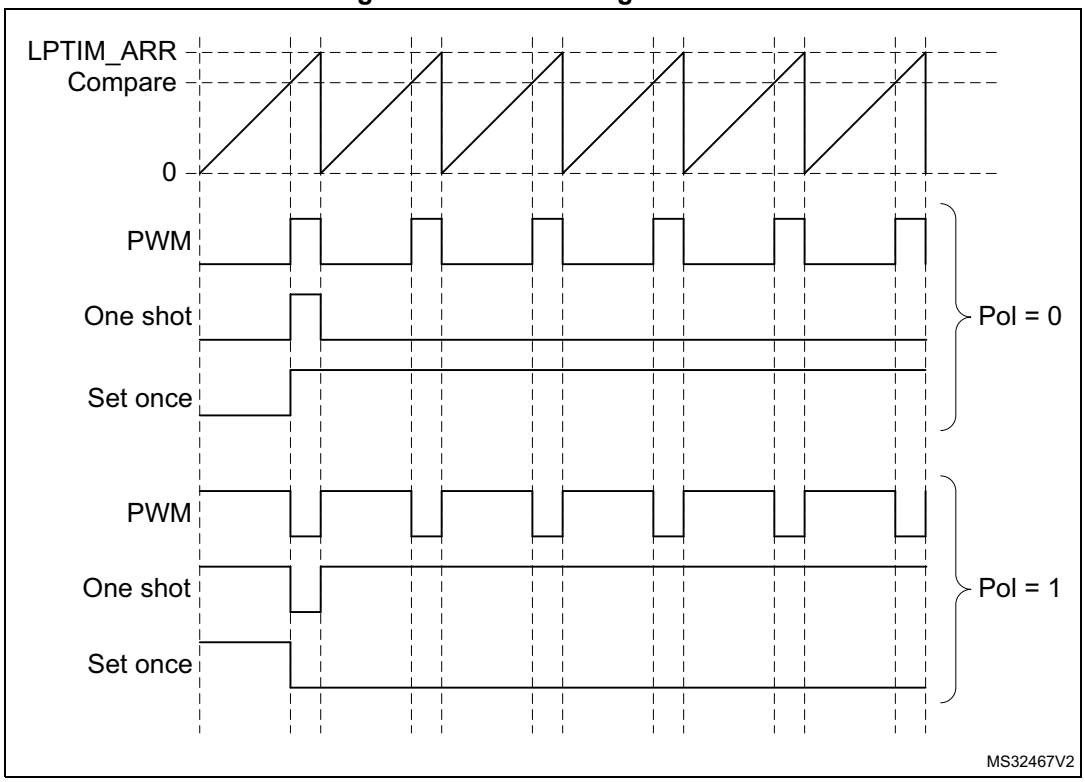

34.4.10 Register update

The LPTIM_ARR register and LPTIM_CMP register are updated immediately after the APB bus write operation, or at the end of the current period if the timer is already started.

The PRELOAD bit controls how the LPTIM_ARR and the LPTIM_CMP registers are updated:

- When the PRELOAD bit is reset to ‘0’, the LPTIM_ARR and the LPTIM_CMP registers are immediately updated after any write access.
- When the PRELOAD bit is set to ‘1’, the LPTIM_ARR and the LPTIM_CMP registers are updated at the end of the current period, if the timer has been already started.

The LPTIM APB interface and the LPTIM kernel logic use different clocks, so there is some latency between the APB write and the moment when these values are available to the counter comparator. Within this latency period, any additional write into these registers must be avoided.

The ARROK flag and the CMPOK flag in the LPTIM_ISR register indicate when the write operation is completed to respectively the LPTIM_ARR register and the LPTIM_CMP register.

After a write to the LPTIM_ARR register or the LPTIM_CMP register, a new write operation to the same register can only be performed when the previous write operation is completed. Any successive write before respectively the ARROK flag or the CMPOK flag be set, will lead to unpredictable results.

34.4.11 Counter mode

The LPTIM counter can be used to count external events on the LPTIM Input1 or it can be used to count internal clock cycles. The CKSEL and COUNTMODE bits control which source will be used for updating the counter.

In case the LPTIM is configured to count external events on Input1, the counter can be updated following a rising edge, falling edge or both edges depending on the value written to the CKPOL[1:0] bits.

The count modes below can be selected, depending on CKSEL and COUNTMODE values:

- CKSEL = 0: the LPTIM is clocked by an internal clock source
  - COUNTMODE = 0

    The LPTIM is configured to be clocked by an internal clock source and the LPTIM counter is configured to be updated following each internal clock pulse.
  - COUNTMODE = 1

    The LPTIM external Input1 is sampled with the internal clock provided to the LPTIM.

    Consequently, in order not to miss any event, the frequency of the changes on the external Input1 signal should never exceed the frequency of the internal clock provided to the LPTIM. Also, the internal clock provided to the LPTIM must not be prescaled (PRESC[2:0] = 000).
- CKSEL = 1: the LPTIM is clocked by an external clock source

  COUNTMODE value is don’t care.

  In this configuration, the LPTIM has no need for an internal clock source (except if the glitch filters are enabled). The signal injected on the LPTIM external Input1 is used as system clock for the LPTIM. This configuration is suitable for operation modes where no embedded oscillator is enabled.

  For this configuration, the LPTIM counter can be updated either on rising edges or falling edges of the input1 clock signal but not on both rising and falling edges.

  Since the signal injected on the LPTIM external Input1 is also used to clock the LPTIM kernel logic, there is some initial latency (after the LPTIM is enabled) before the counter is incremented. More precisely, the first five active edges on the LPTIM external Input1 (after LPTIM is enable) are lost.

34.4.12 Timer enable

The ENABLE bit located in the LPTIM_CR register is used to enable/disable the LPTIM kernel logic. After setting the ENABLE bit, a delay of two counter clock is needed before the LPTIM is actually enabled.

The LPTIM_CFGR and LPTIM_IER registers must be modified only when the LPTIM is disabled.

34.4.13 Encoder mode

This mode allows handling signals from quadrature encoders used to detect angular position of rotary elements. Encoder interface mode acts simply as an external clock with direction selection. This means that the counter just counts continuously between 0 and the auto-reload value programmed into the LPTIM_ARR register (0 up to ARR or ARR down to 0 depending on the direction). Therefore LPTIM_ARR must be configured before starting. From the two external input signals, Input1 and Input2, a clock signal is generated to clock the LPTIM counter. The phase between those two signals determines the counting direction.

The Encoder mode is only available when the LPTIM is clocked by an internal clock source. The signals frequency on both Input1 and Input2 inputs must not exceed the LPTIM internal clock frequency divided by 4. This is mandatory in order to guarantee a proper operation of the LPTIM.

Direction change is signalized by the two Down and Up flags in the LPTIM_ISR register. Also, an interrupt can be generated for both direction change events if enabled through the DOWNIE bit.

To activate the Encoder mode the ENC bit has to be set to ‘1’. The LPTIM must first be configured in Continuous mode.

When Encoder mode is active, the LPTIM counter is modified automatically following the speed and the direction of the incremental encoder. Therefore, its content always represents the encoder’s position. The count direction, signaled by the Up and Down flags, correspond to the rotation direction of the encoder rotor.

According to the edge sensitivity configured using the CKPOL[1:0] bits, different counting scenarios are possible. The following table summarizes the possible combinations, assuming that Input1 and Input2 do not switch at the same time.

Table 215. Encoder counting scenarios

Active edge	Level on opposite signal (Input1 for Input2, Input2 for Input1)	Input1 signal		Input2 signal	
		Rising	Falling	Rising	Falling
Rising Edge	High	Down	No count	Up	No count
	Low	Up	No count	Down	No count
Falling Edge	High	No count	Up	No count	Down
	Low	No count	Down	No count	Up
Both Edges	High	Down	Up	Up	Down
	Low	Up	Down	Down	Up

The following figure shows a counting sequence for Encoder mode where both-edge sensitivity is configured.

Caution: In this mode the LPTIM must be clocked by an internal clock source, so the CKSEL bit must be maintained to its reset value which is equal to ‘0’. Also, the prescaler division ratio must be equal to its reset value which is 1 (PRESC[2:0] bits must be ‘000’).

Figure 382. Encoder mode counting sequence

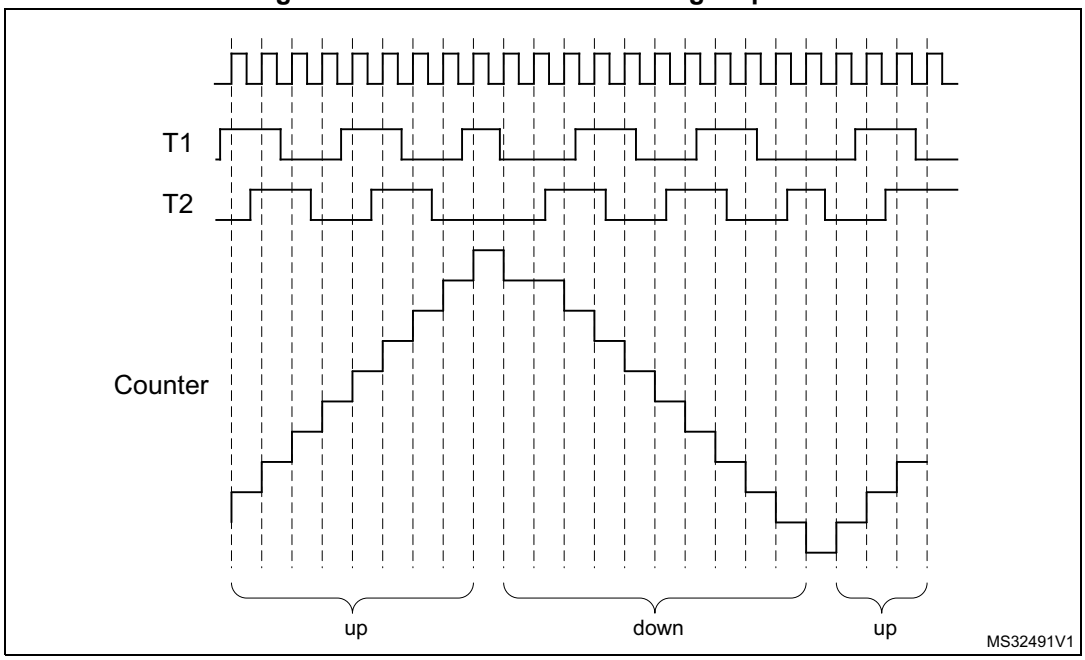

34.4.14 Debug mode

When the microcontroller enters debug mode (core halted), the LPTIM counter either continues to work normally or stops, depending on the DBG_LPTIM_STOP configuration bit in the DBG module.

34.5 LPTIM low-power modes

Table 216. Effect of low-power modes on the LPTIM

Mode	Description
Sleep	No effect. LPTIM interrupts cause the device to exit Sleep mode.
Low-power run	No effect.
Low-power sleep	No effect. LPTIM interrupts cause the device to exit the Low-power sleep mode.
Stop 0 / Stop 1	No effect when LPTIM is clocked by LSE or LSI. LPTIM interrupts cause the device to exit Stop 0 and Stop 1.
Stop 2	No effect on LPTIM1 when LPTIM1 is clocked by LSE or LSI. LPTIM1 interrupts cause the device to exit Stop 2. LPTIM2 registers content is kept but LPTIM2 must be disabled before entering Stop 2.
Standby	The LPTIM peripheral is powered down and must be reinitialized after exiting Standby or Shutdown mode.
Shutdown	

34.6 LPTIM interrupts

The following events generate an interrupt/wake-up event, if they are enabled through the LPTIM_IER register:

- Compare match
- Auto-reload match (whatever the direction if encoder mode)
- External trigger event
- Autoreload register write completed
- Compare register write completed
- Direction change (encoder mode), programmable (up / down / both).

Note: If any bit in the LPTIM_IER register (Interrupt Enable Register) is set after that its corresponding flag in the LPTIM_ISR register (Status Register) is set, the interrupt is not asserted.

Table 217. Interrupt events

Interrupt event	Description
Compare match	Interrupt flag is raised when the content of the Counter register (LPTIM_CNT) matches the content of the compare register (LPTIM_CMP).
Auto-reload match	Interrupt flag is raised when the content of the Counter register (LPTIM_CNT) matches the content of the Auto-reload register (LPTIM_ARR).
External trigger event	Interrupt flag is raised when an external trigger event is detected
Auto-reload register update OK	Interrupt flag is raised when the write operation to the LPTIM_ARR register is complete.
Compare register update OK	Interrupt flag is raised when the write operation to the LPTIM_CMP register is complete.
Direction change	Used in Encoder mode. Two interrupt flags are embedded to signal direction change: – UP flag signals up-counting direction change – DOWN flag signals down-counting direction change.

34.7 LPTIM registers

The peripheral registers can only be accessed by words (32-bit).

34.7.1 LPTIM interrupt and status register (LPTIM_ISR)

Address offset: 0x000

Reset value: 0x0000 0000

31	30	29	28	27	26	25	24	23	22	21	20	19	18	17	16
Res.	Res.	Res.	Res.	Res.	Res.	Res.	Res.	Res.	Res.	Res.	Res.	Res.	Res.	Res.	Res.

15	14	13	12	11	10	9	8	7	6	5	4	3	2	1	0
Res.	Res.	Res.	Res.	Res.	Res.	Res.	Res.	Res.	DOWN	UP	ARR OK	CMP OK	EXT TRIG	ARRM	CMPM
									r	r	r	r	r	r	r

Bits 31:7 Reserved, must be kept at reset value.

Bit 6 **DOWN**: Counter direction change up to down

In Encoder mode, DOWN bit is set by hardware to inform application that the counter direction has changed from up to down. DOWN flag can be cleared by writing 1 to the DOWNCF bit in the LPTIM_ICR register.

Note: If the LPTIM does not support encoder mode feature, this bit is reserved. Please refer to Section 34.3: LPTIM implementation.

Bit 5 **UP**: Counter direction change down to up

In Encoder mode, UP bit is set by hardware to inform application that the counter direction has changed from down to up. UP flag can be cleared by writing 1 to the UPCF bit in the LPTIM_ICR register.

Note: If the LPTIM does not support encoder mode feature, this bit is reserved. Please refer to Section 34.3: LPTIM implementation.

Bit 4 **ARROK**: Autoreload register update OK

ARROK is set by hardware to inform application that the APB bus write operation to the LPTIM_ARR register has been successfully completed. ARROK flag can be cleared by writing 1 to the ARROKCF bit in the LPTIM_ICR register.

Bit 3 **CMPOK**: Compare register update OK

CMPOK is set by hardware to inform application that the APB bus write operation to the LPTIM_CMP register has been successfully completed.

Bit 2 **EXTTRIG**: External trigger edge event

EXTTRIG is set by hardware to inform application that a valid edge on the selected external trigger input has occurred. If the trigger is ignored because the timer has already started, then this flag is not set. EXTTRIG flag can be cleared by writing 1 to the EXTTRIGCF bit in the LPTIM_ICR register.

Bit 1 **ARRM**: Autoreload match

ARRM is set by hardware to inform application that LPTIM_CNT register's value reached the LPTIM_ARR register's value. ARRM flag can be cleared by writing 1 to the ARRMCF bit in the LPTIM_ICR register.

Bit 0 **CMPM**: Compare match

The CMPM bit is set by hardware to inform application that LPTIM_CNT register value reached the LPTIM_CMP register's value.

34.7.2 LPTIM interrupt clear register (LPTIM_ICR)

Address offset: 0x004

Reset value: 0x0000 0000

31	30	29	28	27	26	25	24	23	22	21	20	19	18	17	16
Res.	Res.	Res.	Res.	Res.	Res.	Res.	Res.	Res.	Res.	Res.	Res.	Res.	Res.	Res.	Res.

15	14	13	12	11	10	9	8	7	6	5	4	3	2	1	0
Res.	Res.	Res.	Res.	Res.	Res.	Res.	Res.	Res.	DOWNCF	UPCF	ARROKCF	CMPOKCF	EXTTRIGCF	ARRMCF	CMPMCF
									w	w	w	w	w	w	w

Bits 31:9 Reserved, must be kept at reset value.

Bits 8:7 Reserved, must be kept at reset value.

Bit 6 **DOWNCF**: Direction change to down clear flag

Writing 1 to this bit clear the DOWN flag in the LPTIM_ISR register.

Note: If the LPTIM does not support encoder mode feature, this bit is reserved. Please refer to Section 34.3: LPTIM implementation.

Bit 5 **UPCF**: Direction change to UP clear flag

Writing 1 to this bit clear the UP flag in the LPTIM_ISR register.

Note: If the LPTIM does not support encoder mode feature, this bit is reserved. Please refer to Section 34.3: LPTIM implementation.

Bit 4 **ARROKCF**: Autoreload register update OK clear flag

Writing 1 to this bit clears the ARROK flag in the LPTIM_ISR register

Bit 3 **CMPOKCF**: Compare register update OK clear flag

Writing 1 to this bit clears the CMPOK flag in the LPTIM_ISR register

Bit 2 **EXTTRIGCF**: External trigger valid edge clear flag

Writing 1 to this bit clears the EXTTRIG flag in the LPTIM_ISR register

Bit 1 **ARRMCF**: Autoreload match clear flag

Writing 1 to this bit clears the ARRM flag in the LPTIM_ISR register

Bit 0 **CMPMCF**: Compare match clear flag

Writing 1 to this bit clears the CMP flag in the LPTIM_ISR register

34.7.3 LPTIM interrupt enable register (LPTIM_IER)

Address offset: 0x008

Reset value: 0x0000 0000

31	30	29	28	27	26	25	24	23	22	21	20	19	18	17	16
Res.	Res.	Res.	Res.	Res.	Res.	Res.	Res.	Res.	Res.	Res.	Res.	Res.	Res.	Res.	Res.

15	14	13	12	11	10	9	8	7	6	5	4	3	2	1	0
Res.	Res.	Res.	Res.	Res.	Res.	Res.	Res.	Res.	DOWNIE	UPIE	ARROKIE	CMPOKIE	EXTTRIGIE	ARRMIE	CMPMIE
									rw	rw	rw	rw	rw	rw	rw

Bits 31:9 Reserved, must be kept at reset value.

Bits 8:7 Reserved, must be kept at reset value.

Bit 6 **DOWNIE**: Direction change to down Interrupt Enable
- 0: DOWN interrupt disabled
- 1: DOWN interrupt enabled

Note: If the LPTIM does not support encoder mode feature, this bit is reserved. Please refer to Section 34.3: LPTIM implementation.

Bit 5 **UPIE**: Direction change to UP Interrupt Enable
- 0: UP interrupt disabled
- 1: UP interrupt enabled

Note: If the LPTIM does not support encoder mode feature, this bit is reserved. Please refer to Section 34.3: LPTIM implementation.

Bit 4 **ARROKIE**: Autoreload register update OK Interrupt Enable
- 0: ARROK interrupt disabled
- 1: ARROK interrupt enabled

Bit 3 **CMPOKIE**: Compare register update OK Interrupt Enable
- 0: CMPOK interrupt disabled
- 1: CMPOK interrupt enabled

Bit 2 **EXTTRIGIE**: External trigger valid edge Interrupt Enable
- 0: EXTTRIG interrupt disabled
- 1: EXTTRIG interrupt enabled

Bit 1 **ARRMIE**: Autoreload match Interrupt Enable
- 0: ARRM interrupt disabled
- 1: ARRM interrupt enabled

Bit 0 **CMPMIE**: Compare match Interrupt Enable
- 0: CMPM interrupt disabled
- 1: CMPM interrupt enabled

Caution: The LPTIM_IER register must only be modified when the LPTIM is disabled (ENABLE bit reset to ‘0’)

34.7.4 LPTIM configuration register (LPTIM_CFGR)

Address offset: 0x00C

Reset value: 0x0000 0000

31	30	29	28	27	26	25	24	23	22	21	20	19	18	17	16
Res.	Res.	Res.	Res.	Res.	Res.	Res.	ENC	COUNT MODE	PRELOAD	WAVPOL	WAVE	TIMOUT	TRIGEN[1:0]		Res.
							rw	rw	rw	rw	rw	rw	rw	rw	

15	14	13	12	11	10	9	8	7	6	5	4	3	2	1	0
TRIGSEL[2:0]			Res.	PRESC[2:0]			Res.	TRGFLT[1:0]		Res.	CKFLT[1:0]		CKPOL[1:0]		CKSEL
rw	rw	rw		rw	rw	rw		rw	rw		rw	rw	rw	rw	rw

Bits 31:30 Reserved, must be kept at reset value.

Bit 29 Reserved, must be kept at reset value.

Bits 28:25 Reserved, must be kept at reset value.

Bit 24 **ENC**: Encoder mode enable

The ENC bit controls the Encoder mode

0: Encoder mode disabled

1: Encoder mode enabled

Note: If the LPTIM does not support encoder mode feature, this bit is reserved. Please refer to Section 34.3: LPTIM implementation.

Bit 23 **COUNTMODE**: counter mode enabled

The COUNTMODE bit selects which clock source is used by the LPTIM to clock the counter:

0: the counter is incremented following each internal clock pulse

1: the counter is incremented following each valid clock pulse on the LPTIM external Input1

Bit 22 **PRELOAD**: Registers update mode

The PRELOAD bit controls the LPTIM_ARR and the LPTIM_CMP registers update modality

0: Registers are updated after each APB bus write access

1: Registers are updated at the end of the current LPTIM period

Bit 21 **WAVPOL**: Waveform shape polarity

The WAVEPOL bit controls the output polarity

0: The LPTIM output reflects the compare results between LPTIM_ARR and LPTIM_CMP registers

1: The LPTIM output reflects the inverse of the compare results between LPTIM_ARR and LPTIM_CMP registers

Bit 20 **WAVE**: Waveform shape

The WAVE bit controls the output shape

0: Deactivate Set-once mode, PWM or One Pulse waveform depending on how the timer was started, CNTSTRT for PWM or SNGSTRT for One Pulse waveform.

1: Activate the Set-once mode

Bit 19 **TIMOUT**: Timeout enable

The TIMOUT bit controls the Timeout feature

0: A trigger event arriving when the timer is already started will be ignored

1: A trigger event arriving when the timer is already started will reset and restart the counter

Bits 18:17 **TRIGEN[1:0]**: Trigger enable and polarity

The TRIGEN bits controls whether the LPTIM counter is started by an external trigger or not. If the external trigger option is selected, three configurations are possible for the trigger active edge:

00: software trigger (counting start is initiated by software)

01: rising edge is the active edge

10: falling edge is the active edge

11: both edges are active edges

Bit 16 Reserved, must be kept at reset value.

Bits 15:13 **TRIGSEL[2:0]**: Trigger selector

The TRIGSEL bits select the trigger source that will serve as a trigger event for the LPTIM among the below 8 available sources:

000: lptim_ext_trig0
001: lptim_ext_trig1
010: lptim_ext_trig2
011: lptim_ext_trig3
100: lptim_ext_trig4
101: lptim_ext_trig5
110: lptim_ext_trig6
111: lptim_ext_trig7

See *Section 34.4.2: LPTIM trigger mapping* for details.

Bit 12 Reserved, must be kept at reset value.

Bits 11:9 **PRESC[2:0]:** Clock prescaler

The PRESC bits configure the prescaler division factor. It can be one among the following division factors:

000: /1
001: /2
010: /4
011: /8
100: /16
101: /32
110: /64
111: /128

Bit 8 Reserved, must be kept at reset value.

Bits 7:6 **TRGFLT[1:0]:** Configurable digital filter for trigger

The TRGFLT value sets the number of consecutive equal samples that should be detected when a level change occurs on an internal trigger before it is considered as a valid level transition. An internal clock source must be present to use this feature

00: any trigger active level change is considered as a valid trigger
01: trigger active level change must be stable for at least 2 clock periods before it is considered as valid trigger.
10: trigger active level change must be stable for at least 4 clock periods before it is considered as valid trigger.
11: trigger active level change must be stable for at least 8 clock periods before it is considered as valid trigger.

Bit 5 Reserved, must be kept at reset value.

Bits 4:3 **CKFLT[1:0]:** Configurable digital filter for external clock

The CKFLT value sets the number of consecutive equal samples that should be detected when a level change occurs on an external clock signal before it is considered as a valid level transition. An internal clock source must be present to use this feature

00: any external clock signal level change is considered as a valid transition

01: external clock signal level change must be stable for at least 2 clock periods before it is considered as valid transition.

10: external clock signal level change must be stable for at least 4 clock periods before it is considered as valid transition.

11: external clock signal level change must be stable for at least 8 clock periods before it is considered as valid transition.

Bits 2:1 **CKPOL[1:0]:** Clock Polarity

If LPTIM is clocked by an external clock source:

When the LPTIM is clocked by an external clock source, CKPOL bits is used to configure the active edge or edges used by the counter:

00:the rising edge is the active edge used for counting.
If the LPTIM is configured in Encoder mode (ENC bit is set), the encoder sub-mode 1 is active.

01:the falling edge is the active edge used for counting
If the LPTIM is configured in Encoder mode (ENC bit is set), the encoder sub-mode 2 is active.

10:both edges are active edges. When both external clock signal edges are considered active ones, the LPTIM must also be clocked by an internal clock source with a frequency equal to at least four times the external clock frequency.
If the LPTIM is configured in Encoder mode (ENC bit is set), the encoder sub-mode 3 is active.

11:not allowed

Refer to *Section 34.4.13: Encoder mode* for more details about Encoder mode sub-modes.

Bit 0 **CKSEL:** Clock selector

The CKSEL bit selects which clock source the LPTIM will use:

0: LPTIM is clocked by internal clock source (APB clock or any of the embedded oscillators)

1: LPTIM is clocked by an external clock source through the LPTIM external Input1

Caution: The LPTIM_CFGR register must only be modified when the LPTIM is disabled (ENABLE bit reset to ‘0’).

34.7.5 LPTIM control register (LPTIM_CR)

Address offset: 0x010

Reset value: 0x0000 0000

31	30	29	28	27	26	25	24	23	22	21	20	19	18	17	16
Res.	Res.	Res.	Res.	Res.	Res.	Res.	Res.	Res.	Res.	Res.	Res.	Res.	Res.	Res.	Res.

15	14	13	12	11	10	9	8	7	6	5	4	3	2	1	0
Res.	Res.	Res.	Res.	Res.	Res.	Res.	Res.	Res.	Res.	Res.	Res.	Res.	CNT STRT	SNG STRT	ENA BLE
													rw	rw	rw

Bits 31:3 Reserved, must be kept at reset value.

Bit 2 **CNTSTRT:** Timer start in Continuous mode

This bit is set by software and cleared by hardware.
In case of software start (TRIGEN[1:0] = ‘00’), setting this bit starts the LPTIM in Continuous mode.
If the software start is disabled (TRIGEN[1:0] different than ‘00’), setting this bit starts the timer in Continuous mode as soon as an external trigger is detected.
If this bit is set when a single pulse mode counting is ongoing, then the timer will not stop at the next match between the LPTIM_ARR and LPTIM_CNT registers and the LPTIM counter keeps counting in Continuous mode.
This bit can be set only when the LPTIM is enabled. It will be automatically reset by hardware.

Bit 1 **SNGSTRT:** LPTIM start in Single mode

This bit is set by software and cleared by hardware.
In case of software start (TRIGEN[1:0] = ‘00’), setting this bit starts the LPTIM in single pulse mode.
If the software start is disabled (TRIGEN[1:0] different than ‘00’), setting this bit starts the LPTIM in single pulse mode as soon as an external trigger is detected.
If this bit is set when the LPTIM is in continuous counting mode, then the LPTIM will stop at the following match between LPTIM_ARR and LPTIM_CNT registers.
This bit can only be set when the LPTIM is enabled. It will be automatically reset by hardware.

Bit 0 **ENABLE:** LPTIM enable

The ENABLE bit is set and cleared by software.
0:LPTIM is disabled
1:LPTIM is enabled

34.7.6 LPTIM compare register (LPTIM_CMP)

Address offset: 0x014

Reset value: 0x0000 0000

31	30	29	28	27	26	25	24	23	22	21	20	19	18	17	16
Res.	Res.	Res.	Res.	Res.	Res.	Res.	Res.	Res.	Res.	Res.	Res.	Res.	Res.	Res.	Res.

15	14	13	12	11	10	9	8	7	6	5	4	3	2	1	0
CMP[15:0]															
rw	rw	rw	rw	rw	rw	rw	rw	rw	rw	rw	rw	rw	rw	rw	rw

Bits 31:16 Reserved, must be kept at reset value.

Bits 15:0 **CMP[15:0]:** Compare value

CMP is the compare value used by the LPTIM.

Caution: The LPTIM_CMP register must only be modified when the LPTIM is enabled (ENABLE bit set to ‘1’).

34.7.7 LPTIM autoreload register (LPTIM_ARR)

Address offset: 0x018

Reset value: 0x0000 0001

31	30	29	28	27	26	25	24	23	22	21	20	19	18	17	16
Res.	Res.	Res.	Res.	Res.	Res.	Res.	Res.	Res.	Res.	Res.	Res.	Res.	Res.	Res.	Res.

15	14	13	12	11	10	9	8	7	6	5	4	3	2	1	0
ARR[15:0]															
rw	rw	rw	rw	rw	rw	rw	rw	rw	rw	rw	rw	rw	rw	rw	rw

Bits 31:16 Reserved, must be kept at reset value.

Bits 15:0 **ARR[15:0]:** Auto reload value

ARR is the autoreload value for the LPTIM.

This value must be strictly greater than the CMP[15:0] value.

Caution: The LPTIM_ARR register must only be modified when the LPTIM is enabled (ENABLE bit set to ‘1’).

34.7.8 LPTIM counter register (LPTIM_CNT)

Address offset: 0x01C

Reset value: 0x0000 0000

31	30	29	28	27	26	25	24	23	22	21	20	19	18	17	16
Res.	Res.	Res.	Res.	Res.	Res.	Res.	Res.	Res.	Res.	Res.	Res.	Res.	Res.	Res.	Res.

15	14	13	12	11	10	9	8	7	6	5	4	3	2	1	0
CNT[15:0]															
r	r	r	r	r	r	r	r	r	r	r	r	r	r	r	r

Bits 31:16 Reserved, must be kept at reset value.

Bits 15:0 **CNT[15:0]:** Counter value

When the LPTIM is running with an asynchronous clock, reading the LPTIM_CNT register may return unreliable values. So in this case it is necessary to perform two consecutive read accesses and verify that the two returned values are identical.

It should be noted that for a reliable LPTIM_CNT register read access, two consecutive read accesses must be performed and compared. A read access can be considered reliable when the values of the two consecutive read accesses are equal.

34.7.9 LPTIM1 option register (LPTIM1_OR)

Address offset: 0x020

Reset value: 0x0000 0000

31	30	29	28	27	26	25	24	23	22	21	20	19	18	17	16
Res.	Res.	Res.	Res.	Res.	Res.	Res.	Res.	Res.	Res.	Res.	Res.	Res.	Res.	Res.	Res.
15	14	13	12	11	10	9	8	7	6	5	4	3	2	1	0
Res.	Res.	Res.	Res.	Res.	Res.	Res.	Res.	Res.	Res.	Res.	Res.	Res.	Res.	OR_1	OR_0
														rw	rw

Bits 31:2 Reserved, must be kept at reset value.

Bit 1 **OR_1**: Option register bit 1
- 0: LPTIM1 input 2 is connected to I/O
- 1: LPTIM1 input 2 is connected to COMP2_OUT

Bit 0 **OR_0**: Option register bit 0
- 0: LPTIM1 input 1 is connected to I/O
- 1: LPTIM1 input 1 is connected to COMP1_OUT

34.7.10 LPTIM2 option register (LPTIM2_OR)

Address offset: 0x020

Reset value: 0x0000 0000

31	30	29	28	27	26	25	24	23	22	21	20	19	18	17	16
Res.	Res.	Res.	Res.	Res.	Res.	Res.	Res.	Res.	Res.	Res.	Res.	Res.	Res.	Res.	Res.
15	14	13	12	11	10	9	8	7	6	5	4	3	2	1	0
Res.	Res.	Res.	Res.	Res.	Res.	Res.	Res.	Res.	Res.	Res.	Res.	Res.	Res.	OR_1	OR_0
														rw	rw

Bits 31:2 Reserved, must be kept at reset value.

Bit 1 **OR_1**: Option register bit 1
- 0: LPTIM2 input 1 is connected to I/O
- 1: LPTIM2 input 1 is connected to COMP2_OUT

Bit 0 **OR_0**: Option register bit 0
- 0: LPTIM2 input 1 is connected to I/O
- 1: LPTIM2 input 1 is connected to COMP1_OUT

Note: When both OR_1 and OR_0 are set, LPTIM2 input 1 is connected to (COMP1_OUT OR COMP2_OUT).

34.7.11 LPTIM register map

The following table summarizes the LPTIM registers.

Table 218. LPTIM register map and reset values

Offset	Register name	31	30	29	28	27	26	25	24	23	22	21	20	19	18	17	16	15	14	13	12	11	10	9	8	7	6	5	4	3	2	1	0
0x000	LPTIM_ISR	Res.	Res.	Res.	Res.	Res.	Res.	Res.	Res.	Res.	Res.	Res.	Res.	Res.	Res.	Res.	Res.	Res.	Res.	Res.	Res.	Res.	Res.	Res.	Res.	Res.	DOWN(1)	UP(1)	ARROK	CMPOK	EXTTRIG	ARRM	CMPM
	Reset value																										0	0	0	0	0	0	0
0x004	LPTIM_ICR	Res.	Res.	Res.	Res.	Res.	Res.	Res.	Res.	Res.	Res.	Res.	Res.	Res.	Res.	Res.	Res.	Res.	Res.	Res.	Res.	Res.	Res.	Res.	Res.	Res.	DOWNCF(1)	UPCF(1)	ARROKCF	CMPOKCF	EXTTRIGCF	ARRMCF	CMPMCF
	Reset value																										0	0	0	0	0	0	0
0x008	LPTIM_IER	Res.	Res.	Res.	Res.	Res.	Res.	Res.	Res.	Res.	Res.	Res.	Res.	Res.	Res.	Res.	Res.	Res.	Res.	Res.	Res.	Res.	Res.	Res.	Res.	Res.	DOWNIE(1)	UPIE(1)	ARROKIE	CMPOKIE	EXTTRIGIE	ARRMIE	CMPMIE
	Reset value																										0	0	0	0	0	0	0
0x00C	LPTIM_CFGR	Res.	Res.	Res.	Res.	Res.	Res.	Res.	ENC(1)	COUNTMODE	PRELOAD	WAVEPOL	WAVE	TIMOUT	TRIGEN		Res.	TRIGSEL[2:0]			Res.	PRESC			Res.	TRGFLT		Res.	CKFLT		CKPOL		CKSEL
	Reset value								0	0	0	0	0	0	0	0		0	0	0		0	0	0		0	0		0	0	0	0	0
0x010	LPTIM_CR	Res.	Res.	Res.	Res.	Res.	Res.	Res.	Res.	Res.	Res.	Res.	Res.	Res.	Res.	Res.	Res.	Res.	Res.	Res.	Res.	Res.	Res.	Res.	Res.	Res.	Res.	Res.	Res.	Res.	CNTSTRT	SNGSTRT	ENABLE
	Reset value																														0	0	0
0x014	LPTIM_CMP	Res.	Res.	Res.	Res.	Res.	Res.	Res.	Res.	Res.	Res.	Res.	Res.	Res.	Res.	Res.	Res.	CMP[15:0]															
	Reset value																	0	0	0	0	0	0	0	0	0	0	0	0	0	0	0	0
0x018	LPTIM_ARR	Res.	Res.	Res.	Res.	Res.	Res.	Res.	Res.	Res.	Res.	Res.	Res.	Res.	Res.	Res.	Res.	ARR[15:0]															
	Reset value																	0	0	0	0	0	0	0	0	0	0	0	0	0	0	0	1
0x01C	LPTIM_CNT	Res.	Res.	Res.	Res.	Res.	Res.	Res.	Res.	Res.	Res.	Res.	Res.	Res.	Res.	Res.	Res.	CNT[15:0]															
	Reset value																	0	0	0	0	0	0	0	0	0	0	0	0	0	0	0	0
0x020	LPTIM_OR	Res.	Res.	Res.	Res.	Res.	Res.	Res.	Res.	Res.	Res.	Res.	Res.	Res.	Res.	Res.	Res.	Res.	Res.	Res.	Res.	Res.	Res.	Res.	Res.	Res.	Res.	Res.	Res.	Res.	Res.	OR_1	OR_0
	Reset value																															0	0

1. *If LPTIM does not support encoder mode feature, this bit is reserved. Please refer to Section 34.3: LPTIM implementation.*

Refer to *Section 2.2 on page 75* for the register boundary addresses.

35 Infrared interface (IRTIM)

An infrared interface (IRTIM) for remote control is available on the device. It can be used with an infrared LED to perform remote control functions.

It uses internal connections with TIM16 and TIM17 as shown in *Figure 383*.

To generate the infrared remote control signals, the IR interface must be enabled and TIM16 channel 1 (TIM16_OC1) and TIM17 channel 1 (TIM17_OC1) must be properly configured to generate correct waveforms.

The infrared receiver can be implemented easily through a basic input capture mode.

Figure 383. IRTIM internal hardware connections with TIM16 and TIM17

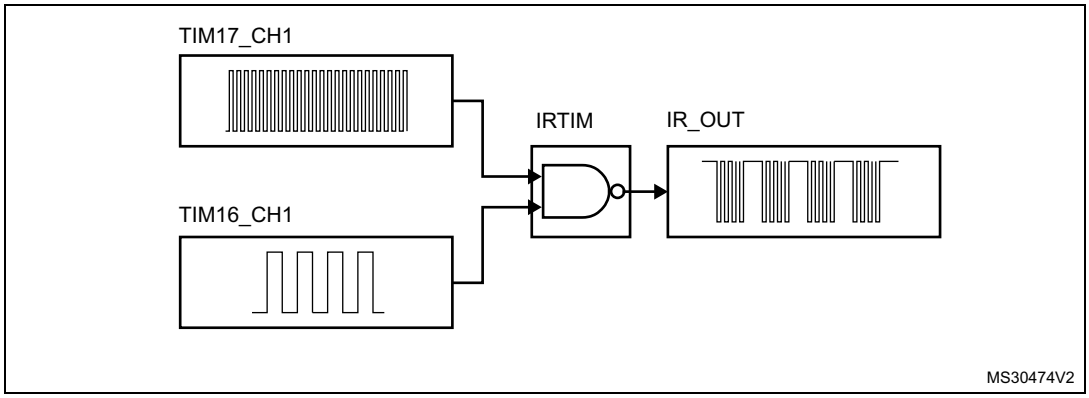

All standard IR pulse modulation modes can be obtained by programming the two timer output compare channels.

TIM17 is used to generate the high frequency carrier signal, while TIM16 generates the modulation envelope.

The infrared function is output on the IR_OUT pin. The activation of this function is done through the GPIOx_AFRx register by enabling the related alternate function bit.

The high sink LED driver capability (only available on the PB9 pin) can be activated through the I2C_PB9_FMP bit in the SYSCFG_CFGR1 register and used to sink the high current needed to directly control an infrared LED.

36 Independent watchdog (IWDG)

36.1 Introduction

The devices feature an embedded watchdog peripheral that offers a combination of high safety level, timing accuracy and flexibility of use. The Independent watchdog peripheral detects and solves malfunctions due to software failure, and triggers system reset when the counter reaches a given timeout value.

The independent watchdog (IWDG) is clocked by its own dedicated low-speed clock (LSI) and thus stays active even if the main clock fails.

The IWDG is best suited for applications that require the watchdog to run as a totally independent process outside the main application, but have lower timing accuracy constraints. For further information on the window watchdog, refer to *Section 37 on page 1218*.

36.2 IWDG main features

- Free-running downcounter
- Clocked from an independent RC oscillator (can operate in Standby and Stop modes)
- Conditional reset
  - Reset (if watchdog activated) when the downcounter value becomes lower than 0x000
  - Reset (if watchdog activated) if the downcounter is reloaded outside the window

36.3 IWDG functional description

36.3.1 IWDG block diagram

Figure 384 shows the functional blocks of the independent watchdog module.

Figure 384. Independent watchdog block diagram

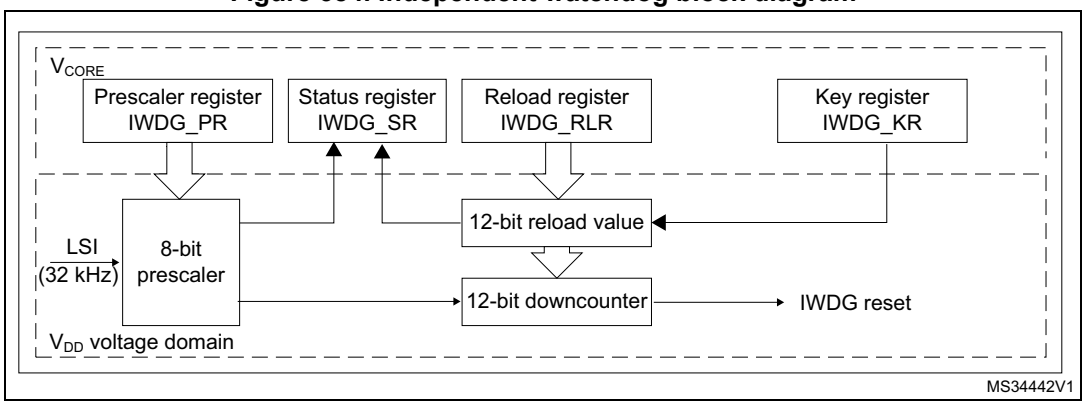

1. The register interface is located in the V_{CORE} voltage domain. The watchdog function is located in the V_{DD} voltage domain, still functional in Stop and Standby modes.

When the independent watchdog is started by writing the value 0x0000 CCCC in the *IWDG key register (IWDG_KR)*, the counter starts counting down from the reset value of 0xFFF. When it reaches the end of count value (0x000) a reset signal is generated (IWDG reset).

Whenever the key value 0x0000 AAAA is written in the *IWDG key register (IWDG_KR)*, the IWDG_RLR value is reloaded in the counter and the watchdog reset is prevented.

Once running, the IWDG cannot be stopped.

36.3.2 Window option

The IWDG can also work as a window watchdog by setting the appropriate window in the *IWDG window register (IWDG_WINR)*.

If the reload operation is performed while the counter is greater than the value stored in the *IWDG window register (IWDG_WINR)*, then a reset is provided.

The default value of the *IWDG window register (IWDG_WINR)* is 0x0000 0FFF, so if it is not updated, the window option is disabled.

As soon as the window value is changed, a reload operation is performed in order to reset the downcounter to the *IWDG reload register (IWDG_RLR)* value and ease the cycle number calculation to generate the next reload.

Configuring the IWDG when the window option is enabled

1. Enable the IWDG by writing 0x0000 CCCC in the *IWDG key register (IWDG_KR)*.
2. Enable register access by writing 0x0000 5555 in the *IWDG key register (IWDG_KR)*.
3. Write the IWDG prescaler by programming *IWDG prescaler register (IWDG_PR)* from 0 to 7.
4. Write the *IWDG reload register (IWDG_RLR)*.
5. Wait for the registers to be updated (IWDG_SR = 0x0000 0000).
6. Write to the *IWDG window register (IWDG_WINR)*. This automatically refreshes the counter value in the *IWDG reload register (IWDG_RLR)*.

Note: Writing the window value allows the counter value to be refreshed by the RLR when IWDG status register (IWDG_SR) is set to 0x0000 0000.

Configuring the IWDG when the window option is disabled

When the window option it is not used, the IWDG can be configured as follows:

1. Enable the IWDG by writing 0x0000 CCCC in the *IWDG key register (IWDG_KR)*.
2. Enable register access by writing 0x0000 5555 in the *IWDG key register (IWDG_KR)*.
3. Write the prescaler by programming the *IWDG prescaler register (IWDG_PR)* from 0 to 7.
4. Write the *IWDG reload register (IWDG_RLR)*.
5. Wait for the registers to be updated (IWDG_SR = 0x0000 0000).
6. Refresh the counter value with IWDG_RLR (IWDG_KR = 0x0000 AAAA).

36.3.3 Hardware watchdog

If the “Hardware watchdog” feature is enabled through the device option bits, the watchdog is automatically enabled at power-on, and generates a reset unless the *IWDG key register (IWDG_KR)* is written by the software before the counter reaches end of count or if the downcounter is reloaded inside the window.

36.3.4 Low-power freeze

Depending on the IWDG_STOP and IWDG_STBY options configuration, the IWDG can continue counting or not during the Stop mode and the Standby mode, respectively. If the IWDG is kept running during Stop or Standby modes, it can wake up the device from this mode. Refer to *Section : User and read protection option bytes* for more details.

36.3.5 Register access protection

Write access to *IWDG prescaler register (IWDG_PR)*, *IWDG reload register (IWDG_RLR)* and *IWDG window register (IWDG_WINR)* is protected. To modify them, the user must first write the code 0x0000 5555 in the *IWDG key register (IWDG_KR)*. A write access to this register with a different value breaks the sequence and register access is protected again. This is the case of the reload operation (writing 0x0000 AAAA).

A status register is available to indicate that an update of the prescaler or of the downcounter reload value or of the window value is ongoing.

36.3.6 Debug mode

When the device enters Debug mode (core halted), the IWDG counter either continues to work normally or stops, depending on the configuration of the corresponding bit in DBGMCU freeze register.

36.4 IWDG registers

Refer to *Section 1.2 on page 69* for a list of abbreviations used in register descriptions.

The peripheral registers can be accessed by half-words (16-bit) or words (32-bit).

36.4.1 IWDG key register (IWDG_KR)

Address offset: 0x00

Reset value: 0x0000 0000 (reset by Standby mode)

31	30	29	28	27	26	25	24	23	22	21	20	19	18	17	16
Res.	Res.	Res.	Res.	Res.	Res.	Res.	Res.	Res.	Res.	Res.	Res.	Res.	Res.	Res.	Res.
15	14	13	12	11	10	9	8	7	6	5	4	3	2	1	0
KEY[15:0]															
w	w	w	w	w	w	w	w	w	w	w	w	w	w	w	w

Bits 31:16 Reserved, must be kept at reset value.

Bits 15:0 **KEY[15:0]:** Key value (write only, read 0x0000)

These bits must be written by software at regular intervals with the key value 0xAAAA, otherwise the watchdog generates a reset when the counter reaches 0.

Writing the key value 0x5555 to enable access to the IWDG_PR, IWDG_RLR and IWDG_WINR registers (see *Section 36.3.5: Register access protection*)

Writing the key value 0xCCCC starts the watchdog (except if the hardware watchdog option is selected)

36.4.2 IWDG prescaler register (IWDG_PR)

Address offset: 0x04

Reset value: 0x0000 0000

31	30	29	28	27	26	25	24	23	22	21	20	19	18	17	16
Res.	Res.	Res.	Res.	Res.	Res.	Res.	Res.	Res.	Res.	Res.	Res.	Res.	Res.	Res.	Res.

15	14	13	12	11	10	9	8	7	6	5	4	3	2	1	0
Res.	Res.	Res.	Res.	Res.	Res.	Res.	Res.	Res.	Res.	Res.	Res.	Res.	PR[2:0]		
													rw	rw	rw

Bits 31:3 Reserved, must be kept at reset value.

Bits 2:0 **PR[2:0]:** Prescaler divider

These bits are write access protected see *Section 36.3.5: Register access protection*. They are written by software to select the prescaler divider feeding the counter clock. PVU bit of the *IWDG status register (IWDG_SR)* must be reset in order to be able to change the prescaler divider.

000: divider /4
001: divider /8
010: divider /16
011: divider /32
100: divider /64
101: divider /128
110: divider /256
111: divider /256

Note: Reading this register returns the prescaler value from the V_{DD} voltage domain. This value may not be up to date/valid if a write operation to this register is ongoing. For this reason the value read from this register is valid only when the PVU bit in the IWDG status register (IWDG_SR) is reset.

36.4.3 IWDG reload register (IWDG_RLR)

Address offset: 0x08

Reset value: 0x0000 0FFF (reset by Standby mode)

31	30	29	28	27	26	25	24	23	22	21	20	19	18	17	16
Res.	Res.	Res.	Res.	Res.	Res.	Res.	Res.	Res.	Res.	Res.	Res.	Res.	Res.	Res.	Res.

15	14	13	12	11	10	9	8	7	6	5	4	3	2	1	0
Res.	Res.	Res.	Res.	RL[11:0]											
				rw	rw	rw	rw	rw	rw	rw	rw	rw	rw	rw	rw

Bits 31:12 Reserved, must be kept at reset value.

Bits 11:0 **RL[11:0]:** Watchdog counter reload value

These bits are write access protected see *Register access protection*. They are written by software to define the value to be loaded in the watchdog counter each time the value 0xAAAA is written in the *IWDG key register (IWDG_KR)*. The watchdog counter counts down from this value. The timeout period is a function of this value and the clock prescaler. Refer to the datasheet for the timeout information.

The RVU bit in the *IWDG status register (IWDG_SR)* must be reset to be able to change the reload value.

Note: Reading this register returns the reload value from the V_{DD} voltage domain. This value may not be up to date/valid if a write operation to this register is ongoing on it. For this reason the value read from this register is valid only when the RVU bit in the IWDG status register (IWDG_SR) is reset.

36.4.4 IWDG status register (IWDG_SR)

Address offset: 0x0C

Reset value: 0x0000 0000 (not reset by Standby mode)

31	30	29	28	27	26	25	24	23	22	21	20	19	18	17	16
Res.	Res.	Res.	Res.	Res.	Res.	Res.	Res.	Res.	Res.	Res.	Res.	Res.	Res.	Res.	Res.

15	14	13	12	11	10	9	8	7	6	5	4	3	2	1	0
Res.	Res.	Res.	Res.	Res.	Res.	Res.	Res.	Res.	Res.	Res.	Res.	Res.	WVU	RVU	PVU
													r	r	r

Bits 31:3 Reserved, must be kept at reset value.

Bit 2 **WVU:** Watchdog counter window value update

This bit is set by hardware to indicate that an update of the window value is ongoing. It is reset by hardware when the reload value update operation is completed in the V_{DD} voltage domain (takes up to five LSI/Prescaler clock cycles).

Window value can be updated only when WVU bit is reset.

Bit 1 **RVU:** Watchdog counter reload value update

This bit is set by hardware to indicate that an update of the reload value is ongoing. It is reset by hardware when the reload value update operation is completed in the V_{DD} voltage domain (takes up to five LSI/Prescale clock cycles).

Reload value can be updated only when RVU bit is reset.

Bit 0 **PVU:** Watchdog prescaler value update

This bit is set by hardware to indicate that an update of the prescaler value is ongoing. It is reset by hardware when the prescaler update operation is completed in the V_{DD} voltage domain (takes up to five LSI/Prescale clock cycles).

Prescaler value can be updated only when PVU bit is reset.

Note: If several reload, prescaler, or window values are used by the application, it is mandatory to wait until RVU bit is reset before changing the reload value, to wait until PVU bit is reset before changing the prescaler value, and to wait until WVU bit is reset before changing the window value. However, after updating the prescaler and/or the reload/window value it is not necessary to wait until RVU or PVU or WVU is reset before continuing code execution except in case of low-power mode entry.

36.4.5 IWDG window register (IWDG_WINR)

Address offset: 0x10

Reset value: 0x0000 0FFF (reset by Standby mode)

31	30	29	28	27	26	25	24	23	22	21	20	19	18	17	16
Res.	Res.	Res.	Res.	Res.	Res.	Res.	Res.	Res.	Res.	Res.	Res.	Res.	Res.	Res.	Res.

15	14	13	12	11	10	9	8	7	6	5	4	3	2	1	0
Res.	Res.	Res.	Res.	WIN[11:0]											
				rw	rw	rw	rw	rw	rw	rw	rw	rw	rw	rw	rw

Bits 31:12 Reserved, must be kept at reset value.

Bits 11:0 **WIN[11:0]:** Watchdog counter window value

These bits are write access protected, see *Section 36.3.5*, they contain the high limit of the window value to be compared with the downcounter.

To prevent a reset, the downcounter must be reloaded when its value is lower than the window register value and greater than 0x0

The WVU bit in the *IWDG status register (IWDG_SR)* must be reset in order to be able to change the reload value.

Note: Reading this register returns the reload value from the V_{DD} voltage domain. This value may not be valid if a write operation to this register is ongoing. For this reason the value read from this register is valid only when the WVU bit in the IWDG status register (IWDG_SR) is reset.

36.4.6 IWDG register map

The following table gives the IWDG register map and reset values.

Table 219. IWDG register map and reset values

Offset	Register name	31	30	29	28	27	26	25	24	23	22	21	20	19	18	17	16	15	14	13	12	11	10	9	8	7	6	5	4	3	2	1	0
0x00	**IWDG_KR**	Res	Res	Res	Res	Res	Res	Res	Res	Res	Res	Res	Res	Res	Res	Res	Res	KEY[15:0]															
	Reset value																	0	0	0	0	0	0	0	0	0	0	0	0	0	0	0	0
0x04	**IWDG_PR**	Res	Res	Res	Res	Res	Res	Res	Res	Res	Res	Res	Res	Res	Res	Res	Res	Res	Res	Res	Res	Res	Res	Res	Res	Res	Res	Res	Res	Res	PR[2:0]		
	Reset value																														0	0	0
0x08	**IWDG_RLR**	Res	Res	Res	Res	Res	Res	Res	Res	Res	Res	Res	Res	Res	Res	Res	Res	Res	Res	Res	Res	RL[11:0]											
	Reset value																					1	1	1	1	1	1	1	1	1	1	1	1
0x0C	**IWDG_SR**	Res	Res	Res	Res	Res	Res	Res	Res	Res	Res	Res	Res	Res	Res	Res	Res	Res	Res	Res	Res	Res	Res	Res	Res	Res	Res	Res	Res	Res	WVU	RVU	PVU
	Reset value																														0	0	0
0x10	**IWDG_WINR**	Res	Res	Res	Res	Res	Res	Res	Res	Res	Res	Res	Res	Res	Res	Res	Res	Res	Res	Res	Res	WIN[11:0]											
	Reset value																					1	1	1	1	1	1	1	1	1	1	1	1

Refer to *Section 2.2 on page 75* for the register boundary addresses.

37 System window watchdog (WWDG)

37.1 Introduction

The system window watchdog (WWDG) is used to detect the occurrence of a software fault, usually generated by external interference or by unforeseen logical conditions, which causes the application program to abandon its normal sequence. The watchdog circuit generates an MCU reset on expiry of a programmed time period, unless the program refreshes the contents of the down-counter before the T6 bit becomes cleared. An MCU reset is also generated if the 7-bit down-counter value (in the control register) is refreshed before the down-counter has reached the window register value. This implies that the counter must be refreshed in a limited window.

The WWDG clock is prescaled from the APB clock and has a configurable time-window that can be programmed to detect abnormally late or early application behavior.

The WWDG is best suited for applications which require the watchdog to react within an accurate timing window.

37.2 WWDG main features

- Programmable free-running down-counter
- Conditional reset
  - Reset (if watchdog activated) when the down-counter value becomes lower than 0x40
  - Reset (if watchdog activated) if the down-counter is reloaded outside the window (see *Figure 386*)
- Early wakeup interrupt (EWI): triggered (if enabled and the watchdog activated) when the down-counter is equal to 0x40.

37.3 WWDG functional description

If the watchdog is activated (the WDGA bit is set in the WWDG_CR register) and when the 7-bit down-counter (T[6:0] bits) is decremented from 0x40 to 0x3F (T6 becomes cleared), it initiates a reset. If the software reloads the counter while the counter is greater than the value stored in the window register, then a reset is generated.

The application program must write in the WWDG_CR register at regular intervals during normal operation to prevent an MCU reset. This operation must occur only when the counter value is lower than the window register value and higher than 0x3F. The value to be stored in the WWDG_CR register must be between 0xFF and 0xC0.

Refer to *Figure 385* for the WWDG block diagram.

37.3.1 WWDG block diagram

Figure 385. Watchdog block diagram

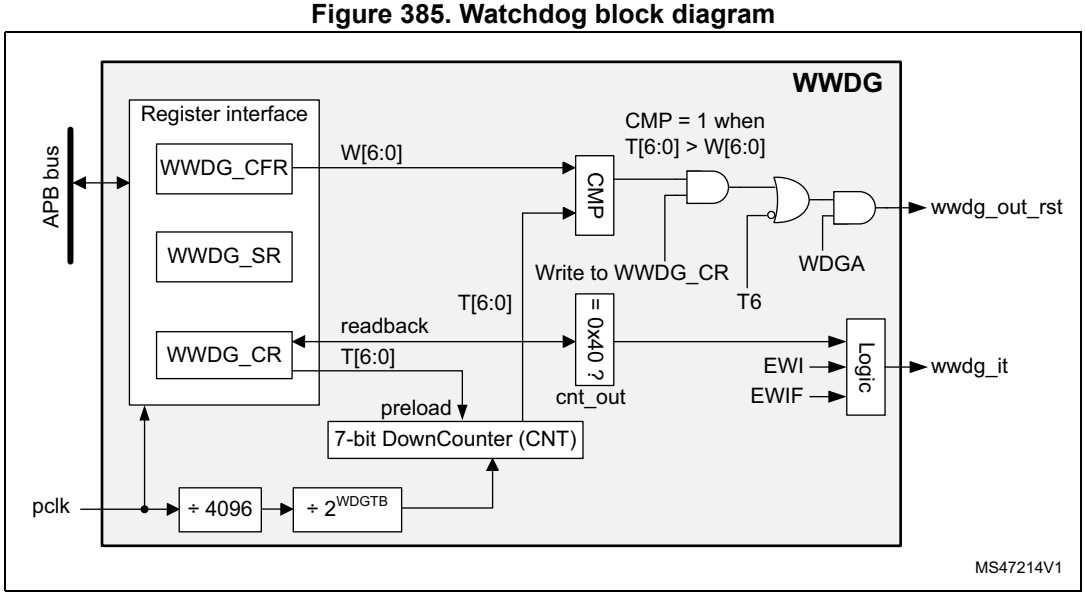

37.3.2 Enabling the watchdog

The watchdog is always disabled after a reset. It is enabled by setting the WDGA bit in the WWDG_CR register, then it cannot be disabled again except by a reset.

37.3.3 Controlling the down-counter

This down-counter is free-running, counting down even if the watchdog is disabled. When the watchdog is enabled, the T6 bit must be set to prevent generating an immediate reset.

The T[5:0] bits contain the number of increments that represent the time delay before the watchdog produces a reset. The timing varies between a minimum and a maximum value due to the unknown status of the prescaler when writing to the WWDG_CR register (see *Figure 386*). The *WWDG configuration register (WWDG_CFR)* contains the high limit of the window: to prevent a reset, the down-counter must be reloaded when its value is lower than the window register value and greater than 0x3F. *Figure 386* describes the window watchdog process.

Note: The T6 bit can be used to generate a software reset (the WDGA bit is set and the T6 bit is cleared).

37.3.4 How to program the watchdog timeout

Use the formula in *Figure 386* to calculate the WWDG timeout.

Warning: When writing to the WWDG_CR register, always write 1 in the T6 bit to avoid generating an immediate reset.

Figure 386. Window watchdog timing diagram

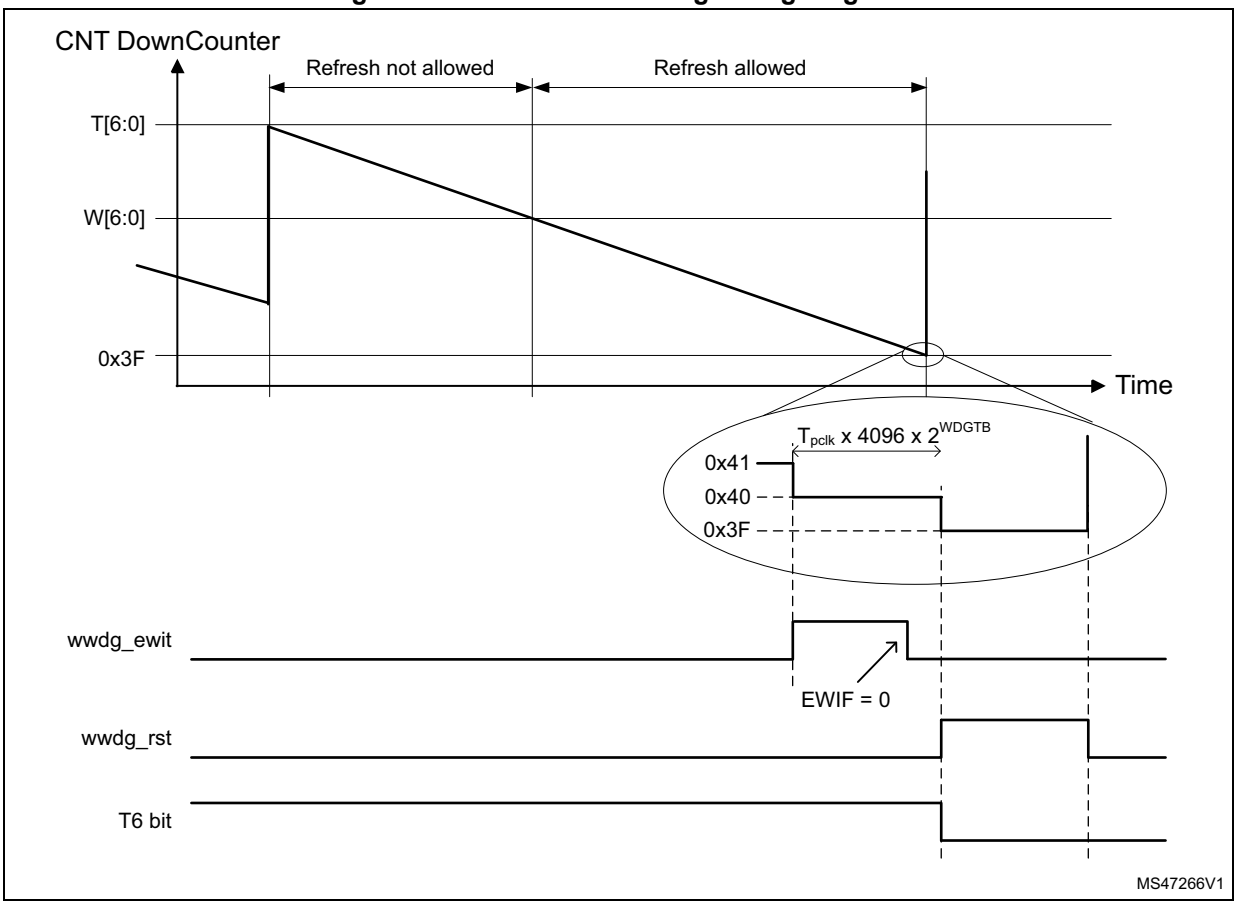

The formula to calculate the timeout value is given by:

$$t_{WWDG} = t_{PCLK} \times 4096 \times 2^{WDGTB[1:0]} \times (T[5:0] + 1) \qquad (ms)$$

where:

t_{WWDG}: WWDG timeout

t_{PCLK}: APB clock period measured in ms

4096: value corresponding to internal divider

As an example, lets assume APB frequency is equal to 48 MHz, WDGTB[1:0] is set to 3 and T[5:0] is set to 63:

$$t_{WWDG} = (1/48000) \times 4096 \times 2^{3} \times (63 + 1) = 43.69ms$$

Refer to the datasheet for the minimum and maximum values of the t_{WWDG}.

37.3.5 Debug mode

When the device enters debug mode (processor halted), the WWDG counter either continues to work normally or stops, depending on the configuration bit in DBG module. For

more details refer to *Section 48.16.2: Debug support for timers, RTC, watchdog, bxCAN and I²C*.

37.4 WWDG interrupts

The early wakeup interrupt (EWI) can be used if specific safety operations or data logging must be performed before the actual reset is generated. The EWI interrupt is enabled by setting the EWI bit in the WWDG_CFR register. When the down-counter reaches the value 0x40, an EWI interrupt is generated and the corresponding interrupt service routine (ISR) can be used to trigger specific actions (such as communications or data logging), before resetting the device.

In some applications, the EWI interrupt can be used to manage a software system check and/or system recovery/graceful degradation, without generating a WWDG reset. In this case, the corresponding interrupt service routine (ISR) has to reload the WWDG counter to avoid the WWDG reset, then trigger the required actions.

The EWI interrupt is cleared by writing '0' to the EWIF bit in the WWDG_SR register.

Note: When the EWI interrupt cannot be served, e.g. due to a system lock in a higher priority task, the WWDG reset is eventually generated.

37.5 WWDG registers

Refer to *Section 1.2 on page 69* for a list of abbreviations used in register descriptions.

The peripheral registers can be accessed by halfwords (16-bit) or words (32-bit).

37.5.1 WWDG control register (WWDG_CR)

Address offset: 0x000

Reset value: 0x0000 007F

31	30	29	28	27	26	25	24	23	22	21	20	19	18	17	16
Res.	Res.	Res.	Res.	Res.	Res.	Res.	Res.	Res.	Res.	Res.	Res.	Res.	Res.	Res.	Res.

15	14	13	12	11	10	9	8	7	6	5	4	3	2	1	0
Res.	Res.	Res.	Res.	Res.	Res.	Res.	Res.	WDGA	T[6:0]						
								rs	rw	rw	rw	rw	rw	rw	rw

Bits 31:8 Reserved, must be kept at reset value.

Bit 7 **WDGA:** Activation bit

This bit is set by software and only cleared by hardware after a reset. When WDGA = 1, the watchdog can generate a reset.

0: Watchdog disabled

1: Watchdog enabled

Bits 6:0 **T[6:0]:** 7-bit counter (MSB to LSB)

These bits contain the value of the watchdog counter, decremented every (4096 x $2^{WDGTB[1:0]}$) PCLK cycles. A reset is produced when it is decremented from 0x40 to 0x3F (T6 becomes cleared).

37.5.2 WWDG configuration register (WWDG_CFR)

Address offset: 0x004

Reset value: 0x0000 007F

31	30	29	28	27	26	25	24	23	22	21	20	19	18	17	16
Res.	Res.	Res.	Res.	Res.	Res.	Res.	Res.	Res.	Res.	Res.	Res.	Res.	Res.	Res.	Res.

15	14	13	12	11	10	9	8	7	6	5	4	3	2	1	0
Res.	Res.	Res.	Res.	Res.	Res.	EWI	WDGTB[1:0]		W[6:0]						
						rs	rw	rw	rw	rw	rw	rw	rw	rw	rw

Bits 31:10 Reserved, must be kept at reset value.

Bit 9 **EWI:** Early wakeup interrupt

When set, an interrupt occurs whenever the counter reaches the value 0x40. This interrupt is only cleared by hardware after a reset.

Bits 8:7 **WDGTB[1:0]:** Timer base

The time base of the prescaler can be modified as follows:
00: CK Counter Clock (PCLK div 4096) div 1
01: CK Counter Clock (PCLK div 4096) div 2
10: CK Counter Clock (PCLK div 4096) div 4
11: CK Counter Clock (PCLK div 4096) div 8

Bits 6:0 **W[6:0]:** 7-bit window value

These bits contain the window value to be compared with the down-counter.

37.5.3 WWDG status register (WWDG_SR)

Address offset: 0x008

Reset value: 0x0000 0000

31	30	29	28	27	26	25	24	23	22	21	20	19	18	17	16
Res.	Res.	Res.	Res.	Res.	Res.	Res.	Res.	Res.	Res.	Res.	Res.	Res.	Res.	Res.	Res.

15	14	13	12	11	10	9	8	7	6	5	4	3	2	1	0
Res.	Res.	Res.	Res.	Res.	Res.	Res.	Res.	Res.	Res.	Res.	Res.	Res.	Res.	Res.	EWIF
															rc_w0

Bits 31:1 Reserved, must be kept at reset value.

Bit 0 **EWIF:** Early wakeup interrupt flag

This bit is set by hardware when the counter has reached the value 0x40. It must be cleared by software by writing ‘0’. Writing ‘1’ has no effect. This bit is also set if the interrupt is not enabled.

37.5.4 WWDG register map

The following table gives the WWDG register map and reset values.

Table 220. WWDG register map and reset values

Offset	Register	31	30	29	28	27	26	25	24	23	22	21	20	19	18	17	16	15	14	13	12	11	10	9	8	7	6	5	4	3	2	1	0
0x000	**WWDG_CR**	Res.	Res.	Res.	Res.	Res.	Res.	Res.	Res.	Res.	Res.	Res.	Res.	Res.	Res.	Res.	Res.	Res.	Res.	Res.	Res.	Res.	Res.	Res.	Res.	WDGA	T[6:0]						
	Reset value																									0	1	1	1	1	1	1	1
0x004	**WWDG_CFR**	Res.	Res.	Res.	Res.	Res.	Res.	Res.	Res.	Res.	Res.	Res.	Res.	Res.	Res.	Res.	Res.	Res.	Res.	Res.	Res.	Res.	Res.	EWI	WDGTB1	WDGTB0	W[6:0]						
	Reset value																							0	0	0	1	1	1	1	1	1	1
0x008	**WWDG_SR**	Res.	Res.	Res.	Res.	Res.	Res.	Res.	Res.	Res.	Res.	Res.	Res.	Res.	Res.	Res.	Res.	Res.	Res.	Res.	Res.	Res.	Res.	Res.	Res.	Res.	Res.	Res.	Res.	Res.	Res.	Res.	EWIF
	Reset value																																0

Refer to *Section 2.2 on page 75* for the register boundary addresses.

38 Real-time clock (RTC)

38.1 Introduction

The RTC provides an automatic wakeup to manage all low-power modes.

The real-time clock (RTC) is an independent BCD timer/counter. The RTC provides a time-of-day clock/calendar with programmable alarm interrupts.

The RTC includes also a periodic programmable wakeup flag with interrupt capability.

Two 32-bit registers contain the seconds, minutes, hours (12- or 24-hour format), day (day of week), date (day of month), month, and year, expressed in binary coded decimal format (BCD). The sub-seconds value is also available in binary format.

Compensations for 28-, 29- (leap year), 30-, and 31-day months are performed automatically. Daylight saving time compensation can also be performed.

Additional 32-bit registers contain the programmable alarm subseconds, seconds, minutes, hours, day, and date.

A digital calibration feature is available to compensate for any deviation in crystal oscillator accuracy.

After Backup domain reset, all RTC registers are protected against possible parasitic write accesses.

As long as the supply voltage remains in the operating range, the RTC never stops, regardless of the device status (Run mode, low-power mode or under reset).

38.2 RTC main features

The RTC unit main features are the following (see *Figure 387: RTC block diagram*):

- Calendar with subseconds, seconds, minutes, hours (12 or 24 format), day (day of week), date (day of month), month, and year.
- Daylight saving compensation programmable by software.
- Programmable alarm with interrupt function. The alarm can be triggered by any combination of the calendar fields.
- Automatic wakeup unit generating a periodic flag that triggers an automatic wakeup interrupt.
- Reference clock detection: a more precise second source clock (50 or 60 Hz) can be used to enhance the calendar precision.
- Accurate synchronization with an external clock using the subsecond shift feature.
- Digital calibration circuit (periodic counter correction): 0.95 ppm accuracy, obtained in a calibration window of several seconds
- Time-stamp function for event saving
- Tamper detection event with configurable filter and internal pull-up
- Maskable interrupts/events:
  - Alarm A
  - Alarm B
  - Wakeup interrupt
  - Time-stamp
  - Tamper detection
- 32 backup registers.

38.3 RTC functional description

38.3.1 RTC block diagram

Figure 387. RTC block diagram

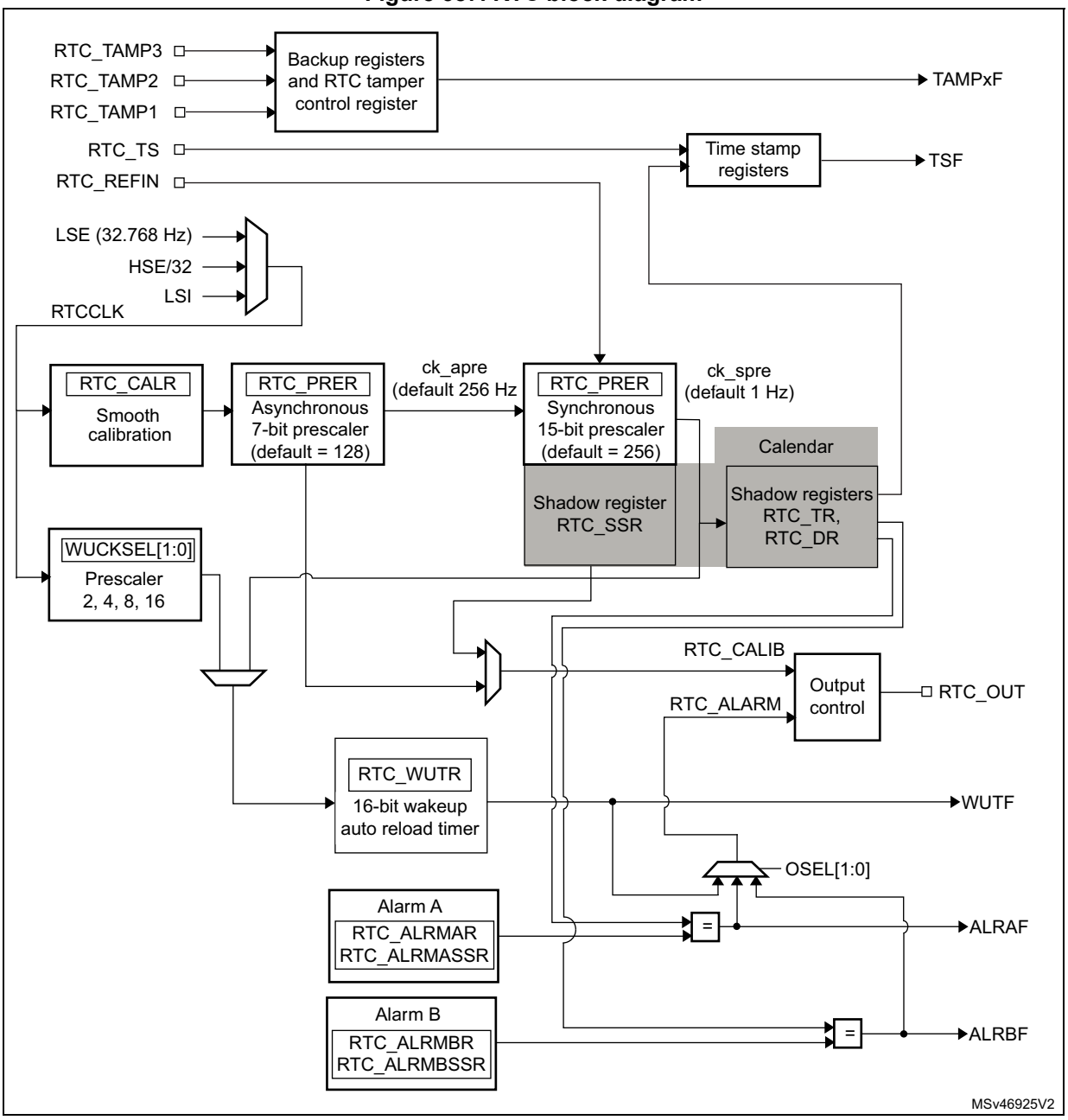

The RTC includes:

- Two alarms
- Three tamper events from I/Os
  - Tamper detection erases the backup registers.
- One timestamp event from I/O
- Tamper event detection can generate a timestamp event
- Timestamp can be generated when a switch to V_{BAT} occurs
- 32 x 32-bit backup registers
  - The backup registers (RTC_BKPxR) are implemented in the RTC domain that remains powered-on by VBAT when the VDD power is switched off.
- Output functions: RTC_OUT which selects one of the following two outputs:
  - RTC_CALIB: 512 Hz or 1Hz clock output (with an LSE frequency of 32.768 kHz). This output is enabled by setting the COE bit in the RTC_CR register.
  - RTC_ALARM: This output is enabled by configuring the OSEL[1:0] bits in the RTC_CR register which select the Alarm A, Alarm B or Wakeup outputs.
- Input functions:
  - RTC_TS: timestamp event
  - RTC_TAMP1: tamper1 event detection
  - RTC_TAMP2: tamper2 event detection
  - RTC_TAMP3: tamper3 event detection
  - RTC_REFIN: 50 or 60 Hz reference clock input

38.3.2 GPIOs controlled by the RTC

RTC_OUT, RTC_TS and RTC_TAMP1 are mapped on the same pin (PC13). PC13 pin configuration is controlled by the RTC, whatever the PC13 GPIO configuration, except for the RTC_ALARM output open-drain mode. In this particular case, the GPIO must be configured as input. The RTC functions mapped on PC13 are available in all low-power modes and in VBAT mode.

The output mechanism follows the priority order shown in *Table 221*.

Table 221. RTC pin PC13 configuration(1)

PC13 Pin configuration and function	OSEL[1:0] bits (RTC_ALARM output enable)	COE bit (RTC_CALIB output enable)	RTC_OUT _RMP bit	RTC_ALARM _TYPE bit	TAMP1E bit (RTC_TAMP1 input enable)	TSE bit (RTC_TS input enable)
RTC_ALARM output OD	01 or 10 or 11	Don’t care	0	0	Don’t care	Don’t care
			1			
RTC_ALARM output PP	01 or 10 or 11	Don’t care	0	1	Don’t care	Don’t care
			1			
RTC_CALIB output PP	00	1	0	Don’t care	Don’t care	Don’t care

Table 221. RTC pin PC13 configuration[1] (continued)

PC13 Pin configuration and function	OSEL[1:0] bits (RTC_ALARM output enable)	COE bit (RTC_CALIB output enable)	RTC_OUT _RMP bit	RTC_ALARM _TYPE bit	TAMP1E bit (RTC_TAMP1 input enable)	TSE bit (RTC_TS input enable)
RTC_TAMP1 input floating	00	0	Don't care	Don't care	1	0
	00	1	1			
	01 or 10 or 11	0				
RTC_TS and RTC_TAMP1 input floating	00	0	Don't care	Don't care	1	1
	00	1	1			
	01 or 10 or 11	0				
RTC_TS input floating	00	0	Don't care	Don't care	0	1
	00	1	1			
	01 or 10 or 11	0				
Wakeup pin or Standard GPIO	00	0	Don't care	Don't care	0	0
	00	1	1			
	01 or 10 or 11	0				

1. OD: open drain; PP: push-pull.

In addition, it is possible to remap RTC_OUT on PB2 pin thanks to RTC_OUT_RMP bit. In this case it is mandatory to configure PB2 GPIO registers as alternate function with the correct type. The remap functions are shown in *Table 222*.

Table 222. RTC_OUT mapping

OSEL[1:0] bits (RTC_ALARM output enable)	COE bit (RTC_CALIB output enable)	RTC_OUT_RMP bit	RTC_OUT on PC13	RTC_OUT on PB2
00	0	0	-	-
00	1		RTC_CALIB	-
01 or 10 or 11	Don't care		RTC_ALARM	-
00	0	1	-	-
00	1		-	RTC_CALIB
01 or 10 or 11	0		-	RTC_ALARM
01 or 10 or 11	1		RTC_ALARM	RTC_CALIB

The table below summarizes the RTC pins and functions capability in all modes.

Table 223. RTC functions over modes

Pin	RTC functions	Functional in all low-power modes except Standby/Shutdown modes	Functional in Standby/Shutdown mode	Functional in V_{BAT} mode
PC13	RTC_TAMP1 RTC_TS RTC_OUT	YES	YES	YES
PA0	RTC_TAMP2	YES	YES	YES
PE6	RTC_TAMP3	YES	YES	YES
PB2	RTC_OUT	YES	NO	NO
PB15	RTC_REFIN	YES	NO	NO

38.3.3 Clock and prescalers

The RTC clock source (RTCCLK) is selected through the clock controller among the LSE clock, the LSI oscillator clock, and the HSE clock. For more information on the RTC clock source configuration, refer to *Section 6: Reset and clock control (RCC)*.

A programmable prescaler stage generates a 1 Hz clock which is used to update the calendar. To minimize power consumption, the prescaler is split into 2 programmable prescalers (see *Figure 387: RTC block diagram*):

- A 7-bit asynchronous prescaler configured through the PREDIV_A bits of the RTC_PRER register.
- A 15-bit synchronous prescaler configured through the PREDIV_S bits of the RTC_PRER register.

Note: When both prescalers are used, it is recommended to configure the asynchronous prescaler to a high value to minimize consumption.

The asynchronous prescaler division factor is set to 128, and the synchronous division factor to 256, to obtain an internal clock frequency of 1 Hz (ck_spre) with an LSE frequency of 32.768 kHz.

The minimum division factor is 1 and the maximum division factor is 2^{22}.

This corresponds to a maximum input frequency of around 4 MHz.

f_{ck_apre} is given by the following formula:

$$f_{CK_APRE} = \frac{f_{RTCCLK}}{PREDIV_A + 1}$$

The ck_apre clock is used to clock the binary RTC_SSR subseconds downcounter. When it reaches 0, RTC_SSR is reloaded with the content of PREDIV_S.

f_{ck_spre} is given by the following formula:

$$f_{CK_SPRE} = \frac{f_{RTCCLK}}{(PREDIV_S + 1) \times (PREDIV_A + 1)}$$

The ck_spre clock can be used either to update the calendar or as timebase for the 16-bit wakeup auto-reload timer. To obtain short timeout periods, the 16-bit wakeup auto-reload timer can also run with the RTCCLK divided by the programmable 4-bit asynchronous prescaler (see *Section 38.3.6: Periodic auto-wakeup* for details).

38.3.4 Real-time clock and calendar

The RTC calendar time and date registers are accessed through shadow registers which are synchronized with PCLK (APB clock). They can also be accessed directly in order to avoid waiting for the synchronization duration.

- RTC_SSR for the subseconds
- RTC_TR for the time
- RTC_DR for the date

Every RTCCLK period, the current calendar value is copied into the shadow registers, and the RSF bit of RTC_ISR register is set (see *Section 38.6.4: RTC initialization and status register (RTC_ISR)*). The copy is not performed in Stop and Standby mode. When exiting these modes, the shadow registers are updated after up to 1 RTCCLK period.

When the application reads the calendar registers, it accesses the content of the shadow registers. It is possible to make a direct access to the calendar registers by setting the BYPSHAD control bit in the RTC_CR register. By default, this bit is cleared, and the user accesses the shadow registers.

When reading the RTC_SSR, RTC_TR or RTC_DR registers in BYPSHAD=0 mode, the frequency of the APB clock (f_{APB}) must be at least 7 times the frequency of the RTC clock (f_{RTCCLK}).

The shadow registers are reset by system reset.

38.3.5 Programmable alarms

The RTC unit provides programmable alarm: Alarm A and Alarm B. The description below is given for Alarm A, but can be translated in the same way for Alarm B.

The programmable alarm function is enabled through the ALRAE bit in the RTC_CR register. The ALRAF is set to 1 if the calendar subseconds, seconds, minutes, hours, date or day match the values programmed in the alarm registers RTC_ALRMASSR and RTC_ALRMAR. Each calendar field can be independently selected through the MSKx bits of the RTC_ALRMAR register, and through the MASKSSx bits of the RTC_ALRMASSR register. The alarm interrupt is enabled through the ALRAIE bit in the RTC_CR register.

Caution: If the seconds field is selected (MSK1 bit reset in RTC_ALRMAR), the synchronous prescaler division factor set in the RTC_PRER register must be at least 3 to ensure correct behavior.

Alarm A and Alarm B (if enabled by bits OSEL[1:0] in RTC_CR register) can be routed to the RTC_ALARM output. RTC_ALARM output polarity can be configured through bit POL the RTC_CR register.

38.3.6 Periodic auto-wakeup

The periodic wakeup flag is generated by a 16-bit programmable auto-reload down-counter. The wakeup timer range can be extended to 17 bits.

The wakeup function is enabled through the WUTE bit in the RTC_CR register.

The wakeup timer clock input can be:

- RTC clock (RTCCLK) divided by 2, 4, 8, or 16.

  When RTCCLK is LSE(32.768kHz), this allows to configure the wakeup interrupt period from 122 µs to 32 s, with a resolution down to 61 µs.
- ck_spre (usually 1 Hz internal clock)

  When ck_spre frequency is 1Hz, this allows to achieve a wakeup time from 1 s to around 36 hours with one-second resolution. This large programmable time range is divided in 2 parts:
  - from 1s to 18 hours when WUCKSEL [2:1] = 10
  - and from around 18h to 36h when WUCKSEL[2:1] = 11. In this last case 2^{16} is added to the 16-bit counter current value.When the initialization sequence is complete (see *Programming the wakeup timer on page 1232*), the timer starts counting down.When the wakeup function is enabled, the down-counting remains active in low-power modes. In addition, when it reaches 0, the WUTF flag is set in the RTC_ISR register, and the wakeup counter is automatically reloaded with its reload value (RTC_WUTR register value).

The WUTF flag must then be cleared by software.

When the periodic wakeup interrupt is enabled by setting the WUTIE bit in the RTC_CR register, it can exit the device from low-power modes.

The periodic wakeup flag can be routed to the RTC_ALARM output provided it has been enabled through bits OSEL[1:0] of RTC_CR register. RTC_ALARM output polarity can be configured through the POL bit in the RTC_CR register.

System reset, as well as low-power modes (Sleep, Stop and Standby) have no influence on the wakeup timer.

38.3.7 RTC initialization and configuration

RTC register access

The RTC registers are 32-bit registers. The APB interface introduces 2 wait-states in RTC register accesses except on read accesses to calendar shadow registers when BYPSHAD=0.

RTC register write protection

After system reset, the RTC registers are protected against parasitic write access by clearing the DBP bit in the PWR_CR1 register (refer to the power control section). DBP bit must be set in order to enable RTC registers write access.

After Backup domain reset, all the RTC registers are write-protected. Writing to the RTC registers is enabled by writing a key into the Write Protection register, RTC_WPR.

The following steps are required to unlock the write protection on all the RTC registers except for RTC_TAMPCR, RTC_BKPxR, RTC_OR and RTC_ISR[13:8].

1. Write ‘0xCA’ into the RTC_WPR register.
2. Write ‘0x53’ into the RTC_WPR register.

Writing a wrong key reactivates the write protection.

The protection mechanism is not affected by system reset.

Calendar initialization and configuration

To program the initial time and date calendar values, including the time format and the prescaler configuration, the following sequence is required:

1. Set INIT bit to 1 in the RTC_ISR register to enter initialization mode. In this mode, the calendar counter is stopped and its value can be updated.
2. Poll INITF bit of in the RTC_ISR register. The initialization phase mode is entered when INITF is set to 1. It takes around 2 RTCCLK clock cycles (due to clock synchronization).
3. To generate a 1 Hz clock for the calendar counter, program both the prescaler factors in RTC_PRER register.
4. Load the initial time and date values in the shadow registers (RTC_TR and RTC_DR), and configure the time format (12 or 24 hours) through the FMT bit in the RTC_CR register.
5. Exit the initialization mode by clearing the INIT bit. The actual calendar counter value is then automatically loaded and the counting restarts after 4 RTCCLK clock cycles.

When the initialization sequence is complete, the calendar starts counting.

Note: After a system reset, the application can read the INITS flag in the RTC_ISR register to check if the calendar has been initialized or not. If this flag equals 0, the calendar has not been initialized since the year field is set at its Backup domain reset default value (0x00).

To read the calendar after initialization, the software must first check that the RSF flag is set in the RTC_ISR register.

Daylight saving time

The daylight saving time management is performed through bits SUB1H, ADD1H, and BKP of the RTC_CR register.

Using SUB1H or ADD1H, the software can subtract or add one hour to the calendar in one single operation without going through the initialization procedure.

In addition, the software can use the BKP bit to memorize this operation.

Programming the alarm

A similar procedure must be followed to program or update the programmable alarms. The procedure below is given for Alarm A but can be translated in the same way for Alarm B.

1. Clear ALRAE in RTC_CR to disable Alarm A.
2. Program the Alarm A registers (RTC_ALRMASSR/RTC_ALRMAR).
3. Set ALRAE in the RTC_CR register to enable Alarm A again.

Note: Each change of the RTC_CR register is taken into account after around 2 RTCCLK clock cycles due to clock synchronization.

Programming the wakeup timer

The following sequence is required to configure or change the wakeup timer auto-reload value (WUT[15:0] in RTC_WUTR):

1. Clear WUTE in RTC_CR to disable the wakeup timer.
2. Poll WUTWF until it is set in RTC_ISR to make sure the access to wakeup auto-reload counter and to WUCKSEL[2:0] bits is allowed. It takes around 2 RTCCLK clock cycles (due to clock synchronization).
3. Program the wakeup auto-reload value WUT[15:0], and the wakeup clock selection (WUCKSEL[2:0] bits in RTC_CR). Set WUTE in RTC_CR to enable the timer again. The wakeup timer restarts down-counting. The WUTWF bit is cleared up to 2 RTCCLK clock cycles after WUTE is cleared, due to clock synchronization.

38.3.8 Reading the calendar

When BYPSHAD control bit is cleared in the RTC_CR register

To read the RTC calendar registers (RTC_SSR, RTC_TR and RTC_DR) properly, the APB clock frequency (f_{PCLK}) must be equal to or greater than seven times the RTC clock frequency (f_{RTCCLK}). This ensures a secure behavior of the synchronization mechanism.

If the APB clock frequency is less than seven times the RTC clock frequency, the software must read the calendar time and date registers twice. If the second read of the RTC_TR gives the same result as the first read, this ensures that the data is correct. Otherwise a third read access must be done. In any case the APB clock frequency must never be lower than the RTC clock frequency.

The RSF bit is set in RTC_ISR register each time the calendar registers are copied into the RTC_SSR, RTC_TR and RTC_DR shadow registers. The copy is performed every RTCCLK cycles. To ensure consistency between the 3 values, reading either RTC_SSR or RTC_TR locks the values in the higher-order calendar shadow registers until RTC_DR is read. In case the software makes read accesses to the calendar in a time interval smaller than 1 RTCCLK period: RSF must be cleared by software after the first calendar read, and then the software must wait until RSF is set before reading again the RTC_SSR, RTC_TR and RTC_DR registers.

After waking up from low-power mode (Stop or Standby), RSF must be cleared by software. The software must then wait until it is set again before reading the RTC_SSR, RTC_TR and RTC_DR registers.

The RSF bit must be cleared after wakeup and not before entering low-power mode.

After a system reset, the software must wait until RSF is set before reading the RTC_SSR, RTC_TR and RTC_DR registers. Indeed, a system reset resets the shadow registers to their default values.

After an initialization (refer to *Calendar initialization and configuration on page 1232*): the software must wait until RSF is set before reading the RTC_SSR, RTC_TR and RTC_DR registers.

After synchronization (refer to *Section 38.3.10: RTC synchronization*): the software must wait until RSF is set before reading the RTC_SSR, RTC_TR and RTC_DR registers.

When the BYPSHAD control bit is set in the RTC_CR register (bypass shadow registers)

Reading the calendar registers gives the values from the calendar counters directly, thus eliminating the need to wait for the RSF bit to be set. This is especially useful after exiting from low-power modes (STOP or Standby), since the shadow registers are not updated during these modes.

When the BYPSHAD bit is set to 1, the results of the different registers might not be coherent with each other if an RTCCLK edge occurs between two read accesses to the registers. Additionally, the value of one of the registers may be incorrect if an RTCCLK edge occurs during the read operation. The software must read all the registers twice, and then compare the results to confirm that the data is coherent and correct. Alternatively, the software can just compare the two results of the least-significant calendar register.

Note: While BYPSHAD=1, instructions which read the calendar registers require one extra APB cycle to complete.

38.3.9 Resetting the RTC

The calendar shadow registers (RTC_SSR, RTC_TR and RTC_DR) and some bits of the RTC status register (RTC_ISR) are reset to their default values by all available system reset sources.

On the contrary, the following registers are reset to their default values by a Backup domain reset and are not affected by a system reset: the RTC current calendar registers, the RTC control register (RTC_CR), the prescaler register (RTC_PRER), the RTC calibration register (RTC_CALR), the RTC shift register (RTC_SHIFTR), the RTC timestamp registers (RTC_TSSSR, RTC_TSTR and RTC_TSDR), the RTC tamper configuration register (RTC_TAMPCR), the RTC backup registers (RTC_BKPxR), the wakeup timer register (RTC_WUTR), the Alarm A and Alarm B registers (RTC_ALRMASSR/RTC_ALRMAR and RTC_ALRMBSSR/RTC_ALRMBR), and the Option register (RTC_OR).

In addition, when it is clocked by the LSE, the RTC keeps on running under system reset if the reset source is different from the Backup domain reset one (refer to the RTC clock section of the Reset and clock controller for details on the list of RTC clock sources not affected by system reset). When a Backup domain reset occurs, the RTC is stopped and all the RTC registers are set to their reset values.

38.3.10 RTC synchronization

The RTC can be synchronized to a remote clock with a high degree of precision. After reading the sub-second field (RTC_SSR or RTC_TSSSR), a calculation can be made of the precise offset between the times being maintained by the remote clock and the RTC. The RTC can then be adjusted to eliminate this offset by “shifting” its clock by a fraction of a second using RTC_SHIFTR.

RTC_SSR contains the value of the synchronous prescaler counter. This allows one to calculate the exact time being maintained by the RTC down to a resolution of 1 / (PREDIV_S + 1) seconds. As a consequence, the resolution can be improved by increasing the synchronous prescaler value (PREDIV_S[14:0]. The maximum resolution allowed (30.52 µs with a 32768 Hz clock) is obtained with PREDIV_S set to 0x7FFF.

However, increasing PREDIV_S means that PREDIV_A must be decreased in order to maintain the synchronous prescaler output at 1 Hz. In this way, the frequency of the asynchronous prescaler output increases, which may increase the RTC dynamic consumption.

The RTC can be finely adjusted using the RTC shift control register (RTC_SHIFTR). Writing to RTC_SHIFTR can shift (either delay or advance) the clock by up to a second with a resolution of 1 / (PREDIV_S + 1) seconds. The shift operation consists of adding the SUBFS[14:0] value to the synchronous prescaler counter SS[15:0]: this will delay the clock.

If at the same time the ADD1S bit is set, this results in adding one second and at the same time subtracting a fraction of second, so this will advance the clock.

Caution: Before initiating a shift operation, the user must check that SS[15] = 0 in order to ensure that no overflow will occur.

As soon as a shift operation is initiated by a write to the RTC_SHIFTR register, the SHPF flag is set by hardware to indicate that a shift operation is pending. This bit is cleared by hardware as soon as the shift operation has completed.

Caution: This synchronization feature is not compatible with the reference clock detection feature: firmware must not write to RTC_SHIFTR when REFCKON=1.

38.3.11 RTC reference clock detection

The update of the RTC calendar can be synchronized to a reference clock, RTC_REFIN, which is usually the mains frequency (50 or 60 Hz). The precision of the RTC_REFIN reference clock should be higher than the 32.768 kHz LSE clock. When the RTC_REFIN detection is enabled (REFCKON bit of RTC_CR set to 1), the calendar is still clocked by the LSE, and RTC_REFIN is used to compensate for the imprecision of the calendar update frequency (1 Hz).

Each 1 Hz clock edge is compared to the nearest RTC_REFIN clock edge (if one is found within a given time window). In most cases, the two clock edges are properly aligned. When the 1 Hz clock becomes misaligned due to the imprecision of the LSE clock, the RTC shifts the 1 Hz clock a bit so that future 1 Hz clock edges are aligned. Thanks to this mechanism, the calendar becomes as precise as the reference clock.

The RTC detects if the reference clock source is present by using the 256 Hz clock (ck_apre) generated from the 32.768 kHz quartz. The detection is performed during a time window around each of the calendar updates (every 1 s). The window equals 7 ck_apre periods when detecting the first reference clock edge. A smaller window of 3 ck_apre periods is used for subsequent calendar updates.

Each time the reference clock is detected in the window, the synchronous prescaler which outputs the ck_spre clock is forced to reload. This has no effect when the reference clock and the 1 Hz clock are aligned because the prescaler is being reloaded at the same moment. When the clocks are not aligned, the reload shifts future 1 Hz clock edges a little for them to be aligned with the reference clock.

If the reference clock halts (no reference clock edge occurred during the 3 ck_apre window), the calendar is updated continuously based solely on the LSE clock. The RTC then waits for the reference clock using a large 7 ck_apre period detection window centered on the ck_spre edge.

When the RTC_REFIN detection is enabled, PREDIV_A and PREDIV_S must be set to their default values:

- PREDIV_A = 0x007F
- PREVID_S = 0x00FF

Note: RTC_REFIN clock detection is not available in Standby mode.

38.3.12 RTC smooth digital calibration

The RTC frequency can be digitally calibrated with a resolution of about 0.954 ppm with a range from -487.1 ppm to +488.5 ppm. The correction of the frequency is performed using

series of small adjustments (adding and/or subtracting individual RTCCLK pulses). These adjustments are fairly well distributed so that the RTC is well calibrated even when observed over short durations of time.

The smooth digital calibration is performed during a cycle of about 2^{20} RTCCLK pulses, or 32 seconds when the input frequency is 32768 Hz. This cycle is maintained by a 20-bit counter, cal_cnt[19:0], clocked by RTCCLK.

The smooth calibration register (RTC_CALR) specifies the number of RTCCLK clock cycles to be masked during the 32-second cycle:

- Setting the bit CALM[0] to 1 causes exactly one pulse to be masked during the 32-second cycle.
- Setting CALM[1] to 1 causes two additional cycles to be masked
- Setting CALM[2] to 1 causes four additional cycles to be masked
- and so on up to CALM[8] set to 1 which causes 256 clocks to be masked.

Note: CALM[8:0] (RTC_CALR) specifies the number of RTCCLK pulses to be masked during the 32-second cycle. Setting the bit CALM[0] to '1' causes exactly one pulse to be masked during the 32-second cycle at the moment when cal_cnt[19:0] is 0x80000; CALM[1]=1 causes two other cycles to be masked (when cal_cnt is 0x40000 and 0xC0000); CALM[2]=1 causes four other cycles to be masked (cal_cnt = 0x20000/0x60000/0xA0000/ 0xE0000); and so on up to CALM[8]=1 which causes 256 clocks to be masked (cal_cnt = 0xXX800).

While CALM allows the RTC frequency to be reduced by up to 487.1 ppm with fine resolution, the bit CALP can be used to increase the frequency by 488.5 ppm. Setting CALP to '1' effectively inserts an extra RTCCLK pulse every 2^{11} RTCCLK cycles, which means that 512 clocks are added during every 32-second cycle.

Using CALM together with CALP, an offset ranging from -511 to +512 RTCCLK cycles can be added during the 32-second cycle, which translates to a calibration range of -487.1 ppm to +488.5 ppm with a resolution of about 0.954 ppm.

The formula to calculate the effective calibrated frequency (F_{CAL}) given the input frequency (F_{RTCCLK}) is as follows:

$$F_{CAL} = F_{RTCCLK} \times [1 + (CALP \times 512 - CALM) / (2^{20} + CALM - CALP \times 512)]$$

Calibration when PREDIV_A<3

The CALP bit can not be set to 1 when the asynchronous prescaler value (PREDIV_A bits in RTC_PRER register) is less than 3. If CALP was already set to 1 and PREDIV_A bits are set to a value less than 3, CALP is ignored and the calibration operates as if CALP was equal to 0.

To perform a calibration with PREDIV_A less than 3, the synchronous prescaler value (PREDIV_S) should be reduced so that each second is accelerated by 8 RTCCLK clock cycles, which is equivalent to adding 256 clock cycles every 32 seconds. As a result, between 255 and 256 clock pulses (corresponding to a calibration range from 243.3 to 244.1 ppm) can effectively be added during each 32-second cycle using only the CALM bits.

With a nominal RTCCLK frequency of 32768 Hz, when PREDIV_A equals 1 (division factor of 2), PREDIV_S should be set to 16379 rather than 16383 (4 less). The only other interesting case is when PREDIV_A equals 0, PREDIV_S should be set to 32759 rather than 32767 (8 less).

If PREDIV_S is reduced in this way, the formula given the effective frequency of the

calibrated input clock is as follows:

$F_{CAL} = F_{RTCCLK} \times [1 + (256 - CALM) / (2^{20} + CALM - 256)]$

In this case, CALM[7:0] equals 0x100 (the midpoint of the CALM range) is the correct setting if RTCCLK is exactly 32768.00 Hz.

Verifying the RTC calibration

RTC precision is ensured by measuring the precise frequency of RTCCLK and calculating the correct CALM value and CALP values. An optional 1 Hz output is provided to allow applications to measure and verify the RTC precision.

Measuring the precise frequency of the RTC over a limited interval can result in a measurement error of up to 2 RTCCLK clock cycles over the measurement period, depending on how the digital calibration cycle is aligned with the measurement period.

However, this measurement error can be eliminated if the measurement period is the same length as the calibration cycle period. In this case, the only error observed is the error due to the resolution of the digital calibration.

- By default, the calibration cycle period is 32 seconds.

Using this mode and measuring the accuracy of the 1 Hz output over exactly 32 seconds guarantees that the measure is within 0.477 ppm (0.5 RTCCLK cycles over 32 seconds, due to the limitation of the calibration resolution).

- CALW16 bit of the RTC_CALR register can be set to 1 to force a 16- second calibration cycle period.

In this case, the RTC precision can be measured during 16 seconds with a maximum error of 0.954 ppm (0.5 RTCCLK cycles over 16 seconds). However, since the calibration resolution is reduced, the long term RTC precision is also reduced to 0.954 ppm: CALM[0] bit is stuck at 0 when CALW16 is set to 1.

- CALW8 bit of the RTC_CALR register can be set to 1 to force a 8- second calibration cycle period.

In this case, the RTC precision can be measured during 8 seconds with a maximum error of 1.907 ppm (0.5 RTCCLK cycles over 8s). The long term RTC precision is also reduced to 1.907 ppm: CALM[1:0] bits are stuck at 00 when CALW8 is set to 1.

Re-calibration on-the-fly

The calibration register (RTC_CALR) can be updated on-the-fly while RTC_ISR/INITF=0, by using the follow process:

1. Poll the RTC_ISR/RECALPF (re-calibration pending flag).
2. If it is set to 0, write a new value to RTC_CALR, if necessary. RECALPF is then automatically set to 1
3. Within three ck_apre cycles after the write operation to RTC_CALR, the new calibration settings take effect.

38.3.13 Time-stamp function

Time-stamp is enabled by setting the TSE or ITSE bits of RTC_CR register to 1.

When TSE is set:

The calendar is saved in the time-stamp registers (RTC_TSSSR, RTC_TSTR, RTC_TSDR) when a time-stamp event is detected on the RTC_TS pin.

When ITSE is set:

The calendar is saved in the time-stamp registers (RTC_TSSSR, RTC_TSTR, RTC_TSDR) when an internal time-stamp event is detected. The internal timestamp event is generated by the switch to the VBAT supply.

When a time-stamp event occurs, due to internal or external event, the time-stamp flag bit (TSF) in RTC_ISR register is set. In case the event is internal, the ITSF flag is also set in RTC_ISR register.

By setting the TSIE bit in the RTC_CR register, an interrupt is generated when a time-stamp event occurs.

If a new time-stamp event is detected while the time-stamp flag (TSF) is already set, the time-stamp overflow flag (TSOVF) flag is set and the time-stamp registers (RTC_TSTR and RTC_TSDR) maintain the results of the previous event.

Note: *TSF is set 2 ck_apre cycles after the time-stamp event occurs due to synchronization process.*

There is no delay in the setting of TSOVF. This means that if two time-stamp events are close together, TSOVF can be seen as '1' while TSF is still '0'. As a consequence, it is recommended to poll TSOVF only after TSF has been set.

Caution: If a time-stamp event occurs immediately after the TSF bit is supposed to be cleared, then both TSF and TSOVF bits are set.To avoid masking a time-stamp event occurring at the same moment, the application must not write ‘0’ into TSF bit unless it has already read it to ‘1’.

Optionally, a tamper event can cause a time-stamp to be recorded. See the description of the TAMPTS control bit in *Section 38.6.16: RTC tamper configuration register (RTC_TAMPCR)*.

38.3.14 Tamper detection

The RTC_TAMPx input events can be configured either for edge detection, or for level detection with filtering.

The tamper detection can be configured for the following purposes:

- erase the RTC backup registers (default configuration)
- generate an interrupt, capable to wakeup from Stop and Standby modes
- generate a hardware trigger for the low-power timers

RTC backup registers

The backup registers (RTC_BKPxR) are not reset by system reset or when the device wakes up from Standby mode.

The backup registers are reset when a tamper detection event occurs (see *Section 38.6.20: RTC backup registers (RTC_BKPxR)* and *Tamper detection initialization on page 1239*) except if the TAMPxNOERASE bit is set, or if TAMPxMF is set in the RTC_TAMPCR register.

Tamper detection initialization

Each input can be enabled by setting the corresponding TAMPxE bits to 1 in the RTC_TAMPCR register.

Each RTC_TAMPx tamper detection input is associated with a flag TAMPxF in the RTC_ISR register.

When TAMPxMF is cleared:

The TAMPxF flag is asserted after the tamper event on the pin, with the latency provided below:

- 3 ck_apre cycles when TAMPFLT differs from 0x0 (Level detection with filtering)
- 3 ck_apre cycles when TAMPTS=1 (Timestamp on tamper event)
- No latency when TAMPFLT=0x0 (Edge detection) and TAMPTS=0

A new tamper occurring on the same pin during this period and as long as TAMPxF is set cannot be detected.

When TAMPxMF is set:

A new tamper occurring on the same pin cannot be detected during the latency described above and 2.5 ck_rtc additional cycles.

By setting the TAMPIE bit in the RTC_TAMPCR register, an interrupt is generated when a tamper detection event occurs (when TAMPxF is set). Setting TAMPIE is not allowed when one or more TAMPxMF is set.

When TAMPIE is cleared, each tamper pin event interrupt can be individually enabled by setting the corresponding TAMPxIE bit in the RTC_TAMPCR register. Setting TAMPxIE is not allowed when the corresponding TAMPxMF is set.

Trigger output generation on tamper event

The tamper event detection can be used as trigger input by the low-power timers.

When TAMPxMF bit in cleared in RTC_TAMPCR register, the TAMPxF flag must be cleared by software in order to allow a new tamper detection on the same pin.

When TAMPxMF bit is set, the TAMPxF flag is masked, and kept cleared in RTC_ISR register. This configuration allows to trig automatically the low-power timers in Stop mode, without requiring the system wakeup to perform the TAMPxF clearing. In this case, the backup registers are not cleared.

Timestamp on tamper event

With TAMPTS set to ‘1’, any tamper event causes a timestamp to occur. In this case, either the TSF bit or the TSOVF bit are set in RTC_ISR, in the same manner as if a normal timestamp event occurs. The affected tamper flag register TAMPxF is set at the same time that TSF or TSOVF is set.

Edge detection on tamper inputs

If the TAMPFLT bits are “00”, the RTC_TAMPx pins generate tamper detection events when either a rising edge or a falling edge is observed depending on the corresponding TAMPxTRG bit. The internal pull-up resistors on the RTC_TAMPx inputs are deactivated when edge detection is selected.

Caution: When using the edge detection, it is recommended to check by software the tamper pin level just after enabling the tamper detection (by reading the GPIO registers), and before writing sensitive values in the backup registers, to ensure that an active edge did not occur before enabling the tamper event detection.
When TAMPFLT="00" and TAMPxTRG = 0 (rising edge detection), a tamper event may be detected by hardware if the tamper input is already at high level before enabling the tamper detection.

After a tamper event has been detected and cleared, the RTC_TAMPx should be disabled and then re-enabled (TAMPxE set to 1) before re-programming the backup registers (RTC_BKPxR). This prevents the application from writing to the backup registers while the RTC_TAMPx input value still indicates a tamper detection. This is equivalent to a level detection on the RTC_TAMPx input.

Note: Tamper detection is still active when V_{DD} power is switched off. To avoid unwanted resetting of the backup registers, the pin to which the RTC_TAMPx is mapped should be externally tied to the correct level.

Level detection with filtering on RTC_TAMPx inputs

Level detection with filtering is performed by setting TAMPFLT to a non-zero value. A tamper detection event is generated when either 2, 4, or 8 (depending on TAMPFLT) consecutive samples are observed at the level designated by the TAMPxTRG bits.

The RTC_TAMPx inputs are precharged through the I/O internal pull-up resistance before its state is sampled, unless disabled by setting TAMPPUDIS to 1,The duration of the precharge is determined by the TAMPPRCH bits, allowing for larger capacitances on the RTC_TAMPx inputs.

The trade-off between tamper detection latency and power consumption through the pull-up can be optimized by using TAMPFREQ to determine the frequency of the sampling for level detection.

Note: Refer to the datasheets for the electrical characteristics of the pull-up resistors.

38.3.15 Calibration clock output

When the COE bit is set to 1 in the RTC_CR register, a reference clock is provided on the RTC_CALIB device output.

If the COSEL bit in the RTC_CR register is reset and PREDIV_A = 0x7F, the RTC_CALIB frequency is $f_{RTCCLK/64}$. This corresponds to a calibration output at 512 Hz for an RTCCLK frequency at 32.768 kHz. The RTC_CALIB duty cycle is irregular: there is a light jitter on falling edges. It is therefore recommended to use rising edges.

When COSEL is set and “PREDIV_S+1” is a non-zero multiple of 256 (i.e: PREDIV_S[7:0] = 0xFF), the RTC_CALIB frequency is $f_{RTCCLK}/(256 * (PREDIV_A+1))$. This corresponds to a calibration output at 1 Hz for prescaler default values (PREDIV_A = Ox7F, PREDIV_S = 0xFF), with an RTCCLK frequency at 32.768 kHz. The 1 Hz output is affected when a shift operation is on going and may toggle during the shift operation (SHPF=1).

Note: When the RTC_CALIB or RTC_ALARM output is selected, the RTC_OUT pin is automatically configured as output.

When COSEL bit is cleared, the RTC_CALIB output is the output of the 6th stage of the asynchronous prescaler.

When COSEL bit is set, the RTC_CALIB output is the output of the 8th stage of the synchronous prescaler.

38.3.16 Alarm output

The OSEL[1:0] control bits in the RTC_CR register are used to activate the alarm output RTC_ALARM, and to select the function which is output. These functions reflect the contents of the corresponding flags in the RTC_ISR register.

The polarity of the output is determined by the POL control bit in RTC_CR so that the opposite of the selected flag bit is output when POL is set to 1.

Alarm output

The RTC_ALARM pin can be configured in output open drain or output push-pull using the control bit RTC_ALARM_TYPE in the RTC_OR register.

Note: Once the RTC_ALARM output is enabled, it has priority over RTC_CALIB (COE bit is don't care and must be kept cleared).

When the RTC_CALIB or RTC_ALARM output is selected, the RTC_OUT *pin is automatically configured as output.*

38.4 RTC low-power modes

Table 224. Effect of low-power modes on RTC

Mode	Description
Sleep	No effect RTC interrupts cause the device to exit the Sleep mode.
Low-power run	No effect.
Low-power sleep	No effect. RTC interrupts cause the device to exit the Low-power sleep mode.
Stop 0	The RTC remains active when the RTC clock source is LSE or LSI. RTC alarm, RTC tamper event, RTC timestamp event, and RTC Wakeup cause the device to exit the Stop mode.
Stop 1	
Stop 2	
Standby	The RTC remains active when the RTC clock source is LSE or LSI. RTC alarm, RTC tamper event, RTC timestamp event, and RTC Wakeup cause the device to exit the Standby mode.
Shutdown	The RTC remains active when the RTC clock source is LSE. RTC alarm, RTC tamper event, RTC timestamp event, and RTC Wakeup cause the device to exit the Shutdown mode.

38.5 RTC interrupts

All RTC interrupts are connected to the EXTI controller. Refer to *Section 14: Extended interrupts and events controller (EXTI)*.

To enable the RTC Alarm interrupt, the following sequence is required:

1. Configure and enable the EXTI line corresponding to the RTC Alarm event in interrupt mode and select the rising edge sensitivity.
2. Configure and enable the RTC_ALARM IRQ channel in the NVIC.
3. Configure the RTC to generate RTC alarms.

To enable the RTC Tamper interrupt, the following sequence is required:

1. Configure and enable the EXTI line corresponding to the RTC Tamper event in interrupt mode and select the rising edge sensitivity.
2. Configure and Enable the RTC_TAMP_STAMP IRQ channel in the NVIC.
3. Configure the RTC to detect the RTC tamper event.

To enable the RTC TimeStamp interrupt, the following sequence is required:

1. Configure and enable the EXTI line corresponding to the RTC TimeStamp event in interrupt mode and select the rising edge sensitivity.
2. Configure and Enable the RTC_TAMP_STAMP IRQ channel in the NVIC.
3. Configure the RTC to detect the RTC time-stamp event.

To enable the Wakeup timer interrupt, the following sequence is required:

1. Configure and enable the EXTI line corresponding to the Wakeup timer even in interrupt mode and select the rising edge sensitivity.
2. Configure and Enable the RTC_WKUP IRQ channel in the NVIC.
3. Configure the RTC to detect the RTC Wakeup timer event.

Table 225. Interrupt control bits

Interrupt event	Event flag	Enable control bit	Exit from Sleep mode	Exit from Stop mode	Exit from Standby mode
Alarm A	ALRAF	ALRAIE	yes	yes(1)	yes(1)
Alarm B	ALRBF	ALRBIE	yes	yes(1)	yes(1)
RTC_TS input (timestamp)	TSF	TSIE	yes	yes(1)	yes(1)
RTC_TAMP1 input detection	TAMP1F	TAMPIE	yes	yes(1)	yes(1)
RTC_TAMP2 input detection	TAMP2F	TAMPIE	yes	yes(1)	yes(1)
RTC_TAMP3 input detection	TAMP3F	TAMPIE	yes	yes(1)	yes(1)
Wakeup timer interrupt	WUTF	WUTIE	yes	yes(1)	yes(1)

1. Wakeup from STOP and Standby modes is possible only when the RTC clock source is LSE or LSI.

38.6 RTC registers

Refer to *Section 1.2 on page 69* of the reference manual for a list of abbreviations used in register descriptions.

The peripheral registers can be accessed by words (32-bit).

38.6.1 RTC time register (RTC_TR)

The RTC_TR is the calendar time shadow register. This register must be written in initialization mode only. Refer to *Calendar initialization and configuration on page 1232* and *Reading the calendar on page 1233*.

This register is write protected. The write access procedure is described in *RTC register write protection on page 1231*.

Address offset: 0x00

Backup domain reset value: 0x0000 0000

System reset: 0x0000 0000 when BYPSHAD = 0. Not affected when BYPSHAD = 1.

31	30	29	28	27	26	25	24	23	22	21	20	19	18	17	16
Res.	Res.	Res.	Res.	Res.	Res.	Res.	Res.	Res.	PM	HT[1:0]		HU[3:0]			
									rw	rw	rw	rw	rw	rw	rw

15	14	13	12	11	10	9	8	7	6	5	4	3	2	1	0
Res.	MNT[2:0]			MNU[3:0]				Res.	ST[2:0]			SU[3:0]			
	rw	rw	rw	rw	rw	rw	rw		rw	rw	rw	rw	rw	rw	rw

Bits 31:23 Reserved, must be kept at reset value.

Bit 22 **PM**: AM/PM notation
0: AM or 24-hour format
1: PM

Bits 21:20 **HT[1:0]**: Hour tens in BCD format

Bits 19:16 **HU[3:0]**: Hour units in BCD format

Bit 15 Reserved, must be kept at reset value.

Bits 14:12 **MNT[2:0]**: Minute tens in BCD format

Bits 11:8 **MNU[3:0]**: Minute units in BCD format

Bit 7 Reserved, must be kept at reset value.

Bits 6:4 **ST[2:0]**: Second tens in BCD format

Bits 3:0 **SU[3:0]**: Second units in BCD format

38.6.2 RTC date register (RTC_DR)

The RTC_DR is the calendar date shadow register. This register must be written in initialization mode only. Refer to *Calendar initialization and configuration on page 1232* and *Reading the calendar on page 1233*.

This register is write protected. The write access procedure is described in *RTC register write protection on page 1231*.

Address offset: 0x04

Backup domain reset value: 0x0000 2101

System reset: 0x0000 2101 when BYPSHAD = 0. Not affected when BYPSHAD = 1.

31	30	29	28	27	26	25	24	23	22	21	20	19	18	17	16
Res.	Res.	Res.	Res.	Res.	Res.	Res.	Res.	YT[3:0]				YU[3:0]			
								rw	rw	rw	rw	rw	rw	rw	rw

15	14	13	12	11	10	9	8	7	6	5	4	3	2	1	0
WDU[2:0]			MT	MU[3:0]				Res.	Res.	DT[1:0]		DU[3:0]			
rw	rw	rw	rw	rw	rw	rw	rw			rw	rw	rw	rw	rw	rw

Bits 31:24 Reserved, must be kept at reset value.

Bits 23:20 **YT[3:0]**: Year tens in BCD format

Bits 19:16 **YU[3:0]**: Year units in BCD format

Bits 15:13 **WDU[2:0]**: Week day units
000: forbidden
001: Monday
...
111: Sunday

Bit 12 **MT**: Month tens in BCD format

Bits 11:8 **MU[3:0]**: Month units in BCD format

Bits 7:6 Reserved, must be kept at reset value.

Bits 5:4 **DT[1:0]**: Date tens in BCD format

Bits 3:0 **DU[3:0]**: Date units in BCD format

38.6.3 RTC control register (RTC_CR)

Address offset: 0x08

Backup domain reset value: 0x0000 0000

System reset: not affected

31	30	29	28	27	26	25	24	23	22	21	20	19	18	17	16
Res.	Res.	Res.	Res.	Res.	Res.	Res.	ITSE	COE	OSEL[1:0]		POL	COSEL	BKP	SUB1H	ADD1H
							rw	rw	rw	rw	rw	rw	rw	w	w

15	14	13	12	11	10	9	8	7	6	5	4	3	2	1	0
TSIE	WUTIE	ALRBIE	ALRAIE	TSE	WUTE	ALRBE	ALRAE	Res.	FMT	BYPS HAD	REFCKON	TSEDGE	WUCKSEL[2:0]		
rw	rw	rw	rw	rw	rw	rw	rw		rw	rw	rw	rw	rw	rw	rw

Bits 31:25 Reserved, must be kept at reset value.

Bit 24 **ITSE**: timestamp on internal event enable

0: internal event timestamp disabled
1: internal event timestamp enabled

Bit 23 **COE**: Calibration output enable

This bit enables the RTC_CALIB output

0: Calibration output disabled
1: Calibration output enabled

Bits 22:21 **OSEL[1:0]**: Output selection

These bits are used to select the flag to be routed to RTC_ALARM output

00: Output disabled
01: Alarm A output enabled
10: Alarm B output enabled
11: Wakeup output enabled

Bit 20 **POL**: Output polarity

This bit is used to configure the polarity of RTC_ALARM output

0: The pin is high when ALRAF/ALRBF/WUTF is asserted (depending on OSEL[1:0])
1: The pin is low when ALRAF/ALRBF/WUTF is asserted (depending on OSEL[1:0]).

Bit 19 **COSEL**: Calibration output selection

When COE=1, this bit selects which signal is output on RTC_CALIB.

0: Calibration output is 512 Hz (with default prescaler setting)
1: Calibration output is 1 Hz (with default prescaler setting)

These frequencies are valid for RTCCLK at 32.768 kHz and prescalers at their default values (PREDIV_A=127 and PREDIV_S=255). Refer to *Section 38.3.15: Calibration clock output*

Bit 18 **BKP**: Backup

This bit can be written by the user to memorize whether the daylight saving time change has been performed or not.

Bit 17 **SUB1H**: Subtract 1 hour (winter time change)

When this bit is set, 1 hour is subtracted to the calendar time if the current hour is not 0. This bit is always read as 0.

Setting this bit has no effect when current hour is 0.

0: No effect
1: Subtracts 1 hour to the current time. This can be used for winter time change outside initialization mode.

Bit 16 **ADD1H**: Add 1 hour (summer time change)

When this bit is set, 1 hour is added to the calendar time. This bit is always read as 0.

0: No effect
1: Adds 1 hour to the current time. This can be used for summer time change outside initialization mode.

Bit 15 **TSIE**: Time-stamp interrupt enable

0: Time-stamp Interrupt disable
1: Time-stamp Interrupt enable

Bit 14 **WUTIE**: Wakeup timer interrupt enable

0: Wakeup timer interrupt disabled
1: Wakeup timer interrupt enabled

Bit 13 **ALRBIE**: *Alarm B interrupt enable*

0: Alarm B Interrupt disable
1: Alarm B Interrupt enable

Bit 12 **ALRAIE**: Alarm A interrupt enable

0: Alarm A interrupt disabled
1: Alarm A interrupt enabled

Bit 11 **TSE**: timestamp enable

0: timestamp disable
1: timestamp enable

Bit 10 **WUTE**: Wakeup timer enable

0: Wakeup timer disabled
1: Wakeup timer enabled

Note: When the wakeup timer is disabled, wait for WUTWF=1 before enabling it again.

Bit 9 **ALRBE**: *Alarm B enable*

0: Alarm B disabled
1: Alarm B enabled

Bit 8 **ALRAE:** Alarm A enable

0: Alarm A disabled
1: Alarm A enabled

Bit 7 Reserved, must be kept at reset value.

Bit 6 **FMT**: Hour format

0: 24 hour/day format
1: AM/PM hour format

Bit 5 **BYPSHAD**: Bypass the shadow registers

0: Calendar values (when reading from RTC_SSR, RTC_TR, and RTC_DR) are taken from the shadow registers, which are updated once every two RTCCLK cycles.

1: Calendar values (when reading from RTC_SSR, RTC_TR, and RTC_DR) are taken directly from the calendar counters.

Note: If the frequency of the APB clock is less than seven times the frequency of RTCCLK, BYPSHAD must be set to '1'.

Bit 4 **REFCKON**: RTC_REFIN reference clock detection enable (50 or 60 Hz)

0: RTC_REFIN detection disabled
1: RTC_REFIN detection enabled

Note: PREDIV_S must be 0x00FF.

Bit 3 **TSEDGE**: Time-stamp event active edge

0: RTC_TS input rising edge generates a time-stamp event
1: RTC_TS input falling edge generates a time-stamp event
TSE must be reset when TSEDGE is changed to avoid unwanted TSF setting.

Bits 2:0 **WUCKSEL[2:0]**: Wakeup clock selection

000: RTC/16 clock is selected
001: RTC/8 clock is selected
010: RTC/4 clock is selected
011: RTC/2 clock is selected
10x: ck_spre (usually 1 Hz) clock is selected
11x: ck_spre (usually 1 Hz) clock is selected and 2^{16} is added to the WUT counter value (see note below)

Note: Bits 7, 6 and 4 of this register can be written in initialization mode only (RTC_ISR/INITF = 1).

WUT = Wakeup unit counter value. WUT = (0x0000 to 0xFFFF) + 0x10000 added when WUCKSEL[2:1 = 11].

Bits 2 to 0 of this register can be written only when RTC_CR WUTE bit = 0 and RTC_ISR WUTWF bit = 1.

It is recommended not to change the hour during the calendar hour increment as it could mask the incrementation of the calendar hour.

ADD1H and SUB1H changes are effective in the next second.

This register is write protected. The write access procedure is described in RTC register write protection on page 1231.

Caution: TSE must be reset when TSEDGE is changed to avoid spuriously setting of TSF.

38.6.4 RTC initialization and status register (RTC_ISR)

This register is write protected (except for RTC_ISR[13:8] bits). The write access procedure is described in *RTC register write protection on page 1231*.

Address offset: 0x0C

Backup domain reset value: 0x0000 0007

System reset: not affected except INIT, INITF, and RSF bits which are cleared to ‘0’

31	30	29	28	27	26	25	24	23	22	21	20	19	18	17	16
Res.	Res.	Res.	Res.	Res.	Res.	Res.	Res.	Res.	Res.	Res.	Res.	Res.	Res.	ITSF	RECALPF
														rc_w0	r
15	14	13	12	11	10	9	8	7	6	5	4	3	2	1	0
TAMP3F	TAMP2F	TAMP1F	TSOVF	TSF	WUTF	ALRBF	ALRAF	INIT	INITF	RSF	INITS	SHPF	WUTWF	ALRBWF	ALRAWF
rc_w0	rc_w0	rc_w0	rc_w0	rc_w0	rc_w0	rc_w0	rc_w0	rw	r	rc_w0	r	r	r	r	r

Bits 31:18 Reserved, must be kept at reset value.

Bit 17 **ITSF**: Internal tTime-stamp flag

This flag is set by hardware when a time-stamp on the internal event occurs.

This flag is cleared by software by writing 0, and must be cleared together with TSF bit by writing 0 in both bits.

Bit 16 **RECALPF**: Recalibration pending Flag

The RECALPF status flag is automatically set to ‘1’ when software writes to the RTC_CALR register, indicating that the RTC_CALR register is blocked. When the new calibration settings are taken into account, this bit returns to ‘0’. Refer to *Re-calibration on-the-fly*.

Bit 15 **TAMP3F**: RTC_TAMP3 detection flag

This flag is set by hardware when a tamper detection event is detected on the RTC_TAMP3 input.

It is cleared by software writing 0

Bit 14 **TAMP2F**: RTC_TAMP2 detection flag

This flag is set by hardware when a tamper detection event is detected on the RTC_TAMP2 input.

It is cleared by software writing 0

Bit 13 **TAMP1F**: RTC_TAMP1 detection flag

This flag is set by hardware when a tamper detection event is detected on the RTC_TAMP1 input.

It is cleared by software writing 0

Bit 12 **TSOVF**: Time-stamp overflow flag

This flag is set by hardware when a time-stamp event occurs while TSF is already set.

This flag is cleared by software by writing 0. It is recommended to check and then clear TSOVF only after clearing the TSF bit. Otherwise, an overflow might not be noticed if a time-stamp event occurs immediately before the TSF bit is cleared.

Bit 11 **TSF**: Time-stamp flag

This flag is set by hardware when a time-stamp event occurs.

This flag is cleared by software by writing 0. If ITSF flag is set, TSF must be cleared together with ITSF by writing 0 in both bits.

Bit 10 **WUTF**: Wakeup timer flag

This flag is set by hardware when the wakeup auto-reload counter reaches 0.

This flag is cleared by software by writing 0.

This flag must be cleared by software at least 1.5 RTCCLK periods before WUTF is set to 1 again.

Bit 9 **ALRBF**: Alarm B flag

This flag is set by hardware when the time/date registers (RTC_TR and RTC_DR) match the Alarm B register (RTC_ALRMBR).

This flag is cleared by software by writing 0.

Bit 8 **ALRAF**: Alarm A flag

This flag is set by hardware when the time/date registers (RTC_TR and RTC_DR) match the Alarm A register (RTC_ALRMAR).

This flag is cleared by software by writing 0.

Bit 7 **INIT**: Initialization mode

0: Free running mode

1: Initialization mode used to program time and date register (RTC_TR and RTC_DR), and prescaler register (RTC_PRER). Counters are stopped and start counting from the new value when INIT is reset.

Bit 6 **INITF**: Initialization flag

When this bit is set to 1, the RTC is in initialization state, and the time, date and prescaler registers can be updated.

0: Calendar registers update is not allowed

1: Calendar registers update is allowed

Bit 5 **RSF**: Registers synchronization flag

This bit is set by hardware each time the calendar registers are copied into the shadow registers (RTC_SSRx, RTC_TRx and RTC_DRx). This bit is cleared by hardware in initialization mode, while a shift operation is pending (SHPF=1), or when in bypass shadow register mode (BYPSHAD=1). This bit can also be cleared by software.

It is cleared either by software or by hardware in initialization mode.

0: Calendar shadow registers not yet synchronized

1: Calendar shadow registers synchronized

Bit 4 **INITS**: Initialization status flag

This bit is set by hardware when the calendar year field is different from 0 (Backup domain reset state).

0: Calendar has not been initialized

1: Calendar has been initialized

Bit 3 **SHPF**: Shift operation pending

0: No shift operation is pending

1: A shift operation is pending

This flag is set by hardware as soon as a shift operation is initiated by a write to the RTC_SHIFTR register. It is cleared by hardware when the corresponding shift operation has been executed. Writing to the SHPF bit has no effect.

Bit 2 **WUTWF**: Wakeup timer write flag

This bit is set by hardware up to 2 RTCCLK cycles after the WUTE bit has been set to 0 in RTC_CR, and is cleared up to 2 RTCCLK cycles after the WUTE bit has been set to 1. The wakeup timer values can be changed when WUTE bit is cleared and WUTWF is set.

0: Wakeup timer configuration update not allowed

1: Wakeup timer configuration update allowed

Bit 1 **ALRBWF**: Alarm B write flag

This bit is set by hardware when Alarm B values can be changed, after the ALRBE bit has been set to 0 in RTC_CR.

It is cleared by hardware in initialization mode.

0: Alarm B update not allowed

1: Alarm B update allowed

Bit 0 **ALRAWF**: Alarm A write flag

This bit is set by hardware when Alarm A values can be changed, after the ALRAE bit has been set to 0 in RTC_CR.

It is cleared by hardware in initialization mode.

0: Alarm A update not allowed

1: Alarm A update allowed

Note: The bits ALRAF, ALRBF, WUTF and TSF are cleared 2 APB clock cycles after programming them to 0.

38.6.5 RTC prescaler register (RTC_PRER)

This register must be written in initialization mode only. The initialization must be performed in two separate write accesses. Refer to *Calendar initialization and configuration on page 1232*.

This register is write protected. The write access procedure is described in *RTC register write protection on page 1231*.

Address offset: 0x10

Backup domain reset value: 0x007F 00FF

System reset: not affected

31	30	29	28	27	26	25	24	23	22	21	20	19	18	17	16
Res.	Res.	Res.	Res.	Res.	Res.	Res.	Res.	Res.	PREDIV_A[6:0]						
									rw	rw	rw	rw	rw	rw	rw

15	14	13	12	11	10	9	8	7	6	5	4	3	2	1	0
Res.	PREDIV_S[14:0]														
	rw	rw	rw	rw	rw	rw	rw	rw	rw	rw	rw	rw	rw	rw	rw

Bits 31:23 Reserved, must be kept at reset value.

Bits 22:16 **PREDIV_A[6:0]**: Asynchronous prescaler factor
This is the asynchronous division factor:
ck_apre frequency = RTCCLK frequency/(PREDIV_A+1)

Bit 15 Reserved, must be kept at reset value.

Bits 14:0 **PREDIV_S[14:0]**: Synchronous prescaler factor
This is the synchronous division factor:
ck_spre frequency = ck_apre frequency/(PREDIV_S+1)

38.6.6 RTC wakeup timer register (RTC_WUTR)

This register can be written only when WUTWF is set to 1 in RTC_ISR.

This register is write protected. The write access procedure is described in *RTC register write protection on page 1231*.

Address offset: 0x14

Backup domain reset value: 0x0000 FFFF

System reset: not affected

31	30	29	28	27	26	25	24	23	22	21	20	19	18	17	16
Res.	Res.	Res.	Res.	Res.	Res.	Res.	Res.	Res.	Res.	Res.	Res.	Res.	Res.	Res.	Res.

15	14	13	12	11	10	9	8	7	6	5	4	3	2	1	0
WUT[15:0]															
rw	rw	rw	rw	rw	rw	rw	rw	rw	rw	rw	rw	rw	rw	rw	rw

Bits 31:16 Reserved, must be kept at reset value.

Bits 15:0 **WUT[15:0]**: Wakeup auto-reload value bits

When the wakeup timer is enabled (WUTE set to 1), the WUTF flag is set every (WUT[15:0] + 1) ck_wut cycles. The ck_wut period is selected through WUCKSEL[2:0] bits of the RTC_CR register

When WUCKSEL[2] = 1, the wakeup timer becomes 17-bits and WUCKSEL[1] effectively becomes WUT[16] the most-significant bit to be reloaded into the timer.

The first assertion of WUTF occurs (WUT+1) ck_wut cycles after WUTE is set. Setting WUT[15:0] to 0x0000 with WUCKSEL[2:0] =011 (RTCCLK/2) is forbidden.

38.6.7 RTC alarm A register (RTC_ALRMAR)

This register can be written only when ALRAWF is set to 1 in RTC_ISR, or in initialization mode.

This register is write protected. The write access procedure is described in *RTC register write protection on page 1231*.

Address offset: 0x1C

Backup domain reset value: 0x0000 0000

System reset: not affected

31	30	29	28	27	26	25	24	23	22	21	20	19	18	17	16
MSK4	WDSEL	DT[1:0]		DU[3:0]				MSK3	PM	HT[1:0]		HU[3:0]			
rw	rw	rw	rw	rw	rw	rw	rw	rw	rw	rw	rw	rw	rw	rw	rw
15	14	13	12	11	10	9	8	7	6	5	4	3	2	1	0
MSK2	MNT[2:0]			MNU[3:0]				MSK1	ST[2:0]			SU[3:0]			
rw	rw	rw	rw	rw	rw	rw	rw	rw	rw	rw	rw	rw	rw	rw	rw

Bit 31 **MSK4**: Alarm A date mask
0: Alarm A set if the date/day match
1: Date/day don't care in Alarm A comparison

Bit 30 **WDSEL**: Week day selection
0: DU[3:0] represents the date units
1: DU[3:0] represents the week day. DT[1:0] is don't care.

Bits 29:28 **DT[1:0]**: Date tens in BCD format.

Bits 27:24 **DU[3:0]**: Date units or day in BCD format.

Bit 23 **MSK3**: Alarm A hours mask
0: Alarm A set if the hours match
1: Hours don't care in Alarm A comparison

Bit 22 **PM:** AM/PM notation
0: AM or 24-hour format
1: PM

Bits 21:20 **HT[1:0]**: Hour tens in BCD format.

Bits 19:16 **HU[3:0]**: Hour units in BCD format.

Bit 15 **MSK2**: Alarm A minutes mask
0: Alarm A set if the minutes match
1: Minutes don't care in Alarm A comparison

Bits 14:12 **MNT[2:0]**: Minute tens in BCD format.

Bits 11:8 **MNU[3:0]**: Minute units in BCD format.

Bit 7 **MSK1**: Alarm A seconds mask
0: Alarm A set if the seconds match
1: Seconds don't care in Alarm A comparison

Bits 6:4 **ST[2:0]**: Second tens in BCD format.

Bits 3:0 **SU[3:0]**: Second units in BCD format.

38.6.8 RTC alarm B register (RTC_ALRMBR)

This register can be written only when ALRBWF is set to 1 in RTC_ISR, or in initialization mode.

This register is write protected. The write access procedure is described in *RTC register write protection on page 1231*.

Address offset: 0x20

Backup domain reset value: 0x0000 0000

System reset: not affected

31	30	29	28	27	26	25	24	23	22	21	20	19	18	17	16
MSK4	WDSEL	DT[1:0]		DU[3:0]				MSK3	PM	HT[1:0]		HU[3:0]			
rw	rw	rw	rw	rw	rw	rw	rw	rw	rw	rw	rw	rw	rw	rw	rw
15	14	13	12	11	10	9	8	7	6	5	4	3	2	1	0
MSK2	MNT[2:0]			MNU[3:0]				MSK1	ST[2:0]			SU[3:0]			
rw	rw	rw	rw	rw	rw	rw	rw	rw	rw	rw	rw	rw	rw	rw	rw

Bit 31 **MSK4**: Alarm B date mask
0: Alarm B set if the date and day match
1: Date and day don’t care in Alarm B comparison

Bit 30 **WDSEL**: Week day selection
0: DU[3:0] represents the date units
1: DU[3:0] represents the week day. DT[1:0] is don’t care.

Bits 29:28 **DT[1:0]**: Date tens in BCD format

Bits 27:24 **DU[3:0]**: Date units or day in BCD format

Bit 23 **MSK3**: Alarm B hours mask
0: Alarm B set if the hours match
1: Hours don’t care in Alarm B comparison

Bit 22 **PM:** AM/PM notation
0: AM or 24-hour format
1: PM

Bits 21:20 **HT[1:0]**: Hour tens in BCD format

Bits 19:16 **HU[3:0]**: Hour units in BCD format

Bit 15 **MSK2**: Alarm B minutes mask
0: Alarm B set if the minutes match
1: Minutes don’t care in Alarm B comparison

Bits 14:12 **MNT[2:0]**: Minute tens in BCD format

Bits 11:8 **MNU[3:0]**: Minute units in BCD format

Bit 7 **MSK1**: Alarm B seconds mask
0: Alarm B set if the seconds match
1: Seconds don’t care in Alarm B comparison

Bits 6:4 **ST[2:0]**: Second tens in BCD format

Bits 3:0 **SU[3:0]**: Second units in BCD format

38.6.9 RTC write protection register (RTC_WPR)

Address offset: 0x24

Reset value: 0x0000 0000

31	30	29	28	27	26	25	24	23	22	21	20	19	18	17	16
Res.	Res.	Res.	Res.	Res.	Res.	Res.	Res.	Res.	Res.	Res.	Res.	Res.	Res.	Res.	Res.

15	14	13	12	11	10	9	8	7	6	5	4	3	2	1	0
Res.	Res.	Res.	Res.	Res.	Res.	Res.	Res.	KEY[7:0]							
								w	w	w	w	w	w	w	w

Bits 31:8 Reserved, must be kept at reset value.

Bits 7:0 **KEY[7:0]**: Write protection key

This byte is written by software.

Reading this byte always returns 0x00.

Refer to *RTC register write protection* for a description of how to unlock RTC register write protection.

38.6.10 RTC sub second register (RTC_SSR)

Address offset: 0x28

Backup domain reset value: 0x0000 0000

System reset: 0x0000 0000 when BYPSHAD = 0. Not affected when BYPSHAD = 1.

31	30	29	28	27	26	25	24	23	22	21	20	19	18	17	16
Res.	Res.	Res.	Res.	Res.	Res.	Res.	Res.	Res.	Res.	Res.	Res.	Res.	Res.	Res.	Res.

15	14	13	12	11	10	9	8	7	6	5	4	3	2	1	0
SS[15:0]															
r	r	r	r	r	r	r	r	r	r	r	r	r	r	r	r

Bits 31:16 Reserved, must be kept at reset value.

Bits 15:0 **SS[15:0]**: Sub second value

SS[15:0] is the value in the synchronous prescaler counter. The fraction of a second is given by the formula below:

Second fraction = (PREDIV_S - SS) / (PREDIV_S + 1)

Note: SS can be larger than PREDIV_S only after a shift operation. In that case, the correct time/date is one second less than as indicated by RTC_TR/RTC_DR.

38.6.11 RTC shift control register (RTC_SHIFTR)

This register is write protected. The write access procedure is described in *RTC register write protection on page 1231.*

Address offset: 0x2C

Backup domain reset value: 0x0000 0000

System reset: not affected

31	30	29	28	27	26	25	24	23	22	21	20	19	18	17	16
ADD1S	Res.	Res.	Res.	Res.	Res.	Res.	Res.	Res.	Res.	Res.	Res.	Res.	Res.	Res.	Res.
w															

15	14	13	12	11	10	9	8	7	6	5	4	3	2	1	0
Res.	SUBFS[14:0]														
	w	w	w	w	w	w	w	w	w	w	w	w	w	w	w

Bit 31 **ADD1S**: Add one second

0: No effect

1: Add one second to the clock/calendar

This bit is write only and is always read as zero. Writing to this bit has no effect when a shift operation is pending (when SHPF=1, in RTC_ISR).

This function is intended to be used with SUBFS (see description below) in order to effectively add a fraction of a second to the clock in an atomic operation.

Bits 30:15 Reserved, must be kept at reset value.

Bits 14:0 **SUBFS[14:0]**: Subtract a fraction of a second

These bits are write only and is always read as zero. Writing to this bit has no effect when a shift operation is pending (when SHPF=1, in RTC_ISR).

The value which is written to SUBFS is added to the synchronous prescaler counter. Since this counter counts down, this operation effectively subtracts from (delays) the clock by:

Delay (seconds) = SUBFS / (PREDIV_S + 1)

A fraction of a second can effectively be added to the clock (advancing the clock) when the ADD1S function is used in conjunction with SUBFS, effectively advancing the clock by:

Advance (seconds) = (1 - (SUBFS / (PREDIV_S + 1))).

Note: Writing to SUBFS causes RSF to be cleared. Software can then wait until RSF=1 to be sure that the shadow registers have been updated with the shifted time.

38.6.12 RTC timestamp time register (RTC_TSTR)

The content of this register is valid only when TSF is set to 1 in RTC_ISR. It is cleared when TSF bit is reset.

Address offset: 0x30

Backup domain reset value: 0x0000 0000

System reset: not affected

31	30	29	28	27	26	25	24	23	22	21	20	19	18	17	16
Res.	Res.	Res.	Res.	Res.	Res.	Res.	Res.	Res.	PM	HT[1:0]		HU[3:0]			
									r	r	r	r	r	r	r

15	14	13	12	11	10	9	8	7	6	5	4	3	2	1	0
Res.	MNT[2:0]			MNU[3:0]				Res.	ST[2:0]			SU[3:0]			
	r	r	r	r	r	r	r		r	r	r	r	r	r	r

Bits 31:23 Reserved, must be kept at reset value.

Bit 22 **PM:** AM/PM notation
0: AM or 24-hour format
1: PM

Bits 21:20 **HT[1:0]**: Hour tens in BCD format.

Bits 19:16 **HU[3:0]**: Hour units in BCD format.

Bit 15 Reserved, must be kept at reset value.

Bits 14:12 **MNT[2:0]**: Minute tens in BCD format.

Bits 11:8 **MNU[3:0]**: Minute units in BCD format.

Bit 7 Reserved, must be kept at reset value.

Bits 6:4 **ST[2:0]**: Second tens in BCD format.

Bits 3:0 **SU[3:0]**: Second units in BCD format.

38.6.13 RTC timestamp date register (RTC_TSDR)

The content of this register is valid only when TSF is set to 1 in RTC_ISR. It is cleared when TSF bit is reset.

Address offset: 0x34

Backup domain reset value: 0x0000 0000

System reset: not affected

31	30	29	28	27	26	25	24	23	22	21	20	19	18	17	16
Res.	Res.	Res.	Res.	Res.	Res.	Res.	Res.	Res.	Res.	Res.	Res.	Res.	Res.	Res.	Res.

15	14	13	12	11	10	9	8	7	6	5	4	3	2	1	0
WDU[2:0]			MT	MU[3:0]				Res.	Res.	DT[1:0]		DU[3:0]			
r	r	r	r	r	r	r	r			r	r	r	r	r	r

Bits 31:16 Reserved, must be kept at reset value.

Bits 15:13 **WDU[2:0]**: Week day units

Bit 12 **MT**: Month tens in BCD format

Bits 11:8 **MU[3:0]**: Month units in BCD format

Bits 7:6 Reserved, must be kept at reset value.

Bits 5:4 **DT[1:0]**: Date tens in BCD format

Bits 3:0 **DU[3:0]**: Date units in BCD format

38.6.14 RTC time-stamp sub second register (RTC_TSSSR)

The content of this register is valid only when RTC_ISR/TSF is set. It is cleared when the RTC_ISR/TSF bit is reset.

Address offset: 0x38

Backup domain reset value: 0x0000 0000

System reset: not affected

31	30	29	28	27	26	25	24	23	22	21	20	19	18	17	16
Res.	Res.	Res.	Res.	Res.	Res.	Res.	Res.	Res.	Res.	Res.	Res.	Res.	Res.	Res.	Res.

15	14	13	12	11	10	9	8	7	6	5	4	3	2	1	0
SS[15:0]															
r	r	r	r	r	r	r	r	r	r	r	r	r	r	r	r

Bits 31:16 Reserved, must be kept at reset value.

Bits 15:0 **SS[15:0]**: Sub second value

SS[15:0] is the value of the synchronous prescaler counter when the timestamp event occurred.

38.6.15 RTC calibration register (RTC_CALR)

This register is write protected. The write access procedure is described in *RTC register write protection on page 1231.*

Address offset: 0x3C

Backup domain reset value: 0x0000 0000

System reset: not affected

31	30	29	28	27	26	25	24	23	22	21	20	19	18	17	16
Res.	Res.	Res.	Res.	Res.	Res.	Res.	Res.	Res.	Res.	Res.	Res.	Res.	Res.	Res.	Res.

15	14	13	12	11	10	9	8	7	6	5	4	3	2	1	0
CALP	CALW8	CALW 16	Res.	Res.	Res.	Res.	CALM[8:0]								
rw	rw	rw					rw	rw	rw	rw	rw	rw	rw	rw	rw

Bits 31:16 Reserved, must be kept at reset value.

Bit 15 **CALP**: Increase frequency of RTC by 488.5 ppm

0: No RTCCLK pulses are added.

1: One RTCCLK pulse is effectively inserted every 2^{11} pulses (frequency increased by 488.5 ppm).

This feature is intended to be used in conjunction with CALM, which lowers the frequency of the calendar with a fine resolution. if the input frequency is 32768 Hz, the number of RTCCLK pulses added during a 32-second window is calculated as follows: (512 * CALP) - CALM.

Refer to *Section 38.3.12: RTC smooth digital calibration*.

Bit 14 **CALW8:** Use an 8-second calibration cycle period

When CALW8 is set to ‘1’, the 8-second calibration cycle period is selected.

Note: CALM[1:0] are stuck at “00” when CALW8=’1’. Refer to Section 38.3.12: RTC smooth digital calibration.

Bit 13 **CALW16:** Use a 16-second calibration cycle period

When CALW16 is set to ‘1’, the 16-second calibration cycle period is selected.This bit must not be set to ‘1’ if CALW8=1.

Note: CALM[0] is stuck at ‘0’ when CALW16=’1’. Refer to Section 38.3.12: RTC smooth digital calibration.

Bits 12:9 Reserved, must be kept at reset value.

Bits 8:0 **CALM[8:0]**: Calibration minus

The frequency of the calendar is reduced by masking CALM out of 2^{20} RTCCLK pulses (32 seconds if the input frequency is 32768 Hz). This decreases the frequency of the calendar with a resolution of 0.9537 ppm.

To increase the frequency of the calendar, this feature should be used in conjunction with CALP. See *Section 38.3.12: RTC smooth digital calibration on page 1235*.

38.6.16 RTC tamper configuration register (RTC_TAMPCR)

Address offset: 0x40

Backup domain reset value: 0x0000 0000

System reset: not affected

31	30	29	28	27	26	25	24	23	22	21	20	19	18	17	16
Res.	Res.	Res.	Res.	Res.	Res.	Res.	TAMP3 MF	TAMP3 NO ERASE	TAMP3 IE	TAMP2 MF	TAMP2 NO ERASE	TAMP2 IE	TAMP1 MF	TAMP1 NO ERASE	TAMP1 IE
							rw	rw	rw	rw	rw	rw	rw	rw	rw

15	14	13	12	11	10	9	8	7	6	5	4	3	2	1	0
TAMP PUDIS	TAMPPRCH [1:0]		TAMPFLT[1:0]		TAMPFREQ[2:0]			TAMP TS	TAMP3 TRG	TAMP3 E	TAMP2 TRG	TAMP2 E	TAMPI E	TAMP1 TRG	TAMP1 E
rw	rw	rw	rw	rw	rw	rw	rw	rw	rw	rw	rw	rw	rw	rw	rw

Bits 31:25 Reserved, must be kept at reset value.

Bit 24 **TAMP3MF**: Tamper 3 mask flag

0: Tamper 3 event generates a trigger event and TAMP3F must be cleared by software to allow next tamper event detection.

1: Tamper 3 event generates a trigger event. TAMP3F is masked and internally cleared by hardware. The backup registers are not erased.

Note: The Tamper 3 interrupt must not be enabled when TAMP3MF is set.

Bit 23 **TAMP3NOERASE**: Tamper 3 no erase

0: Tamper 3 event erases the backup registers.

1: Tamper 3 event does not erase the backup registers.

Bit 22 **TAMP3IE**: Tamper 3 interrupt enable

0: Tamper 3 interrupt is disabled if TAMPIE = 0.

1: Tamper 3 interrupt enabled.

Bit 21 **TAMP2MF**: Tamper 2 mask flag

0: Tamper 2 event generates a trigger event and TAMP2F must be cleared by software to allow next tamper event detection.

1: Tamper 2 event generates a trigger event. TAMP2F is masked and internally cleared by hardware. The backup registers are not erased.

Note: The Tamper 2 interrupt must not be enabled when TAMP2MF is set.

Bit 20 **TAMP2NOERASE**: Tamper 2 no erase

0: Tamper 2 event erases the backup registers.

1: Tamper 2 event does not erase the backup registers.

Bit 19 **TAMP2IE**: Tamper 2 interrupt enable

0: Tamper 2 interrupt is disabled if TAMPIE = 0.

1: Tamper 2 interrupt enabled.

Bit 18 **TAMP1MF**: Tamper 1 mask flag

0: Tamper 1 event generates a trigger event and TAMP1F must be cleared by software to allow next tamper event detection.

1: Tamper 1 event generates a trigger event. TAMP1F is masked and internally cleared by hardware.The backup registers are not erased.

Note: The Tamper 1 interrupt must not be enabled when TAMP1MF is set.

Bit 17 **TAMP1NOERASE**: Tamper 1 no erase

0: Tamper 1 event erases the backup registers.

1: Tamper 1 event does not erase the backup registers.

Bit 16 **TAMP1IE**: Tamper 1 interrupt enable

0: Tamper 1 interrupt is disabled if TAMPIE = 0.

1: Tamper 1 interrupt enabled.

Bit 15 **TAMPPUDIS**: RTC_TAMPx pull-up disable

This bit determines if each of the RTC_TAMPx pins are precharged before each sample.

0: Precharge RTC_TAMPx pins before sampling (enable internal pull-up)

1: Disable precharge of RTC_TAMPx pins.

Bits 14:13 **TAMPPRCH[1:0]**: RTC_TAMPx precharge duration

These bit determines the duration of time during which the pull-up/is activated before each sample. TAMPPRCH is valid for each of the RTC_TAMPx inputs.

0x0: 1 RTCCLK cycle

0x1: 2 RTCCLK cycles

0x2: 4 RTCCLK cycles

0x3: 8 RTCCLK cycles

Bits 12:11 **TAMPFLT[1:0]**: RTC_TAMPx filter count

These bits determines the number of consecutive samples at the specified level (TAMP*TRG) needed to activate a Tamper event. TAMPFLT is valid for each of the RTC_TAMPx inputs.

0x0: Tamper event is activated on edge of RTC_TAMPx input transitions to the active level (no internal pull-up on RTC_TAMPx input).

0x1: Tamper event is activated after 2 consecutive samples at the active level.

0x2: Tamper event is activated after 4 consecutive samples at the active level.

0x3: Tamper event is activated after 8 consecutive samples at the active level.

Bits 10:8 **TAMPFREQ[2:0]**: Tamper sampling frequency

Determines the frequency at which each of the RTC_TAMPx inputs are sampled.

0x0: RTCCLK / 32768 (1 Hz when RTCCLK = 32768 Hz)

0x1: RTCCLK / 16384 (2 Hz when RTCCLK = 32768 Hz)

0x2: RTCCLK / 8192 (4 Hz when RTCCLK = 32768 Hz)

0x3: RTCCLK / 4096 (8 Hz when RTCCLK = 32768 Hz)

0x4: RTCCLK / 2048 (16 Hz when RTCCLK = 32768 Hz)

0x5: RTCCLK / 1024 (32 Hz when RTCCLK = 32768 Hz)

0x6: RTCCLK / 512 (64 Hz when RTCCLK = 32768 Hz)

0x7: RTCCLK / 256 (128 Hz when RTCCLK = 32768 Hz)

Bit 7 **TAMPTS**: Activate timestamp on tamper detection event

0: Tamper detection event does not cause a timestamp to be saved

1: Save timestamp on tamper detection event

TAMPTS is valid even if TSE=0 in the RTC_CR register.

Bit 6 **TAMP3TRG:** Active level for RTC_TAMP3 input

if TAMPFLT ≠ 00:

0: RTC_TAMP3 input staying low triggers a tamper detection event.

1: RTC_TAMP3 input staying high triggers a tamper detection event.

if TAMPFLT = 00:

0: RTC_TAMP3 input rising edge triggers a tamper detection event.

1: RTC_TAMP3 input falling edge triggers a tamper detection event.

Bit 5 **TAMP3E**: RTC_TAMP3 detection enable
0: RTC_TAMP3 input detection disabled
1: RTC_TAMP3 input detection enabled

Bit 4 **TAMP2TRG**: Active level for RTC_TAMP2 input
if TAMPFLT != 00:
0: RTC_TAMP2 input staying low triggers a tamper detection event.
1: RTC_TAMP2 input staying high triggers a tamper detection event.
if TAMPFLT = 00:
0: RTC_TAMP2 input rising edge triggers a tamper detection event.
1: RTC_TAMP2 input falling edge triggers a tamper detection event.

Bit 3 **TAMP2E**: RTC_TAMP2 input detection enable
0: RTC_TAMP2 detection disabled
1: RTC_TAMP2 detection enabled

Bit 2 **TAMPIE**: Tamper interrupt enable
0: Tamper interrupt disabled
1: Tamper interrupt enabled.

Note: This bit enables the interrupt for all tamper pins events, whatever TAMPxIE level. If this bit is cleared, each tamper event interrupt can be individually enabled by setting TAMPxIE.

Bit 1 **TAMP1TRG**: Active level for RTC_TAMP1 input
If TAMPFLT != 00
0: RTC_TAMP1 input staying low triggers a tamper detection event.
1: RTC_TAMP1 input staying high triggers a tamper detection event.
if TAMPFLT = 00:
0: RTC_TAMP1 input rising edge triggers a tamper detection event.
1: RTC_TAMP1 input falling edge triggers a tamper detection event.

Bit 0 **TAMP1E**: RTC_TAMP1 input detection enable
0: RTC_TAMP1 detection disabled
1: RTC_TAMP1 detection enabled

Caution: When TAMPFLT = 0, TAMPxE must be reset when TAMPxTRG is changed to avoid spuriously setting TAMPxF.

38.6.17 RTC alarm A sub second register (RTC_ALRMASSR)

This register can be written only when ALRAE is reset in RTC_CR register, or in initialization mode.

This register is write protected. The write access procedure is described in *RTC register write protection on page 1231*

Address offset: 0x44

Backup domain reset value: 0x0000 0000

System reset: not affected

31	30	29	28	27	26	25	24	23	22	21	20	19	18	17	16
Res.	Res.	Res.	Res.	MASKSS[3:0]				Res.	Res.	Res.	Res.	Res.	Res.	Res.	Res.
				rw	rw	rw	rw								

15	14	13	12	11	10	9	8	7	6	5	4	3	2	1	0
Res.	SS[14:0]														
	rw	rw	rw	rw	rw	rw	rw	rw	rw	rw	rw	rw	w	rw	rw

Bits 31:28 Reserved, must be kept at reset value.

Bits 27:24 MASKSS[3:0]: Mask the most-significant bits starting at this bit

0: No comparison on sub seconds for Alarm A. The alarm is set when the seconds unit is incremented (assuming that the rest of the fields match).
1: SS[14:1] are don't care in Alarm A comparison. Only SS[0] is compared.
2: SS[14:2] are don't care in Alarm A comparison. Only SS[1:0] are compared.
3: SS[14:3] are don't care in Alarm A comparison. Only SS[2:0] are compared.
...
12: SS[14:12] are don't care in Alarm A comparison. SS[11:0] are compared.
13: SS[14:13] are don't care in Alarm A comparison. SS[12:0] are compared.
14: SS[14] is don't care in Alarm A comparison. SS[13:0] are compared.
15: All 15 SS bits are compared and must match to activate alarm.
The overflow bits of the synchronous counter (bits 15) is never compared. This bit can be different from 0 only after a shift operation.

Bits 23:15 Reserved, must be kept at reset value.

Bits 14:0 SS[14:0]: Sub seconds value

This value is compared with the contents of the synchronous prescaler counter to determine if Alarm A is to be activated. Only bits 0 up MASKSS-1 are compared.

38.6.18 RTC alarm B sub second register (RTC_ALRMBSSR)

This register can be written only when ALRBE is reset in RTC_CR register, or in initialization mode.

This register is write protected.The write access procedure is described in *Section : RTC register write protection*.

Address offset: 0x48

Backup domain reset value: 0x0000 0000

System reset: not affected

31	30	29	28	27	26	25	24	23	22	21	20	19	18	17	16
Res.	Res.	Res.	Res.	MASKSS[3:0]				Res.	Res.	Res.	Res.	Res.	Res.	Res.	Res.
				rw	rw	rw	rw								

15	14	13	12	11	10	9	8	7	6	5	4	3	2	1	0
Res.	SS[14:0]														
	rw	rw	rw	rw	rw	rw	rw	rw	rw	rw	rw	rw	w	rw	rw

Bits 31:28 Reserved, must be kept at reset value.

Bits 27:24 **MASKSS[3:0]**: Mask the most-significant bits starting at this bit

0x0: No comparison on sub seconds for Alarm B. The alarm is set when the seconds unit is incremented (assuming that the rest of the fields match).
0x1: SS[14:1] are don't care in Alarm B comparison. Only SS[0] is compared.
0x2: SS[14:2] are don't care in Alarm B comparison. Only SS[1:0] are compared.
0x3: SS[14:3] are don't care in Alarm B comparison. Only SS[2:0] are compared.
...
0xC: SS[14:12] are don't care in Alarm B comparison. SS[11:0] are compared.
0xD: SS[14:13] are don't care in Alarm B comparison. SS[12:0] are compared.
0xE: SS[14] is don't care in Alarm B comparison. SS[13:0] are compared.
0xF: All 15 SS bits are compared and must match to activate alarm.
The overflow bits of the synchronous counter (bits 15) is never compared. This bit can be different from 0 only after a shift operation.

Bits 23:15 Reserved, must be kept at reset value.

Bits 14:0 **SS[14:0]**: Sub seconds value

This value is compared with the contents of the synchronous prescaler counter to determine if Alarm B is to be activated. Only bits 0 up to MASKSS-1 are compared.

38.6.19 RTC option register (RTC_OR)

Address offset: 0x4C

Backup domain reset value: 0x0000 0000

System reset: not affected

31	30	29	28	27	26	25	24	23	22	21	20	19	18	17	16
Res.	Res.	Res.	Res.	Res.	Res.	Res.	Res.	Res.	Res.	Res.	Res.	Res.	Res.	Res.	Res.

15	14	13	12	11	10	9	8	7	6	5	4	3	2	1	0
Res.	Res.	Res.	Res.	Res.	Res.	Res.	Res.	Res.	Res.	Res.	Res.	Res.	Res.	RTC_ OUT_ RMP	RTC_ ALARM _TYPE
														rw	rw

Bits 31:2 Reserved, must be kept at reset value.

Bit 1 **RTC_OUT_RMP**: RTC_OUT remap

Setting this bit allows to remap the RTC outputs on PB2 as follows:

RTC_OUT_RMP = ‘0’:

If OSEL/= ‘00’: RTC_ALARM is output on PC13

If OSEL= ‘00’ and COE = ‘1’: RTC_CALIB is output on PC13

RTC_OUT_RMP = ‘1’:

If OSEL /= ‘00’ and COE = ‘0’: RTC_ALARM is output on PB2

If OSEL = ‘00’ and COE = ‘1’: RTC_CALIB is output on PB2

If OSEL /= ‘00’ and COE = ‘1’: RTC_CALIB is output on PB2 and RTC_ALARM is output on PC13.

Bit 0 **RTC_ALARM_TYPE**: RTC_ALARM output type on PC13

This bit is set and cleared by software

0: RTC_ALARM, when mapped on PC13, is open-drain output

1: RTC_ALARM, when mapped on PC13, is push-pull output

38.6.20 RTC backup registers (RTC_BKPxR)

Address offset: 0x50 to 0xCC

Backup domain reset value: 0x0000 0000

System reset: not affected

31	30	29	28	27	26	25	24	23	22	21	20	19	18	17	16
BKP[31:16]															
rw	rw	rw	rw	rw	rw	rw	rw	rw	rw	rw	rw	rw	rw	rw	rw

15	14	13	12	11	10	9	8	7	6	5	4	3	2	1	0
BKP[15:0]															
rw	rw	rw	rw	rw	rw	rw	rw	rw	rw	rw	rw	rw	w	rw	rw

Bits 31:0 BKP[31:0]

The application can write or read data to and from these registers.

They are powered-on by V_{BAT} when V_{DD} is switched off, so that they are not reset by System reset, and their contents remain valid when the device operates in low-power mode.

This register is reset on a tamper detection event, as long as TAMPxF=1.

38.6.21 RTC register map

Table 226. RTC register map and reset values

Offset	Register name	31	30	29	28	27	26	25	24	23	22	21	20	19	18	17	16	15	14	13	12	11	10	9	8	7	6	5	4	3	2	1	0
0x00	**RTC_TR**	Res.	Res.	Res.	Res.	Res.	Res.	Res.	Res.	Res.	PM	HT[1:0]		HU[3:0]				Res.	MNT[2:0]			MNU[3:0]				Res.	ST[2:0]			SU[3:0]			
	Reset value										0	0	0	0	0	0	0		0	0	0	0	0	0	0		0	0	0	0	0	0	0
0x04	**RTC_DR**	Res.	Res.	Res.	Res.	Res.	Res.	Res.	Res.	YT[3:0]				YU[3:0]				WDU[2:0]			MT	MU[3:0]				Res.	Res.	DT[1:0]		DU[3:0]			
	Reset value									0	0	0	0	0	0	0	0	0	0	1	0	0	0	0	1			0	0	0	0	0	1
0x08	**RTC_CR**	Res.	Res.	Res.	Res.	Res.	Res.	Res.	ITSE	COE	OSEL[1:0]		POL	COSEL	BKP	SUB1H	ADD1H	TSIE	WUTIE	ALRBIE	ALRAIE	TSE	WUTE	ALRBE	ALRAE	Res.	FMT	BYPSHAD	REFCKON	TSEDGE	WUCKSEL[2:0]		
	Reset value								0	0	0	0	0		0	0	0	0	0	0	0	0	0	0	0		0	0	0	0	0	0	0
0x0C	**RTC_ISR**	Res.	Res.	Res.	Res.	Res.	Res.	Res.	Res.	Res.	Res.	Res.	Res.	Res.	Res.	ITSF	RECALPF	TAMP3F	TAMP2F	TAMP1F	TSOVF	TSF	WUTF	ALRBF	ALRAF	INIT	INITF	RSF	INITS	SHPF	WUT WF	ALRBWF	ALRAWF
	Reset value															0	0	0	0	0	0	0	0	0	0	0	0	0	0	0	1	1	1
0x10	**RTC_PRER**	Res.	Res.	Res.	Res.	Res.	Res.	Res.	Res.	Res.	PREDIV_A[6:0]							PREDIV_S[14:0]															
	Reset value										1	1	1	1	1	1	1	0	0	0	0	0	0	0	0	1	1	1	1	1	1	1	1
0x14	**RTC_WUTR**	Res.	Res.	Res.	Res.	Res.	Res.	Res.	Res.	Res.	Res.	Res.	Res.	Res.	Res.	Res.	Res.	WUT[15:0]															
	Reset value																	1	1	1	1	1	1	1	1	1	1	1	1	1	1	1	1
0x1C	**RTC_ALRMAR**	MSK4	WDSEL	DT[1:0]		DU[3:0]				MSK3	PM	HT[1:0]		HU[3:0]				MSK2	MNT[2:0]			MNU[3:0]				MSK1	ST[2:0]			SU[3:0]			
	Reset value	0	0	0	0	0	0	0	0	0	0	0	0	0	0	0	0	0	0	0	0	0	0	0	0	0	0	0	0	0	0	0	0
0x20	**RTC_ALRMBR**	MSK4	WDSEL	DT[1:0]		DU[3:0]				MSK3	PM	HT[1:0]		HU[3:0]				MSK2	MNT[2:0]			MNU[3:0]				MSK2	ST[2:0]			SU[3:0]			
	Reset value	0	0	0	0	0	0	0	0	0	0	0	0	0	0	0	0	0	0	0	0	0	0	0	0	0	0	0	0	0	0	0	0
0x24	**RTC_WPR**	Res.	Res.	Res.	Res.	Res.	Res.	Res.	Res.	Res.	Res.	Res.	Res.	Res.	Res.	Res.	Res.	Res.	Res.	Res.	Res.	Res.	Res.	Res.	Res.	KEY							
	Reset value																									0	0	0	0	0	0	0	0
0x28	**RTC_SSR**	Res.	Res.	Res.	Res.	Res.	Res.	Res.	Res.	Res.	Res.	Res.	Res.	Res.	Res.	Res.	Res.	SS[15:0]															
	Reset value																	0	0	0	0	0	0	0	0	0	0	0	0	0	0	0	0
0x2C	**RTC_SHIFTR**	ADD1S	Res.	Res.	Res.	Res.	Res.	Res.	Res.	Res.	Res.	Res.	Res.	Res.	Res.	Res.	Res.	Res.	SUBFS[14:0]														
	Reset value	0																	0	0	0	0	0	0	0	0	0	0	0	0	0	0	0
0x30	**RTC_TSTR**	Res.	Res.	Res.	Res.	Res.	Res.	Res.	Res.	Res.	PM	HT[1:0]		HU[3:0]				Res.	MNT[2:0]			MNU[3:0]				Res.	ST[2:0]			SU[3:0]			
	Reset value										0	0	0	0	0	0	0		0	0	0	0	0	0	0		0	0	0	0	0	0	0

Table 226. RTC register map and reset values (continued)

Offset	Register name	31	30	29	28	27	26	25	24	23	22	21	20	19	18	17	16	15	14	13	12	11	10	9	8	7	6	5	4	3	2	1	0
0x34	**RTC_TSDR**	Res.	Res.	Res.	Res.	Res.	Res.	Res.	Res.	Res.	Res.	Res.	Res.	Res.	Res.	Res.	Res.	WDU[1:0]			MT	MU[3:0]				Res.	Res.	DT[1:0]		DU[3:0]			
	Reset value																	0	0	0	0	0	0	0	0			0	0	0	0	0	0
0x38	**RTC_TSSSR**	Res.	Res.	Res.	Res.	Res.	Res.	Res.	Res.	Res.	Res.	Res.	Res.	Res.	Res.	Res.	Res.	SS[15:0]															
	Reset value																	0	0	0	0	0	0	0	0	0	0	0	0	0	0	0	0
0x3C	**RTC_ CALR**	Res.	Res.	Res.	Res.	Res.	Res.	Res.	Res.	Res.	Res.	Res.	Res.	Res.	Res.	Res.	Res.	CALP	CALW8	CALW16	Res.	Res.	Res.	Res.	CALM[8:0]								
	Reset value																	0	0	0					0	0	0	0	0	0	0	0	0
0x40	**RTC_TAMPCR**	Res.	Res.	Res.	Res.	Res.	Res.	Res.	TAMP3MF	TAMP3NOERASE	TAMP3IE	TAMP2MF	TAMP2NOERASE	TAMP2IE	TAMP1MF	TAMP1NOERASE	TAMP1IE	TAMPPUDIS	TAMPPRCH[1:0]		TAMPFLT[1:0]		TAMPFREQ[2:0]			TAMPTS	TAMP3TRG	TAMP3E	TAMP2TRG	TAMP2E	TAMPIE	TAMP1TRG	TAMP1E
	Reset value								0	0	0	0	0	0	0	0	0	0	0	0	0	0	0	0	0	0	0	0	0	0	0	0	0
0x44	**RTC_ ALRMASSR**	Res.	Res.	Res.	Res.	MASKSS [3:0]				Res.	Res.	Res.	Res.	Res.	Res.	Res.	Res.	Res.	SS[14:0]														
	Reset value					0	0	0	0										0	0	0	0	0	0	0	0	0	0	0	0	0	0	0
0x48	**RTC_ ALRMBSSR**	Res.	Res.	Res.	Res.	MASKSS [3:0]				Res.	Res.	Res.	Res.	Res.	Res.	Res.	Res.	Res.	SS[14:0]														
	Reset value					0	0	0	0										0	0	0	0	0	0	0	0	0	0	0	0	0	0	0
0x4C	**RTC_ OR**	Res.	Res.	Res.	Res.	Res.	Res.	Res.	Res.	Res.	Res.	Res.	Res.	Res.	Res.	Res.	Res.	Res.	Res.	Res.	Res.	Res.	Res.	Res.	Res.	Res.	Res.	Res.	Res.	Res.	Res.	RTC_OUT_RMP	RTC_ALARM_TYPE
	Reset value																															0	0
0x50 to 0xCC	**RTC_BKP0R**	BKP[31:0]																															
	Reset value	0	0	0	0	0	0	0	0	0	0	0	0	0	0	0	0	0	0	0	0	0	0	0	0	0	0	0	0	0	0	0	0
	to **RTC_BKP31R**	BKP[31:0]																															
	Reset value	0	0	0	0	0	0	0	0	0	0	0	0	0	0	0	0	0	0	0	0	0	0	0	0	0	0	0	0	0	0	0	0

Refer to *Section 2.2 on page 75* for the register boundary addresses.

39 Inter-integrated circuit (I2C) interface

39.1 Introduction

The I^2C (inter-integrated circuit) bus interface handles communications between the microcontroller and the serial I^2C bus. It provides multimaster capability, and controls all I^2C bus-specific sequencing, protocol, arbitration and timing. It supports Standard-mode (Sm), Fast-mode (Fm) and Fast-mode Plus (Fm+).

It is also SMBus (system management bus) and PMBus (power management bus) compatible.

DMA can be used to reduce CPU overload.

39.2 I2C main features

- I^2C bus specification rev03 compatibility:
  - Slave and master modes
  - Multimaster capability
  - Standard-mode (up to 100 kHz)
  - Fast-mode (up to 400 kHz)
  - Fast-mode Plus (up to 1 MHz)
  - 7-bit and 10-bit addressing mode
  - Multiple 7-bit slave addresses (2 addresses, 1 with configurable mask)
  - All 7-bit addresses acknowledge mode
  - General call
  - Programmable setup and hold times
  - Easy to use event management
  - Optional clock stretching
  - Software reset
- 1-byte buffer with DMA capability
- Programmable analog and digital noise filters

The following additional features are also available depending on the product implementation (see *Section 39.3: I2C implementation*):

- SMBus specification rev 3.0 compatibility:
  - Hardware PEC (Packet Error Checking) generation and verification with ACK control
  - Command and data acknowledge control
  - Address resolution protocol (ARP) support
  - Host and Device support
  - SMBus alert
  - Timeouts and idle condition detection
- PMBus rev 1.3 standard compatibility
- Independent clock: a choice of independent clock sources allowing the I2C communication speed to be independent from the PCLK reprogramming
- Wakeup from Stop mode on address match.

39.3 I2C implementation

This manual describes the full set of features implemented in I2C peripheral. I2C1, I2C2, I2C3 and I2C4[a] implement the full set of features as shown in the following tables, with the restriction than only I2C3 can wake up from Stop 2 mode.

Table 227. STM32L49x/L4Ax devices I2C implementation

I2C features[1]	I2C1	I2C2	I2C3	I2C4
7-bit addressing mode	X	X	X	X
10-bit addressing mode	X	X	X	X
Standard-mode (up to 100 kbit/s)	X	X	X	X
Fast-mode (up to 400 kbit/s)	X	X	X	X
Fast-mode Plus with 20mA output drive I/Os (up to 1 Mbit/s)	X	X	X	X
Independent clock	X	X	X	X
Wakeup from Stop 1 mode	X	X	X	X
Wakeup from Stop 2 mode	-	-	X	-
SMBus/PMBus	X	X	X	X

1. X = supported.

Table 228. STM32L47x/L48x devices I2C implementation

I2C features[1]	I2C1	I2C2	I2C3
7-bit addressing mode	X	X	X
10-bit addressing mode	X	X	X

a. Available only on STM32L49x/L4Ax devices.

Table 228. STM32L47x/L48x devices I2C implementation (continued)

I2C features[1]	I2C1	I2C2	I2C3
Standard-mode (up to 100 kbit/s)	X	X	X
Fast-mode (up to 400 kbit/s)	X	X	X
Fast-mode Plus with 20mA output drive I/Os (up to 1 Mbit/s)	X	X	X
Independent clock	X	X	X
Wakeup from Stop 0 mode	X	X	X
Wakeup from Stop 1 mode	X	X	X
Wakeup from Stop 2 mode	-	-	X
SMBus/PMBus	X	X	X

1. X = supported.

39.4 I2C functional description

In addition to receiving and transmitting data, this interface converts it from serial to parallel format and vice versa. The interrupts are enabled or disabled by software. The interface is connected to the I^2C bus by a data pin (SDA) and by a clock pin (SCL). It can be connected with a standard (up to 100 kHz), Fast-mode (up to 400 kHz) or Fast-mode Plus (up to 1 MHz) I^2C bus.

This interface can also be connected to a SMBus with the data pin (SDA) and clock pin (SCL).

If SMBus feature is supported: the additional optional SMBus Alert pin (SMBA) is also available.

39.4.1 I2C block diagram

The block diagram of the I2C interface is shown in *Figure 388*.

Figure 388. I2C block diagram

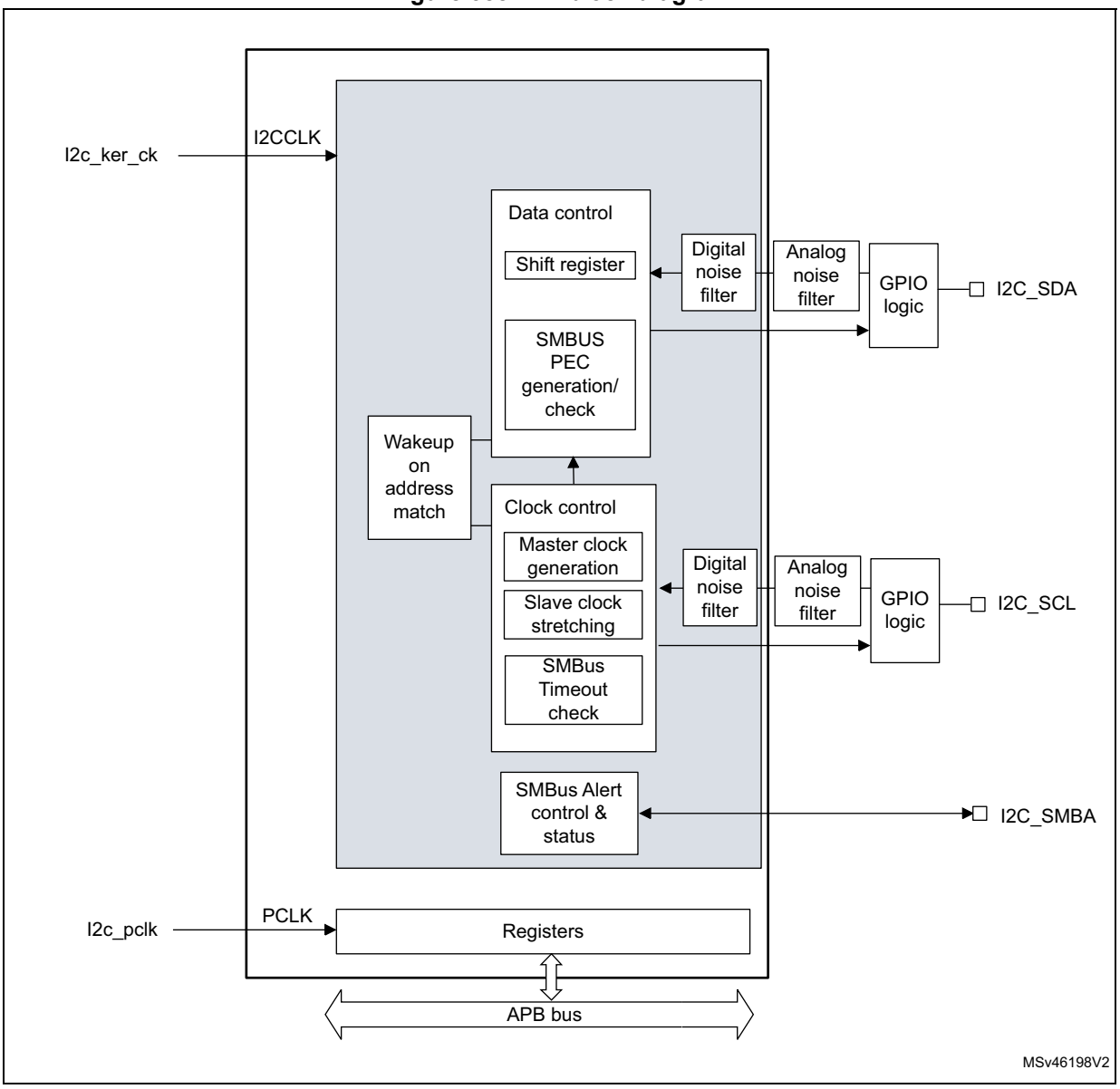

The I2C is clocked by an independent clock source which allows the I2C to operate independently from the PCLK frequency.

For I2C I/Os supporting 20 mA output current drive for Fast-mode Plus operation, the driving capability is enabled through control bits in the system configuration controller (SYSCFG). *Refer to Section 39.3: I2C implementation.*

39.4.2 I2C pins and internal signals

Table 229. I2C input/output pins

Pin name	Signal type	Description
I2C_SDA	Bidirectional	I2C data
I2C_SCL	Bidirectional	I2C clock
I2C_SMBA	Bidirectional	SMBus Alert

Table 230. I2C internal input/output signals

Internal signal name	Signal type	Description
i2c_ker_ck	Input	I2C kernel clock, also named I2CCLK in this document
i2c_pclk	Input	I2C APB clock
i2c_it	Output	I2C interrupts, refer to *Table 244: I2C Interrupt requests* for the full list of interrupt sources
i2c_rx_dma	Output	I2C Receive Data DMA request (I2C_RX)
i2c_tx_dma	Output	I2C Transmit Data DMA request (I2C_TX)

39.4.3 I2C clock requirements

The I2C kernel is clocked by I2CCLK.

The I2CCLK period t_{I2CCLK} must respect the following conditions:

$t_{I2CCLK} < (t_{LOW} - t_{filters}) / 4$ and $t_{I2CCLK} < t_{HIGH}$

with:

t_{LOW}: SCL low time and t_{HIGH}: SCL high time

$t_{filters:}$ when enabled, sum of the delays brought by the analog filter and by the digital filter.

Analog filter delay is maximum 260 ns. Digital filter delay is DNF x t_{I2CCLK}.

The PCLK clock period t_{PCLK} must respect the following condition:

$t_{PCLK} < 4/3\ t_{SCL}$

with t_{SCL}: SCL period

Caution: When the I2C kernel is clocked by PCLK, this clock must respect the conditions for t_{I2CCLK}.

39.4.4 Mode selection

The interface can operate in one of the four following modes:

- Slave transmitter
- Slave receiver
- Master transmitter
- Master receiver

By default, it operates in slave mode. The interface automatically switches from slave to master when it generates a START condition, and from master to slave if an arbitration loss or a STOP generation occurs, allowing multimaster capability.

Communication flow

In Master mode, the I2C interface initiates a data transfer and generates the clock signal. A serial data transfer always begins with a START condition and ends with a STOP condition. Both START and STOP conditions are generated in master mode by software.

In Slave mode, the interface is capable of recognizing its own addresses (7 or 10-bit), and the General Call address. The General Call address detection can be enabled or disabled by software. The reserved SMBus addresses can also be enabled by software.

Data and addresses are transferred as 8-bit bytes, MSB first. The first byte(s) following the START condition contain the address (one in 7-bit mode, two in 10-bit mode). The address is always transmitted in Master mode.

A 9th clock pulse follows the 8 clock cycles of a byte transfer, during which the receiver must send an acknowledge bit to the transmitter. Refer to the following figure.

Figure 389. I^{2}C bus protocol

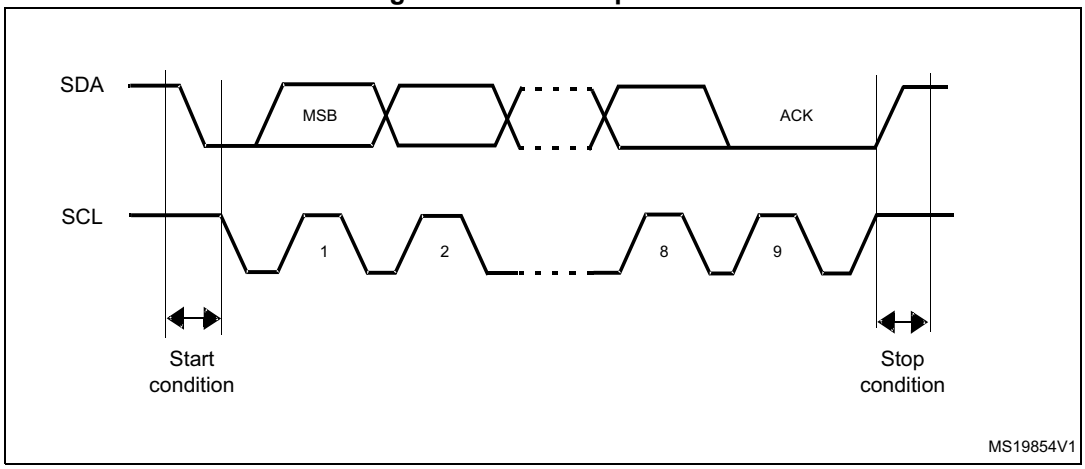

Acknowledge can be enabled or disabled by software. The I2C interface addresses can be selected by software.

39.4.5 I2C initialization

Enabling and disabling the peripheral

The I2C peripheral clock must be configured and enabled in the clock controller.

Then the I2C can be enabled by setting the PE bit in the I2C_CR1 register.

When the I2C is disabled (PE=0), the I^{2}C performs a software reset. Refer to *Section 39.4.6: Software reset* for more details.

Noise filters

Before enabling the I2C peripheral by setting the PE bit in I2C_CR1 register, the user must configure the noise filters, if needed. By default, an analog noise filter is present on the SDA and SCL inputs. This analog filter is compliant with the I^{2}C specification which requires the

suppression of spikes with a pulse width up to 50 ns in Fast-mode and Fast-mode Plus. The user can disable this analog filter by setting the ANFOFF bit, and/or select a digital filter by configuring the DNF[3:0] bit in the I2C_CR1 register.

When the digital filter is enabled, the level of the SCL or the SDA line is internally changed only if it remains stable for more than DNF x I2CCLK periods. This allows spikes with a programmable length of 1 to 15 I2CCLK periods to be suppressed.

Table 231. Comparison of analog vs. digital filters

-	Analog filter	Digital filter
Pulse width of suppressed spikes	≥ 50 ns	Programmable length from 1 to 15 I2C peripheral clocks
Benefits	Available in Stop mode	– Programmable length: extra filtering capability vs. standard requirements – Stable length
Drawbacks	Variation vs. temperature, voltage, process	Wakeup from Stop mode on address match is not available when digital filter is enabled

Caution: Changing the filter configuration is not allowed when the I2C is enabled.

I2C timings

The timings must be configured in order to guarantee a correct data hold and setup time, used in master and slave modes. This is done by programming the PRESC[3:0], SCLDEL[3:0] and SDADEL[3:0] bits in the I2C_TIMINGR register.

The STM32CubeMX tool calculates and provides the I2C_TIMINGR content in the I2C configuration window

Figure 390. Setup and hold timings

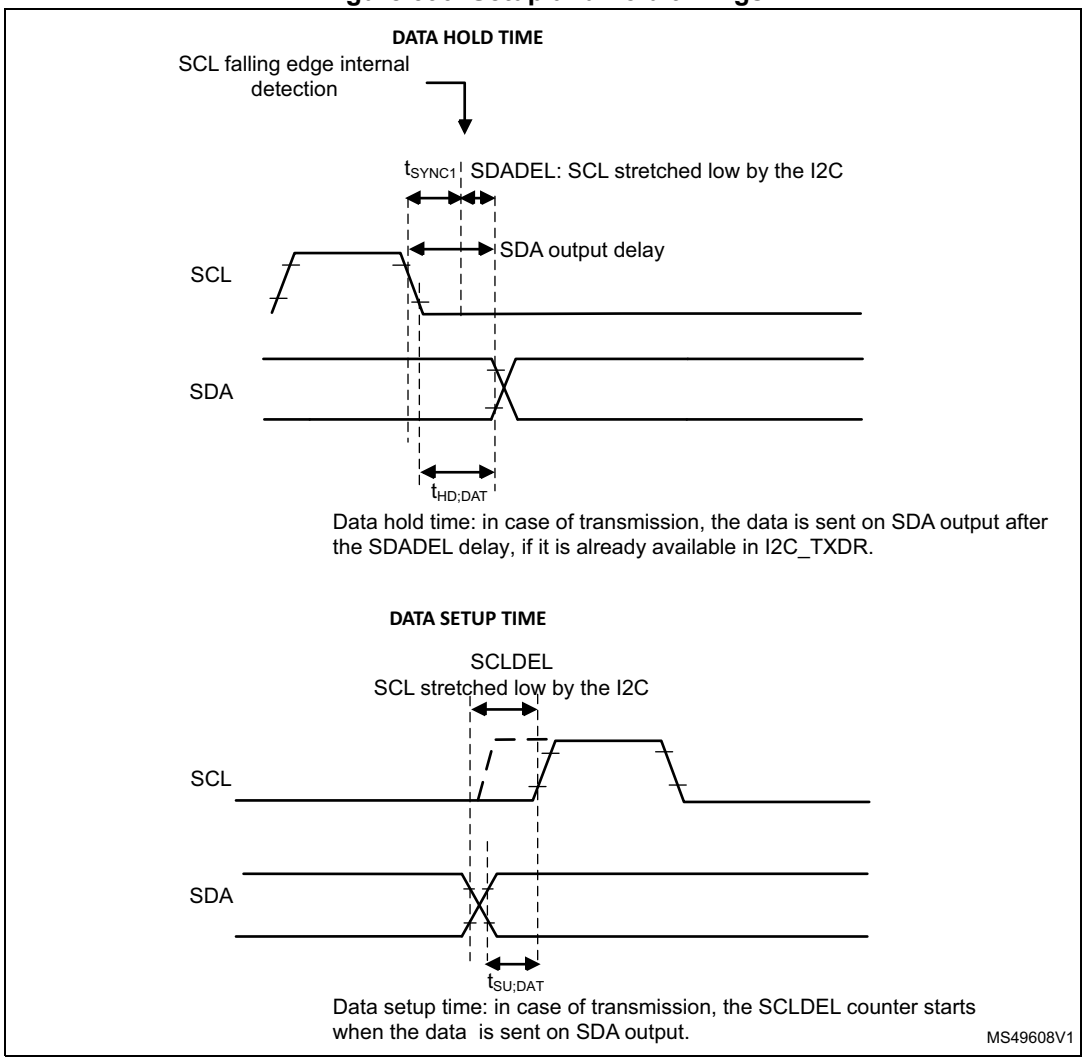

- When the SCL falling edge is internally detected, a delay is inserted before sending SDA output. This delay is t_{SDADEL} = SDADEL x t_{PRESC} + t_{I2CCLK} where t_{PRESC} = (PRESC+1) x t_{I2CCLK}.

  T_{SDADEL} impacts the hold time $t_{HD;DAT}$.

The total SDA output delay is:

t_{SYNC1} + {[SDADEL x (PRESC+1) + 1] x t_{I2CCLK} }

t_{SYNC1} duration depends on these parameters:

- SCL falling slope
- When enabled, input delay brought by the analog filter: $t_{AF(min)} < t_{AF} < t_{AF(max)}$
- When enabled, input delay brought by the digital filter: t_{DNF} = DNF x t_{I2CCLK}
- Delay due to SCL synchronization to I2CCLK clock (2 to 3 I2CCLK periods)

In order to bridge the undefined region of the SCL falling edge, the user must program SDADEL in such a way that:

$\{t_{f\ (max)} + t_{HD;DAT\ (min)} - t_{AF(min)} - [(DNF + 3) \times t_{I2CCLK}]\} / \{(PRESC + 1) \times t_{I2CCLK}\} \leq SDADEL$

$SDADEL \leq \{t_{HD;DAT\ (max)} - t_{AF(max)} - [(DNF+4) \times t_{I2CCLK}]\} / \{(PRESC + 1) \times t_{I2CCLK}\}$

Note: $t_{AF(min)}$ / $t_{AF(max)}$ *are part of the equation only when the analog filter is enabled. Refer to device datasheet for* t_{AF} *values.*

The maximum $t_{HD;DAT}$ can be 3.45 µs, 0.9 µs and 0.45 µs for Standard-mode, Fast-mode and Fast-mode Plus, but must be less than the maximum of $t_{VD;DAT}$ by a transition time. This maximum must only be met if the device does not stretch the LOW period (t_{LOW}) of the SCL signal. If the clock stretches the SCL, the data must be valid by the set-up time before it releases the clock.

The SDA rising edge is usually the worst case, so in this case the previous equation becomes:

$SDADEL \leq \{t_{VD;DAT\ (max)} - t_{r\ (max)} - 260\ ns - [(DNF+4) \times t_{I2CCLK}]\} / \{(PRESC + 1) \times t_{I2CCLK}\}$.

Note: This condition can be violated when NOSTRETCH=0, because the device stretches SCL low to guarantee the set-up time, according to the SCLDEL value.

Refer to *Table 232: I2C-SMBus specification data setup and hold times* for t_f, t_r, $t_{HD;DAT}$ and $t_{VD;DAT}$ standard values.

- After t_{SDADEL} delay, or after sending SDA output in case the slave had to stretch the clock because the data was not yet written in I2C_TXDR register, SCL line is kept at low level during the setup time. This setup time is t_{SCLDEL} = (SCLDEL+1) x t_{PRESC} where t_{PRESC} = (PRESC+1) x t_{I2CCLK}.

  t_{SCLDEL} impacts the setup time $t_{SU;DAT}$.

In order to bridge the undefined region of the SDA transition (rising edge usually worst case), the user must program SCLDEL in such a way that:

$\{[t_{r\ (max)} + t_{SU;DAT\ (min)}] / [(PRESC+1)] \times t_{I2CCLK}]\} - 1 <= SCLDEL$

Refer to *Table 232: I2C-SMBus specification data setup and hold times* for t_r and $t_{SU;DAT}$ standard values.

The SDA and SCL transition time values to be used are the ones in the application. Using the maximum values from the standard increases the constraints for the SDADEL and SCLDEL calculation, but ensures the feature whatever the application.

Note: At every clock pulse, after SCL falling edge detection, the I2C master or slave stretches SCL low during at least [(SDADEL+SCLDEL+1) x (PRESC+1) + 1] x t_{I2CCLK}, in both transmission and reception modes. In transmission mode, in case the data is not yet written in I2C_TXDR when SDADEL counter is finished, the I2C keeps on stretching SCL low until the next data is written. Then new data MSB is sent on SDA output, and SCLDEL counter starts, continuing stretching SCL low to guarantee the data setup time.

If NOSTRETCH=1 in slave mode, the SCL is not stretched. Consequently the SDADEL must be programmed in such a way to guarantee also a sufficient setup time.

Table 232. I²C-SMBus specification data setup and hold times

Symbol	Parameter	Standard-mode (Sm)		Fast-mode (Fm)		Fast-mode Plus (Fm+)		SMBus		Unit
		Min.	Max	Min.	Max	Min.	Max	Min.	Max	
$t_{HD;DAT}$	Data hold time	0	-	0	-	0	-	0.3	-	µs
$t_{VD;DAT}$	Data valid time	-	3.45	-	0.9	-	0.45	-	-	µs
$t_{SU;DAT}$	Data setup time	250	-	100	-	50	-	250	-	ns
t_r	Rise time of both SDA and SCL signals	-	1000	-	300	-	120	-	1000	ns
t_f	Fall time of both SDA and SCL signals	-	300	-	300	-	120	-	300	ns

Additionally, in master mode, the SCL clock high and low levels must be configured by programming the PRESC[3:0], SCLH[7:0] and SCLL[7:0] bits in the I2C_TIMINGR register.

- When the SCL falling edge is internally detected, a delay is inserted before releasing the SCL output. This delay is t_{SCLL} = (SCLL+1) x t_{PRESC} where t_{PRESC} = (PRESC+1) x t_{I2CCLK}.
  t_{SCLL} impacts the SCL low time t_{LOW} .
- When the SCL rising edge is internally detected, a delay is inserted before forcing the SCL output to low level. This delay is t_{SCLH} = (SCLH+1) x t_{PRESC} where t_{PRESC} = (PRESC+1) x t_{I2CCLK}. t_{SCLH} impacts the SCL high time t_{HIGH} .

Refer to *I2C master initialization* for more details.

Caution: Changing the timing configuration is not allowed when the I2C is enabled.

The I2C slave NOSTRETCH mode must also be configured before enabling the peripheral. Refer to *I2C slave initialization* for more details.

Caution: Changing the NOSTRETCH configuration is not allowed when the I2C is enabled.

Figure 391. I2C initialization flowchart

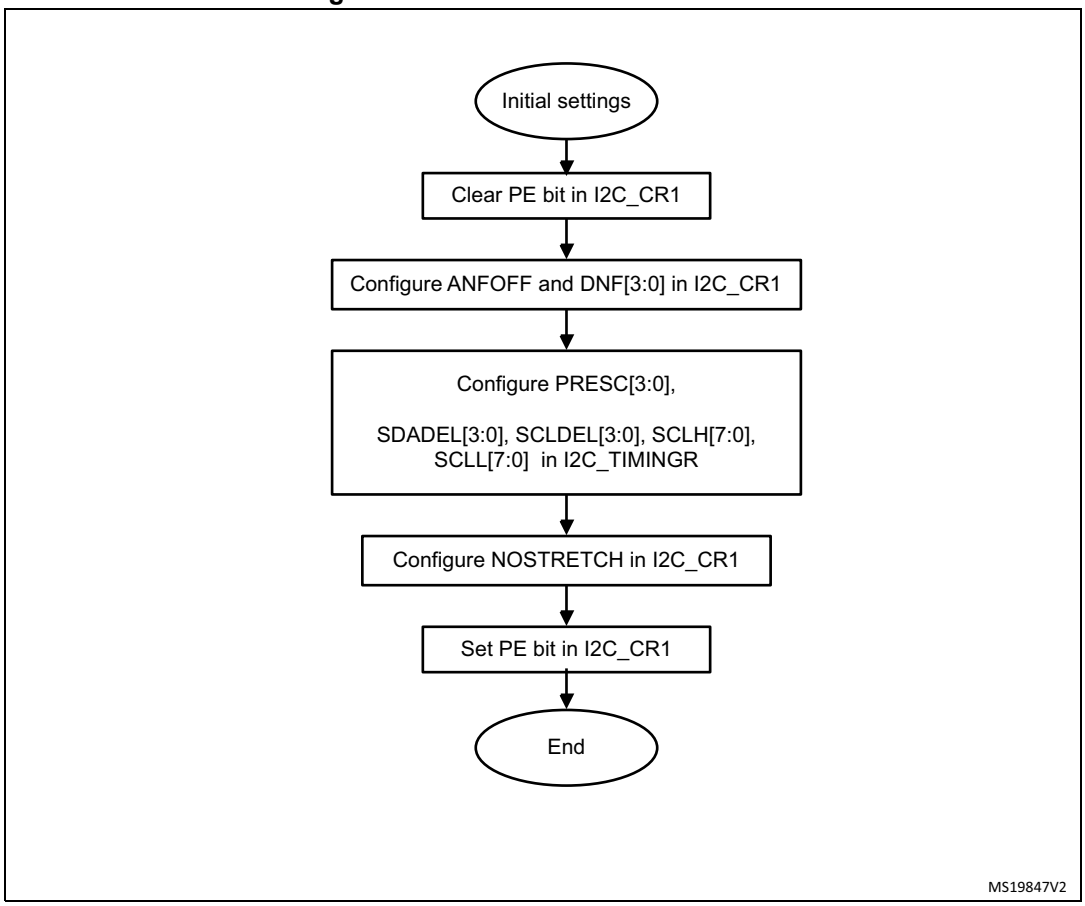

39.4.6 Software reset

A software reset can be performed by clearing the PE bit in the I2C_CR1 register. In that case I2C lines SCL and SDA are released. Internal states machines are reset and communication control bits, as well as status bits come back to their reset value. The configuration registers are not impacted.

Here is the list of impacted register bits:

1. I2C_CR2 register: START, STOP, NACK
2. I2C_ISR register: BUSY, TXE, TXIS, RXNE, ADDR, NACKF, TCR, TC, STOPF, BERR, ARLO, OVR

and in addition when the SMBus feature is supported:

1. I2C_CR2 register: PECBYTE
2. I2C_ISR register: PECERR, TIMEOUT, ALERT

PE must be kept low during at least 3 APB clock cycles in order to perform the software reset. This is ensured by writing the following software sequence: - Write PE=0 - Check PE=0 - Write PE=1.

39.4.7 Data transfer

The data transfer is managed through transmit and receive data registers and a shift register.

Reception

The SDA input fills the shift register. After the 8th SCL pulse (when the complete data byte is received), the shift register is copied into I2C_RXDR register if it is empty (RXNE=0). If RXNE=1, meaning that the previous received data byte has not yet been read, the SCL line is stretched low until I2C_RXDR is read. The stretch is inserted between the 8th and 9th SCL pulse (before the Acknowledge pulse).

Figure 392. Data reception

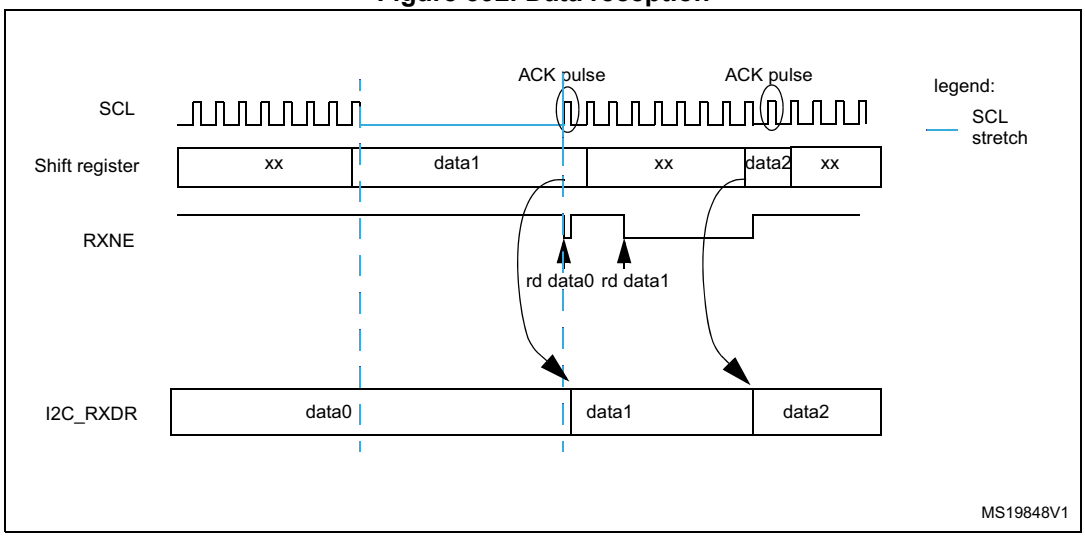

Transmission

If the I2C_TXDR register is not empty (TXE=0), its content is copied into the shift register after the 9th SCL pulse (the Acknowledge pulse). Then the shift register content is shifted out on SDA line. If TXE=1, meaning that no data is written yet in I2C_TXDR, SCL line is stretched low until I2C_TXDR is written. The stretch is done after the 9th SCL pulse.

Figure 393. Data transmission

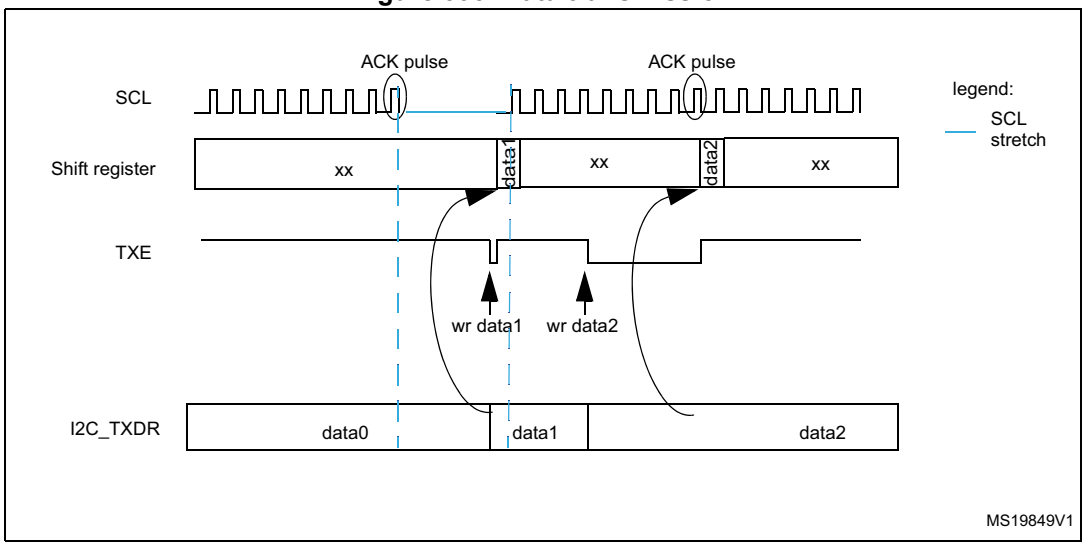

Hardware transfer management

The I2C has a byte counter embedded in hardware in order to manage byte transfer and to close the communication in various modes such as:

- NACK, STOP and ReSTART generation in master mode
- ACK control in slave receiver mode
- PEC generation/checking when SMBus feature is supported

The byte counter is always used in master mode. By default it is disabled in slave mode, but it can be enabled by software by setting the SBC (Slave Byte Control) bit in the I2C_CR2 register.

The number of bytes to be transferred is programmed in the NBYTES[7:0] bit field in the I2C_CR2 register. If the number of bytes to be transferred (NBYTES) is greater than 255, or if a receiver wants to control the acknowledge value of a received data byte, the reload mode must be selected by setting the RELOAD bit in the I2C_CR2 register. In this mode, TCR flag is set when the number of bytes programmed in NBYTES has been transferred, and an interrupt is generated if TCIE is set. SCL is stretched as long as TCR flag is set. TCR is cleared by software when NBYTES is written to a non-zero value.

When the NBYTES counter is reloaded with the last number of bytes, RELOAD bit must be cleared.

When RELOAD=0 in master mode, the counter can be used in 2 modes:

- **Automatic end mode** (AUTOEND = '1' in the I2C_CR2 register). In this mode, the master automatically sends a STOP condition once the number of bytes programmed in the NBYTES[7:0] bit field has been transferred.
- **Software end mode** (AUTOEND = '0' in the I2C_CR2 register). In this mode, software action is expected once the number of bytes programmed in the NBYTES[7:0] bit field has been transferred; the TC flag is set and an interrupt is generated if the TCIE bit is set. The SCL signal is stretched as long as the TC flag is set. The TC flag is cleared by software when the START or STOP bit is set in the I2C_CR2 register. This mode must be used when the master wants to send a RESTART condition.

Caution: The AUTOEND bit has no effect when the RELOAD bit is set.

Table 233. I2C configuration

Function	SBC bit	RELOAD bit	AUTOEND bit
Master Tx/Rx NBYTES + STOP	x	0	1
Master Tx/Rx + NBYTES + RESTART	x	0	0
Slave Tx/Rx all received bytes ACKed	0	x	x
Slave Rx with ACK control	1	1	x

39.4.8 I2C slave mode

I2C slave initialization

In order to work in slave mode, the user must enable at least one slave address. Two registers I2C_OAR1 and I2C_OAR2 are available in order to program the slave own addresses OA1 and OA2.

- OA1 can be configured either in 7-bit mode (by default) or in 10-bit addressing mode by setting the OA1MODE bit in the I2C_OAR1 register.

  OA1 is enabled by setting the OA1EN bit in the I2C_OAR1 register.
- If additional slave addresses are required, the 2nd slave address OA2 can be configured. Up to 7 OA2 LSB can be masked by configuring the OA2MSK[2:0] bits in the I2C_OAR2 register. Therefore for OA2MSK configured from 1 to 6, only OA2[7:2], OA2[7:3], OA2[7:4], OA2[7:5], OA2[7:6] or OA2[7] are compared with the received address. As soon as OA2MSK is not equal to 0, the address comparator for OA2 excludes the I2C reserved addresses (0000 XXX and 1111 XXX), which are not acknowledged. If OA2MSK=7, all received 7-bit addresses are acknowledged (except reserved addresses). OA2 is always a 7-bit address.

  These reserved addresses can be acknowledged if they are enabled by the specific enable bit, if they are programmed in the I2C_OAR1 or I2C_OAR2 register with OA2MSK=0.

  OA2 is enabled by setting the OA2EN bit in the I2C_OAR2 register.
- The General Call address is enabled by setting the GCEN bit in the I2C_CR1 register.

When the I2C is selected by one of its enabled addresses, the ADDR interrupt status flag is set, and an interrupt is generated if the ADDRIE bit is set.

By default, the slave uses its clock stretching capability, which means that it stretches the SCL signal at low level when needed, in order to perform software actions. If the master does not support clock stretching, the I2C must be configured with NOSTRETCH=1 in the I2C_CR1 register.

After receiving an ADDR interrupt, if several addresses are enabled the user must read the ADDCODE[6:0] bits in the I2C_ISR register in order to check which address matched. DIR flag must also be checked in order to know the transfer direction.

Slave clock stretching (NOSTRETCH = 0)

In default mode, the I2C slave stretches the SCL clock in the following situations:

- When the ADDR flag is set: the received address matches with one of the enabled slave addresses. This stretch is released when the ADDR flag is cleared by software setting the ADDRCF bit.
- In transmission, if the previous data transmission is completed and no new data is written in I2C_TXDR register, or if the first data byte is not written when the ADDR flag is cleared (TXE=1). This stretch is released when the data is written to the I2C_TXDR register.
- In reception when the I2C_RXDR register is not read yet and a new data reception is completed. This stretch is released when I2C_RXDR is read.
- When TCR = 1 in Slave Byte Control mode, reload mode (SBC=1 and RELOAD=1), meaning that the last data byte has been transferred. This stretch is released when then TCR is cleared by writing a non-zero value in the NBYTES[7:0] field.
- After SCL falling edge detection, the I2C stretches SCL low during [(SDADEL+SCLDEL+1) x (PRESC+1) + 1] x t_{I2CCLK}.

Slave without clock stretching (NOSTRETCH = 1)

When NOSTRETCH = 1 in the I2C_CR1 register, the I2C slave does not stretch the SCL signal.

- The SCL clock is not stretched while the ADDR flag is set.
- In transmission, the data must be written in the I2C_TXDR register before the first SCL pulse corresponding to its transfer occurs. If not, an underrun occurs, the OVR flag is set in the I2C_ISR register and an interrupt is generated if the ERRIE bit is set in the I2C_CR1 register. The OVR flag is also set when the first data transmission starts and the STOPF bit is still set (has not been cleared). Therefore, if the user clears the STOPF flag of the previous transfer only after writing the first data to be transmitted in the next transfer, he ensures that the OVR status is provided, even for the first data to be transmitted.
- In reception, the data must be read from the I2C_RXDR register before the 9th SCL pulse (ACK pulse) of the next data byte occurs. If not an overrun occurs, the OVR flag is set in the I2C_ISR register and an interrupt is generated if the ERRIE bit is set in the I2C_CR1 register.

Slave Byte Control mode

In order to allow byte ACK control in slave reception mode, Slave Byte Control mode must be enabled by setting the SBC bit in the I2C_CR1 register. This is required to be compliant with SMBus standards.

Reload mode must be selected in order to allow byte ACK control in slave reception mode (RELOAD=1). To get control of each byte, NBYTES must be initialized to 0x1 in the ADDR interrupt subroutine, and reloaded to 0x1 after each received byte. When the byte is received, the TCR bit is set, stretching the SCL signal low between the 8th and 9th SCL pulses. The user can read the data from the I2C_RXDR register, and then decide to acknowledge it or not by configuring the ACK bit in the I2C_CR2 register. The SCL stretch is released by programming NBYTES to a non-zero value: the acknowledge or not-acknowledge is sent and next byte can be received.

NBYTES can be loaded with a value greater than 0x1, and in this case, the reception flow is continuous during NBYTES data reception.

Note: The SBC bit must be configured when the I2C is disabled, or when the slave is not addressed, or when ADDR=1.

The RELOAD bit value can be changed when ADDR=1, or when TCR=1.

Caution: Slave Byte Control mode is not compatible with NOSTRETCH mode. Setting SBC when NOSTRETCH=1 is not allowed.

Figure 394. Slave initialization flowchart

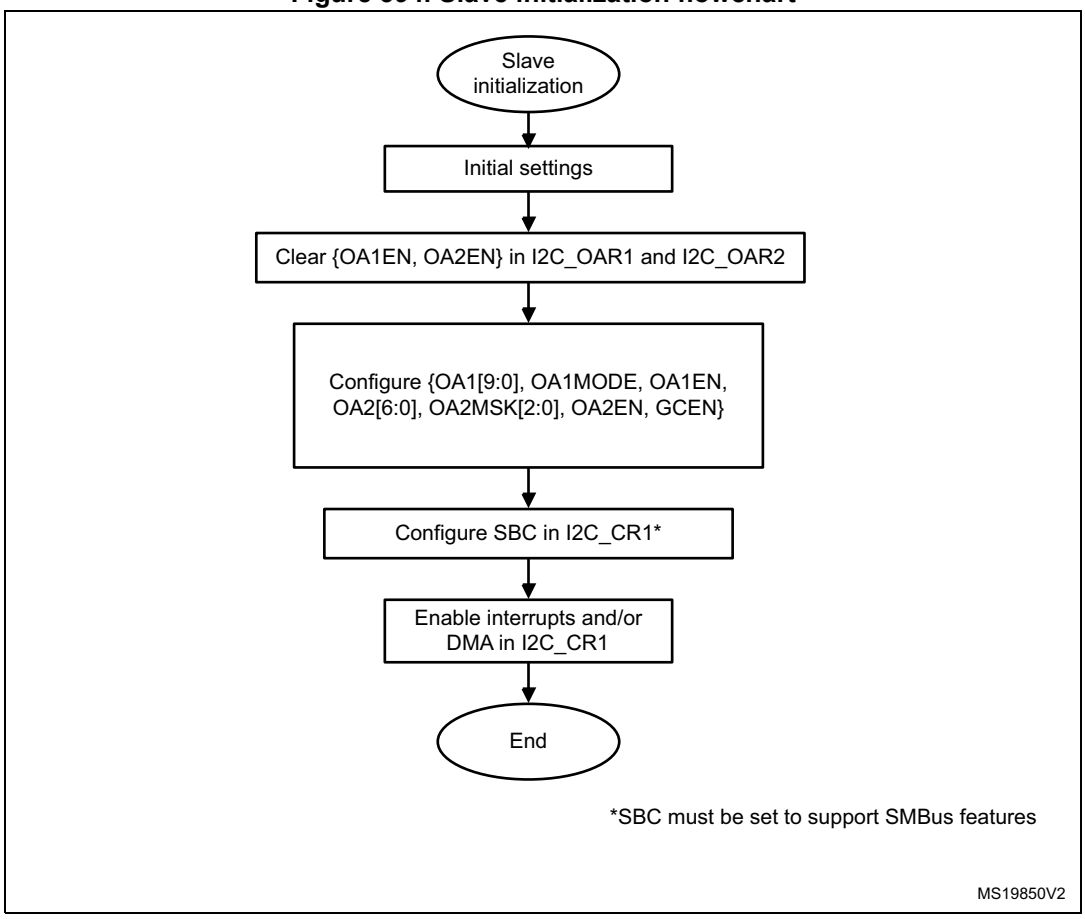

Slave transmitter

A transmit interrupt status (TXIS) is generated when the I2C_TXDR register becomes empty. An interrupt is generated if the TXIE bit is set in the I2C_CR1 register.

The TXIS bit is cleared when the I2C_TXDR register is written with the next data byte to be transmitted.

When a NACK is received, the NACKF bit is set in the I2C_ISR register and an interrupt is generated if the NACKIE bit is set in the I2C_CR1 register. The slave automatically releases the SCL and SDA lines in order to let the master perform a STOP or a RESTART condition. The TXIS bit is not set when a NACK is received.

When a STOP is received and the STOPIE bit is set in the I2C_CR1 register, the STOPF flag is set in the I2C_ISR register and an interrupt is generated. In most applications, the SBC bit is usually programmed to ‘0’. In this case, If TXE = 0 when the slave address is received (ADDR=1), the user can choose either to send the content of the I2C_TXDR register as the first data byte, or to flush the I2C_TXDR register by setting the TXE bit in order to program a new data byte.

In Slave Byte Control mode (SBC=1), the number of bytes to be transmitted must be programmed in NBYTES in the address match interrupt subroutine (ADDR=1). In this case, the number of TXIS events during the transfer corresponds to the value programmed in NBYTES.

Caution: When NOSTRETCH=1, the SCL clock is not stretched while the ADDR flag is set, so the user cannot flush the I2C_TXDR register content in the ADDR subroutine, in order to program the first data byte. The first data byte to be sent must be previously programmed in the I2C_TXDR register:

- This data can be the data written in the last TXIS event of the previous transmission message.
- If this data byte is not the one to be sent, the I2C_TXDR register can be flushed by setting the TXE bit in order to program a new data byte. The STOPF bit must be cleared only after these actions, in order to guarantee that they are executed before the first data transmission starts, following the address acknowledge.

  If STOPF is still set when the first data transmission starts, an underrun error is generated (the OVR flag is set).

  If a TXIS event is needed, (Transmit Interrupt or Transmit DMA request), the user must set the TXIS bit in addition to the TXE bit, in order to generate a TXIS event.

Figure 395. Transfer sequence flowchart for I2C slave transmitter, NOSTRETCH= 0

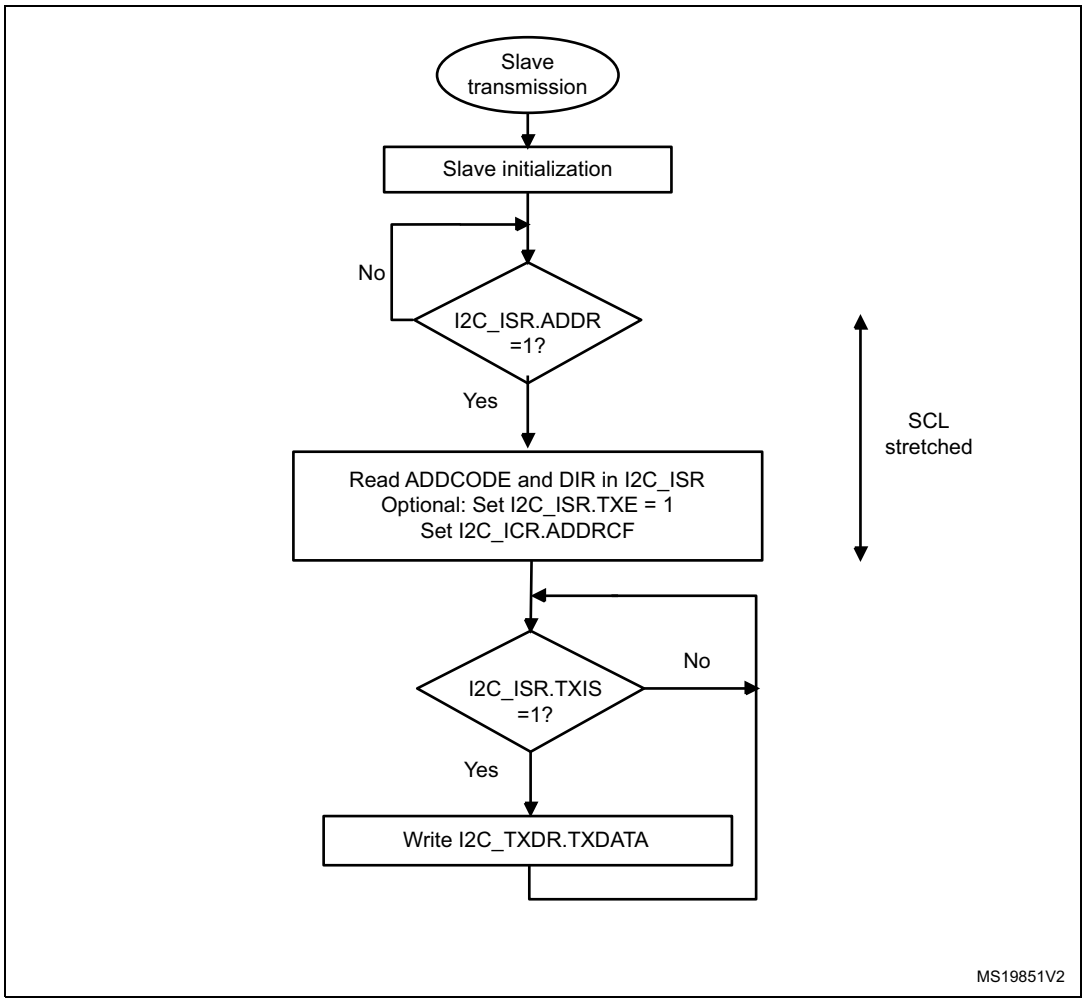

Figure 396. Transfer sequence flowchart for I2C slave transmitter, NOSTRETCH= 1

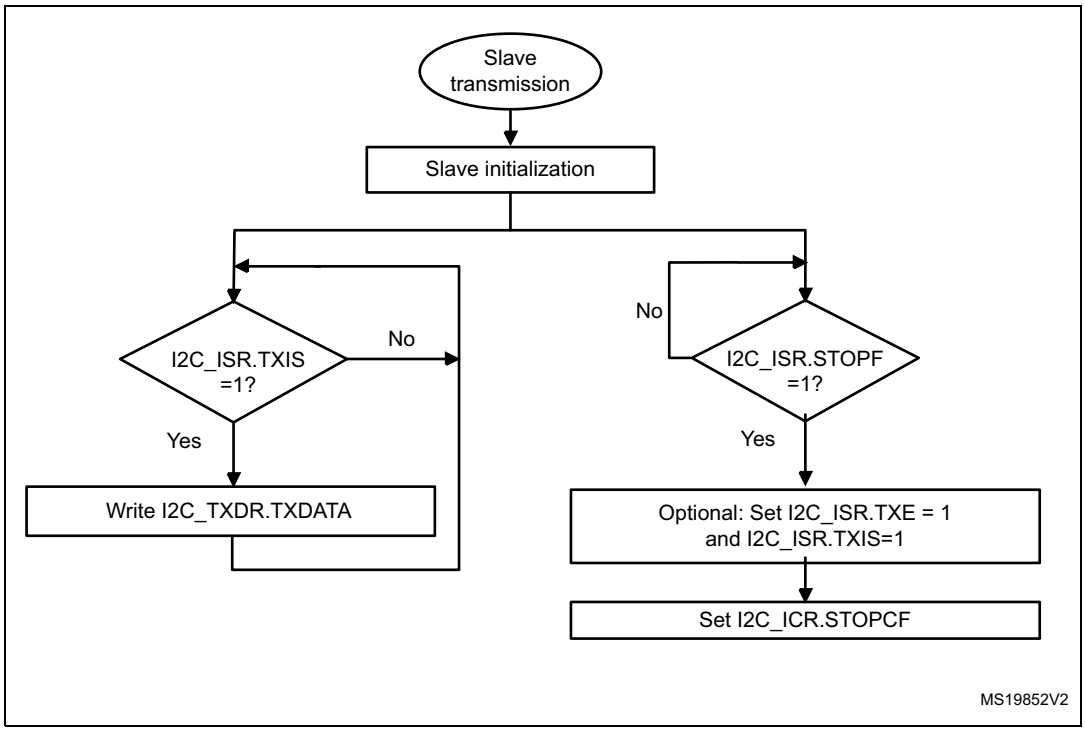

Figure 397. Transfer bus diagrams for I2C slave transmitter

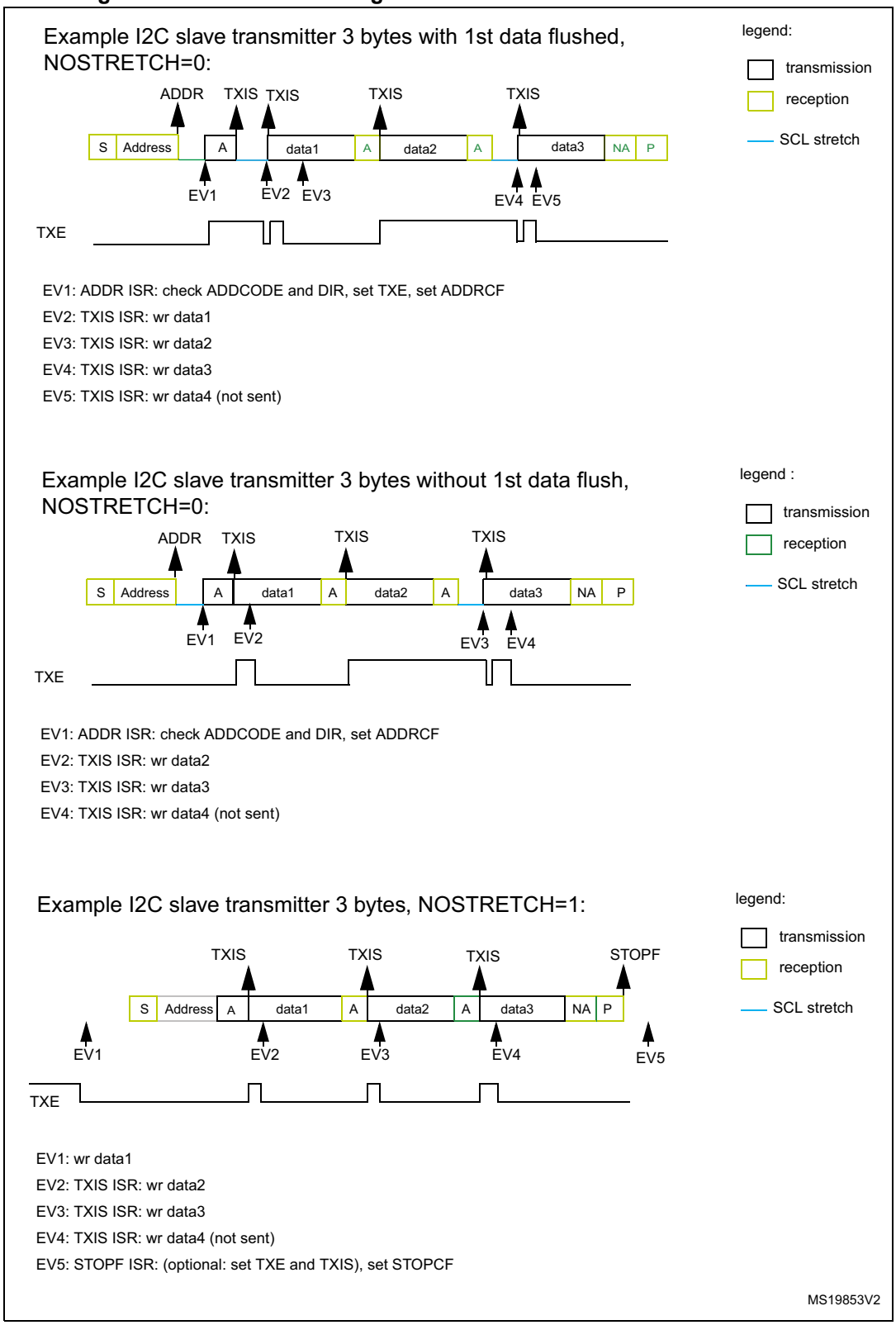

Slave receiver

RXNE is set in I2C_ISR when the I2C_RXDR is full, and generates an interrupt if RXIE is set in I2C_CR1. RXNE is cleared when I2C_RXDR is read.

When a STOP is received and STOPIE is set in I2C_CR1, STOPF is set in I2C_ISR and an interrupt is generated.

Figure 398. Transfer sequence flowchart for slave receiver with NOSTRETCH=0

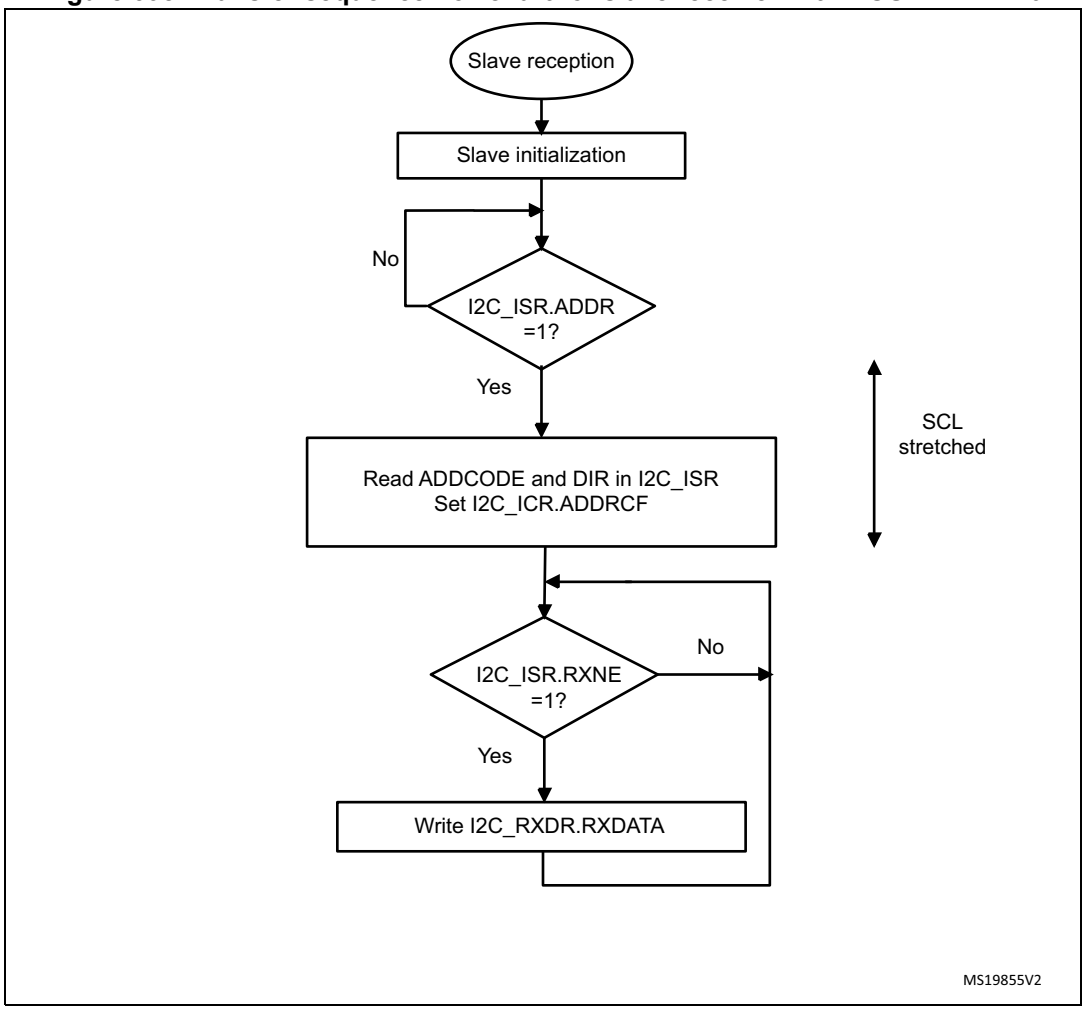

Figure 399. Transfer sequence flowchart for slave receiver with NOSTRETCH=1

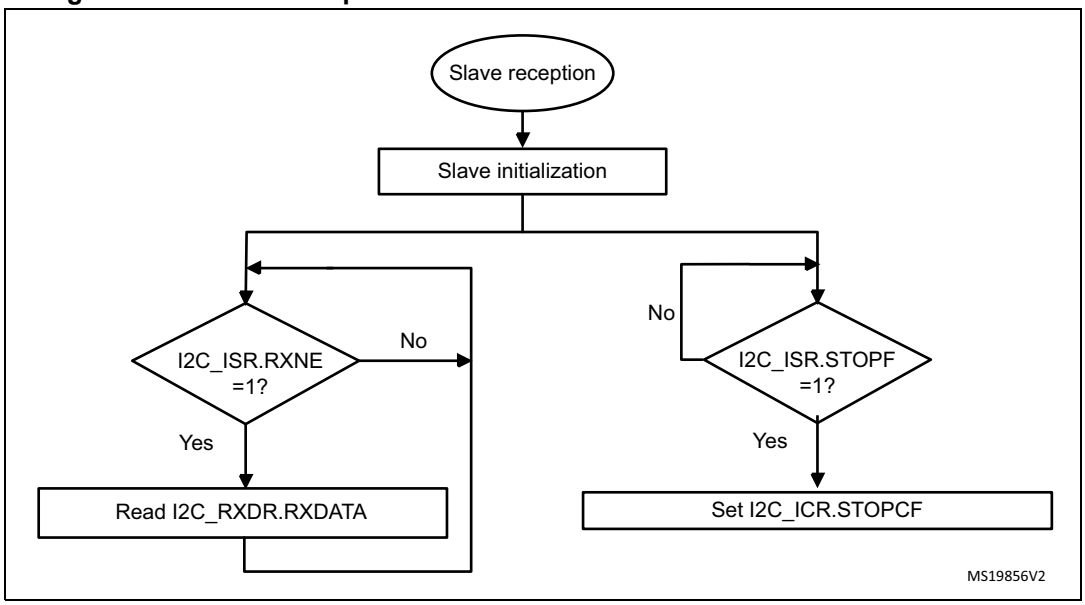

Figure 400. Transfer bus diagrams for I2C slave receiver

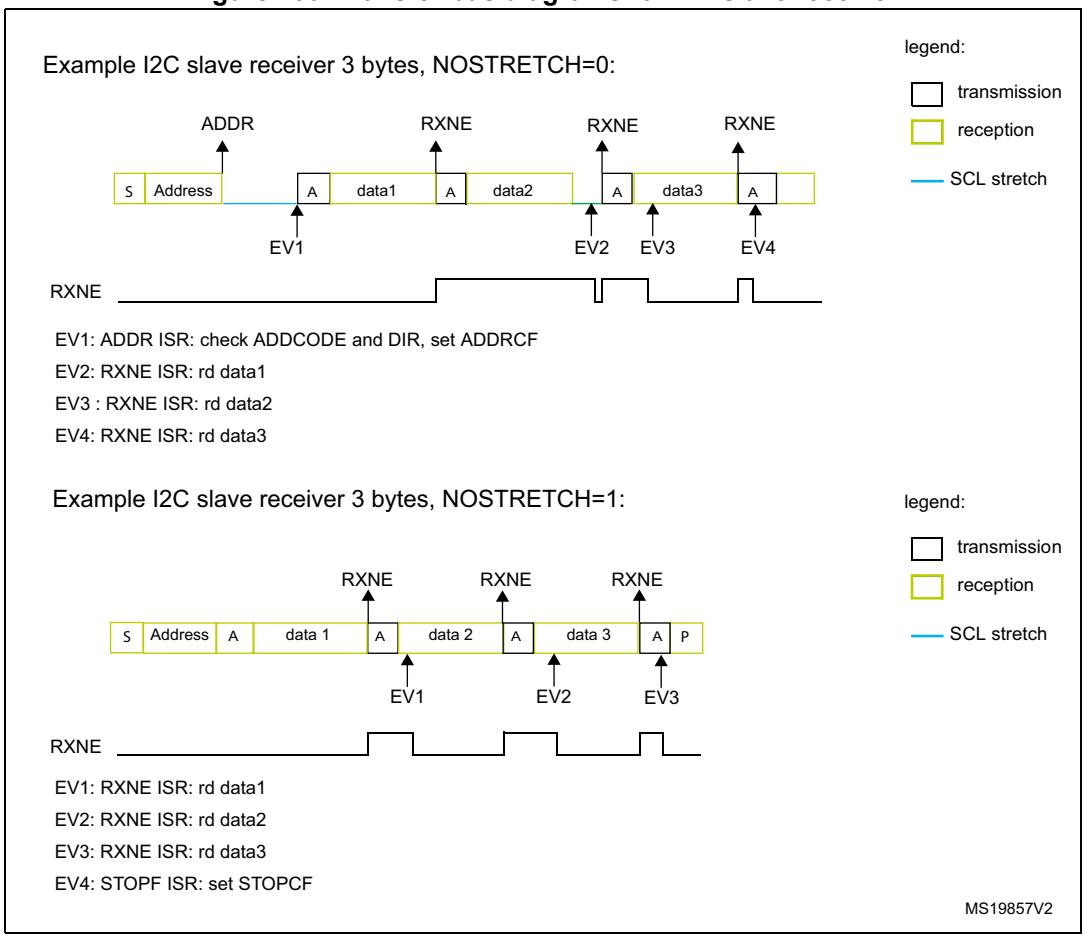

39.4.9 I2C master mode

I2C master initialization

Before enabling the peripheral, the I2C master clock must be configured by setting the SCLH and SCLL bits in the I2C_TIMINGR register.

The STM32CubeMX tool calculates and provides the I2C_TIMINGR content in the I2C Configuration window.

A clock synchronization mechanism is implemented in order to support multi-master environment and slave clock stretching.

In order to allow clock synchronization:

- The low level of the clock is counted using the SCLL counter, starting from the SCL low level internal detection.
- The high level of the clock is counted using the SCLH counter, starting from the SCL high level internal detection.

The I2C detects its own SCL low level after a t_{SYNC1} delay depending on the SCL falling edge, SCL input noise filters (analog + digital) and SCL synchronization to the I2CxCLK clock. The I2C releases SCL to high level once the SCLL counter reaches the value programmed in the SCLL[7:0] bits in the I2C_TIMINGR register.

The I2C detects its own SCL high level after a t_{SYNC2} delay depending on the SCL rising edge, SCL input noise filters (analog + digital) and SCL synchronization to I2CxCLK clock. The I2C ties SCL to low level once the SCLH counter is reached reaches the value programmed in the SCLH[7:0] bits in the I2C_TIMINGR register.

Consequently the master clock period is:

$t_{SCL} = t_{SYNC1} + t_{SYNC2} + \{[(SCLH+1) + (SCLL+1)] \times (PRESC+1) \times t_{I2CCLK}\}$

The duration of t_{SYNC1} depends on these parameters:

- SCL falling slope
- When enabled, input delay induced by the analog filter.
- When enabled, input delay induced by the digital filter: DNF x t_{I2CCLK}
- Delay due to SCL synchronization with I2CCLK clock (2 to 3 I2CCLK periods)

The duration of t_{SYNC2} depends on these parameters:

- SCL rising slope
- When enabled, input delay induced by the analog filter.
- When enabled, input delay induced by the digital filter: DNF x t_{I2CCLK}
- Delay due to SCL synchronization with I2CCLK clock (2 to 3 I2CCLK periods)

Figure 401. Master clock generation

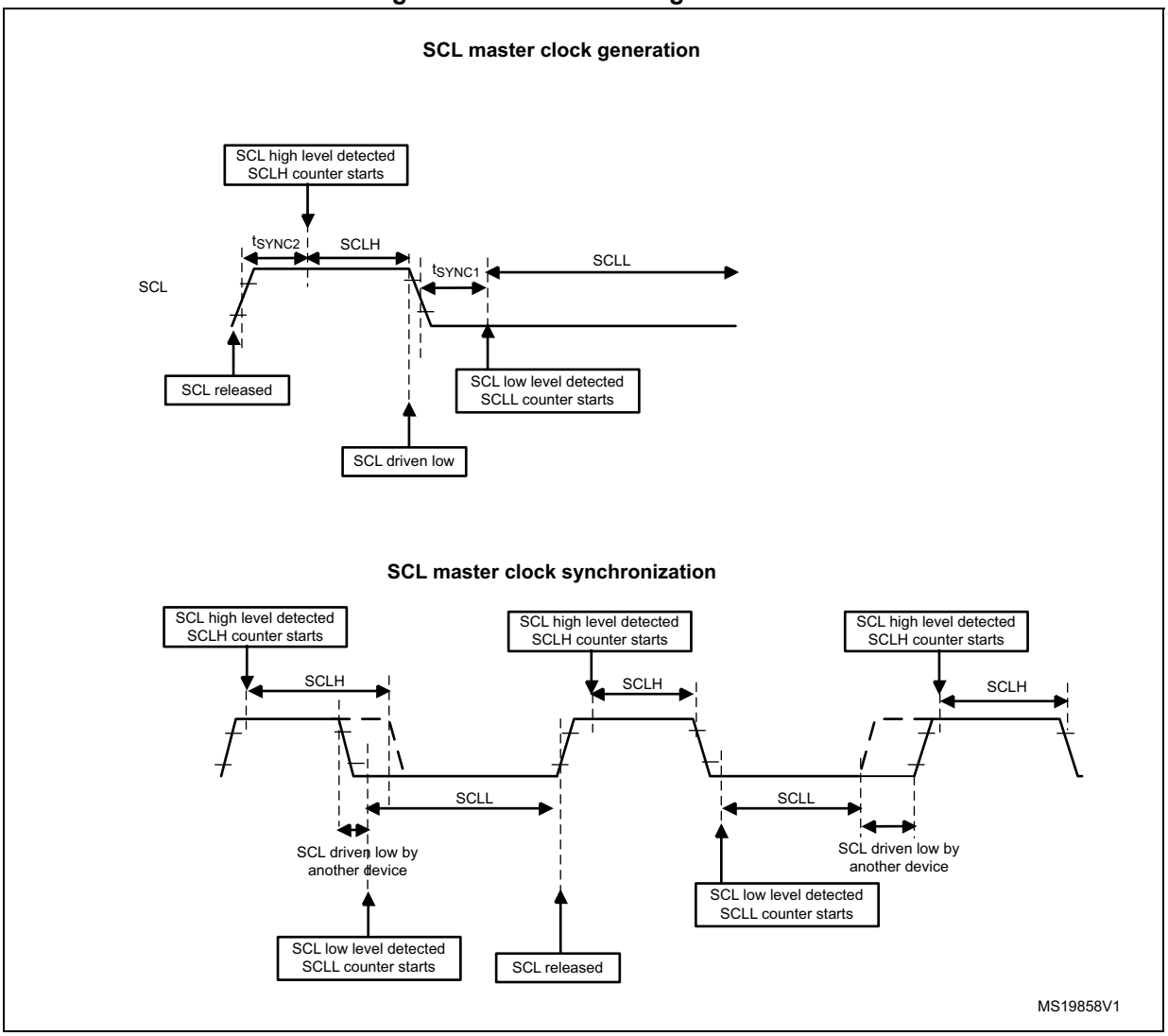

Caution: In order to be I^2C or SMBus compliant, the master clock must respect the timings given below:

Table 234. I²C-SMBus specification clock timings

Symbol	Parameter	Standard-mode (Sm)		Fast-mode (Fm)		Fast-mode Plus (Fm+)		SMBus		Unit
		Min	Max	Min	Max	Min	Max	Min	Max	
f_{SCL}	SCL clock frequency	-	100	-	400	-	1000	-	100	kHz
$t_{HD:STA}$	Hold time (repeated) START condition	4.0	-	0.6	-	0.26	-	4.0	-	µs
$t_{SU:STA}$	Set-up time for a repeated START condition	4.7	-	0.6	-	0.26	-	4.7	-	µs
$t_{SU:STO}$	Set-up time for STOP condition	4.0	-	0.6	-	0.26	-	4.0	-	µs
t_{BUF}	Bus free time between a STOP and START condition	4.7	-	1.3	-	0.5	-	4.7	-	µs
t_{LOW}	Low period of the SCL clock	4.7	-	1.3	-	0.5	-	4.7	-	µs
t_{HIGH}	Period of the SCL clock	4.0	-	0.6	-	0.26	-	4.0	50	µs
t_r	Rise time of both SDA and SCL signals	-	1000	-	300	-	120	-	1000	ns
t_f	Fall time of both SDA and SCL signals	-	300	-	300	-	120	-	300	ns

Note: SCLL is also used to generate the t_{BUF} and $t_{SU:STA}$ timings.

SCLH is also used to generate the $t_{HD:STA}$ and $t_{SU:STO}$ timings.

Refer to *Section 39.4.10: I2C_TIMINGR register configuration examples* for examples of I2C_TIMINGR settings vs. I2CCLK frequency.

Master communication initialization (address phase)

In order to initiate the communication, the user must program the following parameters for the addressed slave in the I2C_CR2 register:

- Addressing mode (7-bit or 10-bit): ADD10
- Slave address to be sent: SADD[9:0]
- Transfer direction: RD_WRN
- In case of 10-bit address read: HEAD10R bit. HEAD10R must be configure to indicate if the complete address sequence must be sent, or only the header in case of a direction change.
- The number of bytes to be transferred: NBYTES[7:0]. If the number of bytes is equal to or greater than 255 bytes, NBYTES[7:0] must initially be filled with 0xFF.

The user must then set the START bit in I2C_CR2 register. Changing all the above bits is not allowed when START bit is set.

Then the master automatically sends the START condition followed by the slave address as soon as it detects that the bus is free (BUSY = 0) and after a delay of t_{BUF}.

In case of an arbitration loss, the master automatically switches back to slave mode and can acknowledge its own address if it is addressed as a slave.

Note: The START bit is reset by hardware when the slave address has been sent on the bus, whatever the received acknowledge value. The START bit is also reset by hardware if an arbitration loss occurs.
In 10-bit addressing mode, when the Slave Address first 7 bits is NACKed by the slave, the

master re-launches automatically the slave address transmission until ACK is received. In this case ADDRCF must be set if a NACK is received from the slave, in order to stop sending the slave address.
If the I2C is addressed as a slave (ADDR=1) while the START bit is set, the I2C switches to slave mode and the START bit is cleared, when the ADDRCF bit is set.

Note: The same procedure is applied for a Repeated Start condition. In this case BUSY=1.

Figure 402. Master initialization flowchart

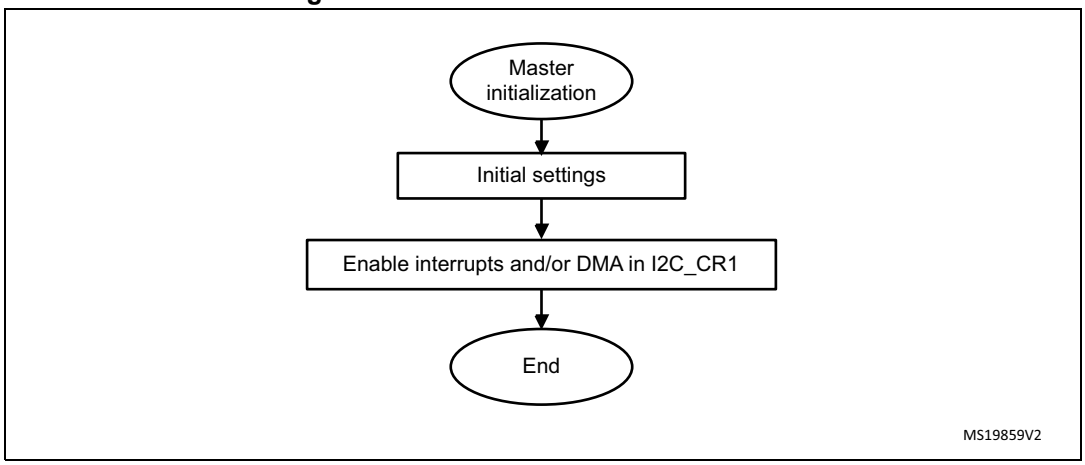

Initialization of a master receiver addressing a 10-bit address slave

- If the slave address is in 10-bit format, the user can choose to send the complete read sequence by clearing the HEAD10R bit in the I2C_CR2 register. In this case the master automatically sends the following complete sequence after the START bit is set: (Re)Start + Slave address 10-bit header Write + Slave address 2nd byte + REStart + Slave address 10-bit header Read

Figure 403. 10-bit address read access with HEAD10R=0

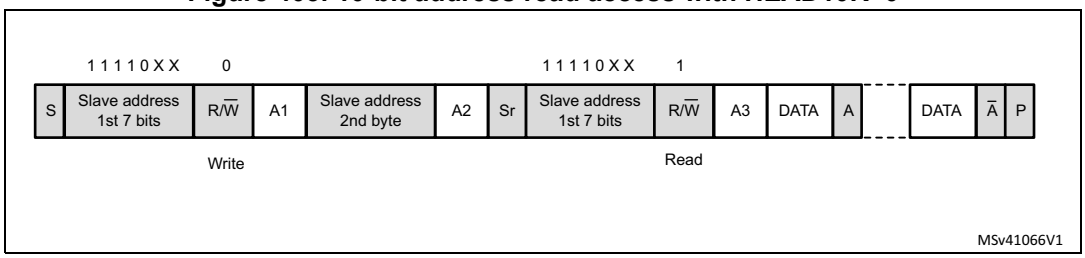

- If the master addresses a 10-bit address slave, transmits data to this slave and then reads data from the same slave, a master transmission flow must be done first. Then a repeated start is set with the 10 bit slave address configured with HEAD10R=1. In this case the master sends this sequence: ReStart + Slave address 10-bit header Read.

Figure 404. 10-bit address read access with HEAD10R=1

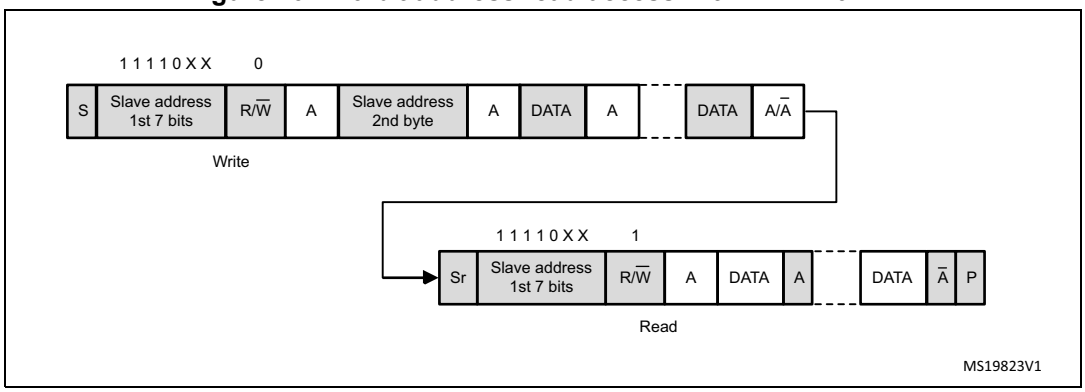

Master transmitter

In the case of a write transfer, the TXIS flag is set after each byte transmission, after the 9th SCL pulse when an ACK is received.

A TXIS event generates an interrupt if the TXIE bit is set in the I2C_CR1 register. The flag is cleared when the I2C_TXDR register is written with the next data byte to be transmitted.

The number of TXIS events during the transfer corresponds to the value programmed in NBYTES[7:0]. If the total number of data bytes to be sent is greater than 255, reload mode must be selected by setting the RELOAD bit in the I2C_CR2 register. In this case, when NBYTES data have been transferred, the TCR flag is set and the SCL line is stretched low until NBYTES[7:0] is written to a non-zero value.

The TXIS flag is not set when a NACK is received.

- When RELOAD=0 and NBYTES data have been transferred:
  - In automatic end mode (AUTOEND=1), a STOP is automatically sent.
  - In software end mode (AUTOEND=0), the TC flag is set and the SCL line is stretched low in order to perform software actions:

    A RESTART condition can be requested by setting the START bit in the I2C_CR2 register with the proper slave address configuration, and number of bytes to be transferred. Setting the START bit clears the TC flag and the START condition is sent on the bus.

    A STOP condition can be requested by setting the STOP bit in the I2C_CR2 register. Setting the STOP bit clears the TC flag and the STOP condition is sent on the bus.
- If a NACK is received: the TXIS flag is not set, and a STOP condition is automatically sent after the NACK reception. the NACKF flag is set in the I2C_ISR register, and an interrupt is generated if the NACKIE bit is set.

Figure 405. Transfer sequence flowchart for I2C master transmitter for N≤255 bytes

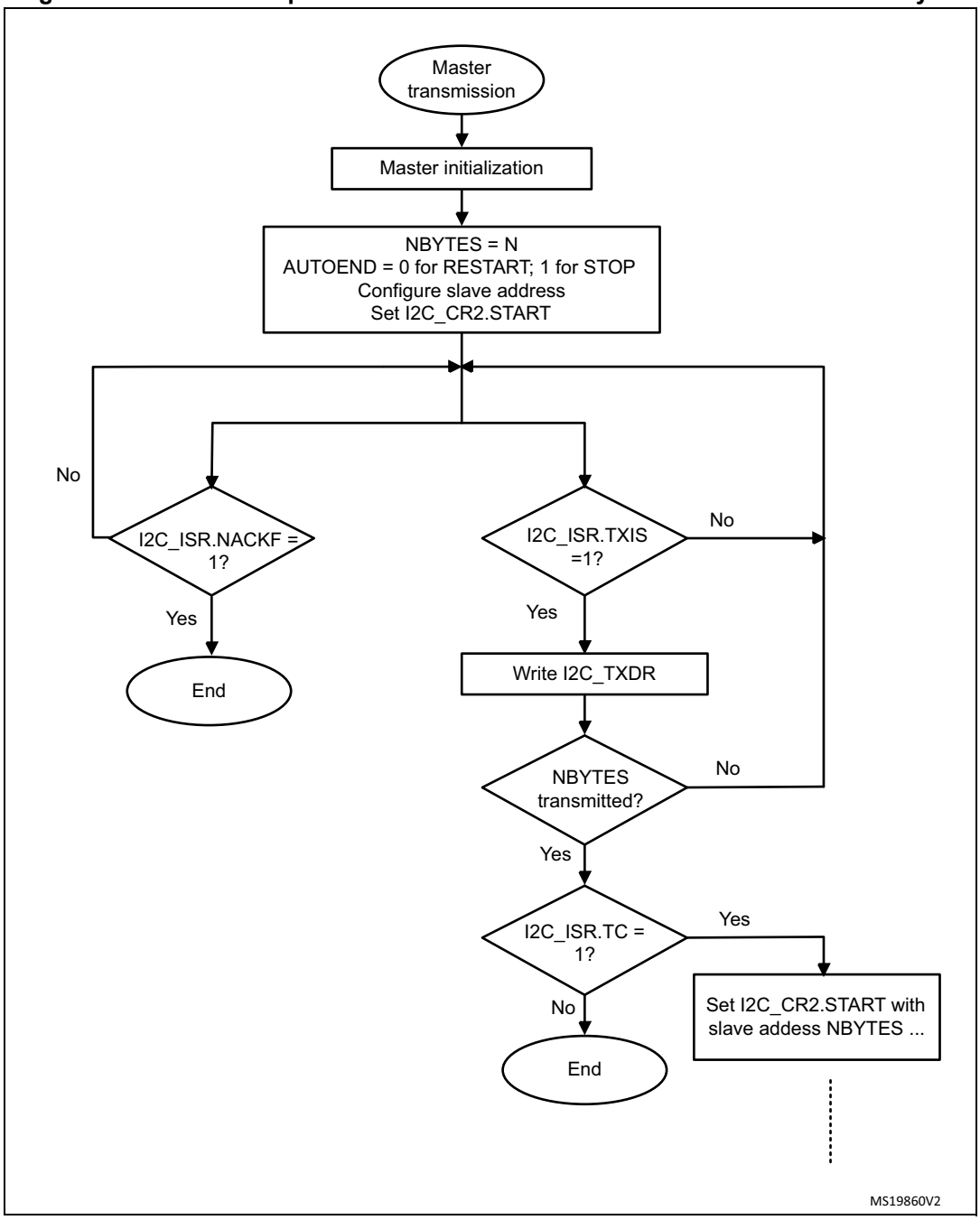

Figure 406. Transfer sequence flowchart for I2C master transmitter for N>255 bytes

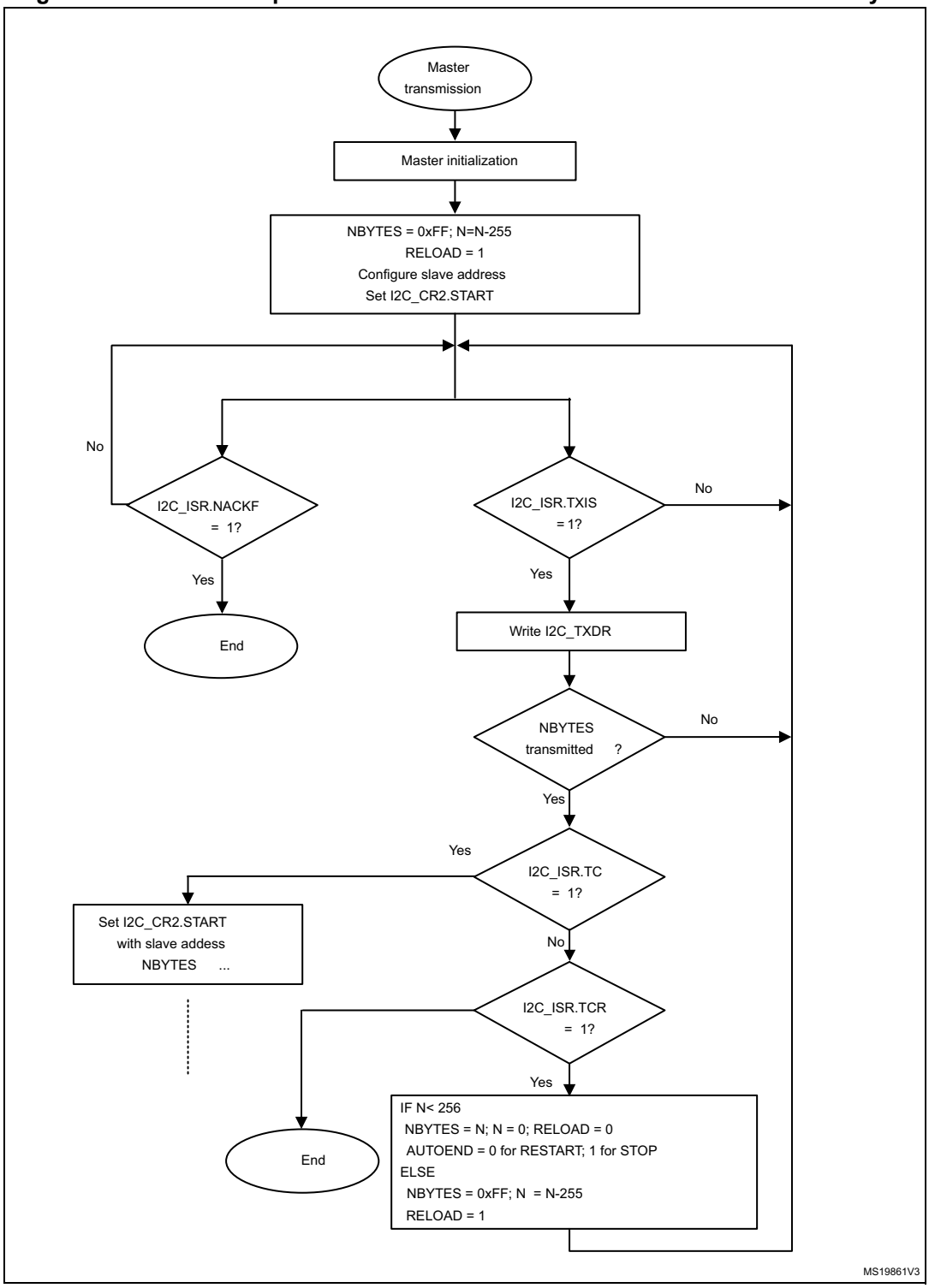

Figure 407. Transfer bus diagrams for I2C master transmitter

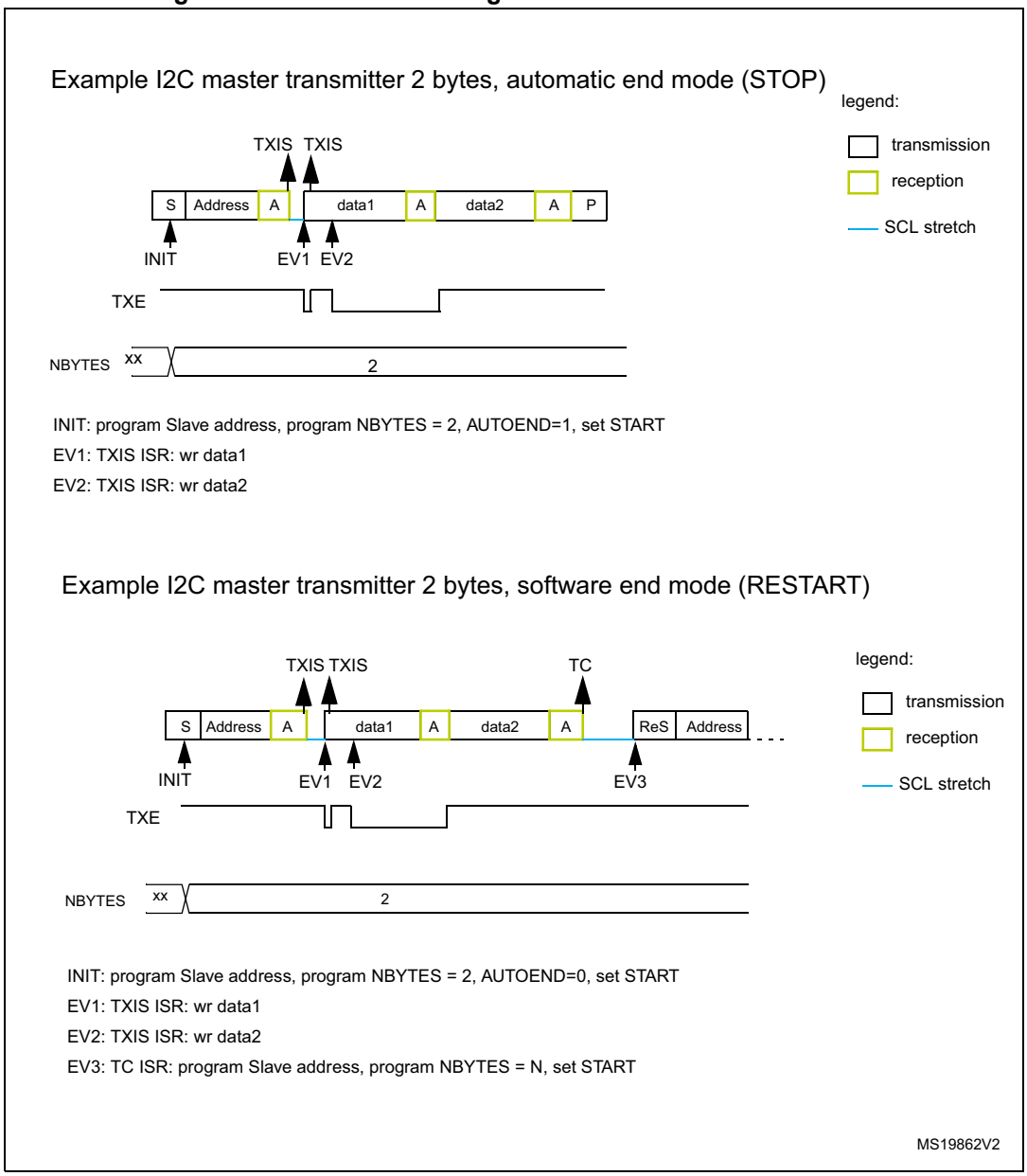

Master receiver

In the case of a read transfer, the RXNE flag is set after each byte reception, after the 8th SCL pulse. An RXNE event generates an interrupt if the RXIE bit is set in the I2C_CR1 register. The flag is cleared when I2C_RXDR is read.

If the total number of data bytes to be received is greater than 255, reload mode must be selected by setting the RELOAD bit in the I2C_CR2 register. In this case, when NBYTES[7:0] data have been transferred, the TCR flag is set and the SCL line is stretched low until NBYTES[7:0] is written to a non-zero value.

- When RELOAD=0 and NBYTES[7:0] data have been transferred:
  - In automatic end mode (AUTOEND=1), a NACK and a STOP are automatically sent after the last received byte.
  - In software end mode (AUTOEND=0), a NACK is automatically sent after the last received byte, the TC flag is set and the SCL line is stretched low in order to allow software actions:

    A RESTART condition can be requested by setting the START bit in the I2C_CR2 register with the proper slave address configuration, and number of bytes to be transferred. Setting the START bit clears the TC flag and the START condition, followed by slave address, are sent on the bus.

    A STOP condition can be requested by setting the STOP bit in the I2C_CR2 register. Setting the STOP bit clears the TC flag and the STOP condition is sent on the bus.

Figure 408. Transfer sequence flowchart for I2C master receiver for N≤255 bytes

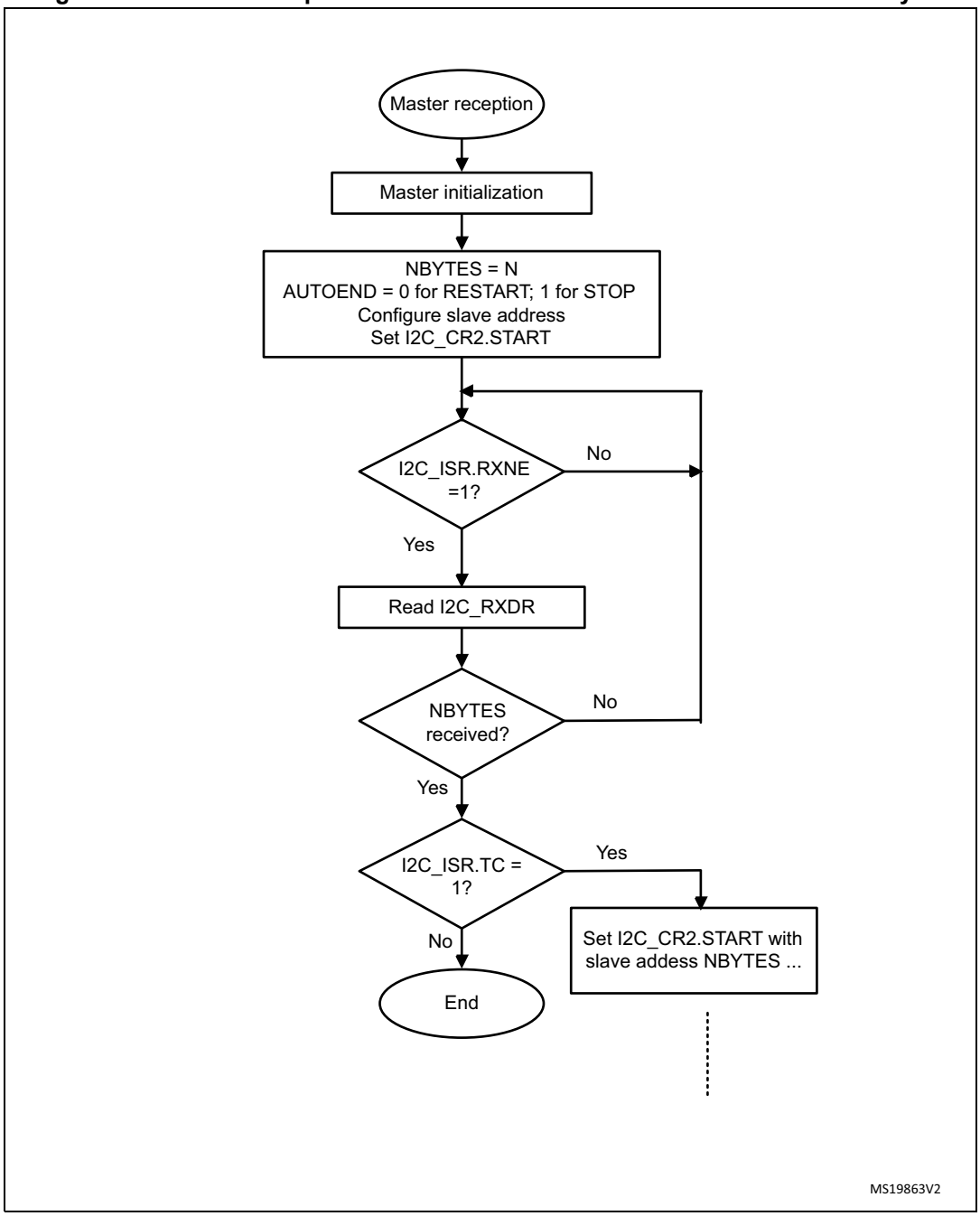

Figure 409. Transfer sequence flowchart for I2C master receiver for N >255 bytes

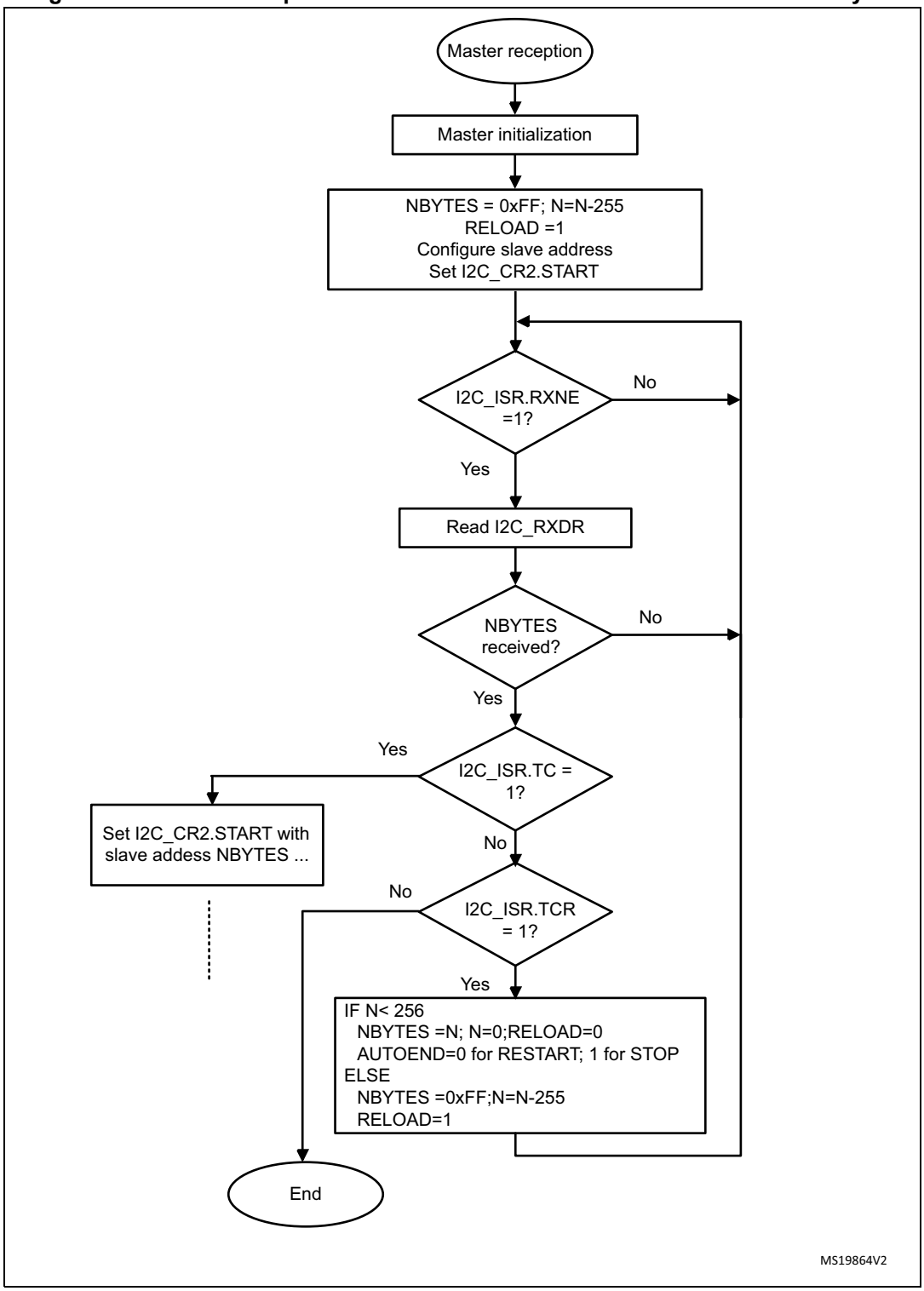

Figure 410. Transfer bus diagrams for I2C master receiver

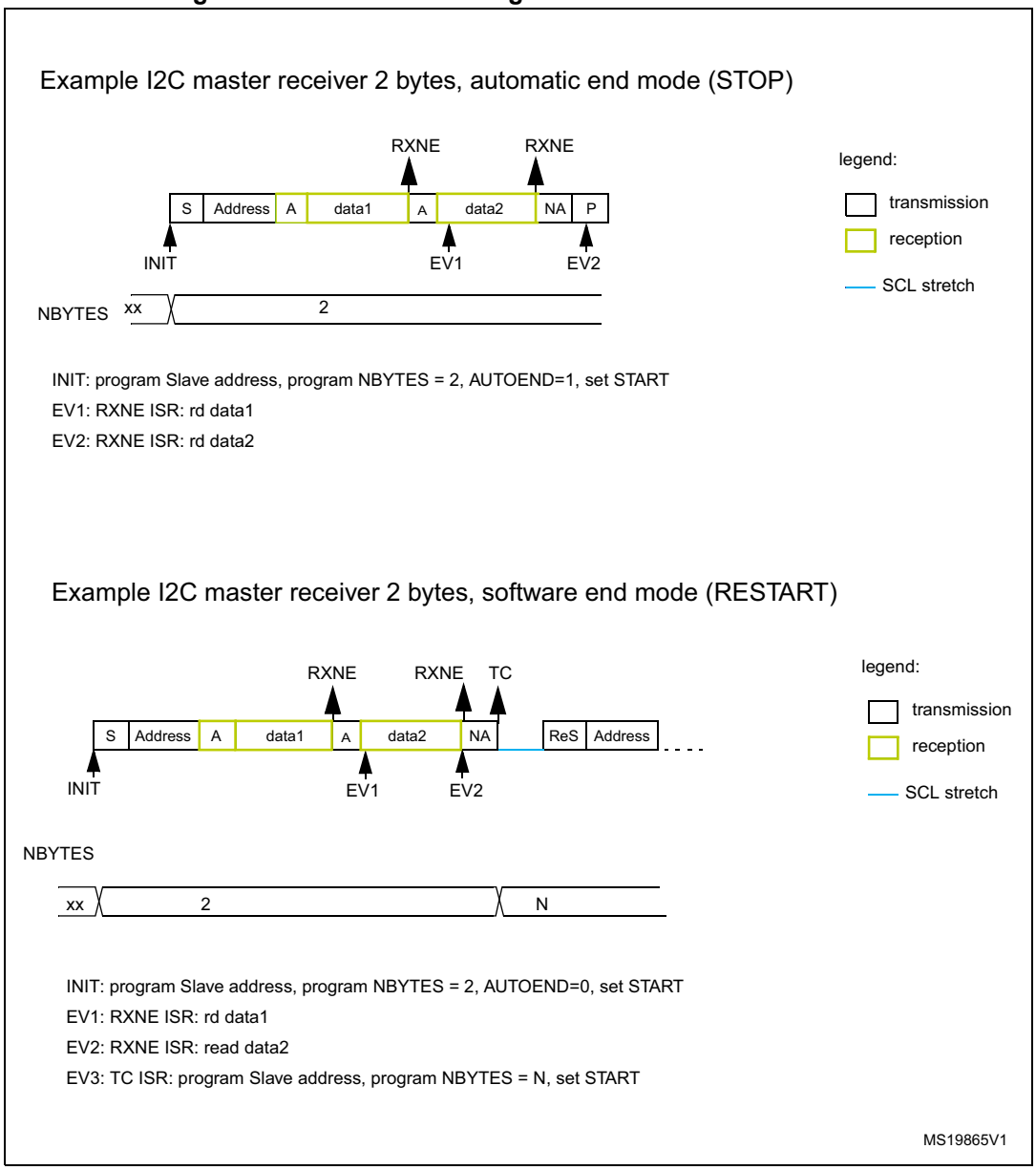

39.4.10 I2C_TIMINGR register configuration examples

The tables below provide examples of how to program the I2C_TIMINGR to obtain timings compliant with the I^2C specification. In order to get more accurate configuration values, the STM32CubeMX tool (I2C Configuration window) must be used.

Table 235. Examples of timing settings for f_{I2CCLK} = 8 MHz

Parameter	Standard-mode (Sm)		Fast-mode (Fm)	Fast-mode Plus (Fm+)
	10 kHz	100 kHz	400 kHz	500 kHz
PRESC	1	1	0	0
SCLL	0xC7	0x13	0x9	0x6
t_{SCLL}	200x250 ns = 50 µs	20x250 ns = 5.0 µs	10x125 ns = 1250 ns	7x125 ns = 875 ns
SCLH	0xC3	0xF	0x3	0x3
t_{SCLH}	196x250 ns = 49 µs	16x250 ns = 4.0µs	4x125 ns = 500 ns	4x125 ns = 500 ns
t_{SCL}(1)	~100 µs(2)	~10 µs(2)	~2500 ns(3)	~2000 ns(4)
SDADEL	0x2	0x2	0x1	0x0
t_{SDADEL}	2x250 ns = 500 ns	2x250 ns = 500 ns	1x125 ns = 125 ns	0 ns
SCLDEL	0x4	0x4	0x3	0x1
t_{SCLDEL}	5x250 ns = 1250 ns	5x250 ns = 1250 ns	4x125 ns = 500 ns	2x125 ns = 250 ns

1. SCL period t_{SCL} is greater than t_{SCLL} + t_{SCLH} due to SCL internal detection delay. Values provided for t_{SCL} are examples only.
2. t_{SYNC1} + t_{SYNC2} minimum value is 4 x t_{I2CCLK} = 500 ns. Example with t_{SYNC1} + t_{SYNC2} = 1000 ns.
3. t_{SYNC1} + t_{SYNC2} minimum value is 4 x t_{I2CCLK} = 500 ns. Example with t_{SYNC1} + t_{SYNC2} = 750 ns.
4. t_{SYNC1} + t_{SYNC2} minimum value is 4 x t_{I2CCLK} = 500 ns. Example with t_{SYNC1} + t_{SYNC2} = 655 ns.

Table 236. Examples of timings settings for f_{I2CCLK} = 16 MHz

Parameter	Standard-mode (Sm)		Fast-mode (Fm)	Fast-mode Plus (Fm+)
	10 kHz	100 kHz	400 kHz	1000 kHz
PRESC	3	3	1	0
SCLL	0xC7	0x13	0x9	0x4
t_{SCLL}	200 x 250 ns = 50 µs	20 x 250 ns = 5.0 µs	10 x 125 ns = 1250 ns	5 x 62.5 ns = 312.5 ns
SCLH	0xC3	0xF	0x3	0x2
t_{SCLH}	196 x 250 ns = 49 µs	16 x 250 ns = 4.0 µs	4 x 125 ns = 500 ns	3 x 62.5 ns = 187.5 ns
t_{SCL}(1)	~100 µs(2)	~10 µs(2)	~2500 ns(3)	~1000 ns(4)
SDADEL	0x2	0x2	0x2	0x0
t_{SDADEL}	2 x 250 ns = 500 ns	2 x 250 ns = 500 ns	2 x 125 ns = 250 ns	0 ns
SCLDEL	0x4	0x4	0x3	0x2
t_{SCLDEL}	5 x 250 ns = 1250 ns	5 x 250 ns = 1250 ns	4 x 125 ns = 500 ns	3 x 62.5 ns = 187.5 ns

1. SCL period t_{SCL} is greater than t_{SCLL} + t_{SCLH} due to SCL internal detection delay. Values provided for t_{SCL} are examples only.

2. $t_{SYNC1} + t_{SYNC2}$ minimum value is 4 x t_{I2CCLK} = 250 ns. Example with $t_{SYNC1} + t_{SYNC2}$ = 1000 ns.
3. $t_{SYNC1} + t_{SYNC2}$ minimum value is 4 x t_{I2CCLK} = 250 ns. Example with $t_{SYNC1} + t_{SYNC2}$ = 750 ns.
4. $t_{SYNC1} + t_{SYNC2}$ minimum value is 4 x t_{I2CCLK} = 250 ns. Example with $t_{SYNC1} + t_{SYNC2}$ = 500 ns.

Table 237. Examples of timings settings for f_{I2CCLK} = 48 MHz

Parameter	Standard-mode (Sm)		Fast-mode (Fm)	Fast-mode Plus (Fm+)
	10 kHz	100 kHz	400 kHz	1000 kHz
PRESC	0xB	0xB	5	5
SCLL	0xC7	0x13	0x9	0x3
t_{SCLL}	200 x 250 ns = 50 µs	20 x 250 ns = 5.0 µs	10 x 125 ns = 1250 ns	4 x 125 ns = 500 ns
SCLH	0xC3	0xF	0x3	0x1
t_{SCLH}	196 x 250 ns = 49 µs	16 x 250 ns = 4.0 µs	4 x 125 ns = 500 ns	2 x 125 ns = 250 ns
t_{SCL}(1)	~100 µs(2)	~10 µs(2)	~2500 ns(3)	~875 ns(4)
SDADEL	0x2	0x2	0x3	0x0
t_{SDADEL}	2 x 250 ns = 500 ns	2 x 250 ns = 500 ns	3 x 125 ns = 375 ns	0 ns
SCLDEL	0x4	0x4	0x3	0x1
t_{SCLDEL}	5 x 250 ns = 1250 ns	5 x 250 ns = 1250 ns	4 x 125 ns = 500 ns	2 x 125 ns = 250 ns

1. The SCL period t_{SCL} is greater than t_{SCLL} + t_{SCLH} due to the SCL internal detection delay. Values provided for t_{SCL} are only examples.
2. $t_{SYNC1} + t_{SYNC2}$ minimum value is 4x t_{I2CCLK} = 83.3 ns. Example with $t_{SYNC1} + t_{SYNC2}$ = 1000 ns
3. $t_{SYNC1} + t_{SYNC2}$ minimum value is 4x t_{I2CCLK} = 83.3 ns. Example with $t_{SYNC1} + t_{SYNC2}$ = 750 ns
4. $t_{SYNC1} + t_{SYNC2}$ minimum value is 4x t_{I2CCLK} = 83.3 ns. Example with $t_{SYNC1} + t_{SYNC2}$ = 250 ns

39.4.11 SMBus specific features

This section is relevant only when SMBus feature is supported. Refer to *Section 39.3: I2C implementation*.

Introduction

The System Management Bus (SMBus) is a two-wire interface through which various devices can communicate with each other and with the rest of the system. It is based on I^2C principles of operation. SMBus provides a control bus for system and power management related tasks.

This peripheral is compatible with the SMBus specification (http://smbus.org).

The System Management Bus Specification refers to three types of devices.

- A slave is a device that receives or responds to a command.
- A master is a device that issues commands, generates the clocks and terminates the transfer.
- A host is a specialized master that provides the main interface to the system's CPU. A host must be a master-slave and must support the SMBus host notify protocol. Only one host is allowed in a system.

This peripheral can be configured as master or slave device, and also as a host.

Bus protocols

There are eleven possible command protocols for any given device. A device may use any or all of the eleven protocols to communicate. The protocols are Quick Command, Send Byte, Receive Byte, Write Byte, Write Word, Read Byte, Read Word, Process Call, Block Read, Block Write and Block Write-Block Read Process Call. These protocols should be implemented by the user software.

For more details of these protocols, refer to SMBus specification (http://smbus.org).

Address resolution protocol (ARP)

SMBus slave address conflicts can be resolved by dynamically assigning a new unique address to each slave device. In order to provide a mechanism to isolate each device for the purpose of address assignment each device must implement a unique device identifier (UDID). This 128-bit number is implemented by software.

This peripheral supports the Address Resolution Protocol (ARP). The SMBus Device Default Address (0b1100 001) is enabled by setting SMBDEN bit in I2C_CR1 register. The ARP commands should be implemented by the user software.

Arbitration is also performed in slave mode for ARP support.

For more details of the SMBus Address Resolution Protocol, refer to SMBus specification (http://smbus.org).

Received Command and Data acknowledge control

A SMBus receiver must be able to NACK each received command or data. In order to allow the ACK control in slave mode, the Slave Byte Control mode must be enabled by setting SBC bit in I2C_CR1 register. Refer to *Slave Byte Control mode on page 1284* for more details.

Host Notify protocol

This peripheral supports the Host Notify protocol by setting the SMBHEN bit in the I2C_CR1 register. In this case the host acknowledges the SMBus Host Address (0b0001 000).

When this protocol is used, the device acts as a master and the host as a slave.

SMBus alert

The SMBus ALERT optional signal is supported. A slave-only device can signal the host through the SMBALERT# pin that it wants to talk. The host processes the interrupt and simultaneously accesses all SMBALERT# devices through the Alert Response Address (0b0001 100). Only the device(s) which pulled SMBALERT# low acknowledges the Alert Response Address.

When configured as a slave device(SMBHEN=0), the SMBA pin is pulled low by setting the ALERTEN bit in the I2C_CR1 register. The Alert Response Address is enabled at the same time.

When configured as a host (SMBHEN=1), the ALERT flag is set in the I2C_ISR register when a falling edge is detected on the SMBA pin and ALERTEN=1. An interrupt is generated if the ERRIE bit is set in the I2C_CR1 register. When ALERTEN=0, the ALERT line is considered high even if the external SMBA pin is low.

If the SMBus ALERT pin is not needed, the SMBA pin can be used as a standard GPIO if ALERTEN=0.

Packet error checking

A packet error checking mechanism has been introduced in the SMBus specification to improve reliability and communication robustness. Packet Error Checking is implemented by appending a Packet Error Code (PEC) at the end of each message transfer. The PEC is calculated by using the $C(x) = x_8 + x^2 + x + 1$ CRC-8 polynomial on all the message bytes (including addresses and read/write bits).

The peripheral embeds a hardware PEC calculator and allows a Not Acknowledge to be sent automatically when the received byte does not match with the hardware calculated PEC.

Timeouts

This peripheral embeds hardware timers in order to be compliant with the 3 timeouts defined in SMBus specification.

Table 238. SMBus timeout specifications

Symbol	Parameter	Limits		Unit
		Min	Max	
$t_{TIMEOUT}$	Detect clock low timeout	25	35	ms
$t_{LOW:SEXT}$(1)	Cumulative clock low extend time (slave device)	-	25	ms
$t_{LOW:MEXT}$(2)	Cumulative clock low extend time (master device)	-	10	ms

1. $t_{LOW:SEXT}$ is the cumulative time a given slave device is allowed to extend the clock cycles in one message from the initial START to the STOP. It is possible that, another slave device or the master also extends the clock causing the combined clock low extend time to be greater than $t_{LOW:SEXT}$. Therefore, this parameter is measured with the slave device as the sole target of a full-speed master.
2. $t_{LOW:MEXT}$ is the cumulative time a master device is allowed to extend its clock cycles within each byte of a message as defined from START-to-ACK, ACK-to-ACK, or ACK-to-STOP. It is possible that a slave device or another master also extends the clock causing the combined clock low time to be greater than $t_{LOW:MEXT}$ on a given byte. Therefore, this parameter is measured with a full speed slave device as the sole target of the master.

Figure 411. Timeout intervals for $t_{LOW:SEXT}$, $t_{LOW:MEXT}$

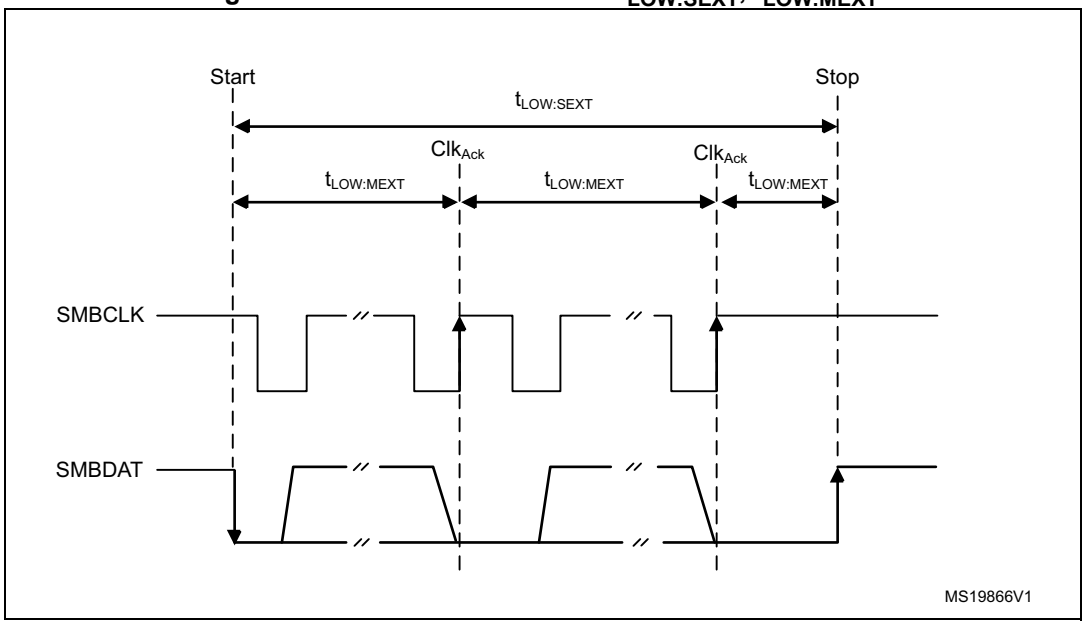

Bus idle detection

A master can assume that the bus is free if it detects that the clock and data signals have been high for t_{IDLE} greater than $t_{HIGH,MAX}$. (refer to *Table 232: I2C-SMBus specification data setup and hold times*)

This timing parameter covers the condition where a master has been dynamically added to the bus and may not have detected a state transition on the SMBCLK or SMBDAT lines. In this case, the master must wait long enough to ensure that a transfer is not currently in progress. The peripheral supports a hardware bus idle detection.

39.4.12 SMBus initialization

This section is relevant only when SMBus feature is supported. Refer to *Section 39.3: I2C implementation*.

In addition to I2C initialization, some other specific initialization must be done in order to perform SMBus communication:

Received Command and Data Acknowledge control (Slave mode)

A SMBus receiver must be able to NACK each received command or data. In order to allow ACK control in slave mode, the Slave Byte Control mode must be enabled by setting the SBC bit in the I2C_CR1 register. Refer to *Slave Byte Control mode on page 1284* for more details.

Specific address (Slave mode)

The specific SMBus addresses must be enabled if needed. Refer to *Bus idle detection on page 1307* for more details.

- The SMBus Device Default Address (0b1100 001) is enabled by setting the SMBDEN bit in the I2C_CR1 register.
- The SMBus Host Address (0b0001 000) is enabled by setting the SMBHEN bit in the I2C_CR1 register.
- The Alert Response Address (0b0001100) is enabled by setting the ALERTEN bit in the I2C_CR1 register.

Packet error checking

PEC calculation is enabled by setting the PECEN bit in the I2C_CR1 register. Then the PEC transfer is managed with the help of a hardware byte counter: NBYTES[7:0] in the I2C_CR2 register. The PECEN bit must be configured before enabling the I2C.

The PEC transfer is managed with the hardware byte counter, so the SBC bit must be set when interfacing the SMBus in slave mode. The PEC is transferred after NBYTES-1 data have been transferred when the PECBYTE bit is set and the RELOAD bit is cleared. If RELOAD is set, PECBYTE has no effect.

Caution: Changing the PECEN configuration is not allowed when the I2C is enabled.

Table 239. SMBus with PEC configuration

Mode	SBC bit	RELOAD bit	AUTOEND bit	PECBYTE bit
Master Tx/Rx NBYTES + PEC+ STOP	x	0	1	1
Master Tx/Rx NBYTES + PEC + ReSTART	x	0	0	1
Slave Tx/Rx with PEC	1	0	x	1

Timeout detection

The timeout detection is enabled by setting the TIMOUTEN and TEXTEN bits in the I2C_TIMEOUTR register. The timers must be programmed in such a way that they detect a timeout before the maximum time given in the SMBus specification.

- $t_{TIMEOUT}$ check

  In order to enable the $t_{TIMEOUT}$ check, the 12-bit TIMEOUTA[11:0] bits must be programmed with the timer reload value in order to check the $t_{TIMEOUT}$ parameter. The TIDLE bit must be configured to ‘0’ in order to detect the SCL low level timeout.

  Then the timer is enabled by setting the TIMOUTEN in the I2C_TIMEOUTR register.

  If SCL is tied low for a time greater than (TIMEOUTA+1) x 2048 x t_{I2CCLK}, the TIMEOUT flag is set in the I2C_ISR register.

  Refer to *Table 240: Examples of TIMEOUTA settings for various I2CCLK frequencies (max $t_{TIMEOUT}$ = 25 ms)*.

Caution: Changing the TIMEOUTA[11:0] bits and TIDLE bit configuration is not allowed when the TIMEOUTEN bit is set.

- $t_{LOW:SEXT}$ and $t_{LOW:MEXT}$ check

  Depending on if the peripheral is configured as a master or as a slave, The 12-bit TIMEOUTB timer must be configured in order to check $t_{LOW:SEXT}$ for a slave and

$t_{LOW:MEXT}$ for a master. As the standard specifies only a maximum, the user can choose the same value for the both.

Then the timer is enabled by setting the TEXTEN bit in the I2C_TIMEOUTR register.

If the SMBus peripheral performs a cumulative SCL stretch for a time greater than (TIMEOUTB+1) x 2048 x t_{I2CCLK}, and in the timeout interval described in *Bus idle detection on page 1307* section, the TIMEOUT flag is set in the I2C_ISR register.

Refer to *Table 241: Examples of TIMEOUTB settings for various I2CCLK frequencies*

Caution: Changing the TIMEOUTB configuration is not allowed when the TEXTEN bit is set.

Bus Idle detection

In order to enable the t_{IDLE} check, the 12-bit TIMEOUTA[11:0] field must be programmed with the timer reload value in order to obtain the t_{IDLE} parameter. The TIDLE bit must be configured to ‘1 in order to detect both SCL and SDA high level timeout.

Then the timer is enabled by setting the TIMOUTEN bit in the I2C_TIMEOUTR register.

If both the SCL and SDA lines remain high for a time greater than (TIMEOUTA+1) x 4 x t_{I2CCLK}, the TIMEOUT flag is set in the I2C_ISR register.

Refer to *Table 242: Examples of TIMEOUTA settings for various I2CCLK frequencies (max t_{IDLE} = 50 µs)*

Caution: Changing the TIMEOUTA and TIDLE configuration is not allowed when the TIMEOUTEN is set.

39.4.13 SMBus: I2C_TIMEOUTR register configuration examples

This section is relevant only when SMBus feature is supported. Refer to *Section 39.3: I2C implementation*.

- Configuring the maximum duration of $t_{TIMEOUT}$ to 25 ms:

Table 240. Examples of TIMEOUTA settings for various I2CCLK frequencies (max $t_{TIMEOUT}$ = 25 ms)

f_{I2CCLK}	TIMEOUTA[11:0] bits	TIDLE bit	TIMEOUTEN bit	$t_{TIMEOUT}$
8 MHz	0x61	0	1	98 x 2048 x 125 ns = 25 ms
16 MHz	0xC3	0	1	196 x 2048 x 62.5 ns = 25 ms
32 MHz	0x186	0	1	391 x 2048 x 31.25 ns = 25 ms
48 MHz	0x249	0	1	586 x 2048 x 20.08 ns = 25 ms

- Configuring the maximum duration of $t_{LOW:SEXT}$ and $t_{LOW:MEXT}$ to 8 ms:

Table 241. Examples of TIMEOUTB settings for various I2CCLK frequencies

f_{I2CCLK}	TIMEOUTB[11:0] bits	TEXTEN bit	$t_{LOW:EXT}$
8 MHz	0x1F	1	32 x 2048 x 125 ns = 8 ms
16 MHz	0x3F	1	64 x 2048 x 62.5 ns = 8 ms
48 MHz	0xBB	1	188 x 2048 x 20.08 ns = 8 ms

- Configuring the maximum duration of t_{IDLE} to 50 µs

Table 242. Examples of TIMEOUTA settings for various I2CCLK frequencies (max t_{IDLE} = 50 µs)

f_{I2CCLK}	TIMEOUTA[11:0] bits	TIDLE bit	TIMEOUTEN bit	t_{TIDLE}
8 MHz	0x63	1	1	100 x 4 x 125 ns = 50 µs
16 MHz	0xC7	1	1	200 x 4 x 62.5 ns = 50 µs
48 MHz	0x257	1	1	600 x 4 x 20.08 ns = 50 µs

39.4.14 SMBus slave mode

This section is relevant only when SMBus feature is supported. Refer to *Section 39.3: I2C implementation*.

In addition to I2C slave transfer management (refer to *Section 39.4.8: I2C slave mode*) some additional software flowcharts are provided to support SMBus.

SMBus Slave transmitter

When the IP is used in SMBus, SBC must be programmed to ‘1’ in order to allow the PEC transmission at the end of the programmed number of data bytes. When the PECBYTE bit is set, the number of bytes programmed in NBYTES[7:0] includes the PEC transmission. In that case the total number of TXIS interrupts is NBYTES-1 and the content of the I2C_PECR register is automatically transmitted if the master requests an extra byte after the NBYTES-1 data transfer.

Caution: The PECBYTE bit has no effect when the RELOAD bit is set.

Figure 412. Transfer sequence flowchart for SMBus slave transmitter N bytes + PEC

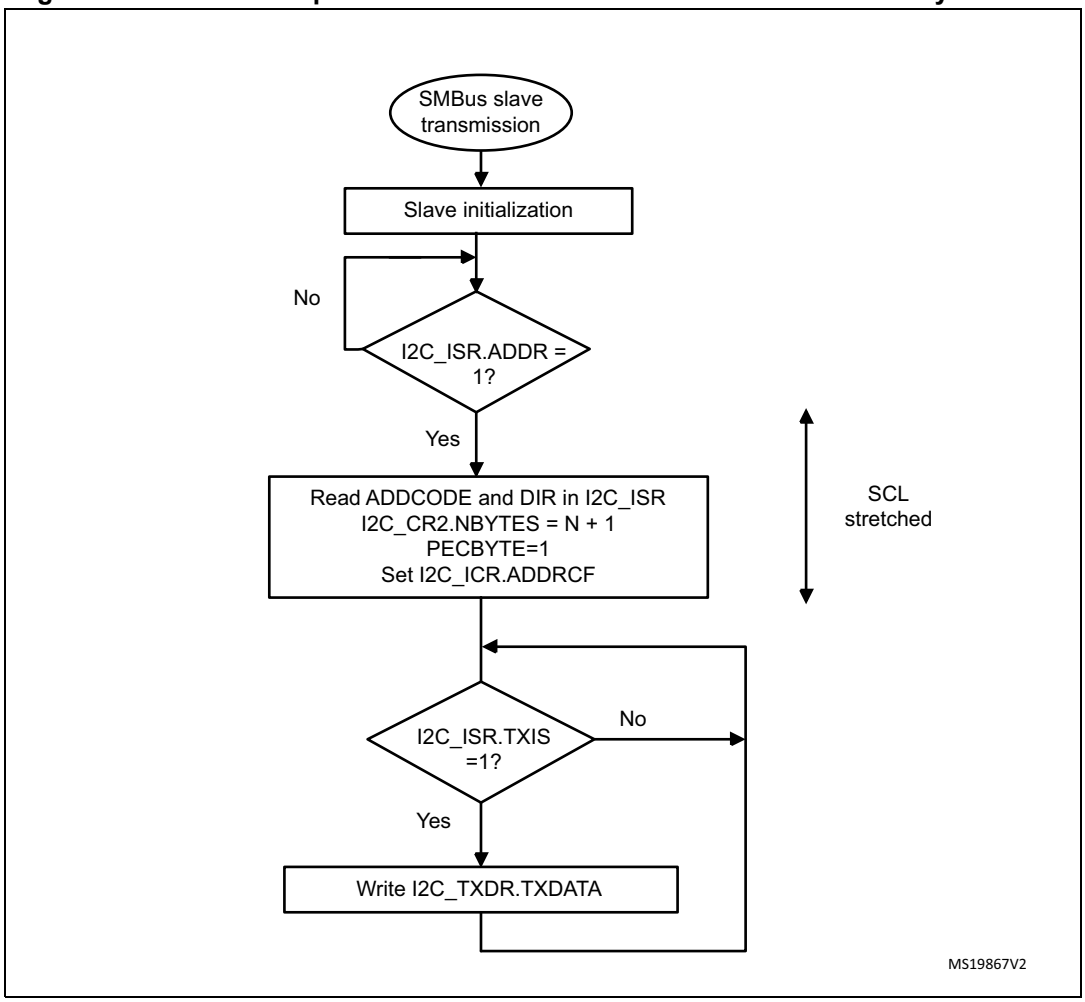

Figure 413. Transfer bus diagrams for SMBus slave transmitter (SBC=1)

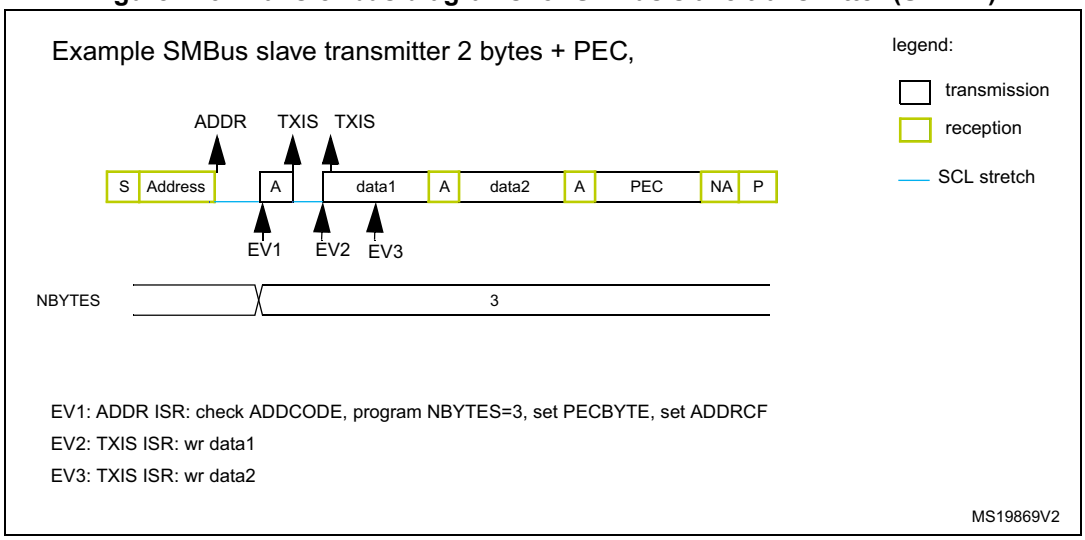

SMBus Slave receiver

When the I2C is used in SMBus mode, SBC must be programmed to '1' in order to allow the PEC checking at the end of the programmed number of data bytes. In order to allow the ACK control of each byte, the reload mode must be selected (RELOAD=1). Refer to *Slave Byte Control mode on page 1284* for more details.

In order to check the PEC byte, the RELOAD bit must be cleared and the PECBYTE bit must be set. In this case, after NBYTES-1 data have been received, the next received byte is compared with the internal I2C_PECR register content. A NACK is automatically generated if the comparison does not match, and an ACK is automatically generated if the comparison matches, whatever the ACK bit value. Once the PEC byte is received, it is copied into the I2C_RXDR register like any other data, and the RXNE flag is set.

In the case of a PEC mismatch, the PECERR flag is set and an interrupt is generated if the ERRIE bit is set in the I2C_CR1 register.

If no ACK software control is needed, the user can program PECBYTE=1 and, in the same write operation, program NBYTES with the number of bytes to be received in a continuous flow. After NBYTES-1 are received, the next received byte is checked as being the PEC.

Caution: The PECBYTE bit has no effect when the RELOAD bit is set.

Figure 414. Transfer sequence flowchart for SMBus slave receiver N Bytes + PEC

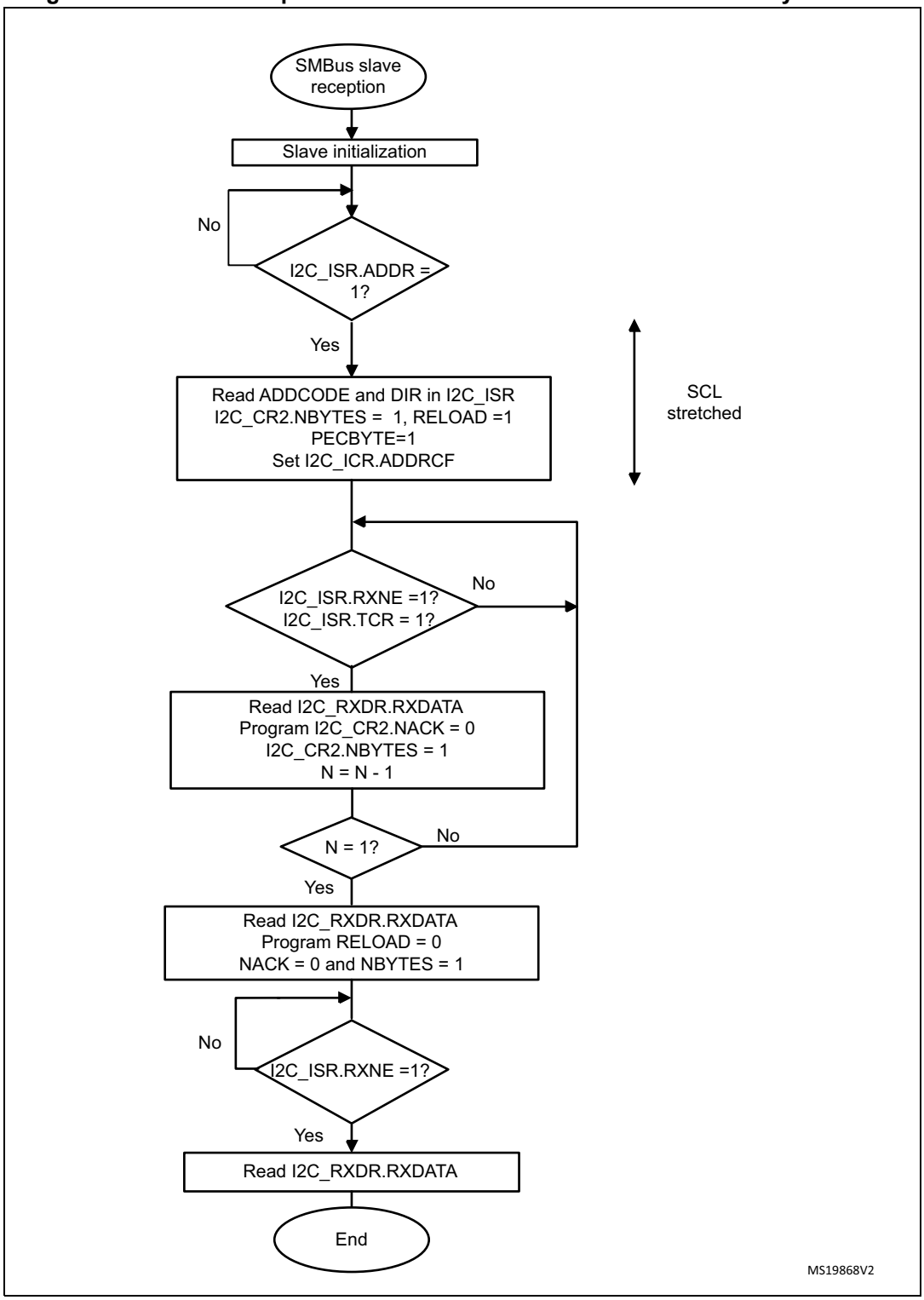

Figure 415. Bus transfer diagrams for SMBus slave receiver (SBC=1)

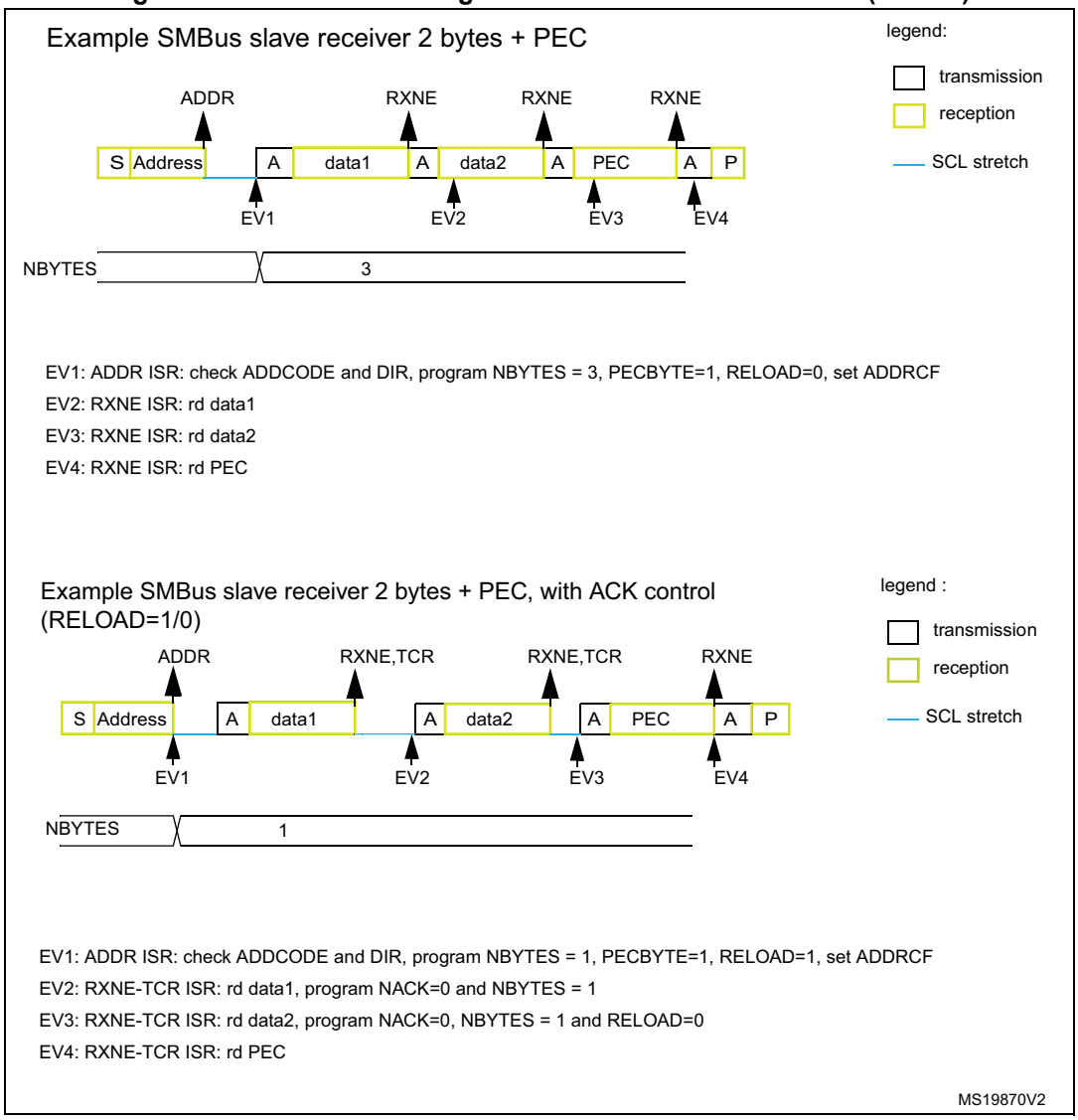

This section is relevant only when SMBus feature is supported. Refer to *Section 39.3: I2C implementation*.

In addition to I2C master transfer management (refer to *Section 39.4.9: I2C master mode*) some additional software flowcharts are provided to support SMBus.

SMBus Master transmitter

When the SMBus master wants to transmit the PEC, the PECBYTE bit must be set and the number of bytes must be programmed in the NBYTES[7:0] field, before setting the START bit. In this case the total number of TXIS interrupts is NBYTES-1. So if the PECBYTE bit is set when NBYTES=0x1, the content of the I2C_PECR register is automatically transmitted.

If the SMBus master wants to send a STOP condition after the PEC, automatic end mode must be selected (AUTOEND=1). In this case, the STOP condition automatically follows the PEC transmission.

When the SMBus master wants to send a RESTART condition after the PEC, software mode must be selected (AUTOEND=0). In this case, once NBYTES-1 have been transmitted, the I2C_PECR register content is transmitted and the TC flag is set after the PEC transmission, stretching the SCL line low. The RESTART condition must be programmed in the TC interrupt subroutine.

Caution: The PECBYTE bit has no effect when the RELOAD bit is set.

Figure 416. Bus transfer diagrams for SMBus master transmitter

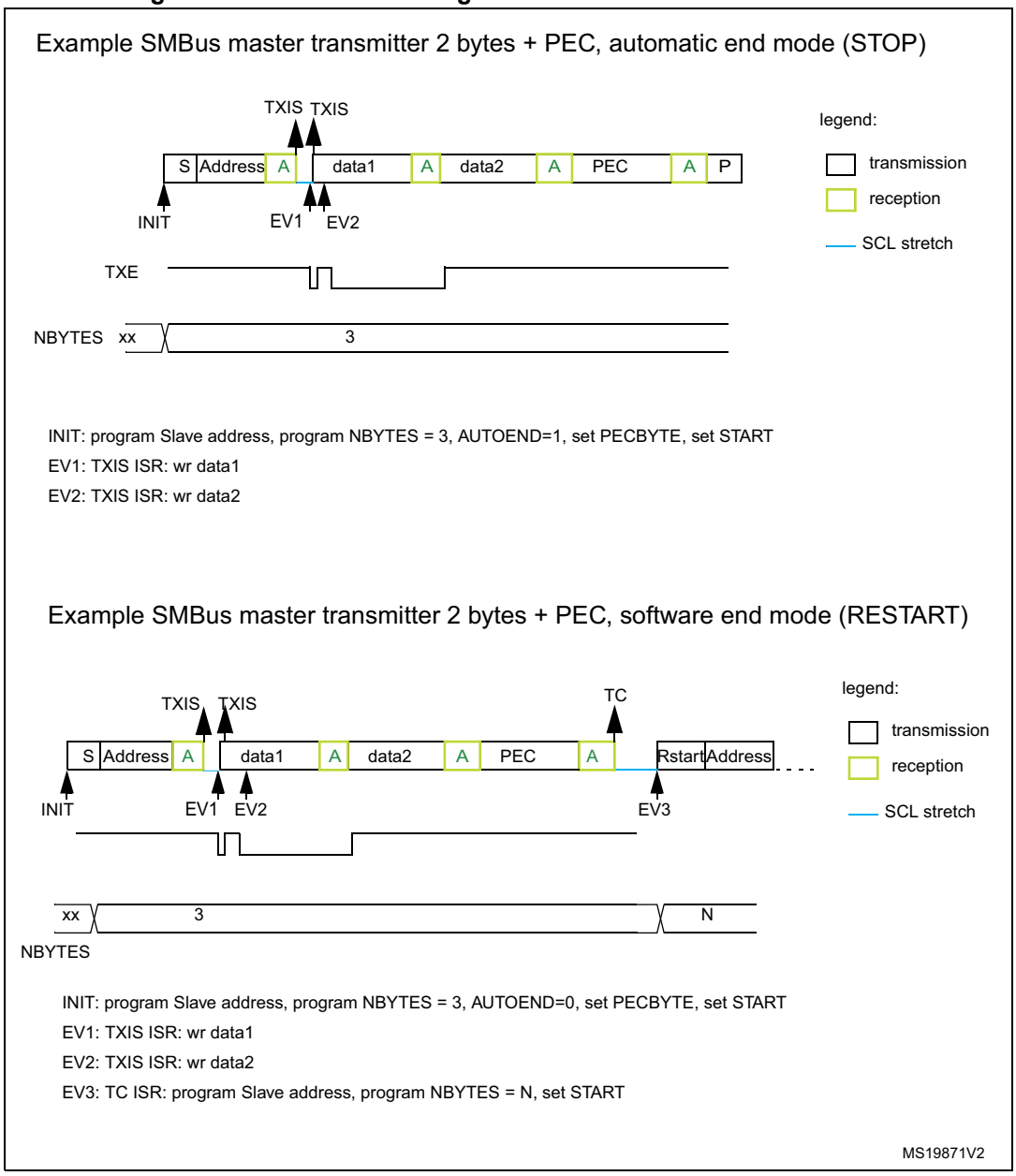

SMBus Master receiver

When the SMBus master wants to receive the PEC followed by a STOP at the end of the transfer, automatic end mode can be selected (AUTOEND=1). The PECBYTE bit must be set and the slave address must be programmed, before setting the START bit. In this case, after NBYTES-1 data have been received, the next received byte is automatically checked versus the I2C_PECR register content. A NACK response is given to the PEC byte, followed by a STOP condition.

When the SMBus master receiver wants to receive the PEC byte followed by a RESTART condition at the end of the transfer, software mode must be selected (AUTOEND=0). The PECBYTE bit must be set and the slave address must be programmed, before setting the START bit. In this case, after NBYTES-1 data have been received, the next received byte is automatically checked versus the I2C_PECR register content. The TC flag is set after the PEC byte reception, stretching the SCL line low. The RESTART condition can be programmed in the TC interrupt subroutine.

Caution: The PECBYTE bit has no effect when the RELOAD bit is set.

Figure 417. Bus transfer diagrams for SMBus master receiver

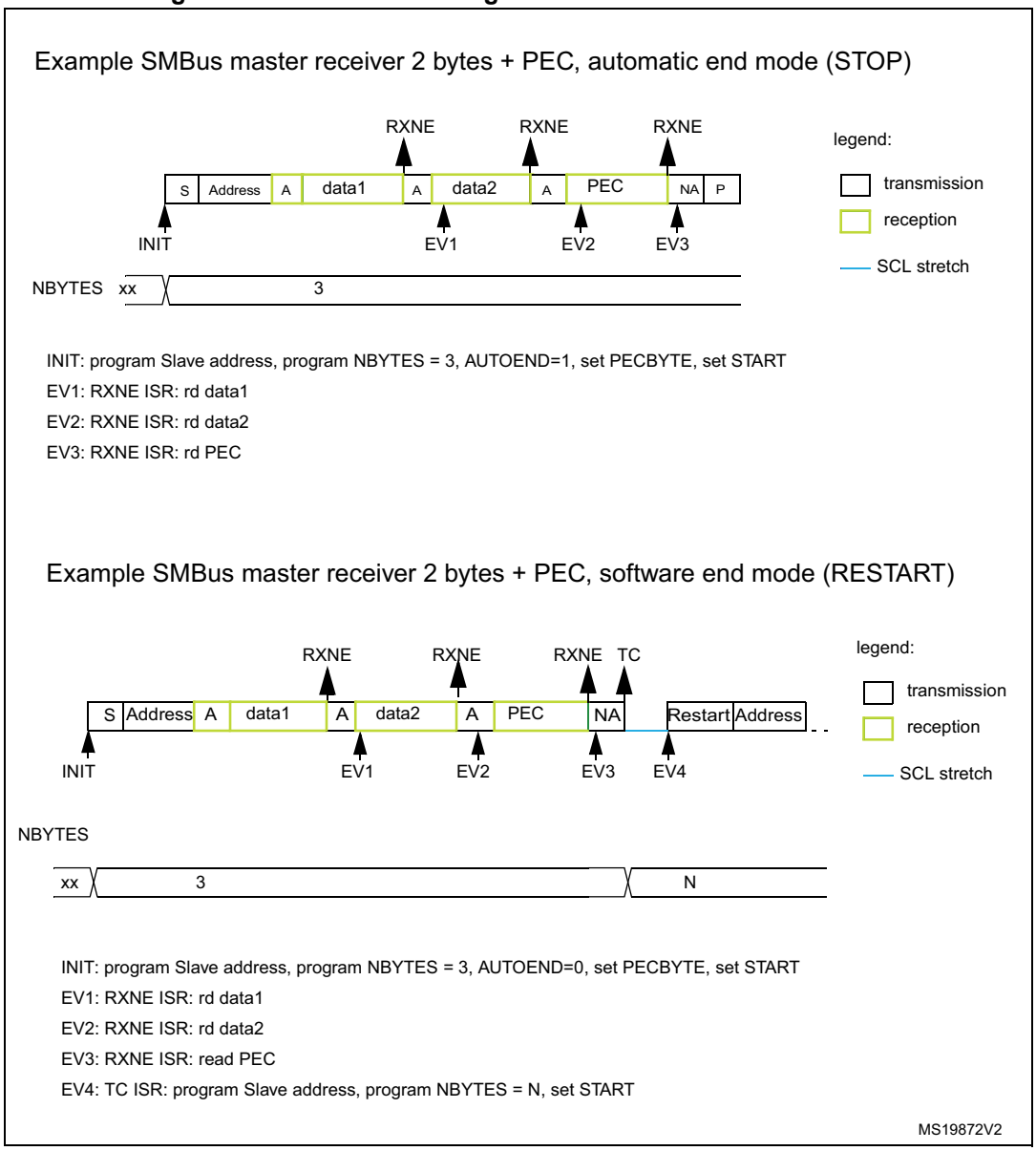

39.4.15 Wakeup from Stop mode on address match

This section is relevant only when Wakeup from Stop mode feature is supported. Refer to *Section 39.3: I2C implementation*.

The I2C is able to wakeup the MCU from Stop mode (APB clock is off), when it is addressed. All addressing modes are supported.

Wakeup from Stop mode is enabled by setting the WUPEN bit in the I2C_CR1 register. The HSI16 oscillator must be selected as the clock source for I2CCLK in order to allow wakeup from Stop mode.

During Stop mode, the HSI16 is switched off. When a START is detected, the I2C interface switches the HSI16 on, and stretches SCL low until HSI16 is woken up.

HSI16 is then used for the address reception.

In case of an address match, the I2C stretches SCL low during MCU wakeup time. The stretch is released when ADDR flag is cleared by software, and the transfer goes on normally.

If the address does not match, the HSI16 is switched off again and the MCU is not woken up.

Note: *If the I2C clock is the system clock, or if WUPEN = 0, the* HSI16 *is not switched on after a START is received.*

Only an ADDR interrupt can wakeup the MCU. Therefore do not enter Stop mode when the I2C is performing a transfer as a master, or as an addressed slave after the ADDR flag is set. This can be managed by clearing SLEEPDEEP bit in the ADDR interrupt routine and setting it again only after the STOPF flag is set.

Caution: The digital filter is not compatible with the wakeup from Stop mode feature. If the DNF bit is not equal to 0, setting the WUPEN bit has no effect.

Caution: This feature is available only when the I2C clock source is the HSI16 oscillator.

Caution: Clock stretching must be enabled (NOSTRETCH=0) to ensure proper operation of the wakeup from Stop mode feature.

Caution: If wakeup from Stop mode is disabled (WUPEN=0), the I2C peripheral must be disabled before entering Stop mode (PE=0).

39.4.16 Error conditions

The following errors are the error conditions which may cause communication to fail.

Bus error (BERR)

A bus error is detected when a START or a STOP condition is detected and is not located after a multiple of 9 SCL clock pulses. A START or a STOP condition is detected when a SDA edge occurs while SCL is high.

The bus error flag is set only if the I2C is involved in the transfer as master or addressed slave (i.e not during the address phase in slave mode).

In case of a misplaced START or RESTART detection in slave mode, the I2C enters address recognition state like for a correct START condition.

When a bus error is detected, the BERR flag is set in the I2C_ISR register, and an interrupt is generated if the ERRIE bit is set in the I2C_CR1 register.

Arbitration lost (ARLO)

An arbitration loss is detected when a high level is sent on the SDA line, but a low level is sampled on the SCL rising edge.

- In master mode, arbitration loss is detected during the address phase, data phase and data acknowledge phase. In this case, the SDA and SCL lines are released, the START control bit is cleared by hardware and the master switches automatically to slave mode.
- In slave mode, arbitration loss is detected during data phase and data acknowledge phase. In this case, the transfer is stopped, and the SCL and SDA lines are released.

When an arbitration loss is detected, the ARLO flag is set in the I2C_ISR register, and an interrupt is generated if the ERRIE bit is set in the I2C_CR1 register.

Overrun/underrun error (OVR)

An overrun or underrun error is detected in slave mode when NOSTRETCH=1 and:

- In reception when a new byte is received and the RXDR register has not been read yet. The new received byte is lost, and a NACK is automatically sent as a response to the new byte.
- In transmission:
  - When STOPF=1 and the first data byte should be sent. The content of the I2C_TXDR register is sent if TXE=0, 0xFF if not.
  - When a new byte must be sent and the I2C_TXDR register has not been written yet, 0xFF is sent.

When an overrun or underrun error is detected, the OVR flag is set in the I2C_ISR register, and an interrupt is generated if the ERRIE bit is set in the I2C_CR1 register.

Packet Error Checking Error (PECERR)

This section is relevant only when the SMBus feature is supported. Refer to *Section 39.3: I2C implementation*.

A PEC error is detected when the received PEC byte does not match with the I2C_PECR register content. A NACK is automatically sent after the wrong PEC reception.

When a PEC error is detected, the PECERR flag is set in the I2C_ISR register, and an interrupt is generated if the ERRIE bit is set in the I2C_CR1 register.

Timeout Error (TIMEOUT)

This section is relevant only when the SMBus feature is supported. Refer to *Section 39.3: I2C implementation*.

A timeout error occurs for any of these conditions:

- TIDLE=0 and SCL remained low for the time defined in the TIMEOUTA[11:0] bits: this is used to detect a SMBus timeout.
- TIDLE=1 and both SDA and SCL remained high for the time defined in the TIMEOUTA [11:0] bits: this is used to detect a bus idle condition.
- Master cumulative clock low extend time reached the time defined in the TIMEOUTB[11:0] bits (SMBus $t_{LOW:MEXT}$ parameter)
- Slave cumulative clock low extend time reached the time defined in TIMEOUTB[11:0] bits (SMBus $t_{LOW:SEXT}$ parameter)

When a timeout violation is detected in master mode, a STOP condition is automatically sent.

When a timeout violation is detected in slave mode, SDA and SCL lines are automatically released.

When a timeout error is detected, the TIMEOUT flag is set in the I2C_ISR register, and an interrupt is generated if the ERRIE bit is set in the I2C_CR1 register.

Alert (ALERT)

This section is relevant only when the SMBus feature is supported. Refer to *Section 39.3: I2C implementation*.

The ALERT flag is set when the I2C interface is configured as a Host (SMBHEN=1), the alert pin detection is enabled (ALERTEN=1) and a falling edge is detected on the SMBA pin. An interrupt is generated if the ERRIE bit is set in the I2C_CR1 register.

39.4.17 DMA requests

Transmission using DMA

DMA (Direct Memory Access) can be enabled for transmission by setting the TXDMAEN bit in the I2C_CR1 register. Data is loaded from an SRAM area configured using the DMA peripheral (see *Section 11: Direct memory access controller (DMA) on page 337*) to the I2C_TXDR register whenever the TXIS bit is set.

Only the data are transferred with DMA.

- In master mode: the initialization, the slave address, direction, number of bytes and START bit are programmed by software (the transmitted slave address cannot be transferred with DMA). When all data are transferred using DMA, the DMA must be initialized before setting the START bit. The end of transfer is managed with the NBYTES counter. Refer to *Master transmitter on page 1295*.
- In slave mode:
  - With NOSTRETCH=0, when all data are transferred using DMA, the DMA must be initialized before the address match event, or in ADDR interrupt subroutine, before clearing ADDR.
  - With NOSTRETCH=1, the DMA must be initialized before the address match event.
- For instances supporting SMBus: the PEC transfer is managed with NBYTES counter. Refer to *SMBus Slave transmitter on page 1310* and *SMBus Master transmitter on page 1314*.

Note: If DMA is used for transmission, the TXIE bit does not need to be enabled.

Reception using DMA

DMA (Direct Memory Access) can be enabled for reception by setting the RXDMAEN bit in the I2C_CR1 register. Data is loaded from the I2C_RXDR register to an SRAM area configured using the DMA peripheral (refer to *Section 11: Direct memory access controller (DMA) on page 337*) whenever the RXNE bit is set. Only the data (including PEC) are transferred with DMA.

- In master mode, the initialization, the slave address, direction, number of bytes and START bit are programmed by software. When all data are transferred using DMA, the

DMA must be initialized before setting the START bit. The end of transfer is managed with the NBYTES counter.

- In slave mode with NOSTRETCH=0, when all data are transferred using DMA, the DMA must be initialized before the address match event, or in the ADDR interrupt subroutine, before clearing the ADDR flag.
- If SMBus is supported (see *Section 39.3: I2C implementation*): the PEC transfer is managed with the NBYTES counter. Refer to *SMBus Slave receiver on page 1312* and *SMBus Master receiver on page 1316*.

Note: If DMA is used for reception, the RXIE bit does not need to be enabled.

39.4.18 Debug mode

When the microcontroller enters debug mode (core halted), the SMBus timeout either continues to work normally or stops, depending on the DBG_I2Cx_SMBUS_TIMEOUT configuration bits in the DBG module.

39.5 I2C low-power modes

Table 243. Effect of low-power modes on the I2C

Mode	Description
Sleep	No effect. I2C interrupts cause the device to exit the Sleep mode.
Stop(1)(2)	The I2C registers content is kept. If WUPEN = 1 and I2C is clocked by an internal oscillator (HSI16): the address recognition is functional. The I2C address match condition causes the device to exit the Stop mode. If WUPEN=0: the I2C must be disabled before entering Stop mode
Standby	The I2C peripheral is powered down and must be reinitialized after exiting Standby mode.

1. Refer to I2C implementation table for information about the Stop modes supported by each instance. If wakeup from a specific Stop mode is not supported, the instance must be disabled before entering this Stop mode.
2. Only I2C3 supports wakeup from Stop 2 mode. The other I2C instances must be disabled before entering Stop 2 mode.

39.6 I2C interrupts

The table below gives the list of I2C interrupt requests.

Table 244. I2C Interrupt requests

Interrupt acronym		Interrupt event	Event flag	Enable control bit	Interrupt clear method	Exit the Sleep mode	Exit the Stop mode	Exit the Standby modes
I2C	I2C_EV	Receive buffer not empty	RXNE	RXIE	Read I2C_RXDR register	Yes	No	No
		Transmit buffer interrupt status	TXIS	TXIE	Write I2C_TXDR register			
		Stop detection interrupt flag	STOPF	STOPIE	Write STOPCF=1			
		Transfer Complete Reload	TCR	TCIE	Write I2C_CR2 with NBYTES[7:0] ≠ 0			
		Transfer complete	TC		Write START=1 or STOP=1			
		Address matched	ADDR	ADDRIE	Write ADDRCF=1		Yes(1)	
		NACK reception	NACKF	NACKIE	Write NACKCF=1		No	
	I2C_ER	Bus error	BERR	ERRIE	Write BERRCF=1	Yes	No	No
		Arbitration loss	ARLO		Write ARLOCF=1			
		Overrun/Under run	OVR		Write OVRCF=1			
		PEC error	PECERR		Write PECERRCF=1			
		Timeout/t_{LOW} error	TIMEOUT		Write TIMEOUTCF=1			
		SMBus Alert	ALERT		Write ALERTCF=1			

1. The ADDR match event can wake up the device from Stop mode only if the I2C instance supports the Wakeup from Stop mode feature. Refer to *Section 39.3: I2C implementation*.

39.7 I2C registers

Refer to *Section 1.2 on page 69* for a list of abbreviations used in register descriptions.

The peripheral registers are accessed by words (32-bit).

39.7.1 I2C control register 1 (I2C_CR1)

Address offset: 0x00

Reset value: 0x0000 0000

Access: No wait states, except if a write access occurs while a write access to this register is ongoing. In this case, wait states are inserted in the second write access until the previous one is completed. The latency of the second write access can be up to 2 x PCLK1 + 6 x I2CCLK.

31	30	29	28	27	26	25	24	23	22	21	20	19	18	17	16
Res.	Res.	Res.	Res.	Res.	Res.	Res.	Res.	PECEN	ALERTEN	SMBDEN	SMBHEN	GCEN	WUPEN	NOSTRETCH	SBC
								rw	rw	rw	rw	rw	rw	rw	rw

15	14	13	12	11	10	9	8	7	6	5	4	3	2	1	0
RXDMAEN	TXDMAEN	Res.	ANFOFF	DNF[3:0]				ERRIE	TCIE	STOPIE	NACKIE	ADDRIE	RXIE	TXIE	PE
rw	rw		rw	rw	rw	rw	rw	rw	rw	rw	rw	rw	rw	rw	rw

Bits 31:24 Reserved, must be kept at reset value.

Bit 23 **PECEN:** PEC enable

0: PEC calculation disabled

1: PEC calculation enabled

Note: If the SMBus feature is not supported, this bit is reserved and forced by hardware to '0'. Refer to Section 39.3: I2C implementation.

Bit 22 **ALERTEN**: SMBus alert enable

0: The SMBus alert pin (SMBA) is not supported in host mode (SMBHEN=1). In device mode (SMBHEN=0), the SMBA pin is released and the Alert Response Address header is disabled (0001100x followed by NACK).

1: The SMBus alert pin is supported in host mode (SMBHEN=1). In device mode (SMBHEN=0), the SMBA pin is driven low and the Alert Response Address header is enabled (0001100x followed by ACK).

Note: When ALERTEN=0, the SMBA pin can be used as a standard GPIO.

If the SMBus feature is not supported, this bit is reserved and forced by hardware to '0'. Refer to Section 39.3: I2C implementation.

Bit 21 **SMBDEN**: SMBus Device Default Address enable

0: Device Default Address disabled. Address 0b1100001x is NACKed.

1: Device Default Address enabled. Address 0b1100001x is ACKed.

Note: If the SMBus feature is not supported, this bit is reserved and forced by hardware to '0'. Refer to Section 39.3: I2C implementation.

Bit 20 **SMBHEN**: SMBus Host Address enable

0: Host Address disabled. Address 0b0001000x is NACKed.

1: Host Address enabled. Address 0b0001000x is ACKed.

Note: If the SMBus feature is not supported, this bit is reserved and forced by hardware to '0'. Refer to Section 39.3: I2C implementation.

Bit 19 **GCEN**: General call enable

0: General call disabled. Address 0b00000000 is NACKed.
1: General call enabled. Address 0b00000000 is ACKed.

Bit 18 **WUPEN**: Wakeup from Stop mode enable

0: Wakeup from Stop mode disable.
1: Wakeup from Stop mode enable.

Note: If the Wakeup from Stop mode feature is not supported, this bit is reserved and forced by hardware to '0'. Refer to Section 39.3: I2C implementation.

Note: WUPEN can be set only when DNF = '0000'

Bit 17 **NOSTRETCH**: Clock stretching disable

This bit is used to disable clock stretching in slave mode. It must be kept cleared in master mode.
0: Clock stretching enabled
1: Clock stretching disabled

Note: This bit can only be programmed when the I2C is disabled (PE = 0).

Bit 16 **SBC**: Slave byte control

This bit is used to enable hardware byte control in slave mode.
0: Slave byte control disabled
1: Slave byte control enabled

Bit 15 **RXDMAEN**: DMA reception requests enable

0: DMA mode disabled for reception
1: DMA mode enabled for reception

Bit 14 **TXDMAEN**: DMA transmission requests enable

0: DMA mode disabled for transmission
1: DMA mode enabled for transmission

Bit 13 Reserved, must be kept at reset value.

Bit 12 **ANFOFF:** Analog noise filter OFF

0: Analog noise filter enabled
1: Analog noise filter disabled

Note: This bit can only be programmed when the I2C is disabled (PE = 0).

Bits 11:8 **DNF[3:0]**: Digital noise filter

These bits are used to configure the digital noise filter on SDA and SCL input. The digital filter, filters spikes with a length of up to DNF[3:0] * t_{I2CCLK}
0000: Digital filter disabled
0001: Digital filter enabled and filtering capability up to 1 t_{I2CCLK}
...
1111: digital filter enabled and filtering capability up to15 t_{I2CCLK}

Note: If the analog filter is also enabled, the digital filter is added to the analog filter. This filter can only be programmed when the I2C is disabled (PE = 0).

Bit 7 **ERRIE**: Error interrupts enable

0: Error detection interrupts disabled
1: Error detection interrupts enabled

Note: Any of these errors generate an interrupt:
Arbitration Loss (ARLO)
Bus Error detection (BERR)
Overrun/Underrun (OVR)
Timeout detection (TIMEOUT)
PEC error detection (PECERR)
Alert pin event detection (ALERT)

Bit 6 **TCIE**: Transfer Complete interrupt enable

0: Transfer Complete interrupt disabled
1: Transfer Complete interrupt enabled

Note: Any of these events generate an interrupt:
Transfer Complete (TC)
Transfer Complete Reload (TCR)

Bit 5 **STOPIE**: Stop detection Interrupt enable

0: Stop detection (STOPF) interrupt disabled
1: Stop detection (STOPF) interrupt enabled

Bit 4 **NACKIE**: Not acknowledge received Interrupt enable

0: Not acknowledge (NACKF) received interrupts disabled
1: Not acknowledge (NACKF) received interrupts enabled

Bit 3 **ADDRIE**: Address match Interrupt enable (slave only)

0: Address match (ADDR) interrupts disabled
1: Address match (ADDR) interrupts enabled

Bit 2 **RXIE**: RX Interrupt enable

0: Receive (RXNE) interrupt disabled
1: Receive (RXNE) interrupt enabled

Bit 1 **TXIE**: TX Interrupt enable

0: Transmit (TXIS) interrupt disabled
1: Transmit (TXIS) interrupt enabled

Bit 0 **PE**: Peripheral enable

0: Peripheral disable
1: Peripheral enable

Note: When PE=0, the I2C SCL and SDA lines are released. Internal state machines and status bits are put back to their reset value. When cleared, PE must be kept low for at least 3 APB clock cycles.

39.7.2 I2C control register 2 (I2C_CR2)

Address offset: 0x04

Reset value: 0x0000 0000

Access: No wait states, except if a write access occurs while a write access to this register is ongoing. In this case, wait states are inserted in the second write access until the previous one is completed. The latency of the second write access can be up to 2 x PCLK1 + 6 x I2CCLK.

31	30	29	28	27	26	25	24	23	22	21	20	19	18	17	16
Res.	Res.	Res.	Res.	Res.	PEC BYTE	AUTOEND	RELOAD	NBYTES[7:0]							
					rs	rw	rw	rw	rw	rw	rw	rw	rw	rw	rw

15	14	13	12	11	10	9	8	7	6	5	4	3	2	1	0
NACK	STOP	START	HEAD10R	ADD10	RD_WRN	SADD[9:0]									
rs	rs	rs	rw	rw	rw	rw	rw	rw	rw	rw	rw	rw	rw	rw	rw

Bits 31:27 Reserved, must be kept at reset value.

Bit 26 **PECBYTE**: Packet error checking byte

This bit is set by software, and cleared by hardware when the PEC is transferred, or when a STOP condition or an Address matched is received, also when PE=0.

0: No PEC transfer.

1: PEC transmission/reception is requested

Note: Writing '0' to this bit has no effect.

This bit has no effect when RELOAD is set.

This bit has no effect is slave mode when SBC=0.

If the SMBus feature is not supported, this bit is reserved and forced by hardware to '0'. Refer to Section 39.3: I2C implementation.

Bit 25 **AUTOEND**: Automatic end mode (master mode)

This bit is set and cleared by software.

0: software end mode: TC flag is set when NBYTES data are transferred, stretching SCL low.

1: Automatic end mode: a STOP condition is automatically sent when NBYTES data are transferred.

Note: This bit has no effect in slave mode or when the RELOAD bit is set.

Bit 24 **RELOAD**: NBYTES reload mode

This bit is set and cleared by software.

0: The transfer is completed after the NBYTES data transfer (STOP or RESTART follows).

1: The transfer is not completed after the NBYTES data transfer (NBYTES is reloaded). TCR flag is set when NBYTES data are transferred, stretching SCL low.

Bits 23:16 **NBYTES[7:0]**: Number of bytes

The number of bytes to be transmitted/received is programmed there. This field is don't care in slave mode with SBC=0.

Note: Changing these bits when the START bit is set is not allowed.

Bit 15 **NACK**: NACK generation (slave mode)

The bit is set by software, cleared by hardware when the NACK is sent, or when a STOP condition or an Address matched is received, or when PE=0.

0: an ACK is sent after current received byte.

1: a NACK is sent after current received byte.

Note: Writing '0' to this bit has no effect.

This bit is used in slave mode only: in master receiver mode, NACK is automatically generated after last byte preceding STOP or RESTART condition, whatever the NACK bit value.

When an overrun occurs in slave receiver NOSTRETCH mode, a NACK is automatically generated whatever the NACK bit value.

When hardware PEC checking is enabled (PECBYTE=1), the PEC acknowledge value does not depend on the NACK value.

Bit 14 **STOP**: Stop generation (master mode)

The bit is set by software, cleared by hardware when a STOP condition is detected, or when PE = 0.

In Master Mode:

0: No Stop generation.

1: Stop generation after current byte transfer.

Note: Writing '0' to this bit has no effect.

Bit 13 **START**: Start generation

This bit is set by software, and cleared by hardware after the Start followed by the address sequence is sent, by an arbitration loss, by a timeout error detection, or when PE = 0. It can also be cleared by software by writing '1' to the ADDRCF bit in the I2C_ICR register.

0: No Start generation.

1: Restart/Start generation:

If the I2C is already in master mode with AUTOEND = 0, setting this bit generates a Repeated Start condition when RELOAD=0, after the end of the NBYTES transfer.

Otherwise setting this bit generates a START condition once the bus is free.

Note: Writing '0' to this bit has no effect.

The START bit can be set even if the bus is BUSY or I2C is in slave mode.

This bit has no effect when RELOAD is set.

Bit 12 **HEAD10R**: 10-bit address header only read direction (master receiver mode)

0: The master sends the complete 10 bit slave address read sequence: Start + 2 bytes 10bit address in write direction + Restart + 1st 7 bits of the 10 bit address in read direction.

1: The master only sends the 1st 7 bits of the 10 bit address, followed by Read direction.

Note: Changing this bit when the START bit is set is not allowed.

Bit 11 **ADD10**: 10-bit addressing mode (master mode)

0: The master operates in 7-bit addressing mode,

1: The master operates in 10-bit addressing mode

Note: Changing this bit when the START bit is set is not allowed.

Bit 10 **RD_WRN**: Transfer direction (master mode)

0: Master requests a write transfer.

1: Master requests a read transfer.

Note: Changing this bit when the START bit is set is not allowed.

Bits 9:0 **SADD[9:0]**: Slave address (master mode)

In 7-bit addressing mode (ADD10 = 0):

SADD[7:1] should be written with the 7-bit slave address to be sent. The bits SADD[9], SADD[8] and SADD[0] are don't care.

In 10-bit addressing mode (ADD10 = 1):

SADD[9:0] should be written with the 10-bit slave address to be sent.

Note: Changing these bits when the START bit is set is not allowed.

39.7.3 I2C own address 1 register (I2C_OAR1)

Address offset: 0x08

Reset value: 0x0000 0000

Access: No wait states, except if a write access occurs while a write access to this register is ongoing. In this case, wait states are inserted in the second write access until the previous one is completed. The latency of the second write access can be up to 2 x PCLK1 + 6 x I2CCLK.

31	30	29	28	27	26	25	24	23	22	21	20	19	18	17	16
Res.	Res.	Res.	Res.	Res.	Res.	Res.	Res.	Res.	Res.	Res.	Res.	Res.	Res.	Res.	Res.

15	14	13	12	11	10	9	8	7	6	5	4	3	2	1	0
OA1EN	Res.	Res.	Res.	Res.	OA1 MODE	OA1[9:0]									
rw					rw	rw	rw	rw	rw	rw	rw	rw	rw	rw	rw

Bits 31:16 Reserved, must be kept at reset value.

Bit 15 **OA1EN**: Own Address 1 enable

0: Own address 1 disabled. The received slave address OA1 is NACKed.
1: Own address 1 enabled. The received slave address OA1 is ACKed.

Bits 14:11 Reserved, must be kept at reset value.

Bit 10 **OA1MODE**: Own Address 1 10-bit mode

0: Own address 1 is a 7-bit address.
1: Own address 1 is a 10-bit address.

Note: This bit can be written only when OA1EN=0.

Bits 9:0 **OA1[9:0]**: Interface own slave address

7-bit addressing mode: OA1[7:1] contains the 7-bit own slave address. The bits OA1[9], OA1[8] and OA1[0] are don't care.

10-bit addressing mode: OA1[9:0] contains the 10-bit own slave address.

Note: These bits can be written only when OA1EN=0.

39.7.4 I2C own address 2 register (I2C_OAR2)

Address offset: 0x0C

Reset value: 0x0000 0000

Access: No wait states, except if a write access occurs while a write access to this register is ongoing. In this case, wait states are inserted in the second write access until the previous one is completed. The latency of the second write access can be up to 2 x PCLK1 + 6 x I2CCLK.

31	30	29	28	27	26	25	24	23	22	21	20	19	18	17	16
Res.	Res.	Res.	Res.	Res.	Res.	Res.	Res.	Res.	Res.	Res.	Res.	Res.	Res.	Res.	Res.

15	14	13	12	11	10	9	8	7	6	5	4	3	2	1	0
OA2EN	Res.	Res.	Res.	Res.	OA2MSK[2:0]			OA2[7:1]							Res.
rw					rw	rw	rw	rw	rw	rw	rw	rw	rw	rw	

Bits 31:16 Reserved, must be kept at reset value.

Bit 15 **OA2EN**: Own Address 2 enable

0: Own address 2 disabled. The received slave address OA2 is NACKed.

1: Own address 2 enabled. The received slave address OA2 is ACKed.

Bits 14:11 Reserved, must be kept at reset value.

Bits 10:8 **OA2MSK[2:0]**: Own Address 2 masks

000: No mask

001: OA2[1] is masked and don't care. Only OA2[7:2] are compared.

010: OA2[2:1] are masked and don't care. Only OA2[7:3] are compared.

011: OA2[3:1] are masked and don't care. Only OA2[7:4] are compared.

100: OA2[4:1] are masked and don't care. Only OA2[7:5] are compared.

101: OA2[5:1] are masked and don't care. Only OA2[7:6] are compared.

110: OA2[6:1] are masked and don't care. Only OA2[7] is compared.

111: OA2[7:1] are masked and don't care. No comparison is done, and all (except reserved) 7-bit received addresses are acknowledged.

Note: These bits can be written only when OA2EN=0.

As soon as OA2MSK is not equal to 0, the reserved I2C addresses (0b0000xxx and 0b1111xxx) are not acknowledged even if the comparison matches.

Bits 7:1 **OA2[7:1]**: Interface address

7-bit addressing mode: 7-bit address

Note: These bits can be written only when OA2EN=0.

Bit 0 Reserved, must be kept at reset value.

39.7.5 I2C timing register (I2C_TIMINGR)

Address offset: 0x10

Reset value: 0x0000 0000

Access: No wait states

31	30	29	28	27	26	25	24	23	22	21	20	19	18	17	16
PRESC[3:0]				Res.	Res.	Res.	Res.	SCLDEL[3:0]				SDADEL[3:0]			
rw	rw	rw	rw					rw	rw	rw	rw	rw	rw	rw	rw

15	14	13	12	11	10	9	8	7	6	5	4	3	2	1	0
SCLH[7:0]								SCLL[7:0]							
rw	rw	rw	rw	rw	rw	rw	rw	rw	rw	rw	rw	rw	rw	rw	rw

Bits 31:28 **PRESC[3:0]**: Timing prescaler

This field is used to prescale I2CCLK in order to generate the clock period t_{PRESC} used for data setup and hold counters (refer to *I2C timings on page 1276*) and for SCL high and low level counters (refer to *I2C master initialization on page 1291*).

t_{PRESC} = (PRESC+1) x t_{I2CCLK}

Bits 27:24 Reserved, must be kept at reset value.

Bits 23:20 **SCLDEL[3:0]**: Data setup time

This field is used to generate a delay t_{SCLDEL} between SDA edge and SCL rising edge. In master mode and in slave mode with NOSTRETCH = 0, the SCL line is stretched low during t_{SCLDEL}.

t_{SCLDEL} = (SCLDEL+1) x t_{PRESC}

Note: t_{SCLDEL} is used to generate $t_{SU:DAT}$ timing.

Bits 19:16 **SDADEL[3:0]**: Data hold time

This field is used to generate the delay t_{SDADEL} between SCL falling edge and SDA edge. In master mode and in slave mode with NOSTRETCH = 0, the SCL line is stretched low during t_{SDADEL}.

t_{SDADEL}= SDADEL x t_{PRESC}

Note: SDADEL is used to generate $t_{HD:DAT}$ timing.

Bits 15:8 **SCLH[7:0]**: SCL high period (master mode)

This field is used to generate the SCL high period in master mode.

t_{SCLH} = (SCLH+1) x t_{PRESC}

Note: SCLH is also used to generate $t_{SU:STO}$ and $t_{HD:STA}$ timing.

Bits 7:0 **SCLL[7:0]**: SCL low period (master mode)

This field is used to generate the SCL low period in master mode.

t_{SCLL} = (SCLL+1) x t_{PRESC}

Note: SCLL is also used to generate t_{BUF} and $t_{SU:STA}$ timings.

Note: This register must be configured when the I2C is disabled (PE = 0).

Note: The STM32CubeMX tool calculates and provides the I2C_TIMINGR content in the I2C Configuration window.

39.7.6 I2C timeout register (I2C_TIMEOUTR)

Address offset: 0x14

Reset value: 0x0000 0000

Access: No wait states, except if a write access occurs while a write access to this register is ongoing. In this case, wait states are inserted in the second write access until the previous one is completed. The latency of the second write access can be up to 2 x PCLK1 + 6 x I2CCLK.

31	30	29	28	27	26	25	24	23	22	21	20	19	18	17	16
TEXTEN	Res.	Res.	Res.	TIMEOUTB[11:0]											
rw				rw	rw	rw	rw	rw	rw	rw	rw	rw	rw	rw	rw
15	14	13	12	11	10	9	8	7	6	5	4	3	2	1	0
TIMOUTEN	Res.	Res.	TIDLE	TIMEOUTA[11:0]											
rw			rw	rw	rw	rw	rw	rw	rw	rw	rw	rw	rw	rw	rw

Bit 31 **TEXTEN**: Extended clock timeout enable

0: Extended clock timeout detection is disabled

1: Extended clock timeout detection is enabled. When a cumulative SCL stretch for more than $t_{LOW:EXT}$ is done by the I2C interface, a timeout error is detected (TIMEOUT=1).

Bits 30:28 Reserved, must be kept at reset value.

Bits 27:16 **TIMEOUTB[11:0]**: Bus timeout B

This field is used to configure the cumulative clock extension timeout:

In master mode, the master cumulative clock low extend time ($t_{LOW:MEXT}$) is detected

In slave mode, the slave cumulative clock low extend time ($t_{LOW:SEXT}$) is detected

$t_{LOW:EXT}$= (TIMEOUTB+1) x 2048 x t_{I2CCLK}

Note: These bits can be written only when TEXTEN=0.

Bit 15 **TIMOUTEN**: Clock timeout enable

0: SCL timeout detection is disabled

1: SCL timeout detection is enabled: when SCL is low for more than $t_{TIMEOUT}$ (TIDLE=0) or high for more than t_{IDLE} (TIDLE=1), a timeout error is detected (TIMEOUT=1).

Bits 14:13 Reserved, must be kept at reset value.

Bit 12 **TIDLE**: Idle clock timeout detection

0: TIMEOUTA is used to detect SCL low timeout

1: TIMEOUTA is used to detect both SCL and SDA high timeout (bus idle condition)

Note: This bit can be written only when TIMOUTEN=0.

Bits 11:0 **TIMEOUTA[11:0]**: Bus Timeout A

This field is used to configure:

The SCL low timeout condition $t_{TIMEOUT}$ when TIDLE=0

$t_{TIMEOUT}$= (TIMEOUTA+1) x 2048 x t_{I2CCLK}

The bus idle condition (both SCL and SDA high) when TIDLE=1

t_{IDLE}= (TIMEOUTA+1) x 4 x t_{I2CCLK}

Note: These bits can be written only when TIMOUTEN=0.

Note: If the SMBus feature is not supported, this register is reserved and forced by hardware to "0x00000000". Refer to Section 39.3: I2C implementation.

39.7.7 I2C interrupt and status register (I2C_ISR)

Address offset: 0x18

Reset value: 0x0000 0001

Access: No wait states

31	30	29	28	27	26	25	24	23	22	21	20	19	18	17	16
Res.	Res.	Res.	Res.	Res.	Res.	Res.	Res.	ADDCODE[6:0]							DIR
								r	r	r	r	r	r	r	r

15	14	13	12	11	10	9	8	7	6	5	4	3	2	1	0
BUSY	Res.	ALERT	TIME OUT	PEC ERR	OVR	ARLO	BERR	TCR	TC	STOPF	NACKF	ADDR	RXNE	TXIS	TXE
r		r	r	r	r	r	r	r	r	r	r	r	r	rs	rs

Bits 31:24 Reserved, must be kept at reset value.

Bits 23:17 **ADDCODE[6:0]**: Address match code (Slave mode)

These bits are updated with the received address when an address match event occurs (ADDR = 1).

In the case of a 10-bit address, ADDCODE provides the 10-bit header followed by the 2 MSBs of the address.

Bit 16 **DIR**: Transfer direction (Slave mode)

This flag is updated when an address match event occurs (ADDR=1).

0: Write transfer, slave enters receiver mode.

1: Read transfer, slave enters transmitter mode.

Bit 15 **BUSY**: Bus busy

This flag indicates that a communication is in progress on the bus. It is set by hardware when a START condition is detected. It is cleared by hardware when a STOP condition is detected, or when PE=0.

Bit 14 Reserved, must be kept at reset value.

Bit 13 **ALERT**: SMBus alert

This flag is set by hardware when SMBHEN=1 (SMBus host configuration), ALERTEN=1 and a SMBALERT event (falling edge) is detected on SMBA pin. It is cleared by software by setting the ALERTCF bit.

Note: This bit is cleared by hardware when PE=0.

If the SMBus feature is not supported, this bit is reserved and forced by hardware to '0'. Refer to Section 39.3: I2C implementation.

Bit 12 **TIMEOUT**: Timeout or t_{LOW} detection flag

This flag is set by hardware when a timeout or extended clock timeout occurred. It is cleared by software by setting the TIMEOUTCF bit.

Note: This bit is cleared by hardware when PE=0.

If the SMBus feature is not supported, this bit is reserved and forced by hardware to '0'. Refer to Section 39.3: I2C implementation.

Bit 11 **PECERR**: PEC Error in reception

This flag is set by hardware when the received PEC does not match with the PEC register content. A NACK is automatically sent after the wrong PEC reception. It is cleared by software by setting the PECCF bit.

Note: This bit is cleared by hardware when PE=0.

If the SMBus feature is not supported, this bit is reserved and forced by hardware to '0'. Refer to Section 39.3: I2C implementation.

Bit 10 **OVR**: Overrun/Underrun (slave mode)

This flag is set by hardware in slave mode with NOSTRETCH=1, when an overrun/underrun error occurs. It is cleared by software by setting the OVRCF bit.

Note: This bit is cleared by hardware when PE=0.

Bit 9 **ARLO**: Arbitration lost

This flag is set by hardware in case of arbitration loss. It is cleared by software by setting the ARLOCF bit.

Note: This bit is cleared by hardware when PE=0.

Bit 8 **BERR**: Bus error

This flag is set by hardware when a misplaced Start or STOP condition is detected whereas the peripheral is involved in the transfer. The flag is not set during the address phase in slave mode. It is cleared by software by setting *BERRCF bit.*

Note: This bit is cleared by hardware when PE=0.

Bit 7 **TCR**: Transfer Complete Reload

This flag is set by hardware when RELOAD=1 and NBYTES data have been transferred. It is cleared by software when NBYTES is written to a non-zero value.

Note: This bit is cleared by hardware when PE=0.

This flag is only for master mode, or for slave mode when the SBC bit is set.

Bit 6 **TC**: Transfer Complete (master mode)

This flag is set by hardware when RELOAD=0, AUTOEND=0 and NBYTES data have been transferred. It is cleared by software when START bit or STOP bit is set.

Note: This bit is cleared by hardware when PE=0.

Bit 5 **STOPF**: Stop detection flag

This flag is set by hardware when a STOP condition is detected on the bus and the peripheral is involved in this transfer:

- either as a master, provided that the STOP condition is generated by the peripheral.
- or as a slave, provided that the peripheral has been addressed previously during this transfer.

It is cleared by software by setting the STOPCF bit.

Note: This bit is cleared by hardware when PE=0.

Bit 4 **NACKF**: Not Acknowledge received flag

This flag is set by hardware when a NACK is received after a byte transmission. It is cleared by software by setting the NACKCF bit.

Note: This bit is cleared by hardware when PE=0.

Bit 3 **ADDR**: Address matched (slave mode)

This bit is set by hardware as soon as the received slave address matched with one of the enabled slave addresses. It is cleared by software by setting *ADDRCF bit.*

Note: This bit is cleared by hardware when PE=0.

Bit 2 **RXNE**: Receive data register not empty (receivers)

This bit is set by hardware when the received data is copied into the I2C_RXDR register, and is ready to be read. It is cleared when I2C_RXDR is read.

Note: This bit is cleared by hardware when PE=0.

Bit 1 **TXIS**: Transmit interrupt status (transmitters)

This bit is set by hardware when the I2C_TXDR register is empty and the data to be transmitted must be written in the I2C_TXDR register. It is cleared when the next data to be sent is written in the I2C_TXDR register.

This bit can be written to '1' by software when NOSTRETCH=1 only, in order to generate a TXIS event (interrupt if TXIE=1 or DMA request if TXDMAEN=1).

Note: This bit is cleared by hardware when PE=0.

Bit 0 **TXE**: Transmit data register empty (transmitters)

This bit is set by hardware when the I2C_TXDR register is empty. It is cleared when the next data to be sent is written in the I2C_TXDR register.

This bit can be written to '1' by software in order to flush the transmit data register I2C_TXDR.

Note: This bit is set by hardware when PE=0.

39.7.8 I2C interrupt clear register (I2C_ICR)

Address offset: 0x1C

Reset value: 0x0000 0000

Access: No wait states

31	30	29	28	27	26	25	24	23	22	21	20	19	18	17	16
Res.	Res.	Res.	Res.	Res.	Res.	Res.	Res.	Res.	Res.	Res.	Res.	Res.	Res.	Res.	Res.

15	14	13	12	11	10	9	8	7	6	5	4	3	2	1	0
Res.	Res.	ALERTCF	TIMOUTCF	PECCF	OVRCF	ARLOCF	BERRCF	Res.	Res.	STOPCF	NACKCF	ADDRCF	Res.	Res.	Res.
		w	w	w	w	w	w			w	w	w			

Bits 31:14 Reserved, must be kept at reset value.

Bit 13 **ALERTCF**: Alert flag clear

Writing 1 to this bit clears the ALERT flag in the I2C_ISR register.

Note: If the SMBus feature is not supported, this bit is reserved and forced by hardware to '0'. Refer to Section 39.3: I2C implementation.

Bit 12 **TIMOUTCF**: Timeout detection flag clear

Writing 1 to this bit clears the TIMEOUT flag in the I2C_ISR register.

Note: If the SMBus feature is not supported, this bit is reserved and forced by hardware to '0'. Refer to Section 39.3: I2C implementation.

Bit 11 **PECCF**: PEC Error flag clear

Writing 1 to this bit clears the PECERR flag in the I2C_ISR register.

Note: If the SMBus feature is not supported, this bit is reserved and forced by hardware to '0'. Refer to Section 39.3: I2C implementation.

Bit 10 **OVRCF**: Overrun/Underrun flag clear
Writing 1 to this bit clears the OVR flag in the I2C_ISR register.

Bit 9 **ARLOCF**: Arbitration lost flag clear
Writing 1 to this bit clears the ARLO flag in the I2C_ISR register.

Bit 8 **BERRCF**: Bus error flag clear
Writing 1 to this bit clears the BERRF flag in the I2C_ISR register.

Bits 7:6 Reserved, must be kept at reset value.

Bit 5 **STOPCF**: STOP detection flag clear
Writing 1 to this bit clears the STOPF flag in the I2C_ISR register.

Bit 4 **NACKCF**: Not Acknowledge flag clear
Writing 1 to this bit clears the NACKF flag in I2C_ISR register.

Bit 3 **ADDRCF**: Address matched flag clear
Writing 1 to this bit clears the ADDR flag in the I2C_ISR register. Writing 1 to this bit also clears the START bit in the I2C_CR2 register.

Bits 2:0 Reserved, must be kept at reset value.

39.7.9 I2C PEC register (I2C_PECR)

Address offset: 0x20

Reset value: 0x0000 0000

Access: No wait states

31	30	29	28	27	26	25	24	23	22	21	20	19	18	17	16
Res.	Res.	Res.	Res.	Res.	Res.	Res.	Res.	Res.	Res.	Res.	Res.	Res.	Res.	Res.	Res.

15	14	13	12	11	10	9	8	7	6	5	4	3	2	1	0
Res.	Res.	Res.	Res.	Res.	Res.	Res.	Res.	PEC[7:0]							
								r	r	r	r	r	r	r	r

Bits 31:8 Reserved, must be kept at reset value.

Bits 7:0 **PEC[7:0]** Packet error checking register
This field contains the internal PEC when PECEN=1.
The PEC is cleared by hardware when PE=0.

Note: If the SMBus feature is not supported, this register is reserved and forced by hardware to "0x00000000". Refer to Section 39.3: I2C implementation.

39.7.10 I2C receive data register (I2C_RXDR)

Address offset: 0x24

Reset value: 0x0000 0000

Access: No wait states

31	30	29	28	27	26	25	24	23	22	21	20	19	18	17	16
Res.	Res.	Res.	Res.	Res.	Res.	Res.	Res.	Res.	Res.	Res.	Res.	Res.	Res.	Res.	Res.

15	14	13	12	11	10	9	8	7	6	5	4	3	2	1	0
Res.	Res.	Res.	Res.	Res.	Res.	Res.	Res.	RXDATA[7:0]							
								r	r	r	r	r	r	r	r

Bits 31:8 Reserved, must be kept at reset value.

Bits 7:0 **RXDATA[7:0]** 8-bit receive data
Data byte received from the I^2C bus

39.7.11 I2C transmit data register (I2C_TXDR)

Address offset: 0x28

Reset value: 0x0000 0000

Access: No wait states

31	30	29	28	27	26	25	24	23	22	21	20	19	18	17	16
Res.	Res.	Res.	Res.	Res.	Res.	Res.	Res.	Res.	Res.	Res.	Res.	Res.	Res.	Res.	Res.

15	14	13	12	11	10	9	8	7	6	5	4	3	2	1	0
Res.	Res.	Res.	Res.	Res.	Res.	Res.	Res.	TXDATA[7:0]							
								rw	rw	rw	rw	rw	rw	rw	rw

Bits 31:8 Reserved, must be kept at reset value.

Bits 7:0 **TXDATA[7:0]** 8-bit transmit data
Data byte to be transmitted to the I^2C bus

Note: These bits can be written only when TXE=1.

39.7.12 I2C register map

The table below provides the I2C register map and reset values.

Table 245. I2C register map and reset values

Offset	Register name	31	30	29	28	27	26	25	24	23	22	21	20	19	18	17	16	15	14	13	12	11	10	9	8	7	6	5	4	3	2	1	0
0x0	I2C_CR1	Res.	Res.	Res.	Res.	Res.	Res.	Res.	Res.	PECEN	ALERTEN	SMBDEN	SMBHEN	GCEN	WUPEN	NOSTRETCH	SBC	RXDMAEN	TXDMAEN	Res.	ANFOFF	DNF[3:0]				ERRIE	TCIE	STOPIE	NACKIE	ADDRIE	RXIE	TXIE	PE
	Reset value									0	0	0	0	0	0	0	0	0	0		0	0	0	0	0	0	0	0	0	0	0	0	0
0x4	I2C_CR2	Res.	Res.	Res.	Res.	Res.	PECBYTE	AUTOEND	RELOAD	NBYTES[7:0]								NACK	STOP	START	HEAD10R	ADD10	RD_WRN	SADD[9:0]									
	Reset value						0	0	0	0	0	0	0	0	0	0	0	0	0	0	0	0	0	0	0	0	0	0	0	0	0	0	0
0x8	I2C_OAR1	Res.	Res.	Res.	Res.	Res.	Res.	Res.	Res.	Res.	Res.	Res.	Res.	Res.	Res.	Res.	Res.	OA1EN	Res.	Res.	Res.	Res.	OA1MODE	OA1[9:0]									
	Reset value																	0					0	0	0	0	0	0	0	0	0	0	0
0xC	I2C_OAR2	Res.	Res.	Res.	Res.	Res.	Res.	Res.	Res.	Res.	Res.	Res.	Res.	Res.	Res.	Res.	Res.	OA2EN	Res.	Res.	Res.	Res.	OA2MSK [2:0]			OA2[7:1]							Res.
	Reset value																	0					0	0	0	0	0	0	0	0	0	0	
0x10	I2C_TIMINGR	PRESC[3:0]				Res.	Res.	Res.	Res.	SCLDEL [3:0]				SDADEL [3:0]				SCLH[7:0]								SCLL[7:0]							
	Reset value	0	0	0	0					0	0	0	0	0	0	0	0	0	0	0	0	0	0	0	0	0	0	0	0	0	0	0	0
0x14	I2C_TIMEOUTR	TEXTEN	Res.	Res.	Res.	TIMEOUTB[11:0]												TIMOUTEN	Res.	Res.	TIDLE	TIMEOUTA[11:0]											
	Reset value	0				0	0	0	0	0	0	0	0	0	0	0	0	0			0	0	0	0	0	0	0	0	0	0	0	0	0
0x18	I2C_ISR	Res.	Res.	Res.	Res.	Res.	Res.	Res.	Res.	ADDCODE[6:0]							DIR	BUSY	Res.	ALERT	TIMEOUT	PECERR	OVR	ARLO	BERR	TCR	TC	STOPF	NACKF	ADDR	RXNE	TXIS	TXE
	Reset value									0	0	0	0	0	0	0	0	0		0	0	0	0	0	0	0	0	0	0	0	0	0	1
0x1C	I2C_ICR	Res.	Res.	Res.	Res.	Res.	Res.	Res.	Res.	Res.	Res.	Res.	Res.	Res.	Res.	Res.	Res.	Res.	Res.	ALERTCF	TIMOUTCF	PECCF	OVRCF	ARLOCF	BERRCF	Res.	Res.	STOPCF	NACKCF	ADDRCF	Res.	Res.	Res.
	Reset value																			0	0	0	0	0	0			0	0	0			
0x20	I2C_PECR	Res.	Res.	Res.	Res.	Res.	Res.	Res.	Res.	Res.	Res.	Res.	Res.	Res.	Res.	Res.	Res.	Res.	Res.	Res.	Res.	Res.	Res.	Res.	Res.	PEC[7:0]							
	Reset value																									0	0	0	0	0	0	0	0
0x24	I2C_RXDR	Res.	Res.	Res.	Res.	Res.	Res.	Res.	Res.	Res.	Res.	Res.	Res.	Res.	Res.	Res.	Res.	Res.	Res.	Res.	Res.	Res.	Res.	Res.	Res.	RXDATA[7:0]							
	Reset value																									0	0	0	0	0	0	0	0

Table 245. I2C register map and reset values (continued)

Offset	Register name	31	30	29	28	27	26	25	24	23	22	21	20	19	18	17	16	15	14	13	12	11	10	9	8	7	6	5	4	3	2	1	0
0x28	I2C_TXDR	Res.	Res.	Res.	Res.	Res.	Res.	Res.	Res.	Res.	Res.	Res.	Res.	Res.	Res.	Res.	Res.	Res.	Res.	Res.	Res.	Res.	Res.	Res.	Res.	TXDATA[7:0]							
	Reset value																									0	0	0	0	0	0	0	0

Refer to *Section 2.2 on page 75* for the register boundary addresses.

40 Universal synchronous/asynchronous receiver transmitter (USART/UART)

40.1 Introduction

The universal synchronous asynchronous receiver transmitter (USART) offers a flexible means of Full-duplex data exchange with external equipment requiring an industry standard NRZ asynchronous serial data format. The USART offers a very wide range of baud rates using a programmable baud rate generator.

It supports synchronous one-way communication and Half-duplex Single-wire communication, as well as multiprocessor communications. It also supports the LIN (Local Interconnect Network), Smartcard protocol and IrDA (Infrared Data Association) SIR ENDEC specifications and Modem operations (CTS/RTS).

High speed data communication is possible by using the DMA (direct memory access) for multibuffer configuration.

40.2 USART main features

- Full-duplex asynchronous communications
- NRZ standard format (mark/space)
- Configurable oversampling method by 16 or 8 to give flexibility between speed and clock tolerance
- A common programmable transmit and receive baud rate of up to 10 Mbit/s when the clock frequency is 80 MHz and oversampling is by 8
- Dual clock domain allowing:
  - USART functionality and wakeup from Stop mode
  - Convenient baud rate programming independent from the PCLK reprogramming
- Auto baud rate detection
- Programmable data word length (7, 8 or 9 bits)
- Programmable data order with MSB-first or LSB-first shifting
- Configurable stop bits (1 or 2 stop bits)
- Synchronous mode and clock output for synchronous communications
- Single-wire Half-duplex communications
- Continuous communications using DMA
- Received/transmitted bytes are buffered in reserved SRAM using centralized DMA
- Separate enable bits for transmitter and receiver
- Separate signal polarity control for transmission and reception
- Swappable Tx/Rx pin configuration
- Hardware flow control for modem and RS-485 transceiver

- Communication control/error detection flags
- Parity control:
  - Transmits parity bit
  - Checks parity of received data byte
- Fourteen interrupt sources with flags
- Multiprocessor communications
  The USART enters mute mode if the address does not match.
- Wakeup from mute mode (by idle line detection or address mark detection)

40.3 USART extended features

- LIN master synchronous break send capability and LIN slave break detection capability
  - 13-bit break generation and 10/11-bit break detection when USART is hardware configured for LIN
- IrDA SIR encoder decoder supporting 3/16 bit duration for normal mode
- Smartcard mode
  - Supports the T=0 and T=1 asynchronous protocols for smartcards as defined in the ISO/IEC 7816-3 standard
  - 0.5 and 1.5 stop bits for smartcard operation
- Support for ModBus communication
  - Timeout feature
  - CR/LF character recognition

40.4 USART implementation

The STM32L47x/L48x/L49x/L4Ax devices embed 3 USARTs, 2 UARTs and 1 LPUART. The *Table 246* describes the features supported by each peripheral.

Table 246. STM32L47x/L48x/L49x/L4Ax USART/UART/LPUART features

USART modes/features[1]	USART1	USART2	USART3	UART4	UART5	LPUART1
Hardware flow control for modem	X	X	X	X	X	X
Continuous communication using DMA	X	X	X	X	X	X
Multiprocessor communication	X	X	X	X	X	X
Synchronous mode	X	X	X	-	-	-
Smartcard mode	X	X	X	-	-	-
Single-wire Half-duplex communication	X	X	X	X	X	X
IrDA SIR ENDEC block	X	X	X	X	X	-
LIN mode	X	X	X	X	X	-
Dual clock domain and wakeup from Stop mode	X	X	X	X	X	X
Receiver timeout interrupt	X	X	X	X	X	-
Modbus communication	X	X	X	X	X	-
Auto baud rate detection	X (4 modes)					-
Driver Enable	X	X	X	X	X	X
LPUART/USART data length	7[2], 8 and 9 bits					

1. X = supported.
2. In 7-bit data length mode, Smartcard mode, LIN master mode and Auto baud rate (0x7F and 0x55 frames) detection are not supported.

Note: In the STM32L49x/L4Ax devices only, bit TCBGT in USART_ISR, bit TCBGTIE in USART_CR3 and bit TCBGTCF in USART_ICR are available, allowing detecting the character end of transmission without waiting until the end of the guard time completion.

40.5 USART functional description

Any USART bidirectional communication requires a minimum of two pins: Receive data In (RX) and Transmit data Out (TX):

- **RX**: Receive data Input.

  This is the serial data input. Oversampling techniques are used for data recovery by discriminating between valid incoming data and noise.

- **TX:** Transmit data Output.

  When the transmitter is disabled, the output pin returns to its I/O port configuration. When the transmitter is enabled and nothing is to be transmitted, the TX pin is at high level. In Single-wire and Smartcard modes, this I/O is used to transmit and receive the data.

Serial data are transmitted and received through these pins in normal USART mode. The frames are comprised of:

- An Idle Line prior to transmission or reception
- A start bit
- A data word (7, 8 or 9 bits) least significant bit first
- 0.5, 1, 1.5, 2 stop bits indicating that the frame is complete
- The USART interface uses a baud rate generator
- A status register (USART_ISR)
- Receive and transmit data registers (USART_RDR, USART_TDR)
- A baud rate register (USART_BRR)
- A guard-time register (USART_GTPR) in case of Smartcard mode.

Refer to *Section 40.8: USART registers on page 1384* for the definitions of each bit.

The following pin is required to interface in synchronous mode and Smartcard mode:

- **CK:** Clock output. This pin outputs the transmitter data clock for synchronous transmission corresponding to SPI master mode (no clock pulses on start bit and stop bit, and a software option to send a clock pulse on the last data bit). In parallel, data can be received synchronously on RX. This can be used to control peripherals that have shift registers. The clock phase and polarity are software programmable. In Smartcard mode, CK output can provide the clock to the smartcard.

The following pins are required in RS232 Hardware flow control mode:

- **CTS:** Clear To Send blocks the data transmission at the end of the current transfer when high
- **RTS:** Request to send indicates that the USART is ready to receive data (when low).

The following pin is required in RS485 Hardware control mode:

- **DE**: Driver Enable activates the transmission mode of the external transceiver.

Note: DE and RTS share the same pin.

Figure 418. USART block diagram

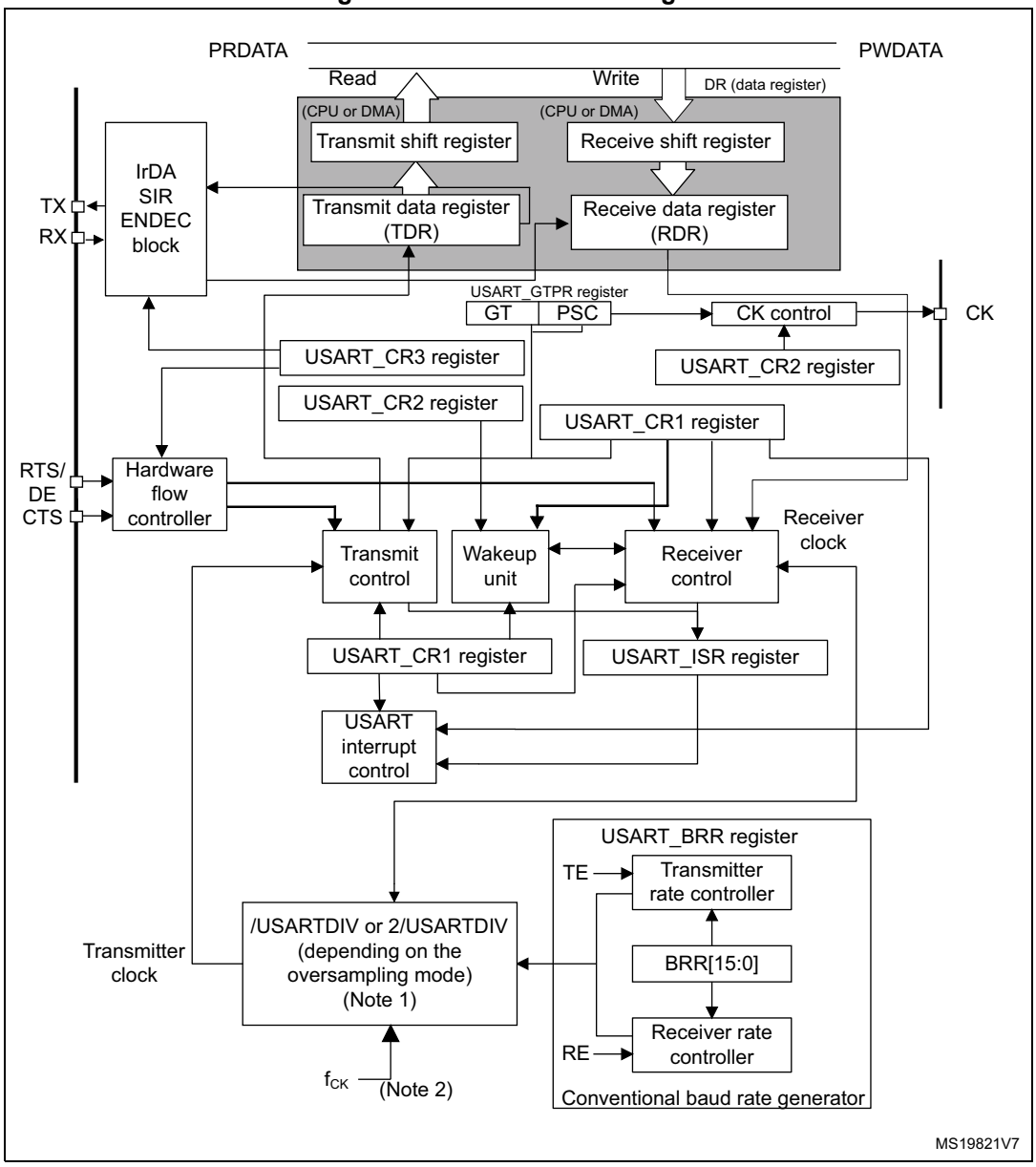

1. For details on coding USARTDIV in the USART_BRR register, refer to *Section 40.5.4: USART baud rate generation*.
2. f_{CK} can be f_{LSE}, f_{HSI}, f_{PCLK}, f_{SYS}.

40.5.1 USART character description

The word length can be selected as being either 7 or 8 or 9 bits by programming the M[1:0] bits in the USART_CR1 register (see *Figure 419*).

- 7-bit character length: M[1:0] = 10
- 8-bit character length: M[1:0] = 00
- 9-bit character length: M[1:0] = 01

Note: The 7-bit mode is supported only on some USARTs. In addition, not all modes are supported in 7-bit data length mode. Refer to Section 40.4: USART implementation for additional information.

By default, the signal (TX or RX) is in low state during the start bit. It is in high state during the stop bit.

These values can be inverted, separately for each signal, through polarity configuration control.

An ***Idle character*** is interpreted as an entire frame of “1”s (the number of “1”s includes the number of stop bits).

A ***Break character*** is interpreted on receiving “0”s for a frame period. At the end of the break frame, the transmitter inserts 2 stop bits.

Transmission and reception are driven by a common baud rate generator, the clock for each is generated when the enable bit is set respectively for the transmitter and receiver.

The details of each block is given below.

Figure 419. Word length programming

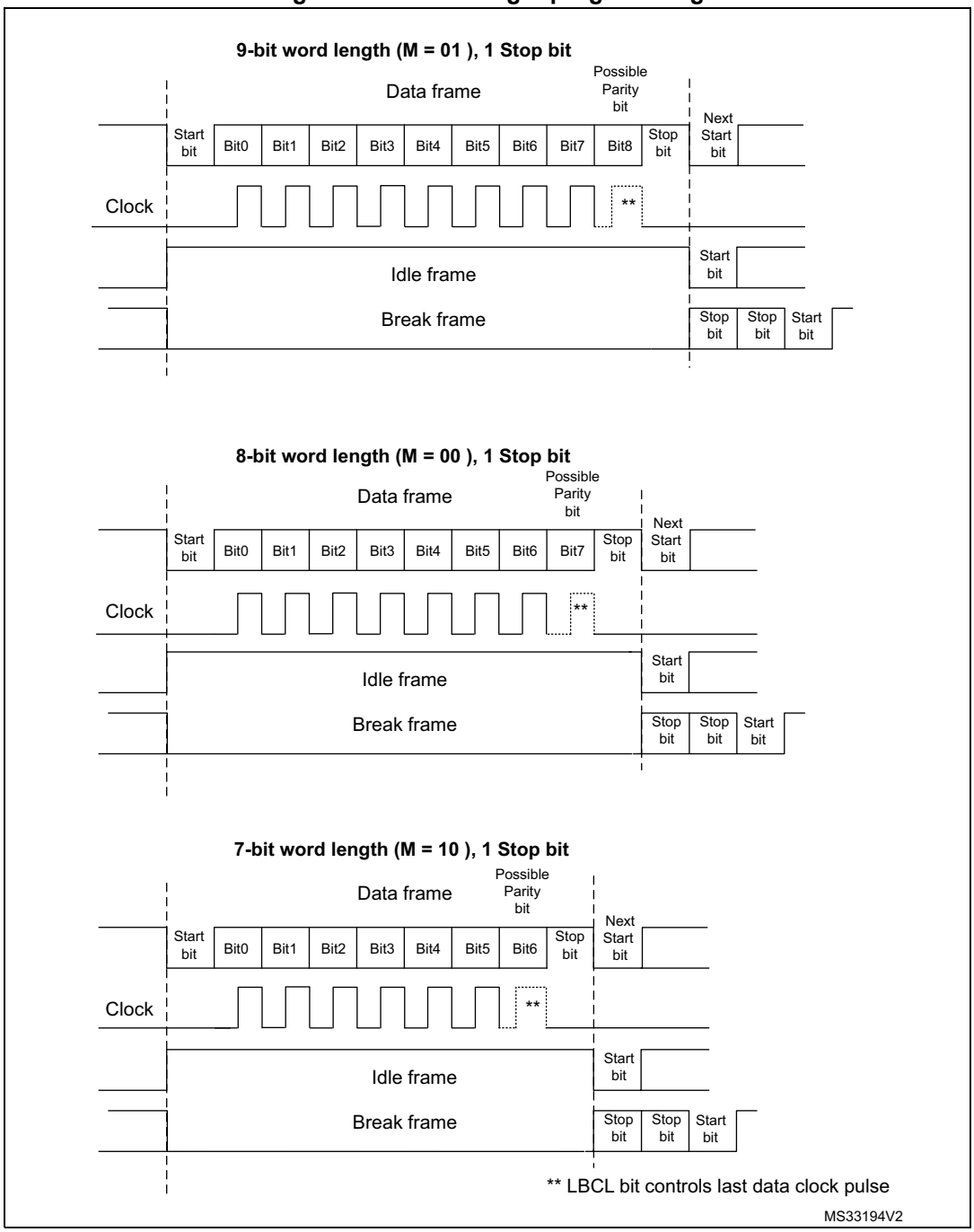

40.5.2 USART transmitter

The transmitter can send data words of either 7, 8 or 9 bits depending on the M bits status. The Transmit Enable bit (TE) must be set in order to activate the transmitter function. The data in the transmit shift register is output on the TX pin and the corresponding clock pulses are output on the CK pin.

Character transmission

During an USART transmission, data shifts out least significant bit first (default configuration) on the TX pin. In this mode, the USART_TDR register consists of a buffer (TDR) between the internal bus and the transmit shift register (see *Figure 418*).

Every character is preceded by a start bit which is a logic level low for one bit period. The character is terminated by a configurable number of stop bits.

The following stop bits are supported by USART: 0.5, 1, 1.5 and 2 stop bits.

Note: The TE bit must be set before writing the data to be transmitted to the USART_TDR.

The TE bit should not be reset during transmission of data. Resetting the TE bit during the transmission will corrupt the data on the TX pin as the baud rate counters will get frozen. The current data being transmitted will be lost.

An idle frame will be sent after the TE bit is enabled.

Configurable stop bits

The number of stop bits to be transmitted with every character can be programmed in Control register 2, bits 13,12.

- ***1 stop bit***: This is the default value of number of stop bits.
- ***2 stop bits***: This will be supported by normal USART, Single-wire and Modem modes.
- ***1.5 stop bits***: To be used in Smartcard mode.
- ***0.5 stop bit***: To be used when receiving data in Smartcard mode.

An idle frame transmission will include the stop bits.

A break transmission will be 10 low bits (when M[1:0] = 00) or 11 low bits (when M[1:0] = 01) or 9 low bits (when M[1:0] = 10) followed by 2 stop bits (see *Figure 420*). It is not possible to transmit long breaks (break of length greater than 9/10/11 low bits).

Figure 420. Configurable stop bits

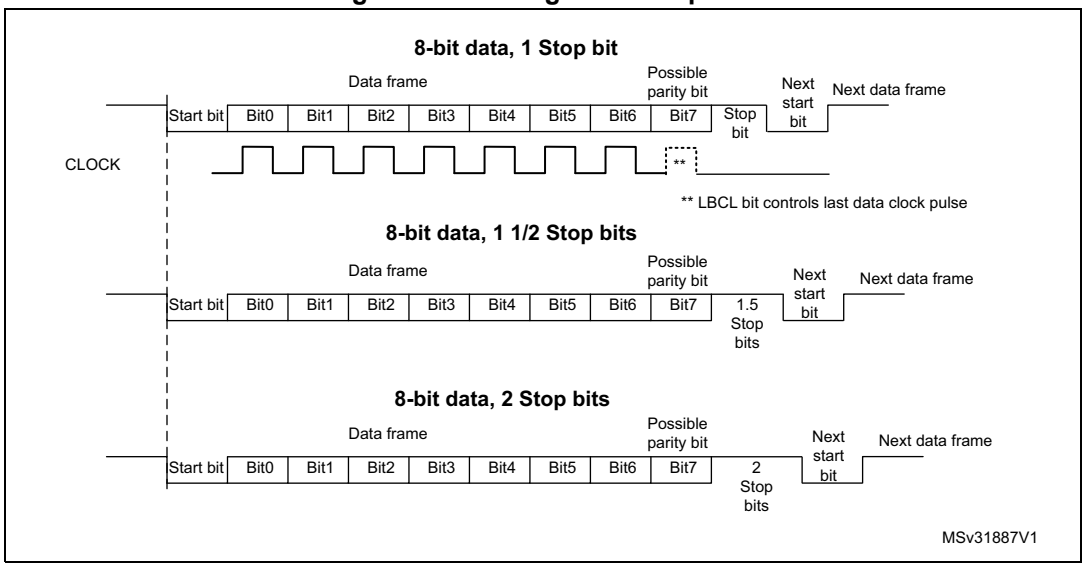

Character transmission procedure

1. Program the M bits in USART_CR1 to define the word length.
2. Select the desired baud rate using the USART_BRR register.
3. Program the number of stop bits in USART_CR2.
4. Enable the USART by writing the UE bit in USART_CR1 register to 1.
5. Select DMA enable (DMAT) in USART_CR3 if multibuffer communication is to take place. Configure the DMA register as explained in multibuffer communication.
6. Set the TE bit in USART_CR1 to send an idle frame as first transmission.
7. Write the data to send in the USART_TDR register (this clears the TXE bit). Repeat this for each data to be transmitted in case of single buffer.
8. After writing the last data into the USART_TDR register, wait until TC=1. This indicates that the transmission of the last frame is complete. This is required for instance when the USART is disabled or enters the Halt mode to avoid corrupting the last transmission.

Single byte communication

Clearing the TXE bit is always performed by a write to the transmit data register.

The TXE bit is set by hardware and it indicates:

- The data has been moved from the USART_TDR register to the shift register and the data transmission has started.
- The USART_TDR register is empty.
- The next data can be written in the USART_TDR register without overwriting the previous data.

This flag generates an interrupt if the TXEIE bit is set.

When a transmission is taking place, a write instruction to the USART_TDR register stores the data in the TDR register; next, the data is copied in the shift register at the end of the currently ongoing transmission.

When no transmission is taking place, a write instruction to the USART_TDR register places the data in the shift register, the data transmission starts, and the TXE bit is set.

If a frame is transmitted (after the stop bit) and the TXE bit is set, the TC bit goes high. An interrupt is generated if the TCIE bit is set in the USART_CR1 register.

After writing the last data in the USART_TDR register, it is mandatory to wait for TC=1 before disabling the USART or causing the microcontroller to enter the low-power mode (see *Figure 421: TC/TXE behavior when transmitting*).

Figure 421. TC/TXE behavior when transmitting

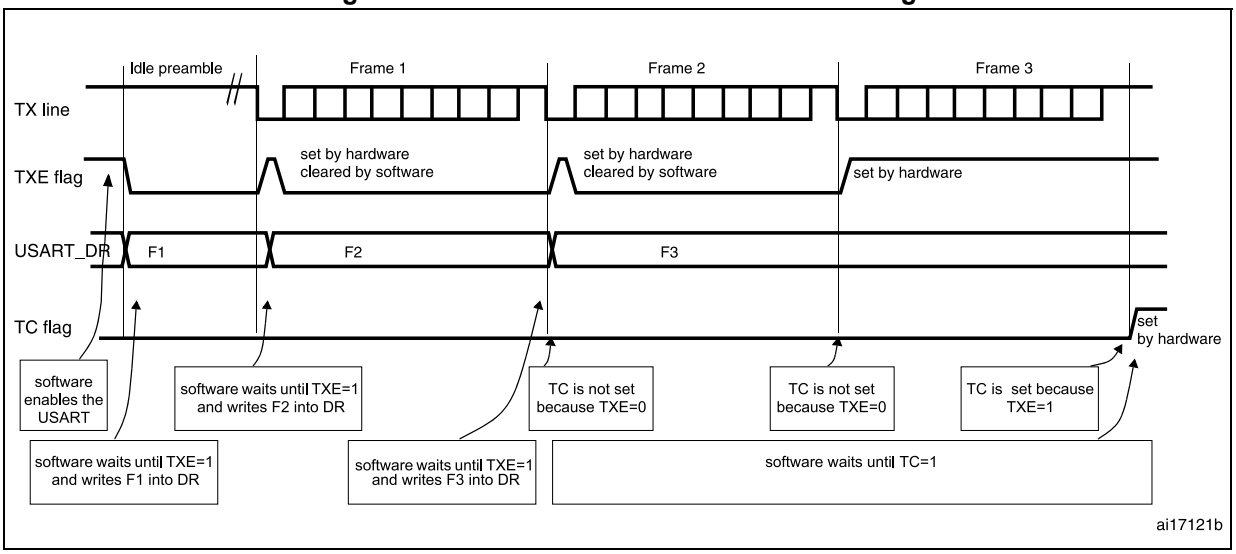

Break characters

Setting the SBKRQ bit transmits a break character. The break frame length depends on the M bits (see *Figure 419*).

If a '1' is written to the SBKRQ bit, a break character is sent on the TX line after completing the current character transmission. The SBKF bit is set by the write operation and it is reset by hardware when the break character is completed (during the stop bits after the break character). The USART inserts a logic 1 signal (STOP) for the duration of 2 bits at the end of the break frame to guarantee the recognition of the start bit of the next frame.

In the case the application needs to send the break character following all previously inserted data, including the ones not yet transmitted, the software should wait for the TXE flag assertion before setting the SBKRQ bit.

Idle characters

Setting the TE bit drives the USART to send an idle frame before the first data frame.

40.5.3 USART receiver

The USART can receive data words of either 7, 8 or 9 bits depending on the M bits in the USART_CR1 register.

Start bit detection

The start bit detection sequence is the same when oversampling by 16 or by 8.

In the USART, the start bit is detected when a specific sequence of samples is recognized. This sequence is: 1 1 1 0 X 0 X 0X 0X 0 X 0X 0.

Figure 422. Start bit detection when oversampling by 16 or 8

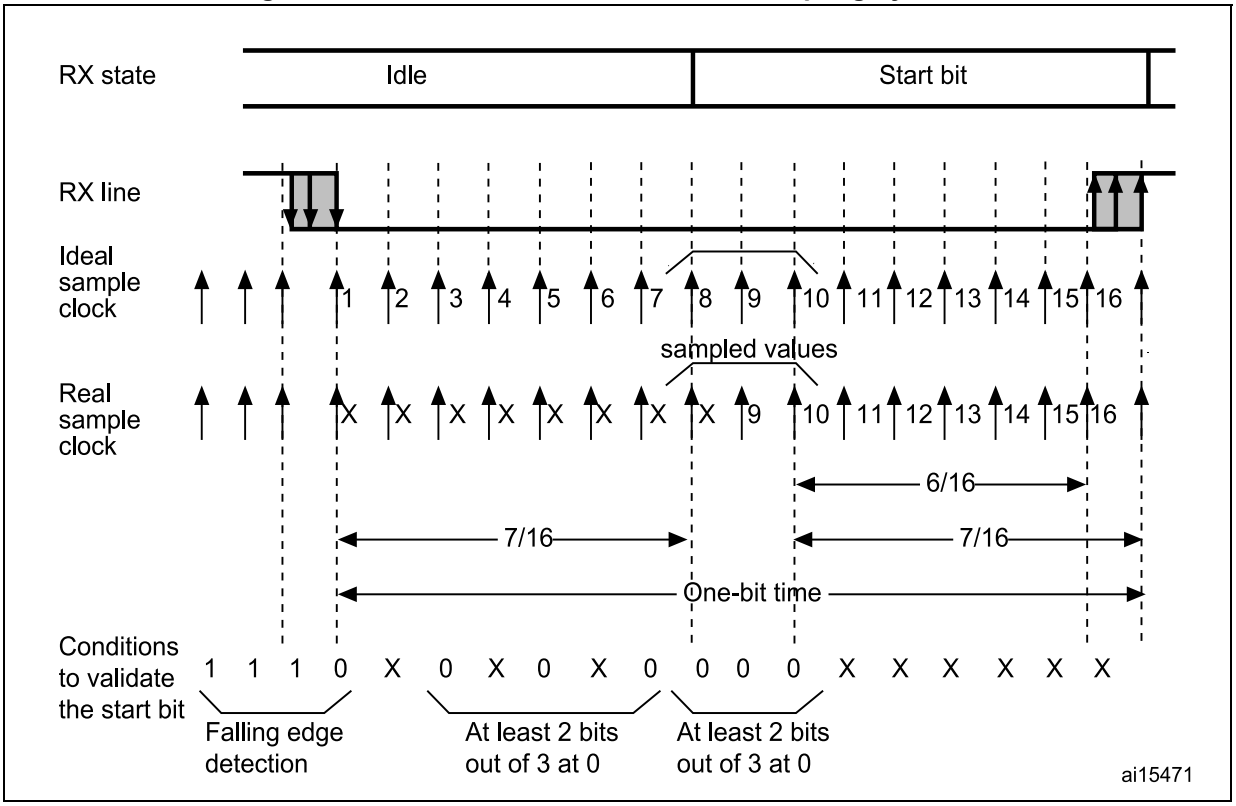

Note: If the sequence is not complete, the start bit detection aborts and the receiver returns to the idle state (no flag is set), where it waits for a falling edge.

The start bit is confirmed (RXNE flag set, interrupt generated if RXNEIE=1) if the 3 sampled bits are at 0 (first sampling on the 3rd, 5th and 7th bits finds the 3 bits at 0 and second sampling on the 8th, 9th and 10th bits also finds the 3 bits at 0).

The start bit is validated (RXNE flag set, interrupt generated if RXNEIE=1) but the NF noise flag is set if,

a) for both samplings, 2 out of the 3 sampled bits are at 0 (sampling on the 3rd, 5th and 7th bits and sampling on the 8th, 9th and 10th bits)

or

b) for one of the samplings (sampling on the 3rd, 5th and 7th bits or sampling on the 8th, 9th and 10th bits), 2 out of the 3 bits are found at 0.

If neither conditions a. or b. are met, the start detection aborts and the receiver returns to the idle state (no flag is set).

Character reception

During an USART reception, data shifts in least significant bit first (default configuration) through the RX pin. In this mode, the USART_RDR register consists of a buffer (RDR) between the internal bus and the receive shift register.

Character reception procedure

1. Program the M bits in USART_CR1 to define the word length.
2. Select the desired baud rate using the baud rate register USART_BRR
3. Program the number of stop bits in USART_CR2.
4. Enable the USART by writing the UE bit in USART_CR1 register to 1.
5. Select DMA enable (DMAR) in USART_CR3 if multibuffer communication is to take place. Configure the DMA register as explained in multibuffer communication.
6. Set the RE bit USART_CR1. This enables the receiver which begins searching for a start bit.

When a character is received:

- The RXNE bit is set to indicate that the content of the shift register is transferred to the RDR. In other words, data has been received and can be read (as well as its associated error flags).
- An interrupt is generated if the RXNEIE bit is set.
- The error flags can be set if a frame error, noise or an overrun error has been detected during reception. PE flag can also be set with RXNE.
- In multibuffer, RXNE is set after every byte received and is cleared by the DMA read of the Receive data Register.
- In single buffer mode, clearing the RXNE bit is performed by a software read to the USART_RDR register. The RXNE flag can also be cleared by writing 1 to the RXFRQ in the USART_RQR register. The RXNE bit must be cleared before the end of the reception of the next character to avoid an overrun error.

Break character

When a break character is received, the USART handles it as a framing error.

Idle character

When an idle frame is detected, there is the same procedure as for a received data character plus an interrupt if the IDLEIE bit is set.

Overrun error

An overrun error occurs when a character is received when RXNE has not been reset. Data can not be transferred from the shift register to the RDR register until the RXNE bit is cleared.

The RXNE flag is set after every byte received. An overrun error occurs if RXNE flag is set when the next data is received or the previous DMA request has not been serviced. When an overrun error occurs:

- The ORE bit is set.
- The RDR content will not be lost. The previous data is available when a read to USART_RDR is performed.
- The shift register will be overwritten. After that point, any data received during overrun is lost.
- An interrupt is generated if either the RXNEIE bit is set or EIE bit is set.
- The ORE bit is reset by setting the ORECF bit in the ICR register.

Note: The ORE bit, when set, indicates that at least 1 data has been lost. There are two possibilities:

- if RXNE=1, then the last valid data is stored in the receive register RDR and can be read,

- if RXNE=0, then it means that the last valid data has already been read and thus there is nothing to be read in the RDR. This case can occur when the last valid data is read in the RDR at the same time as the new (and lost) data is received.

Selecting the clock source and the proper oversampling method

The choice of the clock source is done through the Clock Control system (see Section Reset and clock control (RCC))). The clock source must be chosen before enabling the USART (by setting the UE bit).

The choice of the clock source must be done according to two criteria:

- Possible use of the USART in low-power mode
- Communication speed.

The clock source frequency is f_{CK}.

When the dual clock domain with the wakeup from Stop mode is supported, the clock source can be one of the following sources: PCLK (default), LSE, HSI16 or SYSCLK. Otherwise, the USART clock source is PCLK.

Choosing LSE or HSI16 as clock source may allow the USART to receive data while the MCU is in low-power mode. Depending on the received data and wakeup mode selection, the USART wakes up the MCU, when needed, in order to transfer the received data by software reading the USART_RDR register or by DMA.

For the other clock sources, the system must be active in order to allow USART communication.

The communication speed range (specially the maximum communication speed) is also determined by the clock source.

The receiver implements different user-configurable oversampling techniques for data recovery by discriminating between valid incoming data and noise. This allows a trade-off between the maximum communication speed and noise/clock inaccuracy immunity.

The oversampling method can be selected by programming the OVER8 bit in the USART_CR1 register and can be either 16 or 8 times the baud rate clock (*Figure 423* and *Figure 424*).

Depending on the application:

- Select oversampling by 8 (OVER8=1) to achieve higher speed (up to $f_{CK}/8$). In this case the maximum receiver tolerance to clock deviation is reduced (refer to *Section 40.5.5: Tolerance of the USART receiver to clock deviation on page 1358*)
- Select oversampling by 16 (OVER8=0) to increase the tolerance of the receiver to clock deviations. In this case, the maximum speed is limited to maximum $f_{CK}/16$ where f_{CK} is the clock source frequency.

Programming the ONEBIT bit in the USART_CR3 register selects the method used to evaluate the logic level. There are two options:

- The majority vote of the three samples in the center of the received bit. In this case, when the 3 samples used for the majority vote are not equal, the NF bit is set
- A single sample in the center of the received bit

  Depending on the application:
  - select the three samples' majority vote method (ONEBIT=0) when operating in a noisy environment and reject the data when a noise is detected (refer to *Figure 247*) because this indicates that a glitch occurred during the sampling.
  - select the single sample method (ONEBIT=1) when the line is noise-free to increase the receiver's tolerance to clock deviations (see *Section 40.5.5: Tolerance of the USART receiver to clock deviation on page 1358*). In this case the NF bit will never be set.

When noise is detected in a frame:

- The NF bit is set at the rising edge of the RXNE bit.
- The invalid data is transferred from the Shift register to the USART_RDR register.
- No interrupt is generated in case of single byte communication. However this bit rises at the same time as the RXNE bit which itself generates an interrupt. In case of multibuffer communication an interrupt will be issued if the EIE bit is set in the USART_CR3 register.

The NF bit is reset by setting NFCF bit in ICR register.

Note: Oversampling by 8 is not available in LIN, Smartcard and IrDA modes. In those modes, the OVER8 bit is forced to '0' by hardware.

Figure 423. Data sampling when oversampling by 16

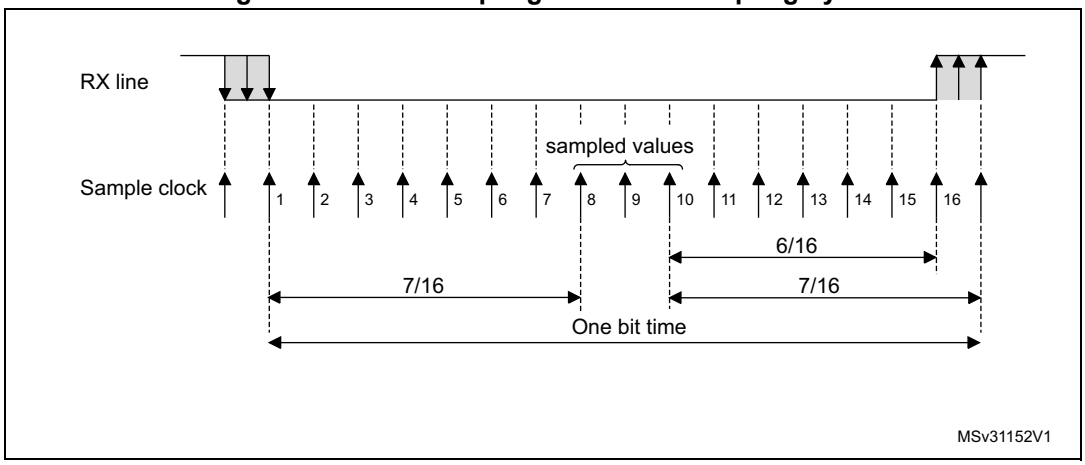

Figure 424. Data sampling when oversampling by 8

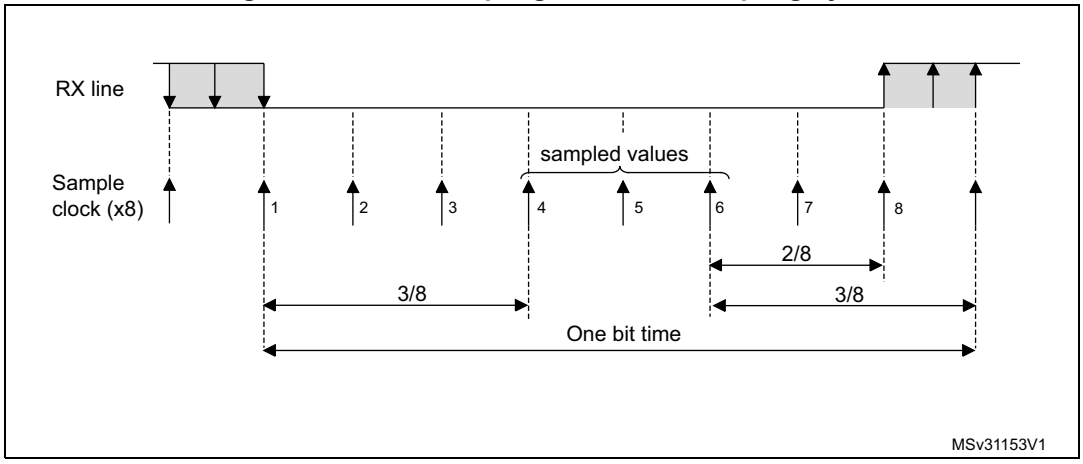

Table 247. Noise detection from sampled data

Sampled value	NE status	Received bit value
000	0	0
001	1	0
010	1	0
011	1	1
100	1	0
101	1	1
110	1	1
111	0	1

Framing error

A framing error is detected when the stop bit is not recognized on reception at the expected time, following either a de-synchronization or excessive noise.

When the framing error is detected:

- The FE bit is set by hardware
- The invalid data is transferred from the Shift register to the USART_RDR register.
- No interrupt is generated in case of single byte communication. However this bit rises at the same time as the RXNE bit which itself generates an interrupt. In case of multibuffer communication an interrupt will be issued if the EIE bit is set in the USART_CR3 register.

The FE bit is reset by writing 1 to the FECF in the USART_ICR register.

Configurable stop bits during reception

The number of stop bits to be received can be configured through the control bits of Control Register 2 - it can be either 1 or 2 in normal mode and 0.5 or 1.5 in Smartcard mode.

- ***0.5 stop bit (reception in Smartcard mode)****: No sampling is done for 0.5 stop bit. As a consequence, no framing error and no break frame can be detected when 0.5 stop bit is selected.*
- ***1 stop bit***: Sampling for 1 stop Bit is done on the 8th, 9th and 10th samples.
- ***1.5 stop bits (Smartcard mode)***: When transmitting in Smartcard mode, the device must check that the data is correctly sent. Thus the receiver block must be enabled (RE =1 in the USART_CR1 register) and the stop bit is checked to test if the smartcard has detected a parity error. In the event of a parity error, the smartcard forces the data signal low during the sampling - NACK signal-, which is flagged as a framing error. Then, the FE flag is set with the RXNE at the end of the 1.5 stop bits. Sampling for 1.5 stop bits is done on the 16th, 17th and 18th samples (1 baud clock period after the beginning of the stop bit). The 1.5 stop bits can be decomposed into 2 parts: one 0.5 baud clock period during which nothing happens, followed by 1 normal stop bit period during which sampling occurs halfway through. Refer to *Section 40.5.13: USART Smartcard mode on page 1369* for more details.
- ***2 stop bits***: Sampling for 2 stop bits is done on the 8th, 9th and 10th samples of the first stop bit. If a framing error is detected during the first stop bit the framing error flag will be set. The second stop bit is not checked for framing error. The RXNE flag will be set at the end of the first stop bit.

40.5.4 USART baud rate generation

The baud rate for the receiver and transmitter (Rx and Tx) are both set to the same value as programmed in the USART_BRR register.

Equation 1: Baud rate for standard USART (SPI mode included) (OVER8 = 0 or 1)

In case of oversampling by 16, the equation is:

$$\text{Tx/Rx baud} = \frac{f_{CK}}{\text{USARTDIV}}$$

In case of oversampling by 8, the equation is:

$$\text{Tx/Rx baud} = \frac{2 \times f_{CK}}{\text{USARTDIV}}$$

Equation 2: Baud rate in Smartcard, LIN and IrDA modes (OVER8 = 0)

In Smartcard, LIN and IrDA modes, only Oversampling by 16 is supported:

$$\text{Tx/Rx baud} = \frac{f_{CK}}{\text{USARTDIV}}$$

USARTDIV is an unsigned fixed point number that is coded on the USART_BRR register.

- When OVER8 = 0, BRR = USARTDIV.
- When OVER8 = 1
  - BRR[2:0] = USARTDIV[3:0] shifted 1 bit to the right.
  - BRR[3] must be kept cleared.
  - BRR[15:4] = USARTDIV[15:4]

Note: The baud counters are updated to the new value in the baud registers after a write operation to USART_BRR. Hence the baud rate register value should not be changed during communication.

In case of oversampling by 16 or 8, USARTDIV must be greater than or equal to 16d.

How to derive USARTDIV from USART_BRR register values

Example 1

To obtain 9600 baud with f_{CK} = 8 MHz.

- In case of oversampling by 16:
  USARTDIV = 8 000 000/9600
  BRR = USARTDIV = 833d = 0341h
- In case of oversampling by 8:
  USARTDIV = 2 * 8 000 000/9600
  USARTDIV = 1666,66 (1667d = 683h)
  BRR[3:0] = 3h << 1 = 1h
  BRR = 0x681

Example 2

To obtain 921.6 Kbaud with f_{CK} = 48 MHz.

- In case of oversampling by 16:
  USARTDIV = 48 000 000/921 600
  BRR = USARTDIV = 52d = 34h
- In case of oversampling by 8:
  USARTDIV = 2 * 48 000 000/921 600
  USARTDIV = 104 (104d = 68h)
  BRR[3:0] = USARTDIV[3:0] >> 1 = 8h >> 1 = 4h
  BRR = 0x64

Table 248. Error calculation for programmed baud rates at f_{CK} = 72MHz in both cases of oversampling by 16 or by 8(1)

Baud rate		Oversampling by 16 (OVER8 = 0)			Oversampling by 8 (OVER8 = 1)		
S.No	Desired	Actual	BRR	% Error = (Calculated - Desired)B.Rate / Desired B.Rate	Actual	BRR	% Error
1	2.4 KBps	2.4 KBps	0x7530	0	2.4 KBps	0xEA60	0
2	9.6 KBps	9.6 KBps	0x1D4C	0	9.6 KBps	0x3A94	0
3	19.2 KBps	19.2 KBps	0xEA6	0	19.2 KBps	0x1D46	0
4	38.4 KBps	38.4 KBps	0x753	0	38.4 KBps	0xEA3	0
5	57.6 KBps	57.6 KBps	0x4E2	0	57.6 KBps	0x9C2	0
6	115.2 KBps	115.2 KBps	0x271	0	115.2 KBps	0x4E1	0
7	230.4 KBps	230.03KBps	0x139	0.16	230.4 KBps	0x270	0
8	460.8 KBps	461.54KBps	0x9C	0.16	460.06KBps	0x134	0.16
9	921.6 KBps	923.08KBps	0x4E	0.16	923.07KBps	0x96	0.16
10	2 MBps	2 MBps	0x24	0	2 MBps	0x44	0
11	3 MBps	3 MBps	0x18	0	3 MBps	0x30	0
12	4MBps	4MBps	0x12	0	4MBps	0x22	0
13	5MBps	N.A	N.A	N.A	4965.51KBps	0x16	0.69
14	6MBps	N.A	N.A	N.A	6MBps	0x14	0
15	7MBps	N.A	N.A	N.A	6857.14KBps	0x12	2
16	9MBps	N.A	N.A	N.A	9MBps	0x10	0

1. The lower the CPU clock the lower the accuracy for a particular baud rate. The upper limit of the achievable baud rate can be fixed with these data.

40.5.5 Tolerance of the USART receiver to clock deviation

The asynchronous receiver of the USART works correctly only if the total clock system deviation is less than the tolerance of the USART receiver. The causes which contribute to the total deviation are:

- DTRA: Deviation due to the transmitter error (which also includes the deviation of the transmitter's local oscillator)
- DQUANT: Error due to the baud rate quantization of the receiver
- DREC: Deviation of the receiver's local oscillator
- DTCL: Deviation due to the transmission line (generally due to the transceivers which can introduce an asymmetry between the low-to-high transition timing and the high-to-low transition timing)

$$\text{DTRA} + \text{DQUANT} + \text{DREC} + \text{DTCL} + \text{DWU} < \text{USART receiver's tolerance}$$

where

DWU is the error due to sampling point deviation when the wakeup from Stop mode is used.

when M[1:0] = 01:

$$\text{DWU} = \frac{t_{\text{WUUSART}}}{11 \times \text{Tbit}}$$

when M[1:0] = 00:

$$\text{DWU} = \frac{t_{\text{WUUSART}}}{10 \times \text{Tbit}}$$

when M[1:0] = 10:

$$\text{DWU} = \frac{t_{\text{WUUSART}}}{9 \times \text{Tbit}}$$

t_{WUUSART} is the time between:

1. The detection of start bit falling edge
2. The instant when clock (requested by the peripheral) is ready and reaching the peripheral and regulator is ready.

The USART receiver can receive data correctly at up to the maximum tolerated deviation specified in *Table 249* and *Table 249* depending on the following choices:

- 9-, 10- or 11-bit character length defined by the M bits in the USART_CR1 register
- Oversampling by 8 or 16 defined by the OVER8 bit in the USART_CR1 register
- Bits BRR[3:0] of USART_BRR register are equal to or different from 0000.
- Use of 1 bit or 3 bits to sample the data, depending on the value of the ONEBIT bit in the USART_CR3 register.

Table 249. Tolerance of the USART receiver when BRR [3:0] = 0000

M bits	OVER8 bit = 0		OVER8 bit = 1	
	ONEBIT=0	ONEBIT=1	ONEBIT=0	ONEBIT=1
00	3.75%	4.375%	2.50%	3.75%
01	3.41%	3.97%	2.27%	3.41%
10	4.16%	4.86%	2.77%	4.16%

Table 250. Tolerance of the USART receiver when BRR [3:0] is different from 0000

M bits	OVER8 bit = 0		OVER8 bit = 1	
	ONEBIT=0	ONEBIT=1	ONEBIT=0	ONEBIT=1
00	3.33%	3.88%	2%	3%
01	3.03%	3.53%	1.82%	2.73%
10	3.7%	4.31%	2.22%	3.33%

Note: The data specified in Table 249 and Table 250 may slightly differ in the special case when the received frames contain some Idle frames of exactly 10-bit durations when M bits = 00 (11-bit durations when M bits =01 or 9- bit durations when M bits = 10).

40.5.6 USART auto baud rate detection

The USART is able to detect and automatically set the USART_BRR register value based on the reception of one character. Automatic baud rate detection is useful under two circumstances:

- The communication speed of the system is not known in advance
- The system is using a relatively low accuracy clock source and this mechanism allows the correct baud rate to be obtained without measuring the clock deviation.

The clock source frequency must be compatible with the expected communication speed (when oversampling by 16, the baud rate is between $f_{CK}/65535$ and $f_{CK}/16$. when oversampling by 8, the baud rate is between $f_{CK}/65535$ and $f_{CK}/8$).

Before activating the auto baud rate detection, the auto baud rate detection mode must be chosen. There are various modes based on different character patterns.

They can be chosen through the ABRMOD[1:0] field in the USART_CR2 register. In these auto baud rate modes, the baud rate is measured several times during the synchronization data reception and each measurement is compared to the previous one.

These modes are:

- **Mode 0**: Any character starting with a bit at 1. In this case the USART measures the duration of the Start bit (falling edge to rising edge).
- **Mode 1:** Any character starting with a 10xx bit pattern. In this case, the USART measures the duration of the Start and of the 1st data bit. The measurement is done falling edge to falling edge, ensuring better accuracy in the case of slow signal slopes.
- **Mode 2**: A 0x7F character frame (it may be a 0x7F character in LSB first mode or a 0xFE in MSB first mode). In this case, the baud rate is updated first at the end of the

start bit (BRs), then at the end of bit 6 (based on the measurement done from falling edge to falling edge: BR6). Bit 0 to bit 6 are sampled at BRs while further bits of the character are sampled at BR6.

- **Mode 3**: A 0x55 character frame. In this case, the baud rate is updated first at the end of the start bit (BRs), then at the end of bit 0 (based on the measurement done from falling edge to falling edge: BR0), and finally at the end of bit 6 (BR6). Bit 0 is sampled at BRs, bit 1 to bit 6 are sampled at BR0, and further bits of the character are sampled at BR6.

  In parallel, another check is performed for each intermediate transition of RX line. An error is generated if the transitions on RX are not sufficiently synchronized with the receiver (the receiver being based on the baud rate calculated on bit 0).

Prior to activating auto baud rate detection, the USART_BRR register must be initialized by writing a non-zero baud rate value.

The automatic baud rate detection is activated by setting the ABREN bit in the USART_CR2 register. The USART will then wait for the first character on the RX line. The auto baud rate operation completion is indicated by the setting of the ABRF flag in the USART_ISR register. If the line is noisy, the correct baud rate detection cannot be guaranteed. In this case the BRR value may be corrupted and the ABRE error flag will be set. This also happens if the communication speed is not compatible with the automatic baud rate detection range (bit duration not between 16 and 65536 clock periods (oversampling by 16) and not between 8 and 65536 clock periods (oversampling by 8)).

The RXNE interrupt will signal the end of the operation.

At any later time, the auto baud rate detection may be relaunched by resetting the ABRF flag (by writing a 0).

Note: If the USART is disabled (UE=0) during an auto baud rate operation, the BRR value may be corrupted.

40.5.7 Multiprocessor communication using USART

In multiprocessor communication, the following bits are to be kept cleared:

- LINEN bit in the USART_CR2 register,
- HDSEL, IREN and SCEN bits in the USART_CR3 register.

It is possible to perform multiprocessor communication with the USART (with several USARTs connected in a network). For instance one of the USARTs can be the master, its TX output connected to the RX inputs of the other USARTs. The others are slaves, their respective TX outputs are logically ANDed together and connected to the RX input of the master.

In multiprocessor configurations it is often desirable that only the intended message recipient should actively receive the full message contents, thus reducing redundant USART service overhead for all non addressed receivers.

The non addressed devices may be placed in mute mode by means of the muting function. In order to use the mute mode feature, the MME bit must be set in the USART_CR1 register.

In mute mode:

- None of the reception status bits can be set.
- All the receive interrupts are inhibited.
- The RWU bit in USART_ISR register is set to 1. RWU can be controlled automatically by hardware or by software, through the MMRQ bit in the USART_RQR register, under certain conditions.

The USART can enter or exit from mute mode using one of two methods, depending on the WAKE bit in the USART_CR1 register:

- Idle Line detection if the WAKE bit is reset,
- Address Mark detection if the WAKE bit is set.

Idle line detection (WAKE=0)

The USART enters mute mode when the MMRQ bit is written to 1 and the RWU is automatically set.

It wakes up when an Idle frame is detected. Then the RWU bit is cleared by hardware but the IDLE bit is not set in the USART_ISR register. An example of mute mode behavior using Idle line detection is given in *Figure 425*.

Figure 425. Mute mode using Idle line detection

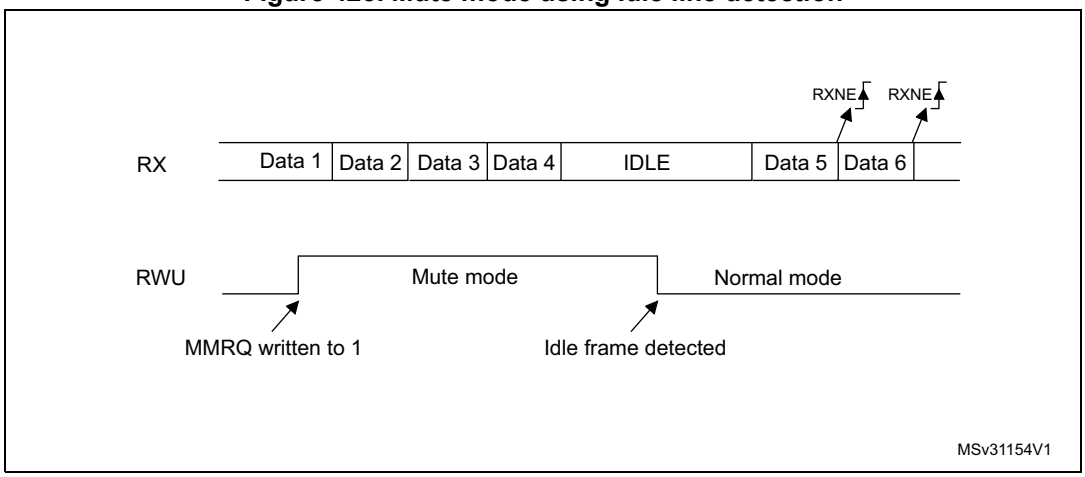

Note: If the MMRQ is set while the IDLE character has already elapsed, mute mode will not be entered (RWU is not set).

If the USART is activated while the line is IDLE, the idle state is detected after the duration of one IDLE frame (not only after the reception of one character frame).

4-bit/7-bit address mark detection (WAKE=1)

In this mode, bytes are recognized as addresses if their MSB is a ‘1’ otherwise they are considered as data. In an address byte, the address of the targeted receiver is put in the 4 or 7 LSBs. The choice of 7 or 4-bit address detection is done using the ADDM7 bit. This 4-bit/7-bit word is compared by the receiver with its own address which is programmed in the ADD bits in the USART_CR2 register.

Note: In 7-bit and 9-bit data modes, address detection is done on 6-bit and 8-bit addresses (ADD[5:0] and ADD[7:0]) respectively.

The USART enters mute mode when an address character is received which does not match its programmed address. In this case, the RWU bit is set by hardware. The RXNE flag is not set for this address byte and no interrupt or DMA request is issued when the USART enters mute mode.

The USART also enters mute mode when the MMRQ bit is written to 1. The RWU bit is also automatically set in this case.

The USART exits from mute mode when an address character is received which matches the programmed address. Then the RWU bit is cleared and subsequent bytes are received normally. The RXNE bit is set for the address character since the RWU bit has been cleared.

An example of mute mode behavior using address mark detection is given in *Figure 426*.

Figure 426. Mute mode using address mark detection

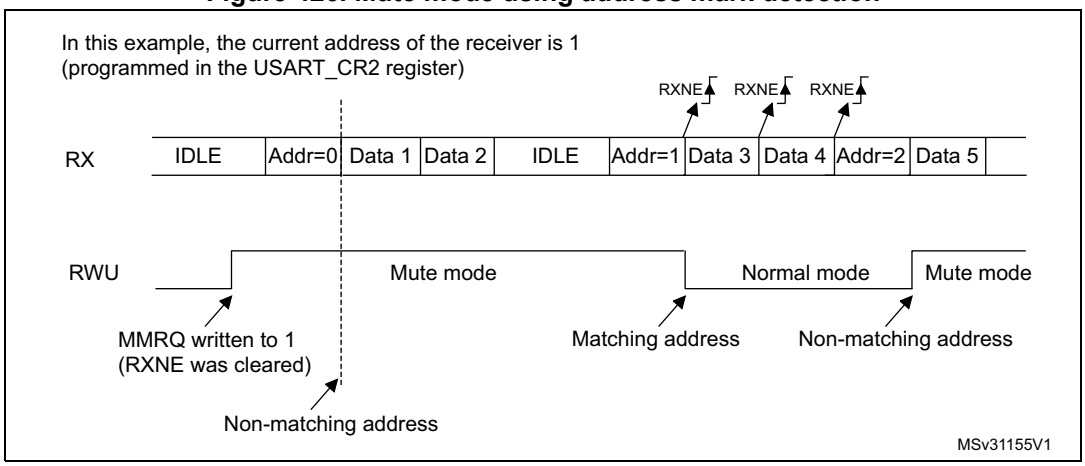

40.5.8 Modbus communication using USART

The USART offers basic support for the implementation of Modbus/RTU and Modbus/ASCII protocols. Modbus/RTU is a half duplex, block transfer protocol. The control part of the protocol (address recognition, block integrity control and command interpretation) must be implemented in software.

The USART offers basic support for the end of the block detection, without software overhead or other resources.

Modbus/RTU

In this mode, the end of one block is recognized by a “silence” (idle line) for more than 2 character times. This function is implemented through the programmable timeout function.

The timeout function and interrupt must be activated, through the RTOEN bit in the USART_CR2 register and the RTOIE in the USART_CR1 register. The value corresponding to a timeout of 2 character times (for example 22 x bit duration) must be programmed in the RTO register. when the receive line is idle for this duration, after the last stop bit is received, an interrupt is generated, informing the software that the current block reception is completed.

Modbus/ASCII

In this mode, the end of a block is recognized by a specific (CR/LF) character sequence. The USART manages this mechanism using the character match function.

By programming the LF ASCII code in the ADD[7:0] field and by activating the character match interrupt (CMIE=1), the software is informed when a LF has been received and can check the CR/LF in the DMA buffer.

40.5.9 USART parity control

Parity control (generation of parity bit in transmission and parity checking in reception) can be enabled by setting the PCE bit in the USART_CR1 register. Depending on the frame length defined by the M bits, the possible USART frame formats are as listed in *Table 251*.

Table 251. Frame formats

M bits	PCE bit	USART frame(1)
00	0	| SB | 8-bit data | STB |
00	1	| SB | 7-bit data | PB | STB |
01	0	| SB | 9-bit data | STB |
01	1	| SB | 8-bit data | PB | STB |
10	0	| SB | 7-bit data | STB |
10	1	| SB | 6-bit data | PB | STB |

1. Legends: SB: start bit, STB: stop bit, PB: parity bit. In the data register, the PB is always taking the MSB position (9th, 8th or 7th, depending on the M bits value).

Even parity

The parity bit is calculated to obtain an even number of “1s” inside the frame of the 6, 7 or 8 LSB bits (depending on M bits values) and the parity bit.

As an example, if data=00110101, and 4 bits are set, then the parity bit will be 0 if even parity is selected (PS bit in USART_CR1 = 0).

Odd parity

The parity bit is calculated to obtain an odd number of “1s” inside the frame made of the 6, 7 or 8 LSB bits (depending on M bits values) and the parity bit.

As an example, if data=00110101 and 4 bits set, then the parity bit will be 1 if odd parity is selected (PS bit in USART_CR1 = 1).

Parity checking in reception

If the parity check fails, the PE flag is set in the USART_ISR register and an interrupt is generated if PEIE is set in the USART_CR1 register. The PE flag is cleared by software writing 1 to the PECF in the USART_ICR register.

Parity generation in transmission

If the PCE bit is set in USART_CR1, then the MSB bit of the data written in the data register is transmitted but is changed by the parity bit (even number of “1s” if even parity is selected (PS=0) or an odd number of “1s” if odd parity is selected (PS=1)).

40.5.10 USART LIN (local interconnection network) mode

This section is relevant only when LIN mode is supported. Please refer to *Section 40.4: USART implementation on page 1342*.

The LIN mode is selected by setting the LINEN bit in the USART_CR2 register. In LIN mode, the following bits must be kept cleared:

- STOP[1:0] and CLKEN in the USART_CR2 register,
- SCEN, HDSEL and IREN in the USART_CR3 register.

LIN transmission

The procedure explained in *Section 40.5.2: USART transmitter* has to be applied for LIN Master transmission. It must be the same as for normal USART transmission with the following differences:

- Clear the M bits to configure 8-bit word length.
- Set the LINEN bit to enter LIN mode. In this case, setting the SBKRQ bit sends 13 ‘0’ bits as a break character. Then 2 bits of value ‘1’ are sent to allow the next start detection.

LIN reception

When LIN mode is enabled, the break detection circuit is activated. The detection is totally independent from the normal USART receiver. A break can be detected whenever it occurs, during Idle state or during a frame.

When the receiver is enabled (RE=1 in USART_CR1), the circuit looks at the RX input for a start signal. The method for detecting start bits is the same when searching break characters or data. After a start bit has been detected, the circuit samples the next bits exactly like for the data (on the 8th, 9th and 10th samples). If 10 (when the LBDL = 0 in USART_CR2) or 11 (when LBDL=1 in USART_CR2) consecutive bits are detected as ‘0, and are followed by a delimiter character, the LBDF flag is set in USART_ISR. If the LBDIE bit=1, an interrupt is generated. Before validating the break, the delimiter is checked for as it signifies that the RX line has returned to a high level.

If a ‘1’ is sampled before the 10 or 11 have occurred, the break detection circuit cancels the current detection and searches for a start bit again.

If the LIN mode is disabled (LINEN=0), the receiver continues working as normal USART, without taking into account the break detection.

If the LIN mode is enabled (LINEN=1), as soon as a framing error occurs (i.e. stop bit detected at ‘0’, which will be the case for any break frame), the receiver stops until the break detection circuit receives either a ‘1’, if the break word was not complete, or a delimiter character if a break has been detected.

The behavior of the break detector state machine and the break flag is shown on the *Figure 427: Break detection in LIN mode (11-bit break length - LBDL bit is set) on page 1365*.

Examples of break frames are given on *Figure 428: Break detection in LIN mode vs. Framing error detection on page 1366*.

Figure 427. Break detection in LIN mode (11-bit break length - LBDL bit is set)

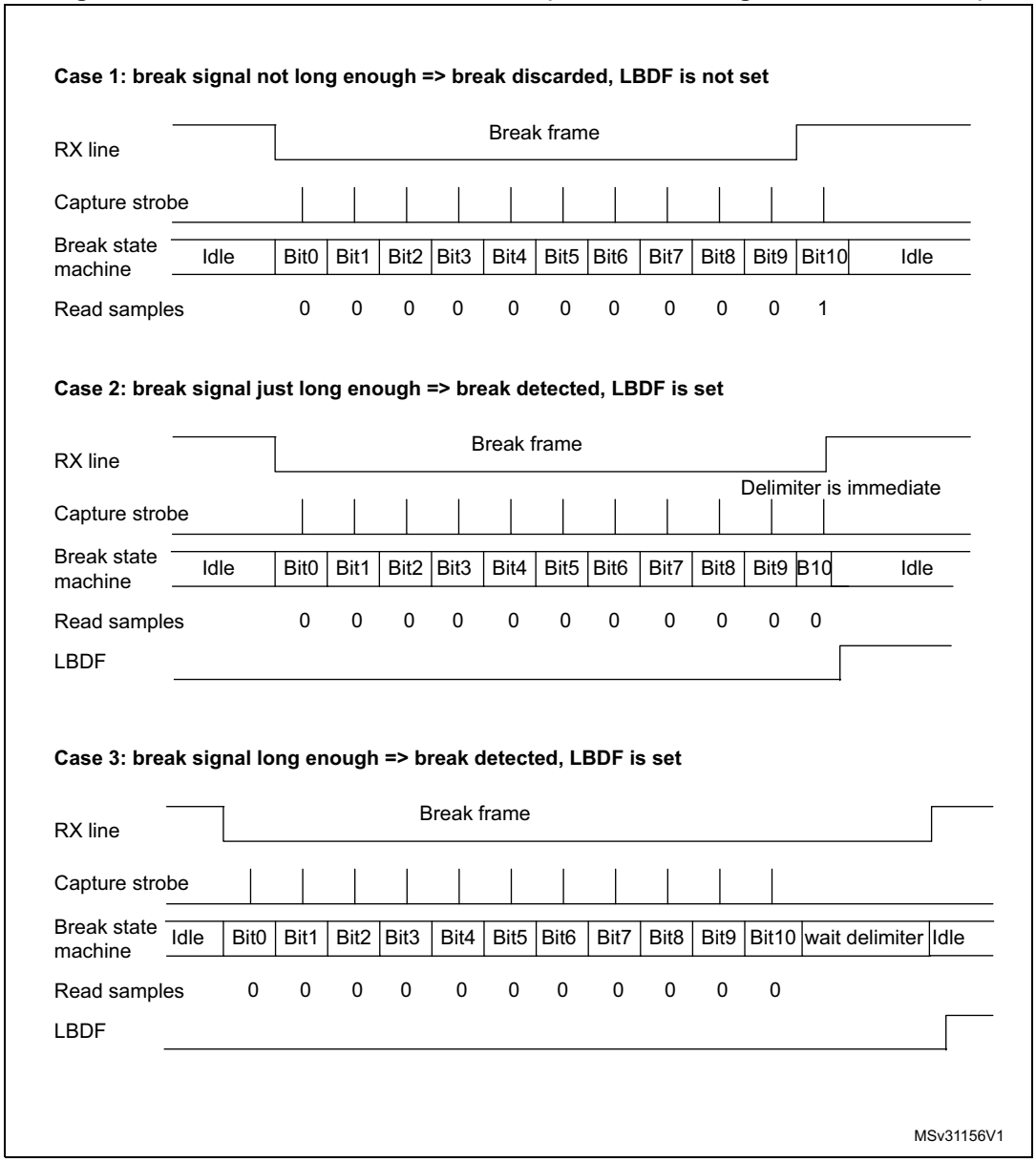

Figure 428. Break detection in LIN mode vs. Framing error detection

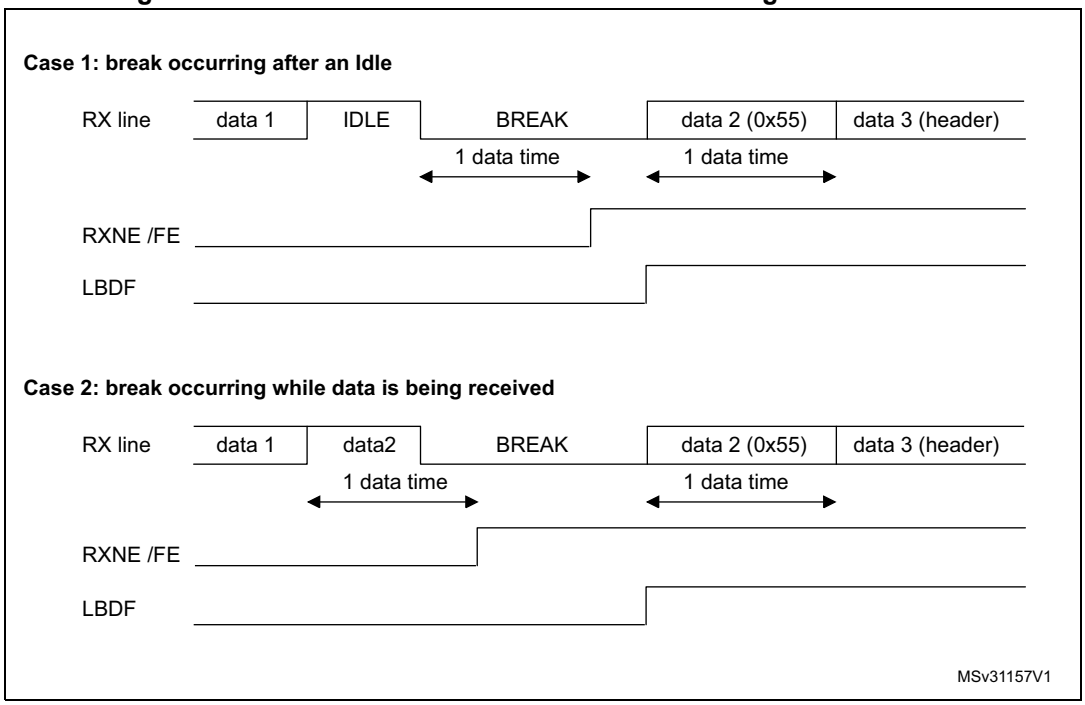

40.5.11 USART synchronous mode

The synchronous mode is selected by writing the CLKEN bit in the USART_CR2 register to 1. In synchronous mode, the following bits must be kept cleared:

- LINEN bit in the USART_CR2 register,
- SCEN, HDSEL and IREN bits in the USART_CR3 register.

In this mode, the USART can be used to control bidirectional synchronous serial communications in master mode. The CK pin is the output of the USART transmitter clock. No clock pulses are sent to the CK pin during start bit and stop bit. Depending on the state of the LBCL bit in the USART_CR2 register, clock pulses are, or are not, generated during the last valid data bit (address mark). The CPOL bit in the USART_CR2 register is used to select the clock polarity, and the CPHA bit in the USART_CR2 register is used to select the phase of the external clock (see *Figure 429*, *Figure 430* and *Figure 431*).

During the Idle state, preamble and send break, the external CK clock is not activated.

In synchronous mode the USART transmitter works exactly like in asynchronous mode. But as CK is synchronized with TX (according to CPOL and CPHA), the data on TX is synchronous.

In this mode the USART receiver works in a different manner compared to the asynchronous mode. If RE=1, the data is sampled on CK (rising or falling edge, depending on CPOL and CPHA), without any oversampling. A setup and a hold time must be respected (which depends on the baud rate: 1/16 bit duration).

Note: The CK pin works in conjunction with the TX pin. Thus, the clock is provided only if the transmitter is enabled (TE=1) and data is being transmitted (the data register USART_TDR written). This means that it is not possible to receive synchronous data without transmitting data.

The LBCL, CPOL and CPHA bits have to be selected when the USART is disabled (UE=0) to ensure that the clock pulses function correctly.

Figure 429. USART example of synchronous transmission

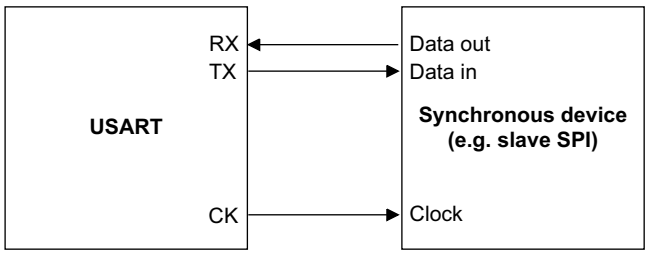

Figure 430. USART data clock timing diagram (M bits = 00**)**

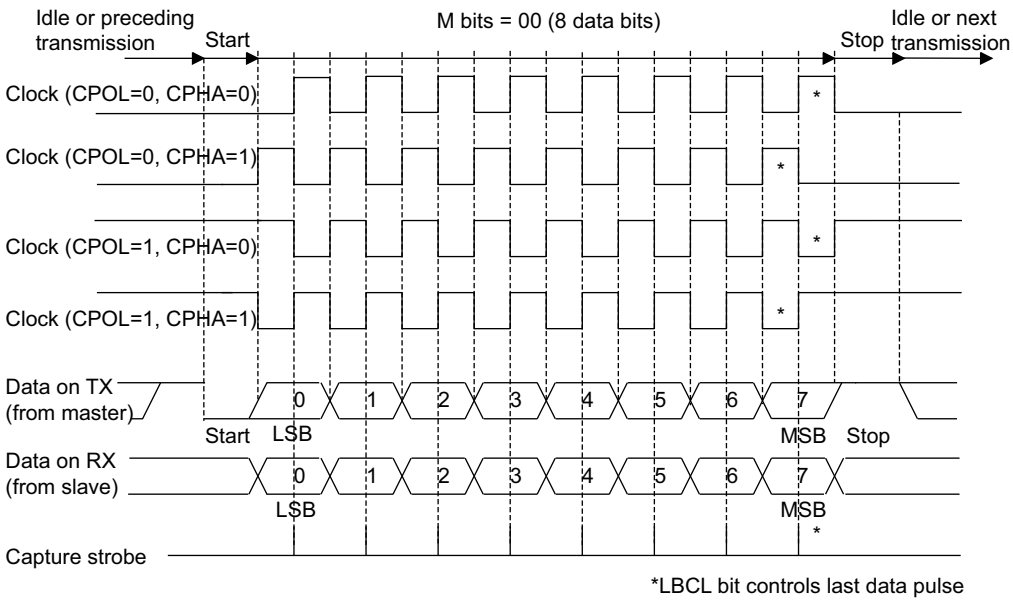

Figure 431. USART data clock timing diagram (M bits = 01)

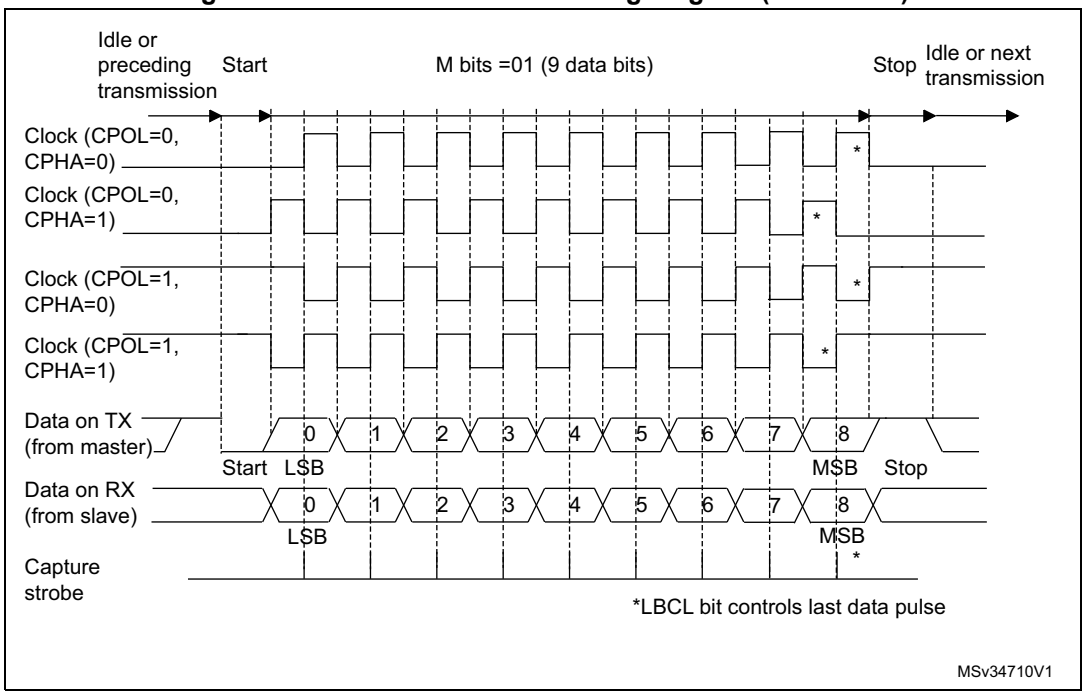

Figure 432. RX data setup/hold time

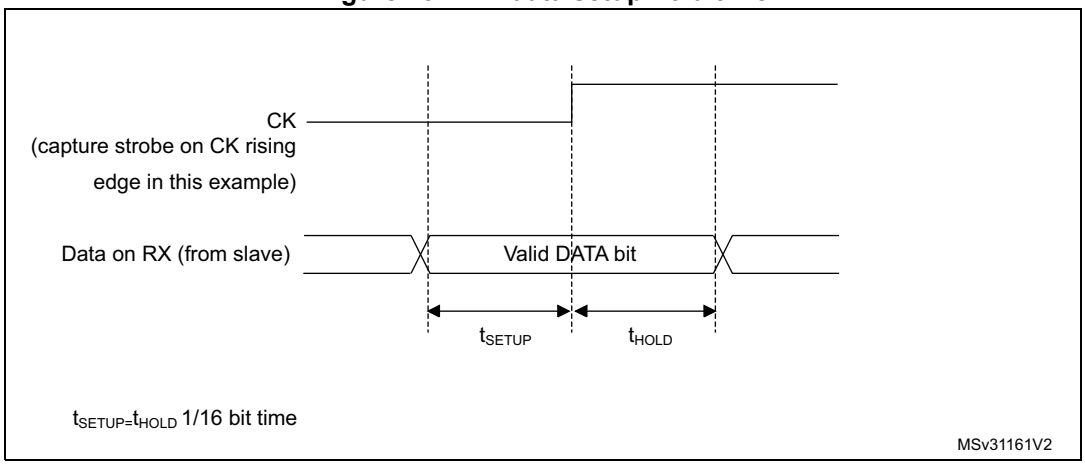

Note: The function of CK is different in Smartcard mode. Refer to Section 40.5.13: USART Smartcard mode for more details.

40.5.12 USART Single-wire Half-duplex communication

Single-wire Half-duplex mode is selected by setting the HDSEL bit in the USART_CR3 register. In this mode, the following bits must be kept cleared:

- LINEN and CLKEN bits in the USART_CR2 register,
- SCEN and IREN bits in the USART_CR3 register.

The USART can be configured to follow a Single-wire Half-duplex protocol where the TX and RX lines are internally connected. The selection between half- and Full-duplex communication is made with a control bit HDSEL in USART_CR3.

As soon as HDSEL is written to 1:

- The TX and RX lines are internally connected
- The RX pin is no longer used
- The TX pin is always released when no data is transmitted. Thus, it acts as a standard I/O in idle or in reception. It means that the I/O must be configured so that TX is configured as alternate function open-drain with an external pull-up.

Apart from this, the communication protocol is similar to normal USART mode. Any conflicts on the line must be managed by software (by the use of a centralized arbiter, for instance). In particular, the transmission is never blocked by hardware and continues as soon as data is written in the data register while the TE bit is set.

40.5.13 USART Smartcard mode

This section is relevant only when Smartcard mode is supported. Please refer to *Section 40.4: USART implementation on page 1342*.

Smartcard mode is selected by setting the SCEN bit in the USART_CR3 register. In Smartcard mode, the following bits must be kept cleared:

- LINEN bit in the USART_CR2 register,
- HDSEL and IREN bits in the USART_CR3 register.

Moreover, the CLKEN bit may be set in order to provide a clock to the smartcard.

The smartcard interface is designed to support asynchronous protocol for smartcards as defined in the ISO 7816-3 standard. Both T=0 (character mode) and T=1 (block mode) are supported.

The USART should be configured as:

- 8 bits plus parity: where word length is set to 8 bits and PCE=1 in the USART_CR1 register
- 1.5 stop bits when transmitting and receiving data: where STOP=11 in the USART_CR2 register. It is also possible to choose 0.5 stop bit for receiving.

In T=0 (character) mode, the parity error is indicated at the end of each character during the guard time period.

Figure 433 shows examples of what can be seen on the data line with and without parity error.

Figure 433. ISO 7816-3 asynchronous protocol

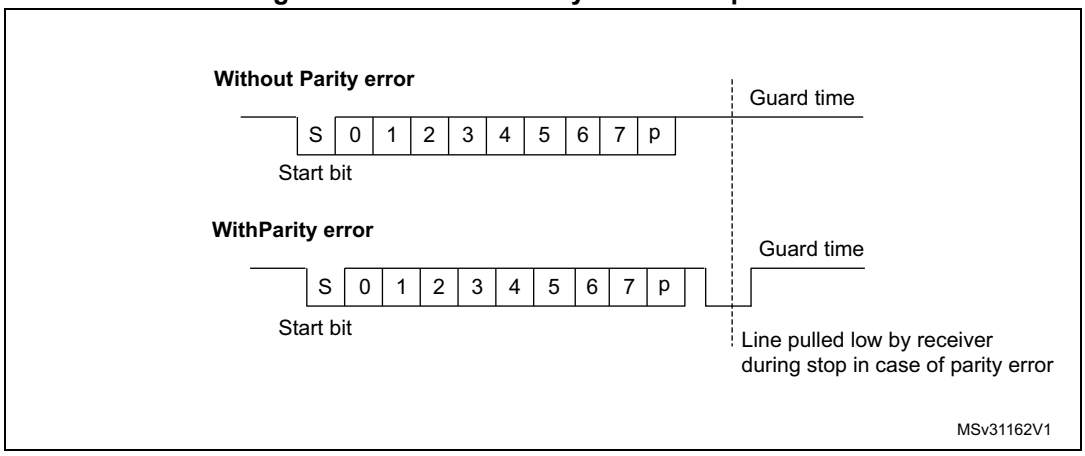

When connected to a smartcard, the TX output of the USART drives a bidirectional line that is also driven by the smartcard. The TX pin must be configured as open drain.

Smartcard mode implements a single wire half duplex communication protocol.

- Transmission of data from the transmit shift register is guaranteed to be delayed by a minimum of 1/2 baud clock. In normal operation a full transmit shift register starts shifting on the next baud clock edge. In Smartcard mode this transmission is further delayed by a guaranteed 1/2 baud clock.
- In transmission, if the smartcard detects a parity error, it signals this condition to the USART by driving the line low (NACK). This NACK signal (pulling transmit line low for 1 baud clock) causes a framing error on the transmitter side (configured with 1.5 stop bits). The USART can handle automatic re-sending of data according to the protocol. The number of retries is programmed in the SCARCNT bit field. If the USART continues receiving the NACK after the programmed number of retries, it stops transmitting and signals the error as a framing error. The TXE bit can be set using the TXFRQ bit in the USART_RQR register.
- Smartcard auto-retry in transmission: a delay of 2.5 baud periods is inserted between the NACK detection by the USART and the start bit of the repeated character. The TC bit is set immediately at the end of reception of the last repeated character (no guard-time). If the software wants to repeat it again, it must insure the minimum 2 baud periods required by the standard.
- If a parity error is detected during reception of a frame programmed with a 1.5 stop bits period, the transmit line is pulled low for a baud clock period after the completion of the receive frame. This is to indicate to the smartcard that the data transmitted to the USART has not been correctly received. A parity error is NACKed by the receiver if the NACK control bit is set, otherwise a NACK is not transmitted (to be used in T=1 mode). If the received character is erroneous, the RXNE/receive DMA request is not activated. According to the protocol specification, the smartcard must resend the same character. If the received character is still erroneous after the maximum number of retries specified in the SCARCNT bit field, the USART stops transmitting the NACK and signals the error as a parity error.
- Smartcard auto-retry in reception: the BUSY flag remains set if the USART NACKs the card but the card doesn’t repeat the character.

- In transmission, the USART inserts the Guard Time (as programmed in the Guard Time register) between two successive characters. As the Guard Time is measured after the stop bit of the previous character, the GT[7:0] register must be programmed to the desired CGT (Character Guard Time, as defined by the 7816-3 specification) minus 12 (the duration of one character).
- The assertion of the TC flag can be delayed by programming the Guard Time register. In normal operation, TC is asserted when the transmit shift register is empty and no further transmit requests are outstanding. In Smartcard mode an empty transmit shift register triggers the Guard Time counter to count up to the programmed value in the Guard Time register. TC is forced low during this time. When the Guard Time counter reaches the programmed value TC is asserted high.
- The TCBGT flag can be used to detect the end of data transfer without waiting for guard time completion. This flag is set just after the end of frame transmission and if no NACK has been received from the card.
- The de-assertion of TC flag is unaffected by Smartcard mode.
- If a framing error is detected on the transmitter end (due to a NACK from the receiver), the NACK is not detected as a start bit by the receive block of the transmitter. According to the ISO protocol, the duration of the received NACK can be 1 or 2 baud clock periods.
- On the receiver side, if a parity error is detected and a NACK is transmitted the receiver does not detect the NACK as a start bit.

Note: A break character is not significant in Smartcard mode. A 0x00 data with a framing error is treated as data and not as a break.

No Idle frame is transmitted when toggling the TE bit. The Idle frame (as defined for the other configurations) is not defined by the ISO protocol.

Figure 434 details how the NACK signal is sampled by the USART. In this example the USART is transmitting data and is configured with 1.5 stop bits. The receiver part of the USART is enabled in order to check the integrity of the data and the NACK signal.

Figure 434. Parity error detection using the 1.5 stop bits

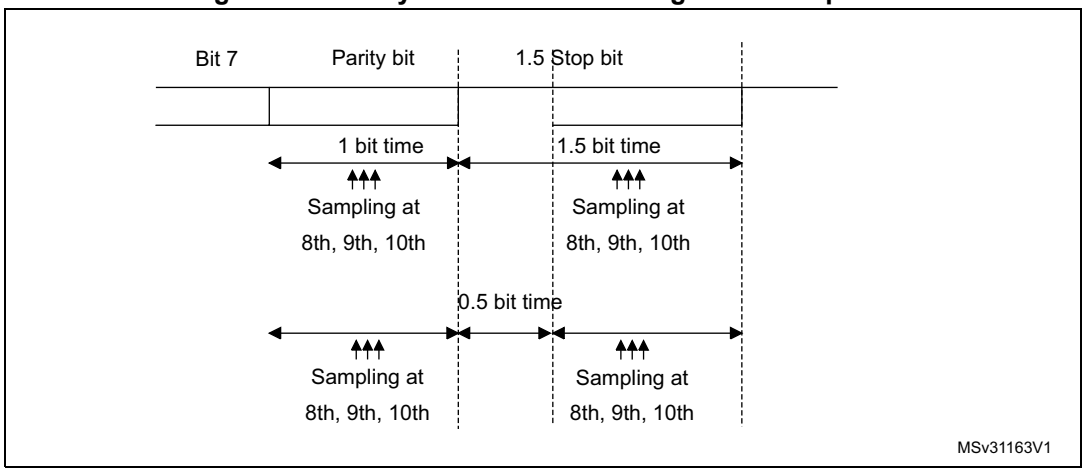

The USART can provide a clock to the smartcard through the CK output. In Smartcard mode, CK is not associated to the communication but is simply derived from the internal peripheral input clock through a 5-bit prescaler. The division ratio is configured in the prescaler register USART_GTPR. CK frequency can be programmed from $f_{CK}/2$ to $f_{CK}/62$, where f_{CK} is the peripheral input clock.

Block mode (T=1)

In T=1 (block) mode, the parity error transmission is deactivated, by clearing the NACK bit in the UART_CR3 register.

When requesting a read from the smartcard, in block mode, the software must enable the receiver Timeout feature by setting the RTOEN bit in the USART_CR2 register and program the RTO bits field in the RTOR register to the BWT (block wait time) - 11 value. If no answer is received from the card before the expiration of this period, the RTOF flag will be set and a timeout interrupt will be generated (if RTOIE bit in the USART_CR1 register is set). If the first character is received before the expiration of the period, it is signaled by the RXNE interrupt.

Note: The RXNE interrupt must be enabled even when using the USART in DMA mode to read from the smartcard in block mode. In parallel, the DMA must be enabled only after the first received byte.

After the reception of the first character (RXNE interrupt), the RTO bit fields in the RTOR register must be programmed to the CWT (character wait time) - 11 value, in order to allow the automatic check of the maximum wait time between two consecutive characters. This time is expressed in baudtime units. If the smartcard does not send a new character in less than the CWT period after the end of the previous character, the USART signals this to the software through the RTOF flag and interrupt (when RTOIE bit is set).

Note: The RTO counter starts counting:

- From the end of the stop bit in case STOP = 00.

- From the end of the second stop bit in case of STOP = 10.

- 1 bit duration after the beginning of the STOP bit in case STOP = 11.

- From the beginning of the STOP bit in case STOP = 01.

As in the Smartcard protocol definition, the BWT/CWT values are defined from the beginning (start bit) of the last character. The RTO register must be programmed to BWT - 11 or CWT -11, respectively, taking into account the length of the last character itself.

A block length counter is used to count all the characters received by the USART. This counter is reset when the USART is transmitting (TXE=0). The length of the block is communicated by the smartcard in the third byte of the block (prologue field). This value must be programmed to the BLEN field in the USART_RTOR register. when using DMA mode, before the start of the block, this register field must be programmed to the minimum value (0x0). with this value, an interrupt is generated after the 4th received character. The software must read the LEN field (third byte), its value must be read from the receive buffer.

In interrupt driven receive mode, the length of the block may be checked by software or by programming the BLEN value. However, before the start of the block, the maximum value of BLEN (0xFF) may be programmed. The real value will be programmed after the reception of the third character.

If the block is using the LRC longitudinal redundancy check (1 epilogue byte), the BLEN=LEN. If the block is using the CRC mechanism (2 epilogue bytes), BLEN=LEN+1 must be programmed. The total block length (including prologue, epilogue and information fields) equals BLEN+4. The end of the block is signaled to the software through the EOBF flag and interrupt (when EOBIE bit is set).

In case of an error in the block length, the end of the block is signaled by the RTO interrupt (Character wait Time overflow).

Note: The error checking code (LRC/CRC) must be computed/verified by software.

Direct and inverse convention

The Smartcard protocol defines two conventions: direct and inverse.

The direct convention is defined as: LSB first, logical bit value of 1 corresponds to a H state of the line and parity is even. In order to use this convention, the following control bits must be programmed: MSBFIRST=0, DATAINV=0 (default values).

The inverse convention is defined as: MSB first, logical bit value 1 corresponds to an L state on the signal line and parity is even. In order to use this convention, the following control bits must be programmed: MSBFIRST=1, DATAINV=1.

Note: When logical data values are inverted (0=H, 1=L), the parity bit is also inverted in the same way.

In order to recognize the card convention, the card sends the initial character, TS, as the first character of the ATR (Answer To Reset) frame. The two possible patterns for the TS are: LHHL LLL LLH and LHHL HHH LLH.

- (H) LHHL LLL LLH sets up the inverse convention: state L encodes value 1 and moment 2 conveys the most significant bit (MSB first). when decoded by inverse convention, the conveyed byte is equal to '3F'.
- (H) LHHL HHH LLH sets up the direct convention: state H encodes value 1 and moment 2 conveys the least significant bit (LSB first). when decoded by direct convention, the conveyed byte is equal to '3B'.

Character parity is correct when there is an even number of bits set to 1 in the nine moments 2 to 10.

As the USART does not know which convention is used by the card, it needs to be able to recognize either pattern and act accordingly. The pattern recognition is not done in hardware, but through a software sequence. Moreover, supposing that the USART is configured in direct convention (default) and the card answers with the inverse convention, TS = LHHL LLL LLH => the USART received character will be ‘03’ and the parity will be odd.

Therefore, two methods are available for TS pattern recognition:

Method 1

The USART is programmed in standard Smartcard mode/direct convention. In this case, the TS pattern reception generates a parity error interrupt and error signal to the card.

- The parity error interrupt informs the software that the card didn’t answer correctly in direct convention. Software then reprograms the USART for inverse convention
- In response to the error signal, the card retries the same TS character, and it will be correctly received this time, by the reprogrammed USART

Alternatively, in answer to the parity error interrupt, the software may decide to reprogram the USART and to also generate a new reset command to the card, then wait again for the TS.

Method 2

The USART is programmed in 9-bit/no-parity mode, no bit inversion. In this mode it receives any of the two TS patterns as:

(H) LHHL LLL LLH = 0x103 -> inverse convention to be chosen

(H) LHHL HHH LLH = 0x13B -> direct convention to be chosen

The software checks the received character against these two patterns and, if any of them match, then programs the USART accordingly for the next character reception.

If none of the two is recognized, a card reset may be generated in order to restart the negotiation.

40.5.14 USART IrDA SIR ENDEC block

This section is relevant only when IrDA mode is supported. Please refer to *Section 40.4: USART implementation on page 1342*.

IrDA mode is selected by setting the IREN bit in the USART_CR3 register. In IrDA mode, the following bits must be kept cleared:

- LINEN, STOP and CLKEN bits in the USART_CR2 register,
- SCEN and HDSEL bits in the USART_CR3 register.

The IrDA SIR physical layer specifies use of a Return to Zero, Inverted (RZI) modulation scheme that represents logic 0 as an infrared light pulse (see *Figure 435*).

The SIR Transmit encoder modulates the Non Return to Zero (NRZ) transmit bit stream output from USART. The output pulse stream is transmitted to an external output driver and infrared LED. USART supports only bit rates up to 115.2 Kbps for the SIR ENDEC. In normal mode the transmitted pulse width is specified as 3/16 of a bit period.

The SIR receive decoder demodulates the return-to-zero bit stream from the infrared detector and outputs the received NRZ serial bit stream to the USART. The decoder input is normally high (marking state) in the Idle state. The transmit encoder output has the opposite polarity to the decoder input. A start bit is detected when the decoder input is low.

- IrDA is a half duplex communication protocol. If the Transmitter is busy (when the USART is sending data to the IrDA encoder), any data on the IrDA receive line is ignored by the IrDA decoder and if the Receiver is busy (when the USART is receiving decoded data from the IrDA decoder), data on the TX from the USART to IrDA is not encoded. while receiving data, transmission should be avoided as the data to be transmitted could be corrupted.
- A 0 is transmitted as a high pulse and a 1 is transmitted as a 0. The width of the pulse is specified as 3/16th of the selected bit period in normal mode (see *Figure 436*).
- The SIR decoder converts the IrDA compliant receive signal into a bit stream for USART.
- The SIR receive logic interprets a high state as a logic one and low pulses as logic zeros.
- The transmit encoder output has the opposite polarity to the decoder input. The SIR output is in low state when Idle.

- The IrDA specification requires the acceptance of pulses greater than 1.41 µs. The acceptable pulse width is programmable. Glitch detection logic on the receiver end filters out pulses of width less than 2 PSC periods (PSC is the prescaler value programmed in the USART_GTPR). Pulses of width less than 1 PSC period are always rejected, but those of width greater than one and less than two periods may be accepted or rejected, those greater than 2 periods will be accepted as a pulse. The IrDA encoder/decoder doesn't work when PSC=0.
- The receiver can communicate with a low-power transmitter.
- In IrDA mode, the STOP bits in the USART_CR2 register must be configured to "1 stop bit".

IrDA low-power mode

Transmitter

In low-power mode the pulse width is not maintained at 3/16 of the bit period. Instead, the width of the pulse is 3 times the low-power baud rate which can be a minimum of 1.42 MHz.

Generally, this value is 1.8432 MHz (1.42 MHz < PSC< 2.12 MHz). A low-power mode programmable divisor divides the system clock to achieve this value.

Receiver

Receiving in low-power mode is similar to receiving in normal mode. For glitch detection the USART should discard pulses of duration shorter than 1 PSC period. A valid low is accepted only if its duration is greater than 2 periods of the IrDA low-power Baud clock (PSC value in the USART_GTPR).

Note: A pulse of width less than two and greater than one PSC period(s) may or may not be rejected.

The receiver set up time should be managed by software. The IrDA physical layer specification specifies a minimum of 10 ms delay between transmission and reception (IrDA is a half duplex protocol).

Figure 435. IrDA SIR ENDEC- block diagram

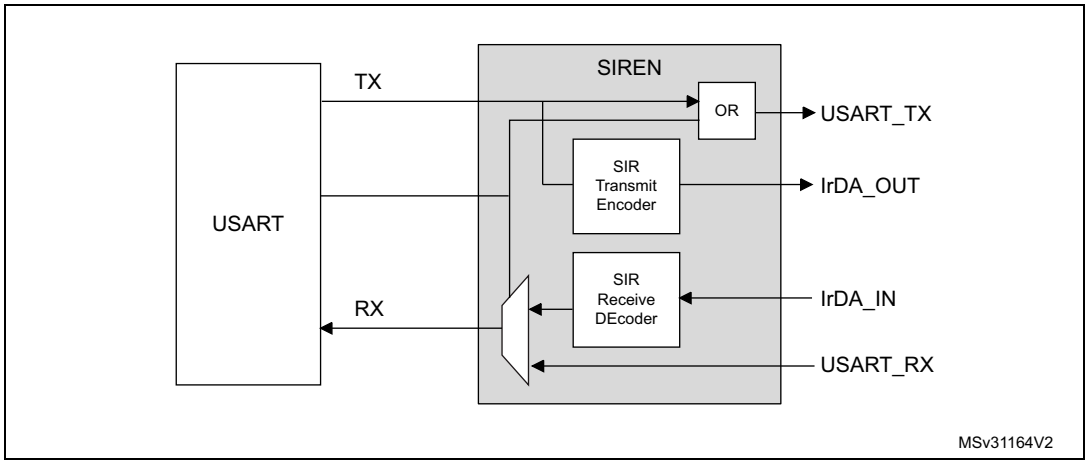

Figure 436. IrDA data modulation (3/16) -Normal Mode

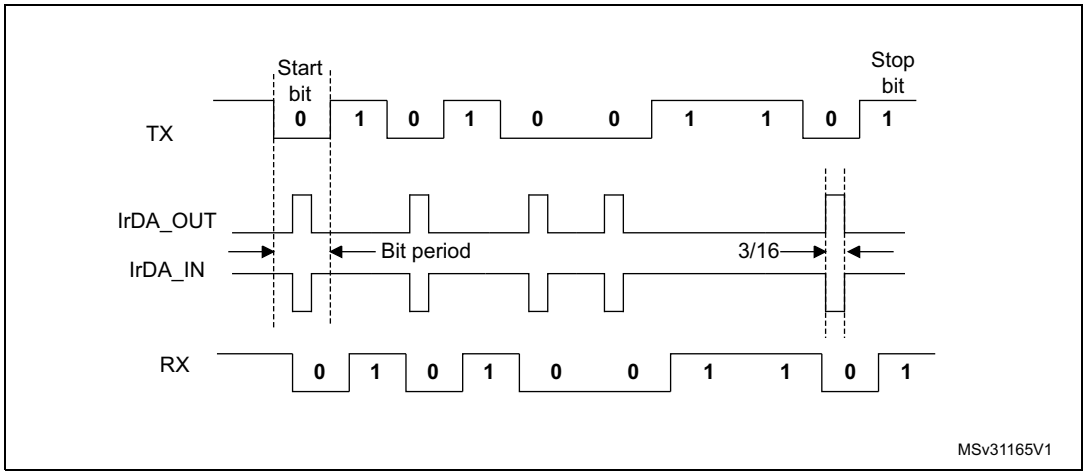

40.5.15 USART continuous communication in DMA mode

The USART is capable of performing continuous communication using the DMA. The DMA requests for Rx buffer and Tx buffer are generated independently.

Note: Please refer to Section 40.4: USART implementation on page 1342 to determine if the DMA mode is supported. If DMA is not supported, use the USART as explained in Section 40.5.2: USART transmitter or Section 40.5.3: USART receiver. To perform continuous communication, the user can clear the TXE/ RXNE flags In the USART_ISR register.

Transmission using DMA

DMA mode can be enabled for transmission by setting DMAT bit in the USART_CR3 register. Data is loaded from a SRAM area configured using the DMA peripheral (refer to *Section 11: Direct memory access controller (DMA) on page 337*) to the USART_TDR register whenever the TXE bit is set. To map a DMA channel for USART transmission, use the following procedure (x denotes the channel number):

1. Write the USART_TDR register address in the DMA control register to configure it as the destination of the transfer. The data is moved to this address from memory after each TXE event.
2. Write the memory address in the DMA control register to configure it as the source of the transfer. The data is loaded into the USART_TDR register from this memory area after each TXE event.
3. Configure the total number of bytes to be transferred to the DMA control register.
4. Configure the channel priority in the DMA register
5. Configure DMA interrupt generation after half/ full transfer as required by the application.
6. Clear the TC flag in the USART_ISR register by setting the TCCF bit in the USART_ICR register.
7. Activate the channel in the DMA register.

When the number of data transfers programmed in the DMA Controller is reached, the DMA controller generates an interrupt on the DMA channel interrupt vector.

In transmission mode, once the DMA has written all the data to be transmitted (the TCIF flag is set in the DMA_ISR register), the TC flag can be monitored to make sure that the USART

communication is complete. This is required to avoid corrupting the last transmission before disabling the USART or entering Stop mode. Software must wait until TC=1. The TC flag remains cleared during all data transfers and it is set by hardware at the end of transmission of the last frame.

Figure 437. Transmission using DMA

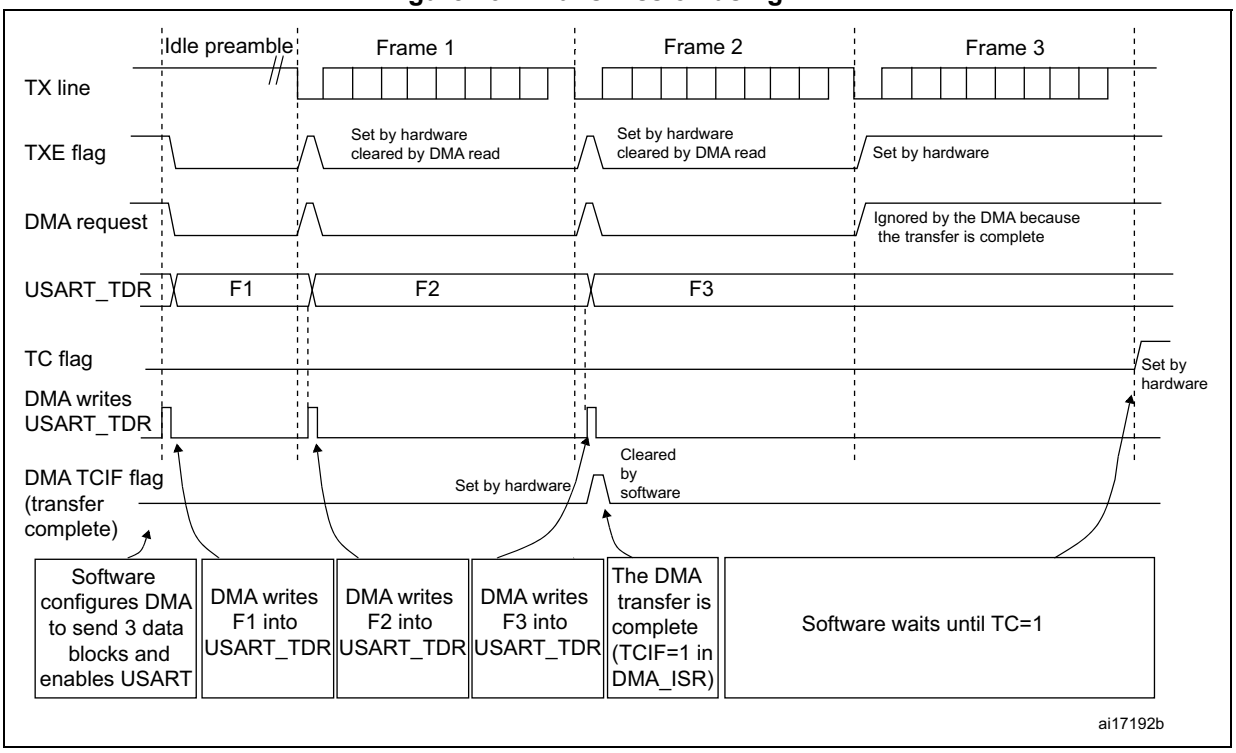

Reception using DMA

DMA mode can be enabled for reception by setting the DMAR bit in USART_CR3 register. Data is loaded from the USART_RDR register to a SRAM area configured using the DMA peripheral (refer to *Section 11: Direct memory access controller (DMA) on page 337*) whenever a data byte is received. To map a DMA channel for USART reception, use the following procedure:

1. Write the USART_RDR register address in the DMA control register to configure it as the source of the transfer. The data is moved from this address to the memory after each RXNE event.
2. Write the memory address in the DMA control register to configure it as the destination of the transfer. The data is loaded from USART_RDR to this memory area after each RXNE event.
3. Configure the total number of bytes to be transferred to the DMA control register.
4. Configure the channel priority in the DMA control register
5. Configure interrupt generation after half/ full transfer as required by the application.
6. Activate the channel in the DMA control register.

When the number of data transfers programmed in the DMA Controller is reached, the DMA controller generates an interrupt on the DMA channel interrupt vector.

Figure 438. Reception using DMA

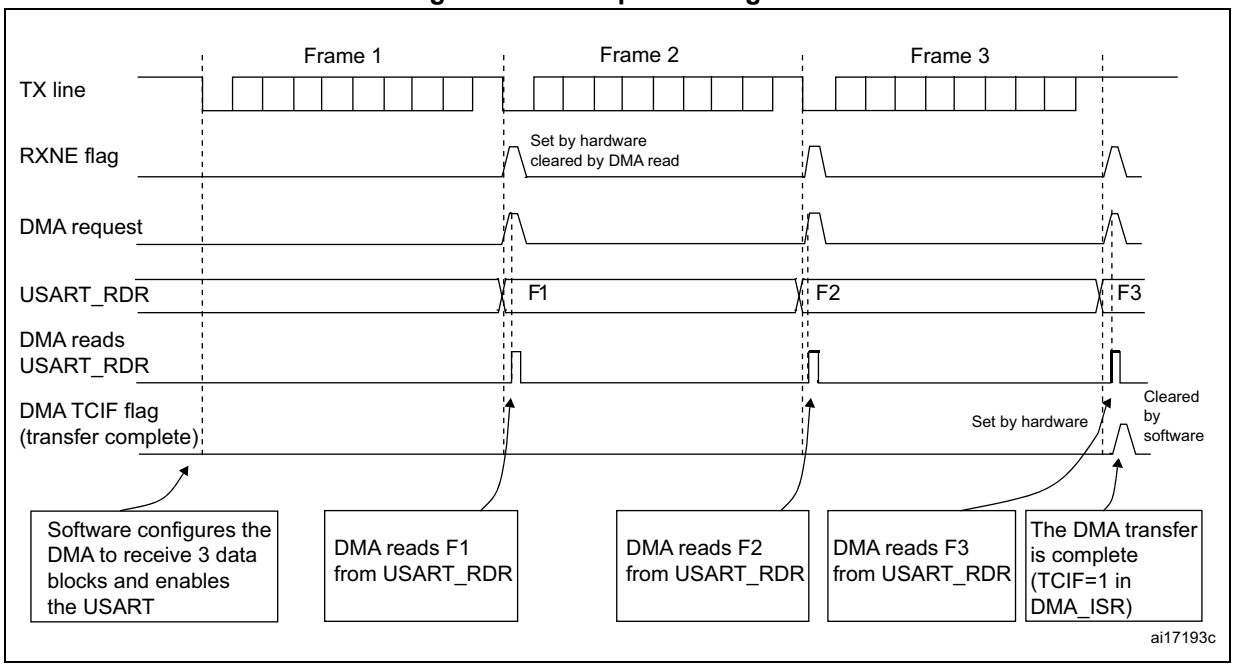

Error flagging and interrupt generation in multibuffer communication

In multibuffer communication if any error occurs during the transaction the error flag is asserted after the current byte. An interrupt is generated if the interrupt enable flag is set. For framing error, overrun error and noise flag which are asserted with RXNE in single byte reception, there is a separate error flag interrupt enable bit (EIE bit in the USART_CR3 register), which, if set, enables an interrupt after the current byte if any of these errors occur.

40.5.16 RS232 hardware flow control and RS485 driver enable using USART

It is possible to control the serial data flow between 2 devices by using the CTS input and the RTS output. The *Figure 439* shows how to connect 2 devices in this mode:

Figure 439. Hardware flow control between 2 USARTs

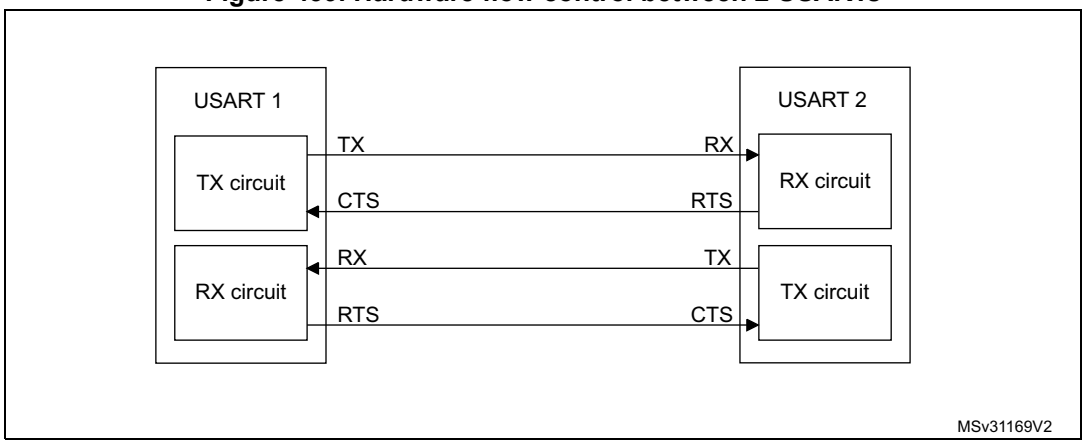

RS232 RTS and CTS flow control can be enabled independently by writing the RTSE and CTSE bits respectively to 1 (in the USART_CR3 register).

RS232 RTS flow control

If the RTS flow control is enabled (RTSE=1), then RTS is asserted (tied low) as long as the USART receiver is ready to receive a new data. When the receive register is full, RTS is de-asserted, indicating that the transmission is expected to stop at the end of the current frame. *Figure 440* shows an example of communication with RTS flow control enabled.

Figure 440. RS232 RTS flow control

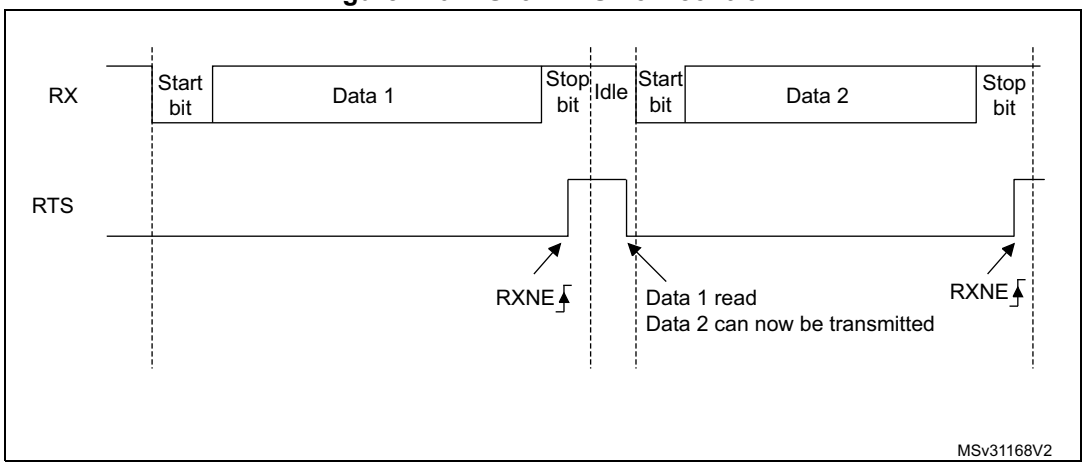

RS232 CTS flow control

If the CTS flow control is enabled (CTSE=1), then the transmitter checks the CTS input before transmitting the next frame. If CTS is asserted (tied low), then the next data is transmitted (assuming that data is to be transmitted, in other words, if TXE=0), else the transmission does not occur. when CTS is de-asserted during a transmission, the current transmission is completed before the transmitter stops.

When CTSE=1, the CTSIF status bit is automatically set by hardware as soon as the CTS input toggles. It indicates when the receiver becomes ready or not ready for communication. An interrupt is generated if the CTSIE bit in the USART_CR3 register is set. *Figure 441* shows an example of communication with CTS flow control enabled.

Figure 441. RS232 CTS flow control

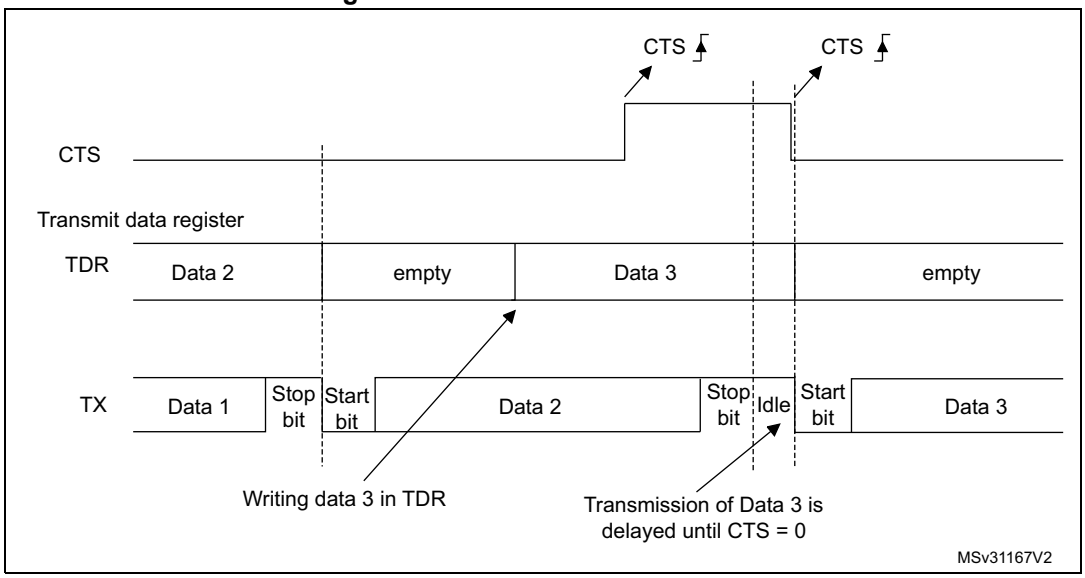

Note: For correct behavior, CTS must be asserted at least 3 USART clock source periods before the end of the current character. In addition it should be noted that the CTSCF flag may not be set for pulses shorter than 2 x PCLK periods.

RS485 Driver Enable

The driver enable feature is enabled by setting bit DEM in the USART_CR3 control register. This allows the user to activate the external transceiver control, through the DE (Driver Enable) signal. The assertion time is the time between the activation of the DE signal and the beginning of the START bit. It is programmed using the DEAT [4:0] bit fields in the USART_CR1 control register. The de-assertion time is the time between the end of the last stop bit, in a transmitted message, and the de-activation of the DE signal. It is programmed using the DEDT [4:0] bit fields in the USART_CR1 control register. The polarity of the DE signal can be configured using the DEP bit in the USART_CR3 control register.

In USART, the DEAT and DEDT are expressed in sample time units (1/8 or 1/16 bit duration, depending on the oversampling rate).

40.5.17 Wakeup from Stop mode using USART

The USART is able to wake up the MCU from Stop mode when the UESM bit is set and the USART clock is set to HSI16 or LSE (refer to Section Reset and clock control (RCC)).

- USART source clock is HSI

  If during stop mode the HSI clock is switched OFF, when a falling edge on the USART receive line is detected, the USART interface requests the HSI clock to be switched ON. The HSI clock is then used for the frame reception.

  – If the wakeup event is verified, the MCU wakes up from low-power mode and data reception goes on normally.

  – If the wakeup event is not verified, the HSI clock is switched OFF again, the MCU is not waken up and stays in low-power mode and the clock request is released.

- USART source clock is LSE

  Same principle as described in case of USART source clock is HSI with the difference that the LSE is ON in stop mode, but the LSE clock is not propagated to USART if the

USART is not requesting it. The LSE clock is not OFF but there is a clock gating to avoid useless consumption.

When the USART clock source is configured to be f_{LSE} or f_{HSI}, it is possible to keep enabled this clock during STOP mode by setting the UCESM bit in USART_CR3 control register.

The MCU wakeup from Stop mode can be done using the standard RXNE interrupt. In this case, the RXNEIE bit must be set before entering Stop mode.

Alternatively, a specific interrupt may be selected through the WUS bit fields.

In order to be able to wake up the MCU from Stop mode, the UESM bit in the USART_CR1 control register must be set prior to entering Stop mode.

When the wakeup event is detected, the WUF flag is set by hardware and a wakeup interrupt is generated if the WUFIE bit is set.

Note: Before entering Stop mode, the user must ensure that the USART is not performing a transfer. BUSY flag cannot ensure that Stop mode is never entered during a running reception.

The WUF flag is set when a wakeup event is detected, independently of whether the MCU is in Stop or in an active mode.

When entering Stop mode just after having initialized and enabled the receiver, the REACK bit must be checked to ensure the USART is actually enabled.

When DMA is used for reception, it must be disabled before entering Stop mode and re-enabled upon exit from Stop mode.

The wakeup from Stop mode feature is not available for all modes. For example it doesn't work in SPI mode because the SPI operates in master mode only.

Using Mute mode with Stop mode

If the USART is put into Mute mode before entering Stop mode:

- Wakeup from Mute mode on idle detection must not be used, because idle detection cannot work in Stop mode.
- If the wakeup from Mute mode on address match is used, then the source of wake-up from Stop mode must also be the address match. If the RXNE flag is set when entering the Stop mode, the interface will remain in mute mode upon address match and wake up from Stop.
- If the USART is configured to wake up the MCU from Stop mode on START bit detection, the WUF flag is set, but the RXNE flag is not set.

Determining the maximum USART baud rate allowing to wakeup correctly from Stop mode when the USART clock source is the HSI clock

The maximum baud rate allowing to wakeup correctly from stop mode depends on:

- the parameter $t_{WUUSART}$ provided in the device datasheet
- the USART receiver tolerance provided in the *Section 40.5.5: Tolerance of the USART receiver to clock deviation*.

Let us take this example: OVER8 = 0, M bits = 10, ONEBIT = 1, BRR [3:0] = 0000.

In these conditions, according to *Table 249: Tolerance of the USART receiver when BRR [3:0] = 0000*, the USART receiver tolerance is 4.86 %.

DTRA + DQUANT + DREC + DTCL + DWU < USART receiver's tolerance

DWU max = $t_{WUUSART}$ / (9 x Tbit Min)

Tbit Min = $t_{WUUSART}$ / (9 x DWU max)

If we consider an ideal case where the parameters DTRA, DQUANT, DREC and DTCL are at 0%, the DWU max is 4.86 %. In reality, we need to consider at least the HSI inaccuracy.

Let us consider the HSI inaccuracy = 1 %, $t_{WUUSART}$ = 1.7 µs (in case of wakeup from Stop mode 0).

DWU max = 4.86 % - 1 % = 3.86 %

Tbit min = 1.7 µs / (9 x 3.86 %) = 4.89 µs

In these conditions, the maximum baud rate allowing to wakeup correctly from Stop mode is 1/4.89 µs = 204 Kbaud.

40.6 USART low-power modes

Table 252. Effect of low-power modes on the USART

Mode	Description
Sleep	No effect. USART interrupt causes the device to exit Sleep mode.
Low-power run	No effect.
Low-power sleep	No effect. USART interrupt causes the device to exit Low-power sleep mode.
Stop 0 / Stop 1	The USART registers content is kept. The USART is able to wake up the MCU from Stop 0 and Stop 1 modes when the UESM bit is set and the USART clock is set to HSI16 or LSE. The MCU wakeup from Stop 0 and Stop 1 modes can be done using either a standard RXNE or a WUF interrupt.
Stop 2	The USART registers content is kept. The USART must either be disabled or put in reset state.
Standby	The USART is powered down and must be reinitialized when the device has exited from Standby or Shutdown mode.
Shutdown	

40.7 USART interrupts

Table 253. USART interrupt requests

Interrupt event	Event flag	Enable Control bit
Transmit data register empty	TXE	TXEIE
CTS interrupt	CTSIF	CTSIE
Transmission Complete	TC	TCIE
Receive data register not empty (data ready to be read)	RXNE	RXNEIE
Overrun error detected	ORE	
Idle line detected	IDLE	IDLEIE

Table 253. USART interrupt requests (continued)

Interrupt event	Event flag	Enable Control bit
Parity error	PE	PEIE
LIN break	LBDF	LBDIE
Noise Flag, Overrun error and Framing Error in multibuffer communication.	NF or ORE or FE	EIE
Character match	CMF	CMIE
Receiver timeout	RTOF	RTOIE
End of Block	EOBF	EOBIE
Wakeup from Stop mode	WUF(1)	WUFIE
Transmission complete before guard time(2)	TCBGT	TCBGTIE

1. The WUF interrupt is active only in Stop mode.
2. Available on STM32L49x/L4Ax devices only.

The USART interrupt events are connected to the same interrupt vector (see *Figure 442*).

- During transmission: Transmission Complete, Transmission complete before guard time, Clear to Send, Transmit data Register empty or Framing error (in Smartcard mode) interrupt.
- During reception: Idle Line detection, Overrun error, Receive data register not empty, Parity error, LIN break detection, Noise Flag, Framing Error, Character match, etc.

These events generate an interrupt if the corresponding Enable Control Bit is set.

Figure 442. USART interrupt mapping diagram

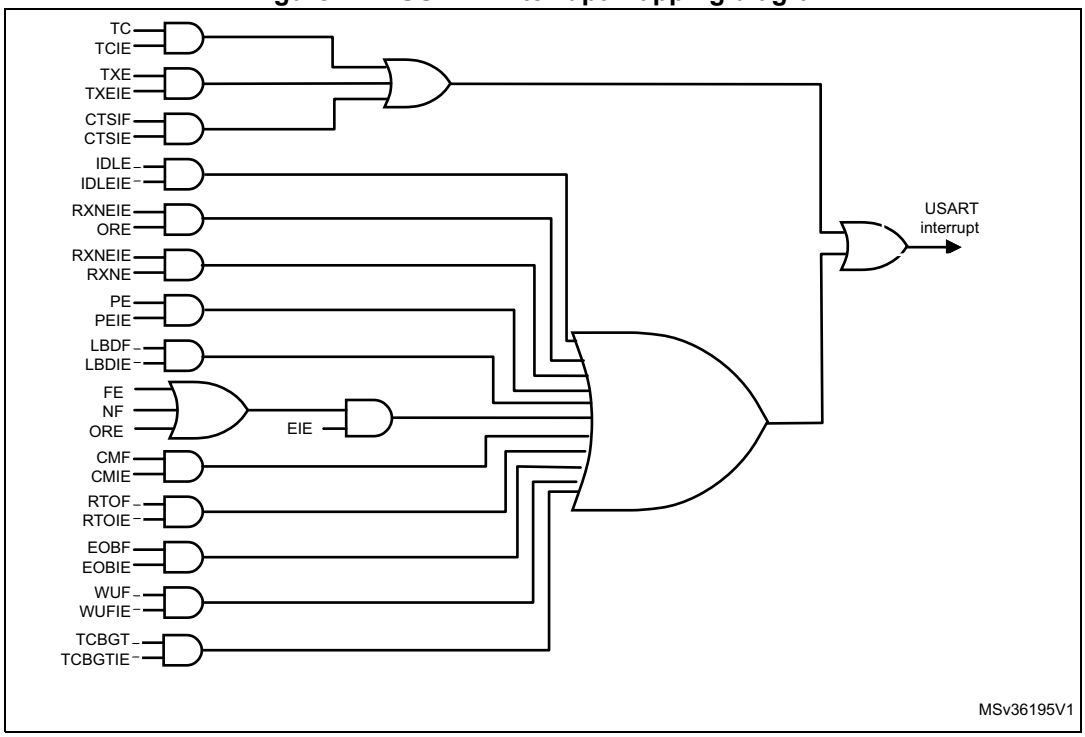

40.8 USART registers

Refer to *Section 1.2 on page 69* for a list of abbreviations used in register descriptions.

The peripheral registers have to be accessed by words (32 bits).

40.8.1 USART control register 1 (USART_CR1)

Address offset: 0x00

Reset value: 0x0000 0000

31	30	29	28	27	26	25	24	23	22	21	20	19	18	17	16
Res.	Res.	Res.	M1	EOBIE	RTOIE	DEAT[4:0]					DEDT[4:0]				
			rw	rw	rw	rw	rw	rw	rw	rw	rw	rw	rw	rw	rw
15	14	13	12	11	10	9	8	7	6	5	4	3	2	1	0
OVER8	CMIE	MME	M0	WAKE	PCE	PS	PEIE	TXEIE	TCIE	RXNEIE	IDLEIE	TE	RE	UESM	UE
rw	rw	rw	rw	rw	rw	rw	rw	rw	rw	rw	rw	rw	rw	rw	rw

Bits 31:29 Reserved, must be kept at reset value.

Bit 28 **M1**: Word length

This bit, with bit 12 (M0), determines the word length. It is set or cleared by software.
M[1:0] = 00: 1 Start bit, 8 data bits, n stop bits
M[1:0] = 01: 1 Start bit, 9 data bits, n stop bits
M[1:0] = 10: 1 Start bit, 7 data bits, n stop bits
This bit can only be written when the USART is disabled (UE=0).

Note: Not all modes are supported In 7-bit data length mode. Refer to Section 40.4: USART implementation for details.

Bit 27 **EOBIE**: End of Block interrupt enable

This bit is set and cleared by software.
0: Interrupt is inhibited
1: A USART interrupt is generated when the EOBF flag is set in the USART_ISR register.

Note: If the USART does not support Smartcard mode, this bit is reserved and must be kept at reset value. Please refer to Section 40.4: USART implementation on page 1342.

Bit 26 **RTOIE**: Receiver timeout interrupt enable

This bit is set and cleared by software.
0: Interrupt is inhibited
1: An USART interrupt is generated when the RTOF bit is set in the USART_ISR register.

Note: If the USART does not support the Receiver timeout feature, this bit is reserved and must be kept at reset value. Section 40.4: USART implementation on page 1342.

Bits 25:21 **DEAT[4:0]**: Driver Enable assertion time

This 5-bit value defines the time between the activation of the DE (Driver Enable) signal and the beginning of the start bit. It is expressed in sample time units (1/8 or 1/16 bit duration, depending on the oversampling rate).
This bit field can only be written when the USART is disabled (UE=0).

Note: If the Driver Enable feature is not supported, this bit is reserved and must be kept at reset value. Please refer to Section 40.4: USART implementation on page 1342.

Bits 20:16 **DEDT[4:0]**: Driver Enable de-assertion time

This 5-bit value defines the time between the end of the last stop bit, in a transmitted message, and the de-activation of the DE (Driver Enable) signal. It is expressed in sample time units (1/8 or 1/16 bit duration, depending on the oversampling rate).

If the USART_TDR register is written during the DEDT time, the new data is transmitted only when the DEDT and DEAT times have both elapsed.

This bit field can only be written when the USART is disabled (UE=0).

Note: If the Driver Enable feature is not supported, this bit is reserved and must be kept at reset value. Please refer to Section 40.4: USART implementation on page 1342.

Bit 15 **OVER8**: Oversampling mode

0: Oversampling by 16

1: Oversampling by 8

This bit can only be written when the USART is disabled (UE=0).

Note: In LIN, IrDA and modes, this bit must be kept at reset value.

Bit 14 **CMIE**: Character match interrupt enable

This bit is set and cleared by software.

0: Interrupt is inhibited

1: A USART interrupt is generated when the CMF bit is set in the USART_ISR register.

Bit 13 **MME**: Mute mode enable

This bit activates the mute mode function of the USART. when set, the USART can switch between the active and mute modes, as defined by the WAKE bit. It is set and cleared by software.

0: Receiver in active mode permanently

1: Receiver can switch between mute mode and active mode.

Bit 12 **M0**: Word length

This bit, with bit 28 (M1), determines the word length. It is set or cleared by software. See Bit 28 (M1) description.

This bit can only be written when the USART is disabled (UE=0).

Bit 11 **WAKE**: Receiver wakeup method

This bit determines the USART wakeup method from Mute mode. It is set or cleared by software.

0: Idle line

1: Address mark

This bit field can only be written when the USART is disabled (UE=0).

Bit 10 **PCE**: Parity control enable

This bit selects the hardware parity control (generation and detection). When the parity control is enabled, the computed parity is inserted at the MSB position (9th bit if M=1; 8th bit if M=0) and parity is checked on the received data. This bit is set and cleared by software. Once it is set, PCE is active after the current byte (in reception and in transmission).

0: Parity control disabled

1: Parity control enabled

This bit field can only be written when the USART is disabled (UE=0).

Bit 9 **PS**: Parity selection

This bit selects the odd or even parity when the parity generation/detection is enabled (PCE bit set). It is set and cleared by software. The parity will be selected after the current byte.

0: Even parity

1: Odd parity

This bit field can only be written when the USART is disabled (UE=0).

Bit 8 **PEIE**: PE interrupt enable

This bit is set and cleared by software.

0: Interrupt is inhibited

1: A USART interrupt is generated whenever PE=1 in the USART_ISR register

Bit 7 **TXEIE**: interrupt enable

This bit is set and cleared by software.

0: Interrupt is inhibited

1: A USART interrupt is generated whenever TXE=1 in the USART_ISR register

Bit 6 **TCIE**: Transmission complete interrupt enable

This bit is set and cleared by software.

0: Interrupt is inhibited

1: A USART interrupt is generated whenever TC=1 in the USART_ISR register

Bit 5 **RXNEIE**: RXNE interrupt enable

This bit is set and cleared by software.

0: Interrupt is inhibited

1: A USART interrupt is generated whenever ORE=1 or RXNE=1 in the USART_ISR register

Bit 4 **IDLEIE**: IDLE interrupt enable

This bit is set and cleared by software.

0: Interrupt is inhibited

1: A USART interrupt is generated whenever IDLE=1 in the USART_ISR register

Bit 3 **TE**: Transmitter enable

This bit enables the transmitter. It is set and cleared by software.

0: Transmitter is disabled

1: Transmitter is enabled

Note: During transmission, a "0" pulse on the TE bit ("0" followed by "1") sends a preamble (idle line) after the current word, except in Smartcard mode. In order to generate an idle character, the TE must not be immediately written to 1. In order to ensure the required duration, the software can poll the TEACK bit in the USART_ISR register.

In Smartcard mode, when TE is set there is a 1 bit-time delay before the transmission starts.

Bit 2 **RE**: Receiver enable

This bit enables the receiver. It is set and cleared by software.

0: Receiver is disabled

1: Receiver is enabled and begins searching for a start bit

Bit 1 **UESM**: USART enable in Stop mode

When this bit is cleared, the USART is not able to wake up the MCU from Stop mode.

When this bit is set, the USART is able to wake up the MCU from Stop mode, provided that the USART clock selection is HSI16 or LSE in the RCC.

This bit is set and cleared by software.

0: USART not able to wake up the MCU from Stop mode.

1: USART able to wake up the MCU from Stop mode. When this function is active, the clock source for the USART must be HSI16 or LSE (see Section Reset and clock control (RCC).

Note: It is recommended to set the UESM bit just before entering Stop mode and clear it on exit from Stop mode.

If the USART does not support the wakeup from Stop feature, this bit is reserved and must be kept at reset value. Please refer to Section 40.4: USART implementation on page 1342.

Bit 0 **UE**: USART enable

When this bit is cleared, the USART prescalers and outputs are stopped immediately, and current operations are discarded. The configuration of the USART is kept, but all the status flags, in the USART_ISR are set to their default values. This bit is set and cleared by software.

0: USART prescaler and outputs disabled, low-power mode

1: USART enabled

Note: In order to go into low-power mode without generating errors on the line, the TE bit must be reset before and the software must wait for the TC bit in the USART_ISR to be set before resetting the UE bit.

The DMA requests are also reset when UE = 0 so the DMA channel must be disabled before resetting the UE bit.

40.8.2 USART control register 2 (USART_CR2)

Address offset: 0x04

Reset value: 0x0000 0000

31	30	29	28	27	26	25	24	23	22	21	20	19	18	17	16
ADD[7:4]				ADD[3:0]				RTOEN	ABRMOD[1:0]		ABREN	MSBFIRST	DATAINV	TXINV	RXINV
rw	rw	rw	rw	rw	rw	rw	rw	rw	rw	rw	rw	rw	rw	rw	rw
15	14	13	12	11	10	9	8	7	6	5	4	3	2	1	0
SWAP	LINEN	STOP[1:0]		CLKEN	CPOL	CPHA	LBCL	Res.	LBDIE	LBDL	ADDM7	Res.	Res.	Res.	Res.
rw	rw	rw	rw	rw	rw	rw	rw		rw	rw	rw				

Bits 31:28 **ADD[7:4]**: Address of the USART node

This bit-field gives the address of the USART node or a character code to be recognized.

This is used in multiprocessor communication during Mute mode or Stop mode, for wakeup with 7-bit address mark detection. The MSB of the character sent by the transmitter should be equal to 1. It may also be used for character detection during normal reception, Mute mode inactive (for example, end of block detection in ModBus protocol). In this case, the whole received character (8-bit) is compared to the ADD[7:0] value and CMF flag is set on match.

This bit field can only be written when reception is disabled (RE = 0) or the USART is disabled (UE=0)

Bits 27:24 **ADD[3:0]**: Address of the USART node

This bit-field gives the address of the USART node or a character code to be recognized.

This is used in multiprocessor communication during Mute mode or Stop mode, for wakeup with address mark detection.

This bit field can only be written when reception is disabled (RE = 0) or the USART is disabled (UE=0)

Bit 23 **RTOEN**: Receiver timeout enable

This bit is set and cleared by software.

0: Receiver timeout feature disabled.

1: Receiver timeout feature enabled.

When this feature is enabled, the RTOF flag in the USART_ISR register is set if the RX line is idle (no reception) for the duration programmed in the RTOR (receiver timeout register).

Note: If the USART does not support the Receiver timeout feature, this bit is reserved and must be kept at reset value. Please refer to Section 40.4: USART implementation on page 1342.

Bits 22:21 **ABRMOD[1:0]**: Auto baud rate mode

These bits are set and cleared by software.

00: Measurement of the start bit is used to detect the baud rate.

01: Falling edge to falling edge measurement. (the received frame must start with a single bit = 1 -> Frame = Start10xxxxxx)

10: 0x7F frame detection.

11: 0x55 frame detection

This bit field can only be written when ABREN = 0 or the USART is disabled (UE=0).

Note: If DATAINV=1 and/or MSBFIRST=1 the patterns must be the same on the line, for example 0xAA for MSBFIRST)

If the USART does not support the auto baud rate feature, this bit is reserved and must be kept at reset value. Please refer to Section 40.4: USART implementation on page 1342.

Bit 20 **ABREN**: Auto baud rate enable

This bit is set and cleared by software.

0: Auto baud rate detection is disabled.

1: Auto baud rate detection is enabled.

Note: If the USART does not support the auto baud rate feature, this bit is reserved and must be kept at reset value. Please refer to Section 40.4: USART implementation on page 1342.

Bit 19 **MSBFIRST**: Most significant bit first

This bit is set and cleared by software.

0: data is transmitted/received with data bit 0 first, following the start bit.

1: data is transmitted/received with the MSB (bit 7/8/9) first, following the start bit.

This bit field can only be written when the USART is disabled (UE=0).

Bit 18 **DATAINV:** Binary data inversion

This bit is set and cleared by software.

0: Logical data from the data register are send/received in positive/direct logic. (1=H, 0=L)

1: Logical data from the data register are send/received in negative/inverse logic. (1=L, 0=H). The parity bit is also inverted.

This bit field can only be written when the USART is disabled (UE=0).

Bit 17 **TXINV:** TX pin active level inversion

This bit is set and cleared by software.

0: TX pin signal works using the standard logic levels (V_{DD} =1/idle, Gnd=0/mark)

1: TX pin signal values are inverted. (V_{DD} =0/mark, Gnd=1/idle).

This allows the use of an external inverter on the TX line.

This bit field can only be written when the USART is disabled (UE=0).

Bit 16 **RXINV:** RX pin active level inversion

This bit is set and cleared by software.

0: RX pin signal works using the standard logic levels (V_{DD} =1/idle, Gnd=0/mark)

1: RX pin signal values are inverted. (V_{DD} =0/mark, Gnd=1/idle).

This allows the use of an external inverter on the RX line.

This bit field can only be written when the USART is disabled (UE=0).

Bit 15 **SWAP:** Swap TX/RX pins

This bit is set and cleared by software.

0: TX/RX pins are used as defined in standard pinout

1: The TX and RX pins functions are swapped. This allows to work in the case of a cross-wired connection to another USART.

This bit field can only be written when the USART is disabled (UE=0).

Bit 14 **LINEN**: LIN mode enable

This bit is set and cleared by software.

0: LIN mode disabled

1: LIN mode enabled

The LIN mode enables the capability to send LIN synchronous breaks (13 low bits) using the SBKRQ bit in the USART_RQR register, and to detect LIN Sync breaks.

This bit field can only be written when the USART is disabled (UE=0).

Note: If the USART does not support LIN mode, this bit is reserved and must be kept at reset value. Please refer to Section 40.4: USART implementation on page 1342.

Bits 13:12 **STOP[1:0]**: STOP bits

These bits are used for programming the stop bits.

00: 1 stop bit

01: 0.5 stop bit

10: 2 stop bits

11: 1.5 stop bits

This bit field can only be written when the USART is disabled (UE=0).

Bit 11 **CLKEN**: Clock enable

This bit allows the user to enable the CK pin.

0: CK pin disabled

1: CK pin enabled

This bit can only be written when the USART is disabled (UE=0).

Note: If neither synchronous mode nor Smartcard mode is supported, this bit is reserved and must be kept at reset value. Please refer to Section 40.4: USART implementation on page 1342.

In order to provide correctly the CK clock to the Smartcard when CK is always available When CLKEN = 1, regardless of the UE bit value, the steps below must be respected:

- UE = 0

- SCEN = 1

- GTPR configuration (If PSC needs to be configured, it is recommended to configure PSC and GT in a single access to USART_ GTPR register).

- CLKEN= 1

- UE = 1

Bit 10 **CPOL**: Clock polarity

This bit allows the user to select the polarity of the clock output on the CK pin in synchronous mode. It works in conjunction with the CPHA bit to produce the desired clock/data relationship

0: Steady low value on CK pin outside transmission window

1: Steady high value on CK pin outside transmission window

This bit can only be written when the USART is disabled (UE=0).

Note: If synchronous mode is not supported, this bit is reserved and must be kept at reset value. Please refer to Section 40.4: USART implementation on page 1342.

Bit 9 **CPHA**: Clock phase

This bit is used to select the phase of the clock output on the CK pin in synchronous mode. It works in conjunction with the CPOL bit to produce the desired clock/data relationship (see *Figure 430* and *Figure 431*)

0: The first clock transition is the first data capture edge

1: The second clock transition is the first data capture edge

This bit can only be written when the USART is disabled (UE=0).

Note: If synchronous mode is not supported, this bit is reserved and must be kept at reset value. Please refer to Section 40.4: USART implementation on page 1342.

Bit 8 **LBCL**: Last bit clock pulse

This bit is used to select whether the clock pulse associated with the last data bit transmitted (MSB) has to be output on the CK pin in synchronous mode.

0: The clock pulse of the last data bit is not output to the CK pin

1: The clock pulse of the last data bit is output to the CK pin

Caution: The last bit is the 7th or 8th or 9th data bit transmitted depending on the 7 or 8 or 9 bit format selected by the M bits in the USART_CR1 register.

This bit can only be written when the USART is disabled (UE=0).

Note: If synchronous mode is not supported, this bit is reserved and must be kept at reset value. Please refer to Section 40.4: USART implementation on page 1342.

Bit 7 Reserved, must be kept at reset value.

Bit 6 **LBDIE**: LIN break detection interrupt enable

Break interrupt mask (break detection using break delimiter).

0: Interrupt is inhibited

1: An interrupt is generated whenever LBDF=1 in the USART_ISR register

Note: If LIN mode is not supported, this bit is reserved and must be kept at reset value. Please refer to Section 40.4: USART implementation on page 1342.

Bit 5 **LBDL**: LIN break detection length

This bit is for selection between 11 bit or 10 bit break detection.

0: 10-bit break detection

1: 11-bit break detection

This bit can only be written when the USART is disabled (UE=0).

Note: If LIN mode is not supported, this bit is reserved and must be kept at reset value. Please refer to Section 40.4: USART implementation on page 1342.

Bit 4 **ADDM7**:7-bit Address Detection/4-bit Address Detection

This bit is for selection between 4-bit address detection or 7-bit address detection.

0: 4-bit address detection

1: 7-bit address detection (in 8-bit data mode)

This bit can only be written when the USART is disabled (UE=0)

Note: In 7-bit and 9-bit data modes, the address detection is done on 6-bit and 8-bit address (ADD[5:0] and ADD[7:0]) respectively.

Bits 3:0 Reserved, must be kept at reset value.

Note: The 3 bits (CPOL, CPHA, LBCL) should not be written while the transmitter is enabled.

40.8.3 USART control register 3 (USART_CR3)

Address offset: 0x08

Reset value: 0x0000 0000

31	30	29	28	27	26	25	24	23	22	21	20	19	18	17	16
Res.	Res.	Res.	Res.	Res.	Res.	Res.	TCBGTIE	UCESM	WUFIE	WUS1	WUS0	SCARCNT2	SCARCNT1	SCARCNT0	Res.
							rw	rw	rw	rw	rw	rw	rw	rw	
15	14	13	12	11	10	9	8	7	6	5	4	3	2	1	0
DEP	DEM	DDRE	OVRDIS	ONEBIT	CTSIE	CTSE	RTSE	DMAT	DMAR	SCEN	NACK	HDSEL	IRLP	IREN	EIE
rw	rw	rw	rw	rw	rw	rw	rw	rw	rw	rw	rw	rw	rw	rw	rw

Bits 31:25 Reserved, must be kept at reset value.

Bit 24 **TCBGTIE**: Transmission complete before guard time interrupt enable

This bit is set and cleared by software.

0: Interrupt is inhibited

1: An USART interrupt is generated whenever TCBGT=1 in the USART_ISR register.

Note: If Smartcard mode is not supported, this bit is reserved and must be kept at reset value (see Section 40.4: USART implementation).

Note: This bit is available on STM32L49x/L4Ax devices only.

Bit 23 **UCESM**: USART Clock Enable in Stop mode.

This bit is set and cleared by software.

0: USART Clock is disabled in STOP mode.

1: USART Clock is enabled in STOP mode.

Bit 22 **WUFIE**: Wakeup from Stop mode interrupt enable

This bit is set and cleared by software.

0: Interrupt is inhibited

1: An USART interrupt is generated whenever WUF=1 in the USART_ISR register

Note: WUFIE must be set before entering in Stop mode.

The WUF interrupt is active only in Stop mode.

If the USART does not support the wakeup from Stop feature, this bit is reserved and must be kept at reset value.

Bits 21:20 **WUS[1:0]**: Wakeup from Stop mode interrupt flag selection

This bit-field specify the event which activates the WUF (wakeup from Stop mode flag).

00: WUF active on address match (as defined by ADD[7:0] and ADDM7)

01:Reserved.

10: WuF active on Start bit detection

11: WUF active on RXNE.

This bit field can only be written when the USART is disabled (UE=0).

Note: If the USART does not support the wakeup from Stop feature, this bit is reserved and must be kept at reset value.

Bits 19:17 **SCARCNT[2:0]**: Smartcard auto-retry count

This bit-field specifies the number of retries in transmit and receive, in Smartcard mode.

In transmission mode, it specifies the number of automatic retransmission retries, before generating a transmission error (FE bit set).

In reception mode, it specifies the number or erroneous reception trials, before generating a reception error (RXNE and PE bits set).

This bit field must be programmed only when the USART is disabled (UE=0).

When the USART is enabled (UE=1), this bit field may only be written to 0x0, in order to stop retransmission.

0x0: retransmission disabled - No automatic retransmission in transmit mode.

0x1 to 0x7: number of automatic retransmission attempts (before signaling error)

Note: If Smartcard mode is not supported, this bit is reserved and must be kept at reset value. Please refer to Section 40.4: USART implementation on page 1342.

Bit 16 Reserved, must be kept at reset value.

Bit 15 **DEP**: Driver enable polarity selection

0: DE signal is active high.

1: DE signal is active low.

This bit can only be written when the USART is disabled (UE=0).

Note: If the Driver Enable feature is not supported, this bit is reserved and must be kept at reset value. Please refer to Section 40.4: USART implementation on page 1342.

Bit 14 **DEM**: Driver enable mode

This bit allows the user to activate the external transceiver control, through the DE signal.

0: DE function is disabled.

1: DE function is enabled. The DE signal is output on the RTS pin.

This bit can only be written when the USART is disabled (UE=0).

Note: If the Driver Enable feature is not supported, this bit is reserved and must be kept at reset value. Section 40.4: USART implementation on page 1342.

Bit 13 **DDRE**: DMA Disable on Reception Error

0: DMA is not disabled in case of reception error. The corresponding error flag is set but RXNE is kept 0 preventing from overrun. As a consequence, the DMA request is not asserted, so the erroneous data is not transferred (no DMA request), but next correct received data will be transferred (used for Smartcard mode).

1: DMA is disabled following a reception error. The corresponding error flag is set, as well as RXNE. The DMA request is masked until the error flag is cleared. This means that the software must first disable the DMA request (DMAR = 0) or clear RXNE before clearing the error flag.

This bit can only be written when the USART is disabled (UE=0).

Note: The reception errors are: parity error, framing error or noise error.

Bit 12 **OVRDIS**: Overrun Disable

This bit is used to disable the receive overrun detection.

0: Overrun Error Flag, ORE, is set when received data is not read before receiving new data.

1: Overrun functionality is disabled. If new data is received while the RXNE flag is still set the ORE flag is not set and the new received data overwrites the previous content of the USART_RDR register.

This bit can only be written when the USART is disabled (UE=0).

Note: This control bit allows checking the communication flow without reading the data.

Bit 11 **ONEBIT**: One sample bit method enable

This bit allows the user to select the sample method. When the one sample bit method is selected the noise detection flag (NF) is disabled.

0: Three sample bit method

1: One sample bit method

This bit can only be written when the USART is disabled (UE=0).

Note: ONEBIT feature applies only to data bits, It does not apply to Start bit.

Bit 10 **CTSIE**: CTS interrupt enable

0: Interrupt is inhibited

1: An interrupt is generated whenever CTSIF=1 in the USART_ISR register

Note: If the hardware flow control feature is not supported, this bit is reserved and must be kept at reset value. Please refer to Section 40.4: USART implementation on page 1342.

Bit 9 **CTSE**: CTS enable

0: CTS hardware flow control disabled

1: CTS mode enabled, data is only transmitted when the CTS input is asserted (tied to 0). If the CTS input is de-asserted while data is being transmitted, then the transmission is completed before stopping. If data is written into the data register while CTS is de-asserted, the transmission is postponed until CTS is asserted.

This bit can only be written when the USART is disabled (UE=0)

Note: If the hardware flow control feature is not supported, this bit is reserved and must be kept at reset value. Please refer to Section 40.4: USART implementation on page 1342.

Bit 8 **RTSE**: RTS enable

0: RTS hardware flow control disabled

1: RTS output enabled, data is only requested when there is space in the receive buffer. The transmission of data is expected to cease after the current character has been transmitted. The RTS output is asserted (pulled to 0) when data can be received.

This bit can only be written when the USART is disabled (UE=0).

Note: If the hardware flow control feature is not supported, this bit is reserved and must be kept at reset value. Please refer to Section 40.4: USART implementation on page 1342.

Bit 7 **DMAT**: DMA enable transmitter

This bit is set/reset by software

1: DMA mode is enabled for transmission

0: DMA mode is disabled for transmission

Bit 6 **DMAR**: DMA enable receiver

This bit is set/reset by software

1: DMA mode is enabled for reception

0: DMA mode is disabled for reception

Bit 5 **SCEN**: Smartcard mode enable

This bit is used for enabling Smartcard mode.

0: Smartcard Mode disabled

1: Smartcard Mode enabled

This bit field can only be written when the USART is disabled (UE=0).

Note: If the USART does not support Smartcard mode, this bit is reserved and must be kept at reset value. Please refer to Section 40.4: USART implementation on page 1342.

Bit 4 **NACK**: Smartcard NACK enable

0: NACK transmission in case of parity error is disabled

1: NACK transmission during parity error is enabled

This bit field can only be written when the USART is disabled (UE=0).

Note: If the USART does not support Smartcard mode, this bit is reserved and must be kept at reset value. Please refer to Section 40.4: USART implementation on page 1342.

Bit 3 **HDSEL**: Half-duplex selection

Selection of Single-wire Half-duplex mode

0: Half duplex mode is not selected

1: Half duplex mode is selected

This bit can only be written when the USART is disabled (UE=0).

Bit 2 **IRLP**: IrDA low-power

This bit is used for selecting between normal and low-power IrDA modes
0: Normal mode
1: Low-power mode
This bit can only be written when the USART is disabled (UE=0).

Note: If IrDA mode is not supported, this bit is reserved and must be kept at reset value. Please refer to Section 40.4: USART implementation on page 1342.

Bit 1 **IREN**: IrDA mode enable

This bit is set and cleared by software.
0: IrDA disabled
1: IrDA enabled
This bit can only be written when the USART is disabled (UE=0).

Note: If IrDA mode is not supported, this bit is reserved and must be kept at reset value. Please refer to Section 40.4: USART implementation on page 1342.

Bit 0 **EIE**: Error interrupt enable

Error Interrupt Enable Bit is required to enable interrupt generation in case of a framing error, overrun error or noise flag (FE=1 or ORE=1 or NF=1 in the USART_ISR register).
0: Interrupt is inhibited
1: An interrupt is generated when FE=1 or ORE=1 or NF=1 in the USART_ISR register.

40.8.4 USART baud rate register (USART_BRR)

This register can only be written when the USART is disabled (UE=0). It may be automatically updated by hardware in auto baud rate detection mode.

Address offset: 0x0C

Reset value: 0x0000 0000

31	30	29	28	27	26	25	24	23	22	21	20	19	18	17	16
Res.	Res.	Res.	Res.	Res.	Res.	Res.	Res.	Res.	Res.	Res.	Res.	Res.	Res.	Res.	Res.
15	14	13	12	11	10	9	8	7	6	5	4	3	2	1	0
BRR[15:0]															
rw	rw	rw	rw	rw	rw	rw	rw	rw	rw	rw	rw	rw	rw	rw	rw

Bits 31:16 Reserved, must be kept at reset value.

Bits 15:4 **BRR[15:4]**

BRR[15:4] = USARTDIV[15:4]

Bits 3:0 **BRR[3:0]**

When OVER8 = 0, BRR[3:0] = USARTDIV[3:0].
When OVER8 = 1:
BRR[2:0] = USARTDIV[3:0] shifted 1 bit to the right.
BRR[3] must be kept cleared.

40.8.5 USART guard time and prescaler register (USART_GTPR)

Address offset: 0x10

Reset value: 0x0000 0000

31	30	29	28	27	26	25	24	23	22	21	20	19	18	17	16
Res.	Res.	Res.	Res.	Res.	Res.	Res.	Res.	Res.	Res.	Res.	Res.	Res.	Res.	Res.	Res.

15	14	13	12	11	10	9	8	7	6	5	4	3	2	1	0
GT[7:0]								PSC[7:0]							
rw	rw	rw	rw	rw	rw	rw	rw	rw	rw	rw	rw	rw	rw	rw	rw

Bits 31:16 Reserved, must be kept at reset value.

Bits 15:8 **GT[7:0]**: Guard time value

This bit-field is used to program the Guard time value in terms of number of baud clock periods.

This is used in Smartcard mode. The Transmission Complete flag is set after this guard time value.

This bit field can only be written when the USART is disabled (UE=0).

Note: If Smartcard mode is not supported, this bit is reserved and must be kept at reset value. Please refer to Section 40.4: USART implementation on page 1342.

Bits 7:0 **PSC[7:0]**: Prescaler value

In IrDA Low-power and normal IrDA mode:

PSC[7:0] = IrDA Normal and Low-Power Baud Rate

Used for programming the prescaler for dividing the USART source clock to achieve the low-power frequency:

The source clock is divided by the value given in the register (8 significant bits):

00000000: Reserved - do not program this value

00000001: divides the source clock by 1

00000010: divides the source clock by 2

...

In Smartcard mode:

PSC[4:0]: Prescaler value

Used for programming the prescaler for dividing the USART source clock to provide the Smartcard clock.

The value given in the register (5 significant bits) is multiplied by 2 to give the division factor of the source clock frequency:

00000: Reserved - do not program this value

00001: divides the source clock by 2

00010: divides the source clock by 4

00011: divides the source clock by 6

...

This bit field can only be written when the USART is disabled (UE=0).

Note: Bits [7:5] must be kept at reset value if Smartcard mode is used.

This bit field is reserved and must be kept at reset value when the Smartcard and IrDA modes are not supported. Please refer to Section 40.4: USART implementation on page 1342.

40.8.6 USART receiver timeout register (USART_RTOR)

Address offset: 0x14

Reset value: 0x0000 0000

31	30	29	28	27	26	25	24	23	22	21	20	19	18	17	16
BLEN[7:0]								RTO[23:16]							
rw	rw	rw	rw	rw	rw	rw	rw	rw	rw	rw	rw	rw	rw	rw	rw
15	14	13	12	11	10	9	8	7	6	5	4	3	2	1	0
RTO[15:0]															
rw	rw	rw	rw	rw	rw	rw	rw	rw	rw	rw	rw	rw	rw	rw	rw

Bits 31:24 **BLEN[7:0]**: Block Length

This bit-field gives the Block length in Smartcard T=1 Reception. Its value equals the number of information characters + the length of the Epilogue Field (1-LEC/2-CRC) - 1.

Examples:

BLEN = 0 -> 0 information characters + LEC

BLEN = 1 -> 0 information characters + CRC

BLEN = 255 -> 254 information characters + CRC (total 256 characters))

In Smartcard mode, the Block length counter is reset when TXE=0.

This bit-field can be used also in other modes. In this case, the Block length counter is reset when RE=0 (receiver disabled) and/or when the EOBCF bit is written to 1.

Note: This value can be programmed after the start of the block reception (using the data from the LEN character in the Prologue Field). It must be programmed only once per received block.

Bits 23:0 **RTO[23:0]**: Receiver timeout value

This bit-field gives the Receiver timeout value in terms of number of bit duration.

In standard mode, the RTOF flag is set if, after the last received character, no new start bit is detected for more than the RTO value.

In Smartcard mode, this value is used to implement the CWT and BWT. See Smartcard section for more details.

In this case, the timeout measurement is done starting from the Start Bit of the last received character.

Note: This value must only be programmed once per received character.

Note: RTOR can be written on the fly. If the new value is lower than or equal to the counter, the RTOF flag is set.

This register is reserved and forced by hardware to "0x00000000" when the Receiver timeout feature is not supported. Please refer to *Section 40.4: USART implementation on page 1342.*

40.8.7 USART request register (USART_RQR)

Address offset: 0x18

Reset value: 0x0000 0000

31	30	29	28	27	26	25	24	23	22	21	20	19	18	17	16
Res.	Res.	Res.	Res.	Res.	Res.	Res.	Res.	Res.	Res.	Res.	Res.	Res.	Res.	Res.	Res.

15	14	13	12	11	10	9	8	7	6	5	4	3	2	1	0
Res.	Res.	Res.	Res.	Res.	Res.	Res.	Res.	Res.	Res.	Res.	TXFRQ	RXFRQ	MMRQ	SBKRQ	ABRRQ
											w	w	w	w	w

Bits 31:5 Reserved, must be kept at reset value.

Bit 4 **TXFRQ**: Transmit data flush request

Writing 1 to this bit sets the TXE flag.

This allows to discard the transmit data. This bit must be used only in Smartcard mode, when data has not been sent due to errors (NACK) and the FE flag is active in the USART_ISR register.

If the USART does not support Smartcard mode, this bit is reserved and must be kept at reset value. Please refer to *Section 40.4: USART implementation on page 1342*.

Bit 3 **RXFRQ**: Receive data flush request

Writing 1 to this bit clears the RXNE flag.

This allows to discard the received data without reading it, and avoid an overrun condition.

Bit 2 **MMRQ**: Mute mode request

Writing 1 to this bit puts the USART in mute mode and sets the RWU flag.

Bit 1 **SBKRQ**: Send break request

Writing 1 to this bit sets the SBKF flag and request to send a BREAK on the line, as soon as the transmit machine is available.

Note: In the case the application needs to send the break character following all previously inserted data, including the ones not yet transmitted, the software should wait for the TXE flag assertion before setting the SBKRQ bit.

Bit 0 **ABRRQ**: Auto baud rate request

Writing 1 to this bit resets the ABRF flag in the USART_ISR and request an automatic baud rate measurement on the next received data frame.

Note: If the USART does not support the auto baud rate feature, this bit is reserved and must be kept at reset value. Please refer to Section 40.4: USART implementation on page 1342.

40.8.8 USART interrupt and status register (USART_ISR)

Address offset: 0x1C

Reset value: 0x0200 00C0

31	30	29	28	27	26	25	24	23	22	21	20	19	18	17	16
Res.	Res.	Res.	Res.	Res.	Res.	TCBGT	Res.	Res.	REACK	TEACK	WUF	RWU	SBKF	CMF	BUSY
						r			r	r	r	r	r	r	r

15	14	13	12	11	10	9	8	7	6	5	4	3	2	1	0
ABRF	ABRE	Res.	EOBF	RTOF	CTS	CTSIF	LBDF	TXE	TC	RXNE	IDLE	ORE	NF	FE	PE
r	r		r	r	r	r	r	r	r	r	r	r	r	r	r

Bits 31:26 Reserved, must be kept at reset value.

Bit 25 **TCBGT**: Transmission complete before guard time completion.

This bit is used in Smartcard mode. It is set by hardware if the transmission of a frame containing data has completed successfully (no NACK received from the card) and before the guard time has elapsed (contrary to the TC flag which is set when the guard time has elapsed).

An interrupt is generated if TCBGTIE=1 in USART_CR3 register. It is cleared by software, by writing 1 to TCBGTCF in USART_ICR or by writing to the USART_TDR register.

0: Transmission not complete or transmission completed with error (i.e. NACK received from the card)

1: Transmission complete (before Guard time has elapsed and no NACK received from the smartcard).

Note: If the USART does not support the Smartcard mode, this bit is reserved and must be kept at reset value. If the USART supports the Smartcard mode and the Smartcard mode is enabled, the TCBGT reset value is 1.

Note: This bit is available on STM32L49x/L4Ax devices only

Bits 24:23 Reserved, must be kept at reset value.

Bit 22 **REACK**: Receive enable acknowledge flag

This bit is set/reset by hardware, when the Receive Enable value is taken into account by the USART.

When the wakeup from Stop mode is supported, the REACK flag can be used to verify that the USART is ready for reception before entering Stop mode.

Bit 21 **TEACK**: Transmit enable acknowledge flag

This bit is set/reset by hardware, when the Transmit Enable value is taken into account by the USART.

It can be used when an idle frame request is generated by writing TE=0, followed by TE=1 in the USART_CR1 register, in order to respect the TE=0 minimum period.

Bit 20 **WUF**: Wakeup from Stop mode flag

This bit is set by hardware, when a wakeup event is detected. The event is defined by the WUS bit field. It is cleared by software, writing a 1 to the WUCF in the USART_ICR register.

An interrupt is generated if WUFIE=1 in the USART_CR3 register.

Note: When UESM is cleared, WUF flag is also cleared.

The WUF interrupt is active only in Stop mode.

If the USART does not support the wakeup from Stop feature, this bit is reserved and kept at reset value.

Bit 19 **RWU**: *Receiver wakeup from Mute mode*

This bit indicates if the USART is in mute mode. It is cleared/set by hardware when a wakeup/mute sequence is recognized. The mute mode control sequence (address or IDLE) is selected by the WAKE bit in the USART_CR1 register.

When wakeup on IDLE mode is selected, this bit can only be set by software, writing 1 to the MMRQ bit in the USART_RQR register.

0: Receiver in active mode

1: Receiver in mute mode

Bit 18 **SBKF**: Send break flag

This bit indicates that a send break character was requested. It is set by software, by writing 1 to the SBKRQ bit in the USART_RQR register. It is automatically reset by hardware during the stop bit of break transmission.

0: No break character is transmitted

1: Break character will be transmitted

Bit 17 **CMF**: Character match flag

This bit is set by hardware, when the character defined by ADD[7:0] is received. It is cleared by software, writing 1 to the CMCF in the USART_ICR register.

An interrupt is generated if CMIE=1in the USART_CR1 register.

0: No Character match detected

1: Character Match detected

Bit 16 **BUSY**: Busy flag

This bit is set and reset by hardware. It is active when a communication is ongoing on the RX line (successful start bit detected). It is reset at the end of the reception (successful or not).

0: USART is idle (no reception)

1: Reception on going

Bit 15 **ABRF:** Auto baud rate flag

This bit is set by hardware when the automatic baud rate has been set (RXNE will also be set, generating an interrupt if RXNEIE = 1) or when the auto baud rate operation was completed without success (ABRE=1) (ABRE, RXNE and FE are also set in this case)

It is cleared by software, in order to request a new auto baud rate detection, by writing 1 to the ABRRQ in the USART_RQR register.

Note: If the USART does not support the auto baud rate feature, this bit is reserved and kept at reset value.

Bit 14 **ABRE**: Auto baud rate error

This bit is set by hardware if the baud rate measurement failed (baud rate out of range or character comparison failed)

It is cleared by software, by writing 1 to the ABRRQ bit in the USART_CR3 register.

Note: If the USART does not support the auto baud rate feature, this bit is reserved and kept at reset value.

Bit 13 Reserved, must be kept at reset value.

Bit 12 **EOBF**: End of block flag

This bit is set by hardware when a complete block has been received (for example T=1 Smartcard mode). The detection is done when the number of received bytes (from the start of the block, including the prologue) is equal or greater than BLEN + 4.

An interrupt is generated if the EOBIE=1 in the USART_CR2 register.

It is cleared by software, writing 1 to the EOBCF in the USART_ICR register.

0: End of Block not reached

1: End of Block (number of characters) reached

Note: If Smartcard mode is not supported, this bit is reserved and kept at reset value. Please refer to Section 40.4: USART implementation on page 1342.

Bit 11 **RTOF**: Receiver timeout

This bit is set by hardware when the timeout value, programmed in the RTOR register has lapsed, without any communication. It is cleared by software, writing 1 to the RTOCF bit in the USART_ICR register.

An interrupt is generated if RTOIE=1 in the USART_CR1 register.

In Smartcard mode, the timeout corresponds to the CWT or BWT timings.

0: Timeout value not reached

1: Timeout value reached without any data reception

Note: If a time equal to the value programmed in RTOR register separates 2 characters, RTOF is not set. If this time exceeds this value + 2 sample times (2/16 or 2/8, depending on the oversampling method), RTOF flag is set.

The counter counts even if RE = 0 but RTOF is set only when RE = 1. If the timeout has already elapsed when RE is set, then RTOF will be set.

If the USART does not support the Receiver timeout feature, this bit is reserved and kept at reset value.

Bit 10 **CTS**: CTS flag

This bit is set/reset by hardware. It is an inverted copy of the status of the CTS input pin.

0: CTS line set

1: CTS line reset

Note: If the hardware flow control feature is not supported, this bit is reserved and kept at reset value.

Bit 9 **CTSIF**: CTS interrupt flag

This bit is set by hardware when the CTS input toggles, if the CTSE bit is set. It is cleared by software, by writing 1 to the CTSCF bit in the USART_ICR register.

An interrupt is generated if CTSIE=1 in the USART_CR3 register.

0: No change occurred on the CTS status line

1: A change occurred on the CTS status line

Note: If the hardware flow control feature is not supported, this bit is reserved and kept at reset value.

Bit 8 **LBDF**: LIN break detection flag

This bit is set by hardware when the LIN break is detected. It is cleared by software, by writing 1 to the LBDCF in the USART_ICR.

An interrupt is generated if LBDIE = 1 in the USART_CR2 register.

0: LIN Break not detected

1: LIN break detected

Note: If the USART does not support LIN mode, this bit is reserved and kept at reset value. Please refer to Section 40.4: USART implementation on page 1342.

Bit 7 **TXE**: Transmit data register empty

This bit is set by hardware when the content of the USART_TDR register has been transferred into the shift register. It is cleared by a write to the USART_TDR register.

The TXE flag can also be cleared by writing 1 to the TXFRQ in the USART_RQR register, in order to discard the data (only in Smartcard T=0 mode, in case of transmission failure).

An interrupt is generated if the TXEIE bit =1 in the USART_CR1 register.

0: data is not transferred to the shift register

1: data is transferred to the shift register)

Note: This bit is used during single buffer transmission.

Bit 6 **TC**: Transmission complete

This bit is set by hardware if the transmission of a frame containing data is complete and if TXE is set. An interrupt is generated if TCIE=1 in the USART_CR1 register. It is cleared by software, writing 1 to the TCCF in the USART_ICR register or by a write to the USART_TDR register.

An interrupt is generated if TCIE=1 in the USART_CR1 register.

0: Transmission is not complete

1: Transmission is complete

Note: If TE bit is reset and no transmission is on going, the TC bit will be set immediately.

Bit 5 **RXNE**: Read data register not empty

This bit is set by hardware when the content of the RDR shift register has been transferred to the USART_RDR register. It is cleared by a read to the USART_RDR register. The RXNE flag can also be cleared by writing 1 to the RXFRQ in the USART_RQR register.

An interrupt is generated if RXNEIE=1 in the USART_CR1 register.

0: data is not received

1: Received data is ready to be read.

Bit 4 **IDLE**: Idle line detected

This bit is set by hardware when an Idle Line is detected. An interrupt is generated if IDLEIE=1 in the USART_CR1 register. It is cleared by software, writing 1 to the IDLECF in the USART_ICR register.

0: No Idle line is detected

1: Idle line is detected

Note: The IDLE bit will not be set again until the RXNE bit has been set (i.e. a new idle line occurs).

If mute mode is enabled (MME=1), IDLE is set if the USART is not mute (RWU=0), whatever the mute mode selected by the WAKE bit. If RWU=1, IDLE is not set.

Bit 3 **ORE**: Overrun error

This bit is set by hardware when the data currently being received in the shift register is ready to be transferred into the RDR register while RXNE=1. It is cleared by a software, writing 1 to the ORECF, in the USART_ICR register.

An interrupt is generated if RXNEIE=1 or EIE = 1 in the USART_CR1 register.

0: No overrun error

1: Overrun error is detected

Note: When this bit is set, the RDR register content is not lost but the shift register is overwritten. An interrupt is generated if the ORE flag is set during multibuffer communication if the EIE bit is set.

This bit is permanently forced to 0 (no overrun detection) when the OVRDIS bit is set in the USART_CR3 register.

Bit 2 **NF**: START bit Noise detection flag

This bit is set by hardware when noise is detected on a received frame. It is cleared by software, writing 1 to the NFCF bit in the USART_ICR register.

0: No noise is detected

1: Noise is detected

Note: This bit does not generate an interrupt as it appears at the same time as the RXNE bit which itself generates an interrupt. An interrupt is generated when the NF flag is set during multibuffer communication if the EIE bit is set.

Note: When the line is noise-free, the NF flag can be disabled by programming the ONEBIT bit to 1 to increase the USART tolerance to deviations (Refer to Section 40.5.5: Tolerance of the USART receiver to clock deviation on page 1358).

Bit 1 **FE**: Framing error

This bit is set by hardware when a de-synchronization, excessive noise or a break character is detected. It is cleared by software, writing 1 to the FECF bit in the USART_ICR register.

In Smartcard mode, in transmission, this bit is set when the maximum number of transmit attempts is reached without success (the card NACKs the data frame).

An interrupt is generated if EIE = 1 in the USART_CR1 register.

0: No Framing error is detected

1: Framing error or break character is detected

Bit 0 **PE**: Parity error

This bit is set by hardware when a parity error occurs in receiver mode. It is cleared by software, writing 1 to the PECF in the USART_ICR register.

An interrupt is generated if PEIE = 1 in the USART_CR1 register.

0: No parity error

1: Parity error

40.8.9 USART interrupt flag clear register (USART_ICR)

Address offset: 0x20

Reset value: 0x0000 0000

31	30	29	28	27	26	25	24	23	22	21	20	19	18	17	16
Res.	Res.	Res.	Res.	Res.	Res.	Res.	Res.	Res.	Res.	Res.	WUCF	Res.	Res.	CMCF	Res.
											rc_w1			rc_w1	

15	14	13	12	11	10	9	8	7	6	5	4	3	2	1	0
Res.	Res.	Res.	EOBCF	RTOCF	Res.	CTSCF	LBDCF	TCBGTCF	TCCF	Res.	IDLECF	ORECF	NCF	FECF	PECF
			rc_w1	rc_w1		rc_w1	rc_w1	rc_w1	rc_w1		rc_w1	rc_w1	rc_w1	rc_w1	rc_w1

Bits 31:21 Reserved, must be kept at reset value.

Bit 20 **WUCF**: Wakeup from Stop mode clear flag

Writing 1 to this bit clears the WUF flag in the USART_ISR register.

Note: If the USART does not support the wakeup from Stop feature, this bit is reserved and must be kept at reset value.

Bits 19:18 Reserved, must be kept at reset value.

Bit 17 **CMCF**: Character match clear flag

Writing 1 to this bit clears the CMF flag in the USART_ISR register.

Bits 16:13 Reserved, must be kept at reset value.

Bit 12 **EOBCF**: End of block clear flag

Writing 1 to this bit clears the EOBF flag in the USART_ISR register.

Note: If the USART does not support Smartcard mode, this bit is reserved and must be kept at reset value. Please refer to Section 40.4: USART implementation on page 1342.

Bit 11 **RTOCF**: Receiver timeout clear flag

Writing 1 to this bit clears the RTOF flag in the USART_ISR register.

Note: If the USART does not support the Receiver timeout feature, this bit is reserved and must be kept at reset value. Please refer to Section 40.4: USART implementation on page 1342.

Bit 10 Reserved, must be kept at reset value.

Bit 9 **CTSCF**: CTS clear flag

Writing 1 to this bit clears the CTSIF flag in the USART_ISR register.

Note: If the hardware flow control feature is not supported, this bit is reserved and must be kept at reset value. Please refer to Section 40.4: USART implementation on page 1342.

Bit 8 **LBDCF**: LIN break detection clear flag

Writing 1 to this bit clears the LBDF flag in the USART_ISR register.

Note: If LIN mode is not supported, this bit is reserved and must be kept at reset value. Please refer to Section 40.4: USART implementation on page 1342.

Bit 7 **TCBGTCF**: Transmission completed before guard time clear flag

Writing 1 to this bit clears the TCBGT flag in the USART_ISR register.

Note: If the USART does not support SmartCard mode, this bit is reserved and forced by hardware to 0. Please refer to Section 40.4: USART implementation on page 1342).

Note: This bit is available on STM32L49x/L4Ax devices only

Bit 6 **TCCF**: Transmission complete clear flag

Writing 1 to this bit clears the TC flag in the USART_ISR register.

Bit 5 Reserved, must be kept at reset value.

Bit 4 **IDLECF**: Idle line detected clear flag

Writing 1 to this bit clears the IDLE flag in the USART_ISR register.

Bit 3 **ORECF**: Overrun error clear flag

Writing 1 to this bit clears the ORE flag in the USART_ISR register.

Bit 2 **NCF**: Noise detected clear flag

Writing 1 to this bit clears the NF flag in the USART_ISR register.

Bit 1 **FECF**: Framing error clear flag

Writing 1 to this bit clears the FE flag in the USART_ISR register.

Bit 0 **PECF**: Parity error clear flag

Writing 1 to this bit clears the PE flag in the USART_ISR register.

40.8.10 USART receive data register (USART_RDR)

Address offset: 0x24

Reset value: 0x0000 0000

31	30	29	28	27	26	25	24	23	22	21	20	19	18	17	16
Res.	Res.	Res.	Res.	Res.	Res.	Res.	Res.	Res.	Res.	Res.	Res.	Res.	Res.	Res.	Res.

15	14	13	12	11	10	9	8	7	6	5	4	3	2	1	0
Res.	Res.	Res.	Res.	Res.	Res.	Res.	RDR[8:0]								
							r	r	r	r	r	r	r	r	r

Bits 31:9 Reserved, must be kept at reset value.

Bits 8:0 **RDR[8:0]**: Receive data value

Contains the received data character.

The RDR register provides the parallel interface between the input shift register and the internal bus (see *Figure 418*).

When receiving with the parity enabled, the value read in the MSB bit is the received parity bit.

40.8.11 USART transmit data register (USART_TDR)

Address offset: 0x28

Reset value: 0x0000 0000

31	30	29	28	27	26	25	24	23	22	21	20	19	18	17	16
Res.	Res.	Res.	Res.	Res.	Res.	Res.	Res.	Res.	Res.	Res.	Res.	Res.	Res.	Res.	Res.

15	14	13	12	11	10	9	8	7	6	5	4	3	2	1	0
Res.	Res.	Res.	Res.	Res.	Res.	Res.	TDR[8:0]								
							rw	rw	rw	rw	rw	rw	rw	rw	rw

Bits 31:9 Reserved, must be kept at reset value.

Bits 8:0 **TDR[8:0]**: Transmit data value

Contains the data character to be transmitted.

The TDR register provides the parallel interface between the internal bus and the output shift register (see *Figure 418*).

When transmitting with the parity enabled (PCE bit set to 1 in the USART_CR1 register), the value written in the MSB (bit 7 or bit 8 depending on the data length) has no effect because it is replaced by the parity.

Note: This register must be written only when TXE=1.

40.8.12 USART register map

The table below gives the USART register map and reset values.

Table 254. USART register map and reset values

Offset	Register	31	30	29	28	27	26	25	24	23	22	21	20	19	18	17	16	15	14	13	12	11	10	9	8	7	6	5	4	3	2	1	0
0x00	**USART_CR1**	Res.	Res.	Res.	M1	EOBIE	RTOIE	DEAT4	DEAT3	DEAT2	DEAT1	DEAT0	DEDT4	DEDT3	DEDT2	DEDT1	DEDT0	OVER8	CMIE	MME	M0	WAKE	PCE	PS	PEIE	TXEIE	TCIE	RXNEIE	IDLEIE	TE	RE	UESM	UE
	Reset value				0	0	0	0	0	0	0	0	0	0	0	0	0	0	0	0	0	0	0	0	0	0	0	0	0	0	0	0	0
0x04	**USART_CR2**	ADD[7:4]				ADD[3:0]				RTOEN	ABRMOD1	ABRMOD0	ABREN	MSBFIRST	DATAINV	TXINV	RXINV	SWAP	LINEN	STOP [1:0]		CLKEN	CPOL	CPHA	LBCL	Res.	LBDIE	LBDL	ADDM7	Res.	Res.	Res.	Res.
	Reset value	0	0	0	0	0	0	0	0	0	0	0	0	0	0	0	0	0	0	0	0	0	0	0	0		0	0	0				
0x08	**USART_CR3**	Res.	Res.	Res.	Res.	Res.	Res.	Res.	TCBGTIE	UCESM	WUFIE	WUS		SCARCNT2:0]			Res.	DEP	DEM	DDRE	OVRDIS	ONEBIT	CTSIE	CTSE	RTSE	DMAT	DMAR	SCEN	NACK	HDSEL	IRLP	IREN	EIE
	Reset value								0	0	0	0	0	0	0	0		0	0	0	0	0	0	0	0	0	0	0	0	0	0	0	0
0x0C	**USART_BRR**	Res.	Res.	Res.	Res.	Res.	Res.	Res.	Res.	Res.	Res.	Res.	Res.	Res.	Res.	Res.	Res.	BRR[15:0]															
	Reset value																	0	0	0	0	0	0	0	0	0	0	0	0	0	0	0	0
0x10	**USART_GTPR**	Res.	Res.	Res.	Res.	Res.	Res.	Res.	Res.	Res.	Res.	Res.	Res.	Res.	Res.	Res.	Res.	GT[7:0]								PSC[7:0]							
	Reset value																	0	0	0	0	0	0	0	0	0	0	0	0	0	0	0	0
0x14	**USART_RTOR**	BLEN[7:0]								RTO[23:0]																							
	Reset value	0	0	0	0	0	0	0	0	0	0	0	0	0	0	0	0	0	0	0	0	0	0	0	0	0	0	0	0	0	0	0	0
0x18	**USART_RQR**	Res.	Res.	Res.	Res.	Res.	Res.	Res.	Res.	Res.	Res.	Res.	Res.	Res.	Res.	Res.	Res.	Res.	Res.	Res.	Res.	Res.	Res.	Res.	Res.	Res.	Res.	Res.	TXFRQ	RXFRQ	MMRQ	SBKRQ	ABRRQ
	Reset value																												0	0	0	0	0
0x1C	**USART_ISR**	Res.	Res.	Res.	Res.	Res.	Res.	TCBGT	Res.	Res.	REACK	TEACK	WUF	RWU	SBKF	CMF	BUSY	ABRF	ABRE	Res.	EOBF	RTOF	CTS	CTSIF	LBDF	TXE	TC	RXNE	IDLE	ORE	NF	FE	PE
	Reset value							1			0	0	0	0	0	0	0	0	0		0	0	0	0	0	1	1	0	0	0	0	0	0
0x20	**USART_ICR**	Res.	Res.	Res.	Res.	Res.	Res.	Res.	Res.	Res.	Res.	Res.	WUCF	Res.	Res.	CMCF	Res.	Res.	Res.	Res.	EOBCF	RTOCF	Res.	CTSCF	LBDCF	TCBGTCF	TCCF	Res.	IDLECF	ORECF	NCF	FECF	PECF
	Reset value												0			0					0	0		0	0	0	0		0	0	0	0	0
0x24	**USART_RDR**	Res.	Res.	Res.	Res.	Res.	Res.	Res.	Res.	Res.	Res.	Res.	Res.	Res.	Res.	Res.	Res.	Res.	Res.	Res.	Res.	Res.	Res.	Res.	RDR[8:0]								
	Reset value																								X	X	X	X	X	X	X	X	X

Table 254. USART register map and reset values (continued)

Offset	Register	31	30	29	28	27	26	25	24	23	22	21	20	19	18	17	16	15	14	13	12	11	10	9	8	7	6	5	4	3	2	1	0
0x28	**USART_TDR**	Res.	Res.	Res.	Res.	Res.	Res.	Res.	Res.	Res.	Res.	Res.	Res.	Res.	Res.	Res.	Res.	Res.	Res.	Res.	Res.	Res.	Res.	Res.	TDR[8:0]								
	Reset value																								X	X	X	X	X	X	X	X	X

Refer to *Section 2.2 on page 75* for the register boundary addresses.

41 Low-power universal asynchronous receiver transmitter (LPUART)

41.1 Introduction

The low-power universal asynchronous receiver transmitted (LPUART) is an UART which allows Full-duplex UART communications with a limited power consumption. Only 32.768 kHz LSE clock is required to allow UART communications up to 9600 baud/s. Higher baud rates can be reached when the LPUART is clocked by clock sources different from the LSE clock.

Even when the microcontroller is in Stop mode, the LPUART can wait for an incoming UART frame while having an extremely low energy consumption. The LPUART includes all necessary hardware support to make asynchronous serial communications possible with minimum power consumption.

It supports Half-duplex Single-wire communications and Modem operations (CTS/RTS).

It also supports multiprocessor communications.

DMA (direct memory access) can be used for data transmission/reception.

41.2 LPUART main features

- Full-duplex asynchronous communications
- NRZ standard format (mark/space)
- Programmable baud rate from 300 baud/s to 9600 baud/s using a 32.768 kHz clock source. Higher baud rates can be achieved by using a higher frequency clock source
- Dual clock domain allowing
  - UART functionality and wakeup from Stop mode
  - Convenient baud rate programming independent from the PCLK reprogramming
- Programmable data word length (7 or 8 or 9 bits)
- Programmable data order with MSB-first or LSB-first shifting
- Configurable stop bits (1 or 2 stop bits)
- Single-wire Half-duplex communications
- Continuous communications using DMA
- Received/transmitted bytes are buffered in reserved SRAM using centralized DMA.
- Separate enable bits for transmitter and receiver
- Separate signal polarity control for transmission and reception
- Swappable Tx/Rx pin configuration
- Hardware flow control for modem and RS-485 transceiver
- Transfer detection flags:
  - Receive buffer full
  - Transmit buffer empty
  - Busy and end of transmission flags
- Parity control:
  - Transmits parity bit
  - Checks parity of received data byte
- Four error detection flags:
  - Overrun error
  - Noise detection
  - Frame error
  - Parity error
- Fourteen interrupt sources with flags
- Multiprocessor communications

  The LPUART enters mute mode if the address does not match.
- Wakeup from mute mode (by idle line detection or address mark detection)

41.3 LPUART implementation

The STM32L47x/L48x/L49x/L4Ax devices embed one LPUART. Refer to *Section 40.4: USART implementation* for LPUART supported features.

41.4 LPUART functional description

Any LPUART bidirectional communication requires a minimum of two pins: Receive data In (RX) and Transmit data Out (TX):

- **RX**: Receive data Input.

  This is the serial data input.
- **TX:** Transmit data Output.

  When the transmitter is disabled, the output pin returns to its I/O port configuration. When the transmitter is enabled and nothing is to be transmitted, the TX pin is at high level. In Single-wire mode, this I/O is used to transmit and receive the data.

Through these pins, serial data is transmitted and received in normal LPUART mode as frames comprising:

- An Idle Line prior to transmission or reception
- A start bit
- A data word (7 or 8 or 9 bits) least significant bit first
- 1, 2 stop bits indicating that the frame is complete
- The LPUART interface uses a baud rate generator
- A status register (LPUART_ISR)
- Receive and transmit data registers (LPUART_RDR, LPUART_TDR)
- A baud rate register (LPUART_BRR)

Refer to *Section 41.7: LPUART registers* for the definitions of each bit.

The following pins are required in RS232 Hardware flow control mode:

- **CTS:** Clear To Send blocks the data transmission at the end of the current transfer when high
- **RTS:** Request to send indicates that the LPUART is ready to receive data (when low).

The following pin is required in RS485 Hardware control mode:

- **DE**: Driver Enable activates the transmission mode of the external transceiver.

Note: DE and RTS share the same pin.

Figure 443. LPUART block diagram

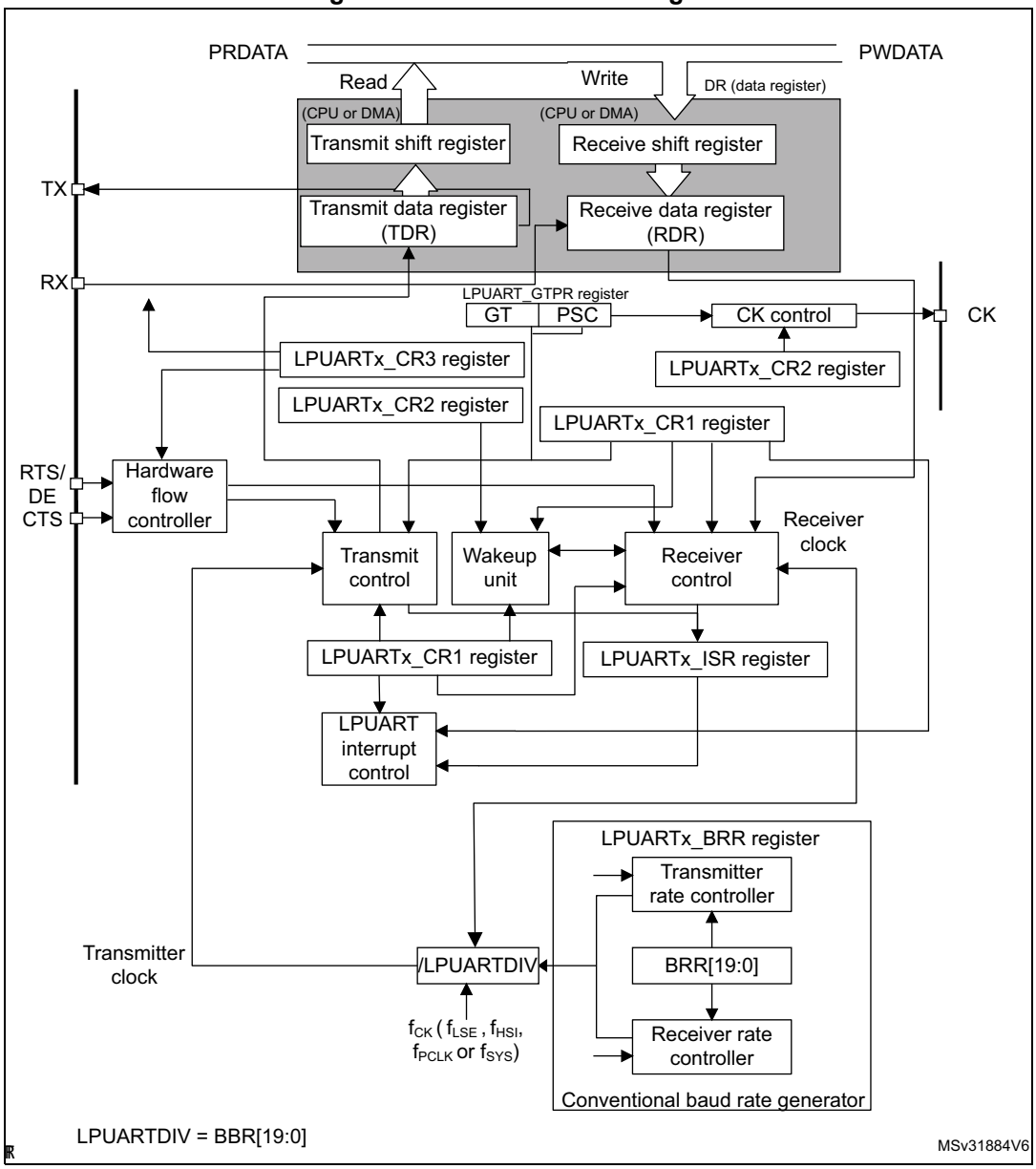

41.4.1 LPUART character description

Word length may be selected as being either 7 or 8 or 9 bits by programming the M[1:0] bits in the LPUART_CR1 register (see *Figure 444*).

- 7-bit character length: M[1:0] = 10
- 8-bit character length: M[1:0] = 00
- 9-bit character length: M[1:0] = 01

By default, the signal (TX or RX) is in low state during the start bit. It is in high state during the stop bit.

These values can be inverted, separately for each signal, through polarity configuration control.

An ***Idle character*** is interpreted as an entire frame of “1”s. (The number of “1”s includes the number of stop bits).

A ***Break character*** is interpreted on receiving “0”s for a frame period. At the end of the break frame, the transmitter inserts 2 stop bits.

Transmission and reception are driven by a common baud rate generator, the clock for each is generated when the enable bit is set respectively for the transmitter and receiver.

The details of each block is given below.

Figure 444. Word length programming

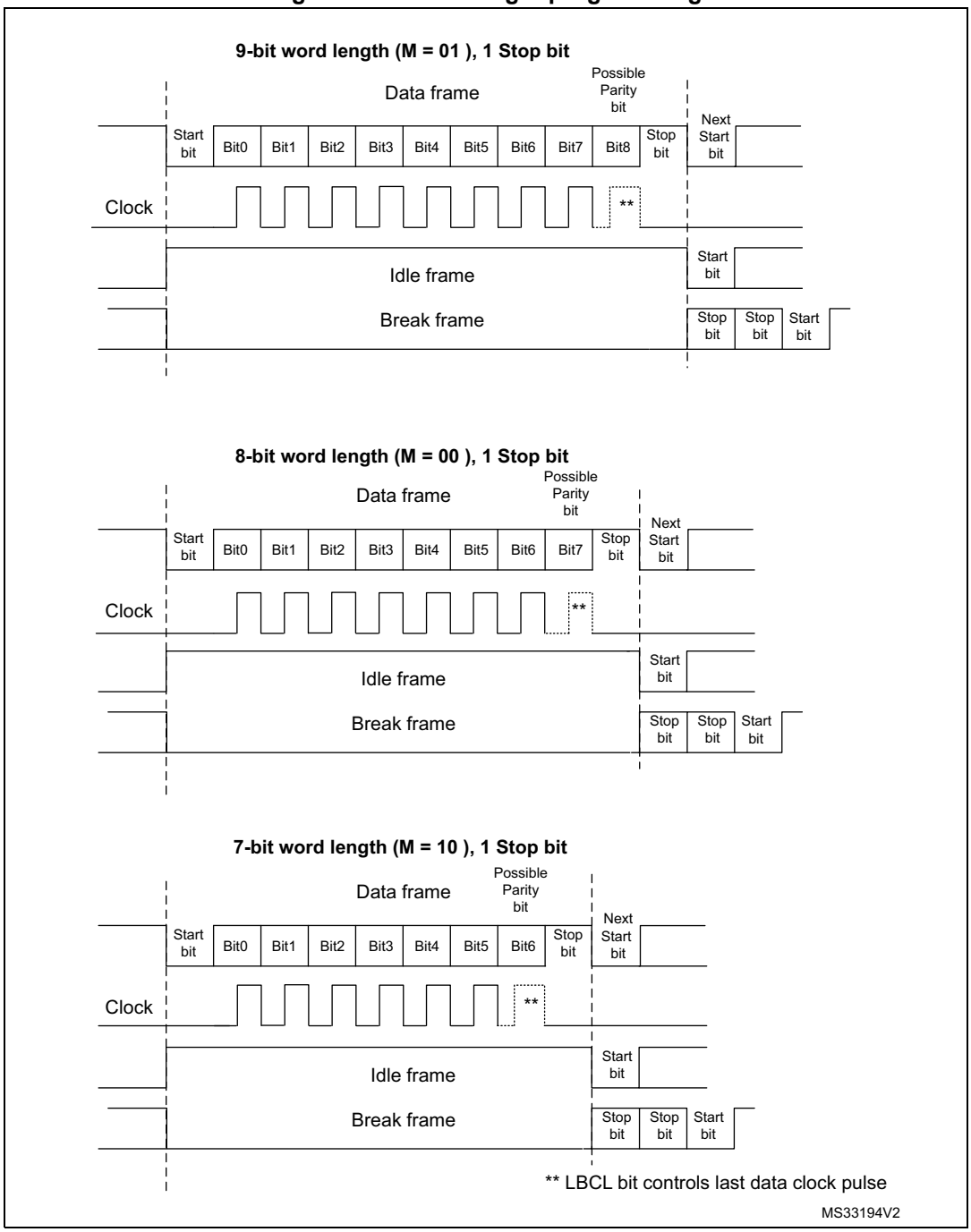

41.4.2 LPUART transmitter

The transmitter can send data words of either 7 or 8 or 9 bits depending on the M bits status. The Transmit Enable bit (TE) must be set in order to activate the transmitter function. The data in the transmit shift register is output on the TX pin.

Character transmission

During an LPUART transmission, data shifts out least significant bit first (default configuration) on the TX pin. In this mode, the LPUART_TDR register consists of a buffer (TDR) between the internal bus and the transmit shift register (see *Figure 418*).

Every character is preceded by a start bit which is a logic level low for one bit period. The character is terminated by a configurable number of stop bits.

The following stop bits are supported by LPUART: 1 and 2 stop bits.

Note: The TE bit must be set before writing the data to be transmitted to the LPUART_TDR.

The TE bit should not be reset during transmission of data. Resetting the TE bit during the transmission will corrupt the data on the TX pin as the baud rate counters will get frozen. The current data being transmitted will be lost.

An idle frame will be sent after the TE bit is enabled.

Configurable stop bits

The number of stop bits to be transmitted with every character can be programmed in Control register 2, bits 13,12.

- ***1 stop bit***: This is the default value of number of stop bits.
- ***2 stop bits***: This will be supported by normal LPUART, Single-wire and Modem modes.

An idle frame transmission will include the stop bits.

A break transmission will be 10 low bits (when M[1:0] = 00) or 11 low bits (when M[1:0] = 01) or 9 low bits (when M[1:0] = 10) followed by 2 stop bits. It is not possible to transmit long breaks (break of length greater than 9/10/11 low bits).

Figure 445. Configurable stop bits

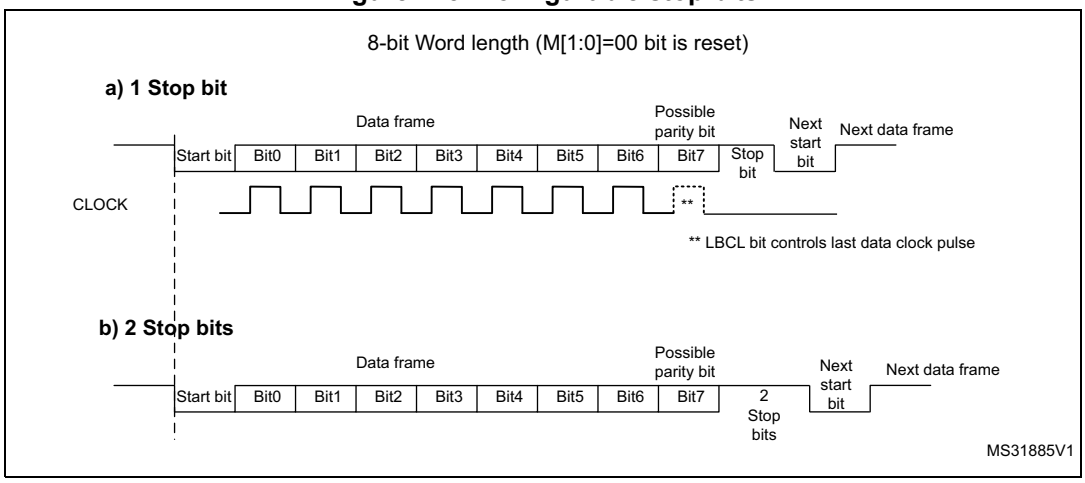

Character transmission procedure

1. Program the M bits in LPUART_CR1 to define the word length.
2. Select the desired baud rate using the LPUART_BRR register.
3. Program the number of stop bits in LPUART_CR2.
4. Enable the LPUART by writing the UE bit in LPUART_CR1 register to 1.
5. Select DMA enable (DMAT) in LPUART_CR3 if multibuffer Communication is to take place. Configure the DMA register as explained in multibuffer communication.
6. Set the TE bit in LPUART_CR1 to send an idle frame as first transmission.
7. Write the data to send in the LPUART_TDR register (this clears the TXE bit). Repeat this for each data to be transmitted in case of single buffer.
8. After writing the last data into the LPUART_TDR register, wait until TC=1. This indicates that the transmission of the last frame is complete. This is required for instance when the LPUART is disabled or enters the Halt mode to avoid corrupting the last transmission.

Single byte communication

Clearing the TXE bit is always performed by a write to the transmit data register.

The TXE bit is set by hardware and it indicates:

- The data has been moved from the LPUART_TDR register to the shift register and the data transmission has started.
- The LPUART_TDR register is empty.
- The next data can be written in the LPUART_TDR register without overwriting the previous data.

This flag generates an interrupt if the TXEIE bit is set.

When a transmission is taking place, a write instruction to the LPUART_TDR register stores the data in the TDR register; next, the data is copied in the shift register at the end of the currently ongoing transmission.

When no transmission is taking place, a write instruction to the LPUART_TDR register places the data in the shift register, the data transmission starts, and the TXE bit is set.

If a frame is transmitted (after the stop bit) and the TXE bit is set, the TC bit goes high. An interrupt is generated if the TCIE bit is set in the LPUART_CR1 register.

After writing the last data in the LPUART_TDR register, it is mandatory to wait for TC=1 before disabling the LPUART or causing the microcontroller to enter the low-power mode (see *Figure 421: TC/TXE behavior when transmitting*).

Figure 446. TC/TXE behavior when transmitting

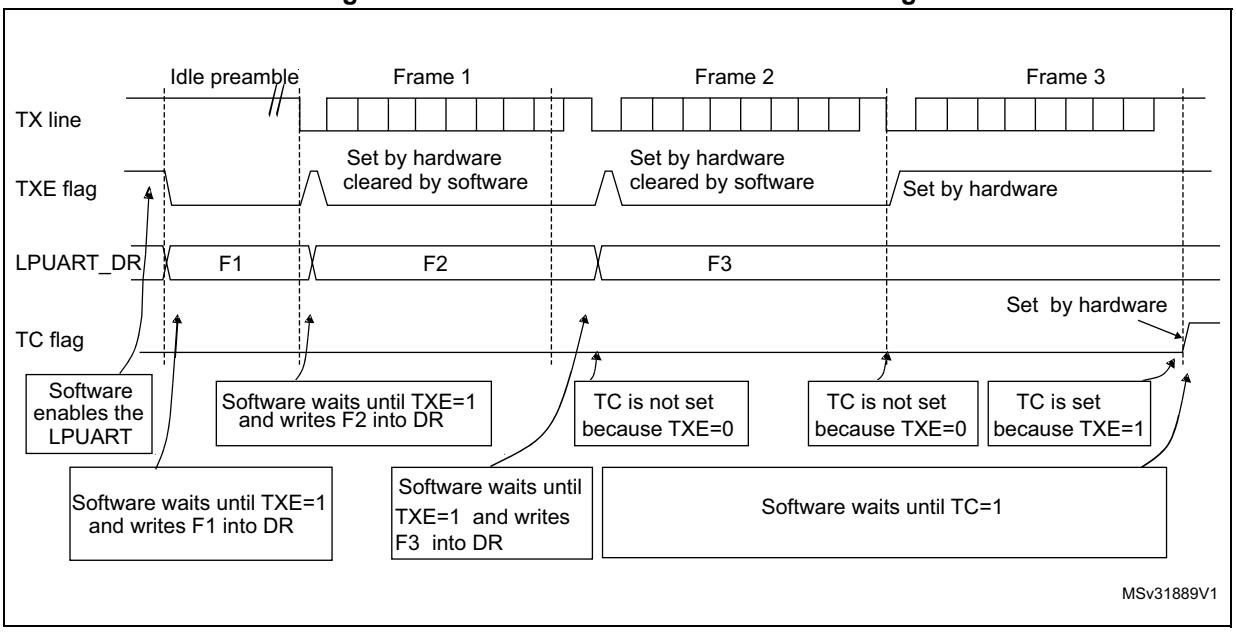

Break characters

Setting the SBKRQ bit transmits a break character. The break frame length depends on the M bits (see *Figure 444*).

If a ‘1’ is written to the SBKRQ bit, a break character is sent on the TX line after completing the current character transmission. The SBKF bit is set by the write operation and it is reset by hardware when the break character is completed (during the stop bits after the break character). The LPUART inserts a logic 1 signal (STOP) for the duration of 2 bits at the end of the break frame to guarantee the recognition of the start bit of the next frame.

In the case the application needs to send the break character following all previously inserted data, including the ones not yet transmitted, the software should wait for the TXE flag assertion before setting the SBKRQ bit.

Idle characters

Setting the TE bit drives the LPUART to send an idle frame before the first data frame.

41.4.3 LPUART receiver

The LPUART can receive data words of either 7 or 8 or 9 bits depending on the M bits in the LPUART_CR1 register.

Start bit detection

In LPUART, for START bit detection, a falling edge should be detected first on the Rx line, then a sample is taken in the middle of the start bit to confirm that it is still ‘0’. If the start sample is at ‘1’, then the noise error flag (NF) is set, then the START bit is discarded and the receiver waits for a new START bit. Else, the receiver continues to sample all incoming bits normally.

Character reception

During an LPUART reception, data shifts in least significant bit first (default configuration) through the RX pin. In this mode, the LPUART_RDR register consists of a buffer (RDR) between the internal bus and the received shift register.

Character reception procedure

1. Program the M bits in LPUART_CR1 to define the word length.
2. Select the desired baud rate using the baud rate register LPUART_BRR
3. Program the number of stop bits in LPUART_CR2.
4. Enable the LPUART by writing the UE bit in LPUART_CR1 register to 1.
5. Select DMA enable (DMAR) in LPUART_CR3 if multibuffer communication is to take place. Configure the DMA register as explained in multibuffer communication.
6. Set the RE bit LPUART_CR1. This enables the receiver which begins searching for a start bit.

When a character is received

- The RXNE bit is set. It indicates that the content of the shift register is transferred to the RDR. In other words, data has been received and can be read (as well as its associated error flags).
- An interrupt is generated if the RXNEIE bit is set.
- The error flags can be set if a frame error, noise or an overrun error has been detected during reception. PE flag can also be set with RXNE.
- In multibuffer, RXNE is set after every byte received and is cleared by the DMA read of the Receive data Register.
- In single buffer mode, clearing the RXNE bit is performed by a software read to the LPUART_RDR register. The RXNE flag can also be cleared by writing 1 to the RXFRQ in the LPUART_RQR register. The RXNE bit must be cleared before the end of the reception of the next character to avoid an overrun error.

Break character

When a break character is received, the LPUART handles it as a framing error.

Idle character

When an idle frame is detected, there is the same procedure as for a received data character plus an interrupt if the IDLEIE bit is set.

Overrun error

An overrun error occurs when a character is received when RXNE has not been reset. Data can not be transferred from the shift register to the RDR register until the RXNE bit is cleared.

The RXNE flag is set after every byte received. An overrun error occurs if RXNE flag is set when the next data is received or the previous DMA request has not been serviced. When an overrun error occurs:

- The ORE bit is set.
- The RDR content will not be lost. The previous data is available when a read to LPUART_RDR is performed.
- The shift register will be overwritten. After that point, any data received during overrun is lost.
- An interrupt is generated if either the RXNEIE bit is set or EIE bit is set.
- The ORE bit is reset by setting the ORECF bit in the ICR register.

Note: The ORE bit, when set, indicates that at least 1 data has been lost. There are two possibilities:

- if RXNE=1, then the last valid data is stored in the receive register RDR and can be read,

- if RXNE=0, then it means that the last valid data has already been read and thus there is nothing to be read in the RDR. This case can occur when the last valid data is read in the RDR at the same time as the new (and lost) data is received.

Selecting the clock source

The choice of the clock source is done through the Reset and Clock Control system (RCC). The clock source must be chosen before enabling the LPUART (by setting the UE bit).

The choice of the clock source must be done according to two criteria:

- Possible use of the LPUART in low-power mode
- Communication speed.

The clock source frequency is f_{CK}.

When the dual clock domain and the wakeup from Stop mode features are supported, the clock source can be one of the following sources: f_{PCLK} (default), f_{LSE}, f_{HSI} or f_{SYS}. Otherwise, the LPUART clock source is f_{PCLK} .

Choosing f_{LSE}, f_{HSI} as clock source may allow the LPUART to receive data while the MCU is in low-power mode. Depending on the received data and wakeup mode selection, the LPUART wakes up the MCU, when needed, in order to transfer the received data by software reading the LPUART_RDR register or by DMA.

For the other clock sources, the system must be active in order to allow LPUART communication.

The communication speed range (specially the maximum communication speed) is also determined by the clock source.

The receiver samples each incoming baud as close as possible to the middle of the baud-period. Only a single sample is taken of each of the incoming bauds.

Note: There is no noise detection for data.

Framing error

A framing error is detected when the stop bit is not recognized on reception at the expected time, following either a de-synchronization or excessive noise.

When the framing error is detected:

- The FE bit is set by hardware.
- The invalid data is transferred from the Shift register to the LPUART_RDR register.
- No interrupt is generated in case of single byte communication. However this bit rises at the same time as the RXNE bit which itself generates an interrupt. In case of multibuffer communication an interrupt will be issued if the EIE bit is set in the LPUART_CR3 register.

The FE bit is reset by writing 1 to the FECF in the LPUART_ICR register.

Configurable stop bits during reception

The number of stop bits to be received can be configured through the control bits of Control Register 2 - it can be either 1 or 2 in normal mode.

- ***1 stop bit***: Sampling for 1 stop Bit is done on the 8th, 9th and 10th samples.
- ***2 stop bits***: Sampling for the 2 stop bits is done in the middle of the second stop bit. The RXNE and FE flags are set just after this sample i.e. during the second stop bit. The first stop bit is not checked for framing error.

41.4.4 LPUART baud rate generation

The baud rate for the receiver and transmitter (Rx and Tx) are both set to the same value as programmed in the LPUART_BRR register.

$$\text{Tx/Rx baud} = \frac{256 \times f_{CK}}{\text{LPUARTDIV}}$$

LPUARTDIV is coded on the LPUART_BRR register.

Note: The baud counters are updated to the new value in the baud registers after a write operation to LPUART_BRR. Hence the baud rate register value should not be changed during communication.

It is forbidden to write values less than 0x300 in the LPUART_BRR register.

fck must be in the range [3 x baud rate, 4096 x baud rate].

The maximum baud rate that can be reached when the LPUART clock source is the LSE, is 9600 baud. Higher baud rates can be reached when the LPUART is clocked by clock sources different than the LSE clock. For example, if the LPUART clock source is the system clock (maximum is 80 MHz), the maximum baud rate that can be reached is 26 Mbaud.

Table 255. Error calculation for programmed baud rates at f_{ck} = 32,768 KHz

Baud rate		f_{CK} = 32,768 KHz		
S.No	Desired	Actual	Value programmed in the baud rate register	% Error = (Calculated - Desired) B.rate / Desired B.rate
1	300 Bps	300 Bps	0x6D3A	0
2	600 Bps	600 Bps	0x369D	0
3	1200 Bps	1200.087 Bps	0x1B4E	0.007
4	2400 Bps	2400.17 Bps	0xDA7	0.007
5	4800 Bps	4801.72 Bps	0x6D3	0.035
6	9600 Bps	9608.94 Bps	0x369	0.093

Table 256. Error calculation for programmed baud rates at f_{ck} = 80 MHz

Desired	Actual	Value programmed in the baud rate register	% Error = (Calculated - Desired) B.rate / Desired B.rate
38400	38400,02	82355	0,00006
57600	57600,09	56CE3	0,0001
115200	115200,50	2B671	0,0004
230400	230402,30	15B38	0,001
460800	460804,61	AD9C	0,001
921600	921609,22	56CE	0,001
4000000	4000000,00	1400	0
10000000	10000000,00	800	0
20000000	20000000,00	400	0
26000000	26022871,66	313	0,09

41.4.5 Tolerance of the LPUART receiver to clock deviation

The asynchronous receiver of the LPUART works correctly only if the total clock system deviation is less than the tolerance of the LPUART receiver. The causes which contribute to the total deviation are:

- DTRA: Deviation due to the transmitter error (which also includes the deviation of the transmitter's local oscillator)
- DQUANT: Error due to the baud rate quantization of the receiver
- DREC: Deviation of the receiver's local oscillator
- DTCL: Deviation due to the transmission line (generally due to the transceivers which can introduce an asymmetry between the low-to-high transition timing and the high-to-low transition timing)

$$\text{DTRA} + \text{DQUANT} + \text{DREC} + \text{DTCL} + \text{DWU} < \text{LPUART receiver tolerance}$$

where

DWU is the error due to sampling point deviation when the wakeup from Stop mode is used.

when M[1:0] = 01:

$$\text{DWU} = \frac{t_{\text{WULPUART}}}{11 \times \text{Tbit}}$$

when M[1:0] = 00:

$$\text{DWU} = \frac{t_{\text{WULPUART}}}{10 \times \text{Tbit}}$$

when M[1:0] = 10:

$$\text{DWU} = \frac{t_{\text{WULPUART}}}{9 \times \text{Tbit}}$$

t_{WULPUART} is the time between:

1. The detection of start bit falling edge
2. The instant when clock (requested by the peripheral) is ready and reaching the peripheral and regulator is ready.

t_{WULPUART} corresponds to t_{WUSTOP} value provided in the datasheet.

The LPUART receiver can receive data correctly at up to the maximum tolerated deviation specified in *Table 257*:

- 7, 8 or 9-bit character length defined by the M bits in the LPUARTx_CR1 register
- 1 or 2 stop bits

Table 257. Tolerance of the LPUART receiver

M bits	768 ≤ BRR <1024	1024 ≤ BRR < 2048	2048 ≤ BRR < 4096	4096 ≤ BRR
8 bits (M=00), 1 stop bit	1.82%	2.56%	3.90%	4.42%
9 bits (M=01), 1 stop bit	1.69%	2.33%	2.53%	4.14%
7 bits (M=10), 1 stop bit	2.08%	2.86%	4.35%	4.42%

Table 257. Tolerance of the LPUART receiver (continued)

M bits	768 ≤ BRR <1024	1024 ≤ BRR < 2048	2048 ≤ BRR < 4096	4096 ≤ BRR
8 bits (M=00), 2 stop bit	2.08%	2.86%	4.35%	4.42%
9 bits (M=01), 2 stop bit	1.82%	2.56%	3.90%	4.42%
7 bits (M=10), 2stop bit	2.34%	3.23%	4.92%	4.42%

Note: The data specified in Table 257 may slightly differ in the special case when the received frames contain some Idle frames of exactly 10-bit durations when M bits = 00 (11-bit durations when M bits =01 or 9- bit durations when M bits = 10).

41.4.6 Multiprocessor communication using LPUART

It is possible to perform multiprocessor communication with the LPUART (with several LPUARTs connected in a network). For instance one of the LPUARTs can be the master, its TX output connected to the RX inputs of the other LPUARTs. The others are slaves, their respective TX outputs are logically ANDed together and connected to the RX input of the master.

In multiprocessor configurations it is often desirable that only the intended message recipient should actively receive the full message contents, thus reducing redundant LPUART service overhead for all non addressed receivers.

The non addressed devices may be placed in mute mode by means of the muting function. In order to use the mute mode feature, the MME bit must be set in the LPUART_CR1 register.

In mute mode:

- None of the reception status bits can be set.
- All the receive interrupts are inhibited.
- The RWU bit in LPUART_ISR register is set to 1. RWU can be controlled automatically by hardware or by software, through the MMRQ bit in the LPUART_RQR register, under certain conditions.

The LPUART can enter or exit from mute mode using one of two methods, depending on the WAKE bit in the LPUART_CR1 register:

- Idle Line detection if the WAKE bit is reset,
- Address Mark detection if the WAKE bit is set.

Idle line detection (WAKE=0)

The LPUART enters mute mode when the MMRQ bit is written to 1 and the RWU is automatically set.

It wakes up when an Idle frame is detected. Then the RWU bit is cleared by hardware but the IDLE bit is not set in the LPUART_ISR register. An example of mute mode behavior using Idle line detection is given in *Figure 425*.

Figure 447. Mute mode using Idle line detection

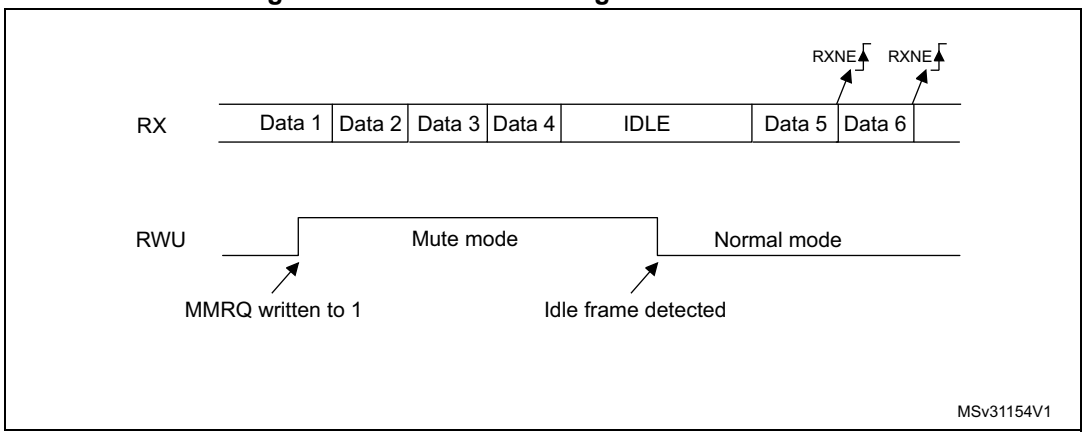

Note: If the MMRQ is set while the IDLE character has already elapsed, mute mode will not be entered (RWU is not set).

If the LPUART is activated while the line is IDLE, the idle state is detected after the duration of one IDLE frame (not only after the reception of one character frame).

4-bit/7-bit address mark detection (WAKE=1)

In this mode, bytes are recognized as addresses if their MSB is a ‘1’ otherwise they are considered as data. In an address byte, the address of the targeted receiver is put in the 4 or 7 LSBs. The choice of 7 or 4 bit address detection is done using the ADDM7 bit. This 4-bit/7-bit word is compared by the receiver with its own address which is programmed in the ADD bits in the LPUART_CR2 register.

Note: In 7-bit and 9-bit data modes, address detection is done on 6-bit and 8-bit addresses (ADD[5:0] and ADD[7:0]) respectively.

The LPUART enters mute mode when an address character is received which does not match its programmed address. In this case, the RWU bit is set by hardware. The RXNE flag is not set for this address byte and no interrupt or DMA request is issued when the LPUART enters mute mode.

The LPUART also enters mute mode when the MMRQ bit is written to 1. The RWU bit is also automatically set in this case.

The LPUART exits from mute mode when an address character is received which matches the programmed address. Then the RWU bit is cleared and subsequent bytes are received normally. The RXNE bit is set for the address character since the RWU bit has been cleared.

An example of mute mode behavior using address mark detection is given in *Figure 426*.

Figure 448. Mute mode using address mark detection

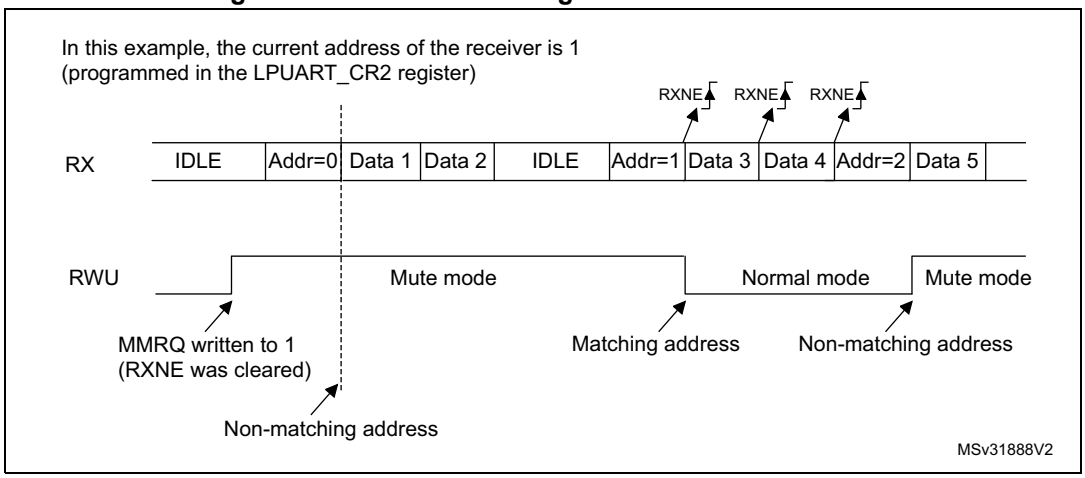

41.4.7 LPUART parity control

Parity control (generation of parity bit in transmission and parity checking in reception) can be enabled by setting the PCE bit in the LPUART_CR1 register. Depending on the frame length defined by the M bits, the possible LPUART frame formats are as listed in *Table 251*.

Table 258. Frame formats

M bits	PCE bit	LPUART frame(1)
00	0	| SB | 8-bit data | STB |
00	1	| SB | 7-bit data | PB | STB |
01	0	| SB | 9-bit data | STB |
01	1	| SB | 8-bit data | PB | STB |
10	0	| SB | 7-bit data | STB |
10	1	| SB | 6-bit data | PB | STB |

1. Legends: SB: start bit, STB: stop bit, PB: parity bit.
2. In the data register, the PB is always taking the MSB position (9th, 8th or 7th, depending on the M bits value).

Even parity

The parity bit is calculated to obtain an even number of “1s” inside the frame which is made of the 6, 7 or 8 LSB bits (depending on M bits values) and the parity bit.

As an example, if data=00110101, and 4 bits are set, then the parity bit will be 0 if even parity is selected (PS bit in LPUART_CR1 = 0).

Odd parity

The parity bit is calculated to obtain an odd number of “1s” inside the frame made of the 6, 7 or 8 LSB bits (depending on M bits values) and the parity bit.

As an example, if data=00110101 and 4 bits set, then the parity bit will be 1 if odd parity is selected (PS bit in LPUART_CR1 = 1).

Parity checking in reception

If the parity check fails, the PE flag is set in the LPUART_ISR register and an interrupt is generated if PEIE is set in the LPUART_CR1 register. The PE flag is cleared by software writing 1 to the PECF in the LPUART_ICR register.

Parity generation in transmission

If the PCE bit is set in LPUARTx_CR1, then the MSB bit of the data written in the data register is transmitted but is changed by the parity bit (even number of “1s” if even parity is selected (PS=0) or an odd number of “1s” if odd parity is selected (PS=1)).

41.4.8 Single-wire Half-duplex communication using LPUART

Single-wire Half-duplex mode is selected by setting the HDSEL bit in the LPUART_CR3 register. In this mode, the following bits must be kept cleared:

- LINEN and CLKEN bits in the LPUART_CR2 register,
- SCEN and IREN bits in the LPUART_CR3 register.

The LPUART can be configured to follow a Single-wire Half-duplex protocol where the TX and RX lines are internally connected. The selection between half- and Full-duplex communication is made with a control bit HDSEL in LPUART_CR3.

As soon as HDSEL is written to 1:

- The TX and RX lines are internally connected
- The RX pin is no longer used
- The TX pin is always released when no data is transmitted. Thus, it acts as a standard I/O in idle or in reception. It means that the I/O must be configured so that TX is configured as alternate function open-drain with an external pull-up.

Apart from this, the communication protocol is similar to normal LPUART mode. Any conflicts on the line must be managed by software (by the use of a centralized arbiter, for instance). In particular, the transmission is never blocked by hardware and continues as soon as data is written in the data register while the TE bit is set.

Note: In LPUART, in the case of 1-stop bit configuration, the RXNE flag is set in the middle of the stop bit.

41.4.9 Continuous communication in DMA mode using LPUART

The LPUART is capable of performing continuous communication using the DMA. The DMA requests for Rx buffer and Tx buffer are generated independently.

Note: Use the LPUART as explained in Section 41.4.3. To perform continuous communication, you can clear the TXE/ RXNE flags In the LPUART_ISR register.

Transmission using DMA

DMA mode can be enabled for transmission by setting DMAT bit in the LPUART_CR3 register. Data is loaded from a SRAM area configured using the DMA peripheral (refer to *Section 11: Direct memory access controller (DMA) on page 337*) to the LPUART_TDR register whenever the TXE bit is set. To map a DMA channel for LPUART transmission, use the following procedure (x denotes the channel number):

1. Write the LPUART_TDR register address in the DMA control register to configure it as the destination of the transfer. The data is moved to this address from memory after each TXE event.
2. Write the memory address in the DMA control register to configure it as the source of the transfer. The data is loaded into the LPUART_TDR register from this memory area after each TXE event.
3. Configure the total number of bytes to be transferred to the DMA control register.
4. Configure the channel priority in the DMA register
5. Configure DMA interrupt generation after half/ full transfer as required by the application.
6. Clear the TC flag in the LPUART_ISR register by setting the TCCF bit in the LPUART_ICR register.
7. Activate the channel in the DMA register.

When the number of data transfers programmed in the DMA Controller is reached, the DMA controller generates an interrupt on the DMA channel interrupt vector.

In transmission mode, once the DMA has written all the data to be transmitted (the TCIF flag is set in the DMA_ISR register), the TC flag can be monitored to make sure that the LPUART communication is complete. This is required to avoid corrupting the last transmission before disabling the LPUART or entering Stop mode. Software must wait until TC=1. The TC flag remains cleared during all data transfers and it is set by hardware at the end of transmission of the last frame.

Figure 449. Transmission using DMA

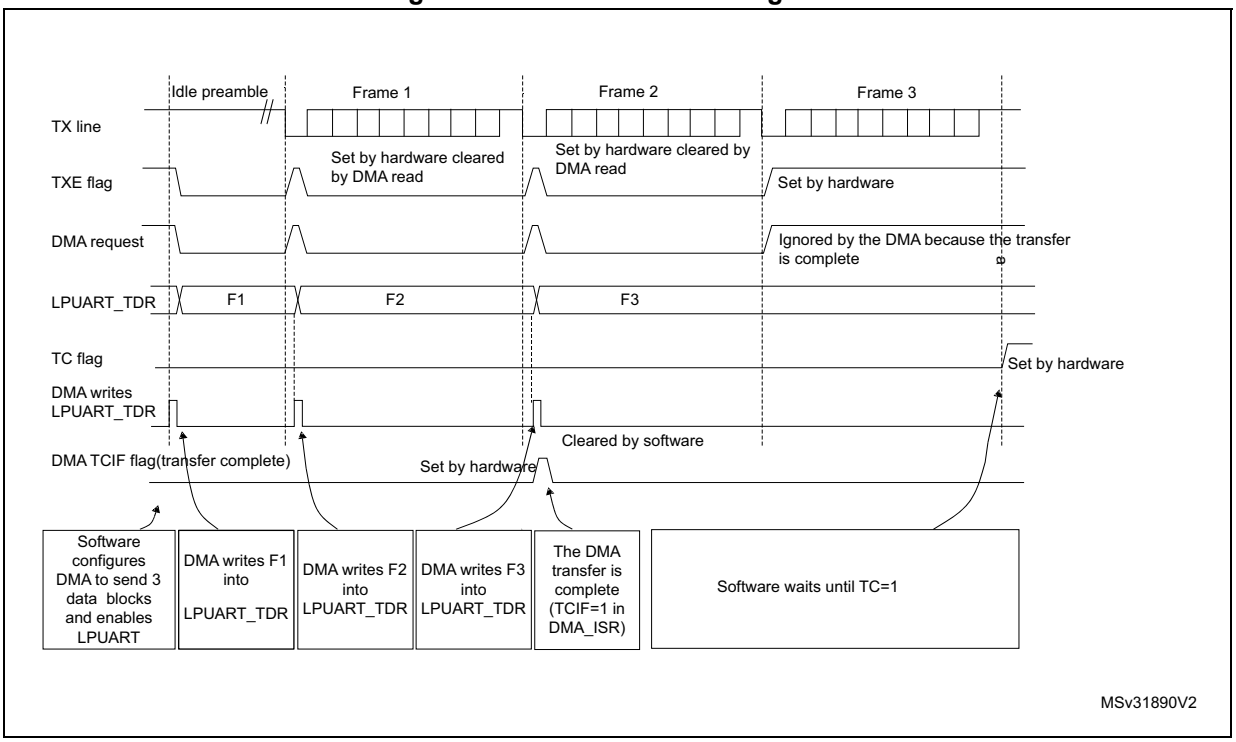

Reception using DMA

DMA mode can be enabled for reception by setting the DMAR bit in LPUART_CR3 register. Data is loaded from the LPUART_RDR register to a SRAM area configured using the DMA peripheral (refer *Section 11: Direct memory access controller (DMA) on page 337*) whenever a data byte is received. To map a DMA channel for LPUART reception, use the following procedure:

1. Write the LPUART_RDR register address in the DMA control register to configure it as the source of the transfer. The data is moved from this address to the memory after each RXNE event.
2. Write the memory address in the DMA control register to configure it as the destination of the transfer. The data is loaded from LPUART_RDR to this memory area after each RXNE event.
3. Configure the total number of bytes to be transferred to the DMA control register.
4. Configure the channel priority in the DMA control register
5. Configure interrupt generation after half/ full transfer as required by the application.
6. Activate the channel in the DMA control register.

When the number of data transfers programmed in the DMA Controller is reached, the DMA controller generates an interrupt on the DMA channel interrupt vector.

Figure 450. Reception using DMA

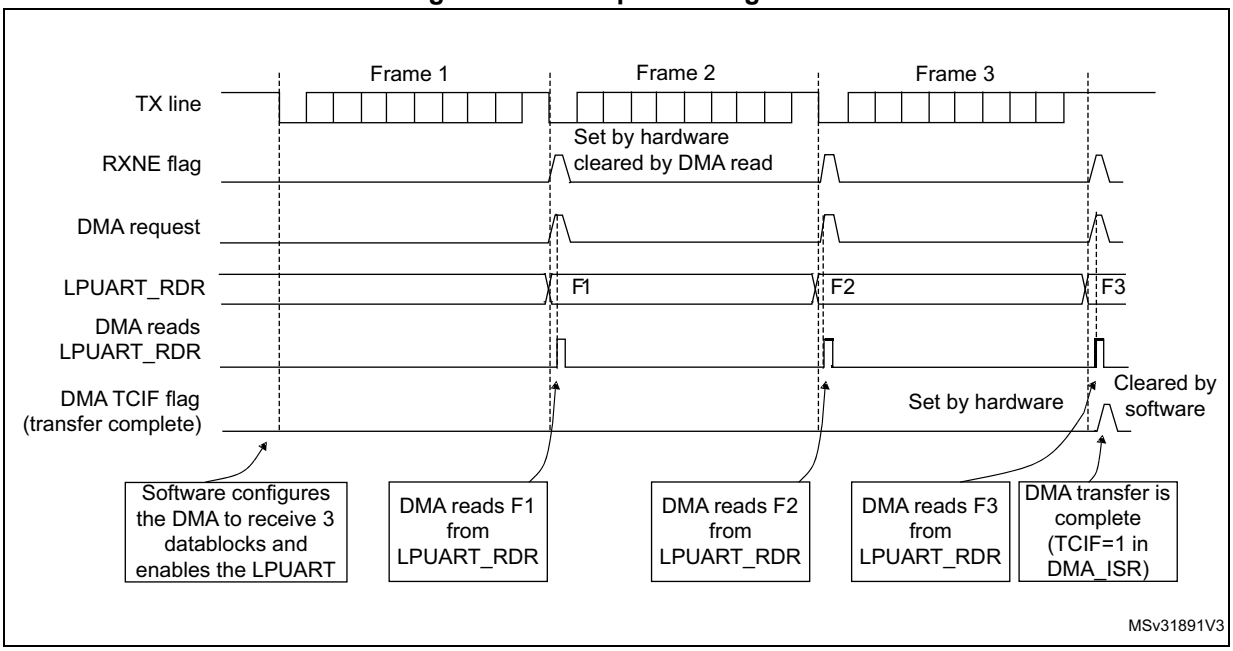

Error flagging and interrupt generation in multibuffer communication

In multibuffer communication if any error occurs during the transaction the error flag is asserted after the current byte. An interrupt is generated if the interrupt enable flag is set. For framing error, overrun error and noise flag which are asserted with RXNE in single byte reception, there is a separate error flag interrupt enable bit (EIE bit in the LPUART_CR3 register), which, if set, enables an interrupt after the current byte if any of these errors occur.

41.4.10 RS232 Hardware flow control and RS485 Driver Enable using LPUART

It is possible to control the serial data flow between 2 devices by using the CTS input and the RTS output. The *Figure 439* shows how to connect 2 devices in this mode:

Figure 451. Hardware flow control between 2 LPUARTs

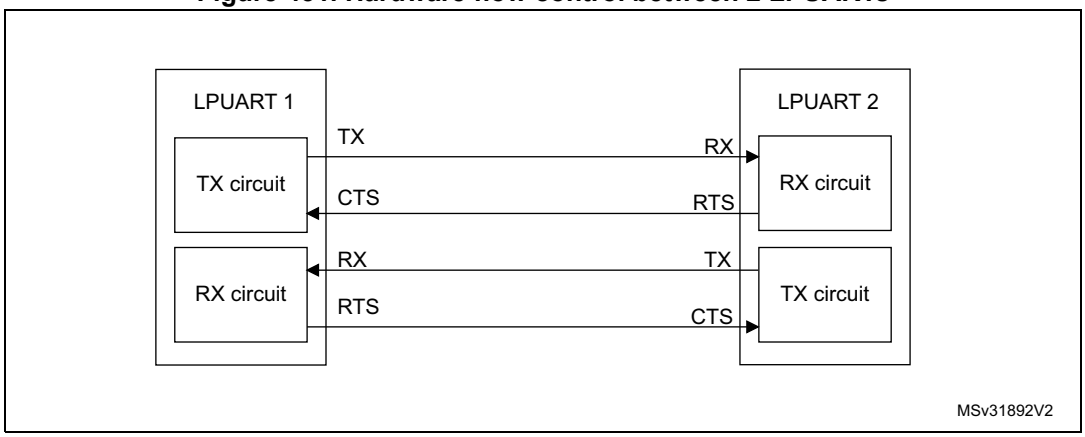

RS232 RTS and CTS flow control can be enabled independently by writing the RTSE and CTSE bits respectively to 1 (in the LPUART_CR3 register).

RS232 RTS flow control

If the RTS flow control is enabled (RTSE=1), then RTS is asserted (tied low) as long as the LPUART receiver is ready to receive a new data. when the receive register is full, RTS is de-asserted, indicating that the transmission is expected to stop at the end of the current frame. *Figure 440* shows an example of communication with RTS flow control enabled.

Figure 452. RS232 RTS flow control

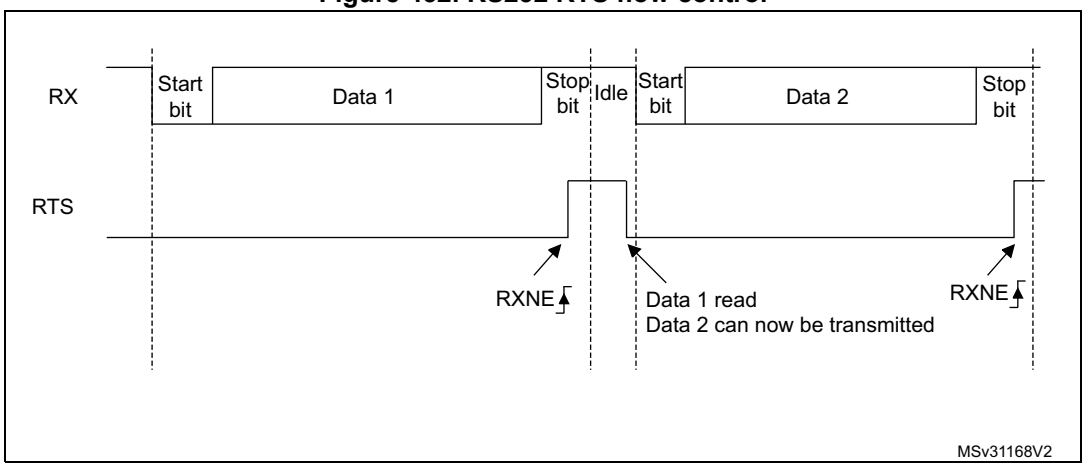

RS232 CTS flow control

If the CTS flow control is enabled (CTSE=1), then the transmitter checks the CTS input before transmitting the next frame. If CTS is asserted (tied low), then the next data is transmitted (assuming that data is to be transmitted, in other words, if TXE=0), else the transmission does not occur. When CTS is de-asserted during a transmission, the current transmission is completed before the transmitter stops.

When CTSE=1, the CTSIF status bit is automatically set by hardware as soon as the CTS input toggles. It indicates when the receiver becomes ready or not ready for communication. An interrupt is generated if the CTSIE bit in the LPUART_CR3 register is set. *Figure 441* shows an example of communication with CTS flow control enabled.

Figure 453. RS232 CTS flow control

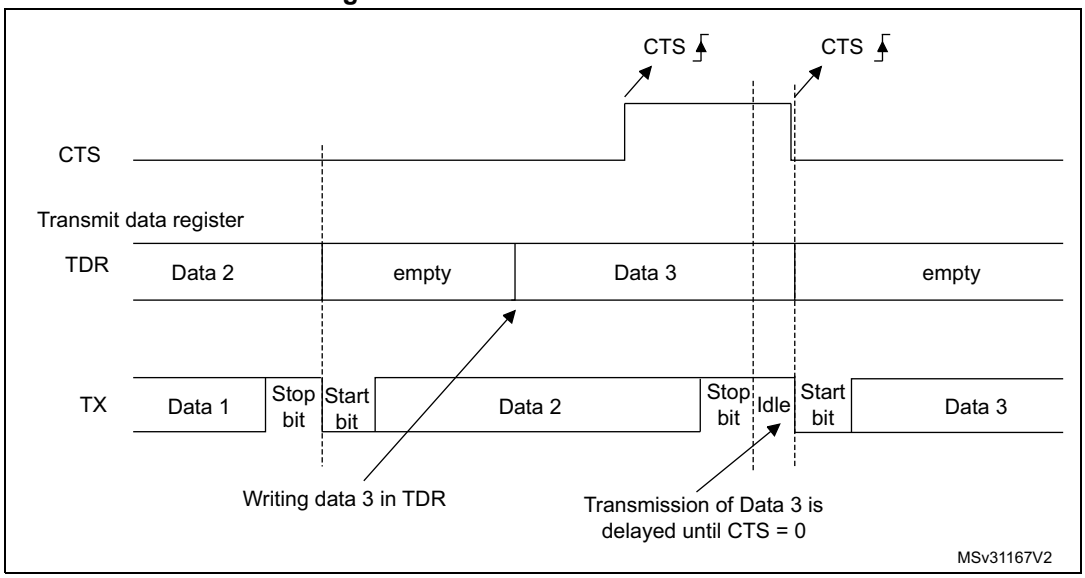

Note: For correct behavior, CTS must be asserted at least 3 LPUART clock source periods before the end of the current character. In addition it should be noted that the CTSCF flag may not be set for pulses shorter than 2 x PCLK periods.

RS485 Driver Enable

The driver enable feature is enabled by setting bit DEM in the LPUART_CR3 control register. This allows the user to activate the external transceiver control, through the DE (Driver Enable) signal. The assertion time is the time between the activation of the DE signal and the beginning of the START bit. It is programmed using the DEAT [4:0] bit fields in the LPUART_CR1 control register. The de-assertion time is the time between the end of the last stop bit, in a transmitted message, and the de-activation of the DE signal. It is programmed using the DEDT [4:0] bit fields in the LPUART_CR3 control register. The polarity of the DE signal can be configured using the DEP bit in the LPUART_CR3 control register.

In LPUART, the DEAT and DEDT are expressed in USART clock source (f_{CK}) cycles:

- The Driver enable assertion time =
  - (1 + (DEAT x P)) x f_{CK} , if P <> 0
  - (1 + DEAT) x f_{CK} , if P = 0
- The Driver enable de-assertion time =
  - (1 + (DEDT x P)) x f_{CK} , if P <> 0
  - (1 + DEDT) x f_{CK} , if P = 0

With P = BRR[14:11]

41.4.11 Wakeup from Stop mode using LPUART

The LPUART is able to wake up the MCU from Stop mode when the UESM bit is set and the LPUART clock is set to HSI16 or LSE (refer to the *Reset and clock control (RCC) section*.

- LPUART source clock is HSI

  If during stop mode the HSI clock is switched OFF, when a falling edge on the LPUART receive line is detected, the LPUART interface requests the HSI clock to be switched ON. The HSI clock is then used for the frame reception.

  – If the wakeup event is verified, the MCU wakes up from low-power mode and data reception goes on normally.

  – If the wakeup event is not verified, the HSI clock is switched OFF again, the MCU is not waken up and stays in low-power mode and the clock request is released.

- LPUART source clock is LSE

  Same principle as described in case of LPUART source clock is HSI with the difference that the LSE is ON in stop mode, but the LSE clock is not propagated to LPUART if the LPUART is not requesting it. The LSE clock is not OFF but there is a clock gating to avoid useless consumption.

When the LPUART clock source is configured to be f_{LSE} or f_{HSI}, it is possible to keep enabled this clock during STOP mode by setting the UCESM bit in LPUART_CR3 control register.

Note: When LPUART is used to wakeup from stop with LSE is selected as LPUART clock source, and desired baud rate is 9600 baud, the bit UCESM bit in LPUART_CR3 control register must be set.

The MCU wakeup from Stop mode can be done using the standard RXNE interrupt. In this case, the RXNEIE bit must be set before entering Stop mode.

Alternatively, a specific interrupt may be selected through the WUS bit fields.

In order to be able to wake up the MCU from Stop mode, the UESM bit in the LPUART_CR1 control register must be set prior to entering Stop mode.

When the wakeup event is detected, the WUF flag is set by hardware and a wakeup interrupt is generated if the WUFIE bit is set.

Note: Before entering Stop mode, the user must ensure that the LPUART is not performing a transfer. BUSY flag cannot ensure that Stop mode is never entered during a running reception.

The WUF flag is set when a wakeup event is detected, independently of whether the MCU is in Stop or in an active mode.

When entering Stop mode just after having initialized and enabled the receiver, the REACK bit must be checked to ensure the LPUART is actually enabled.

When DMA is used for reception, it must be disabled before entering Stop mode and re-enabled upon exit from Stop mode.

The wakeup from Stop mode feature is not available for all modes. For example it doesn't work in SPI mode because the SPI operates in master mode only.

Using Mute mode with Stop mode

If the LPUART is put into Mute mode before entering Stop mode:

- Wakeup from Mute mode on idle detection must not be used, because idle detection cannot work in Stop mode.
- If the wakeup from Mute mode on address match is used, then the source of wake-up from Stop mode must also be the address match. If the RXNE flag is set when entering the Stop mode, the interface will remain in mute mode upon address match and wake up from Stop.
- If the LPUART is configured to wake up the MCU from Stop mode on START bit detection, the WUF flag is set, but the RXNE flag is not set.

Determining the maximum LPUART baud rate allowing to wakeup correctly from Stop mode when the LPUART clock source is the HSI clock

The maximum baud rate allowing to wakeup correctly from stop mode depends on:

- the parameter $t_{WULPUART}$ (wakeup time from Stop mode) provided in the device datasheet
- the LPUART receiver tolerance provided in the *Section 41.4.5: Tolerance of the LPUART receiver to clock deviation*.

Let us take this example: M bits = 01, 2 stop bits, BRR ≥ 4096.

In these conditions, according to *Table 257: Tolerance of the LPUART receiver*, the LPUART receiver tolerance is 4.42 %.

DTRA + DQUANT + DREC + DTCL + DWU < LPUART receiver tolerance

DWU max = $t_{WULPUART}$ / (11 x Tbit Min)

Tbit Min = $t_{WULPUART}$ / (11 x DWU max)

If we consider an ideal case where the parameters DTRA, DQUANT, DREC and DTCL are at 0%, the DWU max is 4.42 %. In reality, we need to consider at least the HSI inaccuracy.

Let us consider the HSI inaccuracy = 1 %, $t_{WULPUART}$ = 1.7 µs (in case of Stop mode with main regulator in Run mode, Range 1):

DWU max = 4.42 % - 1 % = 3.42 %

Tbit min = 1.7 µs / (11 x 3.42 %) = 4.5 µs.

In these conditions, the maximum baud rate allowing to wakeup correctly from Stop mode is 1/ 4.5 µs = 220 Kbaud.

41.5 LPUART low-power mode

Table 259. Effect of low-power modes on the LPUART

Mode	Description
Sleep	No effect.
Low-power run	No effect.
Low-power sleep	No effect. USART interrupt causes the device to exit Low-power sleep mode.

Table 259. Effect of low-power modes on the LPUART (continued)

Mode	Description
Stop 0, Stop 1 and Stop 2	The LPUART registers content is kept. The LPUART is able to wake up the MCU from Stop 0, Stop 1 and Stop 2 modes when the UESM bit is set and the LPUART clock is set to HSI16 or LSE. The MCU wakeup from Stop 0, Stop 1 and 2 modes can be done using either the standard RXNE or the WUF interrupt.
Standby	The LPUART is powered down and must be reinitialized when the device has exited from Standby or Shutdown mode.
Shutdown	

41.6 LPUART interrupts

Table 260. LPUART interrupt requests

Interrupt event	Event flag	Enable Control bit
Transmit data register empty	TXE	TXEIE
CTS interrupt	CTSIF	CTSIE
Transmission Complete	TC	TCIE
Receive data register not empty (data ready to be read)	RXNE	RXNEIE
Overrun error detected	ORE	
Idle line detected	IDLE	IDLEIE
Parity error	PE	PEIE
Noise Flag, Overrun error and Framing Error in multibuffer communication.	NF or ORE or FE	EIE
Character match	CMF	CMIE
Wakeup from Stop mode	WUF(1)	WUFIE

1. The wUF interrupt is active only in Stop mode.

The LPUART interrupt events are connected to the same interrupt vector (see *Figure 442*).

- During transmission: Transmission Complete, Clear to Send, Transmit data Register empty or Framing error interrupt.
- During reception: Idle Line detection, Overrun error, Receive data register not empty, Parity error, Noise Flag, Framing Error, Character match, etc.

These events generate an interrupt if the corresponding Enable Control Bit is set.

Figure 454. LPUART interrupt mapping diagram

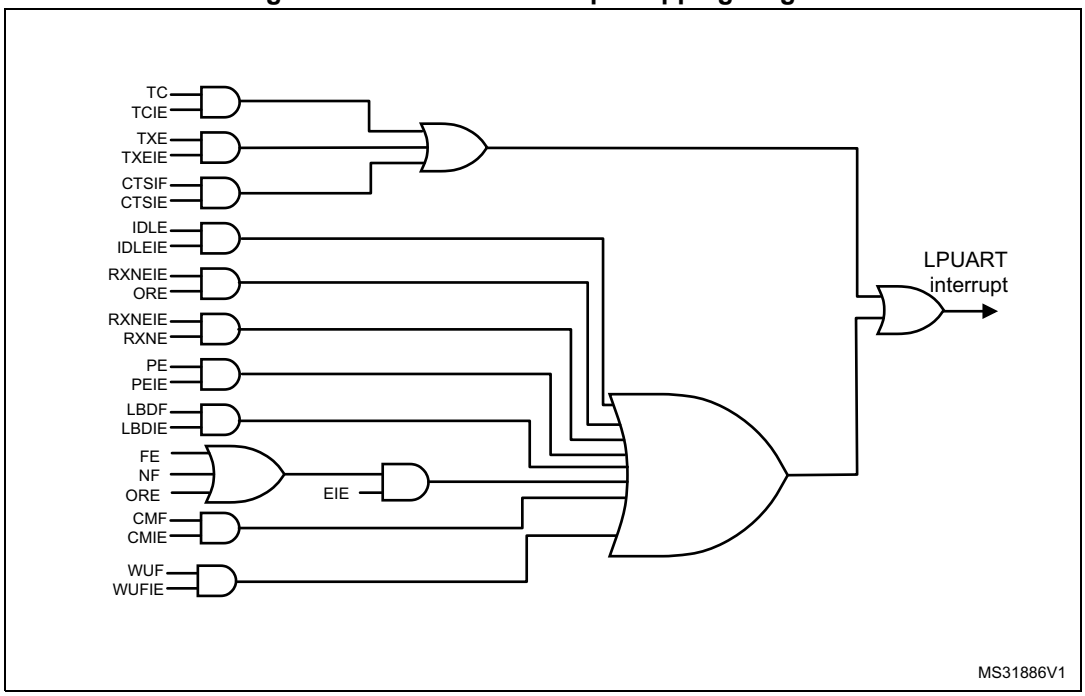

41.7 LPUART registers

Refer to *Section 1.2 on page 69* for a list of abbreviations used in register descriptions.

The peripheral registers have to be accessed by words (32 bits).

41.7.1 Control register 1 (LPUART_CR1)

Address offset: 0x00

Reset value: 0x0000

31	30	29	28	27	26	25	24	23	22	21	20	19	18	17	16
Res.	Res.	Res.	M1	Res.	Res.	DEAT[4:0]					DEDT[4:0]				
			rw			rw	rw	rw	rw	rw	rw	rw	rw	rw	rw
15	14	13	12	11	10	9	8	7	6	5	4	3	2	1	0
Res.	CMIE	MME	M0	WAKE	PCE	PS	PEIE	TXEIE	TCIE	RXNEIE	IDLEIE	TE	RE	UESM	UE
	rw	rw	rw	rw	rw	rw	rw	rw	rw	rw	rw	rw	rw	rw	rw

Bits 31:29 Reserved, must be kept at reset value

Bit 28 **M1**: Word length

This bit, with bit 12 (M0) determines the word length. It is set or cleared by software.
M[1:0] = 00: 1 Start bit, 8 data bits, n stop bits
M[1:0] = 01: 1 Start bit, 9 data bits, n stop bits
M[1:0] = 10: 1 Start bit, 7 data bits, n stop bits
This bit can only be written when the LPUART is disabled (UE=0).

Bit 27 Reserved, must be kept at reset value

Bit 26 Reserved, must be kept at reset value

Bits 25:21 **DEAT[4:0]**: Driver Enable assertion time

This 5-bit value defines the time between the activation of the DE (Driver Enable) signal and the beginning of the start bit. It is expressed in UCLK (USART clock) clock cycles. For more details, refer to RS485 Driver Enable paragraph.
This bit field can only be written when the LPUART is disabled (UE=0).

Bits 20:16 **DEDT[4:0]**: Driver Enable de-assertion time

This 5-bit value defines the time between the end of the last stop bit, in a transmitted message, and the de-activation of the DE (Driver Enable) signal. It is expressed in UCLK (USART clock) clock cycles. For more details, refer to RS485 Driver Enable paragraph.
If the LPUART_TDR register is written during the DEDT time, the new data is transmitted only when the DEDT and DEAT times have both elapsed.
This bit field can only be written when the LPUART is disabled (UE=0).

Bit 15 Reserved, must be kept at reset value

Bit 14 **CMIE**: Character match interrupt enable

This bit is set and cleared by software.
0: Interrupt is inhibited
1: A LPUART interrupt is generated when the CMF bit is set in the LPUART_ISR register.

Bit 13 **MME**: Mute mode enable

This bit activates the mute mode function of the LPUART. When set, the LPUART can switch between the active and mute modes, as defined by the WAKE bit. It is set and cleared by software.

0: Receiver in active mode permanently

1: Receiver can switch between mute mode and active mode.

Bit 12 **M0**: Word length

This bit, with bit 28 (M1) determines the word length. It is set or cleared by software. See Bit 28 (M1) description.

This bit can only be written when the LPUART is disabled (UE=0).

Bit 11 **WAKE**: Receiver wakeup method

This bit determines the LPUART wakeup method from Mute mode. It is set or cleared by software.

0: Idle line

1: Address mark

This bit field can only be written when the LPUART is disabled (UE=0).

Bit 10 **PCE**: Parity control enable

This bit selects the hardware parity control (generation and detection). When the parity control is enabled, the computed parity is inserted at the MSB position (9th bit if M=1; 8th bit if M=0) and parity is checked on the received data. This bit is set and cleared by software. Once it is set, PCE is active after the current byte (in reception and in transmission).

0: Parity control disabled

1: Parity control enabled

This bit field can only be written when the LPUART is disabled (UE=0).

Bit 9 **PS**: Parity selection

This bit selects the odd or even parity when the parity generation/detection is enabled (PCE bit set). It is set and cleared by software. The parity will be selected after the current byte.

0: Even parity

1: Odd parity

This bit field can only be written when the LPUART is disabled (UE=0).

Bit 8 **PEIE**: PE interrupt enable

This bit is set and cleared by software.

0: Interrupt is inhibited

1: An LPUART interrupt is generated whenever PE=1 in the LPUART_ISR register

Bit 7 **TXEIE**: interrupt enable

This bit is set and cleared by software.

0: Interrupt is inhibited

1: An LPUART interrupt is generated whenever TXE=1 in the LPUART_ISR register

Bit 6 **TCIE**: Transmission complete interrupt enable

This bit is set and cleared by software.

0: Interrupt is inhibited

1: An LPUART interrupt is generated whenever TC=1 in the LPUART_ISR register

Bit 5 **RXNEIE**: RXNE interrupt enable

This bit is set and cleared by software.

0: Interrupt is inhibited

1: An LPUART interrupt is generated whenever ORE=1 or RXNE=1 in the LPUART_ISR register

Bit 4 **IDLEIE**: IDLE interrupt enable

This bit is set and cleared by software.

0: Interrupt is inhibited

1: An LPUART interrupt is generated whenever IDLE=1 in the LPUART_ISR register

Bit 3 **TE**: Transmitter enable

This bit enables the transmitter. It is set and cleared by software.

0: Transmitter is disabled

1: Transmitter is enabled

Note: During transmission, a "0" pulse on the TE bit ("0" followed by "1") sends a preamble (idle line) after the current word. In order to generate an idle character, the TE must not be immediately written to 1. In order to ensure the required duration, the software can poll the TEACK bit in the LPUART_ISR register.

When TE is set there is a 1 bit-time delay before the transmission starts.

Bit 2 **RE**: Receiver enable

This bit enables the receiver. It is set and cleared by software.

0: Receiver is disabled

1: Receiver is enabled and begins searching for a start bit

Bit 1 **UESM**: LPUART enable in Stop mode

When this bit is cleared, the LPUART is not able to wake up the MCU from Stop mode.

When this bit is set, the LPUART is able to wake up the MCU from Stop mode, provided that the LPUART clock selection is HSI or LSE in the RCC.

This bit is set and cleared by software.

0: LPUART not able to wake up the MCU from Stop mode.

1: LPUART able to wake up the MCU from Stop mode. When this function is active, the clock source for the LPUART must be HSI or LSE (see Section Reset and clock control (RCC)).

Note: It is recommended to set the UESM bit just before entering Stop mode and clear it on exit from Stop mode.

Bit 0 **UE**: LPUART enable

When this bit is cleared, the LPUART prescalers and outputs are stopped immediately, and current operations are discarded. The configuration of the LPUART is kept, but all the status flags, in the LPUART_ISR are reset. This bit is set and cleared by software.

0: LPUART prescaler and outputs disabled, low-power mode

1: LPUART enabled

Note: In order to go into low-power mode without generating errors on the line, the TE bit must be reset before and the software must wait for the TC bit in the LPUART_ISR to be set before resetting the UE bit.

The DMA requests are also reset when UE = 0 so the DMA channel must be disabled before resetting the UE bit.

41.7.2 Control register 2 (LPUART_CR2)

Address offset: 0x04

Reset value: 0x0000

31	30	29	28	27	26	25	24	23	22	21	20	19	18	17	16
ADD[7:4]				ADD[3:0]				Res.	Res.	Res.	Res.	MSBFIRST	DATAINV	TXINV	RXINV
rw	rw	rw	rw	rw	rw	rw	rw					rw	rw	rw	rw
15	14	13	12	11	10	9	8	7	6	5	4	3	2	1	0
SWAP	Res.	STOP[1:0]		Res.	Res.	Res.	Res.	Res.	Res.	Res.	ADDM7	Res.	Res.	Res.	Res.
rw		rw	rw								rw				

Bits 31:28 **ADD[7:4]**: Address of the LPUART node

This bit-field gives the address of the LPUART node or a character code to be recognized.

This is used in multiprocessor communication during Mute mode or Stop mode, for wakeup with 7-bit address mark detection. The MSB of the character sent by the transmitter should be equal to 1. It may also be used for character detection during normal reception, Mute mode inactive (for example, end of block detection in Modbus protocol). In this case, the whole received character (8-bit) is compared to the ADD[7:0] value and CMF flag is set on match.

This bit field can only be written when reception is disabled (RE = 0) or the LPUART is disabled (UE=0)

Bits 27:24 **ADD[3:0]**: Address of the LPUART node

This bit-field gives the address of the LPUART node or a character code to be recognized.

This is used in multiprocessor communication during Mute mode or Stop mode, for wakeup with address mark detection.

This bit field can only be written when reception is disabled (RE = 0) or the LPUART is disabled (UE=0)

Bits 23:20 Reserved, must be kept at reset value

Bit 19 **MSBFIRST**: Most significant bit first

This bit is set and cleared by software.

0: data is transmitted/received with data bit 0 first, following the start bit.

1: data is transmitted/received with the MSB (bit 7/8/9) first, following the start bit.

This bit field can only be written when the LPUART is disabled (UE=0).

Bit 18 **DATAINV:** Binary data inversion

This bit is set and cleared by software.

0: Logical data from the data register are send/received in positive/direct logic. (1=H, 0=L)

1: Logical data from the data register are send/received in negative/inverse logic. (1=L, 0=H). The parity bit is also inverted.

This bit field can only be written when the LPUART is disabled (UE=0).

Bit 17 **TXINV:** TX pin active level inversion

This bit is set and cleared by software.

0: TX pin signal works using the standard logic levels (V_{DD} =1/idle, Gnd=0/mark)

1: TX pin signal values are inverted. (V_{DD} =0/mark, Gnd=1/idle).

This allows the use of an external inverter on the TX line.

This bit field can only be written when the LPUART is disabled (UE=0).

Bit 16 **RXINV:** RX pin active level inversion

This bit is set and cleared by software.

0: RX pin signal works using the standard logic levels (V_{DD} =1/idle, Gnd=0/mark)

1: RX pin signal values are inverted. ((V_{DD} =0/mark, Gnd=1/idle).

This allows the use of an external inverter on the RX line.

This bit field can only be written when the LPUART is disabled (UE=0).

Bit 15 **SWAP:** Swap TX/RX pins

This bit is set and cleared by software.

0: TX/RX pins are used as defined in standard pinout

1: The TX and RX pins functions are swapped. This allows to work in the case of a cross-wired connection to another UART.

This bit field can only be written when the LPUART is disabled (UE=0).

Bit 14 Reserved, must be kept at reset value

Bits 13:12 **STOP[1:0]**: STOP bits

These bits are used for programming the stop bits.

00: 1 stop bit

01: Reserved.

10: 2 stop bits

11: Reserved

This bit field can only be written when the LPUART is disabled (UE=0).

Bits 11:5 Reserved, must be kept at reset value

Bit 4 **ADDM7**:7-bit Address Detection/4-bit Address Detection

This bit is for selection between 4-bit address detection or 7-bit address detection.

0: 4-bit address detection

1: 7-bit address detection (in 8-bit data mode)

This bit can only be written when the LPUART is disabled (UE=0)

Note: In 7-bit and 9-bit data modes, the address detection is done on 6-bit and 8-bit address (ADD[5:0] and ADD[7:0]) respectively.

Bits 3:0 Reserved, must be kept at reset value.

41.7.3 Control register 3 (LPUART_CR3)

Address offset: 0x08

Reset value: 0x0000

31	30	29	28	27	26	25	24	23	22	21	20	19	18	17	16
Res.	Res.	Res.	Res.	Res.	Res.	Res.	Res.	UCESM	WUFIE	WUS[2:0]		Res.	Res.	Res.	Res.
								rw	rw	rw	rw				

15	14	13	12	11	10	9	8	7	6	5	4	3	2	1	0
DEP	DEM	DDRE	OVR DIS	Res.	CTSIE	CTSE	RTSE	DMAT	DMAR	Res.	Res.	HD SEL	Res.	Res.	EIE
rw	rw	rw	rw		rw	rw	rw	rw	rw			rw			rw

Bits 31:24 Reserved, must be kept at reset value.

Bit 23 **UCESM**: LPUART Clock Enable in Stop mode.

This bit is set and cleared by software.

0: LPUART Clock is disabled in STOP mode.

1: LPUART Clock is enabled in STOP mode.

Note: In order to be able to wakeup the MCU from stop mode with LPUART at 9600 baud, the UCESM bit must be set prior to entering the stop mode.

Bit 22 **WUFIE**: Wakeup from Stop mode interrupt enable

This bit is set and cleared by software.

0: Interrupt is inhibited

1: An LPUART interrupt is generated whenever WUF=1 in the LPUART_ISR register

Note: WUFIE must be set before entering in Stop mode.

The WUF interrupt is active only in Stop mode.

If the LPUART does not support the wakeup from Stop feature, this bit is reserved and must be kept at reset value.

Bits 21:20 **WUS[1:0]**: Wakeup from Stop mode interrupt flag selection

This bit-field specify the event which activates the WUF (wakeup from Stop mode flag).

00: WUF active on address match (as defined by ADD[7:0] and ADDM7)

01:Reserved.

10: WUF active on Start bit detection

11: WUF active on RXNE.

This bit field can only be written when the LPUART is disabled (UE=0).

Note: If the LPUART does not support the wakeup from Stop feature, this bit is reserved and must be kept at reset value.

Bits 19:16 Reserved, must be kept at reset value.

Bit 15 **DEP**: Driver enable polarity selection

0: DE signal is active high.

1: DE signal is active low.

This bit can only be written when the LPUART is disabled (UE=0).

Bit 14 **DEM**: Driver enable mode

This bit allows the user to activate the external transceiver control, through the DE signal.

0: DE function is disabled.

1: DE function is enabled. The DE signal is output on the RTS pin.

This bit can only be written when the LPUART is disabled (UE=0).

Bit 13 **DDRE**: DMA Disable on Reception Error

0: DMA is not disabled in case of reception error. The corresponding error flag is set but RXNE is kept 0 preventing from overrun. As a consequence, the DMA request is not asserted, so the erroneous data is not transferred (no DMA request), but next correct received data will be transferred.

1: DMA is disabled following a reception error. The corresponding error flag is set, as well as RXNE. The DMA request is masked until the error flag is cleared. This means that the software must first disable the DMA request (DMAR = 0) or clear RXNE before clearing the error flag.

This bit can only be written when the LPUART is disabled (UE=0).

Note: The reception errors are: parity error, framing error or noise error.

Bit 12 **OVRDIS**: Overrun Disable

This bit is used to disable the receive overrun detection.

0: Overrun Error Flag, ORE, is set when received data is not read before receiving new data.

1: Overrun functionality is disabled. If new data is received while the RXNE flag is still set the ORE flag is not set and the new received data overwrites the previous content of the LPUART_RDR register.

This bit can only be written when the LPUART is disabled (UE=0).

Note: This control bit allows checking the communication flow without reading the data.

Bit 11 Reserved, must be kept at reset value.

Bit 10 **CTSIE**: CTS interrupt enable

0: Interrupt is inhibited

1: An interrupt is generated whenever CTSIF=1 in the LPUART_ISR register

Bit 9 **CTSE**: CTS enable

0: CTS hardware flow control disabled

1: CTS mode enabled, data is only transmitted when the CTS input is asserted (tied to 0). If the CTS input is de-asserted while data is being transmitted, then the transmission is completed before stopping. If data is written into the data register while CTS is de-asserted, the transmission is postponed until CTS is asserted.

This bit can only be written when the LPUART is disabled (UE=0)

Bit 8 **RTSE**: RTS enable

0: RTS hardware flow control disabled

1: RTS output enabled, data is only requested when there is space in the receive buffer. The transmission of data is expected to cease after the current character has been transmitted. The RTS output is asserted (pulled to 0) when data can be received.

This bit can only be written when the LPUART is disabled (UE=0).

Bit 7 **DMAT**: DMA enable transmitter

This bit is set/reset by software

1: DMA mode is enabled for transmission

0: DMA mode is disabled for transmission

Bit 6 **DMAR**: DMA enable receiver

This bit is set/reset by software

1: DMA mode is enabled for reception

0: DMA mode is disabled for reception

Bits 5:4 Reserved, must be kept at reset value.

Bit 3 **HDSEL**: Half-duplex selection
Selection of Single-wire Half-duplex mode
0: Half duplex mode is not selected
1: Half duplex mode is selected
This bit can only be written when the LPUART is disabled (UE=0).

Bits 2:1 Reserved, must be kept at reset value.

Bit 0 **EIE**: Error interrupt enable
Error Interrupt Enable Bit is required to enable interrupt generation in case of a framing error, overrun error or noise flag (FE=1 or ORE=1 or NF=1 in the LPUART_ISR register).
0: Interrupt is inhibited
1: An interrupt is generated when FE=1 or ORE=1 or NF=1 in the LPUART_ISR register.

41.7.4 Baud rate register (LPUART_BRR)

This register can only be written when the LPUART is disabled (UE=0).

Address offset: 0x0C

Reset value: 0x0000

31	30	29	28	27	26	25	24	23	22	21	20	19	18	17	16
Res.	Res.	Res.	Res.	Res.	Res.	Res.	Res.	Res.	Res.	Res.	Res.	BRR[19:16]			
												rw	rw	rw	rw

15	14	13	12	11	10	9	8	7	6	5	4	3	2	1	0
BRR[15:0]															
rw	rw	rw	rw	rw	rw	rw	rw	rw	rw	rw	rw	rw	rw	rw	rw

Bits 31:20 Reserved, must be kept at reset value.

Bits 19:0 **BRR[19:0]**

Note: It is forbidden to write values less than 0x300 in the LPUART_BRR register.

Provided that LPUARTx_BRR must be > = 0x300 and LPUART_BRR is 20-bit, a care should be taken when generating high baud rates using high fck values. fck must be in the range [3 x baud rate,.4096 x baud rate].

41.7.5 Request register (LPUART_RQR)

Address offset: 0x18

Reset value: 0x0000

31	30	29	28	27	26	25	24	23	22	21	20	19	18	17	16
Res.	Res.	Res.	Res.	Res.	Res.	Res.	Res.	Res.	Res.	Res.	Res.	Res.	Res.	Res.	Res.

15	14	13	12	11	10	9	8	7	6	5	4	3	2	1	0
Res.	Res.	Res.	Res.	Res.	Res.	Res.	Res.	Res.	Res.	Res.	Res.	RXFRQ	MMRQ	SBKRQ	Res.
												w	w	w	

Bits 31:4 Reserved, must be kept at reset value

Bit 3 **RXFRQ**: Receive data flush request

Writing 1 to this bit clears the RXNE flag.

This allows to discard the received data without reading it, and avoid an overrun condition.

Bit 2 **MMRQ**: Mute mode request

Writing 1 to this bit puts the LPUART in mute mode and resets the RWU flag.

Bit 1 **SBKRQ**: Send break request

Writing 1 to this bit sets the SBKF flag and request to send a BREAK on the line, as soon as the transmit machine is available.

Note: In the case the application needs to send the break character following all previously inserted data, including the ones not yet transmitted, the software should wait for the TXE flag assertion before setting the SBKRQ bit.

Bit 0 Reserved, must be kept at reset value

41.7.6 Interrupt & status register (LPUART_ISR)

Address offset: 0x1C

Reset value: 0x00C0

31	30	29	28	27	26	25	24	23	22	21	20	19	18	17	16
Res.	Res.	Res.	Res.	Res.	Res.	Res.	Res.	Res.	RE ACK	TE ACK	WUF	RWU	SBKF	CMF	BUSY
									r	r	r	r	r	r	r
15	14	13	12	11	10	9	8	7	6	5	4	3	2	1	0
Res.	Res.	Res.	Res.	Res.	CTS	CTSIF	Res.	TXE	TC	RXNE	IDLE	ORE	NF	FE	PE
					r	r		r	r	r	r	r	r	r	r

Bits 31:23 Reserved, must be kept at reset value.

Bit 22 **REACK**: Receive enable acknowledge flag

This bit is set/reset by hardware, when the Receive Enable value is taken into account by the LPUART.

It can be used to verify that the LPUART is ready for reception before entering Stop mode.

Note: If the LPUART does not support the wakeup from Stop feature, this bit is reserved and kept at reset value.

Bit 21 **TEACK**: Transmit enable acknowledge flag

This bit is set/reset by hardware, when the Transmit Enable value is taken into account by the LPUART.

It can be used when an idle frame request is generated by writing TE=0, followed by TE=1 in the LPUART_CR1 register, in order to respect the TE=0 minimum period.

Bit 20 **WUF**: Wakeup from Stop mode flag

This bit is set by hardware, when a wakeup event is detected. The event is defined by the WUS bit field. It is cleared by software, writing a 1 to the WUCF in the LPUART_ICR register.

An interrupt is generated if WUFIE=1 in the LPUART_CR3 register.

Note: When UESM is cleared, WUF flag is also cleared.

The WUF interrupt is active only in Stop mode.

If the LPUART does not support the wakeup from Stop feature, this bit is reserved and kept at reset value.

Bit 19 **RWU**: *Receiver wakeup from Mute mode*

This bit indicates if the LPUART is in mute mode. It is cleared/set by hardware when a wakeup/mute sequence is recognized. The mute mode control sequence (address or IDLE) is selected by the WAKE bit in the LPUART_CR1 register.

When wakeup on IDLE mode is selected, this bit can only be set by software, writing 1 to the MMRQ bit in the LPUART_RQR register.

0: Receiver in active mode

1: Receiver in mute mode

Bit 18 **SBKF**: Send break flag

This bit indicates that a send break character was requested. It is set by software, by writing 1 to the SBKRQ bit in the LPUART_CR3 register. It is automatically reset by hardware during the stop bit of break transmission.

0: No break character is transmitted

1: Break character will be transmitted

Bit 17 **CMF**: Character match flag

This bit is set by hardware, when the character defined by ADD[7:0] is received. It is cleared by software, writing 1 to the CMCF in the LPUART_ICR register.

An interrupt is generated if CMIE=1in the LPUART_CR1 register.

0: No Character match detected

1: Character Match detected

Bit 16 **BUSY**: Busy flag

This bit is set and reset by hardware. It is active when a communication is ongoing on the RX line (successful start bit detected). It is reset at the end of the reception (successful or not).

0: LPUART is idle (no reception)

1: Reception on going

Bits 15:11 Reserved, must be kept at reset value.

Bit 10 **CTS**: CTS flag

This bit is set/reset by hardware. It is an inverted copy of the status of the CTS input pin.

0: CTS line set

1: CTS line reset

Note: If the hardware flow control feature is not supported, this bit is reserved and kept at reset value.

Bit 9 **CTSIF**: CTS interrupt flag

This bit is set by hardware when the CTS input toggles, if the CTSE bit is set. It is cleared by software, by writing 1 to the CTSCF bit in the LPUART_ICR register.

An interrupt is generated if CTSIE=1 in the LPUART_CR3 register.

0: No change occurred on the CTS status line

1: A change occurred on the CTS status line

Note: If the hardware flow control feature is not supported, this bit is reserved and kept at reset value.

Bit 8 Reserved, must be kept at reset value.

Bit 7 **TXE**: Transmit data register empty

This bit is set by hardware when the content of the LPUART_TDR register has been transferred into the shift register. It is cleared by a write to the LPUART_TDR register.

An interrupt is generated if the TXEIE bit =1 in the LPUART_CR1 register.

0: data is not transferred to the shift register

1: data is transferred to the shift register)

Note: This bit is used during single buffer transmission.

Bit 6 **TC**: Transmission complete

This bit is set by hardware if the transmission of a frame containing data is complete and if TXE is set. An interrupt is generated if TCIE=1 in the LPUART_CR1 register. It is cleared by software, writing 1 to the TCCF in the LPUART_ICR register or by a write to the LPUART_TDR register.

An interrupt is generated if TCIE=1 in the LPUART_CR1 register.

0: Transmission is not complete

1: Transmission is complete

Note: If TE bit is reset and no transmission is on going, the TC bit will be set immediately.

Bit 5 **RXNE**: Read data register not empty

This bit is set by hardware when the content of the RDR shift register has been transferred to the LPUART_RDR register. It is cleared by a read to the LPUART_RDR register. The RXNE flag can also be cleared by writing 1 to the RXFRQ in the LPUART_RQR register.

An interrupt is generated if RXNEIE=1 in the LPUART_CR1 register.

0: data is not received

1: Received data is ready to be read.

Bit 4 **IDLE**: Idle line detected

This bit is set by hardware when an Idle Line is detected. An interrupt is generated if IDLEIE=1 in the LPUART_CR1 register. It is cleared by software, writing 1 to the IDLECF in the LPUART_ICR register.

0: No Idle line is detected

1: Idle line is detected

Note: The IDLE bit will not be set again until the RXNE bit has been set (i.e. a new idle line occurs).

If mute mode is enabled (MME=1), IDLE is set if the LPUART is not mute (RWU=0), whatever the mute mode selected by the WAKE bit. If RWU=1, IDLE is not set.

Bit 3 **ORE**: Overrun error

This bit is set by hardware when the data currently being received in the shift register is ready to be transferred into the RDR register while RXNE=1. It is cleared by a software, writing 1 to the ORECF, in the LPUART_ICR register.

An interrupt is generated if RXNEIE=1 or EIE = 1 in the LPUART_CR1 register.

0: No overrun error

1: Overrun error is detected

Note: When this bit is set, the RDR register content is not lost but the shift register is overwritten. An interrupt is generated if the ORE flag is set during multibuffer communication if the EIE bit is set.

This bit is permanently forced to 0 (no overrun detection) when the OVRDIS bit is set in the LPUART_CR3 register.

Bit 2 **NF**: START bit Noise detection flag

This bit is set by hardware when noise is detected on the START bit of a received frame. It is cleared by software, writing 1 to the NFCF bit in the LPUART_ICR register.

0: No noise is detected

1: Noise is detected

Note: This bit does not generate an interrupt as it appears at the same time as the RXNE bit which itself generates an interrupt. An interrupt is generated when the NF flag is set during multibuffer communication if the EIE bit is set.

Bit 1 **FE**: Framing error

This bit is set by hardware when a de-synchronization, excessive noise or a break character is detected. It is cleared by software, writing 1 to the FECF bit in the LPUART_ICR register.

An interrupt is generated if EIE = 1 in the LPUART_CR1 register.

0: No Framing error is detected

1: Framing error or break character is detected

Bit 0 **PE**: Parity error

This bit is set by hardware when a parity error occurs in receiver mode. It is cleared by software, writing 1 to the PECF in the LPUART_ICR register.

An interrupt is generated if PEIE = 1 in the LPUART_CR1 register.

0: No parity error

1: Parity error

41.7.7 Interrupt flag clear register (LPUART_ICR)

Address offset: 0x20

Reset value: 0x0000

31	30	29	28	27	26	25	24	23	22	21	20	19	18	17	16
Res.	Res.	Res.	Res.	Res.	Res.	Res.	Res.	Res.	Res.	Res.	WUCF	Res.	Res.	CMCF	Res.
											w			w	

15	14	13	12	11	10	9	8	7	6	5	4	3	2	1	0
Res.	Res.	Res.	Res.	Res.	Res.	CTSCF	Res.	Res.	TCCF	Res.	IDLECF	ORECF	NCF	FECF	PECF
						w			w		w	w	w	w	w

Bits 31:21 Reserved, must be kept at reset value.

Bit 20 **WUCF**: Wakeup from Stop mode clear flag

Writing 1 to this bit clears the WUF flag in the LPUART_ISR register.

Note: If the LPUART does not support the wakeup from Stop feature, this bit is reserved and kept at reset value.

Bits 19:18 Reserved, must be kept at reset value.

Bit 17 **CMCF**: Character match clear flag

Writing 1 to this bit clears the CMF flag in the LPUART_ISR register.

Bits 16:10 Reserved, must be kept at reset value.

Bit 9 **CTSCF**: CTS clear flag

Writing 1 to this bit clears the CTSIF flag in the LPUART_ISR register.

Bits 8:7 Reserved, must be kept at reset value.

Bit 6 **TCCF**: Transmission complete clear flag
Writing 1 to this bit clears the TC flag in the LPUART_ISR register.

Bit 5 Reserved, must be kept at reset value.

Bit 4 **IDLECF**: Idle line detected clear flag
Writing 1 to this bit clears the IDLE flag in the LPUART_ISR register.

Bit 3 **ORECF**: Overrun error clear flag
Writing 1 to this bit clears the ORE flag in the LPUART_ISR register.

Bit 2 **NCF**: Noise detected clear flag
Writing 1 to this bit clears the NF flag in the LPUART_ISR register.

Bit 1 **FECF**: Framing error clear flag
Writing 1 to this bit clears the FE flag in the LPUART_ISR register.

Bit 0 **PECF**: Parity error clear flag
Writing 1 to this bit clears the PE flag in the LPUART_ISR register.

41.7.8 Receive data register (LPUART_RDR)

Address offset: 0x24

Reset value: Undefined

31	30	29	28	27	26	25	24	23	22	21	20	19	18	17	16
Res.	Res.	Res.	Res.	Res.	Res.	Res.	Res.	Res.	Res.	Res.	Res.	Res.	Res.	Res.	Res.

15	14	13	12	11	10	9	8	7	6	5	4	3	2	1	0
Res.	Res.	Res.	Res.	Res.	Res.	Res.	RDR[8:0]								
							r	r	r	r	r	r	r	r	r

Bits 31:9 Reserved, must be kept at reset value.

Bits 8:0 **RDR[8:0]**: Receive data value
Contains the received data character.
The RDR register provides the parallel interface between the input shift register and the internal bus (see *Figure 418*).
When receiving with the parity enabled, the value read in the MSB bit is the received parity bit.

41.7.9 Transmit data register (LPUART_TDR)

Address offset: 0x28

Reset value: Undefined

31	30	29	28	27	26	25	24	23	22	21	20	19	18	17	16
Res.	Res.	Res.	Res.	Res.	Res.	Res.	Res.	Res.	Res.	Res.	Res.	Res.	Res.	Res.	Res.

15	14	13	12	11	10	9	8	7	6	5	4	3	2	1	0
Res.	Res.	Res.	Res.	Res.	Res.	Res.	TDR[8:0]								
							rw	rw	rw	rw	rw	rw	rw	rw	rw

Bits 31:9 Reserved, must be kept at reset value.

Bits 8:0 **TDR[8:0]**: Transmit data value

Contains the data character to be transmitted.

The TDR register provides the parallel interface between the internal bus and the output shift register (see *Figure 418*).

When transmitting with the parity enabled (PCE bit set to 1 in the LPUART_CR1 register), the value written in the MSB (bit 7 or bit 8 depending on the data length) has no effect because it is replaced by the parity.

Note: This register must be written only when TXE=1.

41.7.10 LPUART register map

The table below gives the LPUART register map and reset values.

Table 261. LPUART register map and reset values

Offset	Register	31	30	29	28	27	26	25	24	23	22	21	20	19	18	17	16	15	14	13	12	11	10	9	8	7	6	5	4	3	2	1	0
0x00	LPUART_CR1	Res.	Res.	Res.	M1	Res.	Res.	DEAT4	DEAT3	DEAT2	DEAT1	DEAT0	DEDT4	DEDT3	DEDT2	DEDT1	DEDT0	Res.	CMIE	MME	M	WAKE	PCE	PS	PEIE	TXEIE	TCIE	RXNEIE	IDLEIE	TE	RE	UESM	UE
	Reset value				0			0	0	0	0	0	0	0	0	0	0		0	0	0	0	0	0	0	0	0	0	0	0	0	0	0
0x04	LPUART_CR2	ADD[7:4]				ADD[3:0]				Res.	Res.	Res.	Res.	MSBFIRST	DATAINV	TXINV	RXINV	SWAP	Res.	STOP [1:0]		Res.	Res.	Res.	Res.	Res.	Res.	Res.	ADDM7	Res.	Res.	Res.	Res.
	Reset value	0	0	0	0	0	0	0	0					0	0	0	0	0		0	0								0				
0x08	LPUART_CR3	Res.	Res.	Res.	Res.	Res.	Res.	Res.	Res.	UCESM	WUFIE	WUS [1:0]		Res.	Res.	Res.	Res.	DEP	DEM	DDRE	OVRDIS	Res.	CTSIE	CTSE	RTSE	DMAT	DMAR	Res.	Res.	HDSEL	Res.	Res.	EIE
	Reset value									0	0	0	0					0	0	0	0		0	0	0	0	0			0			0
0x0C	LPUART_BRR	Res.	Res.	Res.	Res.	Res.	Res.	Res.	Res.	Res.	Res.	Res.	Res.	BRR[19:0]																			
	Reset value																		0	0	0	0	0	0	0	0	0	0	0	0	0	0	0
0x10-0x14	Reserved																																
0x18	LPUART_RQR	Res.	Res.	Res.	Res.	Res.	Res.	Res.	Res.	Res.	Res.	Res.	Res.	Res.	Res.	Res.	Res.	Res.	Res.	Res.	Res.	Res.	Res.	Res.	Res.	Res.	Res.	Res.	Res.	RXFRQ	MMRQ	SBKRQ	Res.
	Reset value																													0	0	0	
0x1C	LPUART_ISR	Res.	Res.	Res.	Res.	Res.	Res.	Res.	Res.	Res.	REACK	TEACK	WUF	RWU	SBKF	CMF	BUSY	Res.	Res.	Res.	Res.	Res.	CTS	CTSIF	Res.	TXE	TC	RXNE	IDLE	ORE	NF	FE	PE
	Reset value										0	0	0	0	0	0	0						0	0		1	1	0	0	0	0	0	0
0x20	LPUART_ICR	Res.	Res.	Res.	Res.	Res.	Res.	Res.	Res.	Res.	Res.	Res.	WUCF	Res.	Res.	CMCF	Res.	Res.	Res.	Res.	Res.	Res.	Res.	CTSCF	Res.	Res.	TCCF	Res.	Res.	ORECF	NCF	FECF	PECF
	Reset value												0			0								0			0			0	0	0	0
0x24	LPUART_RDR	Res.	Res.	Res.	Res.	Res.	Res.	Res.	Res.	Res.	Res.	Res.	Res.	Res.	Res.	Res.	Res.	Res.	Res.	Res.	Res.	Res.	Res.	Res.	RDR[8:0]								
	Reset value																								X	X	X	X	X	X	X	X	X
0x28	LPUART_TDR	Res.	Res.	Res.	Res.	Res.	Res.	Res.	Res.	Res.	Res.	Res.	Res.	Res.	Res.	Res.	Res.	Res.	Res.	Res.	Res.	Res.	Res.	Res.	TDR[8:0]								
	Reset value																								X	X	X	X	X	X	X	X	X

Refer to *Section 2.2 on page 75* for the register boundary addresses.

42 Serial peripheral interface (SPI)

42.1 Introduction

The SPI interface can be used to communicate with external devices using the SPI protocol. SPI mode is selectable by software. SPI Motorola mode is selected by default after a device reset.

The serial peripheral interface (SPI) protocol supports half-duplex, full-duplex and simplex synchronous, serial communication with external devices. The interface can be configured as master and in this case it provides the communication clock (SCK) to the external slave device. The interface is also capable of operating in multimaster configuration.

42.2 SPI main features

- Master or slave operation
- Full-duplex synchronous transfers on three lines
- Half-duplex synchronous transfer on two lines (with bidirectional data line)
- Simplex synchronous transfers on two lines (with unidirectional data line)
- 4 to 16-bit data size selection
- Multimaster mode capability
- 8 master mode baud rate prescalers up to $f_{PCLK}/2$
- Slave mode frequency up to $f_{PCLK}/2$.
- NSS management by hardware or software for both master and slave: dynamic change of master/slave operations
- Programmable clock polarity and phase
- Programmable data order with MSB-first or LSB-first shifting
- Dedicated transmission and reception flags with interrupt capability
- SPI bus busy status flag
- SPI Motorola support
- Hardware CRC feature for reliable communication:
  - CRC value can be transmitted as last byte in Tx mode
  - Automatic CRC error checking for last received byte
- Master mode fault, overrun flags with interrupt capability
- CRC Error flag
- Two 32-bit embedded Rx and Tx FIFOs with DMA capability
- Enhanced TI and NSS pulse modes support

42.3 SPI implementation

The following table describes all the SPI instances and their features embedded in the devices.

Table 262. STM32L47x/L48x/L49x/L4Ax SPI implementation

SPI Features	SPI1	SPI2	SPI3
Enhanced NSSP & TI modes	Yes	Yes	Yes
Hardware CRC calculation	Yes	Yes	Yes
Data size configurable	from 4 to 16-bit	from 4 to 16-bit	from 4 to 16-bit
Rx/Tx FIFO size	32-bit	32-bit	32-bit
Wakeup capability from Low-power Sleep	Yes	Yes	Yes

Table 263. STM32L47x/L48x/L49x/L4Ax SPI implementation

SPI Features	SPI1	SPI2	SPI3
Enhanced NSSP & TI modes	Yes	Yes	Yes
Hardware CRC calculation	Yes	Yes	Yes
Data size configurable	from 4 to 16-bit	from 4 to 16-bit	from 4 to 16-bit
Rx/Tx FIFO size	32-bit	32-bit	32-bit
Wakeup capability from Low-power Sleep	Yes	Yes	Yes

42.4 SPI functional description

42.4.1 General description

The SPI allows synchronous, serial communication between the MCU and external devices. Application software can manage the communication by polling the status flag or using dedicated SPI interrupt. The main elements of SPI and their interactions are shown in the following block diagram *Figure 455*.

Figure 455. SPI block diagram

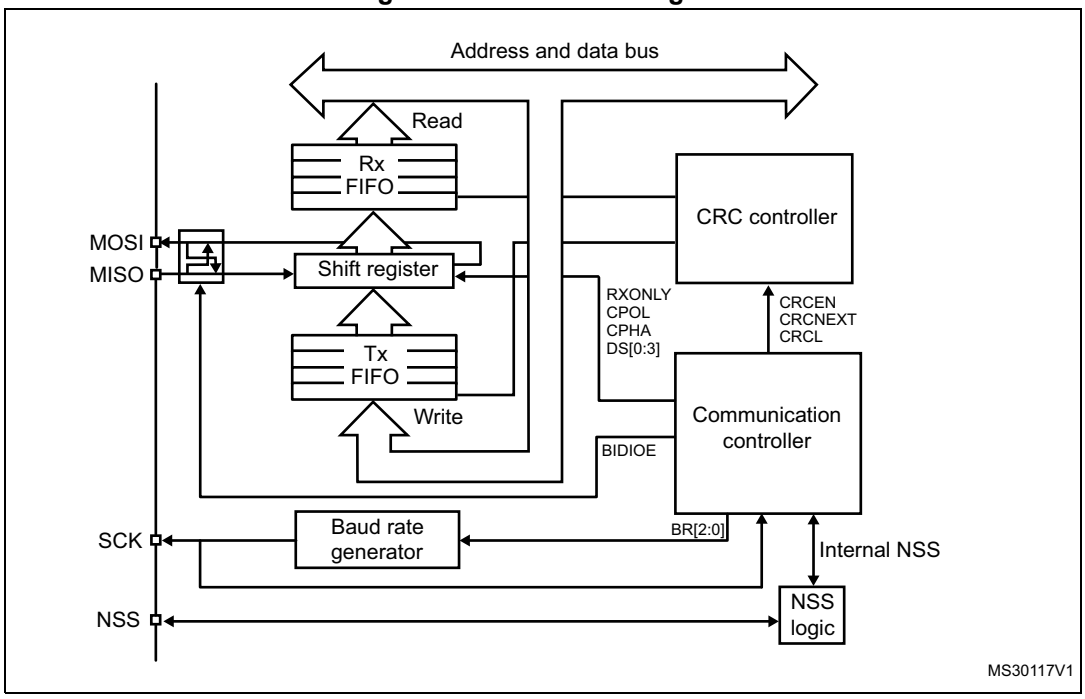

Four I/O pins are dedicated to SPI communication with external devices.

- **MISO:** Master In / Slave Out data. In the general case, this pin is used to transmit data in slave mode and receive data in master mode.
- **MOSI:** Master Out / Slave In data. In the general case, this pin is used to transmit data in master mode and receive data in slave mode.
- **SCK:** Serial Clock output pin for SPI masters and input pin for SPI slaves.
- **NSS:** Slave select pin. Depending on the SPI and NSS settings, this pin can be used to either:
  - select an individual slave device for communication
  - synchronize the data frame or
  - detect a conflict between multiple masters

  See *Section 42.4.5: Slave select (NSS) pin management* for details.

The SPI bus allows the communication between one master device and one or more slave devices. The bus consists of at least two wires - one for the clock signal and the other for synchronous data transfer. Other signals can be added depending on the data exchange between SPI nodes and their slave select signal management.

42.4.2 Communications between one master and one slave

The SPI allows the MCU to communicate using different configurations, depending on the device targeted and the application requirements. These configurations use 2 or 3 wires (with software NSS management) or 3 or 4 wires (with hardware NSS management). Communication is always initiated by the master.

Full-duplex communication

By default, the SPI is configured for full-duplex communication. In this configuration, the shift registers of the master and slave are linked using two unidirectional lines between the MOSI and the MISO pins. During SPI communication, data is shifted synchronously on the SCK clock edges provided by the master. The master transmits the data to be sent to the slave via the MOSI line and receives data from the slave via the MISO line. When the data frame transfer is complete (all the bits are shifted) the information between the master and slave is exchanged.

Figure 456. Full-duplex single master/ single slave application

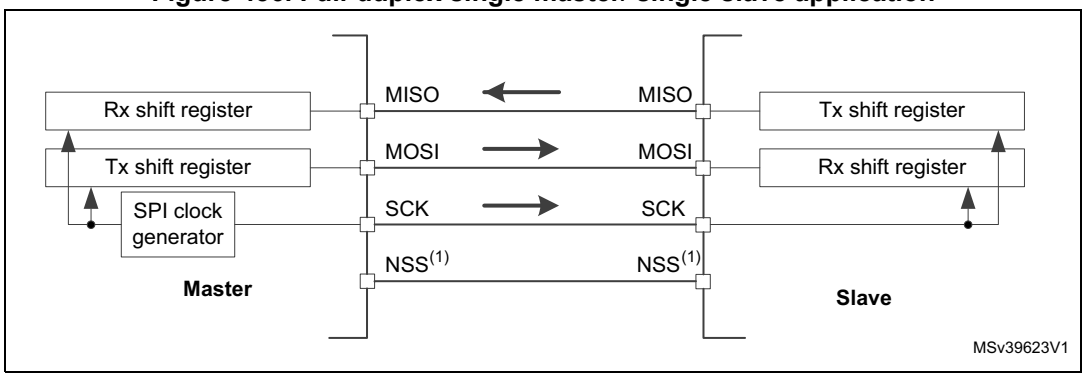

1. The NSS pins can be used to provide a hardware control flow between master and slave. Optionally, the pins can be left unused by the peripheral. Then the flow has to be handled internally for both master and slave. For more details see *Section 42.4.5: Slave select (NSS) pin management*.

Half-duplex communication

The SPI can communicate in half-duplex mode by setting the BIDIMODE bit in the SPIx_CR1 register. In this configuration, one single cross connection line is used to link the shift registers of the master and slave together. During this communication, the data is synchronously shifted between the shift registers on the SCK clock edge in the transfer direction selected reciprocally by both master and slave with the BDIOE bit in their SPIx_CR1 registers. In this configuration, the master's MISO pin and the slave's MOSI pin are free for other application uses and act as GPIOs.

Figure 457. Half-duplex single master/ single slave application

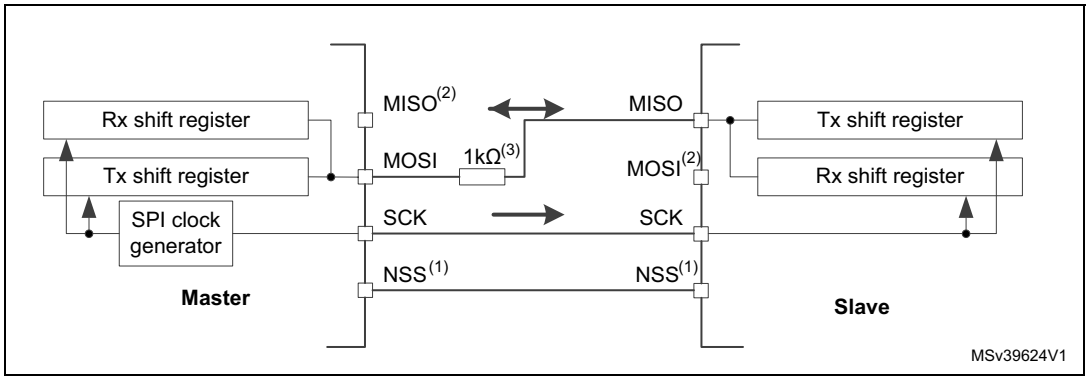

1. The NSS pins can be used to provide a hardware control flow between master and slave. Optionally, the pins can be left unused by the peripheral. Then the flow has to be handled internally for both master and slave. For more details see *Section 42.4.5: Slave select (NSS) pin management*.
2. In this configuration, the master's MISO pin and the slave's MOSI pin can be used as GPIOs.
3. A critical situation can happen when communication direction is changed not synchronously between two

nodes working at bidirectionnal mode and new transmitter accesses the common data line while former transmitter still keeps an opposite value on the line (the value depends on SPI configuration and communication data). Both nodes then fight while providing opposite output levels on the common line temporary till next node changes its direction settings correspondingly, too. It is suggested to insert a serial resistance between MISO and MOSI pins at this mode to protect the outputs and limit the current blowing between them at this situation.

Simplex communications

The SPI can communicate in simplex mode by setting the SPI in transmit-only or in receive-only using the RXONLY bit in the SPIx_CR2 register. In this configuration, only one line is used for the transfer between the shift registers of the master and slave. The remaining MISO and MOSI pins pair is not used for communication and can be used as standard GPIOs.

- **Transmit-only mode (RXONLY=0):** The configuration settings are the same as for full-duplex. The application has to ignore the information captured on the unused input pin. This pin can be used as a standard GPIO.
- **Receive-only mode (RXONLY=1)**: The application can disable the SPI output function by setting the RXONLY bit. In slave configuration, the MISO output is disabled and the pin can be used as a GPIO. The slave continues to receive data from the MOSI pin while its slave select signal is active (see *42.4.5: Slave select (NSS) pin management*). Received data events appear depending on the data buffer configuration. In the master configuration, the MOSI output is disabled and the pin can be used as a GPIO. The clock signal is generated continuously as long as the SPI is enabled. The only way to stop the clock is to clear the RXONLY bit or the SPE bit and wait until the incoming pattern from the MISO pin is finished and fills the data buffer structure, depending on its configuration.

Figure 458. Simplex single master/single slave application (master in transmit-only/ slave in receive-only mode)

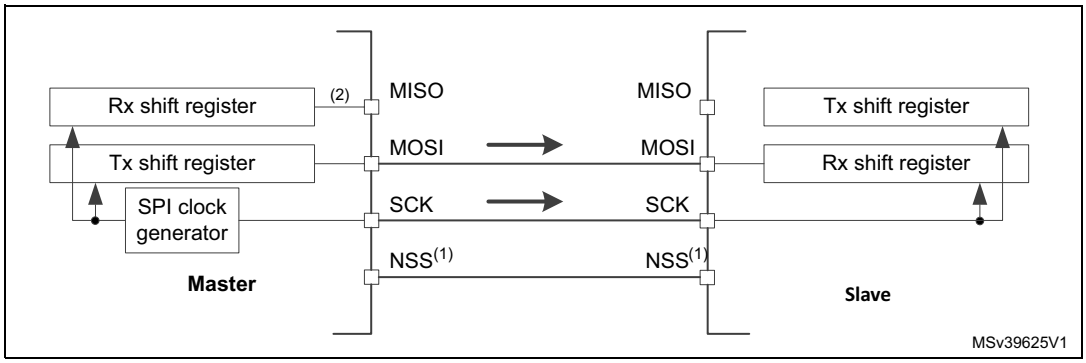

1. The NSS pins can be used to provide a hardware control flow between master and slave. Optionally, the pins can be left unused by the peripheral. Then the flow has to be handled internally for both master and slave. For more details see *Section 42.4.5: Slave select (NSS) pin management*.
2. An accidental input information is captured at the input of transmitter Rx shift register. All the events associated with the transmitter receive flow must be ignored in standard transmit only mode (e.g. OVF flag).
3. In this configuration, both the MISO pins can be used as GPIOs.

Note: Any simplex communication can be alternatively replaced by a variant of the half-duplex communication with a constant setting of the transaction direction (bidirectional mode is enabled while BDIO bit is not changed).

42.4.3 Standard multi-slave communication

In a configuration with two or more independent slaves, the master uses GPIO pins to manage the chip select lines for each slave (see *Figure 459.*). The master must select one of the slaves individually by pulling low the GPIO connected to the slave NSS input. When this is done, a standard master and dedicated slave communication is established.

Figure 459. Master and three independent slaves

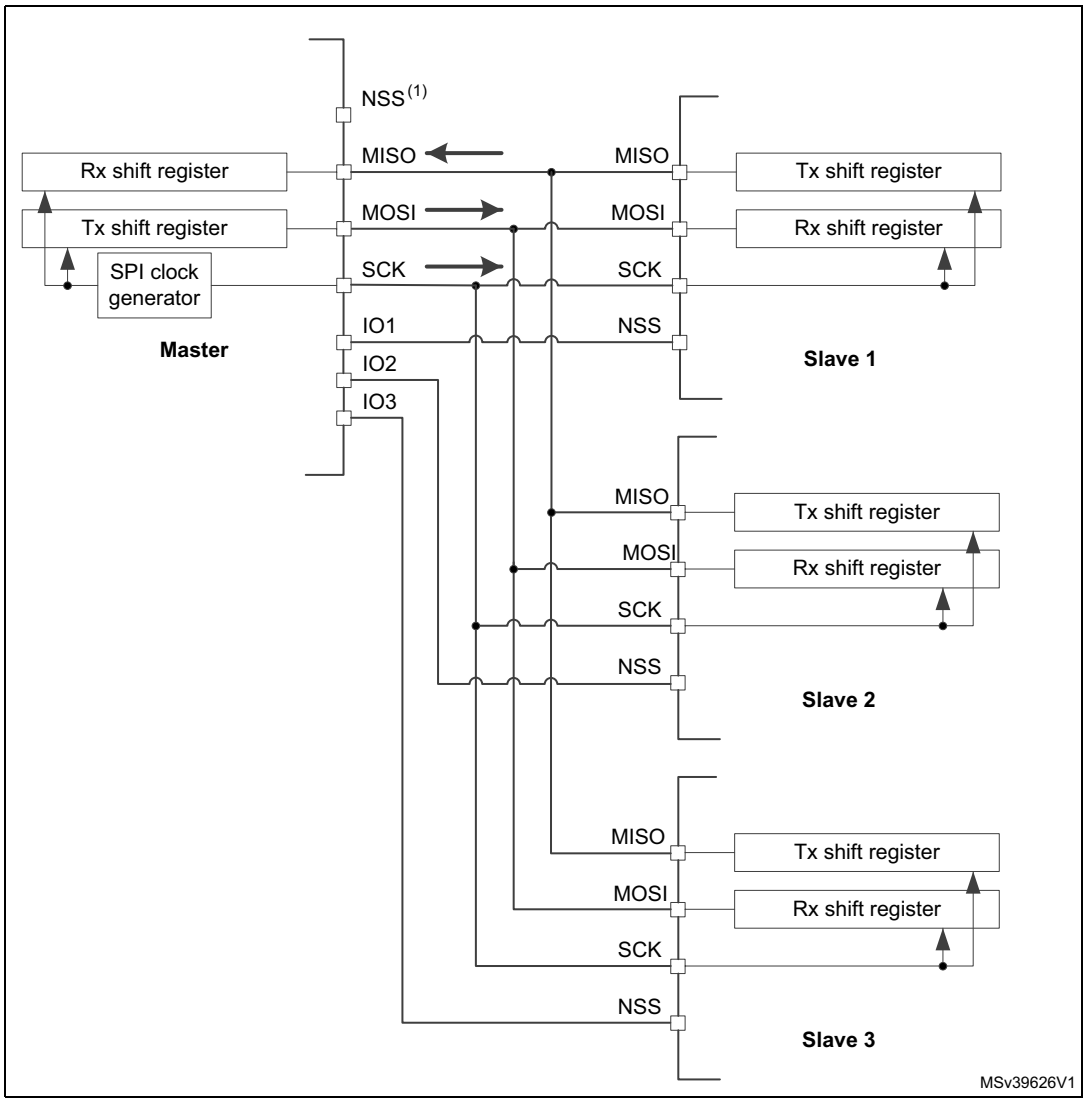

1. NSS pin is not used on master side at this configuration. It has to be managed internally (SSM=1, SSI=1) to prevent any MODF error.
2. As MISO pins of the slaves are connected together, all slaves must have the GPIO configuration of their MISO pin set as alternate function open-drain (see I/O alternate function input/output section (GPIO)).

42.4.4 Multi-master communication

Unless SPI bus is not designed for a multi-master capability primarily, the user can use build in feature which detects a potential conflict between two nodes trying to master the bus at the same time. For this detection, NSS pin is used configured at hardware input mode.

The connection of more than two SPI nodes working at this mode is impossible as only one node can apply its output on a common data line at time.

When nodes are non active, both stay at slave mode by default. Once one node wants to overtake control on the bus, it switches itself into master mode and applies active level on the slave select input of the other node via dedicated GPIO pin. After the session is completed, the active slave select signal is released and the node mastering the bus temporary returns back to passive slave mode waiting for next session start.

If potentially both nodes raised their mastering request at the same time a bus conflict event appears (see mode fault MODF event). Then the user can apply some simple arbitration process (e.g. to postpone next attempt by predefined different time-outs applied at both nodes).

Figure 460. Multi-master application

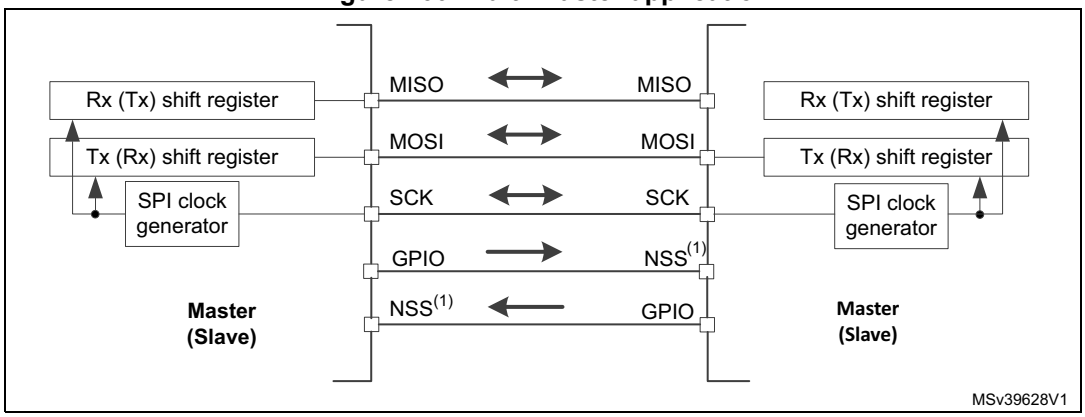

1. The NSS pin is configured at hardware input mode at both nodes. Its active level enables the MISO line output control as the passive node is configured as a slave.

42.4.5 Slave select (NSS) pin management

In slave mode, the NSS works as a standard “chip select” input and lets the slave communicate with the master. In master mode, NSS can be used either as output or input. As an input it can prevent multimaster bus collision, and as an output it can drive a slave select signal of a single slave.

Hardware or software slave select management can be set using the SSM bit in the SPIx_CR1 register:

- **Software NSS management (SSM = 1)**: in this configuration, slave select information is driven internally by the SSI bit value in register SPIx_CR1. The external NSS pin is free for other application uses.
- **Hardware NSS management (SSM = 0)**: in this case, there are two possible configurations. The configuration used depends on the NSS output configuration (SSOE bit in register SPIx_CR1).
  - **NSS output enable (SSM=0,SSOE = 1)**: this configuration is only used when the MCU is set as master. The NSS pin is managed by the hardware. The NSS signal is driven low as soon as the SPI is enabled in master mode (SPE=1), and is kept low until the SPI is disabled (SPE =0). A pulse can be generated between

continuous communications if NSS pulse mode is activated (NSSP=1). The SPI cannot work in multimaster configuration with this NSS setting.

– **NSS output disable (SSM=0, SSOE = 0)**: if the microcontroller is acting as the master on the bus, this configuration allows multimaster capability. If the NSS pin is pulled low in this mode, the SPI enters master mode fault state and the device is automatically reconfigured in slave mode. In slave mode, the NSS pin works as a standard “chip select” input and the slave is selected while NSS line is at low level.

Figure 461. Hardware/software slave select management

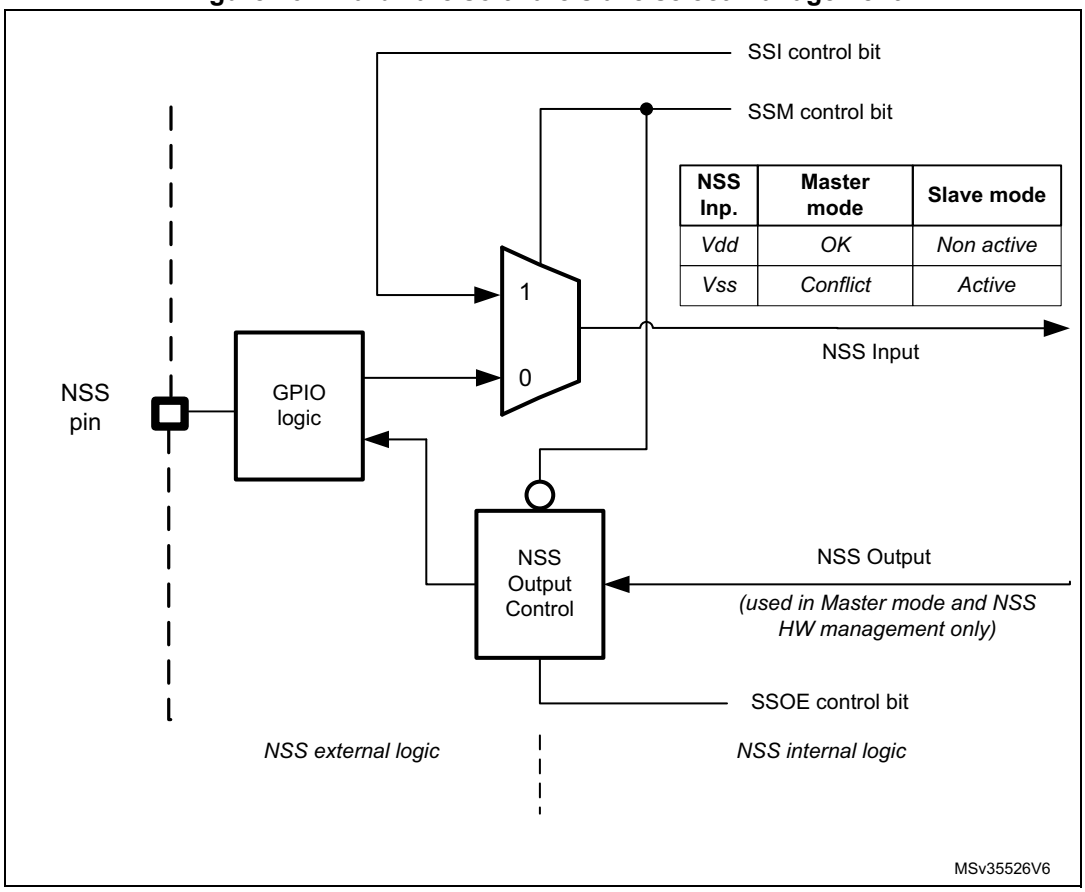

42.4.6 Communication formats

During SPI communication, receive and transmit operations are performed simultaneously. The serial clock (SCK) synchronizes the shifting and sampling of the information on the data lines. The communication format depends on the clock phase, the clock polarity and the data frame format. To be able to communicate together, the master and slaves devices must follow the same communication format.

Clock phase and polarity controls

Four possible timing relationships may be chosen by software, using the CPOL and CPHA bits in the SPIx_CR1 register. The CPOL (clock polarity) bit controls the idle state value of the clock when no data is being transferred. This bit affects both master and slave modes. If CPOL is reset, the SCK pin has a low-level idle state. If CPOL is set, the SCK pin has a high-level idle state.

If the CPHA bit is set, the second edge on the SCK pin captures the first data bit transacted (falling edge if the CPOL bit is reset, rising edge if the CPOL bit is set). Data are latched on each occurrence of this clock transition type. If the CPHA bit is reset, the first edge on the SCK pin captures the first data bit transacted (falling edge if the CPOL bit is set, rising edge if the CPOL bit is reset). Data are latched on each occurrence of this clock transition type.

The combination of CPOL (clock polarity) and CPHA (clock phase) bits selects the data capture clock edge.

Figure 462, shows an SPI full-duplex transfer with the four combinations of the CPHA and CPOL bits.

Note: Prior to changing the CPOL/CPHA bits the SPI must be disabled by resetting the SPE bit.

The idle state of SCK must correspond to the polarity selected in the SPIx_CR1 register (by pulling up SCK if CPOL=1 or pulling down SCK if CPOL=0).

Figure 462. Data clock timing diagram

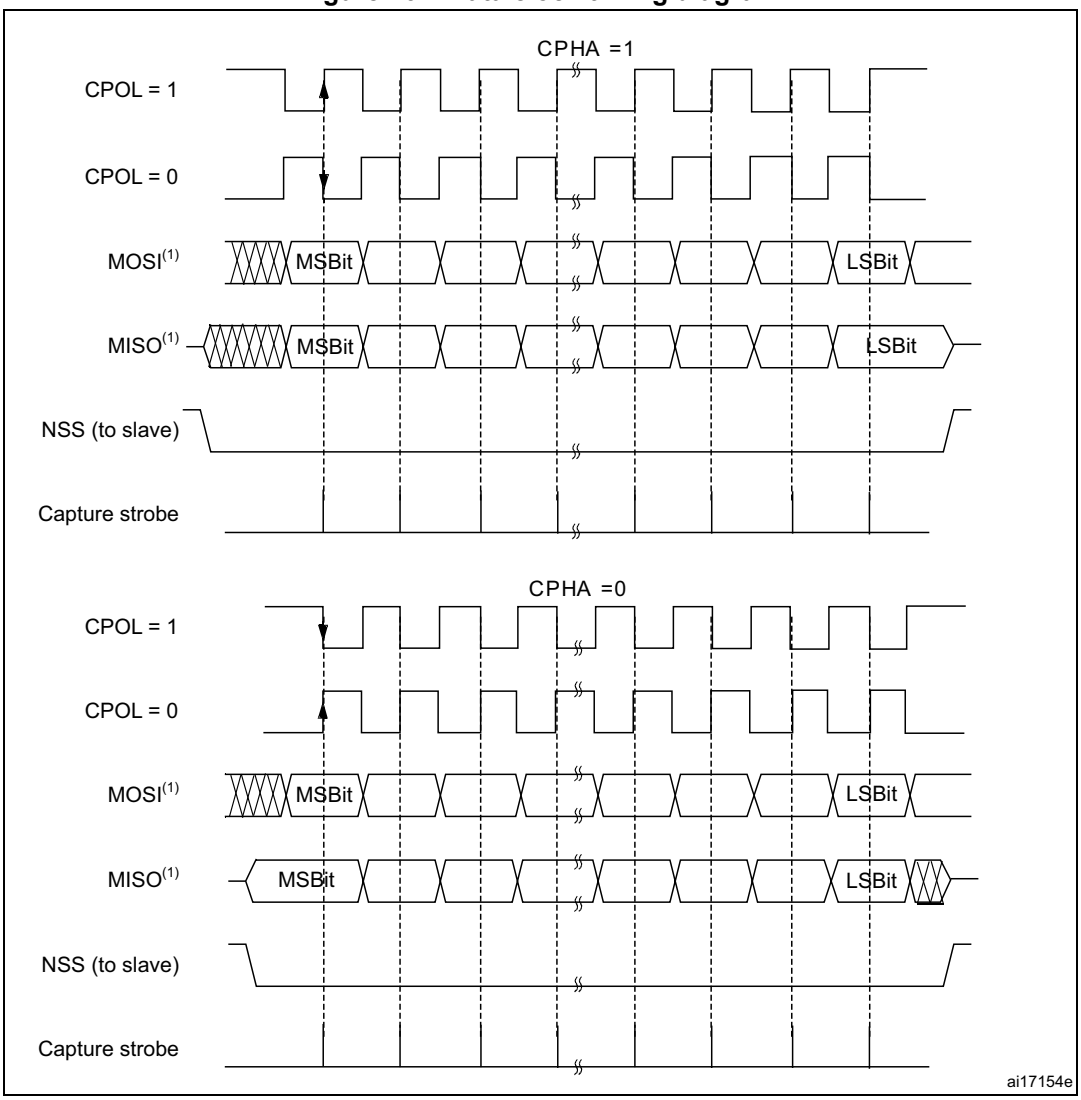

1. The order of data bits depends on LSBFIRST bit setting.

Data frame format

The SPI shift register can be set up to shift out MSB-first or LSB-first, depending on the value of the LSBFIRST bit. The data frame size is chosen by using the DS bits. It can be set from 4-bit up to 16-bit length and the setting applies for both transmission and reception. Whatever the selected data frame size, read access to the FIFO must be aligned with the FRXTH level. When the SPIx_DR register is accessed, data frames are always right-aligned into either a byte (if the data fits into a byte) or a half-word (see *Figure 463*). During communication, only bits within the data frame are clocked and transferred.

Figure 463. Data alignment when data length is not equal to 8-bit or 16-bit

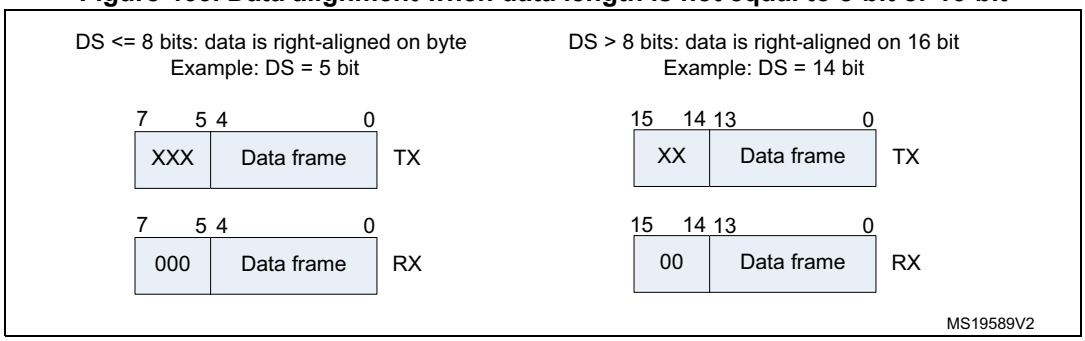

Note: The minimum data length is 4 bits. If a data length of less than 4 bits is selected, it is forced to an 8-bit data frame size.

42.4.7 Configuration of SPI

The configuration procedure is almost the same for master and slave. For specific mode setups, follow the dedicated sections. When a standard communication is to be initialized, perform these steps:

1. Write proper GPIO registers: Configure GPIO for MOSI, MISO and SCK pins.
2. Write to the SPI_CR1 register:
   a) Configure the serial clock baud rate using the BR[2:0] bits (Note: 4).
   b) Configure the CPOL and CPHA bits combination to define one of the four relationships between the data transfer and the serial clock (CPHA must be cleared in NSSP mode). (Note: 2 - except the case when CRC is enabled at TI mode).
   c) Select simplex or half-duplex mode by configuring RXONLY or BIDIMODE and BIDIOE (RXONLY and BIDIMODE can't be set at the same time).
   d) Configure the LSBFIRST bit to define the frame format (Note: 2).
   e) Configure the CRCL and CRCEN bits if CRC is needed (while SCK clock signal is at idle state).
   f) Configure SSM and SSI (Notes: 2 & 3).
   g) Configure the MSTR bit (in multimaster NSS configuration, avoid conflict state on

NSS if master is configured to prevent MODF error).

3. Write to SPI_CR2 register:
   a) Configure the DS[3:0] bits to select the data length for the transfer.
   b) Configure SSOE (Notes: 1 & 2 & 3).
   c) Set the FRF bit if the TI protocol is required (keep NSSP bit cleared in TI mode).
   d) Set the NSSP bit if the NSS pulse mode between two data units is required (keep CHPA and TI bits cleared in NSSP mode).
   e) Configure the FRXTH bit. The RXFIFO threshold must be aligned to the read access size for the SPIx_DR register.
   f) Initialize LDMA_TX and LDMA_RX bits if DMA is used in packed mode.
4. Write to SPI_CRCPR register: Configure the CRC polynomial if needed.
5. Write proper DMA registers: Configure DMA streams dedicated for SPI Tx and Rx in DMA registers if the DMA streams are used.

Note: (1) Step is not required in slave mode.

(2) Step is not required in TI mode.

(3) Step is not required in NSSP mode.

(4) The step is not required in slave mode except slave working at TI mode

42.4.8 Procedure for enabling SPI

It is recommended to enable the SPI slave before the master sends the clock. If not, undesired data transmission might occur. The data register of the slave must already contain data to be sent before starting communication with the master (either on the first edge of the communication clock, or before the end of the ongoing communication if the clock signal is continuous). The SCK signal must be settled at an idle state level corresponding to the selected polarity before the SPI slave is enabled.

The master at full-duplex (or in any transmit-only mode) starts to communicate when the SPI is enabled and TXFIFO is not empty, or with the next write to TXFIFO.

In any master receive only mode (RXONLY=1 or BIDIMODE=1 & BIDIOE=0), master starts to communicate and the clock starts running immediately after SPI is enabled.

For handling DMA, follow the dedicated section.

42.4.9 Data transmission and reception procedures

RXFIFO and TXFIFO

All SPI data transactions pass through the 32-bit embedded FIFOs. This enables the SPI to work in a continuous flow, and prevents overruns when the data frame size is short. Each direction has its own FIFO called TXFIFO and RXFIFO. These FIFOs are used in all SPI modes except for receiver-only mode (slave or master) with CRC calculation enabled (see *Section 42.4.14: CRC calculation*).

The handling of FIFOs depends on the data exchange mode (duplex, simplex), data frame format (number of bits in the frame), access size performed on the FIFO data registers (8-bit or 16-bit), and whether or not data packing is used when accessing the FIFOs (see *Section 42.4.13: TI mode*).

A read access to the SPIx_DR register returns the oldest value stored in RXFIFO that has not been read yet. A write access to the SPIx_DR stores the written data in the TXFIFO at the end of a send queue. The read access must be always aligned with the RXFIFO threshold configured by the FRXTH bit in SPIx_CR2 register. FTLVL[1:0] and FRLVL[1:0] bits indicate the current occupancy level of both FIFOs.

A read access to the SPIx_DR register must be managed by the RXNE event. This event is triggered when data is stored in RXFIFO and the threshold (defined by FRXTH bit) is reached. When RXNE is cleared, RXFIFO is considered to be empty. In a similar way, write access of a data frame to be transmitted is managed by the TXE event. This event is triggered when the TXFIFO level is less than or equal to half of its capacity. Otherwise TXE is cleared and the TXFIFO is considered as full. In this way, RXFIFO can store up to four data frames, whereas TXFIFO can only store up to three when the data frame format is not greater than 8 bits. This difference prevents possible corruption of 3x 8-bit data frames already stored in the TXFIFO when software tries to write more data in 16-bit mode into TXFIFO. Both TXE and RXNE events can be polled or handled by interrupts. See *Figure 465* through *Figure 468*.

Another way to manage the data exchange is to use DMA (see *Communication using DMA (direct memory addressing)*).

If the next data is received when the RXFIFO is full, an overrun event occurs (see description of OVR flag at *Section 42.4.10: SPI status flags*). An overrun event can be polled or handled by an interrupt.

The BSY bit being set indicates ongoing transaction of a current data frame. When the clock signal runs continuously, the BSY flag stays set between data frames at master but becomes low for a minimum duration of one SPI clock at slave between each data frame transfer.

Sequence handling

A few data frames can be passed at single sequence to complete a message. When transmission is enabled, a sequence begins and continues while any data is present in the TXFIFO of the master. The clock signal is provided continuously by the master until TXFIFO becomes empty, then it stops waiting for additional data.

In receive-only modes, half-duplex (BIDIMODE=1, BIDIOE=0) or simplex (BIDIMODE=0, RXONLY=1) the master starts the sequence immediately when both SPI is enabled and receive-only mode is activated. The clock signal is provided by the master and it does not stop until either SPI or receive-only mode is disabled by the master. The master receives data frames continuously up to this moment.

While the master can provide all the transactions in continuous mode (SCK signal is continuous) it has to respect slave capability to handle data flow and its content at anytime. When necessary, the master must slow down the communication and provide either a slower clock or separate frames or data sessions with sufficient delays. Be aware there is no underflow error signal for master or slave in SPI mode, and data from the slave is always transacted and processed by the master even if the slave could not prepare it correctly in time. It is preferable for the slave to use DMA, especially when data frames are shorter and bus rate is high.

Each sequence must be encased by the NSS pulse in parallel with the multislave system to select just one of the slaves for communication. In a single slave system it is not necessary to control the slave with NSS, but it is often better to provide the pulse here too, to

synchronize the slave with the beginning of each data sequence. NSS can be managed by both software and hardware (see *Section 42.4.5: Slave select (NSS) pin management*).

When the BSY bit is set it signifies an ongoing data frame transaction. When the dedicated frame transaction is finished, the RXNE flag is raised. The last bit is just sampled and the complete data frame is stored in the RXFIFO.

Procedure for disabling the SPI

When SPI is disabled, it is mandatory to follow the disable procedures described in this paragraph. It is important to do this before the system enters a low-power mode when the peripheral clock is stopped. Ongoing transactions can be corrupted in this case. In some modes the disable procedure is the only way to stop continuous communication running.

Master in full-duplex or transmit only mode can finish any transaction when it stops providing data for transmission. In this case, the clock stops after the last data transaction. Special care must be taken in packing mode when an odd number of data frames are transacted to prevent some dummy byte exchange (refer to *Data packing* section). Before the SPI is disabled in these modes, the user must follow standard disable procedure. When the SPI is disabled at the master transmitter while a frame transaction is ongoing or next data frame is stored in TXFIFO, the SPI behavior is not guaranteed.

When the master is in any receive only mode, the only way to stop the continuous clock is to disable the peripheral by SPE=0. This must occur in specific time window within last data frame transaction just between the sampling time of its first bit and before its last bit transfer starts (in order to receive a complete number of expected data frames and to prevent any additional “dummy” data reading after the last valid data frame). Specific procedure must be followed when disabling SPI in this mode.

Data received but not read remains stored in RXFIFO when the SPI is disabled, and must be processed the next time the SPI is enabled, before starting a new sequence. To prevent having unread data, ensure that RXFIFO is empty when disabling the SPI, by using the correct disabling procedure, or by initializing all the SPI registers with a software reset via the control of a specific register dedicated to peripheral reset (see the SPIiRST bits in the RCC_APBiRSTR registers).

Standard disable procedure is based on pulling BSY status together with FTLVL[1:0] to check if a transmission session is fully completed. This check can be done in specific cases, too, when it is necessary to identify the end of ongoing transactions, for example:

- When NSS signal is managed by software and master has to provide proper end of NSS pulse for slave, or
- When transactions’ streams from DMA or FIFO are completed while the last data frame or CRC frame transaction is still ongoing in the peripheral bus.

The correct disable procedure is (except when receive only mode is used):

1. Wait until FTLVL[1:0] = 00 (no more data to transmit).
2. Wait until BSY=0 (the last data frame is processed).
3. Disable the SPI (SPE=0).
4. Read data until FRLVL[1:0] = 00 (read all the received data).

The correct disable procedure for certain receive only modes is:

1. Interrupt the receive flow by disabling SPI (SPE=0) in the specific time window while the last data frame is ongoing.
2. Wait until BSY=0 (the last data frame is processed).
3. Read data until FRLVL[1:0] = 00 (read all the received data).

Note: If packing mode is used and an odd number of data frames with a format less than or equal to 8 bits (fitting into one byte) has to be received, FRXTH must be set when FRLVL[1:0] = 01, in order to generate the RXNE event to read the last odd data frame and to keep good FIFO pointer alignment.

Data packing

When the data frame size fits into one byte (less than or equal to 8 bits), data packing is used automatically when any read or write 16-bit access is performed on the SPIx_DR register. The double data frame pattern is handled in parallel in this case. At first, the SPI operates using the pattern stored in the LSB of the accessed word, then with the other half stored in the MSB. *Figure 464* provides an example of data packing mode sequence handling. Two data frames are sent after the single 16-bit access the SPIx_DR register of the transmitter. This sequence can generate just one RXNE event in the receiver if the RXFIFO threshold is set to 16 bits (FRXTH=0). The receiver then has to access both data frames by a single 16-bit read of SPIx_DR as a response to this single RXNE event. The RxFIFO threshold setting and the following read access must be always kept aligned at the receiver side, as data can be lost if it is not in line.

A specific problem appears if an odd number of such “fit into one byte” data frames must be handled. On the transmitter side, writing the last data frame of any odd sequence with an 8-bit access to SPIx_DR is enough. The receiver has to change the Rx_FIFO threshold level for the last data frame received in the odd sequence of frames in order to generate the RXNE event.

Figure 464. Packing data in FIFO for transmission and reception

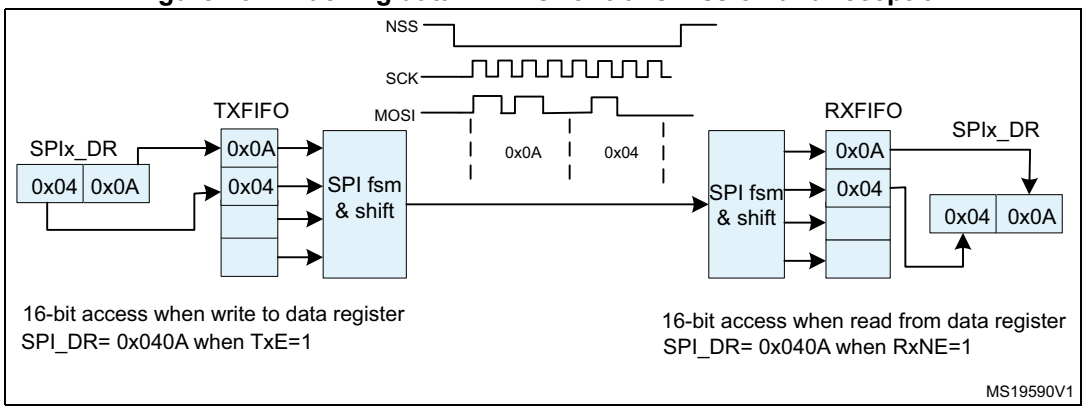

Communication using DMA (direct memory addressing)

To operate at its maximum speed and to facilitate the data register read/write process required to avoid overrun, the SPI features a DMA capability, which implements a simple request/acknowledge protocol.

A DMA access is requested when the TXE or RXNE enable bit in the SPIx_CR2 register is set. Separate requests must be issued to the Tx and Rx buffers.

- In transmission, a DMA request is issued each time TXE is set to 1. The DMA then writes to the SPIx_DR register.
- In reception, a DMA request is issued each time RXNE is set to 1. The DMA then reads the SPIx_DR register.

See *Figure 465* through *Figure 468*.

When the SPI is used only to transmit data, it is possible to enable only the SPI Tx DMA channel. In this case, the OVR flag is set because the data received is not read. When the SPI is used only to receive data, it is possible to enable only the SPI Rx DMA channel.

In transmission mode, when the DMA has written all the data to be transmitted (the TCIF flag is set in the DMA_ISR register), the BSY flag can be monitored to ensure that the SPI communication is complete. This is required to avoid corrupting the last transmission before disabling the SPI or entering the Stop mode. The software must first wait until FTLVL[1:0]=00 and then until BSY=0.

When starting communication using DMA, to prevent DMA channel management raising error events, these steps must be followed in order:

1. Enable DMA Rx buffer in the RXDMAEN bit in the SPI_CR2 register, if DMA Rx is used.
2. Enable DMA streams for Tx and Rx in DMA registers, if the streams are used.
3. Enable DMA Tx buffer in the TXDMAEN bit in the SPI_CR2 register, if DMA Tx is used.
4. Enable the SPI by setting the SPE bit.

To close communication it is mandatory to follow these steps in order:

1. Disable DMA streams for Tx and Rx in the DMA registers, if the streams are used.
2. Disable the SPI by following the SPI disable procedure.
3. Disable DMA Tx and Rx buffers by clearing the TXDMAEN and RXDMAEN bits in the SPI_CR2 register, if DMA Tx and/or DMA Rx are used.

Packing with DMA

If the transfers are managed by DMA (TXDMAEN and RXDMAEN set in the SPIx_CR2 register) packing mode is enabled/disabled automatically depending on the PSIZE value configured for SPI TX and the SPI RX DMA channel. If the DMA channel PSIZE value is equal to 16-bit and SPI data size is less than or equal to 8-bit, then packing mode is enabled. The DMA then automatically manages the write operations to the SPIx_DR register.

If data packing mode is used and the number of data to transfer is not a multiple of two, the LDMA_TX/LDMA_RX bits must be set. The SPI then considers only one data for the transmission or reception to serve the last DMA transfer (for more details refer to *Data packing on page 1463*.)

Communication diagrams

Some typical timing schemes are explained in this section. These schemes are valid no matter if the SPI events are handled by polling, interrupts or DMA. For simplicity, the LSBFIRST=0, CPOL=0 and CPHA=1 setting is used as a common assumption here. No complete configuration of DMA streams is provided.

The following numbered notes are common for *Figure 465 on page 1466* through *Figure 468 on page 1469*.

1. The slave starts to control MISO line as NSS is active and SPI is enabled, and is disconnected from the line when one of them is released. Sufficient time must be provided for the slave to prepare data dedicated to the master in advance before its transaction starts.
   At the master, the SPI peripheral takes control at MOSI and SCK signals (occasionally at NSS signal as well) only if SPI is enabled. If SPI is disabled the SPI peripheral is disconnected from GPIO logic, so the levels at these lines depends on GPIO setting exclusively.
2. At the master, BSY stays active between frames if the communication (clock signal) is continuous. At the slave, BSY signal always goes down for at least one clock cycle between data frames.
3. The TXE signal is cleared only if TXFIFO is full.
4. The DMA arbitration process starts just after the TXDMAEN bit is set. The TXE interrupt is generated just after the TXEIE is set. As the TXE signal is at an active level, data transfers to TxFIFO start, until TxFIFO becomes full or the DMA transfer completes.
5. If all the data to be sent can fit into TxFIFO, the DMA Tx TCIF flag can be raised even before communication on the SPI bus starts. This flag always rises before the SPI transaction is completed.
6. The CRC value for a package is calculated continuously frame by frame in the SPIx_TXCRCR and SPIx_RXCRCR registers. The CRC information is processed after the entire data package has completed, either automatically by DMA (Tx channel must be set to the number of data frames to be processed) or by SW (the user must handle CRCNEXT bit during the last data frame processing).
   While the CRC value calculated in SPIx_TXCRCR is simply sent out by transmitter, received CRC information is loaded into RxFIFO and then compared with the SPIx_RXCRCR register content (CRC error flag can be raised here if any difference). This is why the user must take care to flush this information from the FIFO, either by software reading out all the stored content of RxFIFO, or by DMA when the proper number of data frames is preset for Rx channel (number of data frames + number of CRC frames) (see the settings at the example assumption).
7. In data packed mode, TxE and RxNE events are paired and each read/write access to the FIFO is 16 bits wide until the number of data frames are even. If the TxFIFO is ¾ full FTLVL status stays at FIFO full level. That is why the last odd data frame cannot be stored before the TxFIFO becomes ½ full. This frame is stored into TxFIFO with an 8-bit access either by software or automatically by DMA when LDMA_TX control is set.
8. To receive the last odd data frame in packed mode, the Rx threshold must be changed to 8-bit when the last data frame is processed, either by software setting FRXTH=1 or automatically by a DMA internal signal when LDMA_RX is set.

Figure 465. Master full-duplex communication

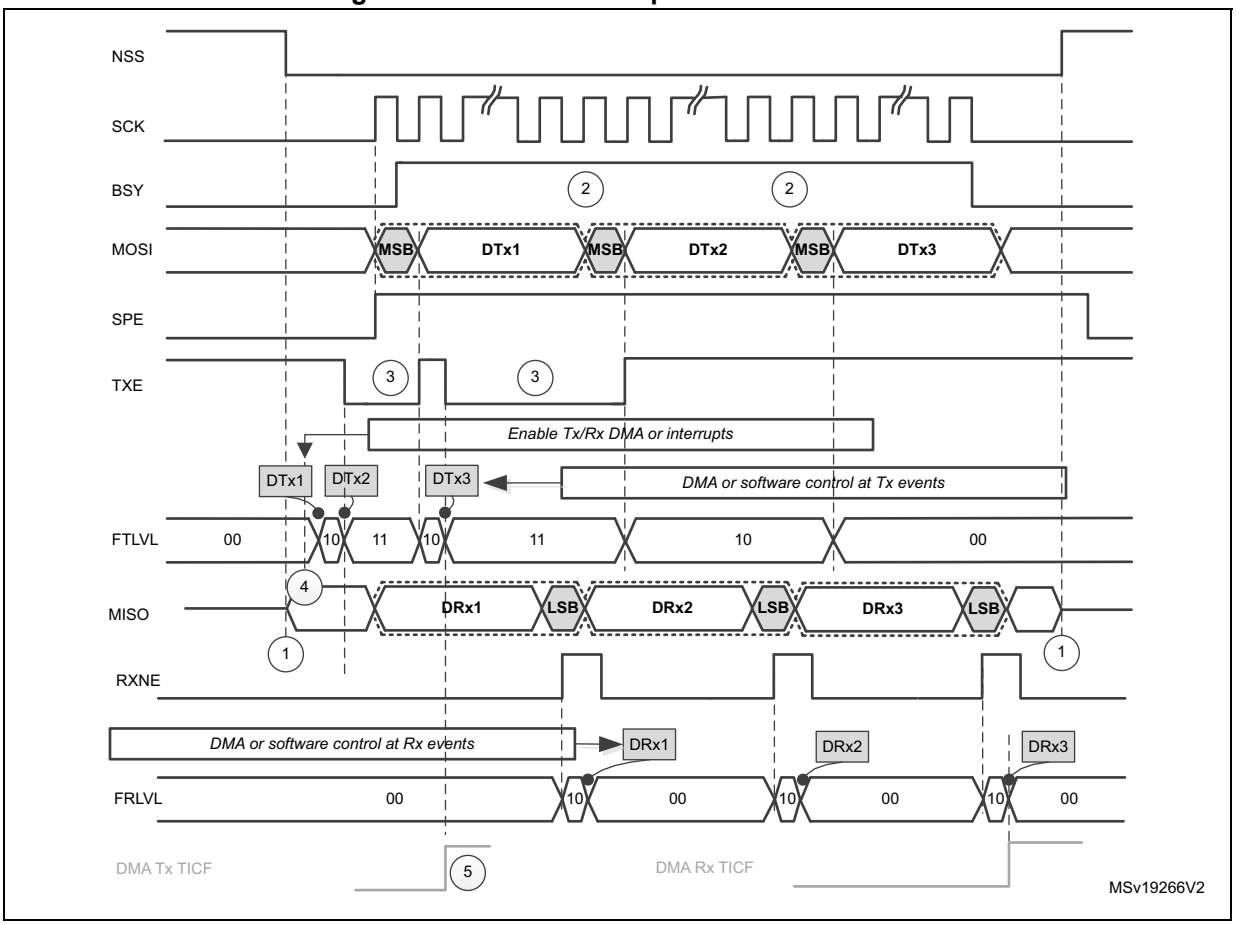

Assumptions for master full-duplex communication example:

- Data size > 8 bit

If DMA is used:

- Number of Tx frames transacted by DMA is set to 3
- Number of Rx frames transacted by DMA is set to 3

See also *: Communication diagrams on page 1465* for details about common assumptions and notes.

Figure 466. Slave full-duplex communication

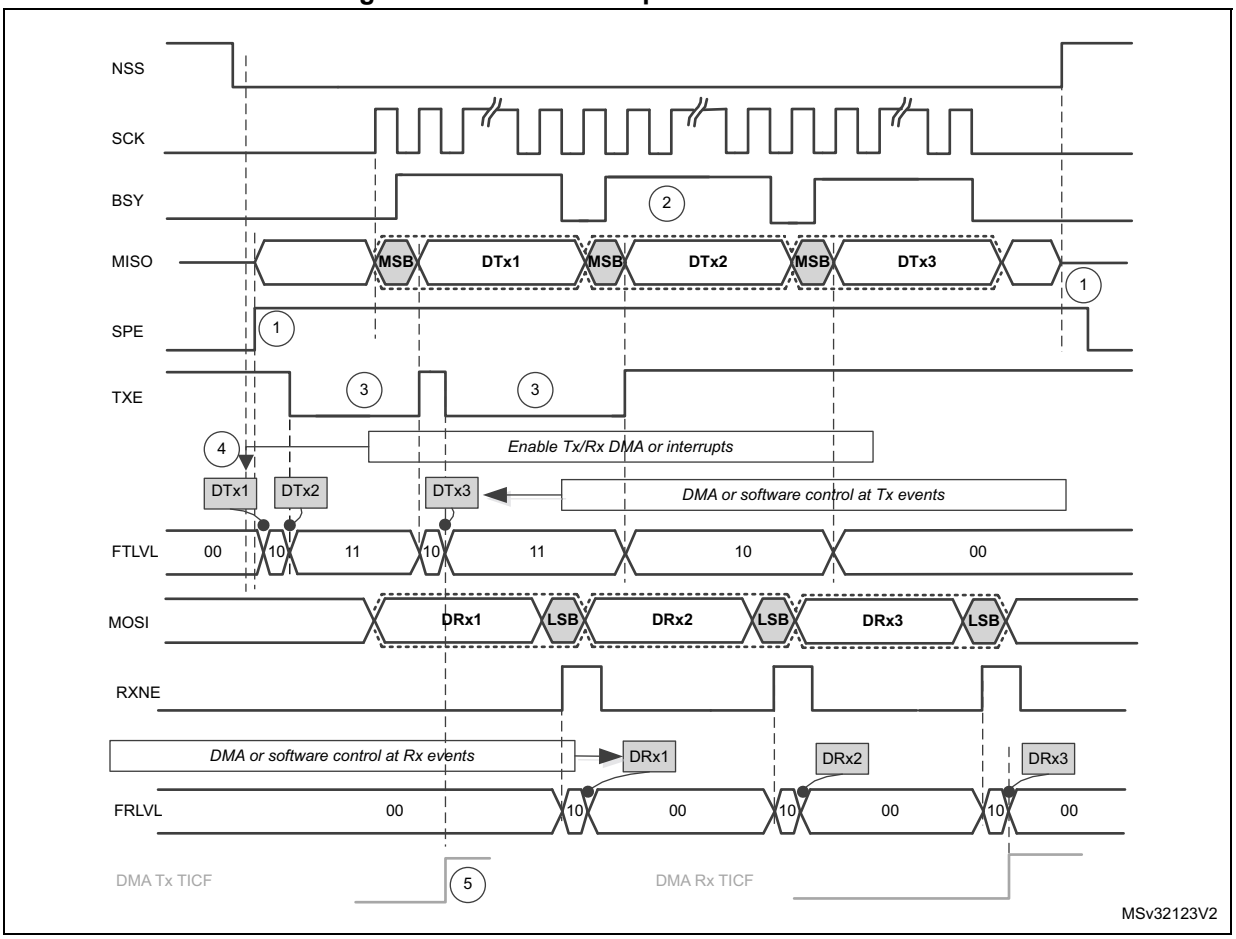

Assumptions for slave full-duplex communication example:

- Data size > 8 bit

If DMA is used:

- Number of Tx frames transacted by DMA is set to 3
- Number of Rx frames transacted by DMA is set to 3

See also *: Communication diagrams on page 1465* for details about common assumptions and notes.

Figure 467. Master full-duplex communication with CRC

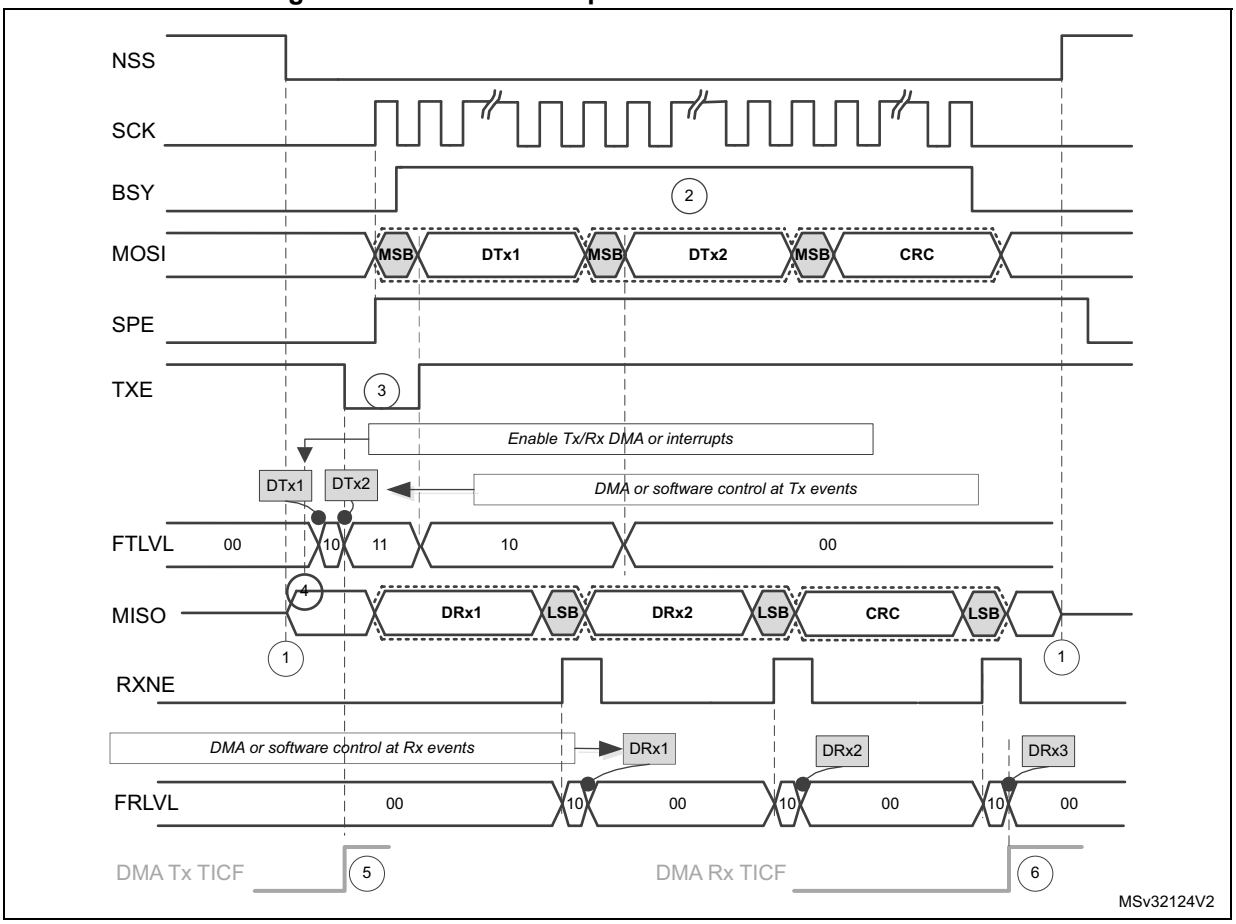

Assumptions for master full-duplex communication with CRC example:

- Data size = 16 bit
- CRC enabled

If DMA is used:

- Number of Tx frames transacted by DMA is set to 2
- Number of Rx frames transacted by DMA is set to 3

See also : *Communication diagrams on page 1465* for details about common assumptions and notes.

Figure 468. Master full-duplex communication in packed mode

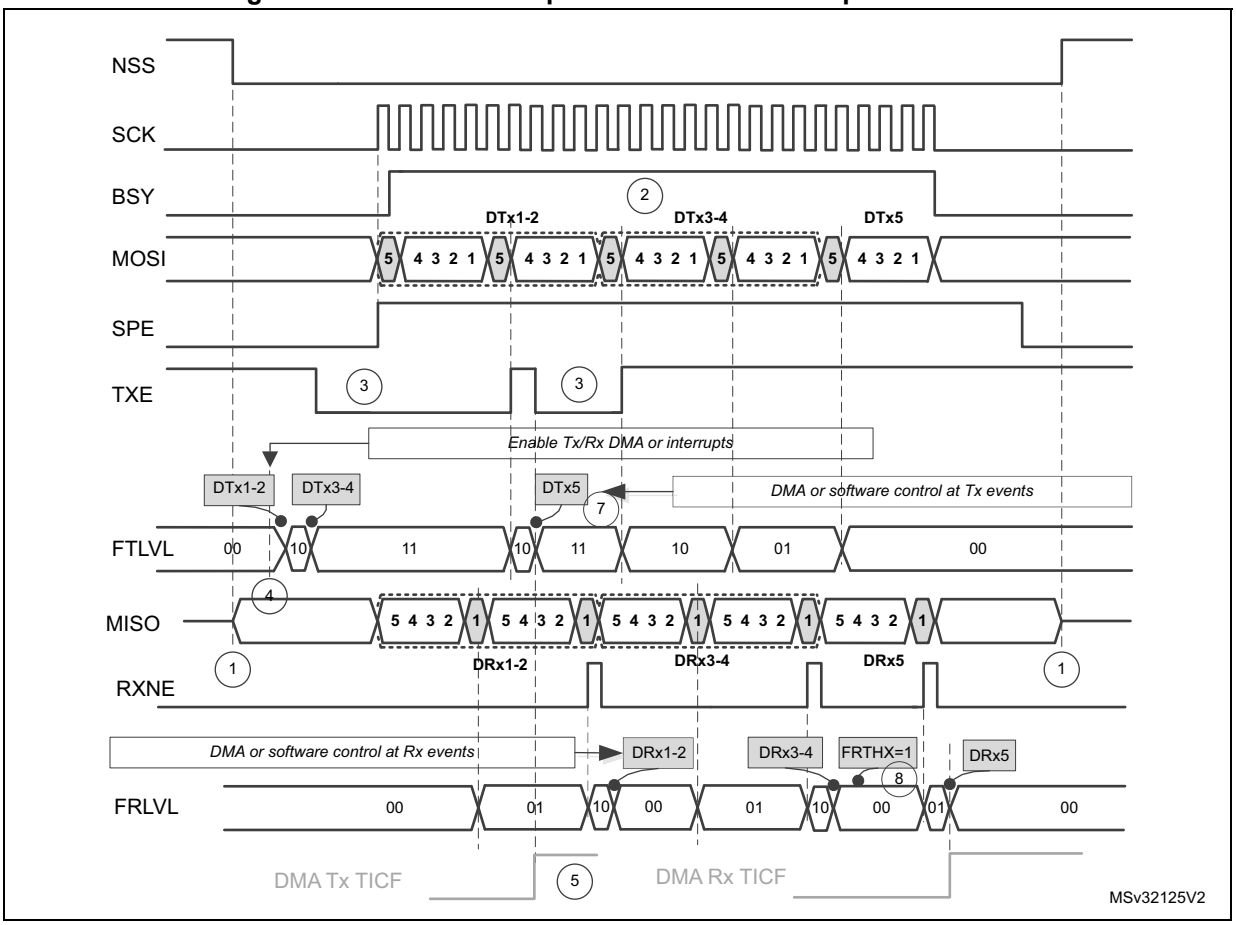

Assumptions for master full-duplex communication in packed mode example:

- Data size = 5 bit
- Read/write FIFO is performed mostly by 16-bit access
- FRXTH=0

If DMA is used:

- Number of Tx frames to be transacted by DMA is set to 3
- Number of Rx frames to be transacted by DMA is set to 3
- PSIZE for both Tx and Rx DMA channel is set to 16-bit
- LDMA_TX=1 and LDMA_RX=1

See also *: Communication diagrams on page 1465* for details about common assumptions and notes.

42.4.10 SPI status flags

Three status flags are provided for the application to completely monitor the state of the SPI bus.

Tx buffer empty flag (TXE)

The TXE flag is set when transmission TXFIFO has enough space to store data to send. TXE flag is linked to the TXFIFO level. The flag goes high and stays high until the TXFIFO level is lower or equal to 1/2 of the FIFO depth. An interrupt can be generated if the TXEIE bit in the SPIx_CR2 register is set. The bit is cleared automatically when the TXFIFO level becomes greater than 1/2.

Rx buffer not empty (RXNE)

The RXNE flag is set depending on the FRXTH bit value in the SPIx_CR2 register:

- If FRXTH is set, RXNE goes high and stays high until the RXFIFO level is greater or equal to 1/4 (8-bit).
- If FRXTH is cleared, RXNE goes high and stays high until the RXFIFO level is greater than or equal to 1/2 (16-bit).

An interrupt can be generated if the RXNEIE bit in the SPIx_CR2 register is set.

The RXNE is cleared by hardware automatically when the above conditions are no longer true.

Busy flag (BSY)

The BSY flag is set and cleared by hardware (writing to this flag has no effect).

When BSY is set, it indicates that a data transfer is in progress on the SPI (the SPI bus is busy).

The BSY flag can be used in certain modes to detect the end of a transfer so that the software can disable the SPI or its peripheral clock before entering a low-power mode which does not provide a clock for the peripheral. This avoids corrupting the last transfer.

The BSY flag is also useful for preventing write collisions in a multimaster system.

The BSY flag is cleared under any one of the following conditions:

- When the SPI is correctly disabled
- When a fault is detected in Master mode (MODF bit set to 1)
- In Master mode, when it finishes a data transmission and no new data is ready to be sent
- In Slave mode, when the BSY flag is set to '0' for at least one SPI clock cycle between each data transfer.

Note: When the next transmission can be handled immediately by the master (e.g. if the master is in Receive-only mode or its Transmit FIFO is not empty), communication is continuous and the BSY flag remains set to '1' between transfers on the master side. Although this is not the case with a slave, it is recommended to use always the TXE and RXNE flags (instead of the BSY flags) to handle data transmission or reception operations.

42.4.11 SPI error flags

An SPI interrupt is generated if one of the following error flags is set and interrupt is enabled by setting the ERRIE bit.

Overrun flag (OVR)

An overrun condition occurs when data is received by a master or slave and the RXFIFO has not enough space to store this received data. This can happen if the software or the DMA did not have enough time to read the previously received data (stored in the RXFIFO) or when space for data storage is limited e.g. the RXFIFO is not available when CRC is enabled in receive only mode so in this case the reception buffer is limited into a single data frame buffer (see *Section 42.4.14: CRC calculation*).

When an overrun condition occurs, the newly received value does not overwrite the previous one in the RXFIFO. The newly received value is discarded and all data transmitted subsequently is lost. Clearing the OVR bit is done by a read access to the SPI_DR register followed by a read access to the SPI_SR register.

Mode fault (MODF)

Mode fault occurs when the master device has its internal NSS signal (NSS pin in NSS hardware mode, or SSI bit in NSS software mode) pulled low. This automatically sets the MODF bit. Master mode fault affects the SPI interface in the following ways:

- The MODF bit is set and an SPI interrupt is generated if the ERRIE bit is set.
- The SPE bit is cleared. This blocks all output from the device and disables the SPI interface.
- The MSTR bit is cleared, thus forcing the device into slave mode.

Use the following software sequence to clear the MODF bit:

1. Make a read or write access to the SPIx_SR register while the MODF bit is set.
2. Then write to the SPIx_CR1 register.

To avoid any multiple slave conflicts in a system comprising several MCUs, the NSS pin must be pulled high during the MODF bit clearing sequence. The SPE and MSTR bits can be restored to their original state after this clearing sequence. As a security, hardware does not allow the SPE and MSTR bits to be set while the MODF bit is set. In a slave device the MODF bit cannot be set except as the result of a previous multimaster conflict.

CRC error (CRCERR)

This flag is used to verify the validity of the value received when the CRCEN bit in the SPIx_CR1 register is set. The CRCERR flag in the SPIx_SR register is set if the value received in the shift register does not match the receiver SPIx_RXCRCR value. The flag is cleared by the software.

TI mode frame format error (FRE)

A TI mode frame format error is detected when an NSS pulse occurs during an ongoing communication when the SPI is operating in slave mode and configured to conform to the TI mode protocol. When this error occurs, the FRE flag is set in the SPIx_SR register. The SPI is not disabled when an error occurs, the NSS pulse is ignored, and the SPI waits for the next NSS pulse before starting a new transfer. The data may be corrupted since the error detection may result in the loss of two data bytes.

The FRE flag is cleared when SPIx_SR register is read. If the ERRIE bit is set, an interrupt is generated on the NSS error detection. In this case, the SPI should be disabled because data consistency is no longer guaranteed and communications should be reinitiated by the master when the slave SPI is enabled again.

42.4.12 NSS pulse mode

This mode is activated by the NSSP bit in the SPIx_CR2 register and it takes effect only if the SPI interface is configured as Motorola SPI master (FRF=0) with capture on the first edge (SPIx_CR1 CPHA = 0, CPOL setting is ignored). When activated, an NSS pulse is generated between two consecutive data frame transfers when NSS stays at high level for the duration of one clock period at least. This mode allows the slave to latch data. NSSP pulse mode is designed for applications with a single master-slave pair.

Figure 469 illustrates NSS pin management when NSSP pulse mode is enabled.

Figure 469. NSSP pulse generation in Motorola SPI master mode

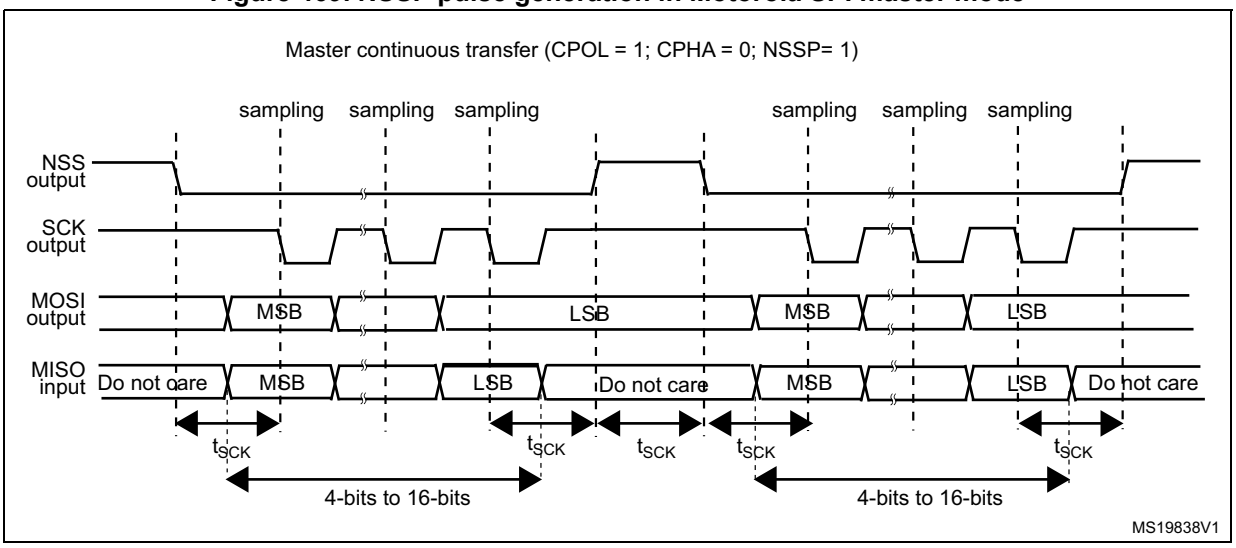

Note: Similar behavior is encountered when CPOL = 0. In this case the sampling edge is the *rising* edge of SCK, and NSS assertion and deassertion refer to this sampling edge.

42.4.13 TI mode

TI protocol in master mode

The SPI interface is compatible with the TI protocol. The FRF bit of the SPIx_CR2 register can be used to configure the SPI to be compliant with this protocol.

The clock polarity and phase are forced to conform to the TI protocol requirements whatever the values set in the SPIx_CR1 register. NSS management is also specific to the TI protocol which makes the configuration of NSS management through the SPIx_CR1 and SPIx_CR2 registers (SSM, SSI, SSOE) impossible in this case.

In slave mode, the SPI baud rate prescaler is used to control the moment when the MISO pin state changes to HiZ when the current transaction finishes (see *Figure 470*). Any baud rate can be used, making it possible to determine this moment with optimal flexibility. However, the baud rate is generally set to the external master clock baud rate. The delay for the MISO signal to become HiZ ($t_{release}$) depends on internal resynchronization and on the

baud rate value set in through the BR[2:0] bits in the SPIx_CR1 register. It is given by the formula:

$$\frac{t_{baud_rate}}{2} + 4 \times t_{pclk} < t_{release} < \frac{t_{baud_rate}}{2} + 6 \times t_{pclk}$$

If the slave detects a misplaced NSS pulse during a data frame transaction the TIFRE flag is set.

If the data size is equal to 4-bits or 5-bits, the master in full-duplex mode or transmit-only mode uses a protocol with one more dummy data bit added after LSB. TI NSS pulse is generated above this dummy bit clock cycle instead of the LSB in each period.

This feature is not available for Motorola SPI communications (FRF bit set to 0).

Figure 470: TI mode transfer shows the SPI communication waveforms when TI mode is selected.

Figure 470. TI mode transfer

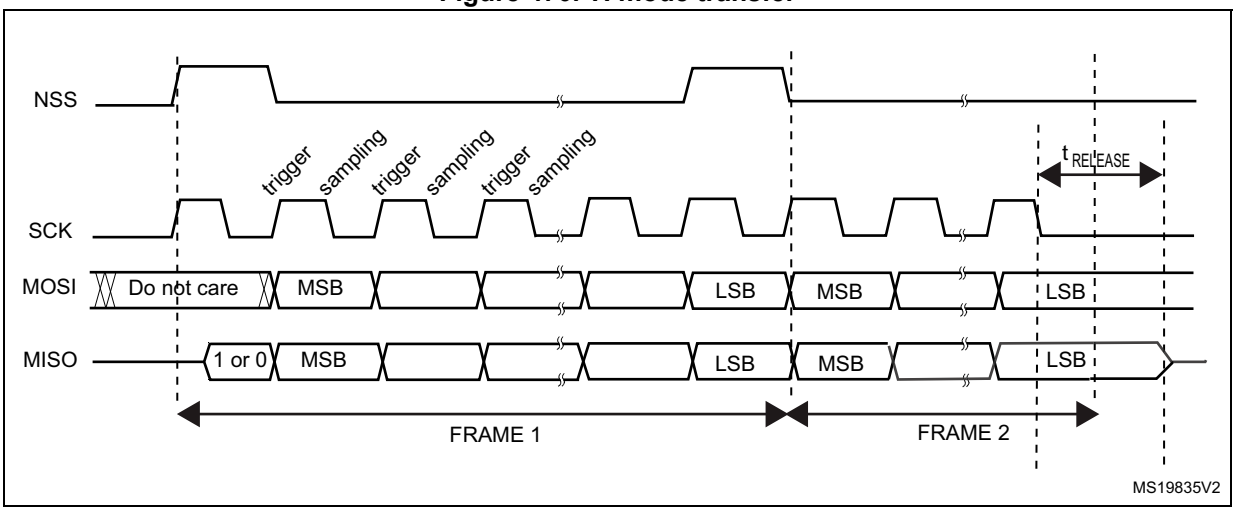

42.4.14 CRC calculation

Two separate CRC calculators are implemented in order to check the reliability of transmitted and received data. The SPI offers CRC8 or CRC16 calculation independently of the frame data length, which can be fixed to 8-bit or 16-bit. For all the other data frame lengths, no CRC is available.

CRC principle

CRC calculation is enabled by setting the CRCEN bit in the SPIx_CR1 register before the SPI is enabled (SPE = 1). The CRC value is calculated using an odd programmable polynomial on each bit. The calculation is processed on the sampling clock edge defined by the CPHA and CPOL bits in the SPIx_CR1 register. The calculated CRC value is checked automatically at the end of the data block as well as for transfer managed by CPU or by the DMA. When a mismatch is detected between the CRC calculated internally on the received data and the CRC sent by the transmitter, a CRCERR flag is set to indicate a data corruption error. The right procedure for handling the CRC calculation depends on the SPI configuration and the chosen transfer management.

Note: The polynomial value should only be odd. No even values are supported.

CRC transfer managed by CPU

Communication starts and continues normally until the last data frame has to be sent or received in the SPIx_DR register. Then CRCNEXT bit has to be set in the SPIx_CR1 register to indicate that the CRC frame transaction follows after the transaction of the currently processed data frame. The CRCNEXT bit must be set before the end of the last data frame transaction. CRC calculation is frozen during CRC transaction.

The received CRC is stored in the RXFIFO like a data byte or word. That is why in CRC mode only, the reception buffer has to be considered as a single 16-bit buffer used to receive only one data frame at a time.

A CRC-format transaction usually takes one more data frame to communicate at the end of data sequence. However, when setting an 8-bit data frame checked by 16-bit CRC, two more frames are necessary to send the complete CRC.

When the last CRC data is received, an automatic check is performed comparing the received value and the value in the SPIx_RXCRC register. Software has to check the CRCERR flag in the SPIx_SR register to determine if the data transfers were corrupted or not. Software clears the CRCERR flag by writing '0' to it.

After the CRC reception, the CRC value is stored in the RXFIFO and must be read in the SPIx_DR register in order to clear the RXNE flag.

CRC transfer managed by DMA

When SPI communication is enabled with CRC communication and DMA mode, the transmission and reception of the CRC at the end of communication is automatic (with the exception of reading CRC data in receive only mode). The CRCNEXT bit does not have to be handled by the software. The counter for the SPI transmission DMA channel has to be set to the number of data frames to transmit excluding the CRC frame. On the receiver side, the received CRC value is handled automatically by DMA at the end of the transaction but user must take care to flush out received CRC information from RXFIFO as it is always loaded into it. In full-duplex mode, the counter of the reception DMA channel can be set to the number of data frames to receive including the CRC, which means, for example, in the specific case of an 8-bit data frame checked by 16-bit CRC:

DMA_RX = Numb_of_data + 2

In receive only mode, the DMA reception channel counter should contain only the amount of data transferred, excluding the CRC calculation. Then based on the complete transfer from DMA, all the CRC values must be read back by software from FIFO as it works as a single buffer in this mode.

At the end of the data and CRC transfers, the CRCERR flag in the SPIx_SR register is set if corruption occurred during the transfer.

If packing mode is used, the LDMA_RX bit needs managing if the number of data is odd.

Resetting the SPIx_TXCRC and SPIx_RXCRC values

The SPIx_TXCRC and SPIx_RXCRC values are cleared automatically when new data is sampled after a CRC phase. This allows the use of DMA circular mode (not available in receive-only mode) in order to transfer data without any interruption, (several data blocks covered by intermediate CRC checking phases).

If the SPI is disabled during a communication the following sequence must be followed:

1. Disable the SPI
2. Clear the CRCEN bit
3. Enable the CRCEN bit
4. Enable the SPI

Note: When the SPI interface is configured as a slave, the NSS internal signal needs to be kept low during transaction of the CRC phase once the CRCNEXT signal is released. That is why the CRC calculation cannot be used at NSS Pulse mode when NSS hardware mode should be applied at slave normally.

At TI mode, despite the fact that clock phase and clock polarity setting is fixed and independent on SPIx_CR1 register, the corresponding setting CPOL=0 CPHA=1 has to be kept at the SPIx_CR1 register anyway if CRC is applied. In addition, the CRC calculation has to be reset between sessions by SPI disable sequence with re-enable the CRCEN bit described above at both master and slave side, else CRC calculation can be corrupted at this specific mode.

42.5 SPI interrupts

During SPI communication an interrupt can be generated by the following events:

- Transmit TXFIFO ready to be loaded
- Data received in Receive RXFIFO
- Master mode fault
- Overrun error
- TI frame format error
- CRC protocol error

Interrupts can be enabled and disabled separately.

Table 264. SPI interrupt requests

Interrupt event	Event flag	Enable Control bit
Transmit TXFIFO ready to be loaded	TXE	TXEIE
Data received in RXFIFO	RXNE	RXNEIE
Master Mode fault event	MODF	ERRIE
Overrun error	OVR	
TI frame format error	FRE	
CRC protocol error	CRCERR	

42.6 SPI registers

The peripheral registers can be accessed by half-words (16-bit) or words (32-bit). SPI_DR in addition can be accessed by 8-bit access.

42.6.1 SPI control register 1 (SPIx_CR1)

Address offset: 0x00

Reset value: 0x0000

15	14	13	12	11	10	9	8	7	6	5	4	3	2	1	0
BIDIMODE	BIDIOE	CRCEN	CRCNEXT	CRCL	RXONLY	SSM	SSI	LSBFIRST	SPE	BR[2:0]			MSTR	CPOL	CPHA
rw	rw	rw	rw	rw	rw	rw	rw	rw	rw	rw	rw	rw	rw	rw	rw

Bit 15 **BIDIMODE:** Bidirectional data mode enable.

This bit enables half-duplex communication using common single bidirectional data line. Keep RXONLY bit clear when bidirectional mode is active.

0: 2-line unidirectional data mode selected

1: 1-line bidirectional data mode selected

Bit 14 **BIDIOE:** Output enable in bidirectional mode

This bit combined with the BIDIMODE bit selects the direction of transfer in bidirectional mode.

0: Output disabled (receive-only mode)

1: Output enabled (transmit-only mode)

Note: In master mode, the MOSI pin is used and in slave mode, the MISO pin is used.

Bit 13 **CRCEN:** Hardware CRC calculation enable

0: CRC calculation disabled

1: CRC calculation enabled

Note: This bit should be written only when SPI is disabled (SPE = '0') for correct operation.

Bit 12 **CRCNEXT:** Transmit CRC next

0: Next transmit value is from Tx buffer.

1: Next transmit value is from Tx CRC register.

Note: This bit has to be written as soon as the last data is written in the SPIx_DR register.

Bit 11 **CRCL:** CRC length

This bit is set and cleared by software to select the CRC length.

0: 8-bit CRC length

1: 16-bit CRC length

Note: This bit should be written only when SPI is disabled (SPE = '0') for correct operation.

Bit 10 **RXONLY:** Receive only mode enabled.

This bit enables simplex communication using a single unidirectional line to receive data exclusively. Keep BIDIMODE bit clear when receive only mode is active.This bit is also useful in a multislave system in which this particular slave is not accessed, the output from the accessed slave is not corrupted.

0: Full-duplex (Transmit and receive)

1: Output disabled (Receive-only mode)

Bit 9 **SSM:** Software slave management

When the SSM bit is set, the NSS pin input is replaced with the value from the SSI bit.

0: Software slave management disabled

1: Software slave management enabled

Note: This bit is not used in SPI TI mode.

Bit 8 **SSI:** Internal slave select

This bit has an effect only when the SSM bit is set. The value of this bit is forced onto the NSS pin and the I/O value of the NSS pin is ignored.

Note: This bit is not used in SPI TI mode.

Bit 7 **LSBFIRST***:* Frame format

0: data is transmitted / received with the MSB first

1: data is transmitted / received with the LSB first

Note: 1. This bit should not be changed when communication is ongoing.

2. This bit is not used in SPI TI mode.

Bit 6 **SPE:** SPI enable

0: Peripheral disabled

1: Peripheral enabled

Note: When disabling the SPI, follow the procedure described in Procedure for disabling the SPI on page 1462.

Bits 5:3 **BR[2:0]:** Baud rate control

000: $f_{PCLK}/2$

001: $f_{PCLK}/4$

010: $f_{PCLK}/8$

011: $f_{PCLK}/16$

100: $f_{PCLK}/32$

101: $f_{PCLK}/64$

110: $f_{PCLK}/128$

111: $f_{PCLK}/256$

Note: These bits should not be changed when communication is ongoing.

Bit 2 **MSTR:** Master selection

0: Slave configuration

1: Master configuration

Note: This bit should not be changed when communication is ongoing.

Bit 1 **CPOL:** Clock polarity

0: CK to 0 when idle

1: CK to 1 when idle

Note: This bit should not be changed when communication is ongoing.

This bit is not used in SPI TI mode except the case when CRC is applied at TI mode.

Bit 0 **CPHA:** Clock phase

0: The first clock transition is the first data capture edge

1: The second clock transition is the first data capture edge

Note: This bit should not be changed when communication is ongoing.

This bit is not used in SPI TI mode except the case when CRC is applied at TI mode.

42.6.2 SPI control register 2 (SPIx_CR2)

Address offset: 0x04

Reset value: 0x0700

15	14	13	12	11	10	9	8	7	6	5	4	3	2	1	0
Res.	LDMA_TX	LDMA_RX	FRXTH	DS[3:0]				TXEIE	RXNEIE	ERRIE	FRF	NSSP	SSOE	TXDMAEN	RXDMAEN
	rw	rw	rw	rw	rw	rw	rw	rw	rw	rw	rw	rw	rw	rw	rw

Bit 15 Reserved, must be kept at reset value.

Bit 14 **LDMA_TX:** Last DMA transfer for transmission

This bit is used in data packing mode, to define if the total number of data to transmit by DMA is odd or even. It has significance only if the TXDMAEN bit in the SPIx_CR2 register is set and if packing mode is used (data length =< 8-bit and write access to SPIx_DR is 16-bit wide). It has to be written when the SPI is disabled (SPE = 0 in the SPIx_CR1 register).

0: Number of data to transfer is even

1: Number of data to transfer is odd

Note: Refer to Procedure for disabling the SPI on page 1462 if the CRCEN bit is set.

Bit 13 **LDMA_RX**: Last DMA transfer for reception

This bit is used in data packing mode, to define if the total number of data to receive by DMA is odd or even. It has significance only if the RXDMAEN bit in the SPIx_CR2 register is set and if packing mode is used (data length =< 8-bit and write access to SPIx_DR is 16-bit wide). It has to be written when the SPI is disabled (SPE = 0 in the SPIx_CR1 register).

0: Number of data to transfer is even

1: Number of data to transfer is odd

Note: Refer to Procedure for disabling the SPI on page 1462 if the CRCEN bit is set.

Bit 12 **FRXTH**: FIFO reception threshold

This bit is used to set the threshold of the RXFIFO that triggers an RXNE event

0: RXNE event is generated if the FIFO level is greater than or equal to 1/2 (16-bit)

1: RXNE event is generated if the FIFO level is greater than or equal to 1/4 (8-bit)

Note:

Bits 11:8 **DS[3:0]**: Data size

These bits configure the data length for SPI transfers.

0000: Not used
0001: Not used
0010: Not used
0011: 4-bit
0100: 5-bit
0101: 6-bit
0110: 7-bit
0111: 8-bit
1000: 9-bit
1001: 10-bit
1010: 11-bit
1011: 12-bit
1100: 13-bit
1101: 14-bit
1110: 15-bit
1111: 16-bit

If software attempts to write one of the “Not used” values, they are forced to the value “0111” (8-bit)

.

Bit 7 **TXEIE:** Tx buffer empty interrupt enable

0: TXE interrupt masked
1: TXE interrupt not masked. Used to generate an interrupt request when the TXE flag is set.

Bit 6 **RXNEIE:** RX buffer not empty interrupt enable

0: RXNE interrupt masked
1: RXNE interrupt not masked. Used to generate an interrupt request when the RXNE flag is set.

Bit 5 **ERRIE:** Error interrupt enable

This bit controls the generation of an interrupt when an error condition occurs (CRCERR, OVR, MODF in SPI mode, FRE at TI mode).

0: Error interrupt is masked
1: Error interrupt is enabled

Bit 4 **FRF**: Frame format

0: SPI Motorola mode
1 SPI TI mode

Note: This bit must be written only when the SPI is disabled (SPE=0).

Bit 3 **NSSP**: NSS pulse management

This bit is used in master mode only. it allows the SPI to generate an NSS pulse between two consecutive data when doing continuous transfers. In the case of a single data transfer, it forces the NSS pin high level after the transfer.

It has no meaning if CPHA = ’1’, or FRF = ’1’.

0: No NSS pulse
1: NSS pulse generated

Note: 1. This bit must be written only when the SPI is disabled (SPE=0).
2. This bit is not used in SPI TI mode.

Bit 2 **SSOE:** SS output enable

0: SS output is disabled in master mode and the SPI interface can work in multimaster configuration

1: SS output is enabled in master mode and when the SPI interface is enabled. The SPI interface cannot work in a multimaster environment.

Note: This bit is not used in SPI TI mode.

Bit 1 **TXDMAEN:** Tx buffer DMA enable

When this bit is set, a DMA request is generated whenever the TXE flag is set.

0: Tx buffer DMA disabled

1: Tx buffer DMA enabled

Bit 0 **RXDMAEN:** Rx buffer DMA enable

When this bit is set, a DMA request is generated whenever the RXNE flag is set.

0: Rx buffer DMA disabled

1: Rx buffer DMA enabled

42.6.3 SPI status register (SPIx_SR)

Address offset: 0x08

Reset value: 0x0002

15	14	13	12	11	10	9	8	7	6	5	4	3	2	1	0
Res.	Res.	Res.	FTLVL[1:0]		FRLVL[1:0]		FRE	BSY	OVR	MODF	CRCERR	Res.	Res.	TXE	RXNE
			r	r	r	r	r	r	r	r	rc_w0			r	r

Bits 15:13 Reserved, must be kept at reset value.

Bits 12:11 **FTLVL[1:0]:** FIFO transmission level

These bits are set and cleared by hardware.

00: FIFO empty

01: 1/4 FIFO

10: 1/2 FIFO

11: FIFO full (considered as FULL when the FIFO threshold is greater than 1/2)

Bits 10:9 **FRLVL[1:0]**: FIFO reception level

These bits are set and cleared by hardware.

00: FIFO empty

01: 1/4 FIFO

10: 1/2 FIFO

11: FIFO full

Note: These bits are not used in SPI receive-only mode while CRC calculation is enabled.

Bit 8 **FRE**: Frame format error

This flag is used for SPI in TI slave mode. Refer to *Section 42.4.11: SPI error flags*.

This flag is set by hardware and reset when SPIx_SR is read by software.

0: No frame format error

1: A frame format error occurred

Bit 7 **BSY:** Busy flag

0: SPI not busy

1: SPI is busy in communication or Tx buffer is not empty

This flag is set and cleared by hardware.

Note: The BSY flag must be used with caution: refer to Section 42.4.10: SPI status flags and Procedure for disabling the SPI on page 1462.

Bit 6 **OVR:** Overrun flag

0: No overrun occurred

1: Overrun occurred

This flag is set by hardware and reset by a software sequence.

Bit 5 **MODF:** Mode fault

0: No mode fault occurred

1: Mode fault occurred

This flag is set by hardware and reset by a software sequence. Refer to *Section : Mode fault (MODF) on page 1471* for the software sequence.

Bit 4 **CRCERR:** CRC error flag

0: CRC value received matches the SPIx_RXCRCR value

1: CRC value received does not match the SPIx_RXCRCR value

Note: This flag is set by hardware and cleared by software writing 0.

Bits 3:2 Reserved, must be kept at reset value.

Bit 1 **TXE:** Transmit buffer empty

0: Tx buffer not empty

1: Tx buffer empty

Bit 0 **RXNE:** Receive buffer not empty

0: Rx buffer empty

1: Rx buffer not empty

42.6.4 SPI data register (SPIx_DR)

Address offset: 0x0C

Reset value: 0x0000

15	14	13	12	11	10	9	8	7	6	5	4	3	2	1	0
DR[15:0]															
rw	rw	rw	rw	rw	rw	rw	rw	rw	rw	rw	rw	rw	rw	rw	rw

Bits 15:0 **DR[15:0]:** Data register

Data received or to be transmitted

The data register serves as an interface between the Rx and Tx FIFOs. When the data register is read, RxFIFO is accessed while the write to data register accesses TxFIFO (See *Section 42.4.9: Data transmission and reception procedures*).

Note: Data is always right-aligned. Unused bits are ignored when writing to the register, and read as zero when the register is read. The Rx threshold setting must always correspond with the read access currently used.

42.6.5 SPI CRC polynomial register (SPIx_CRCPR)

Address offset: 0x10

Reset value: 0x0007

15	14	13	12	11	10	9	8	7	6	5	4	3	2	1	0
CRCPOLY[15:0]															
rw	rw	rw	rw	rw	rw	rw	rw	rw	rw	rw	rw	rw	rw	rw	rw

Bits 15:0 **CRCPOLY[15:0]:** CRC polynomial register

This register contains the polynomial for the CRC calculation.

The CRC polynomial (0x0007) is the reset value of this register. Another polynomial can be configured as required.

Note: The polynomial value should be odd only. No even value is supported.

42.6.6 SPI Rx CRC register (SPIx_RXCRCR)

Address offset: 0x14

Reset value: 0x0000

15	14	13	12	11	10	9	8	7	6	5	4	3	2	1	0
RXCRC[15:0]															
r	r	r	r	r	r	r	r	r	r	r	r	r	r	r	r

Bits 15:0 **RXCRC[15:0]:** Rx CRC register

When CRC calculation is enabled, the RXCRC[15:0] bits contain the computed CRC value of the subsequently received bytes. This register is reset when the CRCEN bit in SPIx_CR1 register is written to 1. The CRC is calculated serially using the polynomial programmed in the SPIx_CRCPR register.

Only the 8 LSB bits are considered when the CRC frame format is set to be 8-bit length (CRCL bit in the SPIx_CR1 is cleared). CRC calculation is done based on any CRC8 standard.

The entire 16-bits of this register are considered when a 16-bit CRC frame format is selected (CRCL bit in the SPIx_CR1 register is set). CRC calculation is done based on any CRC16 standard.

A read to this register when the BSY Flag is set could return an incorrect value.

42.6.7 SPI Tx CRC register (SPIx_TXCRCR)

Address offset: 0x18

Reset value: 0x0000

15	14	13	12	11	10	9	8	7	6	5	4	3	2	1	0
TXCRC[15:0]															
r	r	r	r	r	r	r	r	r	r	r	r	r	r	r	r

Bits 15:0 **TXCRC[15:0]:** Tx CRC register

When CRC calculation is enabled, the TXCRC[7:0] bits contain the computed CRC value of the subsequently transmitted bytes. This register is reset when the CRCEN bit of SPIx_CR1 is written to 1. The CRC is calculated serially using the polynomial programmed in the SPIx_CRCPR register.

Only the 8 LSB bits are considered when the CRC frame format is set to be 8-bit length (CRCL bit in the SPIx_CR1 is cleared). CRC calculation is done based on any CRC8 standard.

The entire 16-bits of this register are considered when a 16-bit CRC frame format is selected (CRCL bit in the SPIx_CR1 register is set). CRC calculation is done based on any CRC16 standard.

A read to this register when the BSY flag is set could return an incorrect value.

42.6.8 SPI register map

Table 265 shows the SPI register map and reset values.

Table 265. SPI register map and reset values

Offset	Register	31	30	29	28	27	26	25	24	23	22	21	20	19	18	17	16	15	14	13	12	11	10	9	8	7	6	5	4	3	2	1	0
0x00	**SPIx_CR1**	Res.	Res.	Res.	Res.	Res.	Res.	Res.	Res.	Res.	Res.	Res.	Res.	Res.	Res.	Res.	Res.	BIDIMODE	BIDIOE	CRCEN	CRCNEXT	CRCL	RXONLY	SSM	SSI	LSBFIRST	SPE	BR [2:0]			MSTR	CPOL	CPHA
	Reset value																	0	0	0	0	0	0	0	0	0	0	0	0	0	0	0	0
0x04	**SPIx_CR2**	Res.	Res.	Res.	Res.	Res.	Res.	Res.	Res.	Res.	Res.	Res.	Res.	Res.	Res.	Res.	Res.	Res.	LDMA_TX	LDMA_RX	FRXTH	DS[3:0]				TXEIE	RXNEIE	ERRIE	FRF	NSSP	SSOE	TXDMAEN	RXDMAEN
	Reset value																		0	0	0	0	1	1	1	0	0	0	0	0	0	0	0
0x08	**SPIx_SR**	Res.	Res.	Res.	Res.	Res.	Res.	Res.	Res.	Res.	Res.	Res.	Res.	Res.	Res.	Res.	Res.	Res.	Res.	Res.	FTLVL[1:0]		FRLVL[1:0]		FRE	BSY	OVR	MODF	CRCERR	Res.	Res.	TXE	RXNE
	Reset value																				0	0	0	0	0	0	0	0	0			1	0
0x0C	**SPIx_DR**	Res.	Res.	Res.	Res.	Res.	Res.	Res.	Res.	Res.	Res.	Res.	Res.	Res.	Res.	Res.	Res.	DR[15:0]															
	Reset value																	0	0	0	0	0	0	0	0	0	0	0	0	0	0	0	0
0x10	**SPIx_CRCPR**	Res.	Res.	Res.	Res.	Res.	Res.	Res.	Res.	Res.	Res.	Res.	Res.	Res.	Res.	Res.	Res.	CRCPOLY[15:0]															
	Reset value																	0	0	0	0	0	0	0	0	0	0	0	0	0	1	1	1
0x14	**SPIx_RXCRCR**	Res.	Res.	Res.	Res.	Res.	Res.	Res.	Res.	Res.	Res.	Res.	Res.	Res.	Res.	Res.	Res.	RXCRC[15:0]															
	Reset value																	0	0	0	0	0	0	0	0	0	0	0	0	0	0	0	0
0x18	**SPIx_TXCRCR**	Res.	Res.	Res.	Res.	Res.	Res.	Res.	Res.	Res.	Res.	Res.	Res.	Res.	Res.	Res.	Res.	TXCRC[15:0]															
	Reset value																	0	0	0	0	0	0	0	0	0	0	0	0	0	0	0	0

Refer to *Section 2.2 on page 75* for the register boundary addresses.

43 Serial audio interface (SAI)

43.1 Introduction

The SAI interface (Serial audio interface) offers a wide set of audio protocols due to its flexibility and wide range of configurations. Many stereo or mono audio applications may be targeted. I2S standards, LSB or MSB-justified, PCM/DSP, TDM, and AC'97 protocols may be addressed for example. SPDIF output is offered when the audio block is configured as a transmitter.

To bring this level of flexibility and reconfigurability, the SAI contains two independent audio subblocks. Each block has it own clock generator and I/O line controller.

The SAI works in master or slave configuration. The audio subblocks are either receiver or transmitter and work synchronously or not (with respect to the other one).

The SAI can be connected with other SAIs to work synchronously.

43.2 SAI main features

- Two independent audio subblocks which can be transmitters or receivers with their respective FIFO.
- 8-word integrated FIFOs for each audio subblock.
- Synchronous or asynchronous mode between the audio subblocks.
- Possible synchronization between multiple SAIs.
- Master or slave configuration independent for both audio subblocks.
- Clock generator for each audio block to target independent audio frequency sampling when both audio subblocks are configured in master mode.
- Data size configurable: 8-, 10-, 16-, 20-, 24-, 32-bit.
- Audio protocol: I2S, LSB or MSB-justified, PCM/DSP, TDM, AC'97
- SPDIF output available if required.
- Up to 16 slots available with configurable size.
- Number of bits by frame can be configurable.
- Frame synchronization active level configurable (offset, bit length, level).
- First active bit position in the slot is configurable.
- LSB first or MSB first for data transfer.
- Mute mode.
- Stereo/Mono audio frame capability.
- Communication clock strobing edge configurable (SCK).
- Error flags with associated interrupts if enabled respectively.
  - Overrun and underrun detection,
  - Anticipated frame synchronization signal detection in slave mode,
  - Late frame synchronization signal detection in slave mode,
  - Codec not ready for the AC'97 mode in reception.
- Interrupt sources when enabled:
  - Errors,
  - FIFO requests.
- 2-channel DMA interface.

43.3 SAI functional description

43.3.1 SAI block diagram

Figure 471 shows the SAI block diagram while *Table 266* and *Table 267* list SAI internal and external signals.

Figure 471. SAI functional block diagram

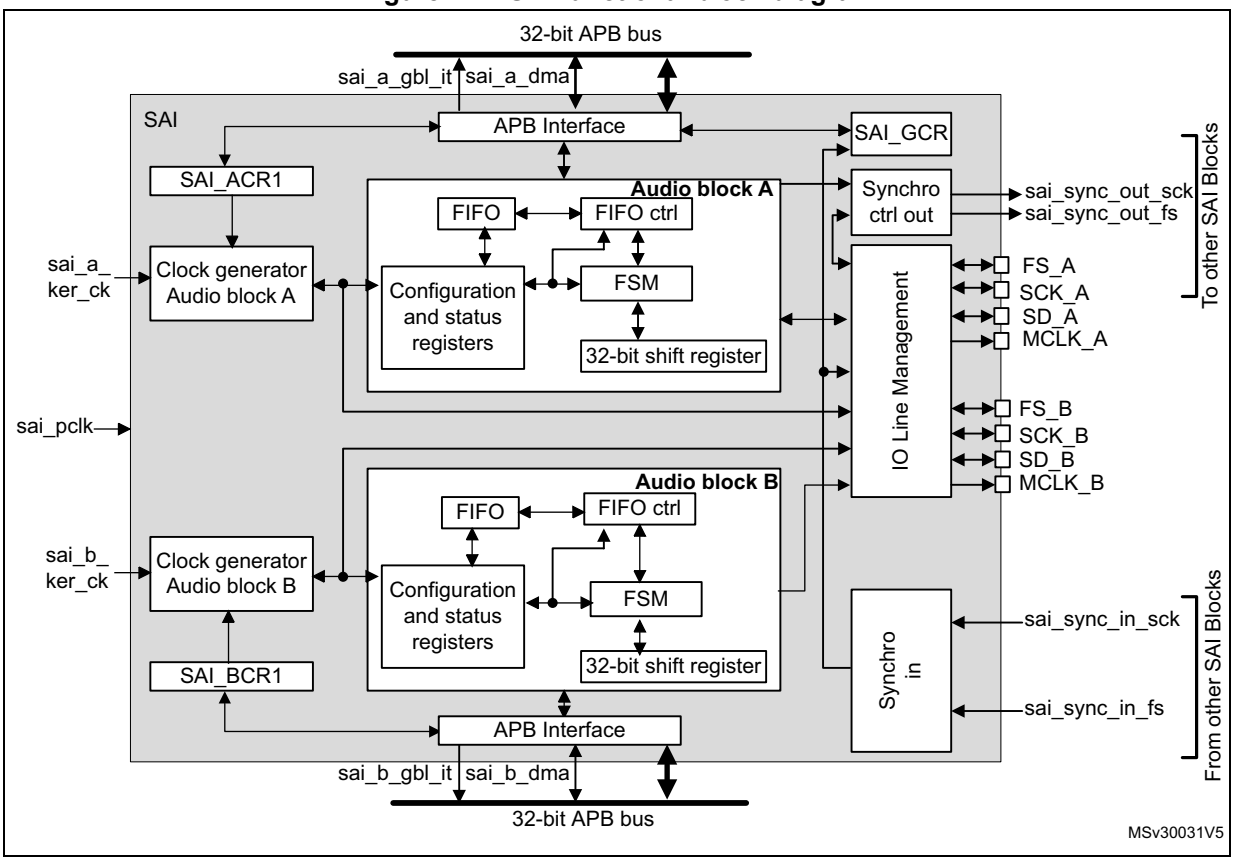

The SAI is mainly composed of two audio subblocks with their own clock generator. Each audio block integrates a 32-bit shift register controlled by their own functional state machine. Data are stored or read from the dedicated FIFO. FIFO may be accessed by the CPU, or by DMA in order to leave the CPU free during the communication. Each audio block is independent. They can be synchronous with each other.

An I/O line controller manages a set of 4 dedicated pins (SD, SCK, FS, MCLK) for a given audio block in the SAI. Some of these pins can be shared if the two subblocks are declared as synchronous to leave some free to be used as general purpose I/Os. The MCLK pin can be output, or not, depending on the application, the decoder requirement and whether the audio block is configured as the master.

If one SAI is configured to operate synchronously with another one, even more I/Os can be freed (except for pins SD_x).

The functional state machine can be configured to address a wide range of audio protocols. Some registers are present to set-up the desired protocols (audio frame waveform generator).

The audio subblock can be a transmitter or receiver, in master or slave mode. The master mode means the SCK_x bit clock and the frame synchronization signal are generated from the SAI, whereas in slave mode, they come from another external or internal master. There is a particular case for which the FS signal direction is not directly linked to the master or slave mode definition. In AC'97 protocol, it will be an SAI output even if the SAI (link controller) is set-up to consume the SCK clock (and so to be in Slave mode).

Note: For ease of reading of this section, the notation SAI_x refers to SAI_A or SAI_B, where 'x' represents the SAI A or B subblock.

43.3.2 SAI pins and internal signals

Table 266. SAI internal input/output signals

Internal signal name	Signal type	Description
sai_a_gbl_it/ sai_b_gbl_it	Output	Audio block A and B global interrupts.
sai_a_dma, sai_b_dma	Input/output	Audio block A and B DMA acknowledges and requests.
sai_sync_out_sck, sai_sync_out_fs	Output	Internal clock and frame synchronization output signals exchanged with other SAI blocks.
sai_sync_in_sck, sai_sync_in_fs	Input	Internal clock and frame synchronization input signals exchanged with other SAI blocks.
sai_a_ker_ck/ sai_b_ker_ck	Input	Audio block A/B kernel clock.
sai_pclk	Input	APB clock.

Table 267. SAI input/output pins

Name	Signal type	Comments
SAI_SCK_A/B	Input/output	Audio block A/B bit clock.
SAI_MCLK_A/B	Output	Audio block A/B master clock.
SAI_SD_A/B	Input/output	Data line for block A/B.
SAI_FS_A/B	Input/output	Frame synchronization line for audio block A/B.

43.3.3 Main SAI modes

Each audio subblock of the SAI can be configured to be master or slave via MODE bits in the SAI_xCR1 register of the selected audio block.

Master mode

In master mode, the SAI delivers the timing signals to the external connected device:

- The bit clock and the frame synchronization are output on pin SCK_x and FS_x, respectively.
- If needed, the SAI can also generate a master clock on MCLK_x pin.

Both SCK_x, FS_x and MCLK_x are configured as outputs.

Slave mode

The SAI expects to receive timing signals from an external device.

- If the SAI subblock is configured in asynchronous mode, then SCK_x and FS_x pins are configured as inputs.
- If the SAI subblock is configured to operate synchronously with another SAI interface or with the second audio subblock, the corresponding SCK_x and FS_x pins are left free to be used as general purpose I/Os.

In slave mode, MCLK_x pin is not used and can be assigned to another function.

It is recommended to enable the slave device before enabling the master.

Configuring and enabling SAI modes

Each audio subblock can be independently defined as a transmitter or receiver through the MODE bit in the SAI_xCR1 register of the corresponding audio block. As a result, SAI_SD_x pin will be respectively configured as an output or an input.

Two master audio blocks in the same SAI can be configured with two different MCLK and SCK clock frequencies. In this case they have to be configured in asynchronous mode.

Each of the audio blocks in the SAI are enabled by SAIEN bit in the SAI_xCR1 register. As soon as this bit is active, the transmitter or the receiver is sensitive to the activity on the clock line, data line and synchronization line in slave mode.

In master TX mode, enabling the audio block immediately generates the bit clock for the external slaves even if there is no data in the FIFO, However FS signal generation is conditioned by the presence of data in the FIFO. After the FIFO receives the first data to transmit, this data is output to external slaves. If there is no data to transmit in the FIFO, 0 values are then sent in the audio frame with an underrun flag generation.

In slave mode, the audio frame starts when the audio block is enabled and when a start of frame is detected.

In Slave TX mode, no underrun event is possible on the first frame after the audio block is enabled, because the mandatory operating sequence in this case is:

1. Write into the SAI_xDR (by software or by DMA).
2. Wait until the FIFO threshold (FLH) flag is different from 0b000 (FIFO empty).
3. Enable the audio block in slave transmitter mode.

43.3.4 SAI synchronization mode

There are two levels of synchronization, either at audio subblock level or at SAI level.

Internal synchronization

An audio subblock can be configured to operate synchronously with the second audio subblock in the same SAI. In this case, the bit clock and the frame synchronization signals are shared to reduce the number of external pins used for the communication. The audio block configured in synchronous mode sees its own SCK_x, FS_x, and MCLK_x pins released back as GPIOs while the audio block configured in asynchronous mode is the one for which FS_x and SCK_x ad MCLK_x I/O pins are relevant (if the audio block is considered as master).

Typically, the audio block in synchronous mode can be used to configure the SAI in full duplex mode. One of the two audio blocks can be configured as a master and the other as slave, or both as slaves with one asynchronous block (corresponding SYNCEN[1:0] bits set to 00 in SAI_xCR1) and one synchronous block (corresponding SYNCEN[1:0] bits set to 01 in the SAI_xCR1).

Note: Due to internal resynchronization stages, PCLK APB frequency must be higher than twice the bit rate clock frequency.

External synchronization

The audio subblocks can also be configured to operate synchronously with another SAI. This can be done as follow:

1. The SAI, which is configured as the source from which the other SAI is synchronized, has to define which of its audio subblock is supposed to provide the FS and SCK signals to other SAI. This is done by programming SYNCOUT[1:0] bits.
2. The SAI which shall receive the synchronization signals has to select which SAI will provide the synchronization by setting the proper value on SYNCIN[1:0] bits. For each of the two SAI audio subblocks, the user must then specify if it operates synchronously with the other SAI via the SYNCEN bit.

Note: SYNCIN[1:0] and SYNCOUT[1:0] bits are located into the SAI_GCR register, and SYNCEN bits into SAI_xCR1 register.

If both audio subblocks in a given SAI need to be synchronized with another SAI, it is possible to choose one of the following configurations:

- Configure each audio block to be synchronous with another SAI block through the SYNCEN[1:0] bits.
- Configure one audio block to be synchronous with another SAI through the SYNCEN[1:0] bits. The other audio block is then configured as synchronous with the second SAI audio block through SYNCEN[1:0] bits.

The following table shows how to select the proper synchronization signal depending on the SAI block used. For example SAI2 can select the synchronization from SAI1 by setting SAI2 SYNCIN to 0. If SAI1 wants to select the synchronization coming from SAI2, SAI1 SYNCIN must be set to 1. Positions noted as ‘Reserved’ shall not be used.

Table 268. External synchronization selection

Block instance	SYNCIN= 3	SYNCIN= 2	SYNCIN= 1	SYNCIN= 0
SAI1	Reserved	Reserved	SAI2 sync.	Reserved
SAI2	Reserved	Reserved	Reserved	SAI1 sync.

43.3.5 Audio data size

The audio frame can target different data sizes by configuring bit DS[2:0] in the SAI_xCR1 register. The data sizes may be 8, 10, 16, 20, 24 or 32 bits. During the transfer, either the MSB or the LSB of the data are sent first, depending on the configuration of bit LSBFIRST in the SAI_xCR1 register.

43.3.6 Frame synchronization

The FS signal acts as the Frame synchronization signal in the audio frame (start of frame). The shape of this signal is completely configurable in order to target the different audio protocols with their own specificities concerning this Frame synchronization behavior. This reconfigurability is done using register SAI_xFRCR. *Figure 472* illustrates this flexibility.

Figure 472. Audio frame

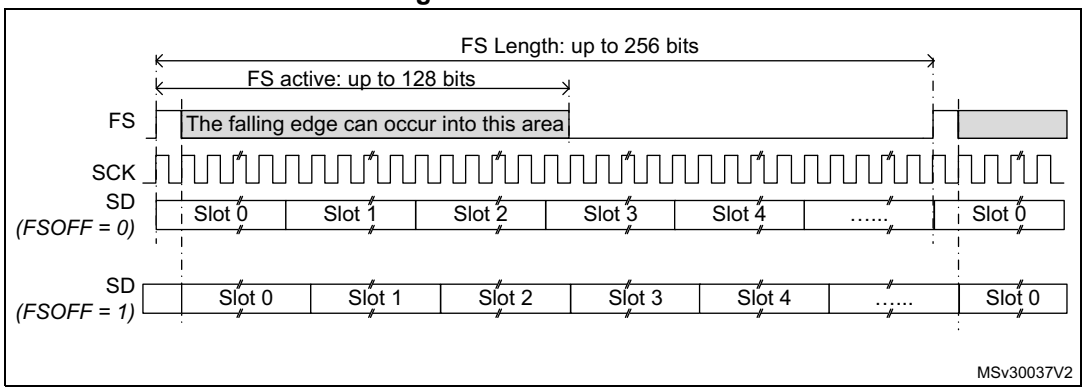

In AC'97 mode or in SPDIF mode (bit PRTCFG[1:0] = 10 or PRTCFG[1:0] = 01 in the SAI_xCR1 register), the frame synchronization shape is forced to match the AC'97 protocol. The SAI_xFRCR register value is ignored.

Each audio block is independent and consequently each one requires a specific configuration.

Frame length

- Master mode

  The audio frame length can be configured to up to 256 bit clock cycles, by setting FRL[7:0] field in the SAI_xFRCR register.

  If the frame length is greater than the number of declared slots for the frame, the remaining bits to transmit will be extended to 0 or the SD line will be released to HI-z depending the state of bit TRIS in the SAI_xCR2 register (refer to *FS signal role*). In reception mode, the remaining bit is ignored.

  If bit NODIV is cleared, (FRL+1) must be equal to a power of 2, from 8 to 256, to ensure that an audio frame contains an integer number of MCLK pulses per bit clock cycle.

  If bit NODIV is set, the (FRL+1) field can take any value from 8 to 256. Refer to *Section 43.3.8: SAI clock generator*".

- Slave mode

  The audio frame length is mainly used to specify to the slave the number of bit clock cycles per audio frame sent by the external master. It is used mainly to detect from the master any anticipated or late occurrence of the Frame synchronization signal during an on-going audio frame. In this case an error will be generated. For more details refer to *Section 43.3.13: Error flags*.

  In slave mode, there are no constraints on the FRL[7:0] configuration in the SAI_xFRCR register.

The number of bits in the frame is equal to FRL[7:0] + 1.

The minimum number of bits to transfer in an audio frame is 8.

Frame synchronization polarity

FSPOL bit in the SAI_xFRCR register sets the active polarity of the FS pin from which a frame is started. The start of frame is edge sensitive.

In slave mode, the audio block waits for a valid frame to start transmitting or receiving. Start of frame is synchronized to this signal. It is effective only if the start of frame is not detected during an ongoing communication and assimilated to an anticipated start of frame (refer to *Section 43.3.13: Error flags*).

In master mode, the frame synchronization is sent continuously each time an audio frame is complete until the SAIEN bit in the SAI_xCR1 register is cleared. If no data are present in the FIFO at the end of the previous audio frame, an underrun condition will be managed as described in *Section 43.3.13: Error flags*), but the audio communication flow will not be interrupted.

Frame synchronization active level length

The FSALL[6:0] bits of the SAI_xFRCR register allow configuring the length of the active level of the Frame synchronization signal. The length can be set from 1 to 128 bit clock cycles.

As an example, the active length can be half of the frame length in I2S, LSB or MSB-justified modes, or one-bit wide for PCM/DSP or TDM.

Frame synchronization offset

Depending on the audio protocol targeted in the application, the Frame synchronization signal can be asserted when transmitting the last bit or the first bit of the audio frame (this is the case in I2S standard protocol and in MSB-justified protocol, respectively). FSOFF bit in the SAI_xFRCR register allows to choose one of the two configurations.

FS signal role

The FS signal can have a different meaning depending on the FS function. FSDEF bit in the SAI_xFRCR register selects which meaning it will have:

- 0: start of frame, like for instance the PCM/DSP, TDM, AC’97, audio protocols,
- 1: start of frame and channel side identification within the audio frame like for the I2S, the MSB or LSB-justified protocols.

When the FS signal is considered as a start of frame and channel side identification within the frame, the number of declared slots must be considered to be half the number for the left channel and half the number for the right channel. If the number of bit clock cycles on half audio frame is greater than the number of slots dedicated to a channel side, and TRIS = 0, 0 is sent for transmission for the remaining bit clock cycles in the SAI_xCR2 register. Otherwise if TRIS = 1, the SD line is released to HI-Z. In reception mode, the remaining bit clock cycles are not considered until the channel side changes.

Figure 473. FS role is start of frame + channel side identification (FSDEF = TRIS = 1)

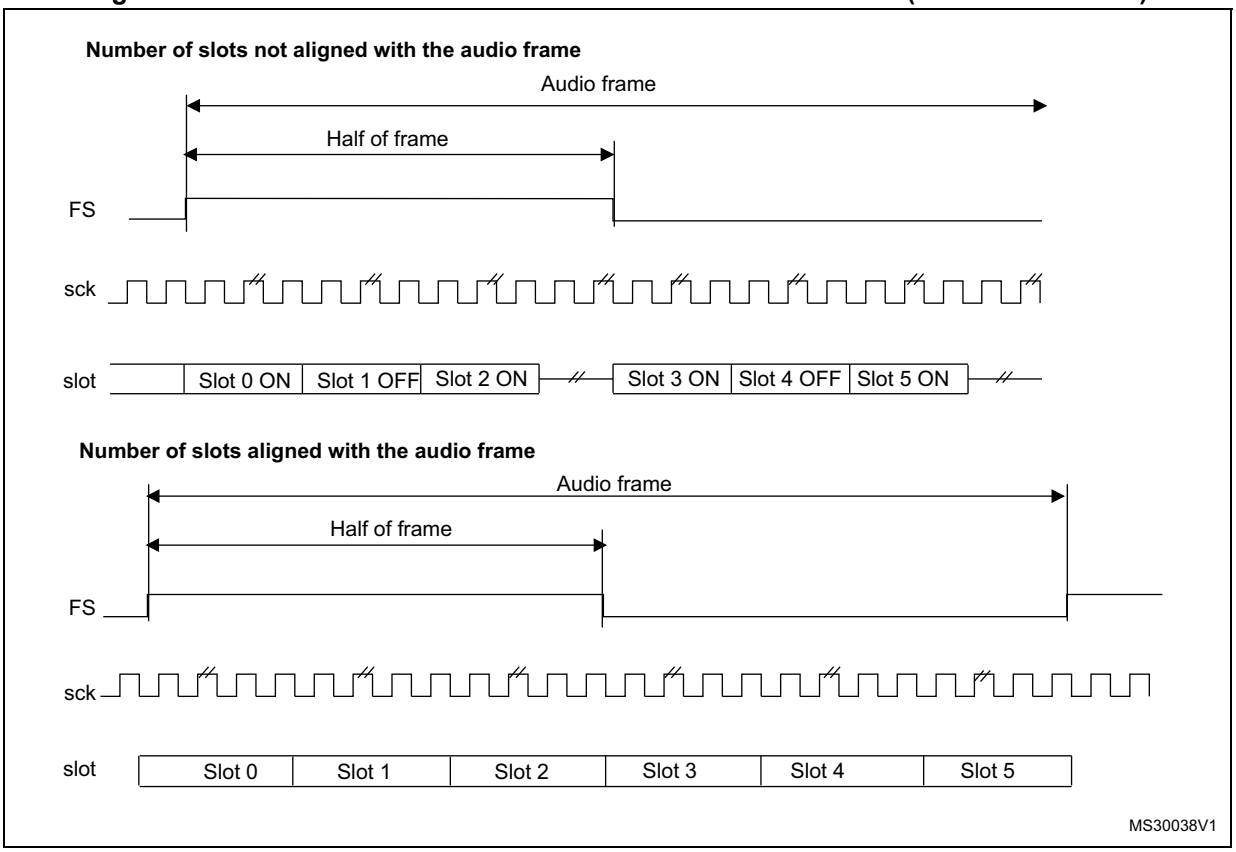

1. The frame length should be even.

If FSDEF bit in SAI_xFRCR is kept clear, so FS signal is equivalent to a start of frame, and if the number of slots defined in NBSLOT[3:0] in SAI_xSLOTR multiplied by the number of bits by slot configured in SLOTSZ[1:0] in SAI_xSLOTR is less than the frame size (bit FRL[7:0] in the SAI_xFRCR register), then:

- if TRIS = 0 in the SAI_xCR2 register, the remaining bit after the last slot will be forced to 0 until the end of frame in case of transmitter,
- if TRIS = 1, the line will be released to HI-Z during the transfer of these remaining bits. In reception mode, these bits are discarded.

Figure 474. FS role is start of frame (FSDEF = 0)

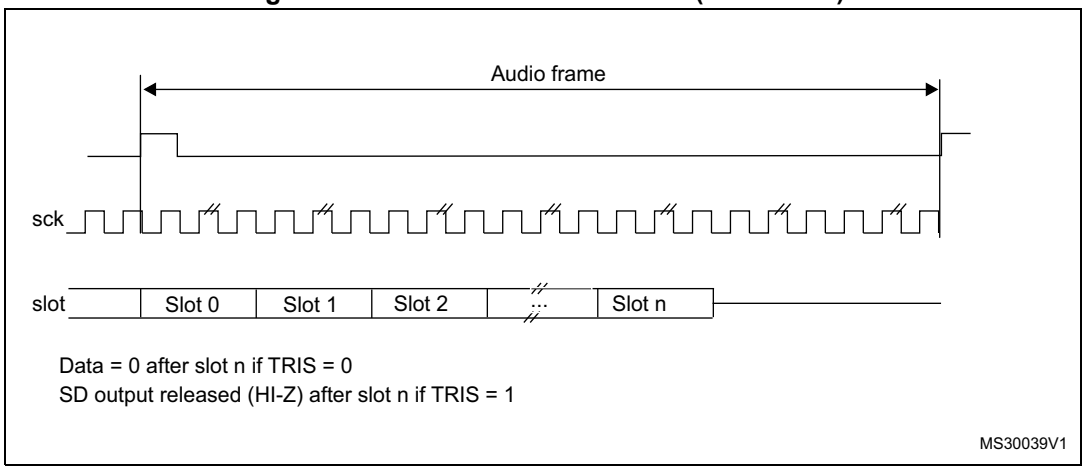

The FS signal is not used when the audio block in transmitter mode is configured to get the SPDIF output on the SD line. The corresponding FS I/O will be released and left free for other purposes.

43.3.7 Slot configuration

The slot is the basic element in the audio frame. The number of slots in the audio frame is equal to NBSLOT[3:0] + 1.

The maximum number of slots per audio frame is fixed at 16.

For AC'97 protocol or SPDIF (when bit PRTCFG[1:0] = 10 or PRTCFG[1:0] = 01), the number of slots is automatically set to target the protocol specification, and the value of NBSLOT[3:0] is ignored.

Each slot can be defined as a valid slot, or not, by setting SLOTEN[15:0] bits of the SAI_xSLOTR register.

When a invalid slot is transferred, the SD data line is either forced to 0 or released to HI-z depending on TRIS bit configuration (refer to *Output data line management on an inactive slot*) in transmitter mode. In receiver mode, the received value from the end of this slot is ignored. Consequently, there will be no FIFO access and so no request to read or write the FIFO linked to this inactive slot status.

The slot size is also configurable as shown in *Figure 475.* The size of the slots is selected by setting SLOTSZ[1:0] bits in the SAI_xSLOTR register. The size is applied identically for each slot in an audio frame.

Figure 475. Slot size configuration with FBOFF = 0 in SAI_xSLOTR

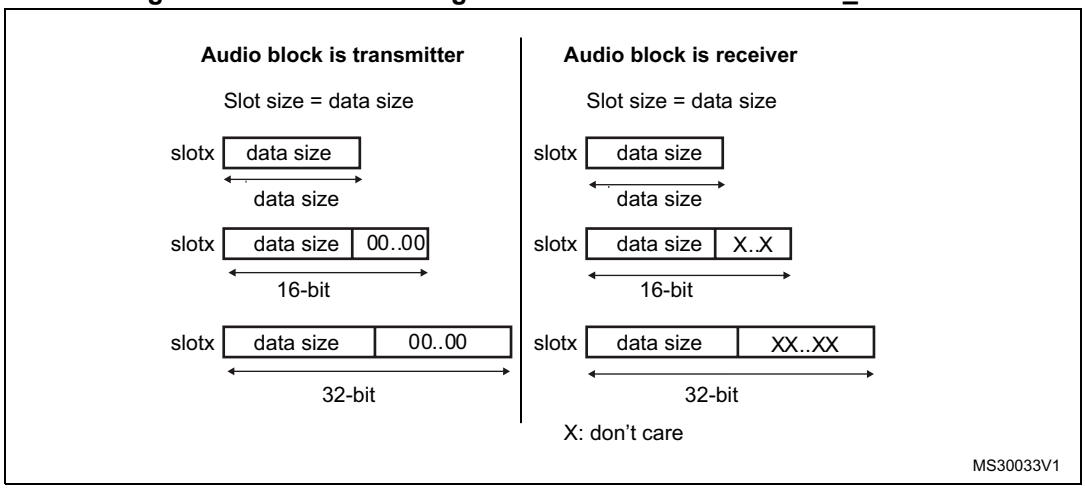

It is possible to choose the position of the first data bit to transfer within the slots. This offset is configured by FBOFF[4:0] bits in the SAI_xSLOTR register. 0 values will be injected in transmitter mode from the beginning of the slot until this offset position is reached. In reception, the bit in the offset phase is ignored. This feature targets the LSB justified protocol (if the offset is equal to the slot size minus the data size).

Figure 476. First bit offset

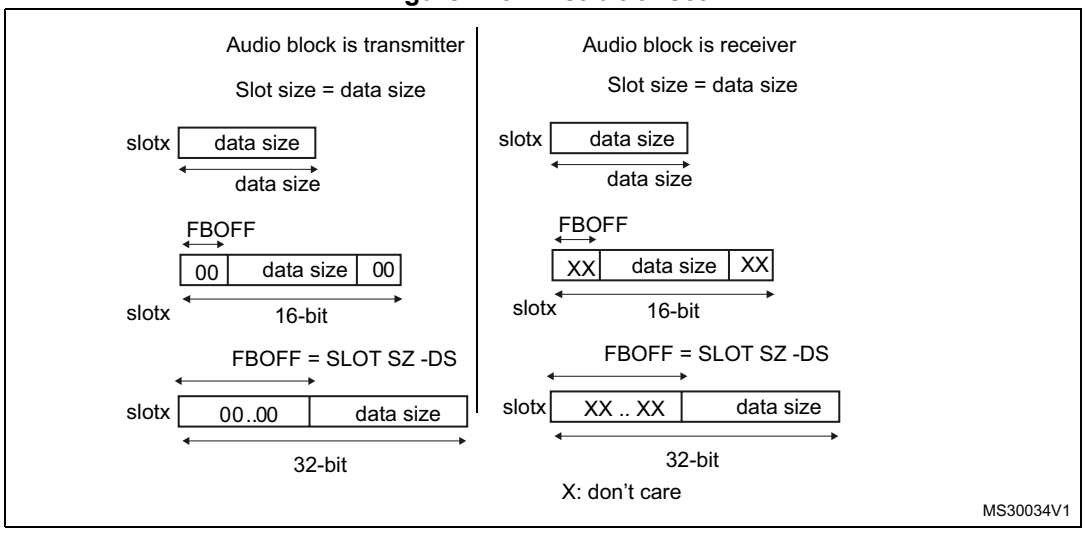

It is mandatory to respect the following conditions to avoid bad SAI behavior:

FBOFF ≤(SLOTSZ - DS),

DS ≤SLOTSZ,

NBSLOT x SLOTSZ ≤FRL (frame length),

The number of slots must be even when bit FSDEF in the SAI_xFRCR register is set.

In AC'97 and SPDIF protocol (bit PRTCFG[1:0] = 10 or PRTCFG[1:0] = 01), the slot size is automatically set as defined in *Section 43.3.10: AC'97 link controller*.

43.3.8 SAI clock generator

Each audio block has its own clock generator that makes these two blocks completely independent. There is no difference in terms of functionality between these two clock generators.

When the audio block is configured as Master, the clock generator provides the communication clock (the bit clock) and the master clock for external decoders.

When the audio block is defined as slave, the clock generator is OFF.

Figure 477 illustrates the architecture of the audio block clock generator.

Figure 477. Audio block clock generator overview

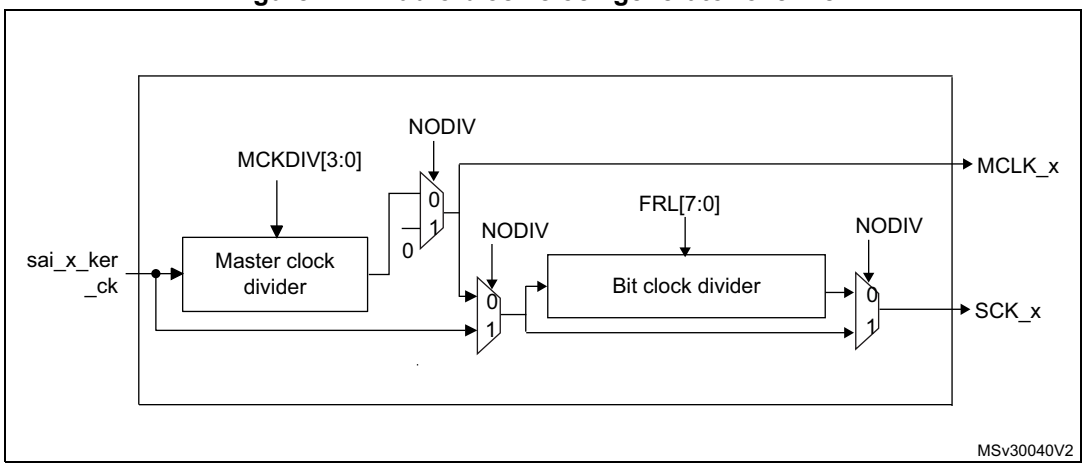

Note: If NODIV is set to 1, the MCLK_x signal will be set at 0 level if this pin is configured as the SAI pin in GPIO peripherals.

The clock source for the clock generator comes from the product clock controller. The sai_x_ker_ck clock is equivalent to the master clock which can be divided for the external decoders using bit MCKDIV[3:0]:

MCLK_x = sai_x_ker_ck / (MCKDIV[3:0] * 2), if MCKDIV[3:0] is not equal to 0000.

MCLK_x = sai_x_ker_ck, if MCKDIV[3:0] is equal to 0000.

MCLK_x signal is used only in Free protocol mode.

The division must be even in order to keep 50% on the Duty cycle on the MCLK output and on the SCK_x clock. If bit MCKDIV[3:0] = 0000, division by one is applied to obtain MCLK_x equal to sai_x_ker_ck.

In the SAI, the single ratio MCLK/FS = 256 is considered. Mostly, three frequency ranges will be encountered as illustrated in *Table 269*.

Table 269. Example of possible audio frequency sampling range

Input sai_x_ker_ck clock frequency	Most usual audio frequency sampling achievable	MCKDIV[3:0]
192 kHz x 256	192 kHz	MCKDIV[3:0] = 0000
	96 kHz	MCKDIV[3:0] = 0001
	48 kHz	MCKDIV[3:0] = 0010
	16 kHz	MCKDIV[3:0] = 0110
	8 kHz	MCKDIV[3:0] = 1100
44.1 kHz x 256	44.1 kHz	MCKDIV[3:0] = 0000
	22.05 kHz	MCKDIV[3:0] = 0001
	11.025 kHz	MCKDIV[3:0] = 0010
sai_x_ker_ck = MCLK(1)	MCLK	MCKDIV[3:0] = 0000

1. This may happen when the product clock controller selects an external clock source, instead of PLL clock.

The master clock can be generated externally on an I/O pad for external decoders if the corresponding audio block is declared as master with bit NODIV = 0 in the SAI_xCR1 register. In slave, the value set in this last bit is ignored since the clock generator is OFF, and the MCLK_x I/O pin is released for use as a general purpose I/O.

The bit clock is derived from the master clock. The bit clock divider sets the divider factor between the bit clock (SCK_x) and the master clock (MCLK_x) following the formula:

SCK_x = MCLK x (FRL[7:0] +1) / 256

where:

256 is the fixed ratio between MCLK and the audio frequency sampling.

FRL[7:0] is the number of bit clock cycles- 1 in the audio frame, configured in the SAI_xFRCR register.

In master mode it is mandatory that (FRL[7:0] +1) is equal to a number with a power of 2 (refer to *Section 43.3.6: Frame synchronization*) to obtain an even integer number of MCLK_x pulses by bit clock cycle. The 50% duty cycle is guaranteed on the bit clock (SCK_x).

The sai_x_ker_ck clock can also be equal to the bit clock frequency. In this case, NODIV bit in the SAI_xCR1 register should be set and the value inside the MCKDIV divider and the bit clock divider will be ignored. In this case, the number of bits per frame is fully configurable without the need to be equal to a power of two.

The bit clock strobing edge on SCK can be configured by bit CKSTR in the SAI_xCR1 register.

Refer to *Section 43.3.11: SPDIF output* for details on clock generator programming in SPDIF mode.

43.3.9 Internal FIFOs

Each audio block in the SAI has its own FIFO. Depending if the block is defined to be a transmitter or a receiver, the FIFO can be written or read, respectively. There is therefore only one FIFO request linked to FREQ bit in the SAI_xSR register.

An interrupt is generated if FREQIE bit is enabled in the SAI_xIM register. This depends on:

- FIFO threshold setting (FLVL bits in SAI_xCR2)
- Communication direction (transmitter or receiver). Refer to *Interrupt generation in transmitter mode* and *Interrupt generation in reception mode*.

Interrupt generation in transmitter mode

The interrupt generation depends on the FIFO configuration in transmitter mode:

- When the FIFO threshold bits in SAI_xCR2 register are configured as FIFO empty (FTH[2:0] set to 0b000), an interrupt is generated (FREQ bit set by hardware to 1 in SAI_xSR register) if no data are available in SAI_xDR register (FLVL[2:0] bits in SAI_xSR is less than 001b). This Interrupt (FREQ bit in SAI_xSR register) is cleared by hardware when the FIFO is no more empty (FLVL[2:0] bits in SAI_xSR are different from 0b000) i.e one or more data are stored in the FIFO.
- When the FIFO threshold bits in SAI_xCR2 register are configured as FIFO quarter full (FTH[2:0] set to 001b), an interrupt is generated (FREQ bit set by hardware to 1 in SAI_xSR register) if less than a quarter of the FIFO contains data (FLVL[2:0] bits in SAI_xSR are less than 0b010). This Interrupt (FREQ bit in SAI_xSR register) is cleared by hardware when at least a quarter of the FIFO contains data (FLVL[2:0] bits in SAI_xSR are higher or equal to 0b010).
- When the FIFO threshold bits in SAI_xCR2 register are configured as FIFO half full (FTH[2:0] set to 0b010), an interrupt is generated (FREQ bit set by hardware to 1 in SAI_xSR register) if less than half of the FIFO contains data (FLVL[2:0] bits in SAI_xSR are less than 011b). This Interrupt (FREQ bit in SAI_xSR register) is cleared by hardware when at least half of the FIFO contains data (FLVL[2:0] bits in SAI_xSR are higher or equal to 011b).
- When the FIFO threshold bits in SAI_xCR2 register are configured as FIFO three quarter (FTH[2:0] set to 011b), an interrupt is generated (FREQ bit is set by hardware to 1 in SAI_xSR register) if less than three quarters of the FIFO contain data (FLVL[2:0] bits in SAI_xSR are less than 0b100). This Interrupt (FREQ bit in SAI_xSR register) is cleared by hardware when at least three quarters of the FIFO contain data (FLVL[2:0] bits in SAI_xSR are higher or equal to 0b100).
- When the FIFO threshold bits in SAI_xCR2 register are configured as FIFO full (FTH[2:0] set to 0b100), an interrupt is generated (FREQ bit is set by hardware to 1 in SAI_xSR register) if the FIFO is not full (FLVL[2:0] bits in SAI_xSR is less than 101b). This Interrupt (FREQ bit in SAI_xSR register) is cleared by hardware when the FIFO is full (FLVL[2:0] bits in SAI_xSR is equal to 101b value).

Interrupt generation in reception mode

The interrupt generation depends on the FIFO configuration in reception mode:

- When the FIFO threshold bits in SAI_xCR2 register are configured as FIFO empty (FTH[2:0] set to 0b000), an interrupt is generated (FREQ bit is set by hardware to 1 in SAI_xSR register) if at least one data is available in SAI_xDR register(FLVL[2:0] bits in SAI_xSR is higher or equal to 001b). This Interrupt (FREQ bit in SAI_xSR register) is

cleared by hardware when the FIFO becomes empty (FLVL[2:0] bits in SAI_xSR is equal to 0b000) i.e no data are stored in FIFO.

- When the FIFO threshold bits in SAI_xCR2 register are configured as FIFO quarter fully (FTH[2:0] set to 001b), an interrupt is generated (FREQ bit is set by hardware to 1 in SAI_xSR register) if at least one quarter of the FIFO data locations are available (FLVL[2:0] bits in SAI_xSR is higher or equal to 0b010). This Interrupt (FREQ bit in SAI_xSR register) is cleared by hardware when less than a quarter of the FIFO data locations become available (FLVL[2:0] bits in SAI_xSR is less than 0b010).
- When the FIFO threshold bits in SAI_xCR2 register are configured as FIFO half fully (FTH[2:0] set to 0b010 value), an interrupt is generated (FREQ bit is set by hardware to 1 in SAI_xSR register) if at least half of the FIFO data locations are available (FLVL[2:0] bits in SAI_xSR is higher or equal to 011b). This Interrupt (FREQ bit in SAI_xSR register) is cleared by hardware when less than half of the FIFO data locations become available (FLVL[2:0] bits in SAI_xSR is less than 011b).
- When the FIFO threshold bits in SAI_xCR2 register are configured as FIFO three quarter full(FTH[2:0] set to 011b value), an interrupt is generated (FREQ bit is set by hardware to 1 in SAI_xSR register) if at least three quarters of the FIFO data locations are available (FLVL[2:0] bits in SAI_xSR is higher or equal to 0b100). This Interrupt (FREQ bit in SAI_xSR register) is cleared by hardware when the FIFO has less than three quarters of the FIFO data locations avalable(FLVL[2:0] bits in SAI_xSR is less than 0b100).
- When the FIFO threshold bits in SAI_xCR2 register are configured as FIFO full(FTH[2:0] set to 0b100), an interrupt is generated (FREQ bit is set by hardware to 1 in SAI_xSR register) if the FIFO is full (FLVL[2:0] bits in SAI_xSR is equal to 101b). This Interrupt (FREQ bit in SAI_xSR register) is cleared by hardware when the FIFO is not full (FLVL[2:0] bits in SAI_xSR is less than 101b).

Like interrupt generation, the SAI can use the DMA if DMAEN bit in the SAI_xCR1 register is set. The FREQ bit assertion mechanism is the same as the interrupt generation mechanism described above for FREQIE.

Each FIFO is an 8-word FIFO. Each read or write operation from/to the FIFO targets one word FIFO location whatever the access size. Each FIFO word contains one audio slot. FIFO pointers are incremented by one word after each access to the SAI_xDR register.

Data should be right aligned when it is written in the SAI_xDR.

Data received will be right aligned in the SAI_xDR.

The FIFO pointers can be reinitialized when the SAI is disabled by setting bit FFLUSH in the SAI_xCR2 register. If FFLUSH is set when the SAI is enabled the data present in the FIFO will be lost automatically.

43.3.10 AC’97 link controller

The SAI is able to work as an AC’97 link controller. In this protocol:

- The slot number and the slot size are fixed.
- The frame synchronization signal is perfectly defined and has a fixed shape.

To select this protocol, set PRTCFG[1:0] bits in the SAI_xCR1 register to 10. When AC’97 mode is selected, only data sizes of 16 or 20 bits can be used, otherwise the SAI behavior is not guaranteed.

- NBSLOT[3:0] and SLOTSZ[1:0] bits are consequently ignored.
- The number of slots is fixed to 13 slots. The first one is 16-bit wide and all the others are 20-bit wide (data slots).
- FBOFF[4:0] bits in the SAI_xSLOTR register are ignored.
- The SAI_xFRCR register is ignored.
- The MCLK is not used.

The FS signal from the block defined as asynchronous is configured automatically as an output, since the AC’97 controller link drives the FS signal whatever the master or slave configuration.

Figure 478 shows an AC’97 audio frame structure.

Figure 478. AC’97 audio frame

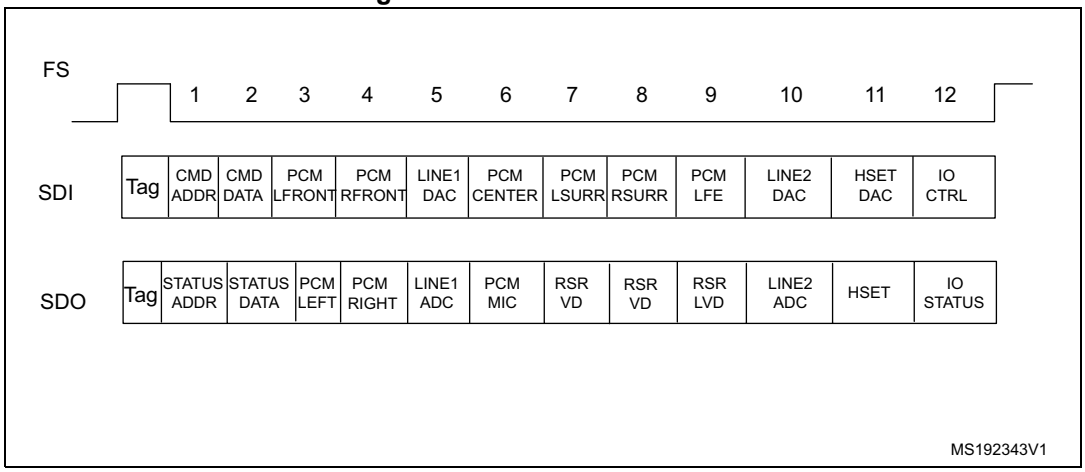

Note: In AC’97 protocol, bit 2 of the tag is reserved (always 0), so bit 2 of the TAG is forced to 0 level whatever the value written in the SAI FIFO.

For more details about tag representation, refer to the AC’97 protocol standard.

One SAI can be used to target an AC’97 point-to-point communication.

Using two SAIs (for devices featuring two embedded SAIs) allows controlling three external AC’97 decoders as illustrated in *Figure 479*.

In SAI1, the audio block A must be declared as asynchronous master transmitter whereas the audio block B is defined to be slave receiver and internally synchronous to the audio block A.

The SAI2 is configured for audio block A and B both synchronous with the external SAI1 in slave receiver mode.

Figure 479. Example of typical AC'97 configuration on devices featuring at least 2 embedded SAIs (three external AC'97 decoders)

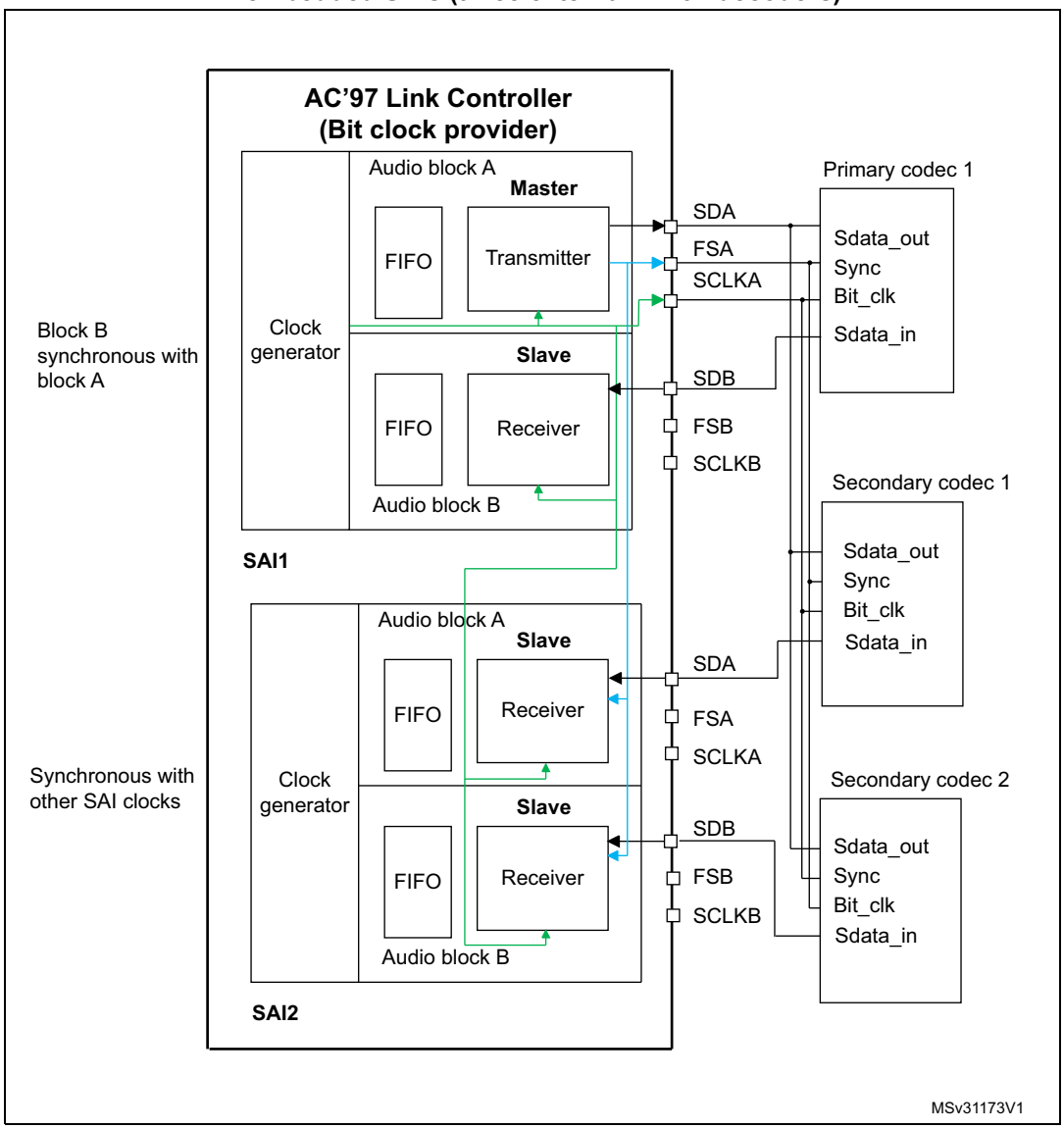

In receiver mode, the SAI acting as an AC'97 link controller requires no FIFO request and so no data storage in the FIFO when the Codec ready bit in the slot 0 is decoded low. If bit CNRDYIE is enabled in the SAI_xIM register, flag CNRDY will be set in the SAI_xSR register and an interrupt is generated. This flag is dedicated to the AC'97 protocol.

Clock generator programming in AC'97 mode

In AC'97 mode, the frame length is fixed at 256 bits, and its frequency shall be set to 48 kHz. The formulas given in *Section 43.3.8: SAI clock generator* shall be used with FRL = 255, in order to generate the proper frame rate (F_{FS_x}).

43.3.11 SPDIF output

The SPDIF interface is available in transmitter mode only. It supports the audio IEC60958.

To select SPDIF mode, set PRTCFG[1:0] bit to 01 in the SAI_xCR1 register.

For SPDIF protocol:

- Only SD data line is enabled.
- FS, SCK, MCLK I/Os pins are left free.
- MODE[1] bit is forced to 0 to select the master mode in order to enable the clock generator of the SAI and manage the data rate on the SD line.
- The data size is forced to 24 bits. The value set in DS[2:0] bits in the SAI_xCR1 register is ignored.
- The clock generator must be configured to define the symbol-rate, knowing that the bit clock should be twice the symbol-rate. The data is coded in Manchester protocol.
- The SAI_xFRCR and SAI_xSLOTR registers are ignored. The SAI is configured internally to match the SPDIF protocol requirements as shown in *Figure 480*.

Figure 480. SPDIF format

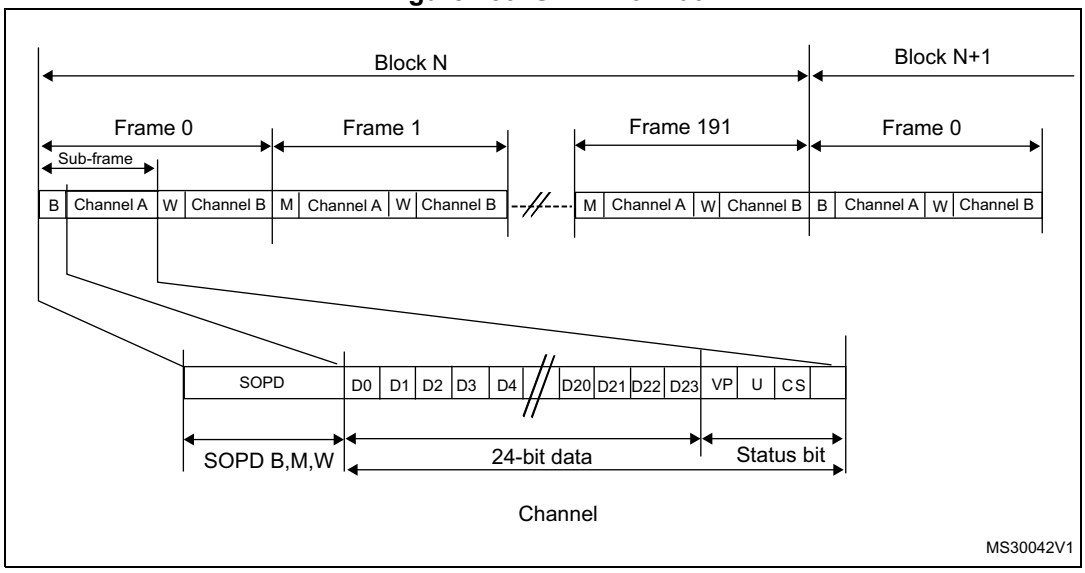

A SPDIF block contains 192 frames. Each frame is composed of two 32-bit sub-frames, generally one for the left channel and one for the right channel. Each sub-frame is composed of a SOPD pattern (4-bit) to specify if the sub-frame is the start of a block (and so is identifying a channel A) or if it is identifying a channel A somewhere in the block, or if it is referring to channel B (see *Table 270*). The next 28 bits of channel information are composed of 24 bits data + 4 status bits.

Table 270. SOPD pattern

SOPD	Preamble coding		Description
	last bit is 0	last bit is 1	
B	11101000	00010111	Channel A data at the start of block
W	11100100	00011011	Channel B data somewhere in the block
M	11100010	00011101	Channel A data

The data stored in SAI_xDR has to be filled as follows:

- SAI_xDR[26:24] contain the Channel status, User and Validity bits.
- SAI_xDR[23:0] contain the 24-bit data for the considered channel.

If the data size is 20 bits, then data shall be mapped on SAI_xDR[23:4].

If the data size is 16 bits, then data shall be mapped on SAI_xDR[23:8].

SAI_xDR[23] always represents the MSB.

Figure 481. SAI_xDR register ordering

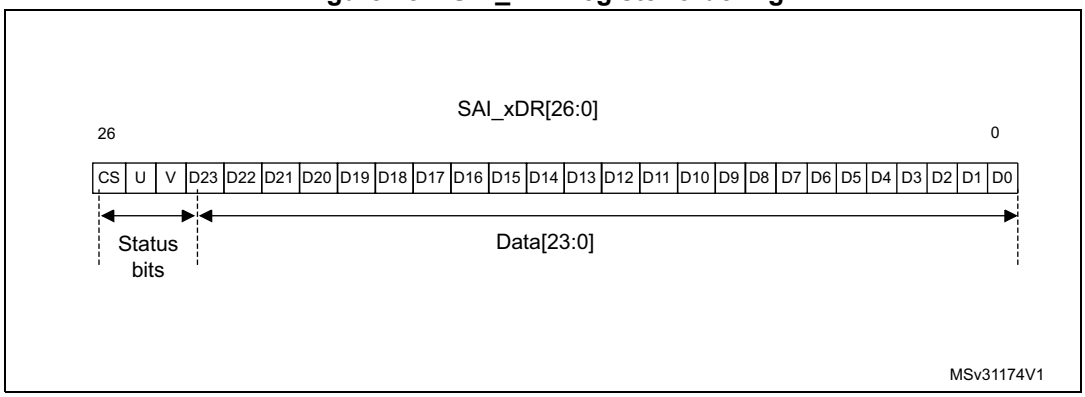

Note: The transfer is performed always with LSB first.

The SAI first sends the adequate preamble for each sub-frame in a block. The SAI_xDR is then sent on the SD line (manchester coded). The SAI ends the sub-frame by transferring the Parity bit calculated as described in *Table 271*.

Table 271. Parity bit calculation

SAI_xDR[26:0]	Parity bit P value transferred
odd number of 0	0
odd number of 1	1

The underrun is the only error flag available in the SAI_xSR register for SPDIF mode since the SAI can only operate in transmitter mode. As a result, the following sequence should be

executed to recover from an underrun error detected via the underrun interrupt or the underrun status bit:

1. Disable the DMA stream (via the DMA peripheral) if the DMA is used.
2. Disable the SAI and check that the peripheral is physically disabled by polling the SAIEN bit in SAI_xCR1 register.
3. Clear the COVRUNDR flag in the SAI_xCLRFR register.
4. Flush the FIFO by setting the FFLUSH bit in SAI_xCR2.

   The software needs to point to the address of the future data corresponding to a start of new block (data for preamble B). If the DMA is used, the DMA source base address pointer should be updated accordingly.
5. Enable again the DMA stream (DMA peripheral) if the DMA used to manage data transfers according to the new source base address.
6. Enable again the SAI by setting SAIEN bit in SAI_xCR1 register.

Clock generator programming in SPDIF generator mode

For the SPDIF generator, the SAI shall provide a bit clock twice faster as the symbol-rate. The table hereafter shows usual examples of symbol rates with respect to the audio sampling rate.

Table 272. Audio sampling frequency versus symbol rates

Audio Sampling Frequencies (F_S)	Symbol-rate
44.1 kHz	2.8224 MHz
48 kHz	3.072 MHz
96 kHz	6.144 MHz
192 kHz	12.288 MHz

More generally, the relationship between the audio sampling frequency (F_S) and the bit clock rate (F_{SCK_X}) is given by the formula:

$$F_S = \frac{F_{SCK_x}}{128}$$

The bit clock rate is obtained as follows:

$$F_{SCK_x} = F_{SAI_CK_x}$$

Note: The above formulas are valid only if NODIV is set to 1 in SAI_ACR1 register.

43.3.12 Specific features

The SAI interface embeds specific features which can be useful depending on the audio protocol selected. These functions are accessible through specific bits of the SAI_xCR2 register.

Mute mode

The mute mode can be used when the audio subblock is a transmitter or a receiver.

Audio subblock in transmission mode

In transmitter mode, the mute mode can be selected at anytime. The mute mode is active for entire audio frames. The MUTE bit in the SAI_xCR2 register enables the mute mode when it is set during an ongoing frame.

The mute mode bit is strobed only at the end of the frame. If it is set at this time, the mute mode is active at the beginning of the new audio frame and for a complete frame, until the next end of frame. The bit is then strobed to determine if the next frame will still be a mute frame.

If the number of slots set through NBSLOT[3:0] bits in the SAI_xSLOTR register is lower than or equal to 2, it is possible to specify if the value sent in mute mode is 0 or if it is the last value of each slot. The selection is done via MUTEVAL bit in the SAI_xCR2 register.

If the number of slots set in NBSLOT[3:0] bits in the SAI_xSLOTR register is greater than 2, MUTEVAL bit in the SAI_xCR2 is meaningless as 0 values are sent on each bit on each slot.

The FIFO pointers are still incremented in mute mode. This means that data present in the FIFO and for which the mute mode is requested are discarded.

Audio subblock in reception mode

In reception mode, it is possible to detect a mute mode sent from the external transmitter when all the declared and valid slots of the audio frame receive 0 for a given consecutive number of audio frames (MUTECNT[5:0] bits in the SAI_xCR2 register).

When the number of MUTE frames is detected, the MUTEDET flag in the SAI_xSR register is set and an interrupt can be generated if MUTEDETIE bit is set in SAI_xCR2.

The mute frame counter is cleared when the audio subblock is disabled or when a valid slot receives at least one data in an audio frame. The interrupt is generated just once, when the counter reaches the value specified in MUTECNT[5:0] bits. The interrupt event is then reinitialized when the counter is cleared.

Note: The mute mode is not available for SPDIF audio blocks.

Mono/stereo mode

In transmitter mode, the mono mode can be addressed, without any data preprocessing in memory, assuming the number of slots is equal to 2 (NBSLOT[3:0] = 0001 in SAI_xSLOTR). In this case, the access time to and from the FIFO will be reduced by 2 since the data for slot 0 is duplicated into data slot 1.

To enable the mono mode,

1. Set MONO bit to 1 in the SAI_xCR1 register.
2. Set NBSLOT to 1 and SLOTEN to 3 in SAI_xSLOTR.

In reception mode, the MONO bit can be set and is meaningful only if the number of slots is equal to 2 as in transmitter mode. When it is set, only slot 0 data will be stored in the FIFO. The data belonging to slot 1 will be discarded since, in this case, it is supposed to be the same as the previous slot. If the data flow in reception mode is a real stereo audio flow with a distinct and different left and right data, the MONO bit is meaningless. The conversion from the output stereo file to the equivalent mono file is done by software.

Companding mode

Telecommunication applications can require to process the data to be transmitted or received using a data companding algorithm.

Depending on the COMP[1:0] bits in the SAI_xCR2 register (used only when Free protocol mode is selected), the application software can choose to process or not the data before sending it on SD serial output line (compression) or to expand the data after the reception on SD serial input line (expansion) as illustrated in *Figure 482*. The two companding modes supported are the µ-Law and the A-Law log which are a part of the CCITT G.711 recommendation.

The companding standard used in the United States and Japan is the µ-Law. It supports 14 bits of dynamic range (COMP[1:0] = 10 in the SAI_xCR2 register).

The European companding standard is A-Law and supports 13 bits of dynamic range (COMP[1:0] = 11 in the SAI_xCR2 register).

Both µ-Law or A-Law companding standard can be computed based on 1's complement or 2's complement representation depending on the CPL bit setting in the SAI_xCR2 register.

In µ-Law and A-Law standards, data are coded as 8 bits with MSB alignment. Companded data are always 8-bit wide. For this reason, DS[2:0] bits in the SAI_xCR1 register will be forced to 010 when the SAI audio block is enabled (SAIEN bit = 1 in the SAI_xCR1 register) and when one of these two companding modes selected through the COMP[1:0] bits.

If no companding processing is required, COMP[1:0] bits should be kept clear.

Figure 482. Data companding hardware in an audio block in the SAI

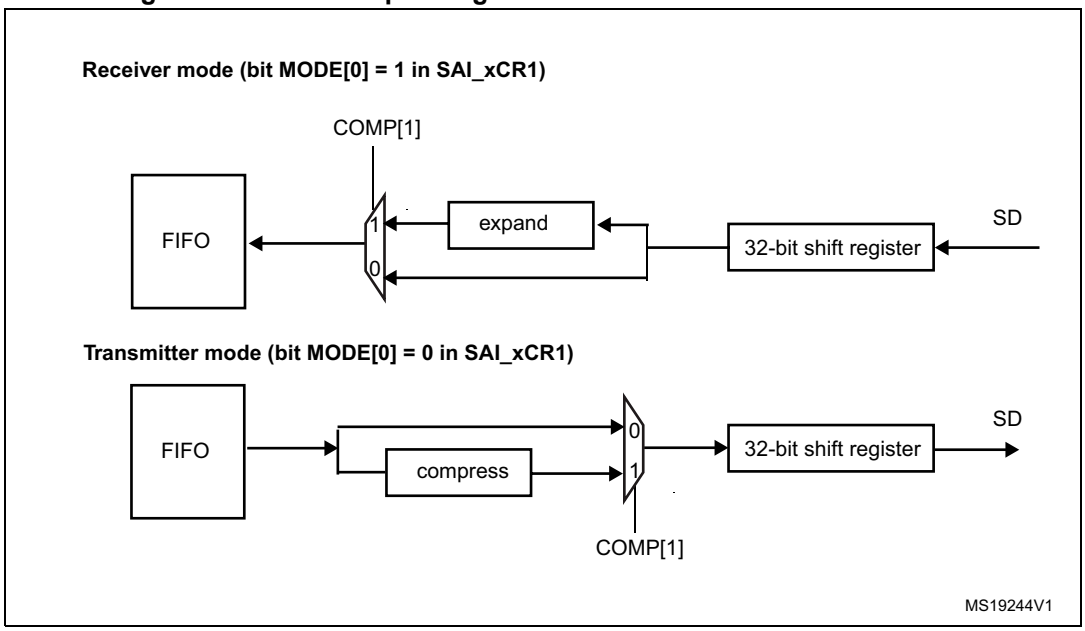

1. Not applicable when AC'97 or SPDIF are selected.

Expansion and compression mode are automatically selected through the SAI_xCR2:

- If the SAI audio block is configured to be a transmitter, and if the COMP[1] bit is set in the SAI_xCR2 register, the compression mode will be applied.
- If the SAI audio block is declared as a receiver, the expansion algorithm will be applied.

Output data line management on an inactive slot

In transmitter mode, it is possible to choose the behavior of the SD line output when an inactive slot is sent on the data line (via TRIS bit).

- Either the SAI forces 0 on the SD output line when an inactive slot is transmitted, or
- The line is released in HI-z state at the end of the last bit of data transferred, to release the line for other transmitters connected to this node.

It is important to note that the two transmitters cannot attempt to drive the same SD output pin simultaneously, which could result in a short circuit. To ensure a gap between transmissions, if the data is lower than 32-bit, the data can be extended to 32-bit by setting bit SLOTSZ[1:0] = 10 in the SAI_xSLOTR register. The SD output pin will then be tri-stated at the end of the LSB of the active slot (during the padding to 0 phase to extend the data to 32-bit) if the following slot is declared inactive.

In addition, if the number of slots multiplied by the slot size is lower than the frame length, the SD output line will be tri-stated when the padding to 0 is done to complete the audio frame.

Figure 483 illustrates these behaviors.

Figure 483. Tristate strategy on SD output line on an inactive slot

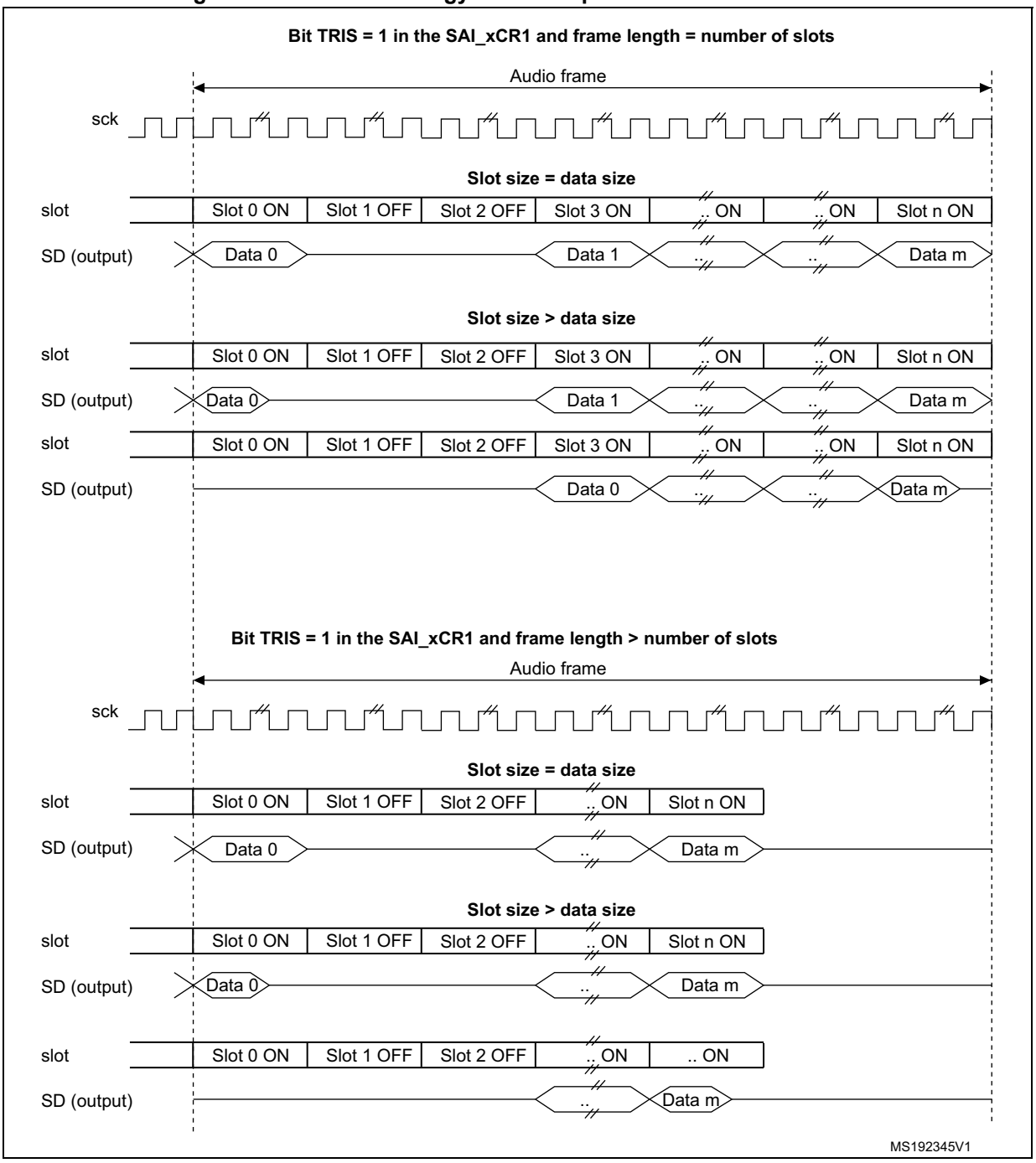

When the selected audio protocol uses the FS signal as a start of frame and a channel side identification (bit FSDEF = 1 in the SAI_xFRCR register), the tristate mode is managed according to *Figure 484* (where bit TRIS in the SAI_xCR1 register = 1, and FSDEF=1, and half frame length is higher than number of slots/2, and NBSLOT=6).

Figure 484. Tristate on output data line in a protocol like I2S

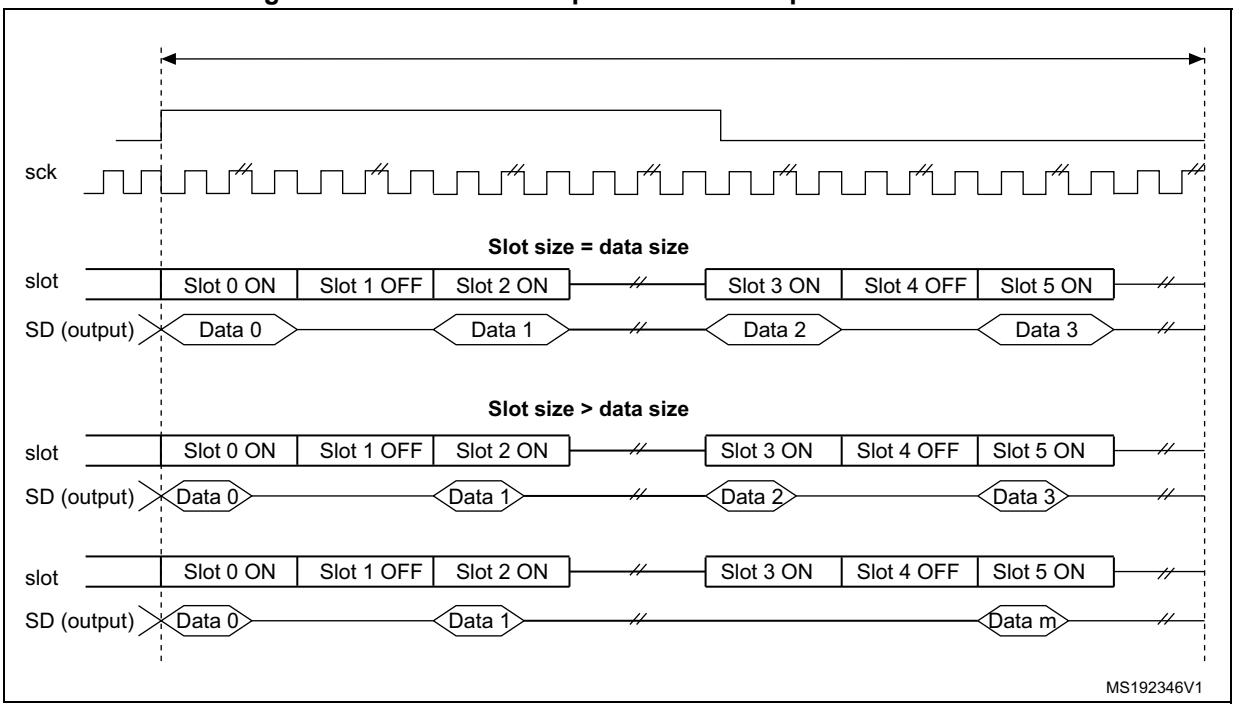

If the TRIS bit in the SAI_xCR2 register is cleared, all the High impedance states on the SD output line on *Figure 483* and *Figure 484* are replaced by a drive with a value of 0.

43.3.13 Error flags

The SAI implements the following error flags:

- FIFO overrun/underrun
- Anticipated frame synchronization detection
- Late frame synchronization detection
- Codec not ready (AC'97 exclusively)
- Wrong clock configuration in master mode.

FIFO overrun/underrun (OVRUDR)

The FIFO overrun/underrun bit is called OVRUDR in the SAI_xSR register.

The overrun or underrun errors share the same bit since an audio block can be either receiver or transmitter and each audio block in a given SAI has its own SAI_xSR register.

Overrun

When the audio block is configured as receiver, an overrun condition may appear if data are received in an audio frame when the FIFO is full and not able to store the received data. In this case, the received data are lost, the flag OVRUDR in the SAI_xSR register is set and an interrupt is generated if OVRUDRIE bit is set in the SAI_xIM register. The slot number, from which the overrun occurs, is stored internally. No more data will be stored into the FIFO until it becomes free to store new data. When the FIFO has at least one data free, the SAI audio block receiver will store new data (from new audio frame) from the slot number which was stored internally when the overrun condition was detected. This avoids data slot de-alignment in the destination memory (refer to *Figure 485*).

The OVRUDR flag is cleared when COVRUDR bit is set in the SAI_xCLRFR register.

Figure 485. Overrun detection error

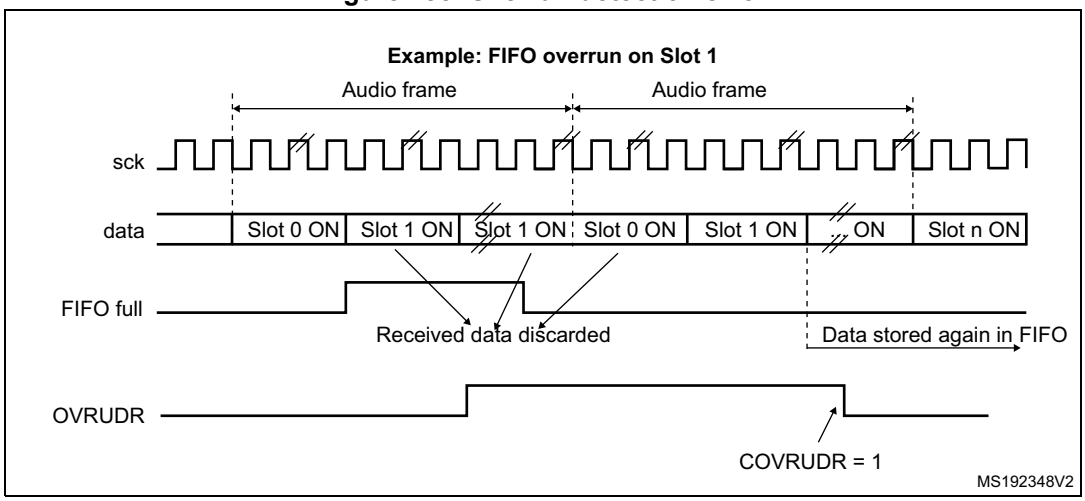

Underrun

An underrun may occur when the audio block in the SAI is a transmitter and the FIFO is empty when data need to be transmitted. If an underrun is detected, the slot number for which the event occurs is stored and MUTE value (00) is sent until the FIFO is ready to transmit the data corresponding to the slot for which the underrun was detected (refer to *Figure 486*). This avoids desynchronization between the memory pointer and the slot in the audio frame.

The underrun event sets the OVRUDR flag in the SAI_xSR register and an interrupt is generated if the OVRUDRIE bit is set in the SAI_xIM register. To clear this flag, set COVRUDR bit in the SAI_xCLRFR register.

The underrun event can occur when the audio subblock is configured as master or slave.

Figure 486. FIFO underrun event

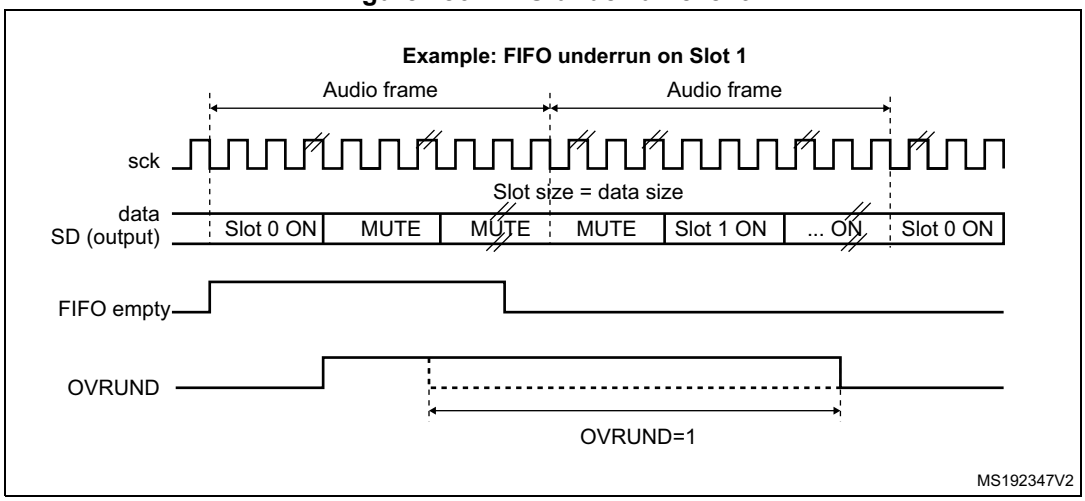

Anticipated frame synchronization detection (AFSDET)

The AFSDET flag is used only in slave mode. It is never asserted in master mode. It indicates that a frame synchronization (FS) has been detected earlier than expected since the frame length, the frame polarity, the frame offset are defined and known.

Anticipated frame detection sets the AFSDET flag in the SAI_xSR register.

This detection has no effect on the current audio frame which is not sensitive to the anticipated FS. This means that “parasitic” events on signal FS are flagged without any perturbation of the current audio frame.

An interrupt is generated if the AFSDETIE bit is set in the SAI_xIM register. To clear the AFSDET flag, CAFSDET bit must be set in the SAI_xCLRFR register.

To resynchronize with the master after an anticipated frame detection error, four steps are required:

1. Disable the SAI block by resetting SAIEN bit in SAI_xCR1 register. To make sure the SAI is disabled, read back the SAIEN bit and check it is set to 0.
2. Flush the FIFO via FFLUS bit in SAI_xCR2 register.
3. Enable again the SAI peripheral (SAIEN bit set to 1).
4. The SAI block will wait for the assertion on FS to restart the synchronization with master.

Note: The AFSDET flag is not asserted in AC’97 mode since the SAI audio block acts as a link controller and generates the FS signal even when declared as slave. It has no meaning in SPDIF mode since the FS signal is not used.

Late frame synchronization detection

The LFSDET flag in the SAI_xSR register can be set only when the SAI audio block operates as a slave. The frame length, the frame polarity and the frame offset configuration are known in register SAI_xFRCR.

If the external master does not send the FS signal at the expecting time thus generating the signal too late, the LFSDET flag is set and an interrupt is generated if LFSDETIE bit is set in the SAI_xIM register.

The LFSDET flag is cleared when CLFSDET bit is set in the SAI_xCLRFR register.

The late frame synchronization detection flag is set when the corresponding error is detected. The SAI needs to be resynchronized with the master (see sequence described in *Anticipated frame synchronization detection (AFSDET)*).

In a noisy environment, glitches on the SCK clock may be wrongly detected by the audio block state machine and shift the SAI data at a wrong frame position. This event can be detected by the SAI and reported as a late frame synchronization detection error.

There is no corruption if the external master is not managing the audio data frame transfer in continuous mode, which should not be the case in most applications. In this case, the LFSDET flag will be set.

Note: The LFSDET flag is not asserted in AC’97 mode since the SAI audio block acts as a link controller and generates the FS signal even when declared as slave. It has no meaning in SPDIF mode since the signal FS is not used by the protocol.

Codec not ready (CNRDY AC'97)

The CNRDY flag in the SAI_xSR register is relevant only if the SAI audio block is configured to operate in AC'97 mode (PRTCFG[1:0] = 10 in the SAI_xCR1 register). If CNRDYIE bit is set in the SAI_xIM register, an interrupt is generated when the CNRDY flag is set.

CNRDY is asserted when the Codec is not ready to communicate during the reception of the TAG 0 (slot0) of the AC'97 audio frame. In this case, no data will be automatically stored into the FIFO since the Codec is not ready, until the TAG 0 indicates that the Codec is ready. All the active slots defined in the SAI_xSLOTR register will be captured when the Codec is ready.

To clear CNRDY flag, CCNRDY bit must be set in the SAI_xCLRFR register.

Wrong clock configuration in master mode (with NODIV = 0)

When the audio block operates as a master (MODE[1] = 0) and NODIV bit is equal to 0, the WCKCFG flag is set as soon as the SAI is enabled if the following conditions are met:

- (FRL+1) is not a power of 2, and
- (FRL+1) is not between 8 and 256.

MODE, NODIV, and SAIEN bits belong to SAI_xCR1 register and FRL to SAI_xFRCR register.

If WCKCFGIE bit is set, an interrupt is generated when WCKCFG flag is set in the SAI_xSR register. To clear this flag, set CWCKCFG bit in the SAI_xCLRFR register.

When WCKCFG bit is set, the audio block is automatically disabled, thus performing a hardware clear of SAIEN bit.

43.3.14 Disabling the SAI

The SAI audio block can be disabled at any moment by clearing SAIEN bit in the SAI_xCR1 register. All the already started frames are automatically completed before the SAI is stops working. SAIEN bit remains High until the SAI is completely switched-off at the end of the current audio frame transfer.

If an audio block in the SAI operates synchronously with the other one, the one which is the master must be disabled first.

43.3.15 SAI DMA interface

To free the CPU and to optimize bus bandwidth, each SAI audio block has an independent DMA interface to read/write from/to the SAI_xDR register (to access the internal FIFO). There is one DMA channel per audio subblock supporting basic DMA request/acknowledge protocol.

To configure the audio subblock for DMA transfer, set DMAEN bit in the SAI_xCR1 register. The DMA request is managed directly by the FIFO controller depending on the FIFO threshold level (for more details refer to *Section 43.3.9: Internal FIFOs*). DMA transfer direction is linked to the SAI audio subblock configuration:

- If the audio block operates as a transmitter, the audio block FIFO controller outputs a DMA request to load the FIFO with data written in the SAI_xDR register.
- If the audio block is operates as a receiver, the DMA request is related to read operations from the SAI_xDR register.

Follow the sequence below to configure the SAI interface in DMA mode:

1. Configure SAI and FIFO threshold levels to specify when the DMA request will be launched.
2. Configure SAI DMA channel.
3. Enable the DMA.
4. Enable the SAI interface.

Note: Before configuring the SAI block, the SAI DMA channel must be disabled.

43.4 SAI interrupts

The SAI supports 7 interrupt sources as shown in *Table 273*.

Table 273. SAI interrupt sources

Interrupt acronym	Interrupt source	Interrupt group	Audio block mode	Interrupt enable	Interrupt clear
SAI	FREQ	FREQ	Master or slave Receiver or transmitter	FREQIE in SAI_xIM register	Depends on: – FIFO threshold setting (FLVL bits in SAI_xCR2) – Communication direction (transmitter or receiver) For more details refer to *Section 43.3.9: Internal FIFOs*
	OVRUDR	ERROR	Master or slave Receiver or transmitter	OVRUDRIE in SAI_xIM register	COVRUDR = 1 in SAI_xCLRFR register
	AFSDET	ERROR	Slave (not used in AC'97 mode and SPDIF mode)	AFSDETIE in SAI_xIM register	CAFSDET = 1 in SAI_xCLRFR register
	LFSDET	ERROR	Slave (not used in AC'97 mode and SPDIF mode)	LFSDETIE in SAI_xIM register	CLFSDET = 1 in SAI_xCLRFR register
	CNRDY	ERROR	Slave (only in AC'97 mode)	CNRDYIE in SAI_xIM register	CCNRDY = 1 in SAI_xCLRFR register
	MUTEDET	MUTE	Master or slave Receiver mode only	MUTEDETIE in SAI_xIM register	CMUTEDET = 1 in SAI_xCLRFR register
	WCKCFG	ERROR	Master with NODIV = 0 in SAI_xCR1 register	WCKCFGIE in SAI_xIM register	CWCKCFG = 1 in SAI_xCLRFR register

Follow the sequence below to enable an interrupt:

1. Disable SAI interrupt.
2. Configure SAI.
3. Configure SAI interrupt source.
4. Enable SAI.

43.5 SAI registers

The peripheral registers have to be accessed by words (32 bits).

43.5.1 SAI global configuration register (SAI_GCR)

Address offset: 0x00

Reset value: 0x0000 0000

31	30	29	28	27	26	25	24	23	22	21	20	19	18	17	16
Res.	Res.	Res.	Res.	Res.	Res.	Res.	Res.	Res.	Res.	Res.	Res.	Res.	Res.	Res.	Res.

15	14	13	12	11	10	9	8	7	6	5	4	3	2	1	0
Res.	Res.	Res.	Res.	Res.	Res.	Res.	Res.	Res.	Res.	SYNCOUT[1:0]		Res.	Res.	SYNCIN[1:0]	
										rw	rw			rw	rw

Bits 31:6 Reserved, must be kept at reset value.

Bits 5:4 **SYNCOUT[1:0]**: Synchronization outputs

These bits are set and cleared by software.

00: No synchronization output signals. SYNCOUT[1:0] should be configured as “No synchronization output signals” when audio block is configured as SPDIF

01: Block A used for further synchronization for others SAI

10: Block B used for further synchronization for others SAI

11: Reserved. These bits must be set when both audio block (A and B) are disabled.

Bits 3:2 Reserved, must be kept at reset value.

Bits 1:0 **SYNCIN[1:0]**: Synchronization inputs

These bits are set and cleared by software.

Refer to *Table 268: External synchronization selection* for information on how to program this field.

These bits must be set when both audio blocks (A and B) are disabled.

They are meaningful if one of the two audio blocks is defined to operate in synchronous mode with an external SAI (SYNCEN[1:0] = 10 in SAI_ACR1 or in SAI_BCR1 registers).

43.5.2 SAI configuration register 1 (SAI_ACR1)

Address offset: 0x004

Reset value: 0x0000 0040

31	30	29	28	27	26	25	24	23	22	21	20	19	18	17	16
Res.	Res.	Res.	Res.	Res.	Res.	Res.	Res.	MCKDIV[3:0]				NODIV	Res.	DMAEN	SAIEN
								rw	rw	rw	rw	rw		rw	rw

15	14	13	12	11	10	9	8	7	6	5	4	3	2	1	0
Res.	Res.	OUTDRIV	MONO	SYNCEN[1:0]		CKSTR	LSBFIRST	DS[2:0]			Res.	PRTCFG[1:0]		MODE[1:0]	
		rw	rw	rw	rw	rw	rw	rw	rw	rw		rw	rw	rw	rw

Bits 31:24 Reserved, must be kept at reset value.

Bits 23:20 MCKDIV[3:0]: Master clock divider

These bits are set and cleared by software. These bits are meaningless when the audio block operates in slave mode. They have to be configured when the audio block is disabled.

0000: Divides by 1 the master clock input.

Others: the master clock frequency is calculated accordingly to the following formula:

$$F_{SCK_x} = \frac{F_{sai_x_ker_ck}}{MCKDIV \times 2}$$

Bit 19 **NODIV:** No divider

This bit is set and cleared by software.

0: Master clock generator is enabled

1: No divider used in the clock generator (in this case Master Clock Divider bit has no effect)

Bit 18 Reserved, must be kept at reset value.

Bit 17 **DMAEN**: DMA enable

This bit is set and cleared by software.

0: DMA disabled

1: DMA enabled

Note: Since the audio block defaults to operate as a transmitter after reset, the MODE[1:0] bits must be configured before setting DMAEN to avoid a DMA request in receiver mode.

Bit 16 **SAIEN**: Audio block enable

This bit is set by software.

To switch off the audio block, the application software must program this bit to 0 and poll the bit till it reads back 0, meaning that the block is completely disabled. Before setting this bit to 1, check that it is set to 0, otherwise the enable command will not be taken into account.

This bit allows controlling the state of the SAI audio block. If it is disabled when an audio frame transfer is ongoing, the ongoing transfer completes and the cell is fully disabled at the end of this audio frame transfer.

0: SAI audio block disabled

1: SAI audio block enabled.

Note: When the SAI block (A or B) is configured in master mode, the clock must be present on the SAI block input before setting SAIEN bit.

Bits 15:14 Reserved, must be kept at reset value.

Bit 13 **OUTDRIV**: Output drive

This bit is set and cleared by software.

0: Audio block output driven when SAIEN is set

1: Audio block output driven immediately after the setting of this bit.

Note: This bit has to be set before enabling the audio block and after the audio block configuration.

Bit 12 **MONO**: Mono mode

This bit is set and cleared by software. It is meaningful only when the number of slots is equal to 2. When the mono mode is selected, slot 0 data are duplicated on slot 1 when the audio block operates as a transmitter. In reception mode, the slot1 is discarded and only the data received from slot 0 are stored. Refer to *Section : Mono/stereo mode* for more details.

0: Stereo mode

1: Mono mode.

Bits 11:10 **SYNCEN[1:0]:** Synchronization enable

These bits are set and cleared by software. They must be configured when the audio subblock is disabled.

00: audio subblock in asynchronous mode.

01: audio subblock is synchronous with the other internal audio subblock. In this case, the audio subblock must be configured in slave mode

10: audio subblock is synchronous with an external SAI embedded peripheral. In this case the audio subblock should be configured in Slave mode.

11: Reserved

Note: The audio subblock should be configured as asynchronous when SPDIF mode is enabled.

Bit 9 **CKSTR:** Clock strobing edge

This bit is set and cleared by software. It must be configured when the audio block is disabled. This bit has no meaning in SPDIF audio protocol.

0: Signals generated by the SAI change on SCK rising edge, while signals received by the SAI are sampled on the SCK falling edge.

1: Signals generated by the SAI change on SCK falling edge, while signals received by the SAI are sampled on the SCK rising edge.

Bit 8 **LSBFIRST:** Least significant bit first

This bit is set and cleared by software. It must be configured when the audio block is disabled. This bit has no meaning in AC’97 audio protocol since AC’97 data are always transferred with the MSB first. This bit has no meaning in SPDIF audio protocol since in SPDIF data are always transferred with LSB first.

0: Data are transferred with MSB first

1: Data are transferred with LSB first

Bits 7:5 **DS[2:0]:** Data size

These bits are set and cleared by software. These bits are ignored when the SPDIF protocols are selected (bit PRTCFG[1:0]), because the frame and the data size are fixed in such case. When the companding mode is selected through COMP[1:0] bits, DS[1:0] are ignored since the data size is fixed to 8 bits by the algorithm.

These bits must be configured when the audio block is disabled.

000: Reserved

001: Reserved

010: 8 bits

011: 10 bits

100: 16 bits

101: 20 bits

110: 24 bits

111: 32 bits

Bit 4 Reserved, must be kept at reset value.

Bits 3:2 **PRTCFG[1:0]:** Protocol configuration

These bits are set and cleared by software. These bits have to be configured when the audio block is disabled.

00: Free protocol. Free protocol allows to use the powerful configuration of the audio block to address a specific audio protocol (such as I2S, LSB/MSB justified, TDM, PCM/DSP...) by setting most of the configuration register bits as well as frame configuration register.

01: SPDIF protocol

10: AC'97 protocol

11: Reserved

Bits 1:0 **MODE[1:0]:** SAIx audio block mode

These bits are set and cleared by software. They must be configured when SAIx audio block is disabled.

00: Master transmitter

01: Master receiver

10: Slave transmitter

11: Slave receiver

Note: When the audio block is configured in SPDIF mode, the master transmitter mode is forced (MODE[1:0] = 00).

43.5.3 SAI configuration register 1 (SAI_BCR1)

Address offset: 0x024

Reset value: 0x0000 0040

31	30	29	28	27	26	25	24	23	22	21	20	19	18	17	16
Res.	Res.	Res.	Res.	Res.	Res.	Res.	Res.	MCKDIV[3:0]				NODIV	Res.	DMAEN	SAIEN
								rw	rw	rw	rw	rw		rw	rw

15	14	13	12	11	10	9	8	7	6	5	4	3	2	1	0
Res.	Res.	OUTDRIV	MONO	SYNCEN[1:0]		CKSTR	LSBFIRST	DS[2:0]			Res.	PRTCFG[1:0]		MODE[1:0]	
		rw	rw	rw	rw	rw	rw	rw	rw	rw		rw	rw	rw	rw

Bits 31:24 Reserved, must be kept at reset value.

Bits 23:20 MCKDIV[3:0]: Master clock divider

These bits are set and cleared by software. These bits are meaningless when the audio block operates in slave mode. They have to be configured when the audio block is disabled.

0000: Divides by 1 the master clock input.

Others: the master clock frequency is calculated accordingly to the following formula:

$$F_{SCK_x} = \frac{F_{sai_x_ker_ck}}{MCKDIV \times 2}$$

Bit 19 **NODIV:** No divider

This bit is set and cleared by software.

0: Master clock generator is enabled

1: No divider used in the clock generator (in this case Master Clock Divider bit has no effect)

Bit 18 Reserved, must be kept at reset value.

Bit 17 **DMAEN**: DMA enable

This bit is set and cleared by software.

0: DMA disabled

1: DMA enabled

Note: Since the audio block defaults to operate as a transmitter after reset, the MODE[1:0] bits must be configured before setting DMAEN to avoid a DMA request in receiver mode.

Bit 16 **SAIEN**: Audio block enable

This bit is set by software.

To switch off the audio block, the application software must program this bit to 0 and poll the bit till it reads back 0, meaning that the block is completely disabled. Before setting this bit to 1, check that it is set to 0, otherwise the enable command will not be taken into account.

This bit allows controlling the state of the SAI audio block. If it is disabled when an audio frame transfer is ongoing, the ongoing transfer completes and the cell is fully disabled at the end of this audio frame transfer.

0: SAI audio block disabled

1: SAI audio block enabled.

Note: When the SAI block (A or B) is configured in master mode, the clock must be present on the SAI block input before setting SAIEN bit.

Bits 15:14 Reserved, must be kept at reset value.

Bit 13 **OUTDRIV**: Output drive

This bit is set and cleared by software.

0: Audio block output driven when SAIEN is set

1: Audio block output driven immediately after the setting of this bit.

Note: This bit has to be set before enabling the audio block and after the audio block configuration.

Bit 12 **MONO**: Mono mode

This bit is set and cleared by software. It is meaningful only when the number of slots is equal to 2. When the mono mode is selected, slot 0 data are duplicated on slot 1 when the audio block operates as a transmitter. In reception mode, the slot1 is discarded and only the data received from slot 0 are stored. Refer to *Section : Mono/stereo mode* for more details.

0: Stereo mode

1: Mono mode.

Bits 11:10 **SYNCEN[1:0]:** Synchronization enable

These bits are set and cleared by software. They must be configured when the audio subblock is disabled.

00: audio subblock in asynchronous mode.

01: audio subblock is synchronous with the other internal audio subblock. In this case, the audio subblock must be configured in slave mode

10: audio subblock is synchronous with an external SAI embedded peripheral. In this case the audio subblock should be configured in Slave mode.

11: Reserved

Note: The audio subblock should be configured as asynchronous when SPDIF mode is enabled.

Bit 9 **CKSTR:** Clock strobing edge

This bit is set and cleared by software. It must be configured when the audio block is disabled. This bit has no meaning in SPDIF audio protocol.

0: Signals generated by the SAI change on SCK rising edge, while signals received by the SAI are sampled on the SCK falling edge.

1: Signals generated by the SAI change on SCK falling edge, while signals received by the SAI are sampled on the SCK rising edge.

Bit 8 **LSBFIRST:** Least significant bit first

This bit is set and cleared by software. It must be configured when the audio block is disabled. This bit has no meaning in AC'97 audio protocol since AC'97 data are always transferred with the MSB first. This bit has no meaning in SPDIF audio protocol since in SPDIF data are always transferred with LSB first.

0: Data are transferred with MSB first

1: Data are transferred with LSB first

Bits 7:5 **DS[2:0]:** Data size

These bits are set and cleared by software. These bits are ignored when the SPDIF protocols are selected (bit PRTCFG[1:0]), because the frame and the data size are fixed in such case. When the companding mode is selected through COMP[1:0] bits, DS[1:0] are ignored since the data size is fixed to 8 bits by the algorithm.

These bits must be configured when the audio block is disabled.

000: Reserved

001: Reserved

010: 8 bits

011: 10 bits

100: 16 bits

101: 20 bits

110: 24 bits

111: 32 bits

Bit 4 Reserved, must be kept at reset value.

Bits 3:2 **PRTCFG[1:0]:** Protocol configuration

These bits are set and cleared by software. These bits have to be configured when the audio block is disabled.

00: Free protocol. Free protocol allows to use the powerful config uration of the audio block to address a specific audio protocol (such as I2S, LSB/MSB justified, TDM, PCM/DSP...) by setting most of the configuration register bits as well as frame configuration register.

01: SPDIF protocol

10: AC'97 protocol

11: Reserved

Bits 1:0 **MODE[1:0]:** SAIx audio block mode

These bits are set and cleared by software. They must be configured when SAIx audio block is disabled.

00: Master transmitter

01: Master receiver

10: Slave transmitter

11: Slave receiver

Note: When the audio block is configured in SPDIF mode, the master transmitter mode is forced (MODE[1:0] = 00). In Master transmitter mode, the audio block starts generating the FS and the clocks immediately.

43.5.4 SAI configuration register 2 (SAI_ACR2)

Address offset: 0x008

Reset value: 0x0000 0000

31	30	29	28	27	26	25	24	23	22	21	20	19	18	17	16
Res.	Res.	Res.	Res.	Res.	Res.	Res.	Res.	Res.	Res.	Res.	Res.	Res.	Res.	Res.	Res.

15	14	13	12	11	10	9	8	7	6	5	4	3	2	1	0
COMP[1:0]		CPL	MUTECNT[5:0]						MUTE VAL	MUTE	TRIS	F FLUSH	FTH[2:0]		
rw	rw	rw	rw	rw	rw	rw	rw	rw	rw	rw	rw	w	rw	rw	rw

Bits 31:16 Reserved, must be kept at reset value.

Bits 15:14 **COMP[1:0]**: Companding mode.

These bits are set and cleared by software. The µ-Law and the A-Law log are a part of the CCITT G.711 recommendation, the type of complement that will be used depends on *CPL bit*.
The data expansion or data compression are determined by the state of bit MODE[0].
The data compression is applied if the audio block is configured as a transmitter.
The data expansion is automatically applied when the audio block is configured as a receiver.
Refer to *Section : Companding mode* for more details.
00: No companding algorithm
01: Reserved.
10: µ-Law algorithm
11: A-Law algorithm

Note: Companding mode is applicable only when Free protocol mode is selected.

Bit 13 **CPL**: Complement bit.

This bit is set and cleared by software.
It defines the type of complement to be used for companding mode
0: 1's complement representation.
1: 2's complement representation.

Note: This bit has effect only when the companding mode is µ-Law algorithm or A-Law algorithm.

Bits 12:7 **MUTECNT[5:0]**: Mute counter.

These bits are set and cleared by software. They are used only in reception mode.
The value set in these bits is compared to the number of consecutive mute frames detected in reception. When the number of mute frames is equal to this value, the flag MUTEDET will be set and an interrupt will be generated if bit MUTEDETIE is set.
Refer to *Section : Mute mode* for more details.

Bit 6 **MUTEVAL**: Mute value.

This bit is set and cleared by software.It must be written before enabling the audio block: SAIEN. This bit is meaningful only when the audio block operates as a transmitter, the number of slots is lower or equal to 2 and the MUTE bit is set.

If more slots are declared, the bit value sent during the transmission in mute mode is equal to 0, whatever the value of MUTEVAL.

if the number of slot is lower or equal to 2 and MUTEVAL = 1, the MUTE value transmitted for each slot is the one sent during the previous frame.

Refer to *Section : Mute mode* for more details.

0: Bit value 0 is sent during the mute mode.

1: Last values are sent during the mute mode.

Note: This bit is meaningless and should not be used for SPDIF audio blocks.

Bit 5 **MUTE:** Mute.

This bit is set and cleared by software. It is meaningful only when the audio block operates as a transmitter. The MUTE value is linked to value of MUTEVAL if the number of slots is lower or equal to 2, or equal to 0 if it is greater than 2.

Refer to *Section : Mute mode* for more details.

0: No mute mode.

1: Mute mode enabled.

Note: This bit is meaningless and should not be used for SPDIF audio blocks.

Bit 4 **TRIS**: Tristate management on data line.

This bit is set and cleared by software. It is meaningful only if the audio block is configured as a transmitter. This bit is not used when the audio block is configured in SPDIF mode. It should be configured when SAI is disabled.

Refer to *Section : Output data line management on an inactive slot* for more details.

0: SD output line is still driven by the SAI when a slot is inactive.

1: SD output line is released (HI-Z) at the end of the last data bit of the last active slot if the next one is inactive.

Bit 3 **FFLUSH:** FIFO flush.

This bit is set by software. It is always read as 0. This bit should be configured when the SAI is disabled.

0: No FIFO flush.

1: FIFO flush. Programming this bit to 1 triggers the FIFO Flush. All the internal FIFO pointers (read and write) are cleared. In this case data still present in the FIFO are lost (no more transmission or received data lost). Before flushing, SAI DMA stream/interrupt must be disabled

Bits 2:0 **FTH[2:0]:** FIFO threshold.

This bit is set and cleared by software.

000: FIFO empty

001: ¼ FIFO

010: ½ FIFO

011: ¾ FIFO

100: FIFO full

101: Reserved

110: Reserved

111: Reserved

43.5.5 SAI configuration register 2 (SAI_BCR2)

Address offset: 0x028

Reset value: 0x0000 0000

31	30	29	28	27	26	25	24	23	22	21	20	19	18	17	16
Res.	Res.	Res.	Res.	Res.	Res.	Res.	Res.	Res.	Res.	Res.	Res.	Res.	Res.	Res.	Res.

15	14	13	12	11	10	9	8	7	6	5	4	3	2	1	0
COMP[1:0]		CPL	MUTECNT[5:0]						MUTE VAL	MUTE	TRIS	F FLUSH	FTH[2:0]		
rw	rw	rw	rw	rw	rw	rw	rw	rw	rw	rw	rw	w	rw	rw	rw

Bits 31:16 Reserved, must be kept at reset value.

Bits 15:14 **COMP[1:0]**: Companding mode.

These bits are set and cleared by software. The µ-Law and the A-Law log are a part of the CCITT G.711 recommendation, the type of complement that will be used depends on *CPL bit*.
The data expansion or data compression are determined by the state of bit MODE[0].
The data compression is applied if the audio block is configured as a transmitter.
The data expansion is automatically applied when the audio block is configured as a receiver.
Refer to *Section : Companding mode* for more details.
00: No companding algorithm
01: Reserved.
10: µ-Law algorithm
11: A-Law algorithm

Note: Companding mode is applicable only when Free protocol mode is selected.

Bit 13 **CPL**: Complement bit.

This bit is set and cleared by software.
It defines the type of complement to be used for companding mode
0: 1's complement representation.
1: 2's complement representation.

Note: This bit has effect only when the companding mode is µ-Law algorithm or A-Law algorithm.

Bits 12:7 **MUTECNT[5:0]**: Mute counter.

These bits are set and cleared by software. They are used only in reception mode.
The value set in these bits is compared to the number of consecutive mute frames detected in reception. When the number of mute frames is equal to this value, the flag MUTEDET will be set and an interrupt will be generated if bit MUTEDETIE is set.
Refer to *Section : Mute mode* for more details.

Bit 6 **MUTEVAL**: Mute value.

This bit is set and cleared by software.It must be written before enabling the audio block: SAIEN. This bit is meaningful only when the audio block operates as a transmitter, the number of slots is lower or equal to 2 and the MUTE bit is set.

If more slots are declared, the bit value sent during the transmission in mute mode is equal to 0, whatever the value of MUTEVAL.

if the number of slot is lower or equal to 2 and MUTEVAL = 1, the MUTE value transmitted for each slot is the one sent during the previous frame.

Refer to *Section : Mute mode* for more details.

0: Bit value 0 is sent during the mute mode.

1: Last values are sent during the mute mode.

Note: This bit is meaningless and should not be used for SPDIF audio blocks.

Bit 5 **MUTE:** Mute.

This bit is set and cleared by software. It is meaningful only when the audio block operates as a transmitter. The MUTE value is linked to value of MUTEVAL if the number of slots is lower or equal to 2, or equal to 0 if it is greater than 2.

Refer to *Section : Mute mode* for more details.

0: No mute mode.

1: Mute mode enabled.

Note: This bit is meaningless and should not be used for SPDIF audio blocks.

Bit 4 **TRIS**: Tristate management on data line.

This bit is set and cleared by software. It is meaningful only if the audio block is configured as a transmitter. This bit is not used when the audio block is configured in SPDIF mode. It should be configured when SAI is disabled.

Refer to *Section : Output data line management on an inactive slot* for more details.

0: SD output line is still driven by the SAI when a slot is inactive.

1: SD output line is released (HI-Z) at the end of the last data bit of the last active slot if the next one is inactive.

Bit 3 **FFLUSH:** FIFO flush.

This bit is set by software. It is always read as 0. This bit should be configured when the SAI is disabled.

0: No FIFO flush.

1: FIFO flush. Programming this bit to 1 triggers the FIFO Flush. All the internal FIFO pointers (read and write) are cleared. In this case data still present in the FIFO are lost (no more transmission or received data lost). Before flushing, SAI DMA stream/interrupt must be disabled

Bits 2:0 **FTH[2:0]:** FIFO threshold.

This bit is set and cleared by software.

000: FIFO empty

001: ¼ FIFO

010: ½ FIFO

011: ¾ FIFO

100: FIFO full

101: Reserved

110: Reserved

111: Reserved

43.5.6 SAI frame configuration register (SAI_AFRCR)

Address offset: 0x00C

Reset value: 0x0000 0007

Note: This register has no meaning in AC'97 and SPDIF audio protocol.

31	30	29	28	27	26	25	24	23	22	21	20	19	18	17	16
Res.	Res.	Res.	Res.	Res.	Res.	Res.	Res.	Res.	Res.	Res.	Res.	Res.	FSOFF	FSPOL	FSDEF
													rw	rw	r

15	14	13	12	11	10	9	8	7	6	5	4	3	2	1	0
Res.	FSALL[6:0]							FRL[7:0]							
	rw	rw	rw	rw	rw	rw	rw	rw	rw	rw	rw	rw	rw	rw	rw

Bits 31:19 Reserved, must be kept at reset value.

Bit 18 **FSOFF**: Frame synchronization offset.

This bit is set and cleared by software. It is meaningless and is not used in AC'97 or SPDIF audio block configuration. This bit must be configured when the audio block is disabled.

0: FS is asserted on the first bit of the slot 0.

1: FS is asserted one bit before the first bit of the slot 0.

Bit 17 **FSPOL**: Frame synchronization polarity.

This bit is set and cleared by software. It is used to configure the level of the start of frame on the FS signal. It is meaningless and is not used in AC'97 or SPDIF audio block configuration.

This bit must be configured when the audio block is disabled.

0: FS is active low (falling edge)

1: FS is active high (rising edge)

Bit 16 **FSDEF**: Frame synchronization definition.

This bit is set and cleared by software.

0: FS signal is a start frame signal

1: FS signal is a start of frame signal + channel side identification

When the bit is set, the number of slots defined in the SAI_xSLOTR register has to be even. It means that half of this number of slots will be dedicated to the left channel and the other slots for the right channel (e.g: this bit has to be set for I2S or MSB/LSB-justified protocols...).

This bit is meaningless and is not used in AC'97 or SPDIF audio block configuration. It must be configured when the audio block is disabled.

Bit 15 Reserved, must be kept at reset value.

Bits 14:8 **FSALL[6:0]**: Frame synchronization active level length.

These bits are set and cleared by software. They specify the length in number of bit clock (SCK) + 1 (FSALL[6:0] + 1) of the active level of the FS signal in the audio frame

These bits are meaningless and are not used in AC'97 or SPDIF audio block configuration.

They must be configured when the audio block is disabled.

Bits 7:0 **FRL[7:0]**: Frame length.

These bits are set and cleared by software. They define the audio frame length expressed in number of SCK clock cycles: the number of bits in the frame is equal to FRL[7:0] + 1.

The minimum number of bits to transfer in an audio frame must be equal to 8, otherwise the audio block will behaves in an unexpected way. This is the case when the data size is 8 bits and only one slot 0 is defined in NBSLOT[4:0] of SAI_xSLOTR register (NBSLOT[3:0] = 0000).

In master mode, if the master clock (available on MCLK_x pin) is used, the frame length should be aligned with a number equal to a power of 2, ranging from 8 to 256. When the master clock is not used (NODIV = 1), it is recommended to program the frame length to an value ranging from 8 to 256.

These bits are meaningless and are not used in AC'97 or SPDIF audio block configuration. They must be configured when the audio block is disabled.

43.5.7 SAI frame configuration register (SAI_BFRCR)

Address offset: 0x02C

Reset value: 0x0000 0007

Note: This register has no meaning in AC'97 and SPDIF audio protocol

31	30	29	28	27	26	25	24	23	22	21	20	19	18	17	16
Res.	Res.	Res.	Res.	Res.	Res.	Res.	Res.	Res.	Res.	Res.	Res.	Res.	FSOFF	FSPOL	FSDEF
													rw	rw	r

15	14	13	12	11	10	9	8	7	6	5	4	3	2	1	0
Res.	FSALL[6:0]							FRL[7:0]							
	rw	rw	rw	rw	rw	rw	rw	rw	rw	rw	rw	rw	rw	rw	rw

Bits 31:19 Reserved, must be kept at reset value.

Bit 18 **FSOFF**: Frame synchronization offset.

This bit is set and cleared by software. It is meaningless and is not used in AC'97 or SPDIF audio block configuration. This bit must be configured when the audio block is disabled.

0: FS is asserted on the first bit of the slot 0.

1: FS is asserted one bit before the first bit of the slot 0.

Bit 17 **FSPOL**: Frame synchronization polarity.

This bit is set and cleared by software. It is used to configure the level of the start of frame on the FS signal. It is meaningless and is not used in AC'97 or SPDIF audio block configuration.

This bit must be configured when the audio block is disabled.

0: FS is active low (falling edge)

1: FS is active high (rising edge)

Bit 16 **FSDEF**: Frame synchronization definition.

This bit is set and cleared by software.

0: FS signal is a start frame signal

1: FS signal is a start of frame signal + channel side identification

When the bit is set, the number of slots defined in the SAI_xSLOTR register has to be even. It means that half of this number of slots will be dedicated to the left channel and the other slots for the right channel (e.g: this bit has to be set for I2S or MSB/LSB-justified protocols...).

This bit is meaningless and is not used in AC'97 or SPDIF audio block configuration. It must be configured when the audio block is disabled.

Bit 15 Reserved, must be kept at reset value.

Bits 14:8 **FSALL[6:0]**: Frame synchronization active level length.

These bits are set and cleared by software. They specify the length in number of bit clock (SCK) + 1 (FSALL[6:0] + 1) of the active level of the FS signal in the audio frame

These bits are meaningless and are not used in AC'97 or SPDIF audio block configuration.

They must be configured when the audio block is disabled.

Bits 7:0 **FRL[7:0]**: Frame length.

These bits are set and cleared by software. They define the audio frame length expressed in number of SCK clock cycles: the number of bits in the frame is equal to FRL[7:0] + 1.

The minimum number of bits to transfer in an audio frame must be equal to 8, otherwise the audio block will behaves in an unexpected way. This is the case when the data size is 8 bits and only one slot 0 is defined in NBSLOT[4:0] of SAI_xSLOTR register (NBSLOT[3:0] = 0000).

In master mode, if the master clock (available on MCLK_x pin) is used, the frame length should be aligned with a number equal to a power of 2, ranging from 8 to 256. When the master clock is not used (NODIV = 1), it is recommended to program the frame length to an value ranging from 8 to 256.

These bits are meaningless and are not used in AC'97 or SPDIF audio block configuration.

43.5.8 SAI slot register (SAI_ASLOTR)

Address offset: 0x010

Reset value: 0x0000 0000

Note: This register has no meaning in AC'97 and SPDIF audio protocol.

31	30	29	28	27	26	25	24	23	22	21	20	19	18	17	16
SLOTEN[15:0]															
rw	rw	rw	rw	rw	rw	rw	rw	rw	rw	rw	rw	rw	rw	rw	rw

15	14	13	12	11	10	9	8	7	6	5	4	3	2	1	0
Res.	Res.	Res.	Res.	NBSLOT[3:0]				SLOTSZ[1:0]		Res.	FBOFF[4:0]				
				rw	rw	rw	rw	rw	rw		rw	rw	rw	rw	rw

Bits 31:16 **SLOTEN[15:0]**: Slot enable.
These bits are set and cleared by software.
Each SLOTEN bit corresponds to a slot position from 0 to 15 (maximum 16 slots).
0: Inactive slot.
1: Active slot.
The slot must be enabled when the audio block is disabled.
They are ignored in AC'97 or SPDIF mode.

Bits 15:12 Reserved, must be kept at reset value.

Bits 11:8 **NBSLOT[3:0]**: Number of slots in an audio frame.
These bits are set and cleared by software.
The value set in this bitfield represents the number of slots + 1 in the audio frame (including the number of inactive slots). The maximum number of slots is 16.
The number of slots should be even if FSDEF bit in the SAI_xFRCR register is set.
The number of slots must be configured when the audio block is disabled.
They are ignored in AC'97 or SPDIF mode.

Bits 7:6 **SLOTSZ[1:0]**: Slot size
This bits is set and cleared by software.
The slot size must be higher or equal to the data size. If this condition is not respected, the behavior of the SAI will be undetermined.
Refer to *Output data line management on an inactive slot* for information on how to drive SD line.
These bits must be set when the audio block is disabled.
They are ignored in AC'97 or SPDIF mode.
00: The slot size is equivalent to the data size (specified in DS[3:0] in the SAI_xCR1 register).
01: 16-bit
10: 32-bit
11: Reserved

Bit 5 Reserved, must be kept at reset value.

Bits 4:0 **FBOFF[4:0]**: First bit offset
These bits are set and cleared by software.
The value set in this bitfield defines the position of the first data transfer bit in the slot. It represents an offset value. In transmission mode, the bits outside the data field are forced to 0. In reception mode, the extra received bits are discarded.
These bits must be set when the audio block is disabled.
They are ignored in AC'97 or SPDIF mode.

43.5.9 SAI slot register (SAI_BSLOTR)

Address offset: 0x030

Reset value: 0x0000 0000

Note: This register has no meaning in AC'97 and SPDIF audio protocol.

31	30	29	28	27	26	25	24	23	22	21	20	19	18	17	16
SLOTEN[15:0]															
rw	rw	rw	rw	rw	rw	rw	rw	rw	rw	rw	rw	rw	rw	rw	rw

15	14	13	12	11	10	9	8	7	6	5	4	3	2	1	0
Res.	Res.	Res.	Res.	NBSLOT[3:0]				SLOTSZ[1:0]		Res.	FBOFF[4:0]				
				rw	rw	rw	rw	rw	rw		rw	rw	rw	rw	rw

Bits 31:16 **SLOTEN[15:0]**: Slot enable.
These bits are set and cleared by software.
Each SLOTEN bit corresponds to a slot position from 0 to 15 (maximum 16 slots).
0: Inactive slot.
1: Active slot.
The slot must be enabled when the audio block is disabled.
They are ignored in AC'97 or SPDIF mode.

Bits 15:12 Reserved, must be kept at reset value.

Bits 11:8 **NBSLOT[3:0]**: Number of slots in an audio frame.
These bits are set and cleared by software.
The value set in this bitfield represents the number of slots + 1 in the audio frame (including the number of inactive slots). The maximum number of slots is 16.
The number of slots should be even if FSDEF bit in the SAI_xFRCR register is set.
The number of slots must be configured when the audio block is disabled.
They are ignored in AC'97 or SPDIF mode.

Bits 7:6 **SLOTSZ[1:0]**: Slot size
This bits is set and cleared by software.
The slot size must be higher or equal to the data size. If this condition is not respected, the behavior of the SAI will be undetermined.
Refer to *Output data line management on an inactive slot* for information on how to drive SD line.
These bits must be set when the audio block is disabled.
They are ignored in AC'97 or SPDIF mode.
00: The slot size is equivalent to the data size (specified in DS[3:0] in the SAI_xCR1 register).
01: 16-bit
10: 32-bit
11: Reserved

Bit 5 Reserved, must be kept at reset value.

Bits 4:0 **FBOFF[4:0]**: First bit offset
These bits are set and cleared by software.
The value set in this bitfield defines the position of the first data transfer bit in the slot. It represents an offset value. In transmission mode, the bits outside the data field are forced to 0. In reception mode, the extra received bits are discarded.
These bits must be set when the audio block is disabled.
They are ignored in AC'97 or SPDIF mode.

43.5.10 SAI interrupt mask register (SAI_AIM)

Address offset: 0x014

Reset value: 0x0000 0000

31	30	29	28	27	26	25	24	23	22	21	20	19	18	17	16
Res.	Res.	Res.	Res.	Res.	Res.	Res.	Res.	Res.	Res.	Res.	Res.	Res.	Res.	Res.	Res.
15	**14**	**13**	**12**	**11**	**10**	**9**	**8**	**7**	**6**	**5**	**4**	**3**	**2**	**1**	**0**
Res.	Res.	Res.	Res.	Res.	Res.	Res.	Res.	Res.	LFSDETIE	AFSDETIE	CNRDYIE	FREQIE	WCKCFGIE	MUTEDETIE	OVRUDRIE
									rw	rw	rw	rw	rw	rw	rw

Bits 31:7 Reserved, must be kept at reset value.

Bit 6 **LFSDETIE**: Late frame synchronization detection interrupt enable.
This bit is set and cleared by software.
0: Interrupt is disabled
1: Interrupt is enabled
When this bit is set, an interrupt will be generated if the LFSDET bit is set in the SAI_xSR register.
This bit is meaningless in AC'97, SPDIF mode or when the audio block operates as a master.

Bit 5 **AFSDETIE**: Anticipated frame synchronization detection interrupt enable.
This bit is set and cleared by software.
0: Interrupt is disabled
1: Interrupt is enabled
When this bit is set, an interrupt will be generated if the AFSDET bit in the SAI_xSR register is set.
This bit is meaningless in AC'97, SPDIF mode or when the audio block operates as a master.

Bit 4 **CNRDYIE**: Codec not ready interrupt enable (AC'97).
This bit is set and cleared by software.
0: Interrupt is disabled
1: Interrupt is enabled
When the interrupt is enabled, the audio block detects in the slot 0 (tag0) of the AC'97 frame if the Codec connected to this line is ready or not. If it is not ready, the CNRDY flag in the SAI_xSR register is set and an interrupt is generated.
This bit has a meaning only if the AC'97 mode is selected through PRTCFG[1:0] bits and the audio block is operates as a receiver.

Bit 3 **FREQIE**: FIFO request interrupt enable.
This bit is set and cleared by software.
0: Interrupt is disabled
1: Interrupt is enabled
When this bit is set, an interrupt is generated if the FREQ bit in the SAI_xSR register is set.
Since the audio block defaults to operate as a transmitter after reset, the MODE bit must be configured before setting FREQIE to avoid a parasitic interrupt in receiver mode,

Bit 2 **WCKCFGIE**: Wrong clock configuration interrupt enable.
This bit is set and cleared by software.
0: Interrupt is disabled
1: Interrupt is enabled
This bit is taken into account only if the audio block is configured as a master (MODE[1] = 0) and NODIV = 0.
It generates an interrupt if the WCKCFG flag in the SAI_xSR register is set.
Note: This bit is used only in Free protocol mode *and is meaningless in other modes.*

Bit 1 **MUTEDETIE**: Mute detection interrupt enable.
This bit is set and cleared by software.
0: Interrupt is disabled
1: Interrupt is enabled
When this bit is set, an interrupt is generated if the MUTEDET bit in the SAI_xSR register is set.
This bit has a meaning only if the audio block is configured in receiver mode.

Bit 0 **OVRUDRIE**: Overrun/underrun interrupt enable.
This bit is set and cleared by software.
0: Interrupt is disabled
1: Interrupt is enabled
When this bit is set, an interrupt is generated if the OVRUDR bit in the SAI_xSR register is set.

43.5.11 SAI interrupt mask register (SAI_BIM)

Address offset: 0x034

Reset value: 0x0000 0000

31	30	29	28	27	26	25	24	23	22	21	20	19	18	17	16
Res.	Res.	Res.	Res.	Res.	Res.	Res.	Res.	Res.	Res.	Res.	Res.	Res.	Res.	Res.	Res.

15	14	13	12	11	10	9	8	7	6	5	4	3	2	1	0
Res.	Res.	Res.	Res.	Res.	Res.	Res.	Res.	Res.	LFSDETIE	AFSDETIE	CNRDYIE	FREQIE	WCKCFGIE	MUTEDETIE	OVRUDRIE
									rw	rw	rw	rw	rw	rw	rw

Bits 31:7 Reserved, must be kept at reset value.

Bit 6 **LFSDETIE**: Late frame synchronization detection interrupt enable.
This bit is set and cleared by software.
0: Interrupt is disabled
1: Interrupt is enabled
When this bit is set, an interrupt will be generated if the LFSDET bit is set in the SAI_xSR register.
This bit is meaningless in AC'97, SPDIF mode or when the audio block operates as a master.

Bit 5 **AFSDETIE**: Anticipated frame synchronization detection interrupt enable.
This bit is set and cleared by software.
0: Interrupt is disabled
1: Interrupt is enabled
When this bit is set, an interrupt will be generated if the AFSDET bit in the SAI_xSR register is set.
This bit is meaningless in AC'97, SPDIF mode or when the audio block operates as a master.

Bit 4 **CNRDYIE**: Codec not ready interrupt enable (AC'97).
This bit is set and cleared by software.
0: Interrupt is disabled
1: Interrupt is enabled
When the interrupt is enabled, the audio block detects in the slot 0 (tag0) of the AC'97 frame if the Codec connected to this line is ready or not. If it is not ready, the CNRDY flag in the SAI_xSR register is set and an interrupt is generated.
This bit has a meaning only if the AC'97 mode is selected through PRTCFG[1:0] bits and the audio block is operates as a receiver.

Bit 3 **FREQIE**: FIFO request interrupt enable.
This bit is set and cleared by software.
0: Interrupt is disabled
1: Interrupt is enabled
When this bit is set, an interrupt is generated if the FREQ bit in the SAI_xSR register is set.
Since the audio block defaults to operate as a transmitter after reset, the MODE bit must be configured before setting FREQIE to avoid a parasitic interrupt in receiver mode,

Bit 2 **WCKCFGIE**: Wrong clock configuration interrupt enable.
This bit is set and cleared by software.
0: Interrupt is disabled
1: Interrupt is enabled
This bit is taken into account only if the audio block is configured as a master (MODE[1] = 0) and NODIV = 0.
It generates an interrupt if the WCKCFG flag in the SAI_xSR register is set.
Note: This bit is used only in Free protocol mode and is meaningless in other modes.

Bit 1 **MUTEDETIE**: Mute detection interrupt enable.
This bit is set and cleared by software.
0: Interrupt is disabled
1: Interrupt is enabled
When this bit is set, an interrupt is generated if the MUTEDET bit in the SAI_xSR register is set.
This bit has a meaning only if the audio block is configured in receiver mode.

Bit 0 **OVRUDRIE**: Overrun/underrun interrupt enable.
This bit is set and cleared by software.
0: Interrupt is disabled
1: Interrupt is enabled
When this bit is set, an interrupt is generated if the OVRUDR bit in the SAI_xSR register is set.

43.5.12 SAI status register (SAI_ASR)

Address offset: 0x018

Reset value: 0x0000 0008

31	30	29	28	27	26	25	24	23	22	21	20	19	18	17	16
Res.	Res.	Res.	Res.	Res.	Res.	Res.	Res.	Res.	Res.	Res.	Res.	Res.	FLVL[2:0]		
													r	r	r
15	14	13	12	11	10	9	8	7	6	5	4	3	2	1	0
Res.	Res.	Res.	Res.	Res.	Res.	Res.	Res.	Res.	LFSDET	AFSDET	CNRDY	FREQ	WCKCFG	MUTEDET	OVRUDR
									r	r	r	r	r	r	r

Bits 31:19 Reserved, must be kept at reset value.

Bits 18:16 **FLVL[2:0]**: FIFO level threshold.
This bit is read only. The FIFO level threshold flag is managed only by hardware and its setting depends on SAI block configuration (transmitter or receiver mode).
000: FIFO empty (transmitter and receiver modes)
001: FIFO ≤ ¼ but not empty (transmitter mode), FIFO < ¼ but not empty (receiver mode)
010: ¼ < FIFO ≤ ½ (transmitter mode), ¼ ≤ FIFO < ½ (receiver mode)
011: ½ < FIFO ≤ ¾ (transmitter mode), ½ ≤ FIFO < ¾ (receiver mode)
100: ¾ < FIFO but not full (transmitter mode), ¾ ≤ FIFO but not full (receiver mode)
101: FIFO full (transmitter and receiver modes)
Others: Reserved

Bits 15:7 Reserved, must be kept at reset value.

Bit 6 **LFSDET**: Late frame synchronization detection.

This bit is read only.
0: No error.
1: Frame synchronization signal is not present at the right time.
This flag can be set only if the audio block is configured in slave mode.
It is not used in AC'97 or SPDIF mode.
It can generate an interrupt if LFSDETIE bit is set in the SAI_xIM register.
This flag is cleared when the software sets bit CLFSDET in SAI_xCLRFR register

Bit 5 **AFSDET**: Anticipated frame synchronization detection.

This bit is read only.
0: No error.
1: Frame synchronization signal is detected earlier than expected.
This flag can be set only if the audio block is configured in slave mode.
It is not used in AC'97 or SPDIF mode.
It can generate an interrupt if AFSDETIE bit is set in SAI_xIM register.
This flag is cleared when the software sets CAFSDET bit in SAI_xCLRFR register.

Bit 4 **CNRDY**: Codec not ready.

This bit is read only.
0: External AC'97 Codec is ready
1: External AC'97 Codec is not ready
This bit is used only when the AC'97 audio protocol is selected in the SAI_xCR1 register and configured in receiver mode.
It can generate an interrupt if CNRDYIE bit is set in SAI_xIM register.
This flag is cleared when the software sets CCNRDY bit in SAI_xCLRFR register.

Bit 3 **FREQ**: FIFO request.

This bit is read only.
0: No FIFO request.
1: FIFO request to read or to write the SAI_xDR.
The request depends on the audio block configuration:

– If the block is configured in transmission mode, the FIFO request is related to a write request operation in the SAI_xDR.
– If the block configured in reception, the FIFO request related to a read request operation from the SAI_xDR.

This flag can generate an interrupt if FREQIE bit is set in SAI_xIM register.

Bit 2 **WCKCFG**: Wrong clock configuration flag.

This bit is read only.

0: Clock configuration is correct

1: Clock configuration does not respect the rule concerning the frame length specification defined in *Section 43.3.6: Frame synchronization* (configuration of FRL[7:0] bit in the SAI_xFRCR register)

This bit is used only when the audio block operates in master mode (MODE[1] = 0) and NODIV = 0.

It can generate an interrupt if WCKCFGIE bit is set in SAI_xIM register.

This flag is cleared when the software sets CWCKCFG bit in SAI_xCLRFR register.

Bit 1 **MUTEDET**: Mute detection.

This bit is read only.

0: No MUTE detection on the SD input line

1: MUTE value detected on the SD input line (0 value) for a specified number of consecutive audio frame

This flag is set if consecutive 0 values are received in each slot of a given audio frame and for a consecutive number of audio frames (set in the MUTECNT bit in the SAI_xCR2 register).

It can generate an interrupt if MUTEDETIE bit is set in SAI_xIM register.

This flag is cleared when the software sets bit CMUTEDET in the SAI_xCLRFR register.

Bit 0 **OVRUDR**: Overrun / underrun.

This bit is read only.

0: No overrun/underrun error.

1: Overrun/underrun error detection.

The overrun and underrun conditions can occur only when the audio block is configured as a receiver and a transmitter, respectively.

It can generate an interrupt if OVRUDRIE bit is set in SAI_xIM register.

This flag is cleared when the software sets COVRUDR bit in SAI_xCLRFR register.

43.5.13 SAI status register (SAI_BSR)

Address offset: 0x038

Reset value: 0x0000 0008

31	30	29	28	27	26	25	24	23	22	21	20	19	18	17	16
Res.	Res.	Res.	Res.	Res.	Res.	Res.	Res.	Res.	Res.	Res.	Res.	Res.	FLVL[2:0]		
													r	r	r
15	14	13	12	11	10	9	8	7	6	5	4	3	2	1	0
Res.	Res.	Res.	Res.	Res.	Res.	Res.	Res.	Res.	LFSDET	AFSDET	CNRDY	FREQ	WCKCFG	MUTEDET	OVRUDR
									r	r	r	r	r	r	r

Bits 31:19 Reserved, must be kept at reset value.

Bits 18:16 **FLVL[2:0]**: FIFO level threshold.

This bit is read only. The FIFO level threshold flag is managed only by hardware and its setting depends on SAI block configuration (transmitter or receiver mode).
000: FIFO empty (transmitter and receiver modes)
001: FIFO ≤ ¼ but not empty (transmitter mode), FIFO < ¼ but not empty (receiver mode)
010: ¼ < FIFO ≤ ½ (transmitter mode), ¼ ≤ FIFO < ½ (receiver mode)
011: ½ < FIFO ≤ ¾ (transmitter mode), ½ ≤ FIFO < ¾ (receiver mode)
100: ¾ < FIFO but not full (transmitter mode), ¾ ≤ FIFO but not full (receiver mode)
101: FIFO full (transmitter and receiver modes)
Others: Reserved

Bits 15:7 Reserved, must be kept at reset value.

Bit 6 **LFSDET**: Late frame synchronization detection.

This bit is read only.
0: No error.
1: Frame synchronization signal is not present at the right time.
This flag can be set only if the audio block is configured in slave mode.
It is not used in AC'97 or SPDIF mode.
It can generate an interrupt if LFSDETIE bit is set in the SAI_xIM register.
This flag is cleared when the software sets bit CLFSDET in SAI_xCLRFR register

Bit 5 **AFSDET**: Anticipated frame synchronization detection.

This bit is read only.
0: No error.
1: Frame synchronization signal is detected earlier than expected.
This flag can be set only if the audio block is configured in slave mode.
It is not used in AC'97 or SPDIF mode.
It can generate an interrupt if AFSDETIE bit is set in SAI_xIM register.
This flag is cleared when the software sets CAFSDET bit in SAI_xCLRFR register.

Bit 4 **CNRDY**: Codec not ready.

This bit is read only.
0: External AC'97 Codec is ready
1: External AC'97 Codec is not ready
This bit is used only when the AC'97 audio protocol is selected in the SAI_xCR1 register and configured in receiver mode.
It can generate an interrupt if CNRDYIE bit is set in SAI_xIM register.
This flag is cleared when the software sets CCNRDY bit in SAI_xCLRFR register.

Bit 3 **FREQ**: FIFO request.

This bit is read only.
0: No FIFO request.
1: FIFO request to read or to write the SAI_xDR.
The request depends on the audio block configuration:

– If the block is configured in transmission mode, the FIFO request is related to a write request operation in the SAI_xDR.
– If the block configured in reception, the FIFO request related to a read request operation from the SAI_xDR.

This flag can generate an interrupt if FREQIE bit is set in SAI_xIM register.

Bit 2 **WCKCFG**: Wrong clock configuration flag.

This bit is read only.

0: Clock configuration is correct

1: Clock configuration does not respect the rule concerning the frame length specification defined in *Section 43.3.6: Frame synchronization* (configuration of FRL[7:0] bit in the SAI_xFRCR register)

This bit is used only when the audio block operates in master mode (MODE[1] = 0) and NODIV = 0.

It can generate an interrupt if WCKCFGIE bit is set in SAI_xIM register.

This flag is cleared when the software sets CWCKCFG bit in SAI_xCLRFR register.

Bit 1 **MUTEDET**: Mute detection.

This bit is read only.

0: No MUTE detection on the SD input line

1: MUTE value detected on the SD input line (0 value) for a specified number of consecutive audio frame

This flag is set if consecutive 0 values are received in each slot of a given audio frame and for a consecutive number of audio frames (set in the MUTECNT bit in the SAI_xCR2 register).

It can generate an interrupt if MUTEDETIE bit is set in SAI_xIM register.

This flag is cleared when the software sets bit CMUTEDET in the SAI_xCLRFR register.

Bit 0 **OVRUDR**: Overrun / underrun.

This bit is read only.

0: No overrun/underrun error.

1: Overrun/underrun error detection.

The overrun and underrun conditions can occur only when the audio block is configured as a receiver and a transmitter, respectively.

It can generate an interrupt if OVRUDRIE bit is set in SAI_xIM register.

This flag is cleared when the software sets COVRUDR bit in SAI_xCLRFR register.

43.5.14 SAI clear flag register (SAI_ACLRFR)

Address offset: 0x01C

Reset value: 0x0000 0000

31	30	29	28	27	26	25	24	23	22	21	20	19	18	17	16
Res.	Res.	Res.	Res.	Res.	Res.	Res.	Res.	Res.	Res.	Res.	Res.	Res.	Res.	Res.	Res.

15	14	13	12	11	10	9	8	7	6	5	4	3	2	1	0
Res.	Res.	Res.	Res.	Res.	Res.	Res.	Res.	Res.	CLFSDET	CAFSDET	CCNRDY	Res.	CWCKCFG	CMUTEDET	COVRUDR
									w	w	w		w	w	w

Bits 31:7 Reserved, must be kept at reset value.

Bit 6 **CLFSDET**: Clear late frame synchronization detection flag.
This bit is write only.
Programming this bit to 1 clears the LFSDET flag in the SAI_xSR register.
This bit is not used in AC'97 or SPDIF mode
Reading this bit always returns the value 0.

Bit 5 **CAFSDET**: Clear anticipated frame synchronization detection flag.
This bit is write only.
Programming this bit to 1 clears the AFSDET flag in the SAI_xSR register.
It is not used in AC'97 or SPDIF mode.
Reading this bit always returns the value 0.

Bit 4 **CCNRDY**: Clear Codec not ready flag.
This bit is write only.
Programming this bit to 1 clears the CNRDY flag in the SAI_xSR register.
This bit is used only when the AC'97 audio protocol is selected in the SAI_xCR1 register.
Reading this bit always returns the value 0.

Bit 3 Reserved, must be kept at reset value.

Bit 2 **CWCKCFG**: Clear wrong clock configuration flag.
This bit is write only.
Programming this bit to 1 clears the WCKCFG flag in the SAI_xSR register.
This bit is used only when the audio block is set as master (MODE[1] = 0) and NODIV = 0 in the SAI_xCR1 register.
Reading this bit always returns the value 0.

Bit 1 **CMUTEDET**: Mute detection flag.
This bit is write only.
Programming this bit to 1 clears the MUTEDET flag in the SAI_xSR register.
Reading this bit always returns the value 0.

Bit 0 **COVRUDR**: Clear overrun / underrun.
This bit is write only.
Programming this bit to 1 clears the OVRUDR flag in the SAI_xSR register.
Reading this bit always returns the value 0.

43.5.15 SAI clear flag register (SAI_BCLRFR)

Address offset: 0x03C

Reset value: 0x0000 0000

31	30	29	28	27	26	25	24	23	22	21	20	19	18	17	16
Res.	Res.	Res.	Res.	Res.	Res.	Res.	Res.	Res.	Res.	Res.	Res.	Res.	Res.	Res.	Res.

15	14	13	12	11	10	9	8	7	6	5	4	3	2	1	0
Res.	Res.	Res.	Res.	Res.	Res.	Res.	Res.	Res.	CLFSDET	CAFSDET	CCNRDY	Res.	CWCKCFG	CMUTEDET	COVRUDR
									w	w	w		w	w	w

Bits 31:7 Reserved, must be kept at reset value.

Bit 6 **CLFSDET**: Clear late frame synchronization detection flag.
This bit is write only.
Programming this bit to 1 clears the LFSDET flag in the SAI_xSR register.
This bit is not used in AC'97 or SPDIF mode
Reading this bit always returns the value 0.

Bit 5 **CAFSDET**: Clear anticipated frame synchronization detection flag.
This bit is write only.
Programming this bit to 1 clears the AFSDET flag in the SAI_xSR register.
It is not used in AC'97 or SPDIF mode.
Reading this bit always returns the value 0.

Bit 4 **CCNRDY**: Clear Codec not ready flag.
This bit is write only.
Programming this bit to 1 clears the CNRDY flag in the SAI_xSR register.
This bit is used only when the AC'97 audio protocol is selected in the SAI_xCR1 register.
Reading this bit always returns the value 0.

Bit 3 Reserved, must be kept at reset value.

Bit 2 **CWCKCFG**: Clear wrong clock configuration flag.
This bit is write only.
Programming this bit to 1 clears the WCKCFG flag in the SAI_xSR register.
This bit is used only when the audio block is set as master (MODE[1] = 0) and NODIV = 0 in the SAI_xCR1 register.
Reading this bit always returns the value 0.

Bit 1 **CMUTEDET**: Mute detection flag.
This bit is write only.
Programming this bit to 1 clears the MUTEDET flag in the SAI_xSR register.
Reading this bit always returns the value 0.

Bit 0 **COVRUDR**: Clear overrun / underrun.
This bit is write only.
Programming this bit to 1 clears the OVRUDR flag in the SAI_xSR register.
Reading this bit always returns the value 0.

43.5.16 SAI data register (SAI_ADR)

Address offset: 0x020

Reset value: 0x0000 0000

31	30	29	28	27	26	25	24	23	22	21	20	19	18	17	16
DATA[31:16]															
rw	rw	rw	rw	rw	rw	rw	rw	rw	rw	rw	rw	rw	rw	rw	rw
15	14	13	12	11	10	9	8	7	6	5	4	3	2	1	0
DATA[15:0]															
rw	rw	rw	rw	rw	rw	rw	rw	rw	rw	rw	rw	rw	rw	rw	rw

Bits 31:0 **DATA[31:0]**: Data

A write to this register loads the FIFO provided the FIFO is not full.
A read from this register empties the FIFO if the FIFO is not empty.

43.5.17 SAI data register (SAI_BDR)

Address offset: 0x040

Reset value: 0x0000 0000

31	30	29	28	27	26	25	24	23	22	21	20	19	18	17	16
DATA[31:16]															
rw	rw	rw	rw	rw	rw	rw	rw	rw	rw	rw	rw	rw	rw	rw	rw
15	14	13	12	11	10	9	8	7	6	5	4	3	2	1	0
DATA[15:0]															
rw	rw	rw	rw	rw	rw	rw	rw	rw	rw	rw	rw	rw	rw	rw	rw

Bits 31:0 **DATA[31:0]**: Data

A write to this register loads the FIFO provided the FIFO is not full.
A read from this register empties the FIFO if the FIFO is not empty.

43.5.18 SAI register map

The following table summarizes the SAI registers.

Table 274. SAI register map and reset values

Offset	Register name	31	30	29	28	27	26	25	24	23	22	21	20	19	18	17	16	15	14	13	12	11	10	9	8	7	6	5	4	3	2	1	0
0x0000	SAI_GCR	Res.	Res.	Res.	Res.	Res.	Res.	Res.	Res.	Res.	Res.	Res.	Res.	Res.	Res.	Res.	Res.	Res.	Res.	Res.	Res.	Res.	Res.	Res.	Res.	Res.	Res.	SYNCOUT[1:0]		Res.	Res.	SYNCIN[1:0]	
	Reset value																											0	0			0	0
0x0004 or 0x0024	SAI_xCR1	Res.	Res.	Res.	Res.	Res.	Res.	Res.	Res.	MCKDIV[3:0]				NODIV	Res.	DMAEN	SAIEN	Res.	Res.	OUTDRIV	MONO	SYNCEN[1:0]		CKSTR	LSBFIRST	DS[2:0]			Res.	PRTCFG[1:0]		MODE[1:0]	
	Reset value									0	0	0	0	0		0	0			0	0	0	0	0	0	0	1	0		0	0	0	0
0x0008 or 0x0028	SAI_xCR2	Res.	Res.	Res.	Res.	Res.	Res.	Res.	Res.	Res.	Res.	Res.	Res.	Res.	Res.	Res.	Res.	COMP[1:0]		CPL	MUTECN[5:0]						MUTE VAL	MUTE	TRIS	FFLUS	FTH[2:0]		
	Reset value																	0	0	0	0	0	0	0	0	0	0	0	0	0	0	0	0
0x000C or 0x002C	SAI_xFRCR	Res.	Res.	Res.	Res.	Res.	Res.	Res.	Res.	Res.	Res.	Res.	Res.	Res.	FSOFF	FSPOL	FSDEF	Res.	FSALL[6:0]							FRL[7:0]							
	Reset value														0	0	0		0	0	0	0	0	0	0	0	0	0	0	0	1	1	1
0x0010 or 0x0030	SAI_xSLOTR	SLOTEN[15:0]																Res.	Res.	Res.	Res.	NBSLOT[3:0]				SLOTSZ[1:0]		Res.	FBOFF[4:0]				
	Reset value	0	0	0	0	0	0	0	0	0	0	0	0	0	0	0	0					0	0	0	0	0	0		0	0	0	0	0
0x0014 or 0x0034	SAI_xIM	Res.	Res.	Res.	Res.	Res.	Res.	Res.	Res.	Res.	Res.	Res.	Res.	Res.	Res.	Res.	Res.	Res.	Res.	Res.	Res.	Res.	Res.	Res.	Res.	Res.	LFSDETIE	AFSDETIE	CNRDYIE	FREQIE	WCKCFGIE	MUTEDETIE	OVRUDRIE
	Reset value																										0	0	0	0	0	0	0
0x0018 or 0x0038	SAI_xSR	Res.	Res.	Res.	Res.	Res.	Res.	Res.	Res.	Res.	Res.	Res.	Res.	Res.	FLVL[2:0]			Res.	Res.	Res.	Res.	Res.	Res.	Res.	Res.	Res.	LFSDET	AFSDET	CNRDY	FREQ	WCKCFG	MUTEDET	OVRUDR
	Reset value														0	0	0										0	0	0	0	1	0	0
0x001C or 0x003C	SAI_xCLRFR	Res.	Res.	Res.	Res.	Res.	Res.	Res.	Res.	Res.	Res.	Res.	Res.	Res.	Res.	Res.	Res.	Res.	Res.	Res.	Res.	Res.	Res.	Res.	Res.	Res.	CLFSDET	CAFSDET	CCNRDY	Res.	CWCKCFG	CMUTEDET	COVRUDR
	Reset value																										0	0	0		0	0	0
0x0020 or 0x0040	SAI_xDR	DATA[31:0]																															
	Reset value	0	0	0	0	0	0	0	0	0	0	0	0	0	0	0	0	0	0	0	0	0	0	0	0	0	0	0	0	0	0	0	0

Refer to *Section 2.2 on page 75* for the register boundary addresses.

44 Single Wire Protocol Master Interface (SWPMI)

44.1 Introduction

The Single Wire Protocol Master Interface (SWPMI) is the master interface corresponding to the Contactless front-end (CLF) defined in the ETSI TS 102 613 technical specification.

The principle of the Single wire protocol (SWP) is based on the transmission of digital information in full duplex mode:

- S1 signal (from Master to Slave) is transmitted by a digital modulation (L or H) in the voltage domain (refer to *Figure 487: S1 signal coding*),
- S2 signal (from Slave to Master) is transmitted by a digital modulation (L or H) in the current domain (refer to *Figure 488: S2 signal coding*).

Figure 487. S1 signal coding

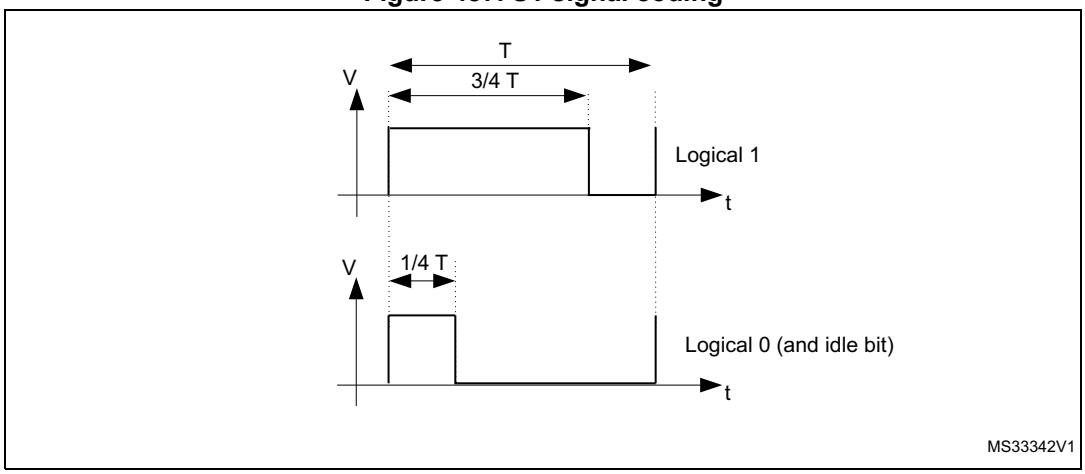

Figure 488. S2 signal coding

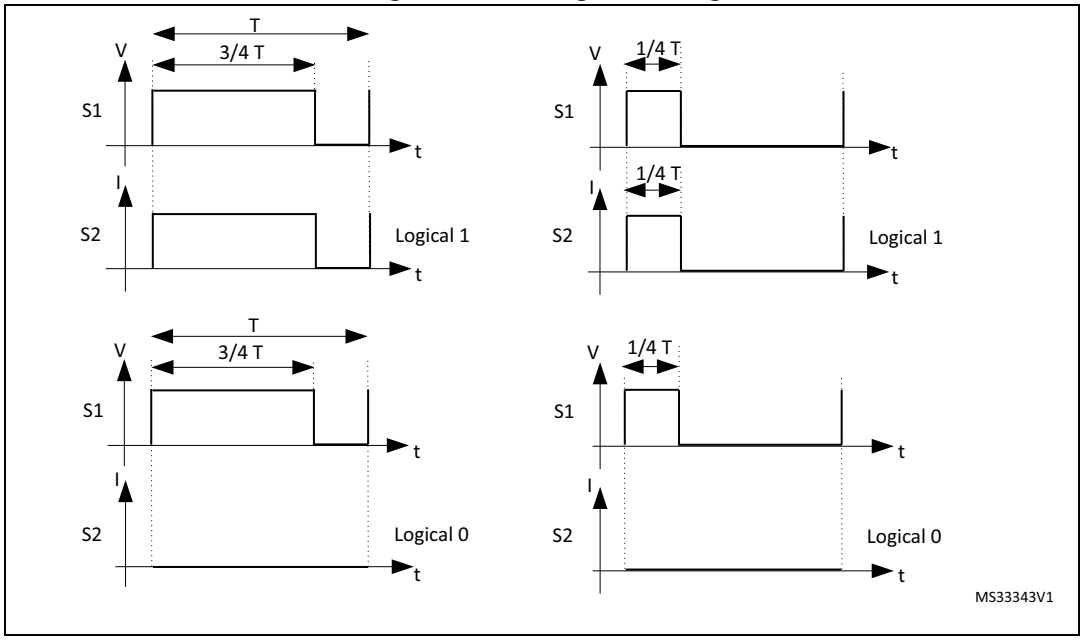

44.2 SWPMI main features

The SWPMI module main features are the following (see *Figure 44.3.3: SWP bus states*):

- Full-duplex communication mode
- Automatic SWP bus state management
- Automatic handling of Start of frame (SOF)
- Automatic handling of End of frame (EOF)
- Automatic handling of stuffing bits
- Automatic CRC-16 calculation and generation in transmission
- Automatic CRC-16 calculation and checking in reception
- 32-bit Transmit data register
- 32-bit Receive data register
- Multi software buffer mode for efficient DMA implementation and multi frame buffering
- Configurable bit-rate up to 2 Mbit/s
- Configurable interrupts
- CRC error, underrun, overrun flags
- Frame reception and transmission complete flags
- Slave resume detection flag
- Loopback mode for test purpose
- Embedded SWPMI_IO transceiver compliant with ETSI TS 102 613 technical specification
- Dedicated mode to output SWPMI_RX, SWPMI_TX and SWPMI_SUSPEND signals on GPIOs, in case of external transceiver connection

44.3 SWPMI functional description

44.3.1 SWPMI block diagram

Figure 489. SWPMI block diagram

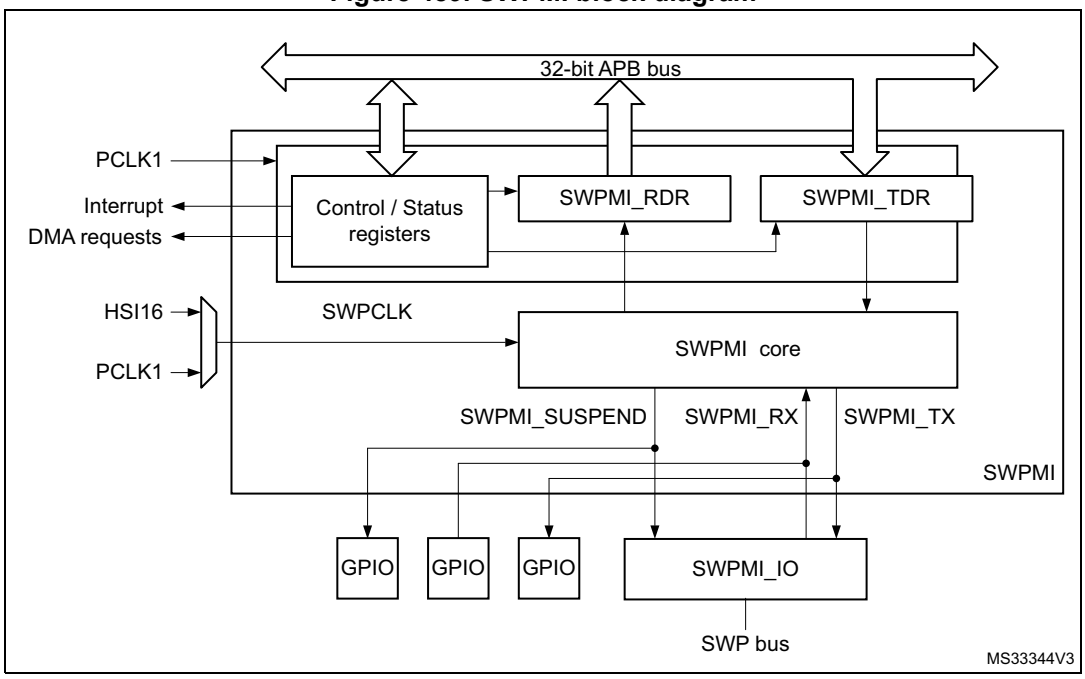

Refer to the bit SWPMI1SEL in *Section 6.4.28: Peripherals independent clock configuration register (RCC_CCIPR)* to select the SWPCLK (SWPMI core clock source).

Note: In order to support the exit from Stop mode by a RESUME by slave, it is mandatory to select HSI16 for SWPCLK. If this feature is not required, PCLK1 can be selected, and SWPMI must be disabled before entering the Stop mode.

44.3.2 SWP initialization and activation

The initialization and activation will set the SWPMI_IO state from low to high.

For Class B, i.e. V_{DD} is in the range [2.70 V to 3.30 V], the procedure is the following:

1. clear the SWP_CLASS bit in SWPMI_OR register,
2. configure SWPMI_IO as alternate function (refer to *Section 8: General-purpose I/Os (GPIO)*) to enable the SWPMI_IO transceiver,
3. wait for $t_{SWPSTART}$ Max (refer to product datasheet),
4. set SWPACT bit in SWPMI_CR register to ACTIVATE the SWP i.e. to move from DEACTIVATED to SUSPENDED.

For Class C, i.e. V_{DD} is in the range [1.62 V to 1.98 V], the procedure is the following:

1. set the SWP_CLASS bit in SWPMI_OR register,
2. configure SWPMI_IO as alternate function (refer to *Section 8: General-purpose I/Os (GPIO)*) to enable the SWPMI_IO transceiver,
3. set SWPACT bit in SWPMI_CR register to ACTIVATE the SWP i.e. to move from DEACTIVATED to SUSPENDED.

44.3.3 SWP bus states

The SWP bus can have the following states: DEACTIVATED, SUSPENDED, ACTIVATED.

Several transitions are possible:

- ACTIVATE: transition from DEACTIVATED to SUSPENDED state,
- SUSPEND: transition from ACTIVATED to SUSPENDED state,
- RESUME by master: transition from SUSPENDED to ACTIVATED state initiated by the master,
- RESUME by slave: transition from SUSPENDED to ACTIVATED state initiated by the slave,
- DEACTIVATE: transition from SUSPENDED to DEACTIVATED state.

ACTIVATE

During and just after reset, the SWPMI_IO is configured in analog mode. Refer to *Section 44.3.2: SWP initialization and activation* to activate the SWP bus.

SUSPEND

The SWP bus stays in the ACTIVATED state as long as there is a communication with the slave, either in transmission or in reception. The SWP bus switches back to the SUSPENDED state as soon as there is no more transmission or reception activity, after 7 idle bits.

RESUME by master

Once the SWPMI is enabled, the user can request a SWPMI frame transmission. The SWPMI first sends a transition sequence and 8 idle bits (RESUME by master) before starting the frame transmission. The SWP moves from the SUSPENDED to ACTIVATED state after the RESUME by master (refer to *Figure 490: SWP bus states*).

RESUME by slave

Once the SWPMI is enabled, the SWP can also move from the SUSPENDED to ACTIVATED state if the SWPMI receives a RESUME from the slave. The RESUME by slave sets the SRF flag in the SWPMI_ISR register.

DEACTIVATE

Deactivate request

If no more communication is required, and if SWP is in the SUSPENDED mode, the user can request to switch the SWP to the DEACTIVATED mode by disabling the SWPMI peripheral. The software must set DEACT bit in the SWPMI_CR register in order to request the DEACTIVATED mode. If no RESUME by slave is detected by SWPMI, the DEACTF flag is set in the SWPMI_ISR register and the SWPACT bit is cleared in the SWPMI_ICR register. In case a RESUME by slave is detected by the SWPMI while the software is setting DEACT bit, the SRF flag is set in the SWPMI_ISR register, DEACTF is kept cleared, SWPACT is kept set and DEACT bit is cleared.

In order to activate SWP again, the software must clear DEACT bit in the SWPMI_CR register before setting SWPACT bit.

Deactivate mode

In order to switch the SWP to the DEACTIVATED mode immediately, ignoring any possible incoming RESUME by slave, the user must clear SWPACT bit in the SWPMI_CR register.

Note: In order to further reduce current consumption once SWPACT bit is cleared, configure the SWPMI_IO port as output push pull low in GPIO controller (refer to Section 8: General-purpose I/Os (GPIO)).

Figure 490. SWP bus states

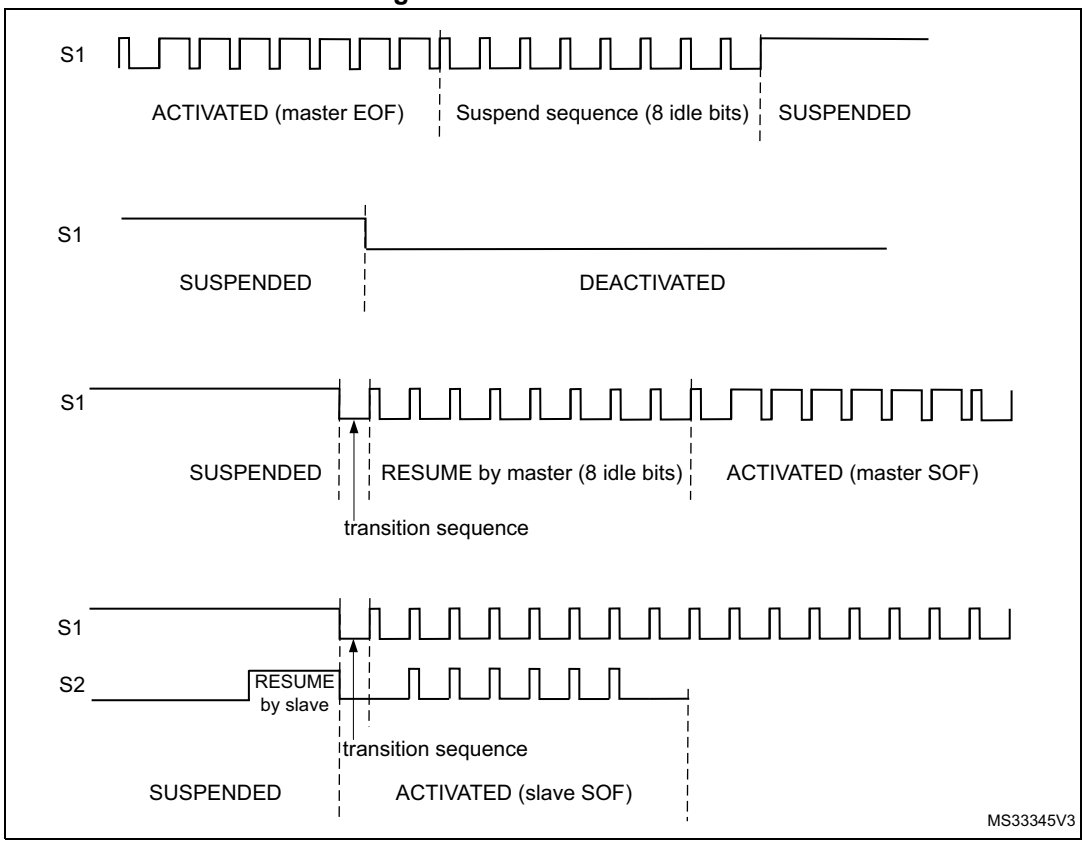

44.3.4 SWPMI_IO (internal transceiver) bypass

A SWPMI_IO (transceiver), compliant with ETSI TS 102 613 technical specification, is embedded in the microcontroller. Nevertheless, this is possible to bypass it by setting SWP_TBYP bit in SWPMI_OR register. In this case, the SWPMI_IO is disabled and the SWPMI_RX, SWPMI_TX and SWPMI_SUSPEND signals are available as alternate functions on three GPIOs (refer to “Pinouts and pin description” in product datasheet). This configuration is selected to connect an external transceiver.

44.3.5 SWPMI Bit rate

The bit rate must be set in the SWPMI_BRR register, according to the following formula:

$F_{SWP} = F_{SWPCLK} / ((BR[5:0]+1)x4)$

Note: The maximum bitrate is 2 Mbit/s.

44.3.6 SWPMI frame handling

The SWP frame is composed of a Start of frame (SOF), a Payload from 1 to 30 bytes, a 16-bit CRC and an End of frame (EOF) (Refer to *Figure 491: SWP frame structure*).

Figure 491. SWP frame structure

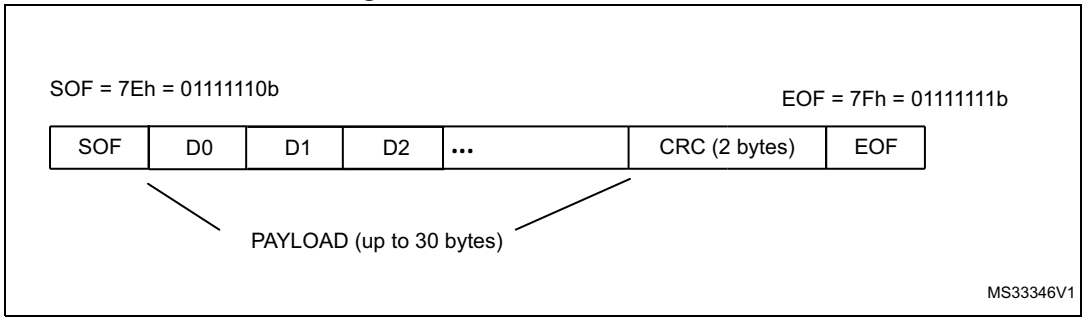

The SWPMI embeds one 32-bit data register for transmission (SWPMI_TDR), and one 32-bit data register for reception (SWPMI_RDR).

In transmission, the SOF insertion, the CRC calculation and insertion, and the EOF insertion are managed automatically by the SWPMI. The user only has to provide the Payload content and size. A frame transmission starts as soon as data is written into the SWPMI_TDR register. Dedicated flags indicate an empty transmit data register and a complete frame transmission event.

In reception, the SOF deletion, the CRC calculation and checking, and the EOF deletion are managed automatically by the SWPMI. The user only has to read the Payload content and size. Dedicated flags indicate a full receive data register, a complete frame reception and possibly CRC error events.

The stuffing bits insertion (in transmission) and stuffing bits deletion (in reception) are managed automatically by the SWPMI core. These operations are transparent for the user.

44.3.7 Transmission procedure

Before starting any frame transmission, the user must activate the SWP. Refer to *Section 44.3.2: SWP initialization and activation*.

There are several possible software implementations for a frame transmission: No software buffer mode, Single software buffer mode, and Multi software buffer mode.

The software buffer usage requires the use of a DMA channel to transfer data from the software buffer in the RAM memory to the transmit data register in the SWPMI peripheral.

No software buffer mode

This mode does not require the use of DMA. The SWP frame transmission handling is done by polling status flags in the main loop or inside the SWPMI interrupt routine. There is a 32-bit transmit data register (SWPMI_TDR) in the SWPMI, thus writing to this register will trigger the transmission of up to 4 bytes.

The No software buffer mode is selected by clearing TXDMA bit in the SWPMI_CR register.

The frame transmission is started by the first write to the SWPMI_TDR register. The low significant byte of the first 32-bit word (bits [7:0]) written into the SWPMI_TDR register) indicates the number of data bytes in the payload, and the 3 other bytes of this word must

contain the first 3 bytes of the payload (bits [15:8] contain the first byte of the payload, bits [23:16] the second byte and bits [31:24] the third byte). Then, the following writes to the SWPMI_TDR register will only contain the following payload data bytes, up to 4 for each write.

Note: The low significant byte of the first 32-bit word written into the SWPMI_TDR register is coding the number of data bytes in the payload. This number could be from 1 to 30. Any other value in the low significant byte will be ignored and the transmission will not start.

Writing to the SWPMI_TDR register will induce the following actions:

- Send the transition sequence and 8 idle bits (RESUME by master) if the SWP bus state is SUPENDED (this will not happen if the SWP bus state is already ACTIVATED),
- Send a Start of frame (SOF),
- Send the payload according to the SWPMI_TRD register content. If the number of bytes in the payload is greater than 3, the SWPMI_TDR needs to be refilled by software, each time the TXE flag in the SWPMI_ISR register is set, and as long as the TXBEF flag is not set in the SWPMI_ISR register,
- Send the 16-bit CRC, automatically calculated by the SWPMI core,
- Send an End of frame (EOF).

The TXE flag is cleared automatically when the software is writing to the SWPMI_TDR register.

Once the complete frame is sent, provided that no other frame transmission has been requested (i.e. SWPMI_TDR has not been written again after the TXBEF flag setting), TCF and SUSP flags are set in the SWPMI_ISR register 7 idle bits after the EOF transmission, and an interrupt is generated if TCIE bit is set in the SWPMI_IER register (refer to *Figure 492: SWPMI No software buffer mode transmission*).

Figure 492. SWPMI No software buffer mode transmission

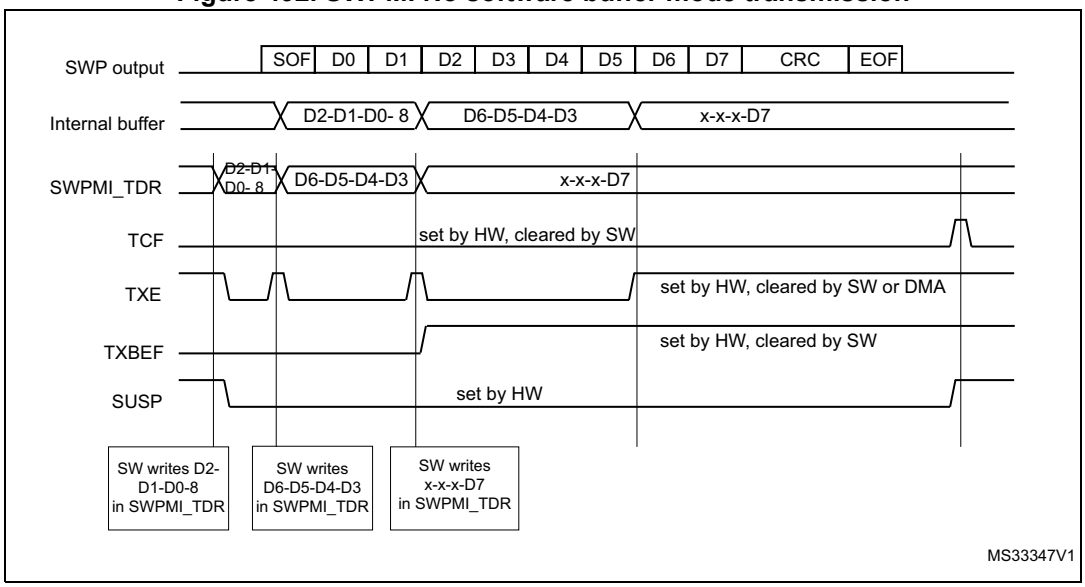

If another frame transmission is requested before the end of the EOF transmission, the TCF flag is not set and the frame will be consecutive to the previous one, with only one idle bit in between (refer to *Figure 493: SWPMI No software buffer mode transmission, consecutive frames*).

Figure 493. SWPMI No software buffer mode transmission, consecutive frames

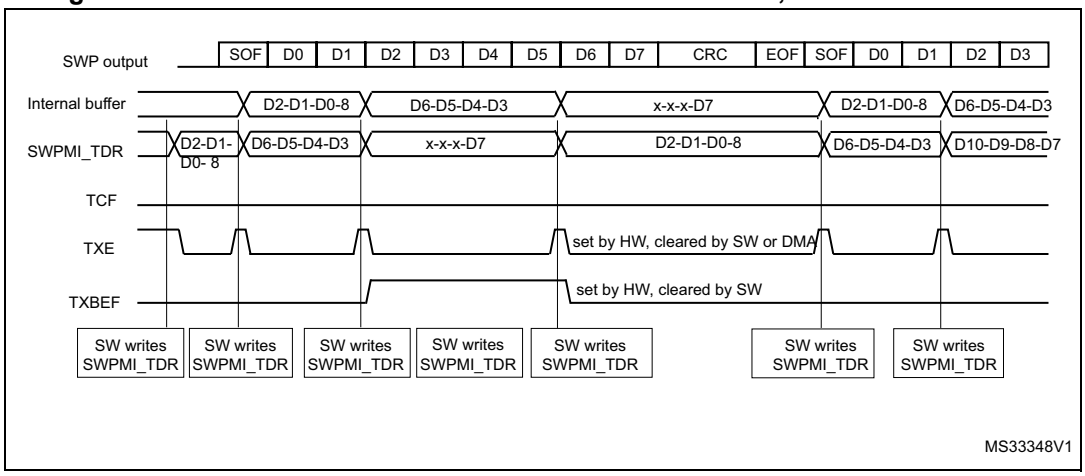

Single software buffer mode

This mode allows to transmit a complete SWP frame without a CPU intervention, using the DMA. The DMA will refill the 32-bit SWPMI_TDR register, and the software can poll the end of the frame transmission using the SWPMI_TXBEF flag.

The Single software buffer mode is selected by setting TXDMA bit and clearing TXMODE bit in the SWPMI_CR register.

The DMA channel or stream must be configured in following mode (refer to DMA section):

- memory to memory mode disabled,
- memory increment mode enabled,
- memory size set to 32-bit,
- peripheral size set to 32-bit,
- peripheral increment mode disabled,
- circular mode disabled,
- data transfer direction set to read from memory.
- the number of words to be transfered must be set according to the SWP frame length,
- the source address is the SWP frame buffer in RAM,
- the destination address is the SWPMI_TDR register.

Then the user must:

1. Set TXDMA bit in the SWPMI_CR register,
2. Set TXBEIE bit in the SWPMI_IER register,
3. Fill the buffer in the RAM memory (with the number of data bytes in the payload on the least significant byte of the first word),
4. Enable stream or channel in DMA module to start DMA transfer and frame transmission.

A DMA request is issued by SWPMI when TXE flag in SWPMI_ISR is set. The TXE flag is cleared automatically when the DMA is writing to the SWPMI_TDR register.

In the SWPMI interrupt routine, the user must check TXBEF bit in the SWPMI_ISR register. If it is set, and if another frame needs to be transmitted, the user must:

1. Disable stream or channel in DMA module
2. Update the buffer in the RAM memory with the content of the next frame to be sent
3. Configure the total number of words to be transferred in DMA module
4. Enable stream or channel in DMA module to start next frame transmission
5. Set CTXBEF bit in the SWPMI_ICR register to clear the TXBEF flag

Multi software buffer mode

This mode allows to work with several frame buffers in the RAM memory, in order to ensure a continuous transmission, keeping a very low CPU load, and allowing more latency for buffer update by software thanks to the DMA. The software can check the DMA counters at any time and update SWP frames accordingly in the RAM memory.

The Multi software buffer mode must be used in combination with DMA in circular mode.

Each transmission buffer in the RAM memory must have a fixed length of eight 32-bit words, whatever the number of bytes in the SWP frame payload. The transmission buffers in the RAM memory must be filled by the software, keeping an offset of 8 between two consecutive ones. The first data byte of the buffer is the number of bytes of the frame payload. See the buffer example in *Figure 494: SWPMI Multi software buffer mode transmission*

The Multi software buffer mode is selected by setting both TXDMA and TXMODE bits in SWPMI_CR register.

For example, in order to work with 4 transmission buffers, the user must configure the DMA as follows:

The DMA channel or stream must be configured in following mode (refer to DMA section):

- memory to memory mode disabled,
- memory increment mode enabled,
- memory size set to 32-bit,
- peripheral size set to 32-bit,
- peripheral increment mode disabled,
- circular mode enabled,
- data transfer direction set to read from memory,
- the number of words to be transfered must be set to 32 (8 words per buffer),
- the source address is the buffer1 in RAM,
- the destination address is the SWPMI_TDR register.

Then, the user must:

1. Set TXDMA in the SWPMI_CR register
2. Set TXBEIE in the SWPMI_IER register
3. Fill buffer1, buffer2, buffer3 and buffer4 in the RAM memory (with the number of data bytes in the payload on the least significant byte of the first word)
4. Enable stream or channel in DMA module to start DMA.

In the SWPMI interrupt routine, the user must check TXBEF bit in the SWPMI_ISR register. If it is set, the user must set CTXBEF bit in SWPMI_ICR register to clear TXBEF flag and the user can update buffer1 in the RAM memory.

In the next SWPMI interrupt routine occurrence, the user will update buffer2, and so on.

The Software can also read the DMA counter (number of data to transfer) in the DMA registers in order to retrieve the frame which has already been transferred from the RAM memory and transmitted. For example, if the software works with 4 transmission buffers, and if the DMA counter equals 17, it means that two buffers are ready for updating in the RAM area. This is useful in case several frames are sent before the software can handle the SWPMI interrupt. If this happens, the software will have to update several buffers.

When there are no more frames to transmit, the user must disable the circular mode in the DMA module. The transmission will stop at the end of the buffer4 transmission.

If the transmission needs to stop before (for example at the end of buffer2), the user must set the low significant byte of the first word to 0 in buffer3 and buffer4.

TXDMA bit in the SWPMI_CR register will be cleared by hardware as soon as the number of data bytes in the payload is read as 0 in the least significant byte of the first word.

Figure 494. SWPMI Multi software buffer mode transmission

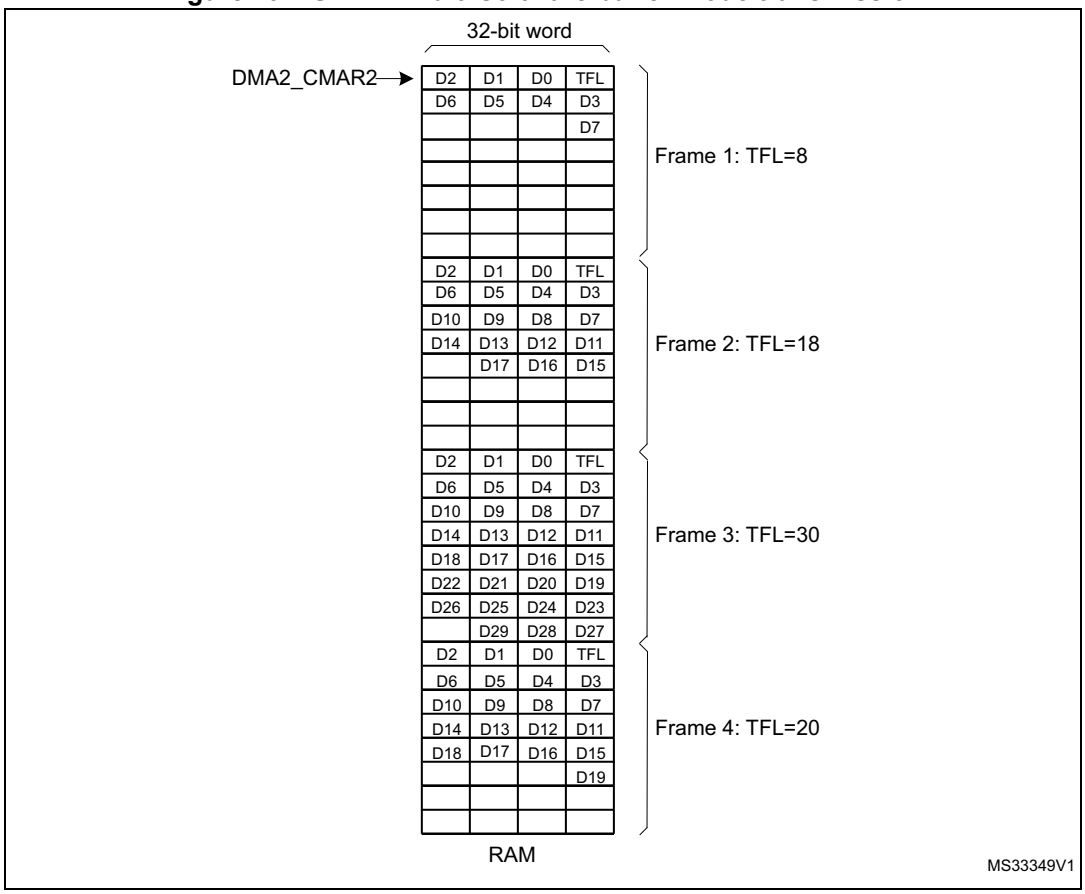

44.3.8 Reception procedure

Before starting any frame reception, the user must activate the SWP (refer to *Section 44.3.2: SWP initialization and activation*.

Once SWPACT bit is set in the SWPMI_CR register, a RESUME from slave state sets the SRF flag in the SWPMI_ISR register and automatically enables the SWPMI for the frame reception.

If the SWP bus is already in the ACTIVATED state (for example because a frame transmission is ongoing), the SWPMI core does not need any RESUME by slave state, and the reception can take place immediately.

There are several possible software implementations for a frame reception:

- No software buffer mode,
- Single software buffer mode,
- Multi software buffer mode.

The software buffer usage requires the use of a DMA channel to transfer data from the receive data register in the SWPMI peripheral to the software buffer in the RAM memory.

No software buffer mode

This mode does not require the use of DMA. The SWP frame reception handling is done by polling status flags in the main loop or inside the SWPMI interrupt routine. There is a 32-bit receive data register (SWPMI_RDR) in the SWPMI, allowing to receive up to 4 bytes before reading this register.

The No software buffer mode is selected by resetting RXDMA bit in the SWPMI_CR register.

Once a Start of frame (SOF) is received, the following bytes (payload) are stored in the SWPMI_RDR register. Once the SWPMI_RDR is full, the RXNE flag is set in SWPMI_ISR and an interrupt is generated if RIE bit is set in SWPMI_IER register. The user can read the SWPMI_RDR register and the RXNE flag is cleared automatically when the software is reading the SWPMI_RDR register.

Once the complete frame has been received, including the CRC and the End of frame (EOF), both RXNE and RXBFF flags are set in the SWPMI_ISR register. The user must read the last byte(s) of the payload in the SWPMI_RDR register and set CRXBFF flag in SWPMI_ICR in order to clear the RXBFF flag. The number of data bytes in the payload is available in the SWPMI_RFL register. Again, the RXNE flag is reset automatically when the software is reading the SWPMI_RDR register (refer to *Figure 495: SWPMI No software buffer mode reception*).

Reading the SWPMI_RDR register while RXNE is cleared will return 0.

Figure 495. SWPMI No software buffer mode reception

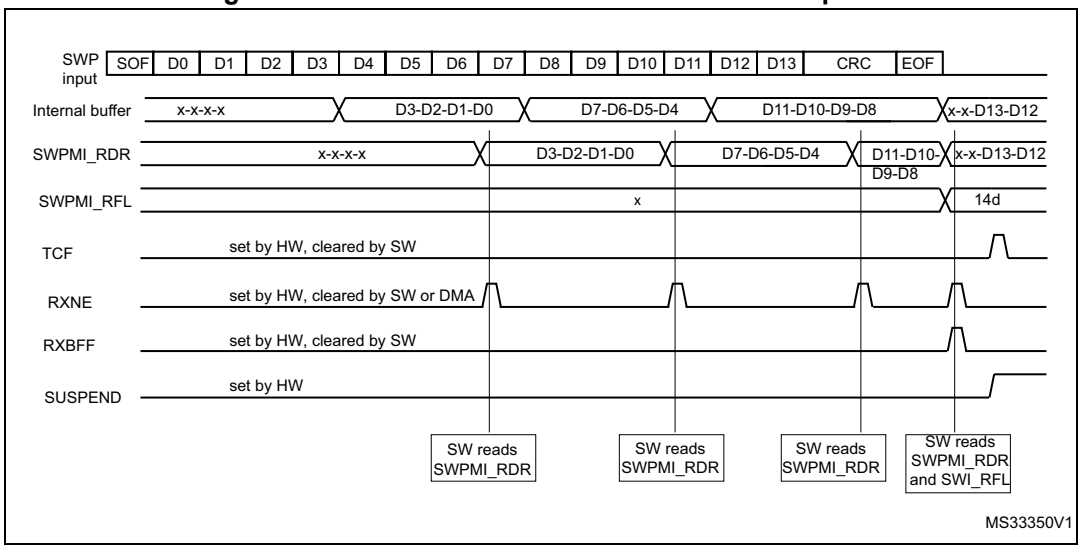

Single software buffer mode

This mode allows to receive a complete SWP frame without any CPU intervention using the DMA. The DMA transfers received data from the 32-bit SWPMI_RDR register to the RAM memory, and the software can poll the end of the frame reception using the SWPMI_RBFF flag.

The Single software buffer mode is selected by setting RXDMA bit and clearing RXMODE bit in the SWPMI_CR register.

The DMA must be configured as follows:

The DMA channel or stream must be configured in following mode (refer to DMA section):

- memory to memory mode disabled,
- memory increment mode enabled,
- memory size set to 32-bit,
- peripheral size set to 32-bit,
- peripheral increment mode disabled,
- circular mode disabled,
- data transfer direction set to read from peripheral,
- the number of words to be transfered must be set to 8,
- the source address is the SWPMI_RDR register,
- the destination address is the SWP frame buffer in RAM.

Then the user must:

1. Set RXDMA bit in the SWPMI_CR register
2. Set RXBFIE bit in the SWPMI_IER register
3. Enable stream or channel in DMA module.

A DMA request is issued by SWPMI when RXNE flag is set in SWPMI_ISR. The RXNE flag is cleared automatically when the DMA is reading the SWPMI_RDR register.

In the SWPMI interrupt routine, the user must check RXBFF bit in the SWPMI_ISR register. If it is set, the user must:

1. Disable stream or channel in DMA module
2. Read the number of bytes in the received frame payload in the SWPMI_RFL register
3. Read the frame payload in the RAM buffer
4. Enable stream or channel in DMA module
5. Set CRXBFF bit in the SWPMI_ICR register to clear RXBFF flag (refer to *Figure 496: SWPMI single software buffer mode reception*).

Figure 496. SWPMI single software buffer mode reception

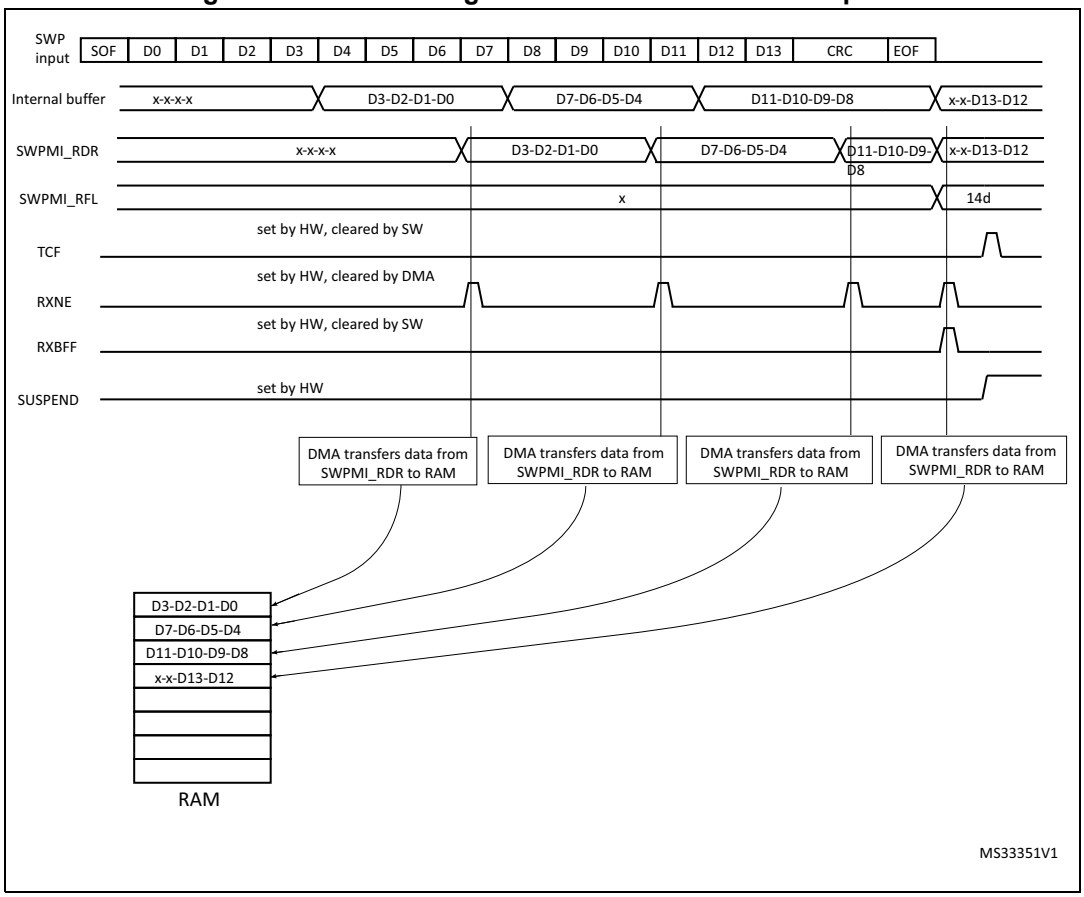

Multi software buffer mode

This mode allows to work with several frame buffers in the RAM memory, in order to ensure a continuous reception, keeping a very low CPU load, using the DMA. The frame payloads are stored in the RAM memory, together with the frame status flags. The software can check the DMA counters and status flags at any time to handle the received SWP frames in the RAM memory.

The Multi software buffer mode must be used in combination with the DMA in circular mode.

The Multi software buffer mode is selected by setting both RXDMA and RXMODE bits in SWPMI_CR register.

In order to work with n reception buffers in RAM, the DMA channel or stream must be configured in following mode (refer to DMA section):

- memory to memory mode disabled,
- memory increment mode enabled,
- memory size set to 32-bit,
- peripheral size set to 32-bit,
- peripheral increment mode disabled,
- circular mode enabled,
- data transfer direction set to read from peripheral,
- the number of words to be transfered must be set to 8 x n (8 words per buffer),
- the source address is the SWPMI_TDR register,
- the destination address is the buffer1 address in RAM

Then the user must:

1. Set RXDMA in the SWPMI_CR register
2. Set RXBFIE in the SWPMI_IER register
3. Enable stream or channel in the DMA module.

In the SWPMI interrupt routine, the user must check RXBFF in the SWPMI_ISR register. If it is set, the user must set CRXBFF bit in the SWPMI_ICR register to clear RXBFF flag and the user can read the first frame payload received in the first buffer (at the RAM address set in DMA2_CMAR1).

The number of data bytes in the payload is available in bits [23:16] of the last 8th word.

In the next SWPMI interrupt routine occurrence, the user will read the second frame received in the second buffer (address set in DMA2_CMAR1 + 8), and so on (refer to *Figure 497: SWPMI Multi software buffer mode reception*).

In case the application software cannot ensure to handle the SMPMI interrupt before the next frame reception, each buffer status is available in the most significant byte of the 8th buffer word:

- The CRC error flag (equivalent to RXBERF flag in the SWPMI_ISR register) is available in bit 24 of the 8th word. Refer to *Section 44.3.9: Error management* for an CRC error description.
- The receive overrun flag (equivalent to RXOVRF flag in the SWPMI_ISR register) is available in bit 25 of the 8th word. Refer to *Section 44.3.9: Error management* for an overrun error description.
- The receive buffer full flag (equivalent to RXBFF flag in the SWPMI_ISR register) is available in bit 26 of the 8th word.

In case of a CRC error, both RXBFF and RXBERF flags are set, thus bit 24 and bit 26 are set.

In case of an overrun, an overrun flag is set, thus bit 25 is set. The receive buffer full flag is set only in case of an overrun during the last word reception; then, both bit 25 and bit 26 are set for the current and the next frame reception.

The software can also read the DMA counter (number of data to transfer) in the DMA registers in order to retrieve the frame which has already been received and transferred into the RAM memory through DMA. For example, if the software works with 4 reception buffers,

and if the DMA counter equals 17, it means that two buffers are ready for reading in the RAM area.

In Multi software buffer reception mode, if the software is reading bits 24, 25 and 26 of the 8th word, it does not need to clear RXBERF, RXOVRF and RXBFF flags after each frame reception.

Figure 497. SWPMI Multi software buffer mode reception

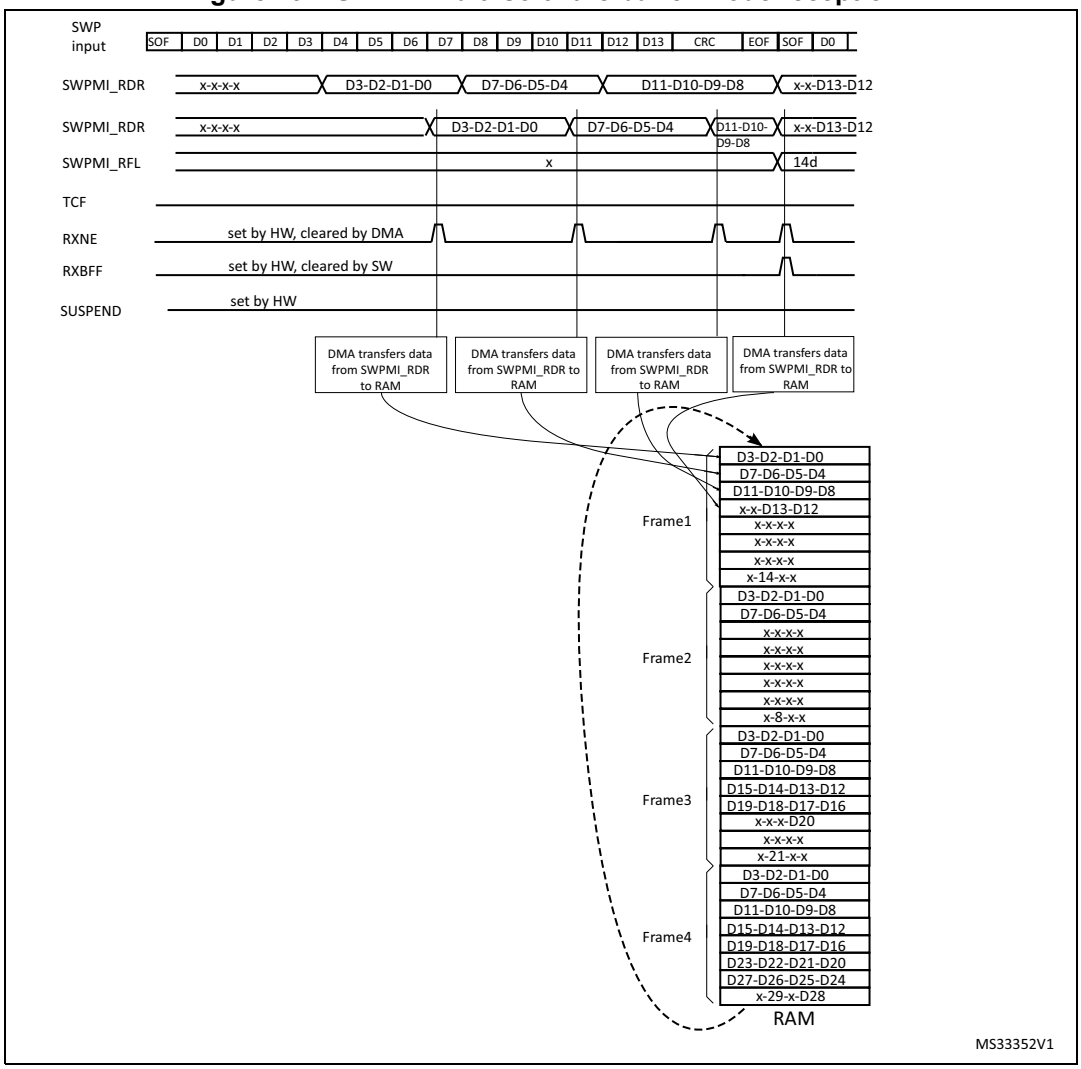

44.3.9 Error management

Underrun during payload transmission

During the transmission of the frame payload, a transmit underrun is indicated by the TXUNRF flag in the SWPMI_ISR register. An interrupt is generated if TXBUNREIE bit is set in the SWPMI_IER register.

If a transmit underrun occurs, the SWPMI stops the payload transmission and sends a corrupted CRC (the first bit of the first CRC byte sent is inverted), followed by an EOF. If DMA is used, TXDMA bit in the SWPMI_CR register is automatically cleared.

Any further write to the SWPMI_TDR register while TXUNRF is set will be ignored. The user must set CTXUNRF bit in the SWPMI_ICR register to clear TXUNRF flag.

Overrun during payload reception

During the reception of the frame payload, a receive overrun is indicated by RXOVRF flag in the SWPMI_ISR register. If a receive overrun occurs, the SWPMI does not update SWPMI_RDR with the incoming data. The incoming data will be lost.

The reception carries on up to the EOF and, if the overrun condition disappears, the RXBFF flag is set. When RXBFF flag is set, the user can check the RXOVRF flag. The user must set CRXOVRF bit in the SWPMI_ICR register to clear RXBOVRF flag.

If the user wants to detect the overrun immediately, RXBOVREIE bit in the SWPMI_IER register can be set in order to generate an interrupt as soon as the overrun occurs.

The RXOVRF flag is set at the same time as the RXNE flag, two SWPMI_RDR reads after the overrun event occurred. It indicates that at least one received byte was lost, and the loaded word in SWPMI_RDR contains the bytes received just before the overrun.

In Multi software buffer mode, if RXOVRF flag is set for the last word of the received frame, then the overrun bit (bit 25 of the 8th word) is set for both the current and the next frame.

CRC error during payload reception

Once the two CRC bytes have been received, if the CRC is wrong, the RXBERF flag in the SWPMI_ISR register is set after the EOF reception. An interrupt is generated if RXBEIE bit in the SWPMI_IER register is set (refer to*Figure 498: SWPMI single buffer mode reception with CRC error*).The user must set CRXBERF bit in SWPMI_ICR to clear RXBERF flag.

Figure 498. SWPMI single buffer mode reception with CRC error

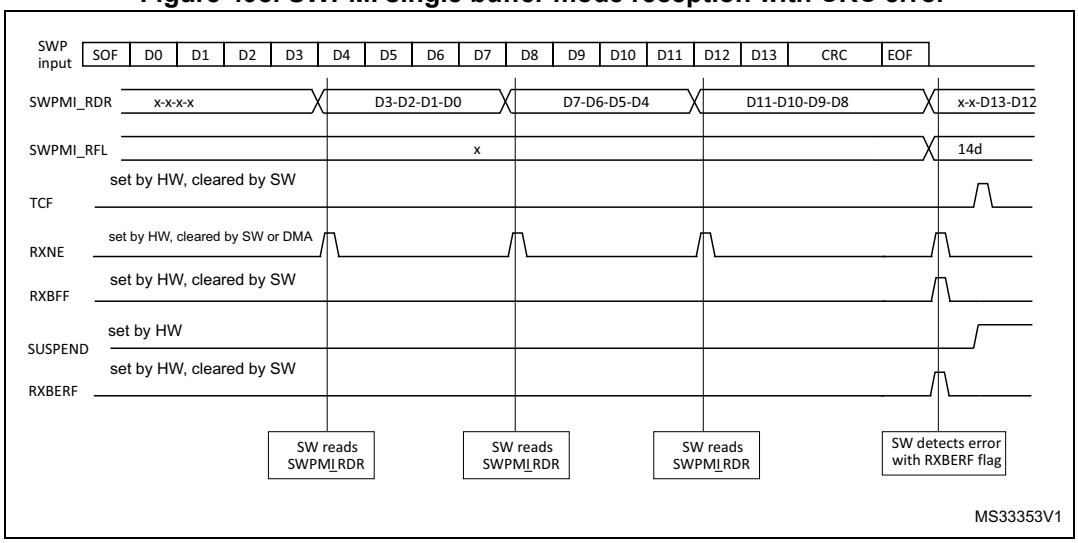

Missing or corrupted stuffing bit during payload reception

When a stuffing bit is missing or is corrupted in the payload, RXBERF and RXBFF flags are set in SWPMI_ISR after the EOF reception.

Corrupted EOF reception

Once an SOF has been received, the SWPMI accumulates the received bytes until the reception of an EOF (ignoring any possible SOF). Once an EOF has been received, the SWPMI is ready to start a new frame reception and waits for an SOF.

In case of a corrupted EOF, RXBERF and RXBFF flags will bet set in the SWPMI_ISR register after the next EOF reception.

Note: In case of a corrupted EOF reception, the payload reception carries on, thus the number of bytes in the payload might get the value 31 if the number of received bytes is greater than 30. The number of bytes in the payload is read in the SWPMI_RFL register or in bits [23:16] of the 8th word of the buffer in the RAM memory, depending on the operating mode.

44.3.10 Loopback mode

The loopback mode can be used for test purposes. The user must set LPBK bit in the SWPMI_CR register in order to enable the loopback mode.

When the loopback mode is enabled, SWPMI_TX and SWPMI_RX signals are connected together. As a consequence, all frames sent by the SWPMI will be received back.

44.4 SWPMI low-power modes

Table 275. Effect of low-power modes on SWPMI

Mode	Description
Sleep	No effect. SWPMI interrupts cause the device to exit the Sleep mode.
Low-power run	No effect.
Low-power sleep	No effect. SWPMI interrupts cause the device to exit the Low-power sleep mode.
Stop 0 / Stop 1	SWPMI registers content is kept. A RESUME from SUSPENDED mode issued by the slave can wake up the device from Stop 0 and Stop 1 modes if the SWPCLK is HSI16 (refer to *Section 44.3.1: SWPMI block diagram*).
Stop 2	SWPMI registers content is kept. SWPMI must be disabled before entering Stop 2.
Standby	The SWPMI peripheral is powered down and must be reinitialized after exiting Standby or Shutdown mode.
Shutdown	

44.5 SWPMI interrupts

All SWPMI interrupts are connected to the NVIC.

To enable the SWPMI interrupt, the following sequence is required:

1. Configure and enable the SWPMI interrupt channel in the NVIC
2. Configure the SWPMI to generate SWPMI interrupts (refer to the SWPMI_IER register).

Table 276. Interrupt control bits

Interrupt event	Event flag	Enable control bit	Exit the Sleep mode	Exit the Stop mode	Exit the Standby mode
Receive buffer full	RXBFF	RXBFIE	yes	no	no
Transmit buffer empty	TXBEF	TXBEIE	yes	no	no
Receive buffer error (CRC error)	RXBERF	RXBEIE	yes	no	no
Receive buffer overrun	RXOVRF	RXBOVEREIE	yes	no	no
Transmit buffer underrun	TXUNRF	TXBUNREIE	yes	no	no
Receive data register not empty	RXNE	RIE	yes	no	no
Transmit data register full	TXE	TIE	yes	no	no
Transfer complete flag	TCF	TCIE	yes	no	no
Slave resume flag	SRF	SRIE	yes	yes (1)	no

1. If HSI16 is selected for SWPCLK.

44.6 SWPMI registers

Refer to *Section 1.2* of the reference manual for a list of abbreviations used in register descriptions.

The peripheral registers can only be accessed by words (32-bit).

44.6.1 SWPMI Configuration/Control register (SWPMI_CR)

Address offset: 0x00

Reset value: 0x0000 0000

31	30	29	28	27	26	25	24	23	22	21	20	19	18	17	16
Res.	Res.	Res.	Res.	Res.	Res.	Res.	Res.	Res.	Res.	Res.	Res.	Res.	Res.	Res.	Res.

15	14	13	12	11	10	9	8	7	6	5	4	3	2	1	0
Res.	Res.	Res.	Res.	Res.	DEACT	Res.	Res.	Res.	Res.	SWP ACT	LPBK	TXMOD E	RXMO DE	TXDMA	RXDMA
					rw					rw	rw	rw	rw	rw	rw

Bits 31:11 Reserved, must be kept at reset value.

Bit 10 **DEACT**: Single wire protocol master interface deactivate

This bit is used to request the SWP DEACTIVATED state. Setting this bit has the same effect as clearing the SWPACT, except that a possible incoming RESUME by slave will keep the SWP in the ACTIVATED state.

Bits 9:6 Reserved, must be kept at reset value.

Bit 5 **SWPACT**: Single wire protocol master interface activate

This bit is used to activate the SWP bus (refer to *Section 44.3.2: SWP initialization and activation*).

0: SWPMI_IO is pulled down to ground, SWP bus is switched to DEACTIVATED state

1: SWPMI_IO is released, SWP bus is switched to SUSPENDED state

To be able to set SWPACT bit, DEACT bit must be have been cleared previously.

Bit 4 **LPBK**: Loopback mode enable

This bit is used to enable the loopback mode

0: Loopback mode is disabled

1: Loopback mode is enabled

Note: This bit cannot be written while SWPACT bit is set.

Bit 3 **TXMODE**: Transmission buffering mode

This bit is used to choose the transmission buffering mode. This bit is relevant only when TXDMA bit is set (refer to *Table 277: Buffer modes selection for transmission/reception*).

0: SWPMI is configured in Single software buffer mode for transmission

1: SWPMI is configured in Multi software buffer mode for transmission.

Note: This bit cannot be written while SWPACT bit is set.

Bit 2 **RXMODE**: Reception buffering mode

This bit is used to choose the reception buffering mode. This bit is relevant only when TXDMA bit is set (refer to *Table 277: Buffer modes selection for transmission/reception*).

0: SWPMI is configured in Single software buffer mode for reception

1: SWPMI is configured in Multi software buffer mode for reception.

Note: This bit cannot be written while SWPACT bit is set.

Bit 1 **TXDMA**: Transmission DMA enable

This bit is used to enable the DMA mode in transmission

0: DMA is disabled for transmission

1: DMA is enabled for transmission

Note: TXDMA is automatically cleared if the payload size of the transmitted frame is given as 0x00 (in the least significant byte of TDR for the first word of a frame). TXDMA is also automatically cleared on underrun events (when TXUNRF flag is set in the SWP_ISR register)

Bit 0 **RXDMA**: Reception DMA enable

This bit is used to enable the DMA mode in reception

0: DMA is disabled for reception

1: DMA is enabled for reception

Table 277. Buffer modes selection for transmission/reception

Buffer mode	No software buffer	Single software buffer	Multi software buffer
RXMODE/TXMODE	x	0	1
RXDMA/TXDMA	0	1	1

44.6.2 SWPMI Bitrate register (SWPMI_BRR)

Address offset: 0x04

Reset value: 0x0000 0001

31	30	29	28	27	26	25	24	23	22	21	20	19	18	17	16
Res.	Res.	Res.	Res.	Res.	Res.	Res.	Res.	Res.	Res.	Res.	Res.	Res.	Res.	Res.	Res.

15	14	13	12	11	10	9	8	7	6	5	4	3	2	1	0
Res.	Res.	Res.	Res.	Res.	Res.	Res.	Res.	Res.	Res.	BR[5:0]					
										rw	rw	rw	rw	rw	rw

Bits 31:6 Reserved, must be kept at reset value.

Bits 5:0 **BR[5:0]**: Bitrate prescaler

This field must be programmed to set SWP bus bitrate, taking into account the F_{SWPCLK} programmed in the RCC (Reset and Clock Control), according to the following formula:

$F_{SWP} = F_{SWPCLK} / ((BR[5:0]+1)x4)$

Note: The programmed bitrate must stay within the following range: from 100 kbit/s up to 2 Mbit/s.

BR[5:0] cannot be written while SWPACT bit is set in the SWPMI_CR register.

44.6.3 SWPMI Interrupt and Status register (SWPMI_ISR)

Address offset: 0x0C

Reset value: 0x0000 02C2

31	30	29	28	27	26	25	24	23	22	21	20	19	18	17	16
Res.	Res.	Res.	Res.	Res.	Res.	Res.	Res.	Res.	Res.	Res.	Res.	Res.	Res.	Res.	Res.
15	14	13	12	11	10	9	8	7	6	5	4	3	2	1	0
Res.	Res.	Res.	Res.	Res.	DEACTF	SUSP	SRF	TCF	TXE	RXNE	TXUNRF	RXOVRF	RXBERF	TXBEF	RXBFF
					r	r	r	r	r	r	r	r	r	r	r

Bits 31:11 Reserved, must be kept at reset value.

Bit 10 **DEACTF**: DEACTIVATED flag

This bit is a status flag, acknowledging the request to enter the DEACTIVATED mode.
0: SWP bus is in ACTIVATED or SUSPENDED state
1: SWP bus is in DEACTIVATED state
If a RESUME by slave state is detected by the SWPMI while DEACT bit is set by software, the SRF flag will be set, DEACTF will not be set and SWP will move in ACTIVATED state.

Bit 9 **SUSP**: SUSPEND flag

This bit is a status flag, reporting the SWP bus state
0: SWP bus is in ACTIVATED state
1: SWP bus is in SUSPENDED or DEACTIVATED state

Bit 8 **SRF**: Slave resume flag

This bit is set by hardware to indicate a RESUME by slave detection. It is cleared by software, writing 1 to CSRF bit in the SWPMI_ICR register.
0: No Resume by slave state detected
1: A Resume by slave state has been detected during the SWP bus SUSPENDED state

Bit 7 **TCF**: Transfer complete flag

This flag is set by hardware as soon as both transmission and reception are completed and SWP is switched to the SUSPENDED state. It is cleared by software, writing 1 to CTCF bit in the SWPMI_ICR register.
0: Transmission or reception is not completed
1: Both transmission and reception are completed and SWP is switched to the SUSPENDED state

Bit 6 **TXE**: Transmit data register empty

This flag indicates the transmit data register status
0: Data written in transmit data register SWPMI_TDR is not transmitted yet
1: Data written in transmit data register SWPMI_TDR has been transmitted and SWPMI_TDR can be written to again

Bit 5 **RXNE**: Receive data register not empty

This flag indicates the receive data register status
0: Data is not received in the SWPMI_RDR register
1: Received data is ready to be read in the SWPMI_RDR register

Bit 4 **TXUNRF**: Transmit underrun error flag

This flag is set by hardware to indicate an underrun during the payload transmission i.e. SWPMI_TDR has not been written in time by the software or the DMA. It is cleared by software, writing 1 to the CTXUNRF bit in the SWPMI_ICR register.

0: No underrun error in transmission

1: Underrun error in transmission detected

Bit 3 **RXOVRF**: Receive overrun error flag

This flag is set by hardware to indicate an overrun during the payload reception, i.e. SWPMI_RDR has not be read in time by the software or the DMA. It is cleared by software, writing 1 to CRXOVRF bit in the SWPMI_ICR register.

0: No overrun in reception

1: Overrun in reception detected

Bit 2 **RXBERF**: Receive CRC error flag

This flag is set by hardware to indicate a CRC error in the received frame. It is set synchronously with RXBFF flag. It is cleared by software, writing 1 to CRXBERF bit in the SWPMI_ICR register.

0: No CRC error in reception

1: CRC error in reception detected

Bit 1 **TXBEF**: Transmit buffer empty flag

This flag is set by hardware to indicate that no more SWPMI_TDR update is required to complete the current frame transmission. It is cleared by software, writing 1 to CTXBEF bit in the SWPMI_ICR register.

0: Frame transmission buffer no yet emptied

1: Frame transmission buffer has been emptied

Bit 0 **RXBFF**: Receive buffer full flag

This flag is set by hardware when the final word for the frame under reception is available in SWPMI_RDR. It is cleared by software, writing 1 to CRXBFF bit in the SWPMI_ICR register.

0: The last word of the frame under reception has not yet arrived in SWPMI_RDR

1: The last word of the frame under reception has arrived in SWPMI_RDR

44.6.4 SWPMI Interrupt Flag Clear register (SWPMI_ICR)

Address offset: 0x10

Reset value: 0x0000 0000

31	30	29	28	27	26	25	24	23	22	21	20	19	18	17	16
Res.	Res.	Res.	Res.	Res.	Res.	Res.	Res.	Res.	Res.	Res.	Res.	Res.	Res.	Res.	Res.

15	14	13	12	11	10	9	8	7	6	5	4	3	2	1	0
Res.	Res.	Res.	Res.	Res.	Res.	Res.	CSRF	CTCF	Res.	Res.	CTXUNRF	CRXOVRF	CRXBERF	CTXBEF	CRXBFF
							rc_w1	rc_w1			rc_w1	rc_w1	rc_w1	rc_w1	rc_w1

Bits 31:9 Reserved, must be kept at reset value

Bit 8 **CSRF**: Clear slave resume flag
Writing 1 to this bit clears the SRF flag in the SWPMI_ISR register
Writing 0 to this bit does not have any effect

Bit 7 **CTCF**: Clear transfer complete flag
Writing 1 to this bit clears the TCF flag in the SWPMI_ISR register
Writing 0 to this bit does not have any effect

Bits 6:5 Reserved, must be kept at reset value.

Bit 4 **CTXUNRF**: Clear transmit underrun error flag
Writing 1 to this bit clears the TXUNRF flag in the SWPMI_ISR register
Writing 0 to this bit does not have any effect

Bit 3 **CRXOVRF**: Clear receive overrun error flag
Writing 1 to this bit clears the RXBOCREF flag in the SWPMI_ISR register
Writing 0 to this bit does not have any effect

Bit 2 **CRXBERF**: Clear receive CRC error flag
Writing 1 to this bit clears the RXBERF flag in the SWPMI_ISR register
Writing 0 to this bit does not have any effect

Bit 1 **CTXBEF**: Clear transmit buffer empty flag
Writing 1 to this bit clears the TXBEF flag in the SWPMI_ISR register
Writing 0 to this bit does not have any effect

Bit 0 **CRXBFF**: Clear receive buffer full flag
Writing 1 to this bit clears the RXBFF flag in the SWPMI_ISR register
Writing 0 to this bit does not have any effect

44.6.5 SWPMI Interrupt Enable register (SMPMI_IER)

Address offset: 0x14

Reset value: 0x0000 0000

31	30	29	28	27	26	25	24	23	22	21	20	19	18	17	16
Res.	Res.	Res.	Res.	Res.	Res.	Res.	Res.	Res.	Res.	Res.	Res.	Res.	Res.	Res.	Res.

15	14	13	12	11	10	9	8	7	6	5	4	3	2	1	0
Res.	Res.	Res.	Res.	Res.	Res.	Res.	SRIE	TCIE	TIE	RIE	TXUNREIE	RXOVREIE	RXBEIE	TXBERIE	RXBFIE
							rw	rw	rw	rw	rw	rw	rw	rw	rw

Bits 31:9 Reserved, must be kept at reset value

Bit 8 **SRIE**: Slave resume interrupt enable
0: Interrupt is inhibited
1: An SWPMI interrupt is generated whenever SRF flag is set in the SWPMI_ISR register

Bit 7 **TCIE**: Transmit complete interrupt enable
0: Interrupt is inhibited
1: An SWPMI interrupt is generated whenever TCF flag is set in the SWPMI_ISR register

Bit 6 **TIE**: Transmit interrupt enable
0: Interrupt is inhibited
1: An SWPMI interrupt is generated whenever TXE flag is set in the SWPMI_ISR register

Bit 5 **RIE**: Receive interrupt enable
0: Interrupt is inhibited
1: An SWPMI interrupt is generated whenever RXNE flag is set in the SWPMI_ISR register

Bit 4 **TXUNRIE**: Transmit underrun error interrupt enable
0: Interrupt is inhibited
1: An SWPMI interrupt is generated whenever TXBUNRF flag is set in the SWPMI_ISR register

Bit 3 **RXOVRIE**: Receive overrun error interrupt enable
0: Interrupt is inhibited
1: An SWPMI interrupt is generated whenever RXBOVRF flag is set in the SWPMI_ISR register

Bit 2 **RXBERIE**: Receive CRC error interrupt enable
0: Interrupt is inhibited
1: An SWPMI interrupt is generated whenever RXBERF flag is set in the SWPMI_ISR register

Bit 1 **TXBEIE**: Transmit buffer empty interrupt enable
0: Interrupt is inhibited
1: An SWPMI interrupt is generated whenever TXBEF flag is set in the SWPMI_ISR register

Bit 0 **RXBFIE**: Receive buffer full interrupt enable
0: Interrupt is inhibited
1: An SWPMI interrupt is generated whenever RXBFF flag is set in the SWPMI_ISR register

44.6.6 SWPMI Receive Frame Length register (SWPMI_RFL)

Address offset: 0x18

Reset value: 0x0000 0000

31	30	29	28	27	26	25	24	23	22	21	20	19	18	17	16
Res.	Res.	Res.	Res.	Res.	Res.	Res.	Res.	Res.	Res.	Res.	Res.	Res.	Res.	Res.	Res.

15	14	13	12	11	10	9	8	7	6	5	4	3	2	1	0
Res.	Res.	Res.	Res.	Res.	Res.	Res.	Res.	Res.	Res.	Res.	RFL[4:0]				
											r	r	r	r	r

Bits 31:5 Reserved, must be kept at reset value.

Bits 4:0 **RFL[4:0]**: Receive frame length
RFL[4:0] is the number of data bytes in the payload of the received frame. The two least significant bits RFL[1:0] give the number of relevant bytes for the last SWPMI_RDR register read.

44.6.7 SWPMI Transmit data register (SWPMI_TDR)

Address offset: 0x1C

Reset value: 0x0000 0000

31	30	29	28	27	26	25	24	23	22	21	20	19	18	17	16
TD[31:16]															
w	w	w	w	w	w	w	w	w	w	w	w	w	w	w	w
15	14	13	12	11	10	9	8	7	6	5	4	3	2	1	0
TD[15:0]															
w	w	w	w	w	w	w	w	w	w	w	w	w	w	w	w

Bits 31:0 **TD[31:0]**: Transmit data

Contains the data to be transmitted.

Writing to this register triggers the SOF transmission or the next payload data transmission, and clears the TXE flag.

44.6.8 SWPMI Receive data register (SWPMI_RDR)

Address offset: 0x20

Reset value: 0x0000 0000

31	30	29	28	27	26	25	24	23	22	21	20	19	18	17	16
RD[31:16]															
r	r	r	r	r	r	r	r	r	r	r	r	r	r	r	r
15	14	13	12	11	10	9	8	7	6	5	4	3	2	1	0
RD[15:0]															
r	r	r	r	r	r	r	r	r	r	r	r	r	r	r	r

Bits 31:0 **RD[31:0]**: received data

Contains the received data

Reading this register is clearing the RXNE flag.

44.6.9 SWPMI Option register (SWPMI_OR)

Address offset: 0x24

Reset value: 0x0000 0000

31	30	29	28	27	26	25	24	23	22	21	20	19	18	17	16
Res.	Res.	Res.	Res.	Res.	Res.	Res.	Res.	Res.	Res.	Res.	Res.	Res.	Res.	Res.	Res.
15	14	13	12	11	10	9	8	7	6	5	4	3	2	1	0
														SWP_CLASS	SWP_TBYP
														rw	rw

Bits 31:2 Reserved, must be kept at reset value

Bit 1 **SWP_CLASS**: SWP class selection

This bit is used to select the SWP class (refer to *Section 44.3.2: SWP initialization and activation*).

0: Class C: SWPMI_IO uses directly VDD voltage to operate in class C.
This configuration must be selected when VDD is in the range [1.62 V to 1.98 V]

1: Class B: SWPMI_IO uses an internal voltage regulator to operate in class B.
This configuration must be selected when VDD is in the range [2.70 V to 3.30 V]

Bit 0 **SWP_TBYP**: SWP transceiver bypass

This bit is used to bypass the internal transceiver (SWPMI_IO), and connect an external transceiver.

0: Internal transceiver is enabled. The external interface for SWPMI is SWPMI_IO (SWPMI_RX, SWPMI_TX and SWPMI_SUSPEND signals are not available on GPIOs)

1: Internal transceiver is disabled. SWPMI_RX, SWPMI_TX and SWPMI_SUSPEND signals are available as alternate function on GPIOs. This configuration is selected to connect an external transceiver

44.6.10 SWPMI register map and reset value table

Table 278. SWPMI register map and reset values

Offset	Register name	31	30	29	28	27	26	25	24	23	22	21	20	19	18	17	16	15	14	13	12	11	10	9	8	7	6	5	4	3	2	1	0
0x00	SWPMI_CR	Res.	Res.	Res.	Res.	Res.	Res.	Res.	Res.	Res.	Res.	Res.	Res.	Res.	Res.	Res.	Res.	Res.	Res.	Res.	Res.	Res.	DEACT	Res.	Res.	Res.	Res.	SWPACT	LPBK	TXMODE	RXMODE	TXDMA	RXDMA
	Reset value																						0					0	0	0	0	0	0
0x04	SWPMI_BRR	Res.	Res.	Res.	Res.	Res.	Res.	Res.	Res.	Res.	Res.	Res.	Res.	Res.	Res.	Res.	Res.	Res.	Res.	Res.	Res.	Res.	Res.	Res.	Res.	Res.	Res.	BRR[5:0]					
	Reset value																											0	0	0	0	0	1
0x08	RESERVED	Res.	Res.	Res.	Res.	Res.	Res.	Res.	Res.	Res.	Res.	Res.	Res.	Res.	Res.	Res.	Res.	Res.	Res.	Res.	Res.	Res.	Res.	Res.	Res.	Res.	Res.	Res.	Res.	Res.	Res.	Res.	Res.
	Reset value																																
0x0C	SWPMI_ISR	Res.	Res.	Res.	Res.	Res.	Res.	Res.	Res.	Res.	Res.	Res.	Res.	Res.	Res.	Res.	Res.	Res.	Res.	Res.	Res.	Res.	DEACTF	SUSP	SRF	TCF	TXE	RXNE	TXUNRF	RXOVRF	RXBERF	TXBEF	RXBFF
	Reset value																						0	1	0	1	1	0	0	0	0	1	0
0x10	SWPMI_ICR	Res.	Res.	Res.	Res.	Res.	Res.	Res.	Res.	Res.	Res.	Res.	Res.	Res.	Res.	Res.	Res.	Res.	Res.	Res.	Res.	Res.	Res.	Res.	CSRF	CTCF	Res.	Res.	CTXUNRF	CRXOVRF	CRXBERF	CTXBEF	CRXBFF
	Reset value																								0	0			0	0	0	0	0
0x14	SWPMI_IER	Res.	Res.	Res.	Res.	Res.	Res.	Res.	Res.	Res.	Res.	Res.	Res.	Res.	Res.	Res.	Res.	Res.	Res.	Res.	Res.	Res.	Res.	Res.	SRIE	TCIE	TIE	RIE	TXUNRIE	RXOVRIE	RXBERIE	TXBEIE	RXBFIE
	Reset value																								0	0	0	0	0	0	0	0	0
0x18	SWPMI_RFL	Res.	Res.	Res.	Res.	Res.	Res.	Res.	Res.	Res.	Res.	Res.	Res.	Res.	Res.	Res.	Res.	Res.	Res.	Res.	Res.	Res.	Res.	Res.	Res.	Res.	Res.	Res.	RFL[4:0]				
	Reset value																												0	0	0	0	0
0x1C	SWPMI_TDR	TD[31:0]																															
	Reset value	0	0	0	0	0	0	0	0	0	0	0	0	0	0	0	0	0	0	0	0	0	0	0	0	0	0	0	0	0	0	0	0
0x20	SWPMI_RDR	RD[31:0]																															
	Reset value	0	0	0	0	0	0	0	0	0	0	0	0	0	0	0	0	0	0	0	0	0	0	0	0	0	0	0	0	0	0	0	0
0x24	SWPMI_OR	Res.	Res.	Res.	Res.	Res.	Res.	Res.	Res.	Res.	Res.	Res.	Res.	Res.	Res.	Res.	Res.	Res.	Res.	Res.	Res.	Res.	Res.	Res.	Res.	Res.	Res.	Res.	Res.	Res.	Res.	SWP_CLASS	SWP_TBYP
	Reset value																															0	0

Refer to *Section 2.2 on page 75* for the register boundary addresses.

45 SD/SDIO/MMC card host interface (SDMMC)

45.1 SDMMC main features

The SD/SDIO MMC card host interface (SDMMC) provides an interface between the APB2 peripheral bus and MultiMediaCards (MMCs), SD memory cards and SDIO cards.

The MultiMediaCard system specifications are available through the MultiMediaCard Association website, published by the MMCA technical committee.

SD memory card and SD I/O card system specifications are available through the SD card Association website.

The SDMMC features include the following:

- Full compliance with *MultiMediaCard System Specification Version 4.2*. Card support for three different databus modes: 1-bit (default), 4-bit and 8-bit
- Full compatibility with previous versions of MultiMediaCards (forward compatibility)
- Full compliance with *SD Memory Card Specifications Version 2.0*
- Full compliance with *SD I/O Card Specification Version 2.0:* card support for two different databus modes: 1-bit (default) and 4-bit
- Data transfer up to 50 MHz for the 8 bit mode
- Data and command output enable signals to control external bidirectional drivers.

Note: 1 The SDMMC does not have an SPI-compatible communication mode.

2 The SD memory card protocol is a superset of the MultiMediaCard protocol as defined in the MultiMediaCard system specification V2.11. Several commands required for SD memory devices are not supported by either SD I/O-only cards or the I/O portion of combo cards. Some of these commands have no use in SD I/O devices, such as erase commands, and thus are not supported in the SDIO protocol. In addition, several commands are different between SD memory cards and SD I/O cards and thus are not supported in the SDIO protocol. For details refer to SD I/O card Specification Version 1.0.

The MultiMediaCard/SD bus connects cards to the controller.

The current version of the SDMMC supports only one SD/SDIO/MMC4.2 card at any one time and a stack of MMC4.1 or previous.

45.2 SDMMC bus topology

Communication over the bus is based on command and data transfers.

The basic transaction on the MultiMediaCard/SD/SD I/O bus is the command/response transaction. These types of bus transaction transfer their information directly within the command or response structure. In addition, some operations have a data token.

Data transfers to/from SD/SDIO memory cards are done in data blocks. Data transfers to/from MMC are done data blocks or streams.

Figure 499. “No response” and “no data” operations

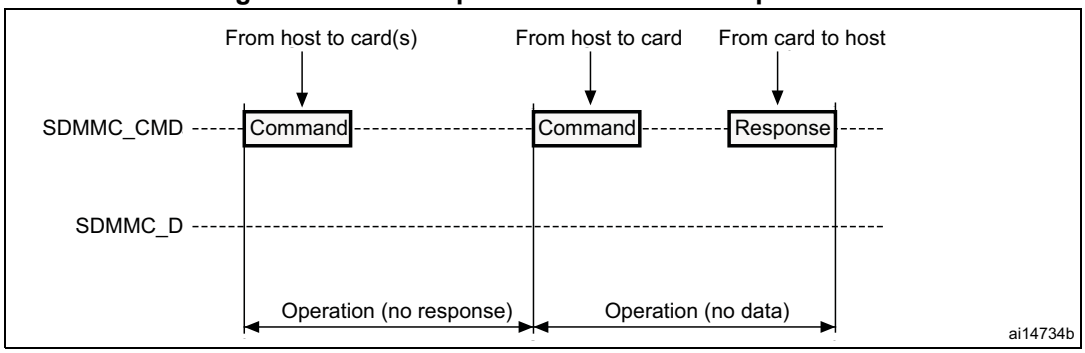

Figure 500. (Multiple) block read operation

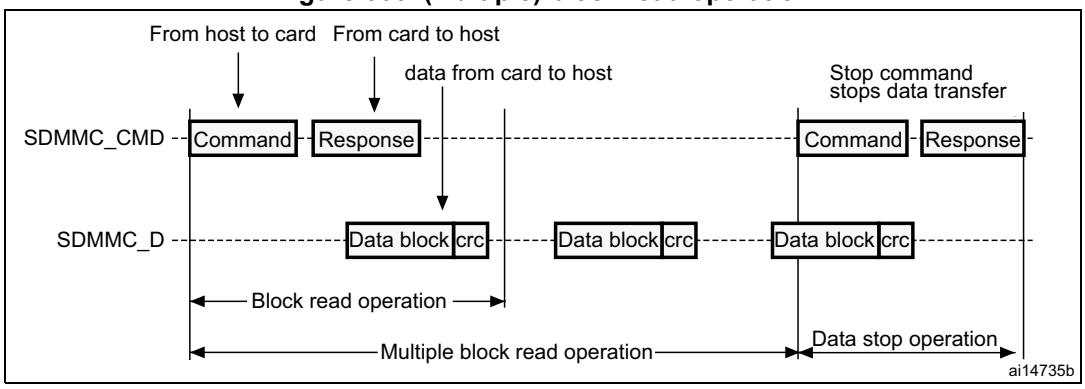

Figure 501. (Multiple) block write operation

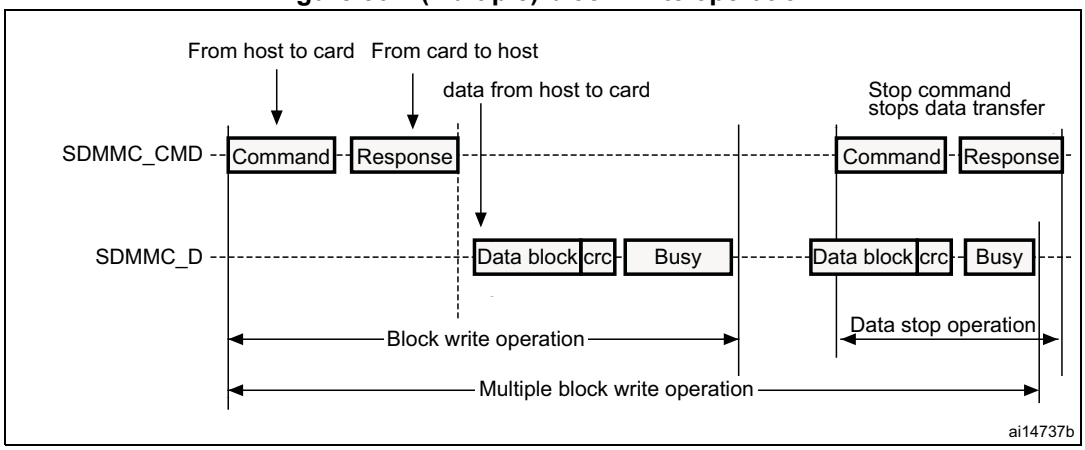

Note: The SDMMC will not send any data as long as the Busy signal is asserted (SDMMC_D0 pulled low).

Figure 502. Sequential read operation

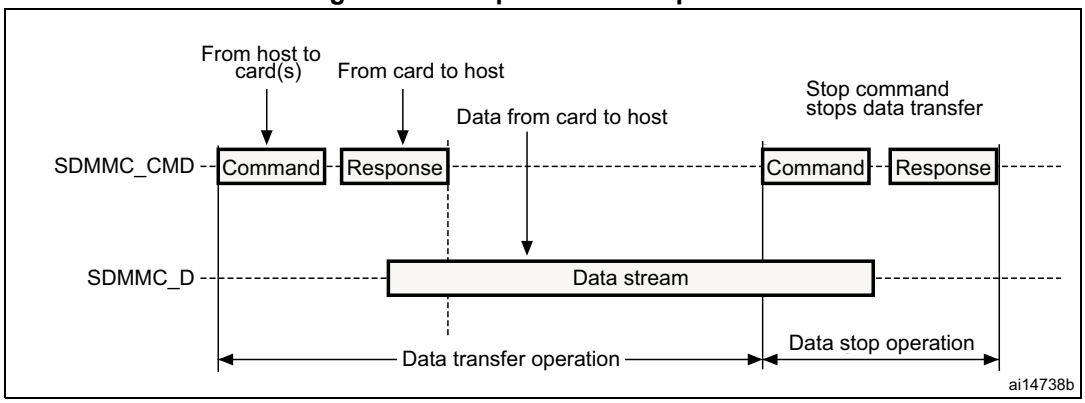

Figure 503. Sequential write operation

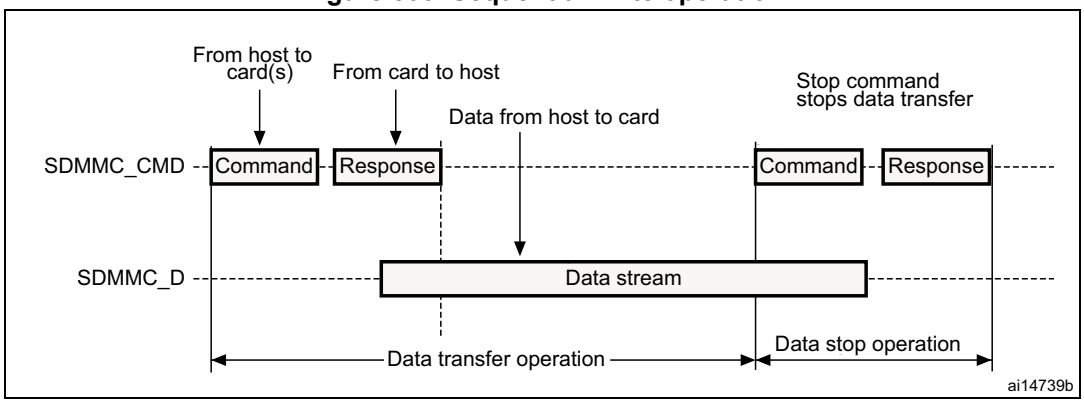

45.3 SDMMC functional description

The SDMMC consists of two parts:

- The SDMMC adapter block provides all functions specific to the MMC/SD/SD I/O card such as the clock generation unit, command and data transfer.
- The APB2 interface accesses the SDMMC adapter registers, and generates interrupt and DMA request signals.

Figure 504. SDMMC block diagram

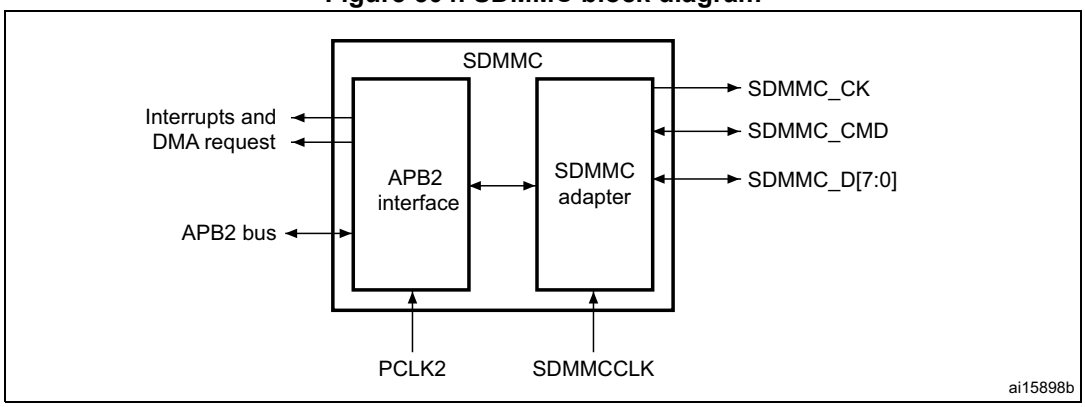

By default SDMMC_D0 is used for data transfer. After initialization, the host can change the databus width.

If a MultiMediaCard is connected to the bus, SDMMC_D0, SDMMC_D[3:0] or SDMMC_D[7:0] can be used for data transfer. MMC V3.31 or previous, supports only 1 bit of data so only SDMMC_D0 can be used.

If an SD or SD I/O card is connected to the bus, data transfer can be configured by the host to use SDMMC_D0 or SDMMC_D[3:0]. All data lines are operating in push-pull mode.

SDMMC_CMD has two operational modes:

- Open-drain for initialization (only for MMCV3.31 or previous)
- Push-pull for command transfer (SD/SD I/O card MMC4.2 use push-pull drivers also for initialization)

SDMMC_CK is the clock to the card: one bit is transferred on both command and data lines with each clock cycle.

The SDMMC uses two clock signals:

- SDMMC adapter clock SDMMCCLK = 50 MHz)
- APB2 bus clock (PCLK2)

PCLK2 and SDMMC_CK clock frequencies must respect the following condition:

$$\text{Frequenc}(\text{PCLK2}) > ((3\text{xWidth})/32) \times \text{Frequency}(\text{SDMMC_CK})$$

The signals shown in *Table 279* are used on the MultiMediaCard/SD/SD I/O card bus.

Table 279. SDMMC I/O definitions

Pin	Direction	Description
SDMMC_CK	Output	MultiMediaCard/SD/SDIO card clock. This pin is the clock from host to card.
SDMMC_CMD	Bidirectional	MultiMediaCard/SD/SDIO card command. This pin is the bidirectional command/response signal.
SDMMC_D[7:0]	Bidirectional	MultiMediaCard/SD/SDIO card data. These pins are the bidirectional databus.

45.3.1 SDMMC adapter

Figure 505 shows a simplified block diagram of an SDMMC adapter.

Figure 505. SDMMC adapter

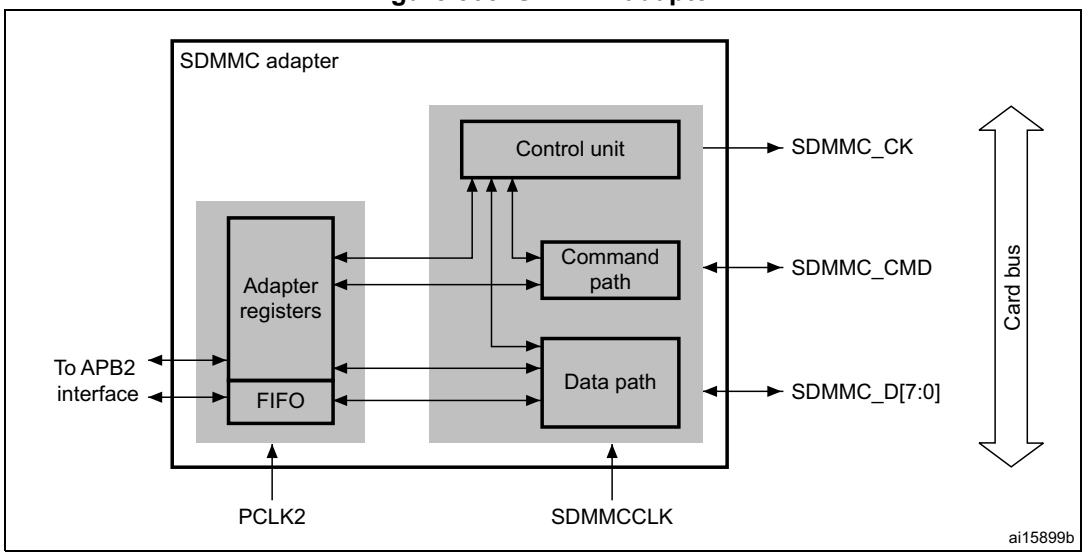

The SDMMC adapter is a multimedia/secure digital memory card bus master that provides an interface to a multimedia card stack or to a secure digital memory card. It consists of five subunits:

- Adapter register block
- Control unit
- Command path
- Data path
- Data FIFO

*Note: The adapter registers and FIFO use the APB2 bus clock domain (*PCLK2*). The control unit, command path and data path use the SDMMC adapter clock domain (SDMMCCLK).*

Adapter register block

The adapter register block contains all system registers. This block also generates the signals that clear the static flags in the multimedia card. The clear signals are generated when 1 is written into the corresponding bit location in the SDMMC Clear register.

Control unit

The control unit contains the power management functions and the clock divider for the memory card clock.

There are three power phases:

- power-off
- power-up
- power-on

Figure 506. Control unit

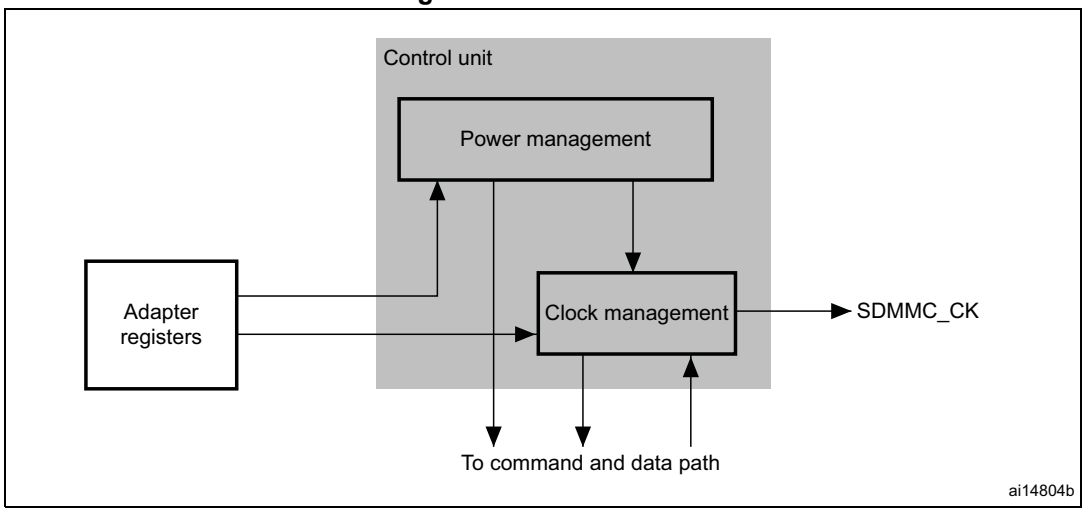

The control unit is illustrated in *Figure 506*. It consists of a power management subunit and a clock management subunit.

The power management subunit disables the card bus output signals during the power-off and power-up phases.

The clock management subunit generates and controls the SDMMC_CK signal. The SDMMC_CK output can use either the clock divide or the clock bypass mode. The clock output is inactive:

- after reset
- during the power-off or power-up phases
- if the power saving mode is enabled and the card bus is in the Idle state (eight clock periods after both the command and data path subunits enter the Idle phase)

The clock management subunit controls SDMMC_CK dephasing. When not in bypass mode the SDMMC command and data output are generated on the SDMMCCLK falling edge succeeding the rising edge of SDMMC_CK. (SDMMC_CK rising edge occurs on SDMMCCLK rising edge) when SDMMC_CLKCR[13] bit is reset (NEGEDGE = 0). When SDMMC_CLKCR[13] bit is set (NEGEDGE = 1) SDMMC command and data changed on the SDMMC_CK falling edge.

When SDMMC_CLKCR[10] is set (BYPASS = 1), SDMMC_CK rising edge occurs on SDMMCCLK rising edge. The data and the command change on SDMMCCLK falling edge whatever NEGEDGE value.

The data and command responses are latched using SDMMC_CK rising edge.

Figure 507. SDMMC_CK clock dephasing (BYPASS = 0)

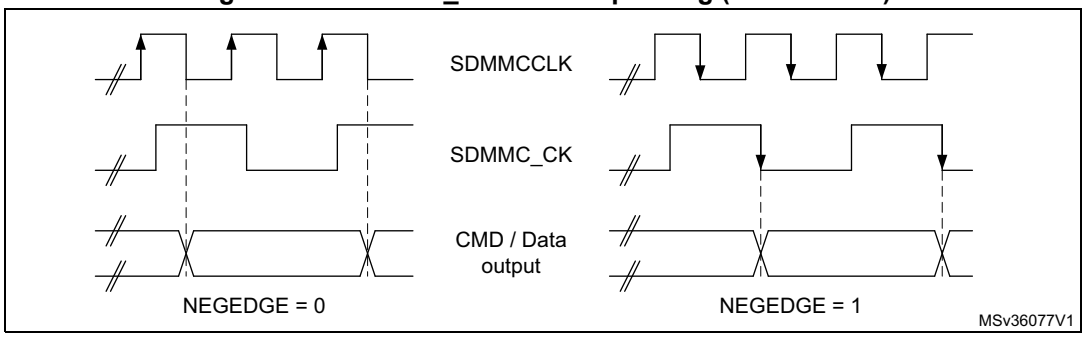

Command path

The command path unit sends commands to and receives responses from the cards.

Figure 508. SDMMC adapter command path

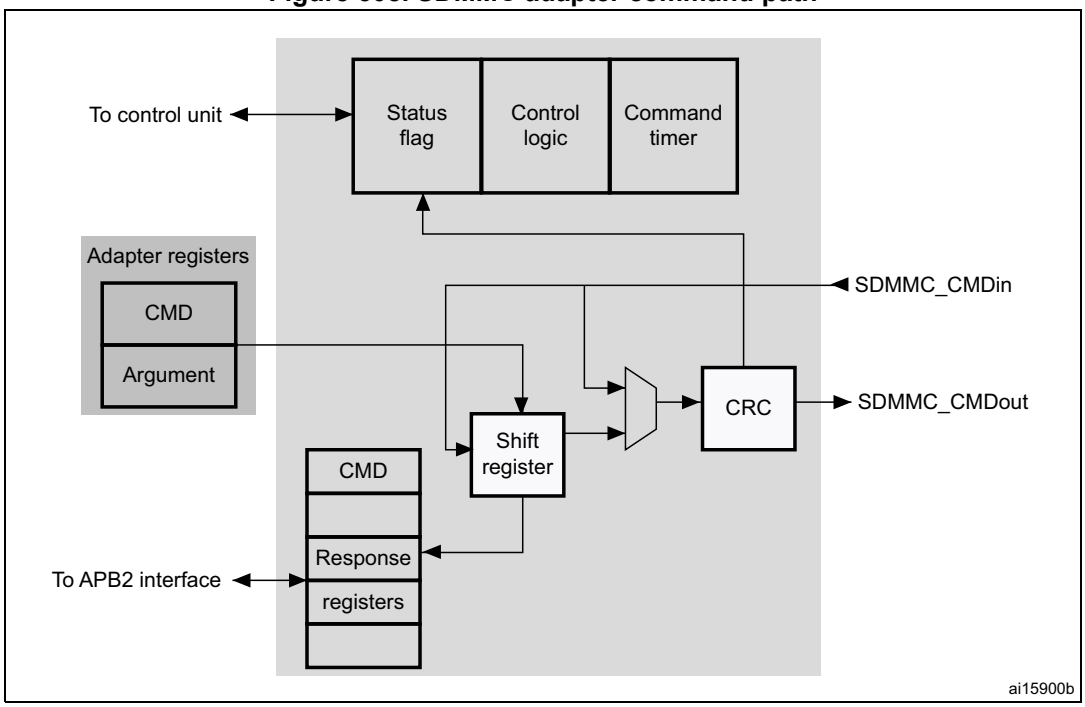

- Command path state machine (CPSM)
  - When the command register is written to and the enable bit is set, command transfer starts. When the command has been sent, the command path state machine (CPSM) sets the status flags and enters the Idle state if a response is not required. If a response is required, it waits for the response (see *Figure 509 on page 1575*). When the response is received, the received CRC code and the internally generated code are compared, and the appropriate status flags are set.

Figure 509. Command path state machine (SDMMC)

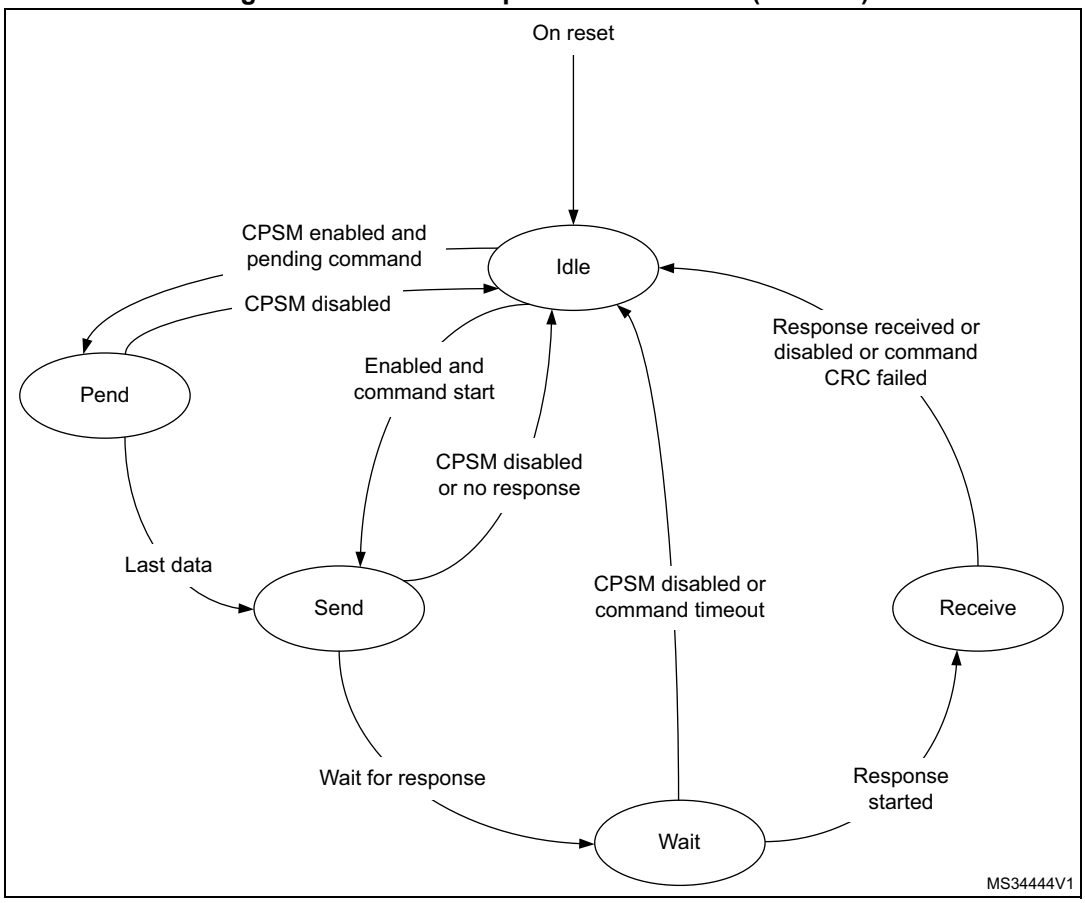

When the Wait state is entered, the command timer starts running. If the timeout is reached before the CPSM moves to the Receive state, the timeout flag is set and the Idle state is entered.

Note: The command timeout has a fixed value of 64 SDMMC_CK clock periods.

If the interrupt bit is set in the command register, the timer is disabled and the CPSM waits for an interrupt request from one of the cards. If a pending bit is set in the command register, the CPSM enters the Pend state, and waits for a CmdPend signal from the data path subunit. When CmdPend is detected, the CPSM moves to the Send state. This enables the data counter to trigger the stop command transmission.

Note: The CPSM remains in the Idle state for at least eight SDMMC_CK periods to meet the N_{CC} and N_{RC} timing constraints. N_{CC} is the minimum delay between two host commands, and N_{RC} is the minimum delay between the host command and the card response.

Figure 510. SDMMC command transfer

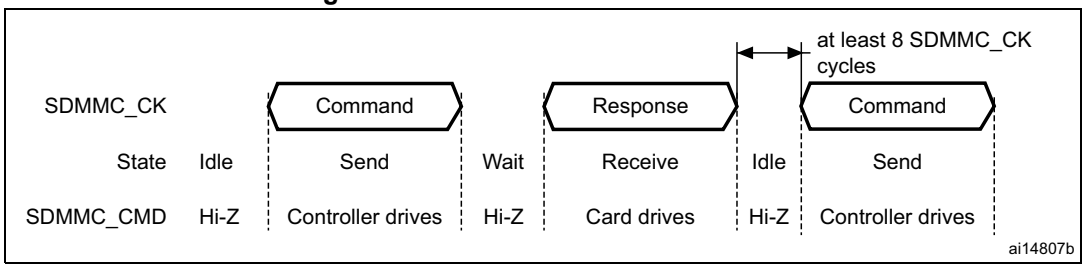

- Command format
  - Command: a command is a token that starts an operation. Command are sent from the host either to a single card (addressed command) or to all connected cards (broadcast command are available for MMC V3.31 or previous). Commands are transferred serially on the CMD line. All commands have a fixed length of 48 bits. The general format for a command token for MultiMediaCards, SD-Memory cards and SDIO-Cards is shown in *Table 280*.

    The command path operates in a half-duplex mode, so that commands and responses can either be sent or received. If the CPSM is not in the Send state, the SDMMC_CMD output is in the Hi-Z state, as shown in *Figure 510 on page 1576*. Data on SDMMC_CMD are synchronous with the rising edge of SDMMC_CK. *Table 280* shows the command format.

Table 280. Command format

Bit position	Width	Value	Description
47	1	0	Start bit
46	1	1	Transmission bit
[45:40]	6	-	Command index
[39:8]	32	-	Argument
[7:1]	7	-	CRC7
0	1	1	End bit

  - Response: a response is a token that is sent from an addressed card (or synchronously from all connected cards for MMC V3.31 or previous), to the host as an answer to a previously received command. Responses are transferred serially on the CMD line.

The SDMMC supports two response types. Both use CRC error checking:

- 48 bit short response
- 136 bit long response

Note: If the response does not contain a CRC (CMD1 response), the device driver must ignore the CRC failed status.

Table 281. Short response format

Bit position	Width	Value	Description
47	1	0	Start bit
46	1	0	Transmission bit
[45:40]	6	-	Command index
[39:8]	32	-	Argument
[7:1]	7	-	CRC7(or 1111111)
0	1	1	End bit

Table 282. Long response format

Bit position	Width	Value	Description
135	1	0	Start bit
134	1	0	Transmission bit
[133:128]	6	111111	Reserved
[127:1]	127	-	CID or CSD (including internal CRC7)
0	1	1	End bit

The command register contains the command index (six bits sent to a card) and the command type. These determine whether the command requires a response, and whether the response is 48 or 136 bits long (see *Section 45.8.4 on page 1612*). The command path implements the status flags shown in *Table 283*:

Table 283. Command path status flags

Flag	Description
CMDREND	Set if response CRC is OK.
CCRCFAIL	Set if response CRC fails.
CMDSENT	Set when command (that does not require response) is sent
CTIMEOUT	Response timeout.
CMDACT	Command transfer in progress.

The CRC generator calculates the CRC checksum for all bits before the CRC code. This includes the start bit, transmitter bit, command index, and command argument (or card status). The CRC checksum is calculated for the first 120 bits of CID or CSD for the long response format. Note that the start bit, transmitter bit and the six reserved bits are not used in the CRC calculation.

The CRC checksum is a 7-bit value:

$$CRC[6:0] = \text{Remainder}\ [(M(x) * x^7) / G(x)]$$

$$G(x) = x^7 + x^3 + 1$$

$$M(x) = (\text{start bit}) * x^{39} + ... + (\text{last bit before CRC}) * x^0, \text{ or}$$

$$M(x) = (\text{start bit}) * x^{119} + ... + (\text{last bit before CRC}) * x^0$$

Data path

The data path subunit transfers data to and from cards. *Figure 511* shows a block diagram of the data path.

Figure 511. Data path

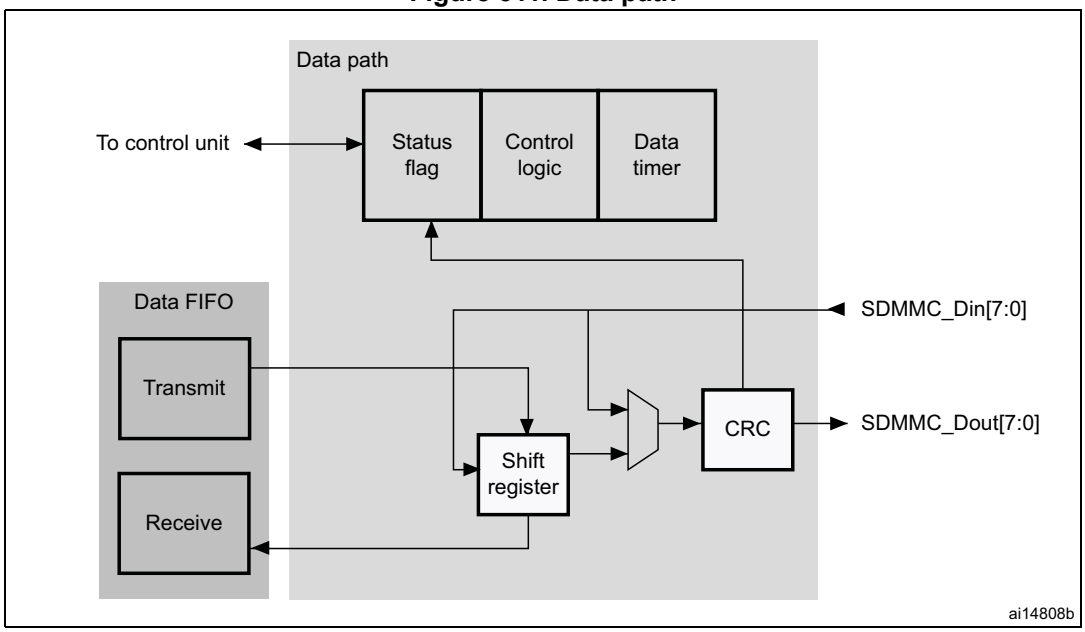

The card databus width can be programmed using the clock control register. If the 4-bit wide bus mode is enabled, data is transferred at four bits per clock cycle over all four data signals (SDMMC_D[3:0]). If the 8-bit wide bus mode is enabled, data is transferred at eight bits per clock cycle over all eight data signals (SDMMC_D[7:0]). If the wide bus mode is not enabled, only one bit per clock cycle is transferred over SDMMC_D0.

Depending on the transfer direction (send or receive), the data path state machine (DPSM) moves to the Wait_S or Wait_R state when it is enabled:

- Send: the DPSM moves to the Wait_S state. If there is data in the transmit FIFO, the DPSM moves to the Send state, and the data path subunit starts sending data to a card.
- Receive: the DPSM moves to the Wait_R state and waits for a start bit. When it receives a start bit, the DPSM moves to the Receive state, and the data path subunit starts receiving data from a card.

Data path state machine (DPSM)

The DPSM operates at SDMMC_CK frequency. Data on the card bus signals is synchronous to the rising edge of SDMMC_CK. The DPSM has six states, as shown in *Figure 512: Data path state machine (DPSM)*.

Figure 512. Data path state machine (DPSM)

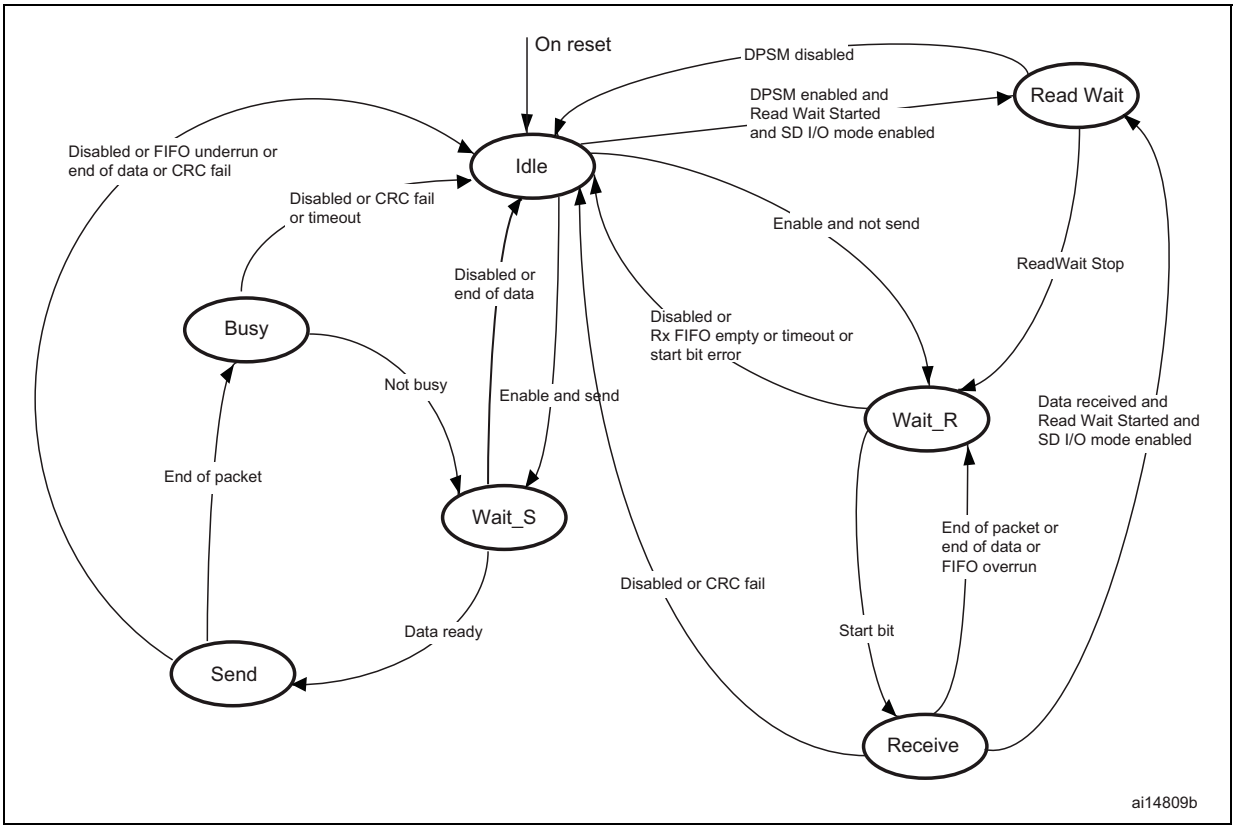

- Idle: the data path is inactive, and the SDMMC_D[7:0] outputs are in Hi-Z. When the data control register is written and the enable bit is set, the DPSM loads the data counter with a new value and, depending on the data direction bit, moves to either the Wait_S or the Wait_R state.
- Wait_R: if the data counter equals zero, the DPSM moves to the Idle state when the receive FIFO is empty. If the data counter is not zero, the DPSM waits for a start bit on SDMMC_D. The DPSM moves to the Receive state if it receives a start bit before a timeout, and loads the data block counter. If it reaches a timeout before it detects a start bit, it moves to the Idle state and sets the timeout status flag.
- Receive: serial data received from a card is packed in bytes and written to the data FIFO. Depending on the transfer mode bit in the data control register, the data transfer mode can be either block or stream:
  - In block mode, when the data block counter reaches zero, the DPSM waits until it receives the CRC code. If the received code matches the internally generated CRC code, the DPSM moves to the Wait_R state. If not, the CRC fail status flag is set and the DPSM moves to the Idle state.
  - In stream mode, the DPSM receives data while the data counter is not zero. When the counter is zero, the remaining data in the shift register is written to the data FIFO, and the DPSM moves to the Wait_R state.

  If a FIFO overrun error occurs, the DPSM sets the FIFO error flag and moves to the Idle state:
- Wait_S: the DPSM moves to the Idle state if the data counter is zero. If not, it waits until the data FIFO empty flag is deasserted, and moves to the Send state.

Note: The DPSM remains in the Wait_S state for at least two clock periods to meet the N_{WR} timing requirements, where N_{WR} is the number of clock cycles between the reception of the card response and the start of the data transfer from the host.

- Send: the DPSM starts sending data to a card. Depending on the transfer mode bit in the data control register, the data transfer mode can be either block or stream:
  - In block mode, when the data block counter reaches zero, the DPSM sends an internally generated CRC code and end bit, and moves to the Busy state.
  - In stream mode, the DPSM sends data to a card while the enable bit is high and the data counter is not zero. It then moves to the Idle state.

  If a FIFO underrun error occurs, the DPSM sets the FIFO error flag and moves to the Idle state.
- Busy: the DPSM waits for the CRC status flag:
  - If it does not receive a positive CRC status, it moves to the Idle state and sets the CRC fail status flag.
  - If it receives a positive CRC status, it moves to the Wait_S state if SDMMC_D0 is not low (the card is not busy).

  If a timeout occurs while the DPSM is in the Busy state, it sets the data timeout flag and moves to the Idle state.

  The data timer is enabled when the DPSM is in the Wait_R or Busy state, and generates the data timeout error:
  - When transmitting data, the timeout occurs if the DPSM stays in the Busy state for longer than the programmed timeout period
  - When receiving data, the timeout occurs if the end of the data is not true, and if the DPSM stays in the Wait_R state for longer than the programmed timeout period.
- **Data:** data can be transferred from the card to the host or vice versa. Data is transferred via the data lines. They are stored in a FIFO of 32 words, each word is 32 bits wide.

Table 284. Data token format

Description	Start bit	Data	CRC16	End bit
Block Data	0	-	yes	1
Stream Data	0	-	no	1

DPSM Flags

The status of the data path subunit transfer is reported by several status flags

Table 285. DPSM flags

Flag	Description
DBCKEND	Set to high when data block send/receive CRC check is passed. In SDIO multibyte transfer mode this flag is set at the end of the transfer (a multibyte transfer is considered as a single block transfer by the host).
DATAEND	Set to high when SDMMC_DCOUNT register decrements and reaches 0. DATAEND indicates the end of a transfer on SDMMC data line.
DTIMEOUT	Set to high when data timeout period is reached. When data timer reaches zero while DPSM is in Wait_R or Busy state, timeout is set. DTIMEOUT can be set after DATAEND if DPSM remains in busy state for longer than the programmed period.
DCRCFAIL	Set to high when data block send/receive CRC check fails.

Data FIFO

The data FIFO (first-in-first-out) subunit is a data buffer with a transmit and receive unit.

The FIFO contains a 32-bit wide, 32-word deep data buffer, and transmit and receive logic. Because the data FIFO operates in the APB2 clock domain (PCLK2), all signals from the subunits in the SDMMC clock domain (SDMMCCLK) are resynchronized.

Depending on the TXACT and RXACT flags, the FIFO can be disabled, transmit enabled, or receive enabled. TXACT and RXACT are driven by the data path subunit and are mutually exclusive:

- The transmit FIFO refers to the transmit logic and data buffer when TXACT is asserted
- The receive FIFO refers to the receive logic and data buffer when RXACT is asserted

- Transmit FIFO:

  Data can be written to the transmit FIFO through the APB2 interface when the SDMMC is enabled for transmission.

  The transmit FIFO is accessible via 32 sequential addresses. The transmit FIFO contains a data output register that holds the data word pointed to by the read pointer. When the data path subunit has loaded its shift register, it increments the read pointer and drives new data out.

  If the transmit FIFO is disabled, all status flags are deasserted. The data path subunit asserts TXACT when it transmits data.

Table 286. Transmit FIFO status flags

Flag	Description
TXFIFOF	Set to high when all 32 transmit FIFO words contain valid data.
TXFIFOE	Set to high when the transmit FIFO does not contain valid data.
TXFIFOHE	Set to high when 8 or more transmit FIFO words are empty. This flag can be used as a DMA request.
TXDAVL	Set to high when the transmit FIFO contains valid data. This flag is the inverse of the TXFIFOE flag.
TXUNDERR	Set to high when an underrun error occurs. This flag is cleared by writing to the SDMMC Clear register. *Note:* In case of TXUNDERR, and DMA is used to fill SDMMC FIFO, *user software should disable DMA stream, and then write DMAEN bit in SDMMC_DCTRL with '0' (to disable DMA request generation).*

- Receive FIFO

  When the data path subunit receives a word of data, it drives the data on the write databus. The write pointer is incremented after the write operation completes. On the read side, the contents of the FIFO word pointed to by the current value of the read pointer is driven onto the read databus. If the receive FIFO is disabled, all status flags are deasserted, and the read and write pointers are reset. The data path subunit asserts RXACT when it receives data. *Table 287* lists the receive FIFO status flags. The receive FIFO is accessible via 32 sequential addresses.

Table 287. Receive FIFO status flags

Flag	Description
RXFIFOF	Set to high when all 32 receive FIFO words contain valid data
RXFIFOE	Set to high when the receive FIFO does not contain valid data.
RXFIFOHF	Set to high when 8 or more receive FIFO words contain valid data. This flag can be used as a DMA request.
RXDAVL	Set to high when the receive FIFO is not empty. This flag is the inverse of the RXFIFOE flag.
RXOVERR	Set to high when an overrun error occurs. This flag is cleared by writing to the SDMMC Clear register. *Note: In case of RXOVERR, and DMA is used to read SDMMC FIFO, user software should disable DMA stream, and then write DMAEN bit in SDMMC_DCTRL with '0' (to disable DMA request generation).*

45.3.2 SDMMC APB2 interface

The APB2 interface generates the interrupt and DMA requests, and accesses the SDMMC adapter registers and the data FIFO. It consists of a data path, register decoder, and interrupt/DMA logic.

SDMMC interrupts

The interrupt logic generates an interrupt request signal that is asserted when at least one of the selected status flags is high. A mask register is provided to allow selection of the conditions that will generate an interrupt. A status flag generates the interrupt request if a corresponding mask flag is set.

SDMMC/DMA interface

SDMMC APB interface controls all subunit to perform transfers between the host and card

Example of read procedure using DMA

Send CMD17 (READ_BLOCK) as follows:

a) Program the SDMMC data length register (SDMMC data timer register should be already programmed before the card identification process)

b) Program DMA channel (refer to *DMA configuration for SDMMC controller*)

c) Program the SDMMC data control register: DTEN with ‘1’ (SDMMC card host enabled to send data); DTDIR with ‘1’ (from card to controller); DTMODE with ‘0’ (block data transfer); DMAEN with ‘1’ (DMA enabled); DBLOCKSIZE with 0x9 (512 bytes). Other fields are don’t care.

d) Program the SDMMC argument register with the address location of the card from where data is to be transferred

e) Program the SDMMC command register: CmdIndex with 17(READ_BLOCK); WaitResp with ‘1’ (SDMMC card host waits for a response); CPSMEN with ‘1’ (SDMMC card host enabled to send a command). Other fields are at their reset value.

f) Wait for SDMMC_STA[6] = CMDREND interrupt, (CMDREND is set if there is no error on command path).

g) Wait for SDMMC_STA[10] = DBCKEND, (DBCKEND is set in case of no errors until the CRC check is passed)

h) Wait until the FIFO is empty, when FIFO is empty the SDMMC_STA[5] = RXOVERR value has to be check to guarantee that read succeeded

Note: When FIFO overrun error occurs with last 1-4 bytes, it may happens that RXOVERR flag is set 2 APB clock cycles after DATAEND flag is set. To guarantee success of read operation RXOVERR must be cheked after FIFO is empty.

Example of write procedure using DMA

Send CMD24 (WRITE_BLOCK) as follows:

a) Program the SDMMC data length register (SDMMC data timer register should be already programmed before the card identification process)

b) Program DMA channel (refer to *DMA configuration for SDMMC controller*)

c) Program the SDMMC argument register with the address location of the card from where data is to be transferred

d) Program the SDMMC command register: CmdIndex with 24(WRITE_BLOCK); WaitResp with ‘1’ (SDMMC card host waits for a response); CPSMEN with ‘1’ (SDMMC card host enabled to send a command). Other fields are at their reset value.

e) Wait for SDMMC_STA[6] = CMDREND interrupt, then Program the SDMMC data control register: DTEN with ‘1’ (SDMMC card host enabled to send data); DTDIR with ‘0’ (from controller to card); DTMODE with ‘0’ (block data transfer); DMAEN with ‘1’ (DMA enabled); DBLOCKSIZE with 0x9 (512 bytes). Other fields are don’t care.

f) Wait for SDMMC_STA[10] = DBCKEND, (DBCKEND is set in case of no errors)

DMA configuration for SDMMC controller

a) Enable DMA2 controller and clear any pending interrupts

b) Program the DMA2_Channel4 (or DMA2_Channel5) source address register with the memory location base address and DMA2_Channel4 (or DMA2_Channel5) destination address register with the SDMMC_FIFO register address

c) Program DMA2_Channel4 (or DMA2_Channel5) control register (memory increment, not peripheral increment, peripheral and source width is word size)

d) Enable DMA2_Channel4 (or DMA2_Channel5)

45.4 Card functional description

45.4.1 Card identification mode

While in card identification mode the host resets all cards, validates the operation voltage range, identifies cards and sets a relative card address (RCA) for each card on the bus. All data communications in the card identification mode use the command line (CMD) only.

45.4.2 Card reset

The GO_IDLE_STATE command (CMD0) is the software reset command and it puts the MultiMediaCard and SD memory in the Idle state. The IO_RW_DIRECT command (CMD52) resets the SD I/O card. After power-up or CMD0, all cards output bus drivers are in the high-impedance state and the cards are initialized with a default relative card address (RCA=0x0001) and with a default driver stage register setting (lowest speed, highest driving current capability).

45.4.3 Operating voltage range validation

All cards can communicate with the SDMMC card host using any operating voltage within the specification range. The supported minimum and maximum V_{DD} values are defined in the operation conditions register (OCR) on the card.

Cards that store the card identification number (CID) and card specific data (CSD) in the payload memory are able to communicate this information only under data-transfer V_{DD} conditions. When the SDMMC card host module and the card have incompatible V_{DD} ranges, the card is not able to complete the identification cycle and cannot send CSD data. For this purpose, the special commands, SEND_OP_COND (CMD1), SD_APP_OP_COND (ACMD41 for SD Memory), and IO_SEND_OP_COND (CMD5 for SD I/O), are designed to provide a mechanism to identify and reject cards that do not match the V_{DD} range desired by the SDMMC card host. The SDMMC card host sends the required V_{DD} voltage window as the operand of these commands. Cards that cannot perform data transfer in the specified range disconnect from the bus and go to the inactive state.

By using these commands without including the voltage range as the operand, the SDMMC card host can query each card and determine the common voltage range before placing out-of-range cards in the inactive state. This query is used when the SDMMC card host is able to select a common voltage range or when the user requires notification that cards are not usable.

45.4.4 Card identification process

The card identification process differs for MultiMediaCards and SD cards. For MultiMediaCard cards, the identification process starts at clock rate F_{od}. The SDMMC_CMD line output drivers are open-drain and allow parallel card operation during this process. The registration process is accomplished as follows:

1. The bus is activated.
2. The SDMMC card host broadcasts SEND_OP_COND (CMD1) to receive operation conditions.
3. The response is the wired AND operation of the operation condition registers from all cards.
4. Incompatible cards are placed in the inactive state.
5. The SDMMC card host broadcasts ALL_SEND_CID (CMD2) to all active cards.
6. The active cards simultaneously send their CID numbers serially. Cards with outgoing CID bits that do not match the bits on the command line stop transmitting and must wait for the next identification cycle. One card successfully transmits a full CID to the SDMMC card host and enters the Identification state.
7. The SDMMC card host issues SET_RELATIVE_ADDR (CMD3) to that card. This new address is called the relative card address (RCA); it is shorter than the CID and addresses the card. The assigned card changes to the Standby state, it does not react to further identification cycles, and its output switches from open-drain to push-pull.
8. The SDMMC card host repeats steps 5 through 7 until it receives a timeout condition.

For the SD card, the identification process starts at clock rate F_{od}, and the SDMMC_CMD line output drives are push-pull drivers instead of open-drain. The registration process is accomplished as follows:

1. The bus is activated.
2. The SDMMC card host broadcasts SD_APP_OP_COND (ACMD41).
3. The cards respond with the contents of their operation condition registers.
4. The incompatible cards are placed in the inactive state.
5. The SDMMC card host broadcasts ALL_SEND_CID (CMD2) to all active cards.
6. The cards send back their unique card identification numbers (CIDs) and enter the Identification state.
7. The SDMMC card host issues SET_RELATIVE_ADDR (CMD3) to an active card with an address. This new address is called the relative card address (RCA); it is shorter than the CID and addresses the card. The assigned card changes to the Standby state. The SDMMC card host can reissue this command to change the RCA. The RCA of the card is the last assigned value.
8. The SDMMC card host repeats steps 5 through 7 with all active cards.

For the SD I/O card, the registration process is accomplished as follows:

1. The bus is activated.
2. The SDMMC card host sends IO_SEND_OP_COND (CMD5).
3. The cards respond with the contents of their operation condition registers.
4. The incompatible cards are set to the inactive state.
5. The SDMMC card host issues SET_RELATIVE_ADDR (CMD3) to an active card with an address. This new address is called the relative card address (RCA); it is shorter than the CID and addresses the card. The assigned card changes to the Standby state. The SDMMC card host can reissue this command to change the RCA. The RCA of the card is the last assigned value.

45.4.5 Block write

During block write (CMD24 - 27) one or more blocks of data are transferred from the host to the card with a CRC appended to the end of each block by the host. A card supporting block write is always able to accept a block of data defined by WRITE_BL_LEN. If the CRC fails, the card indicates the failure on the SDMMC_D line and the transferred data are discarded and not written, and all further transmitted blocks (in multiple block write mode) are ignored.

If the host uses partial blocks whose accumulated length is not block aligned and, block misalignment is not allowed (CSD parameter WRITE_BLK_MISALIGN is not set), the card will detect the block misalignment error before the beginning of the first misaligned block. (ADDRESS_ERROR error bit is set in the status register). The write operation will also be aborted if the host tries to write over a write-protected area. In this case, however, the card will set the WP_VIOLATION bit.

Programming of the CID and CSD registers does not require a previous block length setting. The transferred data is also CRC protected. If a part of the CSD or CID register is stored in ROM, then this unchangeable part must match the corresponding part of the receive buffer. If this match fails, then the card reports an error and does not change any register contents. Some cards may require long and unpredictable times to write a block of data. After receiving a block of data and completing the CRC check, the card begins writing and holds the SDMMC_D line low if its write buffer is full and unable to accept new data from a new WRITE_BLOCK command. The host may poll the status of the card with a SEND_STATUS command (CMD13) at any time, and the card will respond with its status. The READY_FOR_DATA status bit indicates whether the card can accept new data or whether the write process is still in progress. The host may deselect the card by issuing CMD7 (to

select a different card), which will place the card in the Disconnect state and release the SDMMC_D line(s) without interrupting the write operation. When reselecting the card, it will reactivate busy indication by pulling SDMMC_D to low if programming is still in progress and the write buffer is unavailable.

45.4.6 Block read

In Block read mode the basic unit of data transfer is a block whose maximum size is defined in the CSD (READ_BL_LEN). If READ_BL_PARTIAL is set, smaller blocks whose start and end addresses are entirely contained within one physical block (as defined by READ_BL_LEN) may also be transmitted. A CRC is appended to the end of each block, ensuring data transfer integrity. CMD17 (READ_SINGLE_BLOCK) initiates a block read and after completing the transfer, the card returns to the Transfer state.

CMD18 (READ_MULTIPLE_BLOCK) starts a transfer of several consecutive blocks.

The host can abort reading at any time, within a multiple block operation, regardless of its type. Transaction abort is done by sending the stop transmission command.

If the card detects an error (for example, out of range, address misalignment or internal error) during a multiple block read operation (both types) it stops the data transmission and remains in the data state. The host must than abort the operation by sending the stop transmission command. The read error is reported in the response to the stop transmission command.

If the host sends a stop transmission command after the card transmits the last block of a multiple block operation with a predefined number of blocks, it is responded to as an illegal command, since the card is no longer in the data state. If the host uses partial blocks whose accumulated length is not block-aligned and block misalignment is not allowed, the card detects a block misalignment error condition at the beginning of the first misaligned block (ADDRESS_ERROR error bit is set in the status register).

45.4.7 Stream access, stream write and stream read (MultiMediaCard only)

In stream mode, data is transferred in bytes and no CRC is appended at the end of each block.

Stream write (MultiMediaCard only)

WRITE_DAT_UNTIL_STOP (CMD20) starts the data transfer from the SDMMC card host to the card, beginning at the specified address and continuing until the SDMMC card host issues a stop command. When partial blocks are allowed (CSD parameter WRITE_BL_PARTIAL is set), the data stream can start and stop at any address within the card address space, otherwise it can only start and stop at block boundaries. Because the amount of data to be transferred is not determined in advance, a CRC cannot be used. When the end of the memory range is reached while sending data and no stop command is sent by the SDMMC card host, any additional transferred data are discarded.

The maximum clock frequency for a stream write operation is given by the following equation fields of the card-specific data register:

$$\text{Maximumspeed} = \text{MIN}(\text{TRANSPEED}, \frac{(8 \times 2^{\text{writebllen}})(-\text{NSAC})}{\text{TAAC} \times \text{R2WFACTOR}})$$

- Maximumspeed = maximum write frequency
- TRANSPEED = maximum data transfer rate
- writebllen = maximum write data block length
- NSAC = data read access time 2 in CLK cycles
- TAAC = data read access time 1
- R2WFACTOR = write speed factor

If the host attempts to use a higher frequency, the card may not be able to process the data and stop programming, set the OVERRUN error bit in the status register, and while ignoring all further data transfer, wait (in the receive data state) for a stop command. The write operation is also aborted if the host tries to write over a write-protected area. In this case, however, the card sets the WP_VIOLATION bit.

Stream read (MultiMediaCard only)

READ_DAT_UNTIL_STOP (CMD11) controls a stream-oriented data transfer.

This command instructs the card to send its data, starting at a specified address, until the SDMMC card host sends STOP_TRANSMISSION (CMD12). The stop command has an execution delay due to the serial command transmission and the data transfer stops after the end bit of the stop command. When the end of the memory range is reached while sending data and no stop command is sent by the SDMMC card host, any subsequent data sent are considered undefined.

The maximum clock frequency for a stream read operation is given by the following equation and uses fields of the card specific data register.

$$\text{Maximumspeed} = \text{MIN}(\text{TRANSPEED}, \frac{(8 \times 2^{\text{readbllen}})(-\text{NSAC})}{\text{TAAC} \times \text{R2WFACTOR}})$$

- Maximumspeed = maximum read frequency
- TRANSPEED = maximum data transfer rate
- readbllen = maximum read data block length
- writebllen = maximum write data block length
- NSAC = data read access time 2 in CLK cycles
- TAAC = data read access time 1
- R2WFACTOR = write speed factor

If the host attempts to use a higher frequency, the card is not able to sustain data transfer. If this happens, the card sets the UNDERRUN error bit in the status register, aborts the transmission and waits in the data state for a stop command.

45.4.8 Erase: group erase and sector erase

The erasable unit of the MultiMediaCard is the erase group. The erase group is measured in write blocks, which are the basic writable units of the card. The size of the erase group is a card-specific parameter and defined in the CSD.

The host can erase a contiguous range of Erase Groups. Starting the erase process is a three-step sequence.

First the host defines the start address of the range using the ERASE_GROUP_START (CMD35) command, next it defines the last address of the range using the ERASE_GROUP_END (CMD36) command and, finally, it starts the erase process by issuing the ERASE (CMD38) command. The address field in the erase commands is an Erase Group address in byte units. The card ignores all LSBs below the Erase Group size, effectively rounding the address down to the Erase Group boundary.

If an erase command is received out of sequence, the card sets the ERASE_SEQ_ERROR bit in the status register and resets the whole sequence.

If an out-of-sequence (neither of the erase commands, except SEND_STATUS) command received, the card sets the ERASE_RESET status bit in the status register, resets the erase sequence and executes the last command.

If the erase range includes write protected blocks, they are left intact and only nonprotected blocks are erased. The WP_ERASE_SKIP status bit in the status register is set.

The card indicates that an erase is in progress by holding SDMMC_D low. The actual erase time may be quite long, and the host may issue CMD7 to deselect the card.

45.4.9 Wide bus selection or deselection

Wide bus (4-bit bus width) operation mode is selected or deselected using SET_BUS_WIDTH (ACMD6). The default bus width after power-up or GO_IDLE_STATE (CMD0) is 1 bit. SET_BUS_WIDTH (ACMD6) is only valid in a transfer state, which means that the bus width can be changed only after a card is selected by SELECT/DESELECT_CARD (CMD7).

45.4.10 Protection management

Three write protection methods for the cards are supported in the SDMMC card host module:

1. internal card write protection (card responsibility)
2. mechanical write protection switch (SDMMC card host module responsibility only)
3. password-protected card lock operation

Internal card write protection

Card data can be protected against write and erase. By setting the permanent or temporary write-protect bits in the CSD, the entire card can be permanently write-protected by the manufacturer or content provider. For cards that support write protection of groups of sectors by setting the WP_GRP_ENABLE bit in the CSD, portions of the data can be protected, and the write protection can be changed by the application. The write protection is in units of WP_GRP_SIZE sectors as specified in the CSD. The SET_WRITE_PROT and CLR_WRITE_PROT commands control the protection of the addressed group. The SEND_WRITE_PROT command is similar to a single block read command. The card sends

a data block containing 32 write protection bits (representing 32 write protect groups starting at the specified address) followed by 16 CRC bits. The address field in the write protect commands is a group address in byte units.

The card ignores all LSBs below the group size.

Mechanical write protect switch

A mechanical sliding tab on the side of the card allows the user to set or clear the write protection on a card. When the sliding tab is positioned with the window open, the card is write-protected, and when the window is closed, the card contents can be changed. A matched switch on the socket side indicates to the SDMMC card host module that the card is write-protected. The SDMMC card host module is responsible for protecting the card. The position of the write protect switch is unknown to the internal circuitry of the card.

Password protect

The password protection feature enables the SDMMC card host module to lock and unlock a card with a password. The password is stored in the 128-bit PWD register and its size is set in the 8-bit PWD_LEN register. These registers are nonvolatile so that a power cycle does not erase them. Locked cards respond to and execute certain commands. This means that the SDMMC card host module is allowed to reset, initialize, select, and query for status, however it is not allowed to access data on the card. When the password is set (as indicated by a nonzero value of PWD_LEN), the card is locked automatically after power-up. As with the CSD and CID register write commands, the lock/unlock commands are available in the transfer state only. In this state, the command does not include an address argument and the card must be selected before using it. The card lock/unlock commands have the structure and bus transaction types of a regular single-block write command. The transferred data block includes all of the required information for the command (the password setting mode, the PWD itself, and card lock/unlock). The command data block size is defined by the SDMMC card host module before it sends the card lock/unlock command, and has the structure shown in *Table 301*.

The bit settings are as follows:

- ERASE: setting it forces an erase operation. All other bits must be zero, and only the command byte is sent
- LOCK_UNLOCK: setting it locks the card. LOCK_UNLOCK can be set simultaneously with SET_PWD, however not with CLR_PWD
- CLR_PWD: setting it clears the password data
- SET_PWD: setting it saves the password data to memory
- PWD_LEN: it defines the length of the password in bytes
- PWD: the password (new or currently used, depending on the command)

The following sections list the command sequences to set/reset a password, lock/unlock the card, and force an erase.

Setting the password

1. Select a card (SELECT/DESELECT_CARD, CMD7), if none is already selected.
2. Define the block length (SET_BLOCKLEN, CMD16) to send, given by the 8-bit card lock/unlock mode, the 8-bit PWD_LEN, and the number of bytes of the new password.

When a password replacement is done, the block size must take into account that both the old and the new passwords are sent with the command.

3. Send LOCK/UNLOCK (CMD42) with the appropriate data block size on the data line including the 16-bit CRC. The data block indicates the mode (SET_PWD = 1), the length (PWD_LEN), and the password (PWD) itself. When a password replacement is done, the length value (PWD_LEN) includes the length of both passwords, the old and the new one, and the PWD field includes the old password (currently used) followed by the new password.
4. When the password is matched, the new password and its size are saved into the PWD and PWD_LEN fields, respectively. When the old password sent does not correspond (in size and/or content) to the expected password, the LOCK_UNLOCK_FAILED error bit is set in the card status register, and the password is not changed.

The password length field (PWD_LEN) indicates whether a password is currently set. When this field is nonzero, there is a password set and the card locks itself after power-up. It is possible to lock the card immediately in the current power session by setting the LOCK_UNLOCK bit (while setting the password) or sending an additional command for card locking.

Resetting the password

1. Select a card (SELECT/DESELECT_CARD, CMD7), if none is already selected.
2. Define the block length (SET_BLOCKLEN, CMD16) to send, given by the 8-bit card lock/unlock mode, the 8-bit PWD_LEN, and the number of bytes in the currently used password.
3. Send LOCK/UNLOCK (CMD42) with the appropriate data block size on the data line including the 16-bit CRC. The data block indicates the mode (CLR_PWD = 1), the length (PWD_LEN) and the password (PWD) itself. The LOCK_UNLOCK bit is ignored.
4. When the password is matched, the PWD field is cleared and PWD_LEN is set to 0. When the password sent does not correspond (in size and/or content) to the expected password, the LOCK_UNLOCK_FAILED error bit is set in the card status register, and the password is not changed.

Locking a card

1. Select a card (SELECT/DESELECT_CARD, CMD7), if none is already selected.
2. Define the block length (SET_BLOCKLEN, CMD16) to send, given by the 8-bit card lock/unlock mode (byte 0 in *Table 301*), the 8-bit PWD_LEN, and the number of bytes of the current password.
3. Send LOCK/UNLOCK (CMD42) with the appropriate data block size on the data line including the 16-bit CRC. The data block indicates the mode (LOCK_UNLOCK = 1), the length (PWD_LEN), and the password (PWD) itself.
4. When the password is matched, the card is locked and the CARD_IS_LOCKED status bit is set in the card status register. When the password sent does not correspond (in size and/or content) to the expected password, the LOCK_UNLOCK_FAILED error bit is set in the card status register, and the lock fails.

It is possible to set the password and to lock the card in the same sequence. In this case, the SDMMC card host module performs all the required steps for setting the password (see *Setting the password on page 1590*), however it is necessary to set the LOCK_UNLOCK bit in Step 3 when the new password command is sent.

When the password is previously set (PWD_LEN is not 0), the card is locked automatically after power on reset. An attempt to lock a locked card or to lock a card that does not have a password fails and the LOCK_UNLOCK_FAILED error bit is set in the card status register.

Unlocking the card

1. Select a card (SELECT/DESELECT_CARD, CMD7), if none is already selected.
2. Define the block length (SET_BLOCKLEN, CMD16) to send, given by the 8-bit cardlock/unlock mode (byte 0 in *Table 301*), the 8-bit PWD_LEN, and the number of bytes of the current password.
3. Send LOCK/UNLOCK (CMD42) with the appropriate data block size on the data line including the 16-bit CRC. The data block indicates the mode (LOCK_UNLOCK = 0), the length (PWD_LEN), and the password (PWD) itself.
4. When the password is matched, the card is unlocked and the CARD_IS_LOCKED status bit is cleared in the card status register. When the password sent is not correct in size and/or content and does not correspond to the expected password, the LOCK_UNLOCK_FAILED error bit is set in the card status register, and the card remains locked.

The unlocking function is only valid for the current power session. When the PWD field is not clear, the card is locked automatically on the next power-up.

An attempt to unlock an unlocked card fails and the LOCK_UNLOCK_FAILED error bit is set in the card status register.

Forcing erase

If the user has forgotten the password (PWD content), it is possible to access the card after clearing all the data on the card. This forced erase operation erases all card data and all password data.

1. Select a card (SELECT/DESELECT_CARD, CMD7), if none is already selected.
2. Set the block length (SET_BLOCKLEN, CMD16) to 1 byte. Only the 8-bit card lock/unlock byte (byte 0 in *Table 301*) is sent.
3. Send LOCK/UNLOCK (CMD42) with the appropriate data byte on the data line including the 16-bit CRC. The data block indicates the mode (ERASE = 1). All other bits must be zero.
4. When the ERASE bit is the only bit set in the data field, all card contents are erased, including the PWD and PWD_LEN fields, and the card is no longer locked. When any other bits are set, the LOCK_UNLOCK_FAILED error bit is set in the card status register and the card retains all of its data, and remains locked.

An attempt to use a force erase on an unlocked card fails and the LOCK_UNLOCK_FAILED error bit is set in the card status register.

45.4.11 Card status register

The response format R1 contains a 32-bit field named card status. This field is intended to transmit the card status information (which may be stored in a local status register) to the host. If not specified otherwise, the status entries are always related to the previously issued command.

Table 288 defines the different entries of the status. The type and clear condition fields in the table are abbreviated as follows:

Type:

- E: error bit
- S: status bit
- R: detected and set for the actual command response
- X: detected and set during command execution. The SDMMC card host must poll the card by issuing the status command to read these bits.

Clear condition:

- A: according to the card current state
- B: always related to the previous command. Reception of a valid command clears it (with a delay of one command)
- C: clear by read

Table 288. Card status

Bits	Identifier	Type	Value	Description	Clear condition
31	ADDRESS_ OUT_OF_RANGE	E R X	’0’= no error ’1’= error	The command address argument was out of the allowed range for this card. A multiple block or stream read/write operation is (although started in a valid address) attempting to read or write beyond the card capacity.	C
30	ADDRESS_MISALIGN	-	’0’= no error ’1’= error	The commands address argument (in accordance with the currently set block length) positions the first data block misaligned to the card physical blocks. A multiple block read/write operation (although started with a valid address/block-length combination) is attempting to read or write a data block which is not aligned with the physical blocks of the card.	C
29	BLOCK_LEN_ERROR	-	’0’= no error ’1’= error	Either the argument of a SET_BLOCKLEN command exceeds the maximum value allowed for the card, or the previously defined block length is illegal for the current command (e.g. the host issues a write command, the current block length is smaller than the maximum allowed value for the card and it is not allowed to write partial blocks)	C

Table 288. Card status (continued)

Bits	Identifier	Type	Value	Description	Clear condition
28	ERASE_SEQ_ERROR	-	’0’= no error ’1’= error	An error in the sequence of erase commands occurred.	C
27	ERASE_PARAM	E X	’0’= no error ’1’= error	An invalid selection of erase groups for erase occurred.	C
26	WP_VIOLATION	E X	’0’= no error ’1’= error	Attempt to program a write-protected block.	C
25	CARD_IS_LOCKED	S R	‘0’ = card unlocked ‘1’ = card locked	When set, signals that the card is locked by the host	A
24	LOCK_UNLOCK_ FAILED	E X	’0’= no error ’1’= error	Set when a sequence or password error has been detected in lock/unlock card command	C
23	COM_CRC_ERROR	E R	’0’= no error ’1’= error	The CRC check of the previous command failed.	B
22	ILLEGAL_COMMAND	E R	’0’= no error ’1’= error	Command not legal for the card state	B
21	CARD_ECC_FAILED	E X	’0’= success ’1’= failure	Card internal ECC was applied but failed to correct the data.	C
20	CC_ERROR	E R	’0’= no error ’1’= error	(Undefined by the standard) A card error occurred, which is not related to the host command.	C
19	ERROR	E X	’0’= no error ’1’= error	(Undefined by the standard) A generic card error related to the (and detected during) execution of the last host command (e.g. read or write failures).	C
18	Reserved				
17	Reserved				
16	CID/CSD_OVERWRITE	E X	’0’= no error ‘1’= error	Can be either of the following errors: – The CID register has already been written and cannot be overwritten – The read-only section of the CSD does not match the card contents – An attempt to reverse the copy (set as original) or permanent WP (unprotected) bits was made	C
15	WP_ERASE_SKIP	E X	’0’= not protected ’1’= protected	**Set when only partial address space was erased due to existing write**	C
14	CARD_ECC_DISABLED	S X	’0’= enabled ’1’= disabled	The command has been executed without using the internal ECC.	A

Table 288. Card status (continued)

Bits	Identifier	Type	Value	Description	Clear condition
13	ERASE_RESET	-	’0’= cleared ’1’= set	An erase sequence was cleared before executing because an out of erase sequence command was received (commands other than CMD35, CMD36, CMD38 or CMD13)	C
12:9	CURRENT_STATE	S R	0 = Idle 1 = Ready 2 = Ident 3 = Stby 4 = Tran 5 = Data 6 = Rcv 7 = Prg 8 = Dis 9 = Btst 10-15 = reserved	The state of the card when receiving the command. If the command execution causes a state change, it will be visible to the host in the response on the next command. The four bits are interpreted as a binary number between 0 and 15.	B
8	READY_FOR_DATA	S R	’0’= not ready ‘1’ = ready	Corresponds to buffer empty signalling on the bus	-
7	SWITCH_ERROR	E X	’0’= no error ’1’= switch error	If set, the card did not switch to the expected mode as requested by the SWITCH command	B
6	Reserved				
5	APP_CMD	S R	‘0’ = Disabled ‘1’ = Enabled	The card will expect ACMD, or an indication that the command has been interpreted as ACMD	C
4	Reserved for SD I/O Card				
3	AKE_SEQ_ERROR	E R	’0’= no error ’1’= error	Error in the sequence of the authentication process	C
2	Reserved for application specific commands				
1	Reserved for manufacturer test mode				
0					

45.4.12 SD status register

The SD status contains status bits that are related to the SD memory card proprietary features and may be used for future application-specific usage. The size of the SD Status is one data block of 512 bits. The contents of this register are transmitted to the SDMMC card host if ACMD13 is sent (CMD55 followed with CMD13). ACMD13 can be sent to a card in transfer state only (card is selected).

Table 289 defines the different entries of the SD status register. The type and clear condition fields in the table are abbreviated as follows:

Type:

- E: error bit
- S: status bit
- R: detected and set for the actual command response
- X: detected and set during command execution. The SDMMC card Host must poll the card by issuing the status command to read these bits

Clear condition:

- A: according to the card current state
- B: always related to the previous command. Reception of a valid command clears it (with a delay of one command)
- C: clear by read

Table 289. SD status

Bits	Identifier	Type	Value	Description	Clear condition
511: 510	DAT_BUS_WIDTH	S R	’00’= 1 (default) ‘01’= reserved ‘10’= 4 bit width ‘11’= reserved	Shows the currently defined databus width that was defined by SET_BUS_WIDTH command	A
509	SECURED_MODE	S R	’0’= Not in the mode ’1’= In Secured Mode	Card is in Secured Mode of operation (refer to the “SD Security Specification”).	A
508: 496	Reserved				
495: 480	SD_CARD_TYPE	S R	’00xxh’= SD Memory Cards as defined in Physical Spec Ver1.01-2.00 (’x’= don’t care). The following cards are currently defined: ’0000’= Regular SD RD/WR Card. ’0001’= SD ROM Card	In the future, the 8 LSBs will be used to define different variations of an SD memory card (each bit will define different SD types). The 8 MSBs will be used to define SD Cards that do not comply with current SD physical layer specification.	A
479: 448	SIZE_OF_PROTECT ED_AREA	S R	Size of protected area (See below)	(See below)	A
447: 440	SPEED_CLASS	S R	Speed Class of the card (See below)	(See below)	A

Table 289. SD status (continued)

Bits	Identifier	Type	Value	Description	Clear condition
439: 432	PERFORMANCE_ MOVE	S R	Performance of move indicated by 1 [MB/s] step. (See below)	(See below)	A
431:428	AU_SIZE	S R	Size of AU (See below)	(See below)	A
427:424	Reserved				
423:408	ERASE_SIZE	S R	Number of AUs to be erased at a time	(See below)	A
407:402	ERASE_TIMEOUT	S R	Timeout value for erasing areas specified by UNIT_OF_ERASE_AU	(See below)	A
401:400	ERASE_OFFSET	S R	Fixed offset value added to erase time.	(See below)	A
399:312	Reserved				
311:0	Reserved for Manufacturer				

SIZE_OF_PROTECTED_AREA

Setting this field differs between standard- and high-capacity cards. In the case of a standard-capacity card, the capacity of protected area is calculated as follows:

Protected area = SIZE_OF_PROTECTED_AREA_* MULT * BLOCK_LEN.

SIZE_OF_PROTECTED_AREA is specified by the unit in MULT*BLOCK_LEN.

In the case of a high-capacity card, the capacity of protected area is specified in this field:

Protected area = SIZE_OF_PROTECTED_AREA

SIZE_OF_PROTECTED_AREA is specified by the unit in bytes.

SPEED_CLASS

This 8-bit field indicates the speed class and the value can be calculated by $P_W/2$ (where P_W is the write performance).

Table 290. Speed class code field

SPEED_CLASS	Value definition
00h	Class 0
01h	Class 2
02h	Class 4
03h	Class 6
04h – FFh	Reserved

PERFORMANCE_MOVE

This 8-bit field indicates Pm (performance move) and the value can be set by 1 [MB/sec] steps. If the card does not move used RUs (recording units), Pm should be considered as infinity. Setting the field to FFh means infinity.

Table 291. Performance move field

PERFORMANCE_MOVE	Value definition
00h	Not defined
01h	1 [MB/sec]
02h	02h 2 [MB/sec]
---------	---------
FEh	254 [MB/sec]
FFh	Infinity

AU_SIZE

This 4-bit field indicates the AU size and the value can be selected in the power of 2 base from 16 KB.

Table 292. AU_SIZE field

AU_SIZE	Value definition
00h	Not defined
01h	16 KB
02h	32 KB
03h	64 KB
04h	128 KB
05h	256 KB
06h	512 KB
07h	1 MB
08h	2 MB
09h	4 MB
Ah – Fh	Reserved

The maximum AU size, which depends on the card capacity, is defined in *Table 293*. The card can be set to any AU size between RU size and maximum AU size.

Table 293. Maximum AU size

Capacity	16 MB-64 MB	128 MB-256 MB	512 MB	1 GB-32 GB
Maximum AU Size	512 KB	1 MB	2 MB	4 MB

ERASE_SIZE

This 16-bit field indicates N_{ERASE}. When N_{ERASE} numbers of AUs are erased, the timeout value is specified by ERASE_TIMEOUT (Refer to *ERASE_TIMEOUT*). The host should determine the proper number of AUs to be erased in one operation so that the host can show the progress of the erase operation. If this field is set to 0, the erase timeout calculation is not supported.

Table 294. Erase size field

ERASE_SIZE	Value definition
0000h	Erase timeout calculation is not supported.
0001h	1 AU
0002h	2 AU
0003h	3 AU
---------	---------
FFFFh	65535 AU

ERASE_TIMEOUT

This 6-bit field indicates T_{ERASE} and the value indicates the erase timeout from offset when multiple AUs are being erased as specified by ERASE_SIZE. The range of ERASE_TIMEOUT can be defined as up to 63 seconds and the card manufacturer can choose any combination of ERASE_SIZE and ERASE_TIMEOUT depending on the implementation. Determining ERASE_TIMEOUT determines the ERASE_SIZE.

Table 295. Erase timeout field

ERASE_TIMEOUT	Value definition
00	Erase timeout calculation is not supported.
01	1 [sec]
02	2 [sec]
03	3 [sec]
---------	---------
63	63 [sec]

ERASE_OFFSET

This 2-bit field indicates T_{OFFSET} and one of four values can be selected. This field is meaningless if the ERASE_SIZE and ERASE_TIMEOUT fields are set to 0.

Table 296. Erase offset field

ERASE_OFFSET	Value definition
0h	0 [sec]
1h	1 [sec]

Table 296. Erase offset field (continued)

ERASE_OFFSET	Value definition
2h	2 [sec]
3h	3 [sec]

45.4.13 SD I/O mode

SD I/O interrupts

To allow the SD I/O card to interrupt the MultiMediaCard/SD module, an interrupt function is available on a pin on the SD interface. Pin 8, used as SDMMC_D1 when operating in the 4-bit SD mode, signals the cards interrupt to the MultiMediaCard/SD module. The use of the interrupt is optional for each card or function within a card. The SD I/O interrupt is level-sensitive, which means that the interrupt line must be held active (low) until it is either recognized and acted upon by the MultiMediaCard/SD module or deasserted due to the end of the interrupt period. After the MultiMediaCard/SD module has serviced the interrupt, the interrupt status bit is cleared via an I/O write to the appropriate bit in the SD I/O card's internal registers. The interrupt output of all SD I/O cards is active low and the application must provide pull-up resistors externally on all data lines (SDMMC_D[3:0]). The MultiMediaCard/SD module samples the level of pin 8 (SDMMC_D/IRQ) into the interrupt detector only during the interrupt period. At all other times, the MultiMediaCard/SD module ignores this value.

The interrupt period is applicable for both memory and I/O operations. The definition of the interrupt period for operations with single blocks is different from the definition for multiple-block data transfers.

SD I/O suspend and resume

Within a multifunction SD I/O or a card with both I/O and memory functions, there are multiple devices (I/O and memory) that share access to the MMC/SD bus. To share access to the MMC/SD module among multiple devices, SD I/O and combo cards optionally implement the concept of suspend/resume. When a card supports suspend/resume, the MMC/SD module can temporarily halt a data transfer operation to one function or memory (suspend) to free the bus for a higher-priority transfer to a different function or memory. After this higher-priority transfer is complete, the original transfer is resumed (restarted) where it left off. Support of suspend/resume is optional on a per-card basis. To perform the suspend/resume operation on the MMC/SD bus, the MMC/SD module performs the following steps:

1. Determines the function currently using the SDMMC_D [3:0] line(s)
2. Requests the lower-priority or slower transaction to suspend
3. Waits for the transaction suspension to complete
4. Begins the higher-priority transaction
5. Waits for the completion of the higher priority transaction
6. Restores the suspended transaction

SD I/O ReadWait

The optional ReadWait (RW) operation is defined only for the SD 1-bit and 4-bit modes. The ReadWait operation allows the MMC/SD module to signal a card that it is reading multiple

registers (IO_RW_EXTENDED, CMD53) to temporarily stall the data transfer while allowing the MMC/SD module to send commands to any function within the SD I/O device. To determine when a card supports the ReadWait protocol, the MMC/SD module must test capability bits in the internal card registers. The timing for ReadWait is based on the interrupt period.

45.4.14 Commands and responses

Application-specific and general commands

The SDMMC card host module system is designed to provide a standard interface for a variety of applications types. In this environment, there is a need for specific customer/application features. To implement these features, two types of generic commands are defined in the standard: application-specific commands (ACMD) and general commands (GEN_CMD).

When the card receives the APP_CMD (CMD55) command, the card expects the next command to be an application-specific command. ACMDs have the same structure as regular MultiMediaCard commands and can have the same CMD number. The card recognizes it as ACMD because it appears after APP_CMD (CMD55). When the command immediately following the APP_CMD (CMD55) is not a defined application-specific command, the standard command is used. For example, when the card has a definition for SD_STATUS (ACMD13), and receives CMD13 immediately following APP_CMD (CMD55), this is interpreted as SD_STATUS (ACMD13). However, when the card receives CMD7 immediately following APP_CMD (CMD55) and the card does not have a definition for ACMD7, this is interpreted as the standard (SELECT/DESELECT_CARD) CMD7.

To use one of the manufacturer-specific ACMDs the SD card Host must perform the following steps:

1. Send APP_CMD (CMD55)
   The card responds to the MultiMediaCard/SD module, indicating that the APP_CMD bit is set and an ACMD is now expected.
2. Send the required ACMD
   The card responds to the MultiMediaCard/SD module, indicating that the APP_CMD bit is set and that the accepted command is interpreted as an ACMD. When a nonACMD is sent, it is handled by the card as a normal MultiMediaCard command and the APP_CMD bit in the card status register stays clear.

When an invalid command is sent (neither ACMD nor CMD) it is handled as a standard MultiMediaCard illegal command error.

The bus transaction for a GEN_CMD is the same as the single-block read or write commands (WRITE_BLOCK, CMD24 or READ_SINGLE_BLOCK,CMD17). In this case, the argument denotes the direction of the data transfer rather than the address, and the data block has vendor-specific format and meaning.

The card must be selected (in transfer state) before sending GEN_CMD (CMD56). The data block size is defined by SET_BLOCKLEN (CMD16). The response to GEN_CMD (CMD56) is in R1b format.

Command types

Both application-specific and general commands are divided into the four following types:

- **broadcast command (BC)**: sent to all cards; no responses returned.
- **broadcast command with response (BCR):** sent to all cards; responses received from all cards simultaneously.
- **addressed (point-to-point) command (AC):** sent to the card that is selected; does not include a data transfer on the SDMMC_D line(s).
- **addressed (point-to-point) data transfer command (ADTC):** sent to the card that is selected; includes a data transfer on the SDMMC_D line(s).

Command formats

See *Table 280 on page 1576* for command formats.

Commands for the MultiMediaCard/SD module

Table 297. Block-oriented write commands

CMD index	Type	Argument	Response format	Abbreviation	Description
CMD23	ac	[31:16] set to 0 [15:0] number of blocks	R1	SET_BLOCK_COUNT	Defines the number of blocks which are going to be transferred in the multiple-block read or write command that follows.
CMD24	adtc	[31:0] data address	R1	WRITE_BLOCK	Writes a block of the size selected by the SET_BLOCKLEN command.
CMD25	adtc	[31:0] data address	R1	WRITE_MULTIPLE_BLOCK	Continuously writes blocks of data until a STOP_TRANSMISSION follows or the requested number of blocks has been received.
CMD26	adtc	[31:0] stuff bits	R1	PROGRAM_CID	Programming of the card identification register. This command must be issued only once per card. The card contains hardware to prevent this operation after the first programming. Normally this command is reserved for manufacturer.
CMD27	adtc	[31:0] stuff bits	R1	PROGRAM_CSD	Programming of the programmable bits of the CSD.

Table 298. Block-oriented write protection commands

CMD index	Type	Argument	Response format	Abbreviation	Description
CMD28	ac	[31:0] data address	R1b	SET_WRITE_PROT	If the card has write protection features, this command sets the write protection bit of the addressed group. The properties of write protection are coded in the card-specific data (WP_GRP_SIZE).
CMD29	ac	[31:0] data address	R1b	CLR_WRITE_PROT	If the card provides write protection features, this command clears the write protection bit of the addressed group.
CMD30	adtc	[31:0] write protect data address	R1	SEND_WRITE_PROT	If the card provides write protection features, this command asks the card to send the status of the write protection bits.
CMD31	Reserved				

Table 299. Erase commands

CMD index	Type	Argument	Response format	Abbreviation	Description
CMD32 ... CMD34	Reserved. These command indexes cannot be used in order to maintain backward compatibility with older versions of the MultiMediaCard.				
CMD35	ac	[31:0] data address	R1	ERASE_GROUP_START	Sets the address of the first erase group within a range to be selected for erase.
CMD36	ac	[31:0] data address	R1	ERASE_GROUP_END	Sets the address of the last erase group within a continuous range to be selected for erase.
CMD37	Reserved. This command index cannot be used in order to maintain backward compatibility with older versions of the MultiMediaCards				
CMD38	ac	[31:0] stuff bits	R1	ERASE	Erases all previously selected write blocks.

Table 300. I/O mode commands

CMD index	Type	Argument	Response format	Abbreviation	Description
CMD39	ac	[31:16] RCA [15:15] register write flag [14:8] register address [7:0] register data	R4	FAST_IO	Used to write and read 8-bit (register) data fields. The command addresses a card and a register and provides the data for writing if the write flag is set. The R4 response contains data read from the addressed register. This command accesses application-dependent registers that are not defined in the MultiMediaCard standard.

Table 300. I/O mode commands (continued)

CMD index	Type	Argument	Response format	Abbreviation	Description
CMD40	bcr	[31:0] stuff bits	R5	GO_IRQ_STATE	Places the system in the interrupt mode.
CMD41	Reserved				

Table 301. Lock card

CMD index	Type	Argument	Response format	Abbreviation	Description
CMD42	adtc	[31:0] stuff bits	R1b	LOCK_UNLOCK	Sets/resets the password or locks/unlocks the card. The size of the data block is set by the SET_BLOCK_LEN command.
CMD43 ... CMD54	Reserved				

Table 302. Application-specific commands

CMD index	Type	Argument	Response format	Abbreviation	Description
CMD55	ac	[31:16] RCA [15:0] stuff bits	R1	APP_CMD	Indicates to the card that the next command bits is an application specific command rather than a standard command
CMD56	adtc	[31:1] stuff bits [0]: RD/WR	-	-	Used either to transfer a data block to the card or to get a data block from the card for general purpose/application-specific commands. The size of the data block shall be set by the SET_BLOCK_LEN command.
CMD57 ... CMD59	Reserved.				
CMD60 ... CMD63	Reserved for manufacturer.				

45.5 Response formats

All responses are sent via the SDMMC command line SDMMC_CMD. The response transmission always starts with the left bit of the bit string corresponding to the response code word. The code length depends on the response type.

A response always starts with a start bit (always 0), followed by the bit indicating the direction of transmission (card = 0). A value denoted by x in the tables below indicates a variable entry. All responses, except for the R3 response type, are protected by a CRC. Every command code word is terminated by the end bit (always 1).

There are five types of responses. Their formats are defined as follows:

45.5.1 R1 (normal response command)

Code length = 48 bits. The 45:40 bits indicate the index of the command to be responded to, this value being interpreted as a binary-coded number (between 0 and 63). The status of the card is coded in 32 bits.

Table 303. R1 response

Bit position	Width (bits	Value	Description
47	1	0	Start bit
46	1	0	Transmission bit
[45:40]	6	X	Command index
[39:8]	32	X	Card status
[7:1]	7	X	CRC7
0	1	1	End bit

45.5.2 R1b

It is identical to R1 with an optional busy signal transmitted on the data line. The card may become busy after receiving these commands based on its state prior to the command reception.

45.5.3 R2 (CID, CSD register)

Code length = 136 bits. The contents of the CID register are sent as a response to the CMD2 and CMD10 commands. The contents of the CSD register are sent as a response to CMD9. Only the bits [127...1] of the CID and CSD are transferred, the reserved bit [0] of these registers is replaced by the end bit of the response. The card indicates that an erase is in progress by holding SDMMC_D0 low. The actual erase time may be quite long, and the host may issue CMD7 to deselect the card.

Table 304. R2 response

Bit position	Width (bits	Value	Description
135	1	0	Start bit
134	1	0	Transmission bit
[133:128]	6	‘111111’	Command index
[127:1]	127	X	Card status
0	1	1	End bit

45.5.4 R3 (OCR register)

Code length: 48 bits. The contents of the OCR register are sent as a response to CMD1. The level coding is as follows: restricted voltage windows = low, card busy = low.

Table 305. R3 response

Bit position	Width (bits	Value	Description
47	1	0	Start bit
46	1	0	Transmission bit
[45:40]	6	‘111111’	Reserved
[39:8]	32	X	OCR register
[7:1]	7	‘1111111’	Reserved
0	1	1	End bit

45.5.5 R4 (Fast I/O)

Code length: 48 bits. The argument field contains the RCA of the addressed card, the register address to be read out or written to, and its content.

Table 306. R4 response

Bit position		Width (bits	Value	Description
47		1	0	Start bit
46		1	0	Transmission bit
[45:40]		6	‘100111’	CMD39
[39:8] Argument field	[31:16]	16	X	RCA
	[15:8]	8	X	register address
	[7:0]	8	X	read register contents
[7:1]		7	X	CRC7
0		1	1	End bit

45.5.6 R4b

For SD I/O only: an SDIO card receiving the CMD5 will respond with a unique SDIO response R4. The format is:

Table 307. R4b response

Bit position	Width (bits	Value	Description
47	1	0	Start bit
46	1	0	Transmission bit
[45:40]	6	X	Reserved

Table 307. R4b response (continued)

Bit position		Width (bits	Value	Description
[39:8] Argument field	39	16	X	Card is ready
	[38:36]	3	X	Number of I/O functions
	35	1	X	Present memory
	[34:32]	3	X	Stuff bits
	[31:8]	24	X	I/O ORC
[7:1]		7	X	Reserved
0		1	1	End bit

Once an SD I/O card has received a CMD5, the I/O portion of that card is enabled to respond normally to all further commands. This I/O enable of the function within the I/O card will remain set until a reset, power cycle or CMD52 with write to I/O reset is received by the card. Note that an SD memory-only card may respond to a CMD5. The proper response for a memory-only card would be *Present memory* = 1 and *Number of I/O functions* = 0. A memory-only card built to meet the SD Memory Card specification version 1.0 would detect the CMD5 as an illegal command and not respond. The I/O aware host will send CMD5. If the card responds with response R4, the host determines the card's configuration based on the data contained within the R4 response.

45.5.7 R5 (interrupt request)

Only for MultiMediaCard. Code length: 48 bits. If the response is generated by the host, the RCA field in the argument will be 0x0.

Table 308. R5 response

Bit position		Width (bits	Value	Description
47		1	0	Start bit
46		1	0	Transmission bit
[45:40]		6	'101000'	CMD40
[39:8] Argument field	[31:16]	16	X	RCA [31:16] of winning card or of the host
	[15:0]	16	X	Not defined. May be used for IRQ data
[7:1]		7	X	CRC7
0		1	1	End bit

45.5.8 R6

Only for SD I/O. The normal response to CMD3 by a memory device. It is shown in *Table 309*.

Table 309. R6 response

Bit position		Width (bits)	Value	Description
47		1	0	Start bit
46		1	0	Transmission bit
[45:40]		6	‘101000’	CMD40
[39:8] Argument field	[31:16]	16	X	RCA [31:16] of winning card or of the host
	[15:0]	16	X	Not defined. May be used for IRQ data
[7:1]		7	X	CRC7
0		1	1	End bit

The card [23:8] status bits are changed when CMD3 is sent to an I/O-only card. In this case, the 16 bits of response are the SD I/O-only values:

- Bit [15] COM_CRC_ERROR
- Bit [14] ILLEGAL_COMMAND
- Bit [13] ERROR
- Bits [12:0] Reserved

45.6 SDIO I/O card-specific operations

The following features are SD I/O-specific operations:

- SDIO read wait operation by SDMMC_D2 signalling
- SDIO read wait operation by stopping the clock
- SDIO suspend/resume operation (write and read suspend)
- SDIO interrupts

The SDMMC supports these operations only if the SDMMC_DCTRL[11] bit is set, except for read suspend that does not need specific hardware implementation.

45.6.1 SDIO I/O read wait operation by SDMMC_D2 signalling

It is possible to start the readwait interval before the first block is received: when the data path is enabled (SDMMC_DCTRL[0] bit set), the SDIO-specific operation is enabled (SDMMC_DCTRL[11] bit set), read wait starts (SDMMC_DCTRL[10] =0 and SDMMC_DCTRL[8] =1) and data direction is from card to SDMMC (SDMMC_DCTRL[1] = 1), the DPSM directly moves from Idle to Readwait. In Readwait the DPSM drives SDMMC_D2 to 0 after 2 SDMMC_CK clock cycles. In this state, when you set the RWSTOP bit (SDMMC_DCTRL[9]), the DPSM remains in Wait for two more SDMMC_CK clock cycles to drive SDMMC_D2 to 1 for one clock cycle (in accordance with SDIO specification). The DPSM then starts waiting again until it receives data from the card. The DPSM will not start a readwait interval while receiving a block even if read wait start is set: the readwait interval will start after the CRC is received. The RWSTOP bit has to be cleared to start a new read wait operation. During the readwait interval, the SDMMC can detect SDIO interrupts on SDMMC_D1.

45.6.2 SDIO read wait operation by stopping SDMMC_CK

If the SDIO card does not support the previous read wait method, the SDMMC can perform a read wait by stopping SDMMC_CK (SDMMC_DCTRL is set just like in the method presented in *Section 45.6.1*, but SDMMC_DCTRL[10] =1): DSPM stops the clock two SDMMC_CK cycles after the end bit of the current received block and starts the clock again after the read wait start bit is set.

As SDMMC_CK is stopped, any command can be issued to the card. During a read/wait interval, the SDMMC can detect SDIO interrupts on SDMMC_D1.

45.6.3 SDIO suspend/resume operation

While sending data to the card, the SDMMC can suspend the write operation. the SDMMC_CMD[11] bit is set and indicates to the CPSM that the current command is a suspend command. The CPSM analyzes the response and when the ACK is received from the card (suspend accepted), it acknowledges the DPSM that goes Idle after receiving the CRC token of the current block.

The hardware does not save the number of the remaining block to be sent to complete the suspended operation (resume).

The write operation can be suspended by software, just by disabling the DPSM (SDMMC_DCTRL[0] =0) when the ACK of the suspend command is received from the card. The DPSM enters then the Idle state.

To suspend a read: the DPSM waits in the Wait_r state as the function to be suspended sends a complete packet just before stopping the data transaction. The application continues reading RxFIFO until the FIF0 is empty, and the DPSM goes Idle automatically.

45.6.4 SDIO interrupts

SDIO interrupts are detected on the SDMMC_D1 line once the SDMMC_DCTRL[11] bit is set.

When SDIO interrupt is detected, SDMMC_STA[22] (SDIOIT) bit is set. This static bit can be cleared with clear bit SDMMC_ICR[22] (SDIOITC). An interrupt can be generated when SDIOIT status bit is set. Separated interrupt enable SDMMC_MASK[22] bit (SDIOITE) is available to enable and disable interrupt request.

When SD card interrupt occurs (SDMMC_STA[22] bit set), host software follows below steps to handle it.

1. Disable SDIOIT interrupt signaling by clearing SDIOITE bit (SDMMC_MASK[22] = ‘0’),
2. Serve card interrupt request, and clear the source of interrupt on the SD card,
3. Clear SDIOIT bit by writing ‘1’ to SDIOITC bit (SDMMC_ICR[22] = ‘1’),
4. Enable SDIOIT interrupt signaling by writing ‘1’ to SDIOITE bit (SDMMC_MASK[22] = ‘1’).

Steps 2 to 4 can be executed out of the SDIO interrupt service routine.

45.7 HW flow control

The HW flow control functionality is used to avoid FIFO underrun (TX mode) and overrun (RX mode) errors.

The behavior is to stop SDMMC_CK and freeze SDMMC state machines. The data transfer is stalled while the FIFO is unable to transmit or receive data. Only state machines clocked by SDMMCCLK are frozen, the APB2 interface is still alive. The FIFO can thus be filled or emptied even if flow control is activated.

To enable HW flow control, the SDMMC_CLKCR[14] register bit must be set to 1. After reset Flow Control is disabled.

45.8 SDMMC registers

The device communicates to the system via 32-bit-wide control registers accessible via APB2.

45.8.1 SDMMC power control register (SDMMC_POWER)

Address offset: 0x00

Reset value: 0x0000 0000

31	30	29	28	27	26	25	24	23	22	21	20	19	18	17	16
Res.	Res.	Res.	Res.	Res.	Res.	Res.	Res.	Res.	Res.	Res.	Res.	Res.	Res.	Res.	Res.

15	14	13	12	11	10	9	8	7	6	5	4	3	2	1	0
Res.	Res.	Res.	Res.	Res.	Res.	Res.	Res.	Res.	Res.	Res.	Res.	Res.	Res.	PWRCTRL	
														rw	rw

Bits 31:2 Reserved, must be kept at reset value.

[1:0] **PWRCTRL:** Power supply control bits.
These bits are used to define the current functional state of the card clock:
00: Power-off: the clock to card is stopped.
01: Reserved
10: Reserved power-up
11: Power-on: the card is clocked.

Note: At least seven PCLK2 clock periods are needed between two write accesses to this register.

Note: After a data write, data cannot be written to this register for three SDMMCCLK clock periods plus two PCLK2 clock periods.

45.8.2 SDMMC clock control register (SDMMC_CLKCR)

Address offset: 0x04

Reset value: 0x0000 0000

The SDMMC_CLKCR register controls the SDMMC_CK output clock.

31	30	29	28	27	26	25	24	23	22	21	20	19	18	17	16
Res.	Res.	Res.	Res.	Res.	Res.	Res.	Res.	Res.	Res.	Res.	Res.	Res.	Res.	Res.	Res.

15	14	13	12	11	10	9	8	7	6	5	4	3	2	1	0
Res.	HWFC_EN	NEGEDGE	WIDBUS		BYPASS	PWRSAV	CLKEN	CLKDIV							
	rw	rw	rw	rw	rw	rw	rw	rw	rw	rw	rw	rw	rw	rw	rw

Bits 31:15 Reserved, must be kept at reset value.

Bit 14 **HWFC_EN:** HW Flow Control enable

0b: HW Flow Control is disabled

1b: HW Flow Control is enabled

When HW Flow Control is enabled, the meaning of the TXFIFOE and RXFIFOF interrupt signals, see SDMMC Status register definition in *Section 45.8.11*.

Bit 13 **NEGEDGE:** SDMMC_CK dephasing selection bit

0b: Command and Data changed on the SDMMCCLK falling edge succeeding the rising edge of SDMMC_CK. (SDMMC_CK rising edge occurs on SDMMCCLK rising edge).

1b: Command and Data changed on the SDMMC_CK falling edge.

When BYPASS is active, the data and the command change on SDMMCCLK falling edge whatever NEGEDGE value.

Bits 12:11 **WIDBUS:** Wide bus mode enable bit

00: Default bus mode: SDMMC_D0 used

01: 4-wide bus mode: SDMMC_D[3:0] used

10: 8-wide bus mode: SDMMC_D[7:0] used

Bit 10 **BYPASS:** Clock divider bypass enable bit

0: Disable bypass: SDMMCCLK is divided according to the CLKDIV value before driving the SDMMC_CK output signal.

1: Enable bypass: SDMMCCLK directly drives the SDMMC_CK output signal.

Bit 9 **PWRSAV:** Power saving configuration bit

For power saving, the SDMMC_CK clock output can be disabled when the bus is idle by setting PWRSAV:

0: SDMMC_CK clock is always enabled

1: SDMMC_CK is only enabled when the bus is active

Bit 8 **CLKEN:** Clock enable bit

0: SDMMC_CK is disabled

1: SDMMC_CK is enabled

Bits 7:0 **CLKDIV:** Clock divide factor

This field defines the divide factor between the input clock (SDMMCCLK) and the output clock (SDMMC_CK): SDMMC_CK frequency = SDMMCCLK / [CLKDIV + 2].

Note: 1 While the SD/SDIO card or MultiMediaCard is in identification mode, the SDMMC_CK frequency must be less than 400 kHz.

2 The clock frequency can be changed to the maximum card bus frequency when relative card addresses are assigned to all cards.

3 After a data write, data cannot be written to this register for three SDMMCCLK clock periods plus two PCLK2 clock periods. SDMMC_CK can also be stopped during the read wait interval for SD I/O cards: in this case the SDMMC_CLKCR register does not control SDMMC_CK.

45.8.3 SDMMC argument register (SDMMC_ARG)

Address offset: 0x08

Reset value: 0x0000 0000

The SDMMC_ARG register contains a 32-bit command argument, which is sent to a card as part of a command message.

31	30	29	28	27	26	25	24	23	22	21	20	19	18	17	16
CMDARG[31:16]															
rw	rw	rw	rw	rw	rw	rw	rw	rw	rw	rw	rw	rw	rw	rw	rw
15	14	13	12	11	10	9	8	7	6	5	4	3	2	1	0
CMDARG[15:0]															
rw	rw	rw	rw	rw	rw	rw	rw	rw	rw	rw	rw	rw	rw	rw	rw

Bits 31:0 **CMDARG:** Command argument

Command argument sent to a card as part of a command message. If a command contains an argument, it must be loaded into this register before writing a command to the command register.

45.8.4 SDMMC command register (SDMMC_CMD)

Address offset: 0x0C

Reset value: 0x0000 0000

The SDMMC_CMD register contains the command index and command type bits. The command index is sent to a card as part of a command message. The command type bits control the command path state machine (CPSM).

31	30	29	28	27	26	25	24	23	22	21	20	19	18	17	16
Res.	Res.	Res.	Res.	Res.	Res.	Res.	Res.	Res.	Res.	Res.	Res.	Res.	Res.	Res.	Res.
15	14	13	12	11	10	9	8	7	6	5	4	3	2	1	0
Res.	Res.	Res.	Res.	SDIO Suspend	CPSM EN	WAIT PEND	WAIT INT	WAITRESP		CMDINDEX					
				rw	rw	rw	rw	rw	rw	rw	rw	rw	rw	rw	rw

Bits 31:12 Reserved, must be kept at reset value.

Bit 11 **SDIOSuspend:** SD I/O suspend command

If this bit is set, the command to be sent is a suspend command (to be used only with SDIO card).

Bit 10 **CPSMEN:** Command path state machine (CPSM) Enable bit

If this bit is set, the CPSM is enabled.

Bit 9 **WAITPEND:** CPSM Waits for ends of data transfer (CmdPend internal signal).

If this bit is set, the CPSM waits for the end of data transfer before it starts sending a command. This feature is available only with Stream data transfer mode SDMMC_DCTRL[2] = 1.

Bit 8 **WAITINT:** CPSM waits for interrupt request
If this bit is set, the CPSM disables command timeout and waits for an interrupt request.

Bits 7:6 WAITRESP: Wait for response bits
They are used to configure whether the CPSM is to wait for a response, and if yes, which kind of response.
00: No response, expect CMDSENT flag
01: Short response, expect CMDREND or CCRCFAIL flag
10: No response, expect CMDSENT flag
11: Long response, expect CMDREND or CCRCFAIL flag

Bits 5:0 **CMDINDEX:** Command index
The command index is sent to the card as part of a command message.

Note: 1 After a data write, data cannot be written to this register for three SDMMCCLK clock periods plus two PCLK2 clock periods.

2 MultiMediaCards can send two kinds of response: short responses, 48 bits long, or long responses,136 bits long. SD card and SD I/O card can send only short responses, the argument can vary according to the type of response: the software will distinguish the type of response according to the sent command.

45.8.5 SDMMC command response register (SDMMC_RESPCMD)

Address offset: 0x10

Reset value: 0x0000 0000

The SDMMC_RESPCMD register contains the command index field of the last command response received. If the command response transmission does not contain the command index field (long or OCR response), the RESPCMD field is unknown, although it must contain 111111b (the value of the reserved field from the response).

31	30	29	28	27	26	25	24	23	22	21	20	19	18	17	16
Res.	Res.	Res.	Res.	Res.	Res.	Res.	Res.	Res.	Res.	Res.	Res.	Res.	Res.	Res.	Res.

15	14	13	12	11	10	9	8	7	6	5	4	3	2	1	0
Res.	Res.	Res.	Res.	Res.	Res.	Res.	Res.	Res.	Res.	RESPCMD					
										r	r	r	r	r	r

Bits 31:6 Reserved, must be kept at reset value.

Bits 5:0 **RESPCMD:** Response command index
Read-only bit field. Contains the command index of the last command response received.

45.8.6 SDMMC response 1..4 register (SDMMC_RESPx)

Address offset: (0x10 + (4 × x)); x = 1..4

Reset value: 0x0000 0000

The SDMMC_RESP1/2/3/4 registers contain the status of a card, which is part of the received response.

31	30	29	28	27	26	25	24	23	22	21	20	19	18	17	16
CARDSTATUSx[31:16]															
r	r	r	r	r	r	r	r	r	r	r	r	r	r	r	r
15	14	13	12	11	10	9	8	7	6	5	4	3	2	1	0
CARDSTATUSx[15:0]															
r	r	r	r	r	r	r	r	r	r	r	r	r	r	r	r

Bits 31:0 **CARDSTATUSx:** see *Table 310*.

The Card Status size is 32 or 127 bits, depending on the response type.

Table 310. Response type and SDMMC_RESPx registers

Register	Short response	Long response
SDMMC_RESP1	Card Status[31:0]	Card Status [127:96]
SDMMC_RESP2	Unused	Card Status [95:64]
SDMMC_RESP3	Unused	Card Status [63:32]
SDMMC_RESP4	Unused	Card Status [31:1]0b

The most significant bit of the card status is received first. The SDMMC_RESP4 register LSB is always 0b.

45.8.7 SDMMC data timer register (SDMMC_DTIMER)

Address offset: 0x24

Reset value: 0x0000 0000

The SDMMC_DTIMER register contains the data timeout period, in card bus clock periods.

A counter loads the value from the SDMMC_DTIMER register, and starts decrementing when the data path state machine (DPSM) enters the Wait_R or Busy state. If the timer reaches 0 while the DPSM is in either of these states, the timeout status flag is set.

31	30	29	28	27	26	25	24	23	22	21	20	19	18	17	16
DATATIME[31:16]															
rw	rw	rw	rw	rw	rw	rw	rw	rw	rw	rw	rw	rw	rw	rw	rw
15	14	13	12	11	10	9	8	7	6	5	4	3	2	1	0
DATATIME[15:0]															
rw	rw	rw	rw	rw	rw	rw	rw	rw	rw	rw	rw	rw	rw	rw	rw

Bits 31:0 **DATATIME:** Data timeout period

Data timeout period expressed in card bus clock periods.

Note: A data transfer must be written to the data timer register and the data length register before being written to the data control register.

45.8.8 SDMMC data length register (SDMMC_DLEN)

Address offset: 0x28

Reset value: 0x0000 0000

The SDMMC_DLEN register contains the number of data bytes to be transferred. The value is loaded into the data counter when data transfer starts.

31	30	29	28	27	26	25	24	23	22	21	20	19	18	17	16
Res.	Res.	Res.	Res.	Res.	Res.	Res.	DATALENGTH[24:16]								
							rw	rw	rw	rw	rw	rw	rw	rw	rw

15	14	13	12	11	10	9	8	7	6	5	4	3	2	1	0
DATALENGTH[15:0]															
rw	rw	rw	rw	rw	rw	rw	rw	rw	rw	rw	rw	rw	rw	rw	rw

Bits 31:25 Reserved, must be kept at reset value.

Bits 24:0 **DATALENGTH:** Data length value
Number of data bytes to be transferred.

Note: For a block data transfer, the value in the data length register must be a multiple of the block size (see SDMMC_DCTRL). Before being written to the data control register a timeout must be written to the data timer register and the data length register.

In case of IO_RW_EXTENDED (CMD53):

- If the Stream or SDIO multibyte data transfer is selected the value in the data length register must be between 1 and 512.

*- If the Block data transfer is selected the value in the data length register must be between 1*Data block size and 512*Data block size.*

45.8.9 SDMMC data control register (SDMMC_DCTRL)

Address offset: 0x2C

Reset value: 0x0000 0000

The SDMMC_DCTRL register control the data path state machine (DPSM).

31	30	29	28	27	26	25	24	23	22	21	20	19	18	17	16
Res.	Res.	Res.	Res.	Res.	Res.	Res.	Res.	Res.	Res.	Res.	Res.	Res.	Res.	Res.	Res.

15	14	13	12	11	10	9	8	7	6	5	4	3	2	1	0
Res.	Res.	Res.	Res.	SDIO EN	RW MOD	RW STOP	RW START	DBLOCKSIZE				DMA EN	DT MODE	DTDIR	DTEN
				rw	rw	rw	rw	rw	rw	rw	rw	rw	rw	rw	rw

Bits 31:12 Reserved, must be kept at reset value.

Bit 11 **SDIOEN:** SD I/O enable functions

If this bit is set, the DPSM performs an SD I/O-card-specific operation.

Bit 10 **RWMOD:** Read wait mode

0: Read Wait control stopping SDMMC_D2
1: Read Wait control using SDMMC_CK

Bit 9 **RWSTOP:** Read wait stop

0: Read wait in progress if RWSTART bit is set
1: Enable for read wait stop if RWSTART bit is set

Bit 8 **RWSTART:** Read wait start

If this bit is set, read wait operation starts.

Bits 7:4 **DBLOCKSIZE:** Data block size

Define the data block length when the block data transfer mode is selected:

0000: (0 decimal) lock length = 2^0 = 1 byte
0001: (1 decimal) lock length = 2^1 = 2 bytes
0010: (2 decimal) lock length = 2^2 = 4 bytes
0011: (3 decimal) lock length = 2^3 = 8 bytes
0100: (4 decimal) lock length = 2^4 = 16 bytes
0101: (5 decimal) lock length = 2^5 = 32 bytes
0110: (6 decimal) lock length = 2^6 = 64 bytes
0111: (7 decimal) lock length = 2^7 = 128 bytes
1000: (8 decimal) lock length = 2^8 = 256 bytes
1001: (9 decimal) lock length = 2^9 = 512 bytes
1010: (10 decimal) lock length = 2^{10} = 1024 bytes
1011: (11 decimal) lock length = 2^{11} = 2048 bytes
1100: (12 decimal) lock length = 2^{12} = 4096 bytes
1101: (13 decimal) lock length = 2^{13} = 8192 bytes
1110: (14 decimal) lock length = 2^{14} = 16384 bytes
1111: (15 decimal) reserved

Bit 3 **DMAEN:** DMA enable bit

0: DMA disabled.
1: DMA enabled.

Bit 2 **DTMODE:** Data transfer mode selection 1: Stream or SDIO multibyte data transfer.

0: Block data transfer
1: Stream or SDIO multibyte data transfer

Bit 1 **DTDIR:** Data transfer direction selection

0: From controller to card.
1: From card to controller.

[0] **DTEN:** Data transfer enabled bit

Data transfer starts if 1b is written to the DTEN bit. Depending on the direction bit, DTDIR, the DPSM moves to the Wait_S, Wait_R state or Readwait if RW Start is set immediately at the beginning of the transfer. It is not necessary to clear the enable bit after the end of a data transfer but the SDMMC_DCTRL must be updated to enable a new data transfer

Note: After a data write, data cannot be written to this register for three SDMMCCLK clock periods plus two PCLK2 clock periods.

The meaning of the DTMODE bit changes according to the value of the SDIOEN bit. When SDIOEN=0 and DTMODE=1, the MultiMediaCard stream mode is enabled, and when SDIOEN=1 and DTMODE=1, the peripheral enables an SDIO multibyte transfer.

45.8.10 SDMMC data counter register (SDMMC_DCOUNT)

Address offset: 0x30

Reset value: 0x0000 0000

The SDMMC_DCOUNT register loads the value from the data length register (see SDMMC_DLEN) when the DPSM moves from the Idle state to the Wait_R or Wait_S state. As data is transferred, the counter decrements the value until it reaches 0. The DPSM then moves to the Idle state and the data status end flag, DATAEND, is set.

31	30	29	28	27	26	25	24	23	22	21	20	19	18	17	16
Res.	Res.	Res.	Res.	Res.	Res.	Res.	DATACOUNT[24:16]								
							r	r	r	r	r	r	r	r	r

15	14	13	12	11	10	9	8	7	6	5	4	3	2	1	0
DATACOUNT[15:0]															
r	r	r	r	r	r	r	r	r	r	r	r	r	r	r	r

Bits 31:25 Reserved, must be kept at reset value.

Bits 24:0 **DATACOUNT:** Data count value
When this bit is read, the number of remaining data bytes to be transferred is returned. Write has no effect.

Note: This register should be read only when the data transfer is complete.

45.8.11 SDMMC status register (SDMMC_STA)

Address offset: 0x34

Reset value: 0x0000 0000

The SDMMC_STA register is a read-only register. It contains two types of flag:

- Static flags (bits [23:22,10:0]): these bits remain asserted until they are cleared by writing to the SDMMC Interrupt Clear register (see SDMMC_ICR)
- Dynamic flags (bits [21:11]): these bits change state depending on the state of the underlying logic (for example, FIFO full and empty flags are asserted and deasserted as data while written to the FIFO)

31	30	29	28	27	26	25	24	23	22	21	20	19	18	17	16
Res.	Res.	Res.	Res.	Res.	Res.	Res.	Res.	Res.	SDIOIT	RXD AVL	TXD AVL	RX FIFOE	TX FIFOE	RX FIFOF	TX FIFOF
									r	r	r	r	r	r	r

15	14	13	12	11	10	9	8	7	6	5	4	3	2	1	0
RX FIFO HF	TX FIFO HE	RXACT	TXACT	CMD ACT	DBCK END	Res.	DATA END	CMDS ENT	CMDR END	RX OVERR	TXUND ERR	DTIME OUT	CTIME OUT	DCRC FAIL	CCRC FAIL
r	r	r	r	r	r		r	r	r	r	r	r	r	r	r

Bits 31:23 Reserved, must be kept at reset value.

Bit 22 **SDIOIT:** SDIO interrupt received

Bit 21 **RXDAVL:** Data available in receive FIFO

Bit 20 **TXDAVL:** Data available in transmit FIFO

Bit 19 **RXFIFOE:** Receive FIFO empty

Bit 18 **TXFIFOE:** Transmit FIFO empty

When HW Flow Control is enabled, TXFIFOE signals becomes activated when the FIFO contains 2 words.

Bit 17 **RXFIFOF:** Receive FIFO full

When HW Flow Control is enabled, RXFIFOF signals becomes activated 2 words before the FIFO is full.

Bit 16 **TXFIFOF:** Transmit FIFO full

Bit 15 **RXFIFOHF:** Receive FIFO half full: there are at least 8 words in the FIFO

Bit 14 **TXFIFOHE:** Transmit FIFO half empty: at least 8 words can be written into the FIFO

Bit 13 **RXACT:** Data receive in progress

Bit 12 **TXACT:** Data transmit in progress

Bit 11 **CMDACT:** Command transfer in progress

Bit 10 **DBCKEND:** Data block sent/received (CRC check passed)

Bit 9 Reserved, must be kept at reset value.

Bit 8 **DATAEND:** Data end (data counter, SDIDCOUNT, is zero)

Bit 7 **CMDSENT:** Command sent (no response required)

Bit 6 **CMDREND:** Command response received (CRC check passed)

Bit 5 **RXOVERR:** Received FIFO overrun error

Note: If DMA is used to read SDMMC FIFO (DMAEN bit is set in SDMMC_DCTRL register), user software should disable DMA stream, and then write with '0' (to disable DMA request generation).

Bit 4 **TXUNDERR:** Transmit FIFO underrun error

Note: If DMA is used to fill SDMMC FIFO (DMAEN bit is set in SDMMC_DCTRL register), user software should disable DMA stream, and then write DMAEN with '0' (to disable DMA request generation).

Bit 3 **DTIMEOUT:** Data timeout

Bit 2 **CTIMEOUT:** Command response timeout

The Command TimeOut period has a fixed value of 64 SDMMC_CK clock periods.

Bit 1 **DCRCFAIL:** Data block sent/received (CRC check failed)

Bit 0 **CCRCFAIL:** Command response received (CRC check failed)

45.8.12 SDMMC interrupt clear register (SDMMC_ICR)

Address offset: 0x38

Reset value: 0x0000 0000

The SDMMC_ICR register is a write-only register. Writing a bit with 1b clears the corresponding bit in the SDMMC_STA Status register.

31	30	29	28	27	26	25	24	23	22	21	20	19	18	17	16
Res.	Res.	Res.	Res.	Res.	Res.	Res.	Res.	Res.	SDIO ITC	Res.	Res.	Res.	Res.	Res.	Res.
									rw						
15	14	13	12	11	10	9	8	7	6	5	4	3	2	1	0
Res.	Res.	Res.	Res.	Res.	DBCK ENDC	Res.	DATA ENDC	CMD SENTC	CMD REND C	RX OVERR C	TX UNDERR C	DTIME OUTC	CTIME OUTC	DCRC FAILC	CCRC FAILC
					rw		rw	rw	rw	rw	rw	rw	rw	rw	rw

Bits 31:23 Reserved, must be kept at reset value.

Bit 22 **SDIOITC:** SDIOIT flag clear bit
Set by software to clear the SDIOIT flag.
0: SDIOIT not cleared
1: SDIOIT cleared

Bits 21:11 Reserved, must be kept at reset value.

Bit 10 **DBCKENDC:** DBCKEND flag clear bit
Set by software to clear the DBCKEND flag.
0: DBCKEND not cleared
1: DBCKEND cleared

Bit 9 Reserved, must be kept at reset value.

Bit 8 **DATAENDC:** DATAEND flag clear bit
Set by software to clear the DATAEND flag.
0: DATAEND not cleared
1: DATAEND cleared

Bit 7 **CMDSENTC:** CMDSENT flag clear bit
Set by software to clear the CMDSENT flag.
0: CMDSENT not cleared
1: CMDSENT cleared

Bit 6 **CMDRENDC:** CMDREND flag clear bit
Set by software to clear the CMDREND flag.
0: CMDREND not cleared
1: CMDREND cleared

Bit 5 **RXOVERRC:** RXOVERR flag clear bit
Set by software to clear the RXOVERR flag.
0: RXOVERR not cleared
1: RXOVERR cleared

Bit 4 **TXUNDERRC:** TXUNDERR flag clear bit
Set by software to clear TXUNDERR flag.
0: TXUNDERR not cleared
1: TXUNDERR cleared

Bit 3 **DTIMEOUTC:** DTIMEOUT flag clear bit
Set by software to clear the DTIMEOUT flag.
0: DTIMEOUT not cleared
1: DTIMEOUT cleared

Bit 2 **CTIMEOUTC:** CTIMEOUT flag clear bit
Set by software to clear the CTIMEOUT flag.
0: CTIMEOUT not cleared
1: CTIMEOUT cleared

Bit 1 **DCRCFAILC:** DCRCFAIL flag clear bit
Set by software to clear the DCRCFAIL flag.
0: DCRCFAIL not cleared
1: DCRCFAIL cleared

Bit 0 **CCRCFAILC:** CCRCFAIL flag clear bit
Set by software to clear the CCRCFAIL flag.
0: CCRCFAIL not cleared
1: CCRCFAIL cleared

45.8.13 SDMMC mask register (SDMMC_MASK)

Address offset: 0x3C

Reset value: 0x0000 0000

The interrupt mask register determines which status flags generate an interrupt request by setting the corresponding bit to 1b.

31	30	29	28	27	26	25	24	23	22	21	20	19	18	17	16
Res.	Res.	Res.	Res.	Res.	Res.	Res.	Res.	Res.	SDIO ITIE	RXD AVLIE	TXD AVLIE	RX FIFO EIE	TX FIFO EIE	RX FIFO FIE	TX FIFO FIE
									rw	rw	rw	rw	rw	rw	rw

15	14	13	12	11	10	9	8	7	6	5	4	3	2	1	0
RX FIFO HFIE	TX FIFO HEIE	RX ACTIE	TX ACTIE	CMD ACTIE	DBCK ENDIE	Res.	DATA ENDIE	CMD SENT IE	CMD REND IE	RX OVERR IE	TX UNDERR IE	DTIME OUTIE	CTIME OUTIE	DCRC FAILIE	CCRC FAILIE
rw	rw	rw	rw	rw	rw		rw	rw	rw	rw	rw	rw	rw	rw	rw

Bits 31:23 Reserved, must be kept at reset value.

Bit 22 **SDIOITIE:** SDIO mode interrupt received interrupt enable
Set and cleared by software to enable/disable the interrupt generated when receiving the SDIO mode interrupt.
0: SDIO Mode Interrupt Received interrupt disabled
1: SDIO Mode Interrupt Received interrupt enabled

Bit 21 **RXDAVLIE:** Data available in Rx FIFO interrupt enable
Set and cleared by software to enable/disable the interrupt generated by the presence of data available in Rx FIFO.
0: Data available in Rx FIFO interrupt disabled
1: Data available in Rx FIFO interrupt enabled

Bit 20 **TXDAVLIE:** Data available in Tx FIFO interrupt enable
Set and cleared by software to enable/disable the interrupt generated by the presence of data available in Tx FIFO.
0: Data available in Tx FIFO interrupt disabled
1: Data available in Tx FIFO interrupt enabled

Bit 19 **RXFIFOEIE:** Rx FIFO empty interrupt enable
Set and cleared by software to enable/disable interrupt caused by Rx FIFO empty.
0: Rx FIFO empty interrupt disabled
1: Rx FIFO empty interrupt enabled

Bit 18 **TXFIFOEIE:** Tx FIFO empty interrupt enable
Set and cleared by software to enable/disable interrupt caused by Tx FIFO empty.
0: Tx FIFO empty interrupt disabled
1: Tx FIFO empty interrupt enabled

Bit 17 **RXFIFOFIE:** Rx FIFO full interrupt enable
Set and cleared by software to enable/disable interrupt caused by Rx FIFO full.
0: Rx FIFO full interrupt disabled
1: Rx FIFO full interrupt enabled

Bit 16 **TXFIFOFIE:** Tx FIFO full interrupt enable
Set and cleared by software to enable/disable interrupt caused by Tx FIFO full.
0: Tx FIFO full interrupt disabled
1: Tx FIFO full interrupt enabled

Bit 15 **RXFIFOHFIE:** Rx FIFO half full interrupt enable
Set and cleared by software to enable/disable interrupt caused by Rx FIFO half full.
0: Rx FIFO half full interrupt disabled
1: Rx FIFO half full interrupt enabled

Bit 14 **TXFIFOHEIE:** Tx FIFO half empty interrupt enable
Set and cleared by software to enable/disable interrupt caused by Tx FIFO half empty.
0: Tx FIFO half empty interrupt disabled
1: Tx FIFO half empty interrupt enabled

Bit 13 **RXACTIE:** Data receive acting interrupt enable
Set and cleared by software to enable/disable interrupt caused by data being received (data receive acting).
0: Data receive acting interrupt disabled
1: Data receive acting interrupt enabled

Bit 12 **TXACTIE:** Data transmit acting interrupt enable
Set and cleared by software to enable/disable interrupt caused by data being transferred (data transmit acting).
0: Data transmit acting interrupt disabled
1: Data transmit acting interrupt enabled

Bit 11 **CMDACTIE:** Command acting interrupt enable
Set and cleared by software to enable/disable interrupt caused by a command being transferred (command acting).
0: Command acting interrupt disabled
1: Command acting interrupt enabled

Bit 10 **DBCKENDIE:** Data block end interrupt enable
Set and cleared by software to enable/disable interrupt caused by data block end.
0: Data block end interrupt disabled
1: Data block end interrupt enabled

Bit 9 Reserved, must be kept at reset value.

Bit 8 **DATAENDIE:** Data end interrupt enable
Set and cleared by software to enable/disable interrupt caused by data end.
0: Data end interrupt disabled
1: Data end interrupt enabled

Bit 7 **CMDSENTIE:** Command sent interrupt enable
Set and cleared by software to enable/disable interrupt caused by sending command.
0: Command sent interrupt disabled
1: Command sent interrupt enabled

Bit 6 **CMDRENDIE:** Command response received interrupt enable
Set and cleared by software to enable/disable interrupt caused by receiving command response.
0: Command response received interrupt disabled
1: command Response Received interrupt enabled

Bit 5 **RXOVERRIE:** Rx FIFO overrun error interrupt enable
Set and cleared by software to enable/disable interrupt caused by Rx FIFO overrun error.
0: Rx FIFO overrun error interrupt disabled
1: Rx FIFO overrun error interrupt enabled

Bit 4 **TXUNDERRIE:** Tx FIFO underrun error interrupt enable
Set and cleared by software to enable/disable interrupt caused by Tx FIFO underrun error.
0: Tx FIFO underrun error interrupt disabled
1: Tx FIFO underrun error interrupt enabled

Bit 3 **DTIMEOUTIE:** Data timeout interrupt enable
Set and cleared by software to enable/disable interrupt caused by data timeout.
0: Data timeout interrupt disabled
1: Data timeout interrupt enabled

Bit 2 **CTIMEOUTIE:** Command timeout interrupt enable
Set and cleared by software to enable/disable interrupt caused by command timeout.
0: Command timeout interrupt disabled
1: Command timeout interrupt enabled

Bit 1 **DCRCFAILIE:** Data CRC fail interrupt enable
Set and cleared by software to enable/disable interrupt caused by data CRC failure.
0: Data CRC fail interrupt disabled
1: Data CRC fail interrupt enabled

Bit 0 **CCRCFAILIE:** Command CRC fail interrupt enable
Set and cleared by software to enable/disable interrupt caused by command CRC failure.
0: Command CRC fail interrupt disabled
1: Command CRC fail interrupt enabled

45.8.14 SDMMC FIFO counter register (SDMMC_FIFOCNT)

Address offset: 0x48

Reset value: 0x0000 0000

The SDMMC_FIFOCNT register contains the remaining number of words to be written to or read from the FIFO. The FIFO counter loads the value from the data length register (see SDMMC_DLEN) when the data transfer enable bit, DTEN, is set in the data control register (SDMMC_DCTRL register) and the DPSM is at the Idle state. If the data length is not word-aligned (multiple of 4), the remaining 1 to 3 bytes are regarded as a word.

31	30	29	28	27	26	25	24	23	22	21	20	19	18	17	16
Res.	Res.	Res.	Res.	Res.	Res.	Res.	Res.	FIFOCOUNT[23:16]							
								r	r	r	r	r	r	r	r
15	14	13	12	11	10	9	8	7	6	5	4	3	2	1	0
FIFOCOUNT[15:0]															
r	r	r	r	r	r	r	r	r	r	r	r	r	r	r	r

Bits 31:24 Reserved, must be kept at reset value.

Bits 23:0 **FIFOCOUNT:** Remaining number of words to be written to or read from the FIFO.

45.8.15 SDMMC data FIFO register (SDMMC_FIFO)

Address offset: 0x80

Reset value: 0x0000 0000

The receive and transmit FIFOs can be read or written as 32-bit wide registers. The FIFOs contain 32 entries on 32 sequential addresses. This allows the CPU to use its load and store multiple operands to read from/write to the FIFO.

31	30	29	28	27	26	25	24	23	22	21	20	19	18	17	16
FIF0Data[31:16]															
rw	rw	rw	rw	rw	rw	rw	rw	rw	rw	rw	rw	rw	rw	rw	rw
15	14	13	12	11	10	9	8	7	6	5	4	3	2	1	0
FIF0Data[15:0]															
rw	rw	rw	rw	rw	rw	rw	rw	rw	rw	rw	rw	rw	rw	rw	rw

bits 31:0 **FIFOData:** Receive and transmit FIFO data

The FIFO data occupies 32 entries of 32-bit words, from address:
SDMMC base + 0x080 to SDMMC base + 0xFC.

45.8.16 SDMMC register map

The following table summarizes the SDMMC registers.

Table 311. SDMMC register map

Offset	Register	31	30	29	28	27	26	25	24	23	22	21	20	19	18	17	16	15	14	13	12	11	10	9	8	7	6	5	4	3	2	1	0
0x00	**SDMMC_ POWER**	Res.	Res.	Res.	Res.	Res.	Res.	Res.	Res.	Res.	Res.	Res.	Res.	Res.	Res.	Res.	Res.	Res.	Res.	Res.	Res.	Res.	Res.	Res.	Res.	Res.	Res.	Res.	Res.	Res.	Res.	PWRCTRL	
	Reset value																															0	0
0x04	**SDMMC_ CLKCR**	Res.	Res.	Res.	Res.	Res.	Res.	Res.	Res.	Res.	Res.	Res.	Res.	Res.	Res.	Res.	Res.	Res.	HWFC_EN	NEGEDGE	WIDBUS		BYPASS	PWRSAV	CLKEN	CLKDIV							
	Reset value																		0	0	0	0	0	0	0	0	0	0	0	0	0	0	0
0x08	**SDMMC_ARG**	CMDARG																															
	Reset value	0	0	0	0	0	0	0	0	0	0	0	0	0	0	0	0	0	0	0	0	0	0	0	0	0	0	0	0	0	0	0	0
0x0C	**SDMMC_CMD**	Res.	Res.	Res.	Res.	Res.	Res.	Res.	Res.	Res.	Res.	Res.	Res.	Res.	Res.	Res.	Res.	Res.	Res.	Res.	Res.	SDIOSuspend	CPSMEN	WAITPEND	WAITINT	WAITRESP		CMDINDEX					
	Reset value																					0	0	0	0	0	0	0	0	0	0	0	0
0x10	**SDMMC_ RESPCMD**	Res.	Res.	Res.	Res.	Res.	Res.	Res.	Res.	Res.	Res.	Res.	Res.	Res.	Res.	Res.	Res.	Res.	Res.	Res.	Res.	Res.	Res.	Res.	Res.	Res.	Res.	RESPCMD					
	Reset value																											0	0	0	0	0	0
0x14	**SDMMC_ RESP1**	CARDSTATUS1																															
	Reset value	0	0	0	0	0	0	0	0	0	0	0	0	0	0	0	0	0	0	0	0	0	0	0	0	0	0	0	0	0	0	0	0
0x18	**SDMMC_ RESP2**	CARDSTATUS2																															
	Reset value	0	0	0	0	0	0	0	0	0	0	0	0	0	0	0	0	0	0	0	0	0	0	0	0	0	0	0	0	0	0	0	0
0x1C	**SDMMC_ RESP3**	CARDSTATUS3																															
	Reset value	0	0	0	0	0	0	0	0	0	0	0	0	0	0	0	0	0	0	0	0	0	0	0	0	0	0	0	0	0	0	0	0
0x20	**SDMMC_ RESP4**	CARDSTATUS4																															
	Reset value	0	0	0	0	0	0	0	0	0	0	0	0	0	0	0	0	0	0	0	0	0	0	0	0	0	0	0	0	0	0	0	0
0x24	**SDMMC_ DTIMER**	DATATIME																															
	Reset value	0	0	0	0	0	0	0	0	0	0	0	0	0	0	0	0	0	0	0	0	0	0	0	0	0	0	0	0	0	0	0	0
0x28	**SDMMC_ DLEN**	Res.	Res.	Res.	Res.	Res.	Res.	Res.	DATALENGTH																								
	Reset value								0	0	0	0	0	0	0	0	0	0	0	0	0	0	0	0	0	0	0	0	0	0	0	0	0
0x2C	**SDMMC_ DCTRL**	Res.	Res.	Res.	Res.	Res.	Res.	Res.	Res.	Res.	Res.	Res.	Res.	Res.	Res.	Res.	Res.	Res.	Res.	Res.	Res.	SDIOEN	RWMOD	RWSTOP	RWSTART	DBLOCKSIZE				DMAEN	DTMODE	DTDIR	DTEN
	Reset value																					0	0	0	0	0	0	0	0	0	0	0	0

Table 311. SDMMC register map (continued)

Offset	Register	31	30	29	28	27	26	25	24	23	22	21	20	19	18	17	16	15	14	13	12	11	10	9	8	7	6	5	4	3	2	1	0
0x30	SDMMC_ DCOUNT	Res.	Res.	Res.	Res.	Res.	Res.	Res.	DATACOUNT																								
	Reset value								0	0	0	0	0	0	0	0	0	0	0	0	0	0	0	0	0	0	0	0	0	0	0	0	0
0x34	SDMMC_STA	Res.	Res.	Res.	Res.	Res.	Res.	Res.	Res.	Res.	SDIOIT	RXDAVL	TXDAVL	RXFIFOE	TXFIFOE	RXFIFOF	TXFIFOF	RXFIFOHF	TXFIFOHE	RXACT	TXACT	CMDACT	DBCKEND	Res.	DATAEND	CMDSENT	CMDREND	RXOVERR	TXUNDERR	DTIMEOUT	CTIMEOUT	DCRCFAIL	CCRCFAIL
	Reset value										0	0	0	0	0	0	0	0	0	0	0	0	0		0	0	0	0	0	0	0	0	0
0x38	SDMMC_ICR	Res.	Res.	Res.	Res.	Res	Res.	Res.	Res.	Res.	SDIOITC	Res.	Res.	Res.	Res.	Res.	Res.	Res.	Res.	Res.	Res.	Res.	DBCKENDC	Res.	DATAENDC	CMDSENTC	CMDRENDC	RXOVERRC	TXUNDERRC	DTIMEOUTC	CTIMEOUTC	DCRCFAILC	CCRCFAILC
	Reset value										0												0		0	0	0	0	0	0	0	0	0
0x3C	SDMMC_ MASK	Res.	Res.	Res.	Res.	Res	Res.	Res.	Res.	Res.	SDIOITIE	RXDAVLIE	TXDAVLIE	RXFIFOEIE	TXFIFOEIE	RXFIFOFIE	TXFIFOFIE	RXFIFOHFIE	TXFIFOHEIE	RXACTIE	TXACTIE	CMDACTIE	DBCKENDIE	Res.	DATAENDIE	CMDSENTIE	CMDRENDIE	RXOVERRIE	TXUNDERRIE	DTIMEOUTIE	CTIMEOUTIE	DCRCFAILIE	CCRCFAILIE
	Reset value										0	0	0	0	0	0	0	0	0	0	0	0	0		0	0	0	0	0	0	0	0	0
0x48	SDMMC_ FIFOCNT	Res.	Res.	Res.	Res.	Res.	Res.	Res.	Res.	FIFOCOUNT																							
	Reset value									0	0	0	0	0	0	0	0	0	0	0	0	0	0	0	0	0	0	0	0	0	0	0	0
0x80	SDMMC_FIFO	FIF0Data																															
	Reset value	0	0	0	0	0	0	0	0	0	0	0	0	0	0	0	0	0	0	0	0	0	0	0	0	0	0	0	0	0	0	0	0

Refer to *Section 2.2 on page 75* for the register boundary addresses.

46 Controller area network (bxCAN)

46.1 Introduction

The **Basic Extended CAN** peripheral, named **bxCAN**, interfaces the CAN network. It supports the CAN protocols version 2.0A and B. It has been designed to manage a high number of incoming messages efficiently with a minimum CPU load. It also meets the priority requirements for transmit messages.

For safety-critical applications, the CAN controller provides all hardware functions for supporting the CAN Time Triggered Communication option.

46.2 bxCAN main features

- Supports CAN protocol version 2.0 A, B Active
- Bit rates up to 1 Mbit/s
- Supports the Time Triggered Communication option

Transmission

- Three transmit mailboxes
- Configurable transmit priority
- Time Stamp on SOF transmission

Reception

- Two receive FIFOs with three stages
- Scalable filter banks:
  - 28 filter banks shared between CAN1 and CAN2 for dual CAN
  - 14 filter banks for single CAN
- Identifier list feature
- Configurable FIFO overrun
- Time Stamp on SOF reception

Time-triggered communication option

- Disable automatic retransmission mode
- 16-bit free running timer
- Time Stamp sent in last two data bytes

Management

- Maskable interrupts
- Software-efficient mailbox mapping at a unique address space

Dual CAN peripheral configuration

- CAN1: Master bxCAN for managing the communication between a Slave bxCAN and the 512-byte SRAM memory
- CAN2: Slave bxCAN, with no direct access to the SRAM memory.
- The two bxCAN cells share the 512-byte SRAM memory (see *Figure 514: Dual-CAN block diagram*)

See *Table 312*.

Table 312. CAN implementation

CAN feature	STM32L47x/L48x	STM32L49x/L4Ax
Configuration	Single CAN	Dual CAN

46.3 bxCAN general description

In today CAN applications, the number of nodes in a network is increasing and often several networks are linked together via gateways. Typically the number of messages in the system (to be handled by each node) has significantly increased. In addition to the application messages, Network Management and Diagnostic messages have been introduced.

- An enhanced filtering mechanism is required to handle each type of message.

Furthermore, application tasks require more CPU time, therefore real-time constraints caused by message reception have to be reduced.

- A receive FIFO scheme allows the CPU to be dedicated to application tasks for a long time period without losing messages.

The standard HLP (Higher Layer Protocol) based on standard CAN drivers requires an efficient interface to the CAN controller.

Figure 513. CAN network topology

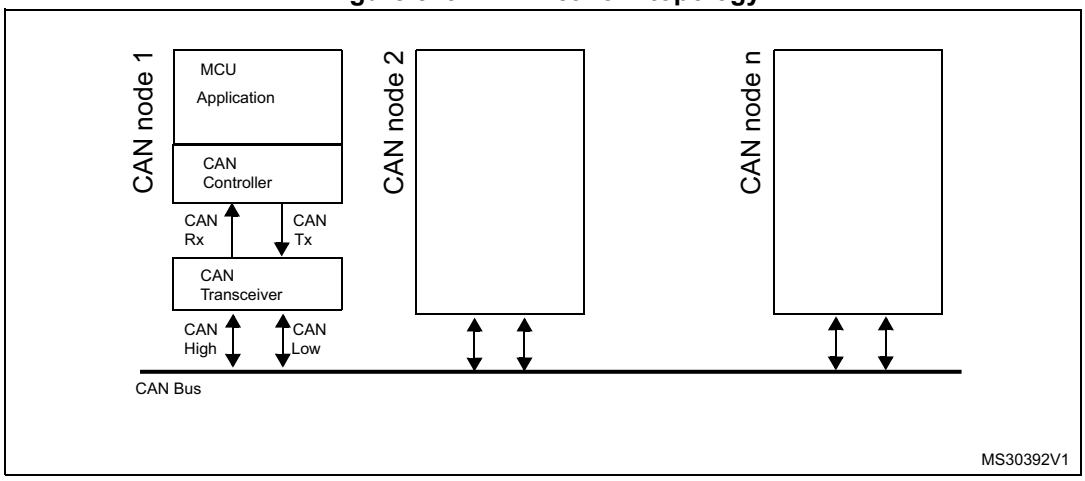

46.3.1 CAN 2.0B active core

The bxCAN module handles the transmission and the reception of CAN messages fully autonomously. Standard identifiers (11-bit) and extended identifiers (29-bit) are fully supported by hardware.

46.3.2 Control, status and configuration registers

The application uses these registers to:

- Configure CAN parameters, e.g. baud rate
- Request transmissions
- Handle receptions
- Manage interrupts
- Get diagnostic information

46.3.3 Tx mailboxes

Three transmit mailboxes are provided to the software for setting up messages. The transmission Scheduler decides which mailbox has to be transmitted first.

46.3.4 Acceptance filters

The bxCAN provides up to 28 scalable/configurable identifier filter banks in dual CAN configuration or up to 14 scalable/configurable identifier filter banks in single CAN configuration, for selecting the incoming messages, that the software needs and discarding the others.

Receive FIFO

Two receive FIFOs are used by hardware to store the incoming messages. Three complete messages can be stored in each FIFO. The FIFOs are managed completely by hardware.

Figure 514. Dual-CAN block diagram

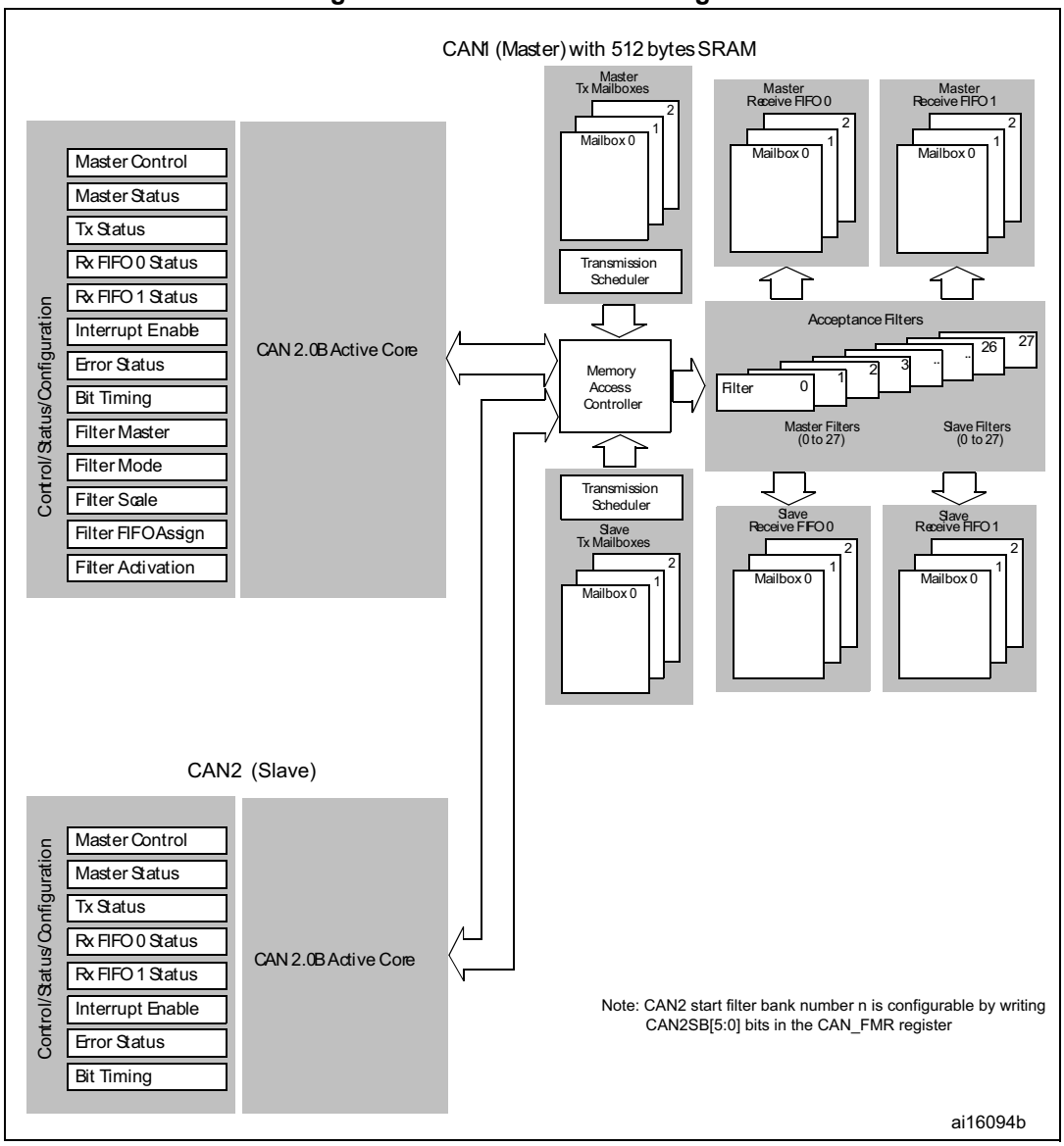

Figure 515. Single-CAN block diagram

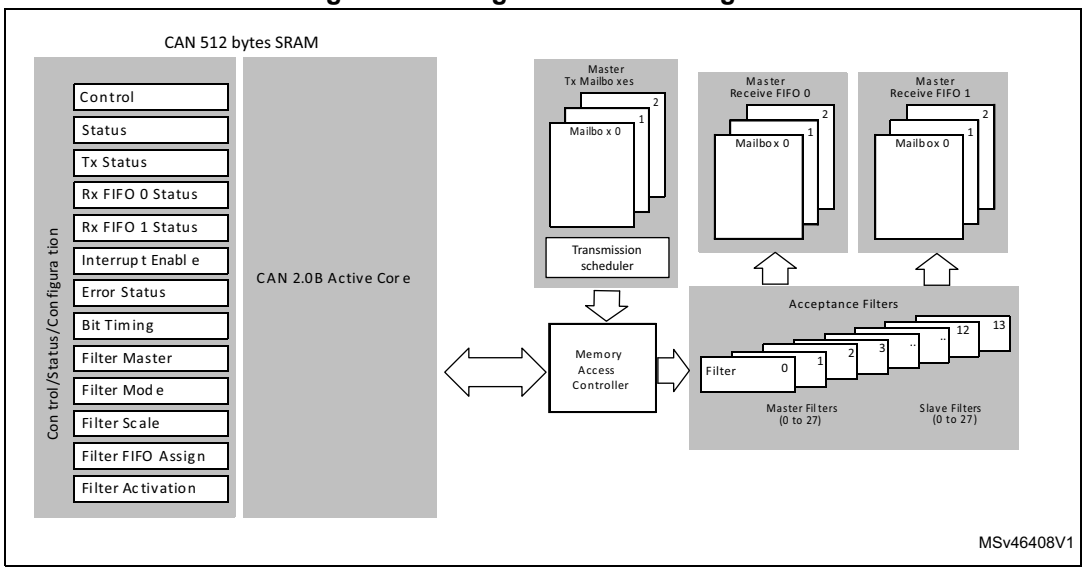

46.4 bxCAN operating modes

bxCAN has three main operating modes: **initialization**, **normal** and **Sleep**. After a hardware reset, bxCAN is in Sleep mode to reduce power consumption and an internal pull-up is active on CANTX. The software requests bxCAN to enter **initialization** or **Sleep** mode by setting the INRQ or SLEEP bits in the CAN_MCR register. Once the mode has been entered, bxCAN confirms it by setting the INAK or SLAK bits in the CAN_MSR register and the internal pull-up is disabled. When neither INAK nor SLAK are set, bxCAN is in **normal** mode. Before entering **normal** mode bxCAN always has to **synchronize** on the CAN bus. To synchronize, bxCAN waits until the CAN bus is idle, this means 11 consecutive recessive bits have been monitored on CANRX.

46.4.1 Initialization mode

The software initialization can be done while the hardware is in Initialization mode. To enter this mode the software sets the INRQ bit in the CAN_MCR register and waits until the hardware has confirmed the request by setting the INAK bit in the CAN_MSR register.

To leave Initialization mode, the software clears the INQR bit. bxCAN has left Initialization mode once the INAK bit has been cleared by hardware.

While in Initialization Mode, all message transfers to and from the CAN bus are stopped and the status of the CAN bus output CANTX is recessive (high).

Entering Initialization Mode does not change any of the configuration registers.

To initialize the CAN Controller, software has to set up the Bit Timing (CAN_BTR) and CAN options (CAN_MCR) registers.

To initialize the registers associated with the CAN filter banks (mode, scale, FIFO assignment, activation and filter values), software has to set the FINIT bit (CAN_FMR). Filter initialization also can be done outside the initialization mode.

Note: When FINIT=1, CAN reception is deactivated.

The filter values also can be modified by deactivating the associated filter activation bits (in the CAN_FA1R register).

If a filter bank is not used, it is recommended to leave it non active (leave the corresponding FACT bit cleared).

46.4.2 Normal mode

Once the initialization is complete, the software must request the hardware to enter Normal mode to be able to synchronize on the CAN bus and start reception and transmission.

The request to enter Normal mode is issued by clearing the INRQ bit in the CAN_MCR register. The bxCAN enters Normal mode and is ready to take part in bus activities when it has synchronized with the data transfer on the CAN bus. This is done by waiting for the occurrence of a sequence of 11 consecutive recessive bits (Bus Idle state). The switch to Normal mode is confirmed by the hardware by clearing the INAK bit in the CAN_MSR register.

The initialization of the filter values is independent from Initialization Mode but must be done while the filter is not active (corresponding FACTx bit cleared). The filter scale and mode configuration must be configured before entering Normal Mode.

46.4.3 Sleep mode (low-power)

To reduce power consumption, bxCAN has a low-power mode called Sleep mode. This mode is entered on software request by setting the SLEEP bit in the CAN_MCR register. In this mode, the bxCAN clock is stopped, however software can still access the bxCAN mailboxes.

If software requests entry to **initialization** mode by setting the INRQ bit while bxCAN is in **Sleep** mode, it must also clear the SLEEP bit.

bxCAN can be woken up (exit Sleep mode) either by software clearing the SLEEP bit or on detection of CAN bus activity.

On CAN bus activity detection, hardware automatically performs the wakeup sequence by clearing the SLEEP bit if the AWUM bit in the CAN_MCR register is set. If the AWUM bit is cleared, software has to clear the SLEEP bit when a wakeup interrupt occurs, in order to exit from Sleep mode.

Note: If the wakeup interrupt is enabled (WKUIE bit set in CAN_IER register) a wakeup interrupt will be generated on detection of CAN bus activity, even if the bxCAN automatically performs the wakeup sequence.

After the SLEEP bit has been cleared, Sleep mode is exited once bxCAN has synchronized with the CAN bus, refer to *Figure 516: bxCAN operating modes*. The Sleep mode is exited once the SLAK bit has been cleared by hardware.

Figure 516. bxCAN operating modes

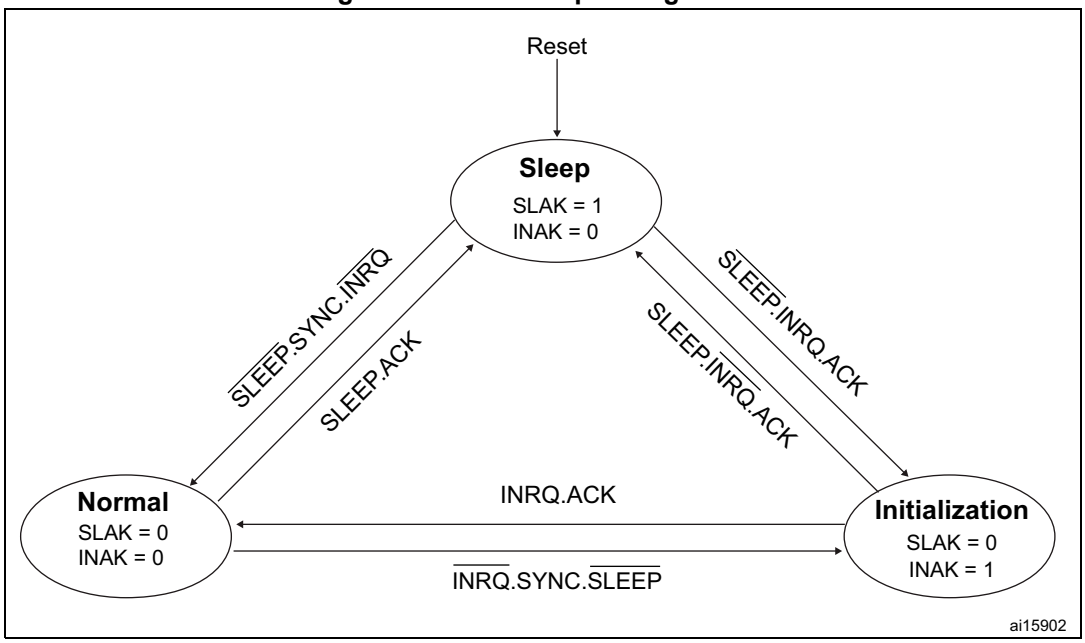

1. ACK = The wait state during which hardware confirms a request by setting the INAK or SLAK bits in the CAN_MSR register
2. SYNC = The state during which bxCAN waits until the CAN bus is idle, meaning 11 consecutive recessive bits have been monitored on CANRX

46.5 Test mode

Test mode can be selected by the SILM and LBKM bits in the CAN_BTR register. These bits must be configured while bxCAN is in Initialization mode. Once test mode has been selected, the INRQ bit in the CAN_MCR register must be reset to enter Normal mode.

46.5.1 Silent mode

The bxCAN can be put in Silent mode by setting the SILM bit in the CAN_BTR register.

In Silent mode, the bxCAN is able to receive valid data frames and valid remote frames, but it sends only recessive bits on the CAN bus and it cannot start a transmission. If the bxCAN has to send a dominant bit (ACK bit, overload flag, active error flag), the bit is rerouted internally so that the CAN Core monitors this dominant bit, although the CAN bus may remain in recessive state. Silent mode can be used to analyze the traffic on a CAN bus without affecting it by the transmission of dominant bits (Acknowledge Bits, Error Frames).

Figure 517. bxCAN in silent mode

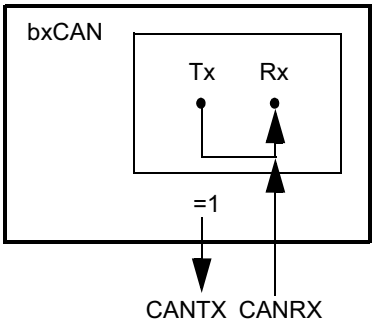

46.5.2 Loop back mode

The bxCAN can be set in Loop Back Mode by setting the LBKM bit in the CAN_BTR register. In Loop Back Mode, the bxCAN treats its own transmitted messages as received messages and stores them (if they pass acceptance filtering) in a Receive mailbox.

Figure 518. bxCAN in loop back mode

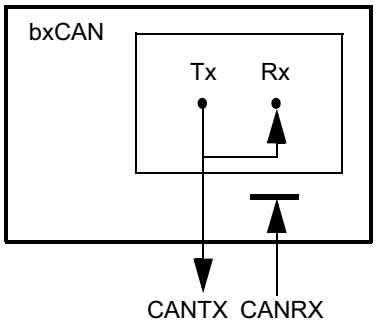

This mode is provided for self-test functions. To be independent of external events, the CAN Core ignores acknowledge errors (no dominant bit sampled in the acknowledge slot of a data / remote frame) in Loop Back Mode. In this mode, the bxCAN performs an internal feedback from its Tx output to its Rx input. The actual value of the CANRX input pin is disregarded by the bxCAN. The transmitted messages can be monitored on the CANTX pin.

46.5.3 Loop back combined with silent mode

It is also possible to combine Loop Back mode and Silent mode by setting the LBKM and SILM bits in the CAN_BTR register. This mode can be used for a “Hot Selftest”, meaning the bxCAN can be tested like in Loop Back mode but without affecting a running CAN system connected to the CANTX and CANRX pins. In this mode, the CANRX pin is disconnected from the bxCAN and the CANTX pin is held recessive.

Figure 519. bxCAN in combined mode

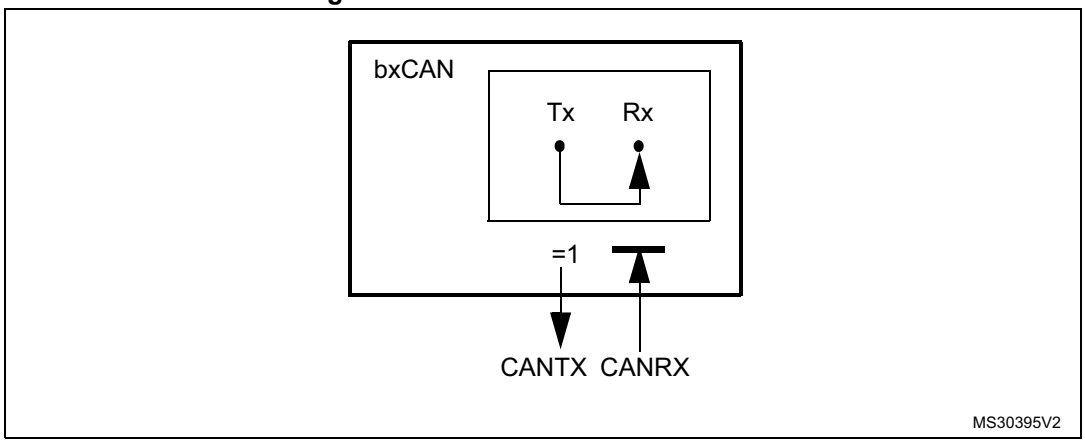

46.6 Behavior in debug mode

When the microcontroller enters the debug mode (Cortex®-M4 core halted), the bxCAN continues to work normally or stops, depending on:

- the DBG_CAN1_STOP bit for CAN1 or the DBG_CAN2_STOP bit for CAN2 in the DBG module for the dual mode.
- the DBG_CAN1_STOP bit in the DBG module for the single mode.
- the DBF bit in CAN_MCR. For more details, refer to *Section 46.9.2: CAN control and status registers*.

46.7 bxCAN functional description

46.7.1 Transmission handling

In order to transmit a message, the application must select one **empty** transmit mailbox, set up the identifier, the data length code (DLC) and the data before requesting the transmission by setting the corresponding TXRQ bit in the CAN_TIxR register. Once the mailbox has left **empty** state, the software no longer has write access to the mailbox registers. Immediately after the TXRQ bit has been set, the mailbox enters **pending** state and waits to become the highest priority mailbox, see *Transmit Priority*. As soon as the mailbox has the highest priority it will be **scheduled** for transmission. The transmission of the message of the scheduled mailbox will start (enter **transmit** state) when the CAN bus becomes idle. Once the mailbox has been successfully transmitted, it will become **empty** again. The hardware indicates a successful transmission by setting the RQCP and TXOK bits in the CAN_TSR register.

If the transmission fails, the cause is indicated by the ALST bit in the CAN_TSR register in case of an Arbitration Lost, and/or the TERR bit, in case of transmission error detection.

Transmit priority

By identifier

When more than one transmit mailbox is pending, the transmission order is given by the identifier of the message stored in the mailbox. The message with the lowest identifier value

has the highest priority according to the arbitration of the CAN protocol. If the identifier values are equal, the lower mailbox number will be scheduled first.

By transmit request order

The transmit mailboxes can be configured as a transmit FIFO by setting the TXFP bit in the CAN_MCR register. In this mode the priority order is given by the transmit request order.

This mode is very useful for segmented transmission.

Abort

A transmission request can be aborted by the user setting the ABRQ bit in the CAN_TSR register. In **pending** or **scheduled** state, the mailbox is aborted immediately. An abort request while the mailbox is in **transmit** state can have two results. If the mailbox is transmitted successfully the mailbox becomes **empty** with the TXOK bit set in the CAN_TSR register. If the transmission fails, the mailbox becomes **scheduled,** the transmission is aborted and becomes **empty** with TXOK cleared. In all cases the mailbox will become **empty** again at least at the end of the current transmission.

Non automatic retransmission mode

This mode has been implemented in order to fulfill the requirement of the Time Triggered Communication option of the CAN standard. To configure the hardware in this mode the NART bit in the CAN_MCR register must be set.

In this mode, each transmission is started only once. If the first attempt fails, due to an arbitration loss or an error, the hardware will not automatically restart the message transmission.

At the end of the first transmission attempt, the hardware considers the request as completed and sets the RQCP bit in the CAN_TSR register. The result of the transmission is indicated in the CAN_TSR register by the TXOK, ALST and TERR bits.

Figure 520. Transmit mailbox states

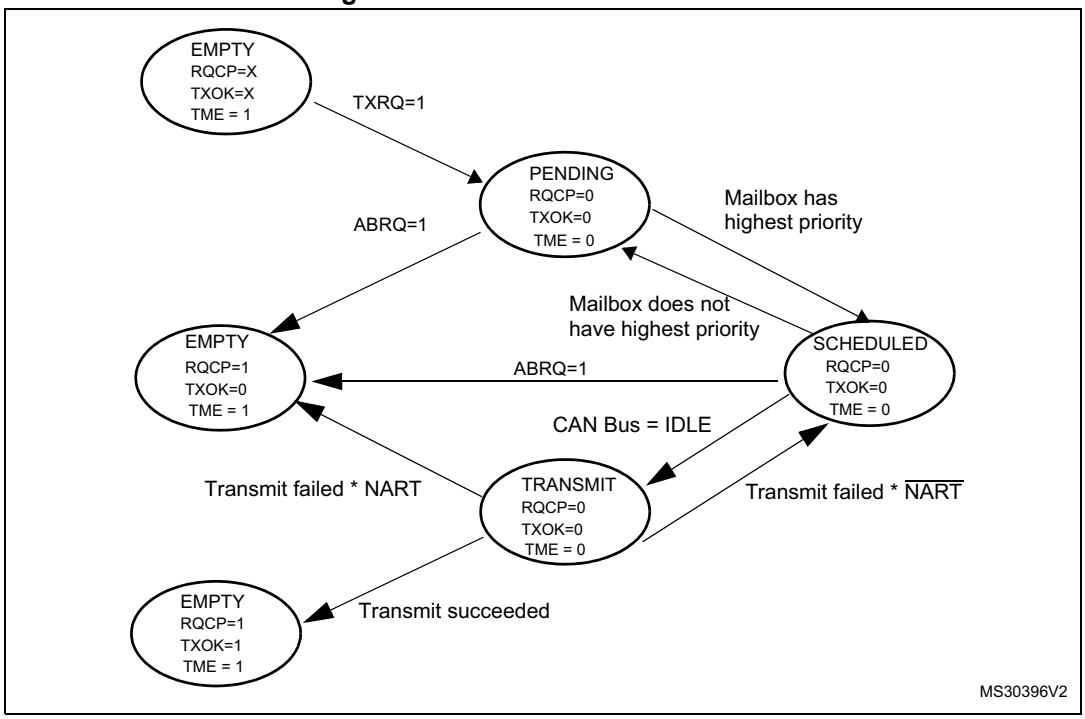

46.7.2 Time triggered communication mode

In this mode, the internal counter of the CAN hardware is activated and used to generate the Time Stamp value stored in the CAN_RDTxR/CAN_TDTxR registers, respectively (for Rx and Tx mailboxes). The internal counter is incremented each CAN bit time (refer to *Section 46.7.7: Bit timing*). The internal counter is captured on the sample point of the Start Of Frame bit in both reception and transmission.

46.7.3 Reception handling

For the reception of CAN messages, three mailboxes organized as a FIFO are provided. In order to save CPU load, simplify the software and guarantee data consistency, the FIFO is managed completely by hardware. The application accesses the messages stored in the FIFO through the FIFO output mailbox.

Valid message

A received message is considered as valid **when** it has been received correctly according to the CAN protocol (no error until the last but one bit of the EOF field) **and** It passed through the identifier filtering successfully, see *Section 46.7.4: Identifier filtering*.

Figure 521. Receive FIFO states

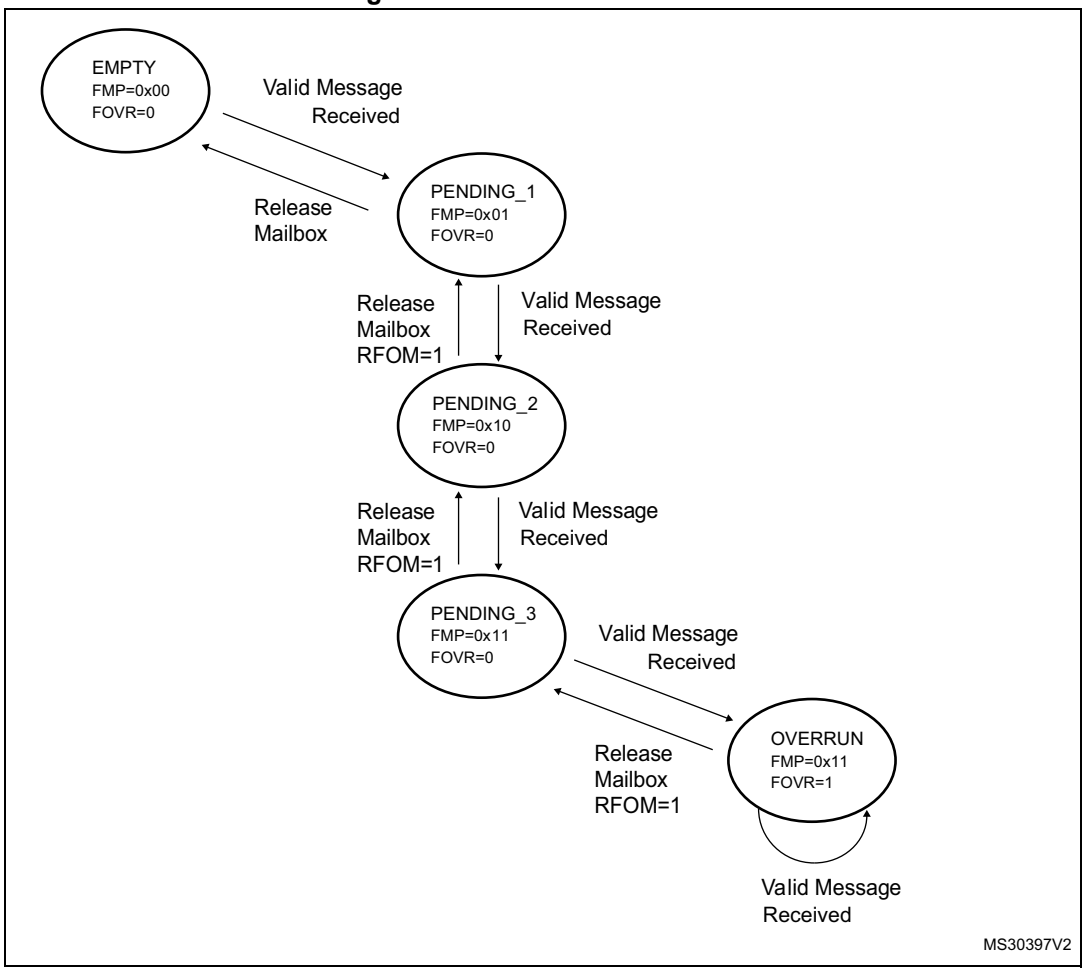

FIFO management

Starting from the **empty** state, the first valid message received is stored in the FIFO which becomes **pending_1**. The hardware signals the event setting the FMP[1:0] bits in the CAN_RFR register to the value 01b. The message is available in the FIFO output mailbox. The software reads out the mailbox content and releases it by setting the RFOM bit in the CAN_RFR register. The FIFO becomes **empty** again. If a new valid message has been received in the meantime, the FIFO stays in **pending_1** state and the new message is available in the output mailbox.

If the application does not release the mailbox, the next valid message will be stored in the FIFO which enters **pending_2** state (FMP[1:0] = 10b). The storage process is repeated for the next valid message putting the FIFO into **pending_3** state (FMP[1:0] = 11b). At this point, the software must release the output mailbox by setting the RFOM bit, so that a mailbox is free to store the next valid message. Otherwise the next valid message received will cause a loss of message.

Refer also to *Section 46.7.5: Message storage*

Overrun

Once the FIFO is in **pending_3** state (i.e. the three mailboxes are full) the next valid message reception will lead to an **overrun** and a message will be lost. The hardware signals the overrun condition by setting the FOVR bit in the CAN_RFR register. Which message is lost depends on the configuration of the FIFO:

- If the FIFO lock function is disabled (RFLM bit in the CAN_MCR register cleared) the last message stored in the FIFO will be overwritten by the new incoming message. In this case the latest messages will be always available to the application.
- If the FIFO lock function is enabled (RFLM bit in the CAN_MCR register set) the most recent message will be discarded and the software will have the three oldest messages in the FIFO available.

Reception related interrupts

Once a message has been stored in the FIFO, the FMP[1:0] bits are updated and an interrupt request is generated if the FMPIE bit in the CAN_IER register is set.

When the FIFO becomes full (i.e. a third message is stored) the FULL bit in the CAN_RFR register is set and an interrupt is generated if the FFIE bit in the CAN_IER register is set.

On overrun condition, the FOVR bit is set and an interrupt is generated if the FOVIE bit in the CAN_IER register is set.

46.7.4 Identifier filtering

In the CAN protocol the identifier of a message is not associated with the address of a node but related to the content of the message. Consequently a transmitter broadcasts its message to all receivers. On message reception a receiver node decides - depending on the identifier value - whether the software needs the message or not. If the message is needed, it is copied into the SRAM. If not, the message must be discarded without intervention by the software.

To fulfill this requirement in dual CAN configuration, bxCAN Controller provides 28 configurable and scalable filter banks (27-0) to the application. In single CAN configuration bxCAN Controller provides 14 configurable and scalable filter banks (13-0) to the application in order to receive only the messages the software needs.

This hardware filtering saves CPU resources which would be otherwise needed to perform filtering by software. Each filter bank x consists of two 32-bit registers, CAN_FxR0 and CAN_FxR1.

Scalable width

To optimize and adapt the filters to the application needs, each filter bank can be scaled independently. Depending on the filter scale a filter bank provides:

- One 32-bit filter for the STDID[10:0], EXTID[17:0], IDE and RTR bits.
- Two 16-bit filters for the STDID[10:0], RTR, IDE and EXTID[17:15] bits.

Refer to *Figure 522*.

Furthermore, the filters can be configured in mask mode or in identifier list mode.

Mask mode

In **mask** mode the identifier registers are associated with mask registers specifying which bits of the identifier are handled as “must match” or as “don’t care”.

Identifier list mode

In **identifier list** mode, the mask registers are used as identifier registers. Thus instead of defining an identifier and a mask, two identifiers are specified, doubling the number of single identifiers. All bits of the incoming identifier must match the bits specified in the filter registers.

Filter bank scale and mode configuration

The filter banks are configured by means of the corresponding CAN_FMR register. To configure a filter bank it must be deactivated by clearing the FACT bit in the CAN_FAR register. The filter scale is configured by means of the corresponding FSCx bit in the CAN_FS1R register, refer to *Figure 522*. The **identifier list** or **identifier mask** mode for the corresponding Mask/Identifier registers is configured by means of the FBMx bits in the CAN_FMR register.

To filter a group of identifiers, configure the Mask/Identifier registers in mask mode.

To select single identifiers, configure the Mask/Identifier registers in identifier list mode.

Filters not used by the application should be left deactivated.

Each filter within a filter bank is numbered (called the *Filter Number*) from 0 to a maximum dependent on the mode and the scale of each of the filter banks.

Concerning the filter configuration, refer to *Figure 522*.

Figure 522. Filter bank scale configuration - register organization

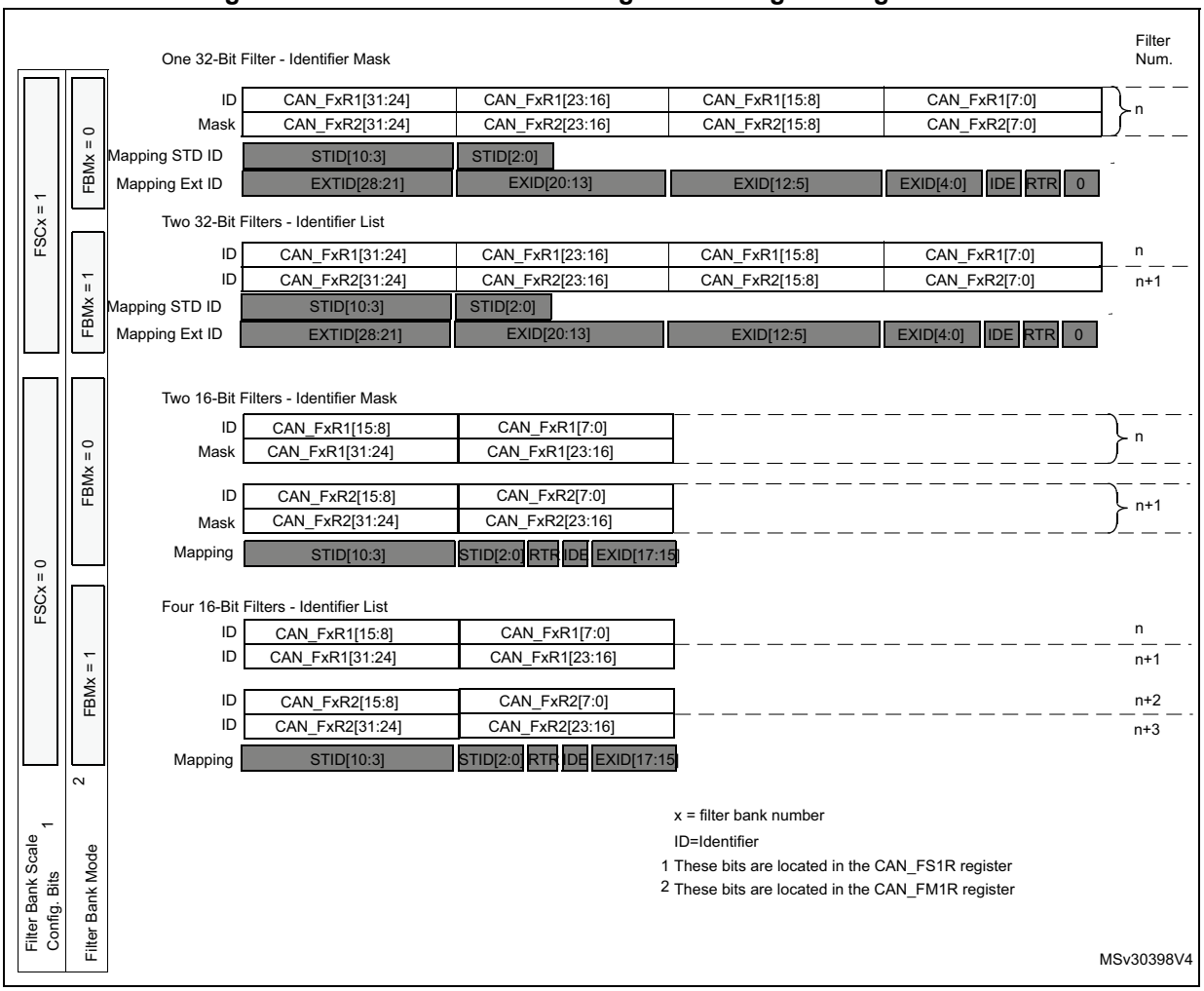

Filter match index

Once a message has been received in the FIFO it is available to the application. Typically, application data is copied into SRAM locations. To copy the data to the right location the application has to identify the data by means of the identifier. To avoid this, and to ease the access to the SRAM locations, the CAN controller provides a Filter Match Index.

This index is stored in the mailbox together with the message according to the filter priority rules. Thus each received message has its associated filter match index.

The Filter Match index can be used in two ways:

- Compare the Filter Match index with a list of expected values.
- Use the Filter Match Index as an index on an array to access the data destination location.

For non masked filters, the software no longer has to compare the identifier.

If the filter is masked the software reduces the comparison to the masked bits only.

The index value of the filter number does not take into account the activation state of the filter banks. In addition, two independent numbering schemes are used, one for each FIFO. Refer to *Figure 523* for an example.

Figure 523. Example of filter numbering

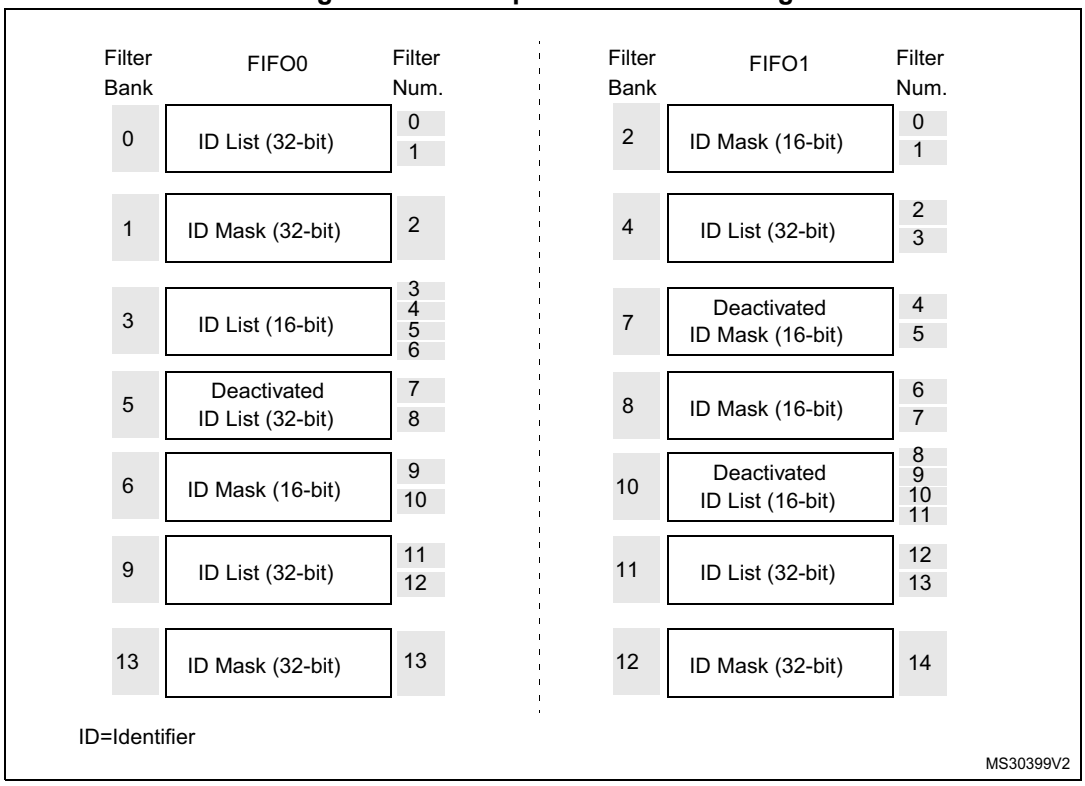

Filter priority rules

Depending on the filter combination it may occur that an identifier passes successfully through several filters. In this case the filter match value stored in the receive mailbox is chosen according to the following priority rules:

- A 32-bit filter takes priority over a 16-bit filter.
- For filters of equal scale, priority is given to the Identifier List mode over the Identifier Mask mode
- For filters of equal scale and mode, priority is given by the filter number (the lower the number, the higher the priority).

Figure 524. Filtering mechanism - example

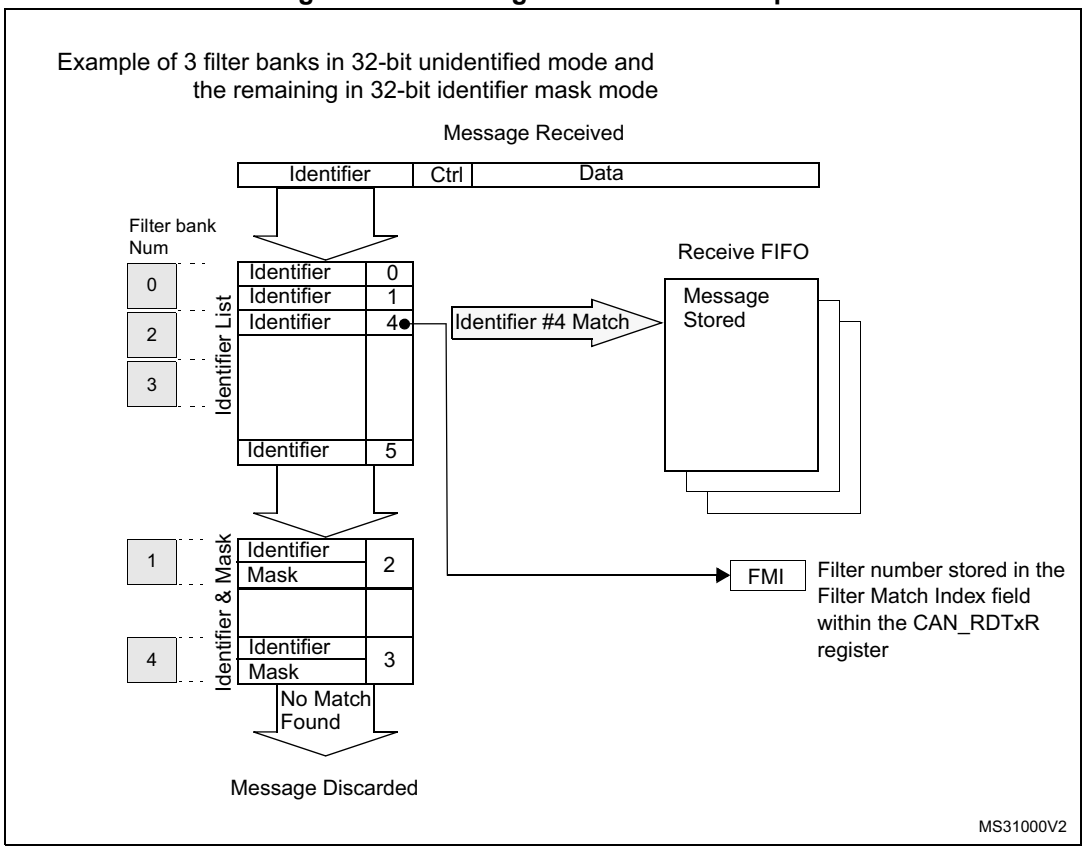

The example above shows the filtering principle of the bxCAN. On reception of a message, the identifier is compared first with the filters configured in identifier list mode. If there is a match, the message is stored in the associated FIFO and the index of the matching filter is stored in the Filter Match Index. As shown in the example, the identifier matches with Identifier #2 thus the message content and FMI 2 is stored in the FIFO.

If there is no match, the incoming identifier is then compared with the filters configured in mask mode.

If the identifier does not match any of the identifiers configured in the filters, the message is discarded by hardware without disturbing the software.

46.7.5 Message storage

The interface between the software and the hardware for the CAN messages is implemented by means of mailboxes. A mailbox contains all information related to a message; identifier, data, control, status and time stamp information.

Transmit mailbox

The software sets up the message to be transmitted in an empty transmit mailbox. The status of the transmission is indicated by hardware in the CAN_TSR register.

Table 313. Transmit mailbox mapping

Offset to transmit mailbox base address	Register name
0	CAN_TIxR
4	CAN_TDTxR
8	CAN_TDLxR
12	CAN_TDHxR

Receive mailbox

When a message has been received, it is available to the software in the FIFO output mailbox. Once the software has handled the message (e.g. read it) the software must release the FIFO output mailbox by means of the RFOM bit in the CAN_RFR register to make the next incoming message available. The filter match index is stored in the MFMI field of the CAN_RDTxR register. The 16-bit time stamp value is stored in the TIME[15:0] field of CAN_RDTxR.

Table 314. Receive mailbox mapping

Offset to receive mailbox base address (bytes)	Register name
0	CAN_RIxR
4	CAN_RDTxR
8	CAN_RDLxR
12	CAN_RDHxR

Figure 525. CAN error state diagram

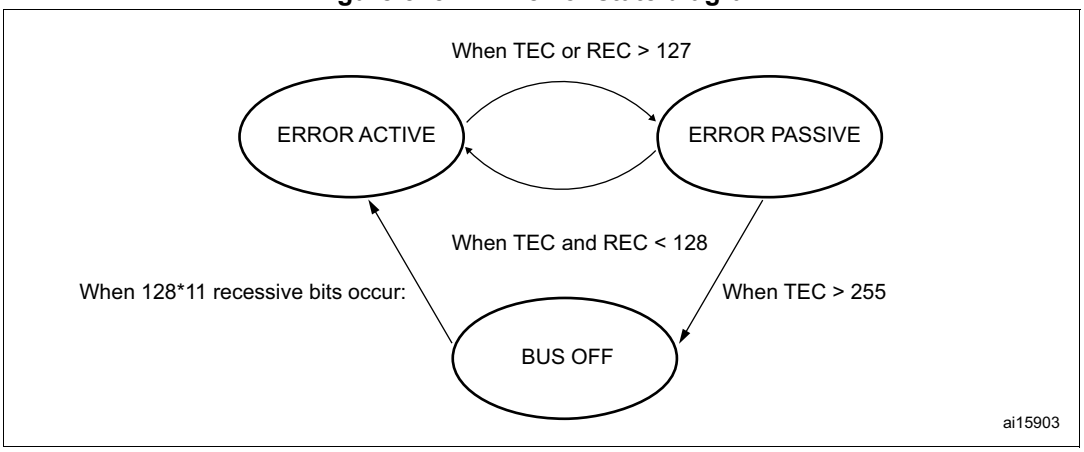

46.7.6 Error management

The error management as described in the CAN protocol is handled entirely by hardware using a Transmit Error Counter (TEC value, in CAN_ESR register) and a Receive Error Counter (REC value, in the CAN_ESR register), which get incremented or decremented according to the error condition. For detailed information about TEC and REC management, refer to the CAN standard.

Both of them may be read by software to determine the stability of the network. Furthermore, the CAN hardware provides detailed information on the current error status in CAN_ESR register. By means of the CAN_IER register (ERRIE bit, etc.), the software can configure the interrupt generation on error detection in a very flexible way.

Bus-Off recovery

The Bus-Off state is reached when TEC is greater than 255, this state is indicated by BOFF bit in CAN_ESR register. In Bus-Off state, the bxCAN is no longer able to transmit and receive messages.

Depending on the ABOM bit in the CAN_MCR register bxCAN will recover from Bus-Off (become error active again) either automatically or on software request. But in both cases the bxCAN has to wait at least for the recovery sequence specified in the CAN standard (128 occurrences of 11 consecutive recessive bits monitored on CANRX).

If ABOM is set, the bxCAN will start the recovering sequence automatically after it has entered Bus-Off state.

If ABOM is cleared, the software must initiate the recovering sequence by requesting bxCAN to enter and to leave initialization mode.

Note: In initialization mode, bxCAN does not monitor the CANRX signal, therefore it cannot complete the recovery sequence. ***To recover, bxCAN must be in normal mode****.*

46.7.7 Bit timing

The bit timing logic monitors the serial bus-line and performs sampling and adjustment of the sample point by synchronizing on the start-bit edge and resynchronizing on the following edges.

Its operation may be explained simply by splitting nominal bit time into three segments as follows:

- **Synchronization segment (SYNC_SEG)**: a bit change is expected to occur within this time segment. It has a fixed length of one time quantum (1 x t_q).
- **Bit segment 1 (BS1)**: defines the location of the sample point. It includes the PROP_SEG and PHASE_SEG1 of the CAN standard. Its duration is programmable between 1 and 16 time quanta but may be automatically lengthened to compensate for positive phase drifts due to differences in the frequency of the various nodes of the network.
- **Bit segment 2 (BS2)**: defines the location of the transmit point. It represents the PHASE_SEG2 of the CAN standard. Its duration is programmable between 1 and 8 time quanta but may also be automatically shortened to compensate for negative phase drifts.

The resynchronization Jump Width (SJW) defines an upper bound to the amount of lengthening or shortening of the bit segments. It is programmable between 1 and 4 time quanta.

A valid edge is defined as the first transition in a bit time from dominant to recessive bus level provided the controller itself does not send a recessive bit.

If a valid edge is detected in BS1 instead of SYNC_SEG, BS1 is extended by up to SJW so that the sample point is delayed.

Conversely, if a valid edge is detected in BS2 instead of SYNC_SEG, BS2 is shortened by up to SJW so that the transmit point is moved earlier.

As a safeguard against programming errors, the configuration of the Bit Timing Register (CAN_BTR) is only possible while the device is in Standby mode.

Note: For a detailed description of the CAN bit timing and resynchronization mechanism, refer to the ISO 11898 standard.

Figure 526. Bit timing

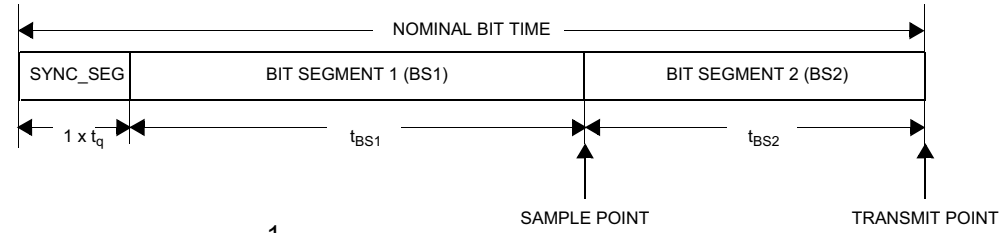

$$\text{Baud Rate} = \frac{1}{\text{NominalBitTime}}$$

$$\text{NominalBitTime} = 1 \times t_q + t_{BS1} + t_{BS2}$$

with:

$t_{BS1} = t_q \times (TS1[3:0] + 1)$,

$t_{BS2} = t_q \times (TS2[2:0] + 1)$,

$t_q = (BRP[9:0] + 1) \times t_{PCLK}$

where t_q refers to the Time quantum

t_{PCLK} = time period of the APB clock,

BRP[9:0], TS1[3:0] and TS2[2:0] are defined in the CAN_BTR Register.

MS31001V2

Figure 527. CAN frames

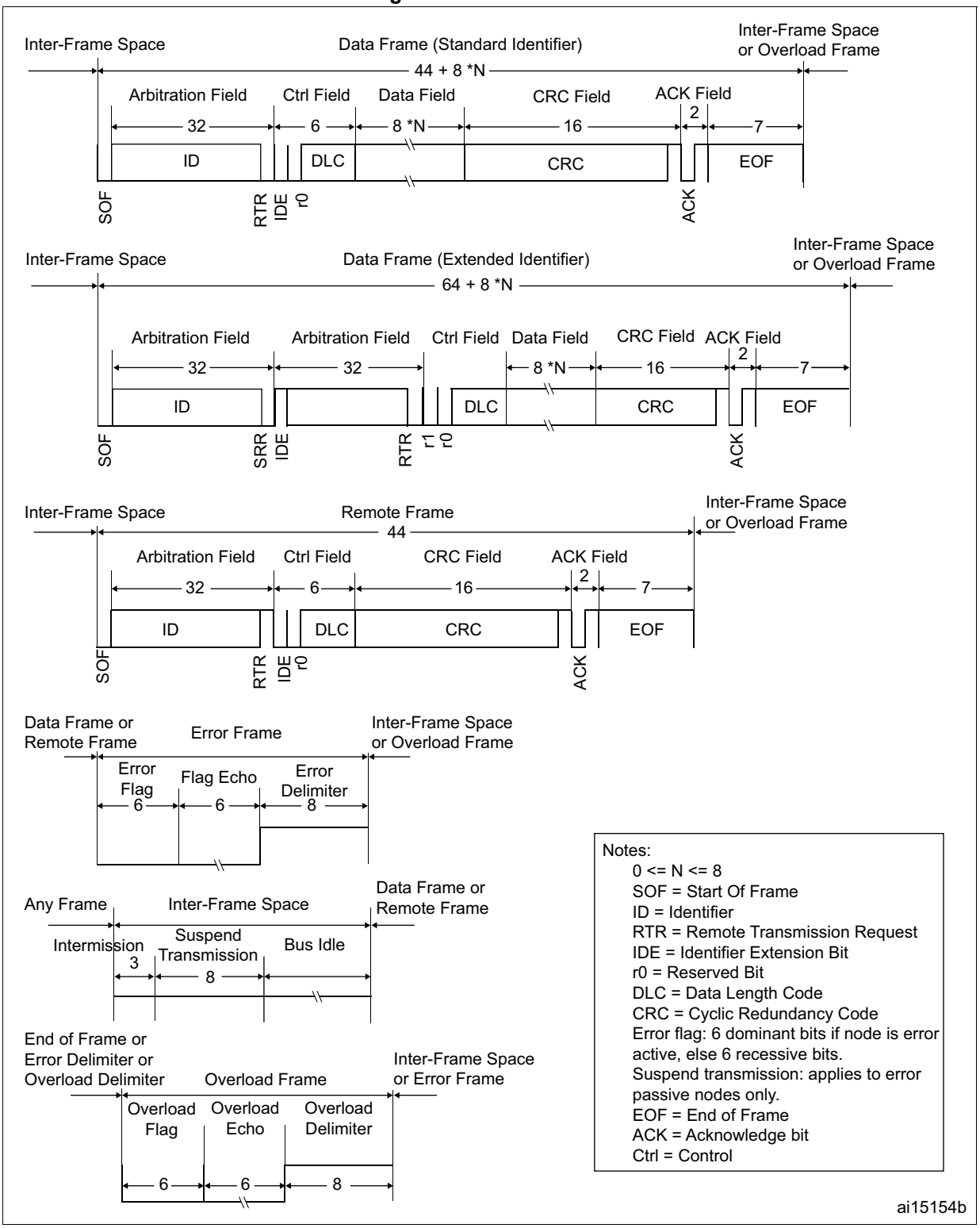

46.8 bxCAN interrupts

Four interrupt vectors are dedicated to bxCAN. Each interrupt source can be independently enabled or disabled by means of the CAN Interrupt Enable Register (CAN_IER).

Figure 528. Event flags and interrupt generation

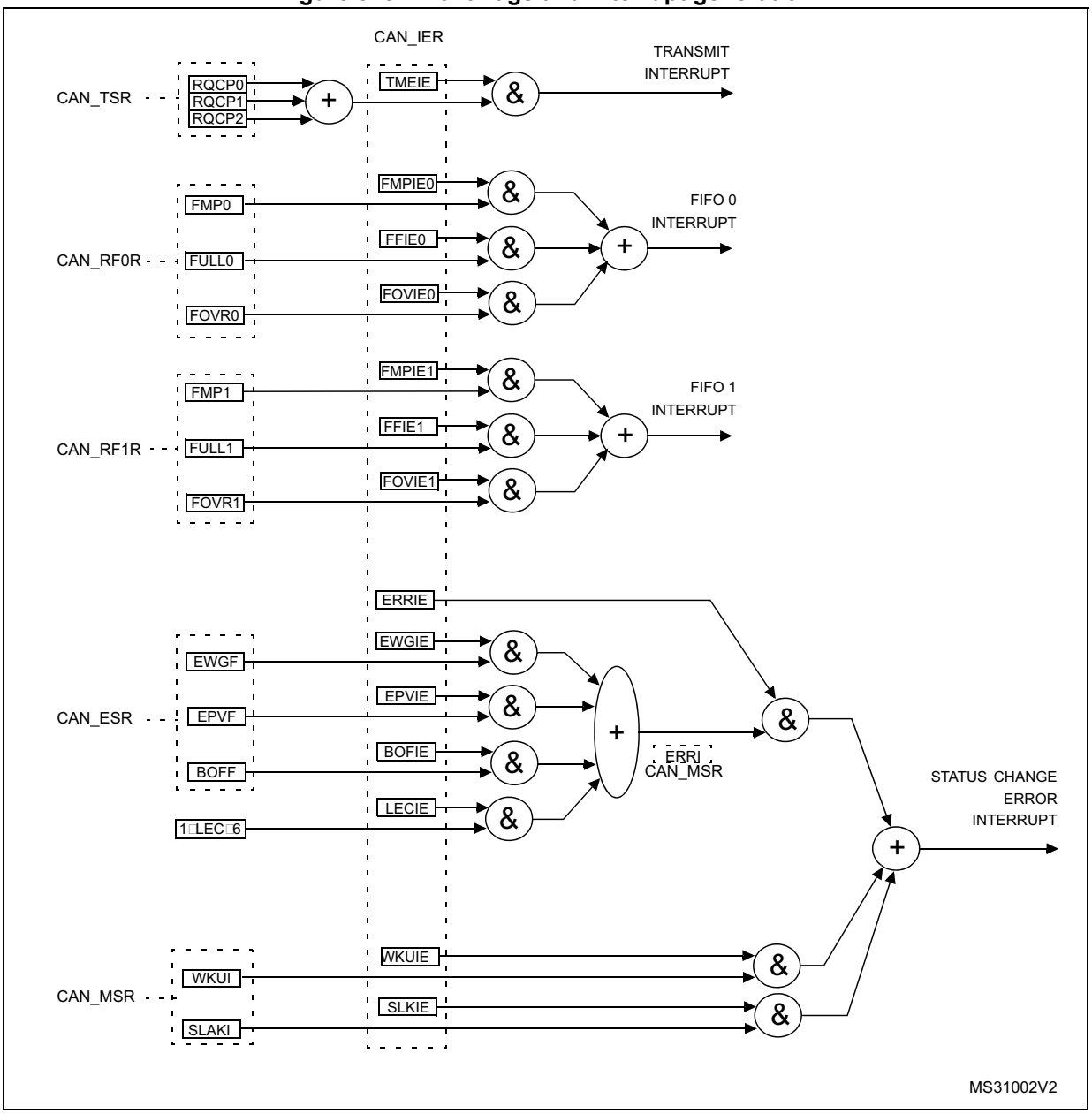

- The **transmit interrupt** can be generated by the following events:
  - Transmit mailbox 0 becomes empty, RQCP0 bit in the CAN_TSR register set.
  - Transmit mailbox 1 becomes empty, RQCP1 bit in the CAN_TSR register set.
  - Transmit mailbox 2 becomes empty, RQCP2 bit in the CAN_TSR register set.
- The **FIFO 0 interrupt** can be generated by the following events:
  - Reception of a new message, FMP0 bits in the CAN_RF0R register are not '00'.
  - FIFO0 full condition, FULL0 bit in the CAN_RF0R register set.
  - FIFO0 overrun condition, FOVR0 bit in the CAN_RF0R register set.
- The **FIFO 1 interrupt** can be generated by the following events:
  - Reception of a new message, FMP1 bits in the CAN_RF1R register are not '00'.
  - FIFO1 full condition, FULL1 bit in the CAN_RF1R register set.
  - FIFO1 overrun condition, FOVR1 bit in the CAN_RF1R register set.
- The **error and status change interrupt** can be generated by the following events:
  - Error condition, for more details on error conditions refer to the CAN Error Status register (CAN_ESR).
  - Wakeup condition, SOF monitored on the CAN Rx signal.
  - Entry into Sleep mode.

46.9 CAN registers

The peripheral registers have to be accessed by words (32 bits).

46.9.1 Register access protection

Erroneous access to certain configuration registers can cause the hardware to temporarily disturb the whole CAN network. Therefore the CAN_BTR register can be modified by software only while the CAN hardware is in initialization mode.

Although the transmission of incorrect data will not cause problems at the CAN network level, it can severely disturb the application. A transmit mailbox can be only modified by software while it is in empty state, refer to *Figure 520: Transmit mailbox states*.

The filter values can be modified either deactivating the associated filter banks or by setting the FINIT bit. Moreover, the modification of the filter configuration (scale, mode and FIFO assignment) in CAN_FMxR, CAN_FSxR and CAN_FFAR registers can only be done when the filter initialization mode is set (FINIT=1) in the CAN_FMR register.

46.9.2 CAN control and status registers

Refer to *Section 1.2* for a list of abbreviations used in register descriptions.

CAN master control register (CAN_MCR)

Address offset: 0x00
Reset value: 0x0001 0002

31	30	29	28	27	26	25	24	23	22	21	20	19	18	17	16
Res.	Res.	Res.	Res.	Res.	Res.	Res.	Res.	Res.	Res.	Res.	Res.	Res.	Res.	Res.	DBF
															rw

15	14	13	12	11	10	9	8	7	6	5	4	3	2	1	0
RESET	Res.	Res.	Res.	Res.	Res.	Res.	Res.	TTCM	ABOM	AWUM	NART	RFLM	TXFP	SLEEP	INRQ
rs								rw	rw	rw	rw	rw	rw	rw	rw

Bits 31:17 Reserved, must be kept at reset value.

Bit 16 **DBF:** Debug freeze

0: CAN working during debug

1: CAN reception/transmission frozen during debug. Reception FIFOs can still be accessed/controlled normally.

Bit 15 **RESET:** bxCAN software master reset

0: Normal operation.

1: Force a master reset of the bxCAN -> Sleep mode activated after reset (FMP bits and CAN_MCR register are initialized to the reset values). This bit is automatically reset to 0.

Bits 14:8 Reserved, must be kept at reset value.

Bit 7 **TTCM**: Time triggered communication mode

0: Time Triggered Communication mode disabled.

1: Time Triggered Communication mode enabled

Note: For more information on Time Triggered Communication mode, refer to Section 46.7.2: Time triggered communication mode.

Bit 6 **ABOM:** Automatic bus-off management

This bit controls the behavior of the CAN hardware on leaving the Bus-Off state.

0: The Bus-Off state is left on software request, once 128 occurrences of 11 recessive bits have been monitored and the software has first set and cleared the INRQ bit of the CAN_MCR register.

1: The Bus-Off state is left automatically by hardware once 128 occurrences of 11 recessive bits have been monitored.

For detailed information on the Bus-Off state refer to *Section 46.7.6: Error management*.

Bit 5 **AWUM**: Automatic wakeup mode

This bit controls the behavior of the CAN hardware on message reception during Sleep mode.

0: The Sleep mode is left on software request by clearing the SLEEP bit of the CAN_MCR register.

1: The Sleep mode is left automatically by hardware on CAN message detection.

The SLEEP bit of the CAN_MCR register and the SLAK bit of the CAN_MSR register are cleared by hardware.

Bit 4 **NART**: No automatic retransmission

0: The CAN hardware will automatically retransmit the message until it has been successfully transmitted according to the CAN standard.

1: A message will be transmitted only once, independently of the transmission result (successful, error or arbitration lost).

Bit 3 **RFLM**: Receive FIFO locked mode

0: Receive FIFO not locked on overrun. Once a receive FIFO is full the next incoming message will overwrite the previous one.
1: Receive FIFO locked against overrun. Once a receive FIFO is full the next incoming message will be discarded.

Bit 2 **TXFP**: Transmit FIFO priority

This bit controls the transmission order when several mailboxes are pending at the same time.
0: Priority driven by the identifier of the message
1: Priority driven by the request order (chronologically)

Bit 1 **SLEEP**: Sleep mode request

This bit is set by software to request the CAN hardware to enter the Sleep mode. Sleep mode will be entered as soon as the current CAN activity (transmission or reception of a CAN frame) has been completed.
This bit is cleared by software to exit Sleep mode.
This bit is cleared by hardware when the AWUM bit is set and a SOF bit is detected on the CAN Rx signal.
This bit is set after reset - CAN starts in Sleep mode.

Bit 0 **INRQ**: Initialization request

The software clears this bit to switch the hardware into normal mode. Once 11 consecutive recessive bits have been monitored on the Rx signal the CAN hardware is synchronized and ready for transmission and reception. Hardware signals this event by clearing the INAK bit in the CAN_MSR register.
Software sets this bit to request the CAN hardware to enter initialization mode. Once software has set the INRQ bit, the CAN hardware waits until the current CAN activity (transmission or reception) is completed before entering the initialization mode. Hardware signals this event by setting the INAK bit in the CAN_MSR register.

CAN master status register (CAN_MSR)

Address offset: 0x04
Reset value: 0x0000 0C02

31	30	29	28	27	26	25	24	23	22	21	20	19	18	17	16
Res.	Res.	Res.	Res.	Res.	Res.	Res.	Res.	Res.	Res.	Res.	Res.	Res.	Res.	Res.	Res.

15	14	13	12	11	10	9	8	7	6	5	4	3	2	1	0
Res.	Res.	Res.	Res.	RX	SAMP	RXM	TXM	Res.	Res.	Res.	SLAKI	WKUI	ERRI	SLAK	INAK
				r	r	r	r				rc_w1	rc_w1	rc_w1	r	r

Bits 31:12 Reserved, must be kept at reset value.

Bit 11 **RX**: CAN Rx signal

Monitors the actual value of the **CAN_RX** Pin.

Bit 10 **SAMP**: Last sample point

The value of RX on the last sample point (current received bit value).

Bit 9 **RXM**: Receive mode

The CAN hardware is currently receiver.

Bit 8 **TXM**: Transmit mode

The CAN hardware is currently transmitter.

Bits 7:5 Reserved, must be kept at reset value.

Bit 4 **SLAKI**: Sleep acknowledge interrupt

When SLKIE=1, this bit is set by hardware to signal that the bxCAN has entered Sleep Mode. When set, this bit generates a status change interrupt if the SLKIE bit in the CAN_IER register is set.
This bit is cleared by software or by hardware, when SLAK is cleared.

Note: When SLKIE=0, no polling on SLAKI is possible. In this case the SLAK bit can be polled.

Bit 3 **WKUI**: Wakeup interrupt

This bit is set by hardware to signal that a SOF bit has been detected while the CAN hardware was in Sleep mode. Setting this bit generates a status change interrupt if the WKUIE bit in the CAN_IER register is set.
This bit is cleared by software.

Bit 2 **ERRI**: Error interrupt

This bit is set by hardware when a bit of the CAN_ESR has been set on error detection and the corresponding interrupt in the CAN_IER is enabled. Setting this bit generates a status change interrupt if the ERRIE bit in the CAN_IER register is set.
This bit is cleared by software.

Bit 1 **SLAK**: Sleep acknowledge

This bit is set by hardware and indicates to the software that the CAN hardware is now in Sleep mode. This bit acknowledges the Sleep mode request from the software (set SLEEP bit in CAN_MCR register).
This bit is cleared by hardware when the CAN hardware has left Sleep mode (to be synchronized on the CAN bus). To be synchronized the hardware has to monitor a sequence of 11 consecutive recessive bits on the CAN RX signal.

Note: The process of leaving Sleep mode is triggered when the SLEEP bit in the CAN_MCR register is cleared. Refer to the AWUM bit of the CAN_MCR register description for detailed information for clearing SLEEP bit

Bit 0 **INAK**: Initialization acknowledge

This bit is set by hardware and indicates to the software that the CAN hardware is now in initialization mode. This bit acknowledges the initialization request from the software (set INRQ bit in CAN_MCR register).
This bit is cleared by hardware when the CAN hardware has left the initialization mode (to be synchronized on the CAN bus). To be synchronized the hardware has to monitor a sequence of 11 consecutive recessive bits on the CAN RX signal.

CAN transmit status register (CAN_TSR)

Address offset: 0x08
Reset value: 0x1C00 0000

31	30	29	28	27	26	25	24	23	22	21	20	19	18	17	16
LOW2	LOW1	LOW0	TME2	TME1	TME0	CODE[1:0]		ABRQ2	Res.	Res.	Res.	TERR2	ALST2	TXOK2	RQCP2
r	r	r	r	r	r	r	r	rs				rc_w1	rc_w1	rc_w1	rc_w1
15	14	13	12	11	10	9	8	7	6	5	4	3	2	1	0
ABRQ1	Res.	Res.	Res.	TERR1	ALST1	TXOK1	RQCP1	ABRQ0	Res.	Res.	Res.	TERR0	ALST0	TXOK0	RQCP0
rs				rc_w1	rc_w1	rc_w1	rc_w1	rs				rc_w1	rc_w1	rc_w1	rc_w1

Bit 31 **LOW2**: Lowest priority flag for mailbox 2

This bit is set by hardware when more than one mailbox are pending for transmission and mailbox 2 has the lowest priority.

Bit 30 **LOW1**: Lowest priority flag for mailbox 1

This bit is set by hardware when more than one mailbox are pending for transmission and mailbox 1 has the lowest priority.

Bit 29 **LOW0**: Lowest priority flag for mailbox 0

This bit is set by hardware when more than one mailbox are pending for transmission and mailbox 0 has the lowest priority.

Note: The LOW[2:0] bits are set to zero when only one mailbox is pending.

Bit 28 **TME2**: Transmit mailbox 2 empty

This bit is set by hardware when no transmit request is pending for mailbox 2.

Bit 27 **TME1**: Transmit mailbox 1 empty

This bit is set by hardware when no transmit request is pending for mailbox 1.

Bit 26 **TME0**: Transmit mailbox 0 empty

This bit is set by hardware when no transmit request is pending for mailbox 0.

Bits 25:24 **CODE[1:0]**: Mailbox code

In case at least one transmit mailbox is free, the code value is equal to the number of the next transmit mailbox free.
In case all transmit mailboxes are pending, the code value is equal to the number of the transmit mailbox with the lowest priority.

Bit 23 **ABRQ2**: Abort request for mailbox 2

Set by software to abort the transmission request for the corresponding mailbox.
Cleared by hardware when the mailbox becomes empty.
Setting this bit has no effect when the mailbox is not pending for transmission.

Bits 22:20 Reserved, must be kept at reset value.

Bit 19 **TERR2**: Transmission error of mailbox 2

This bit is set when the previous TX failed due to an error.

Bit 18 **ALST2**: Arbitration lost for mailbox 2

This bit is set when the previous TX failed due to an arbitration lost.

Bit 17 **TXOK2**: Transmission OK of mailbox 2

The hardware updates this bit after each transmission attempt.
0: The previous transmission failed
1: The previous transmission was successful
This bit is set by hardware when the transmission request on mailbox 2 has been completed successfully. Refer to *Figure 520*.

Bit 16 **RQCP2**: Request completed mailbox2

Set by hardware when the last request (transmit or abort) has been performed.
Cleared by software writing a “1” or by hardware on transmission request (TXRQ2 set in CAN_TMID2R register).
Clearing this bit clears all the status bits (TXOK2, ALST2 and TERR2) for Mailbox 2.

Bit 15 **ABRQ1**: Abort request for mailbox 1

Set by software to abort the transmission request for the corresponding mailbox.
Cleared by hardware when the mailbox becomes empty.
Setting this bit has no effect when the mailbox is not pending for transmission.

Bits 14:12 Reserved, must be kept at reset value.

Bit 11 **TERR1**: Transmission error of mailbox1
This bit is set when the previous TX failed due to an error.

Bit 10 **ALST1**: Arbitration lost for mailbox1
This bit is set when the previous TX failed due to an arbitration lost.

Bit 9 **TXOK1**: Transmission OK of mailbox1
The hardware updates this bit after each transmission attempt.
0: The previous transmission failed
1: The previous transmission was successful
This bit is set by hardware when the transmission request on mailbox 1 has been completed successfully. Refer to *Figure 520*

Bit 8 **RQCP1**: Request completed mailbox1
Set by hardware when the last request (transmit or abort) has been performed.
Cleared by software writing a “1” or by hardware on transmission request (TXRQ1 set in CAN_TI1R register).
Clearing this bit clears all the status bits (TXOK1, ALST1 and TERR1) for Mailbox 1.

Bit 7 **ABRQ0**: Abort request for mailbox0
Set by software to abort the transmission request for the corresponding mailbox.
Cleared by hardware when the mailbox becomes empty.
Setting this bit has no effect when the mailbox is not pending for transmission.

Bits 6:4 Reserved, must be kept at reset value.

Bit 3 **TERR0**: Transmission error of mailbox0
This bit is set when the previous TX failed due to an error.

Bit 2 **ALST0**: Arbitration lost for mailbox0
This bit is set when the previous TX failed due to an arbitration lost.

Bit 1 **TXOK0**: Transmission OK of mailbox0
The hardware updates this bit after each transmission attempt.
0: The previous transmission failed
1: The previous transmission was successful
This bit is set by hardware when the transmission request on mailbox 1 has been completed successfully. Refer to *Figure 520*

Bit 0 **RQCP0**: Request completed mailbox0
Set by hardware when the last request (transmit or abort) has been performed.
Cleared by software writing a “1” or by hardware on transmission request (TXRQ0 set in CAN_TI0R register).
Clearing this bit clears all the status bits (TXOK0, ALST0 and TERR0) for Mailbox 0.

CAN receive FIFO 0 register (CAN_RF0R)

Address offset: 0x0C
Reset value: 0x0000 0000

31	30	29	28	27	26	25	24	23	22	21	20	19	18	17	16
Res.	Res.	Res.	Res.	Res.	Res.	Res.	Res.	Res.	Res.	Res.	Res.	Res.	Res.	Res.	Res.

15	14	13	12	11	10	9	8	7	6	5	4	3	2	1	0
Res.	Res.	Res.	Res.	Res.	Res.	Res.	Res.	Res.	Res.	RFOM0	FOVR0	FULL0	Res.	FMP0[1:0]	
										rs	rc_w1	rc_w1		r	r

Bits 31:6 Reserved, must be kept at reset value.

Bit 5 **RFOM0**: Release FIFO 0 output mailbox

Set by software to release the output mailbox of the FIFO. The output mailbox can only be released when at least one message is pending in the FIFO. Setting this bit when the FIFO is empty has no effect. If at least two messages are pending in the FIFO, the software has to release the output mailbox to access the next message.
Cleared by hardware when the output mailbox has been released.

Bit 4 **FOVR0**: FIFO 0 overrun

This bit is set by hardware when a new message has been received and passed the filter while the FIFO was full.
This bit is cleared by software.

Bit 3 **FULL0**: FIFO 0 full

Set by hardware when three messages are stored in the FIFO.
This bit is cleared by software.

Bit 2 Reserved, must be kept at reset value.

Bits 1:0 **FMP0[1:0]**: FIFO 0 message pending

These bits indicate how many messages are pending in the receive FIFO.
FMP is increased each time the hardware stores a new message in to the FIFO. FMP is decreased each time the software releases the output mailbox by setting the RFOM0 bit.

CAN receive FIFO 1 register (CAN_RF1R)

Address offset: 0x10
Reset value: 0x0000 0000

31	30	29	28	27	26	25	24	23	22	21	20	19	18	17	16
Res.	Res.	Res.	Res.	Res.	Res.	Res.	Res.	Res.	Res.	Res.	Res.	Res.	Res.	Res.	Res.

15	14	13	12	11	10	9	8	7	6	5	4	3	2	1	0
Res.	Res.	Res.	Res.	Res.	Res.	Res.	Res.	Res.	Res.	RFOM1	FOVR1	FULL1	Res.	FMP1[1:0]	
										rs	rc_w1	rc_w1		r	r

Bits 31:6 Reserved, must be kept at reset value.

Bit 5 **RFOM1**: Release FIFO 1 output mailbox

Set by software to release the output mailbox of the FIFO. The output mailbox can only be released when at least one message is pending in the FIFO. Setting this bit when the FIFO is empty has no effect. If at least two messages are pending in the FIFO, the software has to release the output mailbox to access the next message.
Cleared by hardware when the output mailbox has been released.

Bit 4 **FOVR1**: FIFO 1 overrun

This bit is set by hardware when a new message has been received and passed the filter while the FIFO was full.
This bit is cleared by software.

Bit 3 **FULL1**: FIFO 1 full

Set by hardware when three messages are stored in the FIFO.
This bit is cleared by software.

Bit 2 Reserved, must be kept at reset value.

Bits 1:0 **FMP1[1:0]**: FIFO 1 message pending

These bits indicate how many messages are pending in the receive FIFO1.
FMP1 is increased each time the hardware stores a new message in to the FIFO1. FMP is decreased each time the software releases the output mailbox by setting the RFOM1 bit.

CAN interrupt enable register (CAN_IER)

Address offset: 0x14
Reset value: 0x0000 0000

31	30	29	28	27	26	25	24	23	22	21	20	19	18	17	16
Res.	Res.	Res.	Res.	Res.	Res.	Res.	Res.	Res.	Res.	Res.	Res.	Res.	Res.	SLKIE	WKUIE
														rw	rw

15	14	13	12	11	10	9	8	7	6	5	4	3	2	1	0
ERRIE	Res.	Res.	Res.	LEC IE	BOF IE	EPV IE	EWG IE	Res.	FOV IE1	FF IE1	FMP IE1	FOV IE0	FF IE0	FMP IE0	TME IE
rw				rw	rw	rw	rw		rw	rw	rw	rw	rw	rw	rw

Bits 31:18 Reserved, must be kept at reset value.

Bit 17 **SLKIE**: Sleep interrupt enable

0: No interrupt when SLAKI bit is set.
1: Interrupt generated when SLAKI bit is set.

Bit 16 **WKUIE**: Wakeup interrupt enable

0: No interrupt when WKUI is set.
1: Interrupt generated when WKUI bit is set.

Bit 15 **ERRIE**: Error interrupt enable

0: No interrupt will be generated when an error condition is pending in the CAN_ESR.
1: An interrupt will be generation when an error condition is pending in the CAN_ESR.

Bits 14:12 Reserved, must be kept at reset value.

Bit 11 **LECIE**: Last error code interrupt enable

0: ERRI bit will not be set when the error code in LEC[2:0] is set by hardware on error detection.
1: ERRI bit will be set when the error code in LEC[2:0] is set by hardware on error detection.

Bit 10 **BOFIE**: Bus-off interrupt enable

0: ERRI bit will not be set when BOFF is set.
1: ERRI bit will be set when BOFF is set.

Bit 9 **EPVIE**: Error passive interrupt enable

0: ERRI bit will not be set when EPVF is set.
1: ERRI bit will be set when EPVF is set.

Bit 8 **EWGIE**: Error warning interrupt enable
0: ERRI bit will not be set when EWGF is set.
1: ERRI bit will be set when EWGF is set.

Bit 7 Reserved, must be kept at reset value.

Bit 6 **FOVIE1**: FIFO overrun interrupt enable
0: No interrupt when FOVR is set.
1: Interrupt generation when FOVR is set.

Bit 5 **FFIE1**: FIFO full interrupt enable
0: No interrupt when FULL bit is set.
1: Interrupt generated when FULL bit is set.

Bit 4 **FMPIE1**: FIFO message pending interrupt enable
0: No interrupt generated when state of FMP[1:0] bits are not 00b.
1: Interrupt generated when state of FMP[1:0] bits are not 00b.

Bit 3 **FOVIE0**: FIFO overrun interrupt enable
0: No interrupt when FOVR bit is set.
1: Interrupt generated when FOVR bit is set.

Bit 2 **FFIE0**: FIFO full interrupt enable
0: No interrupt when FULL bit is set.
1: Interrupt generated when FULL bit is set.

Bit 1 **FMPIE0**: FIFO message pending interrupt enable
0: No interrupt generated when state of FMP[1:0] bits are not 00b.
1: Interrupt generated when state of FMP[1:0] bits are not 00b.

Bit 0 **TMEIE**: Transmit mailbox empty interrupt enable
0: No interrupt when RQCPx bit is set.
1: Interrupt generated when RQCPx bit is set.

Note: Refer to Section 46.8: bxCAN interrupts.

CAN error status register (CAN_ESR)

Address offset: 0x18
Reset value: 0x0000 0000

31	30	29	28	27	26	25	24	23	22	21	20	19	18	17	16
REC[7:0]								TEC[7:0]							
r	r	r	r	r	r	r	r	r	r	r	r	r	r	r	r
15	14	13	12	11	10	9	8	7	6	5	4	3	2	1	0
Res.	Res.	Res.	Res.	Res.	Res.	Res.	Res.	Res.	LEC[2:0]			Res.	BOFF	EPVF	EWGF
									rw	rw	rw		r	r	r

Bits 31:24 **REC[7:0]**: Receive error counter

The implementing part of the fault confinement mechanism of the CAN protocol. In case of an error during reception, this counter is incremented by 1 or by 8 depending on the error condition as defined by the CAN standard. After every successful reception the counter is decremented by 1 or reset to 120 if its value was higher than 128. When the counter value exceeds 127, the CAN controller enters the error passive state.

Bits 23:16 **TEC[7:0]**: Least significant byte of the 9-bit transmit error counter

The implementing part of the fault confinement mechanism of the CAN protocol.

Bits 15:7 Reserved, must be kept at reset value.

Bits 6:4 **LEC[2:0]**: Last error code

This field is set by hardware and holds a code which indicates the error condition of the last error detected on the CAN bus. If a message has been transferred (reception or transmission) without error, this field will be cleared to '0'.
The LEC[2:0] bits can be set to value 0b111 by software. They are updated by hardware to indicate the current communication status.
000: No Error
001: Stuff Error
010: Form Error
011: Acknowledgment Error
100: Bit recessive Error
101: Bit dominant Error
110: CRC Error
111: Set by software

Bit 3 Reserved, must be kept at reset value.

Bit 2 **BOFF**: Bus-off flag

This bit is set by hardware when it enters the bus-off state. The bus-off state is entered on TEC overflow, greater than 255, refer to *Section 46.7.6 on page 1645*.

Bit 1 **EPVF**: Error passive flag

This bit is set by hardware when the Error Passive limit has been reached (Receive Error Counter or Transmit Error Counter>127).

Bit 0 **EWGF**: Error warning flag

This bit is set by hardware when the warning limit has been reached (Receive Error Counter or Transmit Error Counter≥96).

CAN bit timing register (CAN_BTR)

Address offset: 0x1C
Reset value: 0x0123 0000

This register can only be accessed by the software when the CAN hardware is in initialization mode.

31	30	29	28	27	26	25	24	23	22	21	20	19	18	17	16
SILM	LBKM	Res.	Res.	Res.	Res.	SJW[1:0]		Res.	TS2[2:0]			TS1[3:0]			
rw	rw					rw	rw		rw	rw	rw	rw	rw	rw	rw
15	14	13	12	11	10	9	8	7	6	5	4	3	2	1	0
Res.	Res.	Res.	Res.	Res.	Res.	BRP[9:0]									
						rw	rw	rw	rw	rw	rw	rw	rw	rw	rw

Bit 31 **SILM**: Silent mode (debug)
0: Normal operation
1: Silent Mode

Bit 30 **LBKM**: Loop back mode (debug)
0: Loop Back Mode disabled
1: Loop Back Mode enabled

Bits 29:26 Reserved, must be kept at reset value.

Bits 25:24 **SJW[1:0]**: Resynchronization jump width
These bits define the maximum number of time quanta the CAN hardware is allowed to lengthen or shorten a bit to perform the resynchronization.
$t_{RJW} = t_q$ x (SJW[1:0] + 1)

Bit 23 Reserved, must be kept at reset value.

Bits 22:20 **TS2[2:0]**: Time segment 2
These bits define the number of time quanta in Time Segment 2.
$t_{BS2} = t_q$ x (TS2[2:0] + 1)

Bits 19:16 **TS1[3:0]**: Time segment 1
These bits define the number of time quanta in Time Segment 1
$t_{BS1} = t_q$ x (TS1[3:0] + 1)
For more information on bit timing, refer to *Section 46.7.7: Bit timing on page 1645*.

Bits 15:10 Reserved, must be kept at reset value.

Bits 9:0 **BRP[9:0]**: Baud rate prescaler
These bits define the length of a time quanta.
t_q = (BRP[9:0]+1) x t_{PCLK}

46.9.3 CAN mailbox registers

This chapter describes the registers of the transmit and receive mailboxes. Refer to *Section 46.7.5: Message storage on page 1643* for detailed register mapping.

Transmit and receive mailboxes have the same registers except:

- The FMI field in the CAN_RDTxR register.
- A receive mailbox is always write protected.
- A transmit mailbox is write-enabled only while empty, corresponding TME bit in the CAN_TSR register set.

There are 3 TX Mailboxes and 2 RX Mailboxes. Each RX Mailbox allows access to a 3 level depth FIFO, the access being offered only to the oldest received message in the FIFO.

Each mailbox consist of 4 registers.

Figure 529. CAN mailbox registers

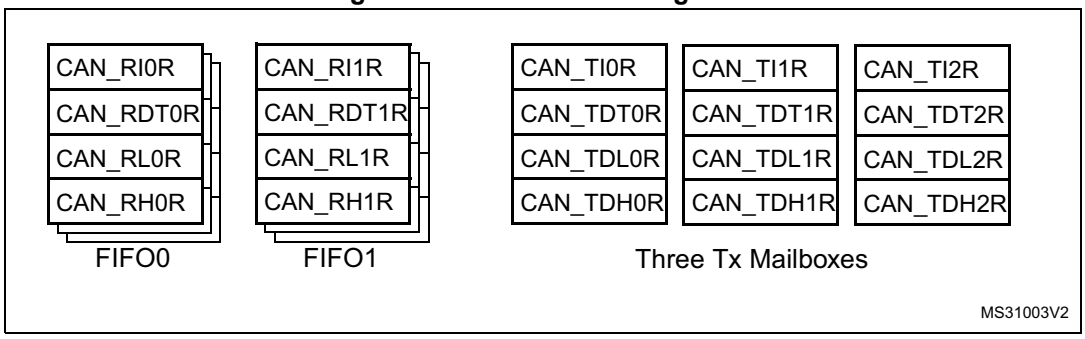

CAN TX mailbox identifier register (CAN_TIxR) (x = 0..2)

Address offsets: 0x180, 0x190, 0x1A0
Reset value: 0xXXXX XXXX (except bit 0, TXRQ = 0)

All TX registers are write protected when the mailbox is pending transmission (TMEx reset).

This register also implements the TX request control (bit 0) - reset value 0.

31	30	29	28	27	26	25	24	23	22	21	20	19	18	17	16
STID[10:0]/EXID[28:18]											EXID[17:13]				
rw	rw	rw	rw	rw	rw	rw	rw	rw	rw	rw	rw	rw	rw	rw	rw
15	14	13	12	11	10	9	8	7	6	5	4	3	2	1	0
EXID[12:0]													IDE	RTR	TXRQ
rw	rw	rw	rw	rw	rw	rw	rw	rw	rw	rw	rw	rw	rw	rw	rw

Bits 31:21 **STID[10:0]/EXID[28:18]**: Standard identifier or extended identifier
The standard identifier or the MSBs of the extended identifier (depending on the IDE bit value).

Bit 20:3 **EXID[17:0]**: Extended identifier
The LSBs of the extended identifier.

Bit 2 **IDE**: Identifier extension
This bit defines the identifier type of message in the mailbox.
0: Standard identifier.
1: Extended identifier.

Bit 1 **RTR**: Remote transmission request
0: Data frame
1: Remote frame

Bit 0 **TXRQ**: Transmit mailbox request
Set by software to request the transmission for the corresponding mailbox.
Cleared by hardware when the mailbox becomes empty.

CAN mailbox data length control and time stamp register (CAN_TDTxR) (x = 0..2)

All bits of this register are write protected when the mailbox is not in empty state.

Address offsets: 0x184, 0x194, 0x1A4
Reset value: 0xXXXX XXXX

31	30	29	28	27	26	25	24	23	22	21	20	19	18	17	16
TIME[15:0]															
rw	rw	rw	rw	rw	rw	rw	rw	rw	rw	rw	rw	rw	rw	rw	rw
15	14	13	12	11	10	9	8	7	6	5	4	3	2	1	0
Res.	Res.	Res.	Res.	Res.	Res.	Res.	Res.	Res.	Res.	Res.	Res.	DLC[3:0]			
												rw	rw	rw	rw

Bits 31:16 **TIME[15:0]**: Message time stamp
This field contains the 16-bit timer value captured at the SOF transmission.

Bits 15:9 Reserved, must be kept at reset value.

Bit 8 **TGT**: Transmit global time
This bit is active only when the hardware is in the Time Trigger Communication mode, TTCM bit of the CAN_MCR register is set.
0: Time stamp TIME[15:0] is not sent.
1: Time stamp TIME[15:0] value is sent in the last two data bytes of the 8-byte message: TIME[7:0] in data byte 7 and TIME[15:8] in data byte 6, replacing the data written in CAN_TDHxR[31:16] register (DATA6[7:0] and DATA7[7:0]). DLC must be programmed as 8 in order these two bytes to be sent over the CAN bus.

Bits 7:4 Reserved, must be kept at reset value.

Bits 3:0 **DLC[3:0]**: Data length code
This field defines the number of data bytes a data frame contains or a remote frame request. A message can contain from 0 to 8 data bytes, depending on the value in the DLC field.

CAN mailbox data low register (CAN_TDLxR) (x = 0..2)

All bits of this register are write protected when the mailbox is not in empty state.

Address offsets: 0x188, 0x198, 0x1A8
Reset value: 0xXXXX XXXX

31	30	29	28	27	26	25	24	23	22	21	20	19	18	17	16
DATA3[7:0]								DATA2[7:0]							
rw	rw	rw	rw	rw	rw	rw	rw	rw	rw	rw	rw	rw	rw	rw	rw
15	14	13	12	11	10	9	8	7	6	5	4	3	2	1	0
DATA1[7:0]								DATA0[7:0]							
rw	rw	rw	rw	rw	rw	rw	rw	rw	rw	rw	rw	rw	rw	rw	rw

Bits 31:24 **DATA3[7:0]**: Data byte 3
Data byte 3 of the message.

Bits 23:16 **DATA2[7:0]**: Data byte 2
Data byte 2 of the message.

Bits 15:8 **DATA1[7:0]**: Data byte 1
Data byte 1 of the message.

Bits 7:0 **DATA0[7:0]**: Data byte 0
Data byte 0 of the message.
A message can contain from 0 to 8 data bytes and starts with byte 0.

CAN mailbox data high register (CAN_TDHxR) (x = 0..2)

All bits of this register are write protected when the mailbox is not in empty state.

Address offsets: 0x18C, 0x19C, 0x1AC
Reset value: 0xXXXX XXXX

31	30	29	28	27	26	25	24	23	22	21	20	19	18	17	16
DATA7[7:0]								DATA6[7:0]							
rw	rw	rw	rw	rw	rw	rw	rw	rw	rw	rw	rw	rw	rw	rw	rw
15	14	13	12	11	10	9	8	7	6	5	4	3	2	1	0
DATA5[7:0]								DATA4[7:0]							
rw	rw	rw	rw	rw	rw	rw	rw	rw	rw	rw	rw	rw	rw	rw	rw

Bits 31:24 **DATA7[7:0]**: Data byte 7
Data byte 7 of the message.
Note: If TGT of this message and TTCM are active, DATA7 and DATA6 will be replaced by the TIME stamp value.

Bits 23:16 **DATA6[7:0]**: Data byte 6
Data byte 6 of the message.

Bits 15:8 **DATA5[7:0]**: Data byte 5
Data byte 5 of the message.

Bits 7:0 **DATA4[7:0]**: Data byte 4
Data byte 4 of the message.

CAN receive FIFO mailbox identifier register (CAN_RIxR) (x = 0..1)

Address offsets: 0x1B0, 0x1C0
Reset value: 0xXXXX XXXX

All RX registers are write protected.

31	30	29	28	27	26	25	24	23	22	21	20	19	18	17	16
STID[10:0]/EXID[28:18]											EXID[17:13]				
r	r	r	r	r	r	r	r	r	r	r	r	r	r	r	r

15	14	13	12	11	10	9	8	7	6	5	4	3	2	1	0
EXID[12:0]													IDE	RTR	Res
r	r	r	r	r	r	r	r	r	r	r	r	r	r	r	

Bits 31:21 **STID[10:0]/EXID[28:18]**: Standard identifier or extended identifier
The standard identifier or the MSBs of the extended identifier (depending on the IDE bit value).

Bits 20:3 **EXID[17:0]**: Extended identifier
The LSBs of the extended identifier.

Bit 2 **IDE**: Identifier extension
This bit defines the identifier type of message in the mailbox.
0: Standard identifier.
1: Extended identifier.

Bit 1 **RTR**: Remote transmission request
0: Data frame
1: Remote frame

Bit 0 Reserved, must be kept at reset value.

CAN receive FIFO mailbox data length control and time stamp register (CAN_RDTxR) (x = 0..1)

Address offsets: 0x1B4, 0x1C4
Reset value: 0xXXXX XXXX

All RX registers are write protected.

31	30	29	28	27	26	25	24	23	22	21	20	19	18	17	16
TIME[15:0]															
r	r	r	r	r	r	r	r	r	r	r	r	r	r	r	r
15	14	13	12	11	10	9	8	7	6	5	4	3	2	1	0
FMI[7:0]								Res.	Res.	Res.	Res.	DLC[3:0]			
r	r	r	r	r	r	r	r					r	r	r	r

Bits 31:16 **TIME[15:0]**: Message time stamp
This field contains the 16-bit timer value captured at the SOF detection.

Bits 15:8 **FMI[7:0]**: Filter match index
This register contains the index of the filter the message stored in the mailbox passed through. For more details on identifier filtering refer to *Section 46.7.4: Identifier filtering on page 1639* - **Filter Match Index** paragraph.

Bits 7:4 Reserved, must be kept at reset value.

Bits 3:0 **DLC[3:0]**: Data length code
This field defines the number of data bytes a data frame contains (0 to 8). It is 0 in the case of a remote frame request.

CAN receive FIFO mailbox data low register (CAN_RDLxR) (x = 0..1)

All bits of this register are write protected when the mailbox is not in empty state.

Address offsets: 0x1B8, 0x1C8
Reset value: 0xXXXX XXXX

All RX registers are write protected.

31	30	29	28	27	26	25	24	23	22	21	20	19	18	17	16
DATA3[7:0]								DATA2[7:0]							
r	r	r	r	r	r	r	r	r	r	r	r	r	r	r	r
15	14	13	12	11	10	9	8	7	6	5	4	3	2	1	0
DATA1[7:0]								DATA0[7:0]							
r	r	r	r	r	r	r	r	r	r	r	r	r	r	r	r

Bits 31:24 **DATA3[7:0]**: Data Byte 3
Data byte 3 of the message.

Bits 23:16 **DATA2[7:0]**: Data Byte 2
Data byte 2 of the message.

Bits 15:8 **DATA1[7:0]**: Data Byte 1
Data byte 1 of the message.

Bits 7:0 **DATA0[7:0]**: Data Byte 0
Data byte 0 of the message.
A message can contain from 0 to 8 data bytes and starts with byte 0.

CAN receive FIFO mailbox data high register (CAN_RDHxR) (x = 0..1)

Address offsets: 0x1BC, 0x1CC
Reset value: 0xXXXX XXXX

All RX registers are write protected.

31	30	29	28	27	26	25	24	23	22	21	20	19	18	17	16
DATA7[7:0]								DATA6[7:0]							
r	r	r	r	r	r	r	r	r	r	r	r	r	r	r	r
15	14	13	12	11	10	9	8	7	6	5	4	3	2	1	0
DATA5[7:0]								DATA4[7:0]							
r	r	r	r	r	r	r	r	r	r	r	r	r	r	r	r

Bits 31:24 **DATA7[7:0]**: Data Byte 7
Data byte 3 of the message.

Bits 23:16 **DATA6[7:0]**: Data Byte 6
Data byte 2 of the message.

Bits 15:8 **DATA5[7:0]**: Data Byte 5
Data byte 1 of the message.

Bits 7:0 **DATA4[7:0]**: Data Byte 4
Data byte 0 of the message.

46.9.4 CAN filter registers

CAN filter master register (CAN_FMR)

Address offset: 0x200
Reset value: 0x2A1C 0E01

All bits of this register are set and cleared by software.

31	30	29	28	27	26	25	24	23	22	21	20	19	18	17	16
Res.	Res.	Res.	Res.	Res.	Res.	Res.	Res.	Res.	Res.	Res.	Res.	Res.	Res.	Res.	Res.
15	14	13	12	11	10	9	8	7	6	5	4	3	2	1	0
Res.	Res.	CANSB[5:0]						Res.	Res.	Res.	Res.	Res.	Res.	Res.	FINIT
		rw	rw	rw	rw	rw	rw								rw

Bits 31:14 Reserved, must be kept at reset value.

Bits 13:8 **CANSB[5:0]**: CAN start bank
These bits are set and cleared by software. When both CAN are used, they define the start bank of each CAN interface:
000001 = 1 filter assigned to CAN1 and 27 assigned to CAN2
011011 = 27 filters assigned to CAN1 and 1 filter assigned to CAN2
- to assign all filters to one CAN set CANSB value to zero and deactivate the non used CAN
- to use CAN1 only: stop the clock on CAN2 and/or set the CAN_MCR.INRQ on CAN2
- to use CAN2 only: set the CAN_MCR.INRQ on CAN1 or deactivate the interupt register CAN_IER on CAN1

Note: Bits [13:8] are available only for dual CAN peripheral configuration and are reserved for single CAN peripheral configuration.

Bits 7:1 Reserved, must be kept at reset value.

Bit 0 **FINIT**: Filter initialization mode
Initialization mode for filter banks
0: Active filters mode.
1: Initialization mode for the filters.

CAN filter mode register (CAN_FM1R)

Address offset: 0x204
Reset value: 0x0000 0000

This register can be written only when the filter initialization mode is set (FINIT=1) in the CAN_FMR register.

31	30	29	28	27	26	25	24	23	22	21	20	19	18	17	16
Res.	Res.	Res.	Res.	FBM27	FBM26	FBM25	FBM24	FBM23	FBM22	FBM21	FBM20	FBM19	FBM18	FBM17	FBM16
				rw	rw	rw	rw	rw	rw	rw	rw	rw	rw	rw	rw
15	14	13	12	11	10	9	8	7	6	5	4	3	2	1	0
FBM15	FBM14	FBM13	FBM12	FBM11	FBM10	FBM9	FBM8	FBM7	FBM6	FBM5	FBM4	FBM3	FBM2	FBM1	FBM0
rw	rw	rw	rw	rw	rw	rw	rw	rw	rw	rw	rw	rw	rw	rw	rw

Note: Refer to Figure 522: Filter bank scale configuration - register organization on page 1641.

Bits 31:28 Reserved, must be kept at reset value.

Bits 27:0 **FBM*x***: Filter mode

Mode of the registers of Filter x.
0: Two 32-bit registers of filter bank x are in Identifier Mask mode.
1: Two 32-bit registers of filter bank x are in Identifier List mode.

Note: Bits 27:14 are available for dual CAN configuration and are reserved for single CAN configuration.

CAN filter scale register (CAN_FS1R)

Address offset: 0x20C
Reset value: 0x0000 0000

This register can be written only when the filter initialization mode is set (FINIT=1) in the CAN_FMR register.

31	30	29	28	27	26	25	24	23	22	21	20	19	18	17	16
Res.	Res.	Res.	Res.	FSC27	FSC26	FSC25	FSC24	FSC23	FSC22	FSC21	FSC20	FSC19	FSC18	FSC17	FSC16
				rw	rw	rw	rw	rw	rw	rw	rw	rw	rw	rw	rw
15	14	13	12	11	10	9	8	7	6	5	4	3	2	1	0
FSC15	FSC14	FSC13	FSC12	FSC11	FSC10	FSC9	FSC8	FSC7	FSC6	FSC5	FSC4	FSC3	FSC2	FSC1	FSC0
rw	rw	rw	rw	rw	rw	rw	rw	rw	rw	rw	rw	rw	rw	rw	rw

Bits 31:28 Reserved, must be kept at reset value.

Bits 27:0 **FSCx**: Filter scale configuration

These bits define the scale configuration of Filters 27-0.
0: Dual 16-bit scale configuration
1: Single 32-bit scale configuration

Note: Bits 27:14 are available for dual CAN configuration and are reserved for single CAN configuration.

Note: Refer to Figure 522: Filter bank scale configuration - register organization on page 1641.

CAN filter FIFO assignment register (CAN_FFA1R)

Address offset: 0x214
Reset value: 0x0000 0000

This register can be written only when the filter initialization mode is set (FINIT=1) in the CAN_FMR register.

31	30	29	28	27	26	25	24	23	22	21	20	19	18	17	16
Res.	Res.	Res.	Res.	FFA27	FFA26	FFA25	FFA24	FFA23	FFA22	FFA21	FFA20	FFA19	FFA18	FFA17	FFA16
				rw	rw	rw	rw	rw	rw	rw	rw	rw	rw	rw	rw
15	14	13	12	11	10	9	8	7	6	5	4	3	2	1	0
FFA15	FFA14	FFA13	FFA12	FFA11	FFA10	FFA9	FFA8	FFA7	FFA6	FFA5	FFA4	FFA3	FFA2	FFA1	FFA0
rw	rw	rw	rw	rw	rw	rw	rw	rw	rw	rw	rw	rw	rw	rw	rw

Bits 31:28 Reserved, must be kept at reset value.

Bits 27:0 **FFA*x***: Filter FIFO assignment for filter x

The message passing through this filter will be stored in the specified FIFO.
0: Filter assigned to FIFO 0
1: Filter assigned to FIFO 1

Note: Bits 27:14 are available for dual CAN configuration and are reserved for single CAN configuration.

CAN filter activation register (CAN_FA1R)

Address offset: 0x21C
Reset value: 0x0000 0000

31	30	29	28	27	26	25	24	23	22	21	20	19	18	17	16
Res.	Res.	Res.	Res.	FACT 27	FACT 26	FACT 25	FACT 24	FACT 23	FACT 22	FACT 21	FACT 20	FACT 19	FACT 18	FACT 17	FACT 16
				rw	rw	rw	rw	rw	rw	rw	rw	rw	rw	rw	rw
15	14	13	12	11	10	9	8	7	6	5	4	3	2	1	0
FACT 15	FACT 14	FACT 13	FACT 12	FACT 11	FACT 10	FACT9	FACT8	FACT7	FACT6	FACT5	FACT4	FACT3	FACT2	FACT1	FACT0
rw	rw	rw	rw	rw	rw	rw	rw	rw	rw	rw	rw	rw	rw	rw	rw

Bits 31:28 Reserved, must be kept at reset value.

Bits 27:0 **FACT*x***: Filter active

The software sets this bit to activate Filter x. To modify the Filter x registers (CAN_FxR[0:7]), the FACTx bit must be cleared or the FINIT bit of the CAN_FMR register must be set.
0: Filter x is not active
1: Filter x is active

Note: Bits 27:14 are available for dual CAN configuration and are reserved for single CAN configuration.

Filter bank i register x (CAN_FiRx) (i = 0..27, x = 1, 2)

Address offsets: 0x240 to 0x31C
Reset value: 0xXXXX XXXX

Depending on CAN peripheral configuration there *are* 28 *filter banks,* in dual CAN or 14 filter banks in single CAN configuration. Each filter bank i (i= 0 to 27 in dual CAN configuration and i= 0 to 13 in single CAN configuration) is composed of two 32-bit registers, CAN_FiR[2:1].

This register can only be modified when the FACTx bit of the CAN_FAxR register is cleared or when the FINIT bit of the CAN_FMR register is set.

31	30	29	28	27	26	25	24	23	22	21	20	19	18	17	16
FB31	FB30	FB29	FB28	FB27	FB26	FB25	FB24	FB23	FB22	FB21	FB20	FB19	FB18	FB17	FB16
rw	rw	rw	rw	rw	rw	rw	rw	rw	rw	rw	rw	rw	rw	rw	rw
15	14	13	12	11	10	9	8	7	6	5	4	3	2	1	0
FB15	FB14	FB13	FB12	FB11	FB10	FB9	FB8	FB7	FB6	FB5	FB4	FB3	FB2	FB1	FB0
rw	rw	rw	rw	rw	rw	rw	rw	rw	rw	rw	rw	rw	rw	rw	rw

In all configurations:

Bits 31:0 **FB[31:0]**: Filter bits

Identifier
Each bit of the register specifies the level of the corresponding bit of the expected identifier.
0: Dominant bit is expected
1: Recessive bit is expected

Mask
Each bit of the register specifies whether the bit of the associated identifier register must match with the corresponding bit of the expected identifier or not.
0: Do not care, the bit is not used for the comparison
1: Must match, the bit of the incoming identifier must have the same level has specified in the corresponding identifier register of the filter.

Note: Depending on the scale and mode configuration of the filter the function of each register can differ. For the filter mapping, functions description and mask registers association, refer to Section 46.7.4: Identifier filtering on page 1639.

A Mask/Identifier register in **mask mode** has the same bit mapping as in **identifier list** mode.

For the register mapping/addresses of the filter banks refer to Table 315 on page 1670.

46.9.5 bxCAN register map

Refer to *Section 2.2 on page 75* for the register boundary addresses. The registers from offset 0x200 to 0x31C are present only in CAN1.

Table 315. bxCAN register map and reset values

Offset	Register	31	30	29	28	27	26	25	24	23	22	21	20	19	18	17	16	15	14	13	12	11	10	9	8	7	6	5	4	3	2	1	0
0x000	**CAN_MCR**	Res.	Res.	Res.	Res.	Res.	Res.	Res.	Res.	Res.	Res.	Res.	Res.	Res.	Res.	Res.	DBF	RESET	Res.	Res.	Res.	Res.	Res.	Res.	Res.	TTCM	ABOM	AWUM	NART	RFLM	TXFP	SLEEP	INRQ
	Reset value																1	0								0	0	0	0	0	0	1	0
0x004	**CAN_MSR**	Res.	Res.	Res.	Res.	Res.	Res.	Res.	Res.	Res.	Res.	Res.	Res.	Res.	Res.	Res.	Res.	Res.	Res.	Res.	Res.	RX	SAMP	RXM	TXM	Res.	Res.	Res.	SLAKI	WKUI	ERRI	SLAK	INAK
	Reset value																					1	1	0	0				0	0	0	1	0
0x008	**CAN_TSR**	LOW[2:0]			TME[2:0]			CODE[1:0]		ABRQ2	Res.	Res.	Res.	TERR2	ALST2	TXOK2	RQCP2	ABRQ1	Res.	Res.	Res.	TERR1	ALST1	TXOK1	RQCP1	ABRQ0	Res.	Res.	Res.	TERR0	ALST0	TXOK0	RQCP0
	Reset value	0	0	0	1	1	1	0	0	0				0	0	0	0	0				0	0	0	0	0				0	0	0	0
0x00C	**CAN_RF0R**	Res.	Res.	Res.	Res.	Res.	Res.	Res.	Res.	Res.	Res.	Res.	Res.	Res.	Res.	Res.	Res.	Res.	Res.	Res.	Res.	Res.	Res.	Res.	Res.	Res.	Res.	RFOM0	FOVR0	FULL0	Res.	FMP0[1:0]	
	Reset value																											0	0	0		0	0
0x010	**CAN_RF1R**	Res.	Res.	Res.	Res.	Res.	Res.	Res.	Res.	Res.	Res.	Res.	Res.	Res.	Res.	Res.	Res.	Res.	Res.	Res.	Res.	Res.	Res.	Res.	Res.	Res.	Res.	RFOM1	FOVR1	FULL1	Res.	FMP1[1:0]	
	Reset value																											0	0	0		0	0
0x014	**CAN_IER**	Res.	Res.	Res.	Res.	Res.	Res.	Res.	Res.	Res.	Res.	Res.	Res.	Res.	Res.	SLKIE	WKUIE	ERRIE	Res.	Res.	Res.	LECIE	BOFIE	EPVIE	EWGIE	Res.	FOVIE1	FFIE1	FMPIE1	FOVIE0	FFIE0	FMPIE0	TMEIE
	Reset value															0	0	0				0	0	0	0		0	0	0	0	0	0	0
0x018	**CAN_ESR**	REC[7:0]								TEC[7:0]								Res.	Res.	Res.	Res.	Res.	Res.	Res.	Res.	Res.	LEC[2:0]			Res.	BOFF	EPVF	EWGF
	Reset value	0	0	0	0	0	0	0	0	0	0	0	0	0	0	0	0										0	0	0		0	0	0
0x01C	**CAN_BTR**	SILM	LBKM	Res.	Res.	Res.	Res.	SJW[1:0]		Res.	TS2[2:0]			TS1[3:0]				Res.	Res.	Res.	Res.	Res.	Res.	BRP[9:0]									
	Reset value	0	0					0	0		0	1	0	0	0	1	1							0	0	0	0	0	0	0	0	0	0
0x020-0x17F	-	Res.	Res.	Res.	Res.	Res.	Res.	Res.	Res.	Res.	Res.	Res.	Res.	Res.	Res.	Res.	Res.	Res.	Res.	Res.	Res.	Res.	Res.	Res.	Res.	Res.	Res.	Res.	Res.	Res.	Res.	Res.	Res.
0x180	**CAN_TI0R**	STID[10:0]/EXID[28:18]											EXID[17:0]																		IDE	RTR	TXRQ
	Reset value	x	x	x	x	x	x	x	x	x	x	x	x	x	x	x	x	x	x	x	x	x	x	x	x	x	x	x	x	x	x	x	0

Table 315. bxCAN register map and reset values (continued)

Offset	Register	31	30	29	28	27	26	25	24	23	22	21	20	19	18	17	16	15	14	13	12	11	10	9	8	7	6	5	4	3	2	1	0
0x184	**CAN_TDT0R**	TIME[15:0]																Res.	Res.	Res.	Res.	Res.	Res.	Res.	TGT	Res.	Res.	Res.	Res.	DLC[3:0]			
	Reset value	x	x	x	x	x	x	x	x	x	x	x	x	x	x	x	x	-	-	-	-	-	-	-	x	-	-	-	-	x	x	x	x
0x188	**CAN_TDL0R**	DATA3[7:0]								DATA2[7:0]								DATA1[7:0]								DATA0[7:0]							
	Reset value	x	x	x	x	x	x	x	x	x	x	x	x	x	x	x	x	x	x	x	x	x	x	x	x	x	x	x	x	x	x	x	x
0x18C	**CAN_TDH0R**	DATA7[7:0]								DATA6[7:0]								DATA5[7:0]								DATA4[7:0]							
	Reset value	x	x	x	x	x	x	x	x	x	x	x	x	x	x	x	x	x	x	x	x	x	x	x	x	x	x	x	x	x	x	x	x
0x190	**CAN_TI1R**	STID[10:0]/EXID[28:18]											EXID[17:0]																		IDE	RTR	TXRQ
	Reset value	x	x	x	x	x	x	x	x	x	x	x	x	x	x	x	x	x	x	x	x	x	x	x	x	x	x	x	x	x	x	x	0
0x194	**CAN_TDT1R**	TIME[15:0]																Res.	Res.	Res.	Res.	Res.	Res.	Res.	TGT	Res.	Res.	Res.	Res.	DLC[3:0]			
	Reset value	x	x	x	x	x	x	x	x	x	x	x	x	x	x	x	x	-	-	-	-	-	-	-	x	-	-	-	-	x	x	x	x
0x198	**CAN_TDL1R**	DATA3[7:0]								DATA2[7:0]								DATA1[7:0]								DATA0[7:0]							
	Reset value	x	x	x	x	x	x	x	x	x	x	x	x	x	x	x	x	x	x	x	x	x	x	x	x	x	x	x	x	x	x	x	x
0x19C	**CAN_TDH1R**	DATA7[7:0]								DATA6[7:0]								DATA5[7:0]								DATA4[7:0]							
	Reset value	x	x	x	x	x	x	x	x	x	x	x	x	x	x	x	x	x	x	x	x	x	x	x	x	x	x	x	x	x	x	x	x
0x1A0	**CAN_TI2R**	STID[10:0]/EXID[28:18]											EXID[17:0]																		IDE	RTR	TXRQ
	Reset value	x	x	x	x	x	x	x	x	x	x	x	x	x	x	x	x	x	x	x	x	x	x	x	x	x	x	x	x	x	x	x	0
0x1A4	**CAN_TDT2R**	TIME[15:0]																Res.	Res.	Res.	Res.	Res.	Res.	Res.	TGT	Res.	Res.	Res.	Res.	DLC[3:0]			
	Reset value	x	x	x	x	x	x	x	x	x	x	x	x	x	x	x	x	-	-	-	-	-	-	-	x	-	-	-	-	x	x	x	x
0x1A8	**CAN_TDL2R**	DATA3[7:0]								DATA2[7:0]								DATA1[7:0]								DATA0[7:0]							
	Reset value	x	x	x	x	x	x	x	x	x	x	x	x	x	x	x	x	x	x	x	x	x	x	x	x	x	x	x	x	x	x	x	x
0x1AC	**CAN_TDH2R**	DATA7[7:0]								DATA6[7:0]								DATA5[7:0]								DATA4[7:0]							
	Reset value	x	x	x	x	x	x	x	x	x	x	x	x	x	x	x	x	x	x	x	x	x	x	x	x	x	x	x	x	x	x	x	x
0x1B0	**CAN_RI0R**	STID[10:0]/EXID[28:18]											EXID[17:0]																		IDE	RTR	Res.
	Reset value	x	x	x	x	x	x	x	x	x	x	x	x	x	x	x	x	x	x	x	x	x	x	x	x	x	x	x	x	x	x	x	-

Table 315. bxCAN register map and reset values (continued)

Offset	Register	31	30	29	28	27	26	25	24	23	22	21	20	19	18	17	16	15	14	13	12	11	10	9	8	7	6	5	4	3	2	1	0
0x1B4	**CAN_RDT0R**	TIME[15:0]																FMI[7:0]								Res.	Res.	Res.	Res.	DLC[3:0]			
	Reset value	x	x	x	x	x	x	x	x	x	x	x	x	x	x	x	x	x	x	x	x	x	x	x	x	-	-	-	-	x	x	x	x
0x1B8	**CAN_RDL0R**	DATA3[7:0]								DATA2[7:0]								DATA1[7:0]								DATA0[7:0]							
	Reset value	x	x	x	x	x	x	x	x	x	x	x	x	x	x	x	x	x	x	x	x	x	x	x	x	x	x	x	x	x	x	x	x
0x1BC	**CAN_RDH0R**	DATA7[7:0]								DATA6[7:0]								DATA5[7:0]								DATA4[7:0]							
	Reset value	x	x	x	x	x	x	x	x	x	x	x	x	x	x	x	x	x	x	x	x	x	x	x	x	x	x	x	x	x	x	x	x
0x1C0	**CAN_RI1R**	STID[10:0]/EXID[28:18]											EXID[17:0]																		IDE	RTR	Res.
	Reset value	x	x	x	x	x	x	x	x	x	x	x	x	x	x	x	x	x	x	x	x	x	x	x	x	x	x	x	x	x	x	x	-
0x1C4	**CAN_RDT1R**	TIME[15:0]																FMI[7:0]								Res.	Res.	Res.	Res.	DLC[3:0]			
	Reset value	x	x	x	x	x	x	x	x	x	x	x	x	x	x	x	x	x	x	x	x	x	x	x	x	-	-	-	-	x	x	x	x
0x1C8	**CAN_RDL1R**	DATA3[7:0]								DATA2[7:0]								DATA1[7:0]								DATA0[7:0]							
	Reset value	x	x	x	x	x	x	x	x	x	x	x	x	x	x	x	x	x	x	x	x	x	x	x	x	x	x	x	x	x	x	x	x
0x1CC	**CAN_RDH1R**	DATA7[7:0]								DATA6[7:0]								DATA5[7:0]								DATA4[7:0]							
	Reset value	x	x	x	x	x	x	x	x	x	x	x	x	x	x	x	x	x	x	x	x	x	x	x	x	x	x	x	x	x	x	x	x
0x1D0-0x1FF	-	Res.	Res.	Res.	Res.	Res.	Res.	Res.	Res.	Res.	Res.	Res.	Res.	Res.	Res.	Res.	Res.	Res.	Res.	Res.	Res.	Res.	Res.	Res.	Res.	Res.	Res.	Res.	Res.	Res.	Res.	Res.	Res.
0x200	**CAN_FMR**	Res.	Res.	Res.	Res.	Res.	Res.	Res.	Res.	Res.	Res.	Res.	Res.	Res.	Res.	Res.	Res.	Res.	Res.	CANSB[5:0]						Res.	Res.	Res.	Res.	Res.	Res.	Res.	FINIT
	Reset value																			0	0	1	1	1	0								1
0x204	**CAN_FM1R**	Res.	Res.	Res.	Res.	FBM[27:0]																											
	Reset value					0	0	0	0	0	0	0	0	0	0	0	0	0	0	0	0	0	0	0	0	0	0	0	0	0	0	0	0
0x208	-	Res.	Res.	Res.	Res.	Res.	Res.	Res.	Res.	Res.	Res.	Res.	Res.	Res.	Res.	Res.	Res.	Res.	Res.	Res.	Res.	Res.	Res.	Res.	Res.	Res.	Res.	Res.	Res.	Res.	Res.	Res.	Res.
	-																																
0x20C	**CAN_FS1R**	Res.	Res.	Res.	Res.	FSC[27:0]																											
	Reset value					0	0	0	0	0	0	0	0	0	0	0	0	0	0	0	0	0	0	0	0	0	0	0	0	0	0	0	0
0x210	-	Res.	Res.	Res.	Res.	Res.	Res.	Res.	Res.	Res.	Res.	Res.	Res.	Res.	Res.	Res.	Res.	Res.	Res.	Res.	Res.	Res.	Res.	Res.	Res.	Res.	Res.	Res.	Res.	Res.	Res.	Res.	Res.

Table 315. bxCAN register map and reset values (continued)

Offset	Register	31	30	29	28	27	26	25	24	23	22	21	20	19	18	17	16	15	14	13	12	11	10	9	8	7	6	5	4	3	2	1	0
0x214	**CAN_FFA1R**	Res.	Res.	Res.	Res.	FFA[27:0]																											
	Reset value					0	0	0	0	0	0	0	0	0	0	0	0	0	0	0	0	0	0	0	0	0	0	0	0	0	0	0	0
0x218	-	Res.	Res.	Res.	Res.	Res.	Res.	Res.	Res.	Res.	Res.	Res.	Res.	Res.	Res.	Res.	Res.	Res.	Res.	Res.	Res.	Res.	Res.	Res.	Res.	Res.	Res.	Res.	Res.	Res.	Res.	Res.	Res.
0x21C	**CAN_FA1R**	Res.	Res.	Res.	Res.	FACT[27:0]																											
	Reset value					0	0	0	0	0	0	0	0	0	0	0	0	0	0	0	0	0	0	0	0	0	0	0	0	0	0	0	0
0x220	-	Res.	Res.	Res.	Res.	Res.	Res.	Res.	Res.	Res.	Res.	Res.	Res.	Res.	Res.	Res.	Res.	Res.	Res.	Res.	Res.	Res.	Res.	Res.	Res.	Res.	Res.	Res.	Res.	Res.	Res.	Res.	Res.
0x224-0x23F	-	Res.	Res.	Res.	Res.	Res.	Res.	Res.	Res.	Res.	Res.	Res.	Res.	Res.	Res.	Res.	Res.	Res.	Res.	Res.	Res.	Res.	Res.	Res.	Res.	Res.	Res.	Res.	Res.	Res.	Res.	Res.	Res.
0x240	**CAN_F0R1**	FB[31:0]																															
	Reset value	x	x	x	x	x	x	x	x	x	x	x	x	x	x	x	x	x	x	x	x	x	x	x	x	x	x	x	x	x	x	x	x
0x244	**CAN_F0R2**	FB[31:0]																															
	Reset value	x	x	x	x	x	x	x	x	x	x	x	x	x	x	x	x	x	x	x	x	x	x	x	x	x	x	x	x	x	x	x	x
0x248	**CAN_F1R1**	FB[31:0]																															
	Reset value	x	x	x	x	x	x	x	x	x	x	x	x	x	x	x	x	x	x	x	x	x	x	x	x	x	x	x	x	x	x	x	x
0x24C	**CAN_F1R2**	FB[31:0]																															
	Reset value	x	x	x	x	x	x	x	x	x	x	x	x	x	x	x	x	x	x	x	x	x	x	x	x	x	x	x	x	x	x	x	x
. . . .	. . . .	. . . .																															
0x318	**CAN_F27R1**	FB[31:0]																															
	Reset value	x	x	x	x	x	x	x	x	x	x	x	x	x	x	x	x	x	x	x	x	x	x	x	x	x	x	x	x	x	x	x	x
0x31C	**CAN_F27R2**	FB[31:0]																															
	Reset value	x	x	x	x	x	x	x	x	x	x	x	x	x	x	x	x	x	x	x	x	x	x	x	x	x	x	x	x	x	x	x	x

Refer to *Section 2.2 on page 75* for the register boundary addresses.

47 USB on-the-go full-speed (OTG_FS)

This section applies to STM32L4x5/L4x6 devices only.

47.1 Introduction

Portions Copyright (c) Synopsys, Inc. All rights reserved. Used with permission.

This section presents the architecture and the programming model of the OTG_FS controller.

The following acronyms are used throughout the section:

FS	Full-speed
LS	Low-speed
MAC	Media access controller
OTG	On-the-go
PFC	Packet FIFO controller
PHY	Physical layer
USB	Universal serial bus
UTMI	USB 2.0 Transceiver Macrocell interface (UTMI)
ADP	Attach detection protocol
LPM	Link power management
BCD	Battery charging detector
HNP	Host negotiation protocol
SRP	Session request protocol

References are made to the following documents:

- USB On-The-Go Supplement, Revision 2.0
- Universal Serial Bus Revision 2.0 Specification
- USB 2.0 Link Power Management Addendum Engineering Change Notice to the USB 2.0 specification, July 16, 2007
- Errata for USB 2.0 ECN: Link Power Management (LPM) - 7/2007
- Battery Charging Specification, Revision 1.2

The USB OTG is a dual-role device (DRD) controller that supports both device and host functions and is fully compliant with the *On-The-Go Supplement to the USB 2.0 Specification*. It can also be configured as a host-only or device-only controller, fully compliant with the *USB 2.0 Specification.* OTG_FS supports the speeds defined in the *Table 316: OTG_FS speeds supported* below. The USB OTG supports both HNP and SRP. The only external device required is a charge pump for V_{BUS} in OTG mode.

Table 316. OTG_FS speeds supported

-	HS (480 Mb/s)	FS (12 Mb/s)	LS (1.5 Mb/s)
Host mode	-	X	X
Device mode	-	X	-

47.2 OTG_FS main features

The main features can be divided into three categories: general, host-mode and device-mode features.

47.2.1 General features

The OTG_FS interface general features are the following:

- It is USB-IF certified to the Universal Serial Bus Specification Rev 2.0
- It includes full support (PHY) for the optional On-The-Go (OTG) protocol detailed in the On-The-Go Supplement Rev 2.0 specification
  - Integrated support for A-B device identification (ID line)
  - Integrated support for host Negotiation protocol (HNP) and session request protocol (SRP)
  - It allows host to turn V_{BUS} off to conserve battery power in OTG applications
  - It supports OTG monitoring of V_{BUS} levels with internal comparators
  - It supports dynamic host-peripheral switch of role
- It is software-configurable to operate as:
  - SRP capable USB FS Peripheral (B-device)
  - SRP capable USB FS/LS host (A-device)
  - USB On-The-Go Full-Speed Dual Role device
- It supports FS SOF and LS Keep-alives with
  - SOF pulse PAD connectivity
  - SOF pulse internal connection to timer (TIMx)
  - Configurable framing period
  - Configurable end of frame interrupt
- It includes power saving features such as system stop during USB suspend, switch-off of clock domains internal to the digital core, PHY and DFIFO power management.
- It features a dedicated RAM of 1.25 Kbytes with advanced FIFO control:
  - Configurable partitioning of RAM space into different FIFOs for flexible and efficient use of RAM
  - Each FIFO can hold multiple packets
  - Dynamic memory allocation
  - Configurable FIFO sizes that are not powers of 2 to allow the use of contiguous memory locations
- It guarantees max USB bandwidth for up to one frame (1 ms) without system intervention.
- It supports charging port detection as described in Battery Charging Specification Revision 1.2 on the FS PHY transceiver only.
- It supports attach detection protocol (ADP).

47.2.2 Host-mode features

The OTG_FS interface main features and requirements in host-mode are the following:

- External charge pump for V_{BUS} voltage generation.
- Up to 12 host channels (pipes): each channel is dynamically reconfigurable to allocate any type of USB transfer.
- Built-in hardware scheduler holding:
  - Up to 12 interrupt plus isochronous transfer requests in the periodic hardware queue
  - Up to 12 control plus bulk transfer requests in the non-periodic hardware queue
- Management of a shared Rx FIFO, a periodic Tx FIFO and a nonperiodic Tx FIFO for efficient usage of the USB data RAM.

47.2.3 Peripheral-mode features

The OTG_FS interface main features in peripheral-mode are the following:

- 1 bidirectional control endpoint0
- 5 IN endpoints (EPs) configurable to support bulk, interrupt or isochronous transfers
- 5 OUT endpoints configurable to support bulk, interrupt or isochronous transfers
- Management of a shared Rx FIFO and a Tx-OUT FIFO for efficient usage of the USB data RAM
- Management of up to 6 dedicated Tx-IN FIFOs (one for each active IN EP) to put less load on the application
- Support for the soft disconnect feature.

47.3 OTG_FS implementation

Table 317. OTG_FS implementation(1)

USB features	OTG_FS for STM32L47x/L48x	OTG_FS for STM32L49x/L4Ax
Device bidirectional endpoints (including EP0)	6	6
Host mode channels	12	12
Size of dedicated SRAM	1.2 KB	1.2 KB
USB 2.0 link power management (LPM) support	X	X
OTG revision supported	2.0	2.0
Attach detection protocol (ADP) support	X	X
Battery charging detection (BCD) support	X	X
PSRST / ERRATIM / STSPHST / CURMOD bits	-	X

1. “X” = supported, “-” not supported

47.4 OTG_FS functional description

47.4.1 OTG_FS block diagram

Figure 530. OTG_FS full-speed block diagram

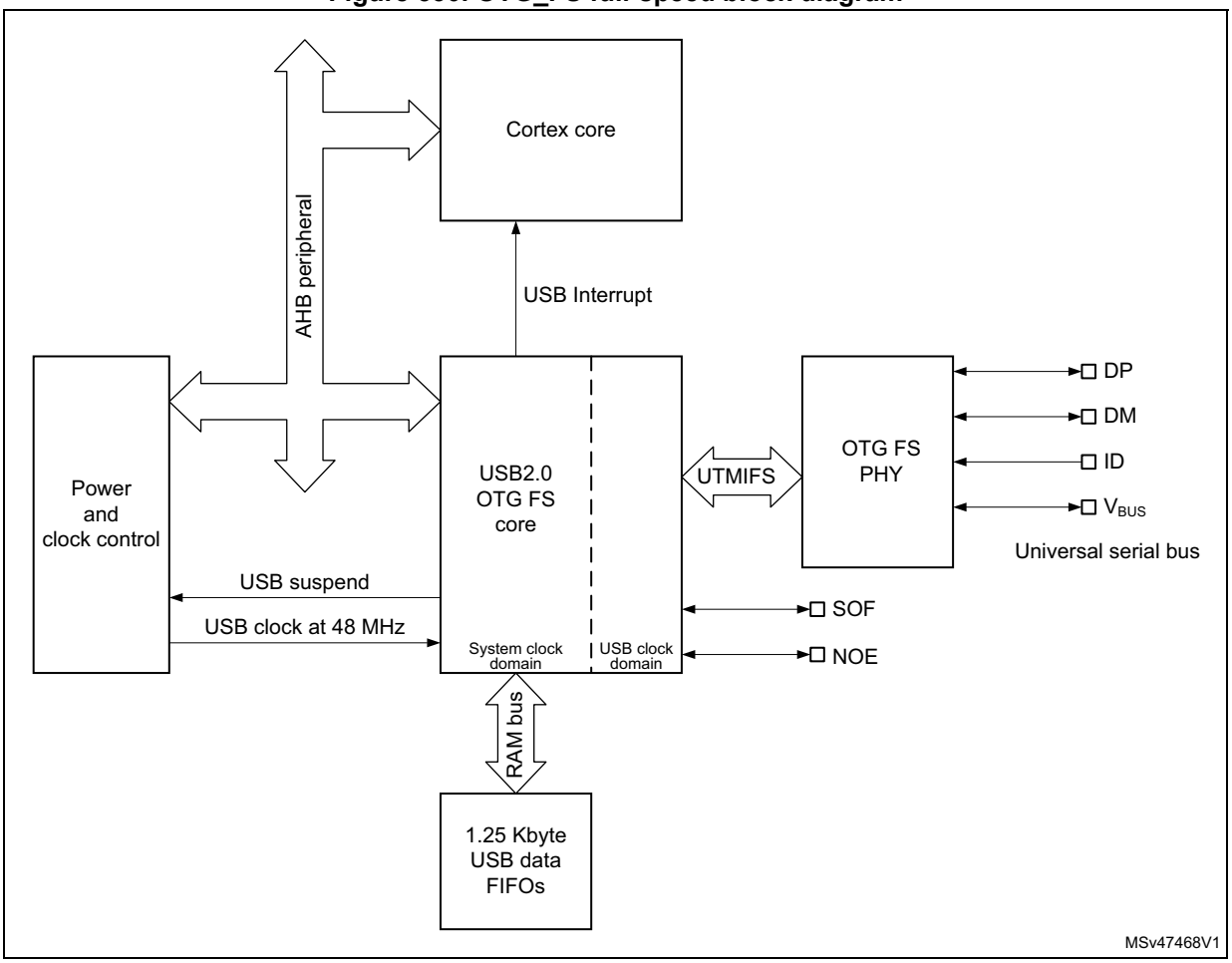

47.4.2 OTG_FS pin and internal signals

Table 318. OTG_FS input/output pins

Signal name	Signal type	Description
OTG_FS_DP	Digital input/output	USB OTG D+ line
OTG_FS_DM	Digital input/output	USB OTG D- line
OTG_FS_ID	Digital input	USB OTG ID
OTG_FS_VBUS	Analog input	USB OTG VBUS
OTG_FS_SOF	Digital output	USB OTG Start Of Frame (visibility)
OTG_FS_NOE	Digital output	USB OTG output enable for D+/D- (visibility)

Table 319. OTG_FS input/output signals

Signal name	Signal type	Description
usb_sof	Digital output	USB OTG start-of-frame event for on chip peripherals
usb_wkup	Digital output	USB OTG wakeup event output
usb_gbl_it	Digital output	USB OTG global interrupt

47.4.3 OTG_FS core

The USB OTG receives the 48 MHz clock from the reset and clock controller (RCC). The USB clock is used for driving the 48 MHz domain at full-speed (12 Mbit/s) and must be enabled prior to configuring the OTG core.

The CPU reads and writes from/to the OTG core registers through the AHB peripheral bus. It is informed of USB events through the single USB OTG interrupt line described in *Section 47.13: OTG_FS interrupts*.

The CPU submits data over the USB by writing 32-bit words to dedicated OTG locations (push registers). The data are then automatically stored into Tx-data FIFOs configured within the USB data RAM. There is one Tx FIFO push register for each in-endpoint (peripheral mode) or out-channel (host mode).

The CPU receives the data from the USB by reading 32-bit words from dedicated OTG addresses (pop registers). The data are then automatically retrieved from a shared Rx FIFO configured within the 1.25-Kbyte USB data RAM. There is one Rx FIFO pop register for each out-endpoint or in-channel.

The USB protocol layer is driven by the serial interface engine (SIE) and serialized over the USB by the transceiver module within the on-chip physical layer (PHY).

47.4.4 Full-speed OTG PHY

The embedded full-speed OTG PHY is controlled by the OTG FS core and conveys USB control & data signals through the full-speed subset of the UTMI+ Bus (UTMIFS). It provides the physical support to USB connectivity.
The full-speed OTG PHY includes the following components:

- FS/LS transceiver module used by both host and device. It directly drives transmission and reception on the single-ended USB lines.
- Integrated ID pull-up resistor used to sample the ID line for A/B device identification.
- DP/DM integrated pull-up and pull-down resistors controlled by the OTG_FS core depending on the current role of the device. As a peripheral, it enables the DP pull-up resistor to signal full-speed peripheral connections as soon as V_{BUS} is sensed to be at a valid level (B-session valid). In host mode, pull-down resistors are enabled on both DP/DM. Pull-up and pull-down resistors are dynamically switched when the role of the device is changed via the host negotiation protocol (HNP).
- Pull-up/pull-down resistor ECN circuit. The DP pull-up consists of two resistors controlled separately from the OTG_FS as per the resistor Engineering Change Notice applied to USB Rev2.0. The dynamic trimming of the DP pull-up strength allows for better noise rejection and Tx/Rx signal quality.
- V_{BUS} sensing comparators with hysteresis used to detect V_{BUS} valid, A-B session valid and session-end voltage thresholds. They are used to drive the session request

protocol (SRP), detect valid startup and end-of-session conditions, and constantly monitor the V_{BUS} supply during USB operations.

- V_{BUS} pulsing method circuit used to charge/discharge V_{BUS} through resistors during the SRP (weak drive).

Caution: To guarantee a correct operation for the USB OTG FS peripheral, the AHB frequency should be higher than 14.2 MHz.

47.5 OTG_FS dual role device (DRD)

Figure 531. OTG_FS A-B device connection

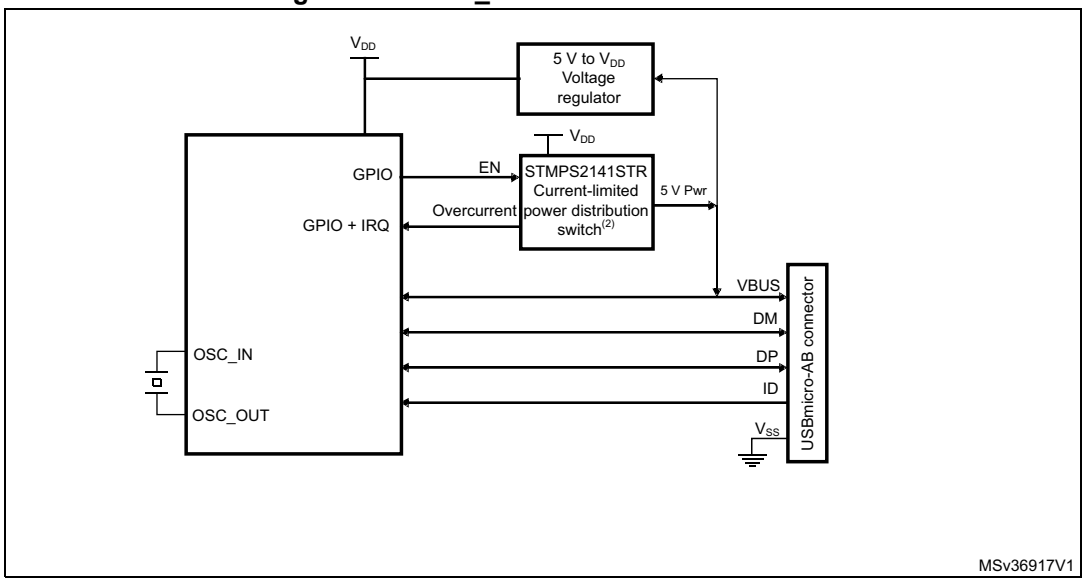

1. External voltage regulator only needed when building a VBUS powered device.
2. STMPS2141STR needed only if the application has to support a VBUS powered device. A basic power switch can be used if 5 V are available on the application board.

47.5.1 ID line detection

The host or peripheral (the default) role is assumed depending on the ID input pin. The ID line status is determined on plugging in the USB cable, depending on whether a MicroA or MicroB plug is connected to the micro-AB receptacle.

- If the B-side of the USB cable is connected with a floating ID wire, the integrated pull-up resistor detects a high ID level and the default peripheral role is confirmed. In this configuration the OTG_FS complies with the standard FSM described in section 4.2.4: ID pin of the On-the-Go specification Rev2.0, supplement to the USB2.0.
- If the A-side of the USB cable is connected with a grounded ID, the OTG_FS issues an ID line status change interrupt (CIDSCHG bit in OTG_GINTSTS) for host software initialization, and automatically switches to the host role. In this configuration the OTG_FS complies with the standard FSM described by section 4.2.4: ID pin of the On-the-Go specification Rev2.0, supplement to the USB2.0.

47.5.2 HNP dual role device

The HNP capable bit in the Global USB configuration register (HNPCAP bit in OTG_GUSBCFG) enables the OTG_FS core to dynamically change its role from A-host to A-peripheral and vice-versa, or from B-Peripheral to B-host and vice-versa according to the host negotiation protocol (HNP). The current device status can be read by the combined values of the connector ID status bit in the Global OTG control and status register (CIDSTS bit in OTG_GOTGCTL) and the current mode of operation bit in the global interrupt and status register (CMOD bit in OTG_GINTSTS).

The HNP program model is described in detail in *Section 47.16: OTG_FS programming model*.

47.5.3 SRP dual role device

The SRP capable bit in the global USB configuration register (SRPCAP bit in OTG_GUSBCFG) enables the OTG_FS core to switch off the generation of V_{BUS} for the A-device to save power. Note that the A-device is always in charge of driving V_{BUS} regardless of the host or peripheral role of the OTG_FS.

The SRP A/B-device program model is described in detail in *Section 47.16: OTG_FS programming model*.

47.6 OTG_FS as a USB peripheral

This section gives the functional description of the OTG_FS in the USB peripheral mode. The OTG_FS works as an USB peripheral in the following circumstances:

- OTG B-Peripheral
  - OTG B-device default state if B-side of USB cable is plugged in
- OTG A-Peripheral
  - OTG A-device state after the HNP switches the OTG_FS to its peripheral role
- B-device
  - If the ID line is present, functional and connected to the B-side of the USB cable, and the HNP-capable bit in the Global USB Configuration register (HNPCAP bit in OTG_GUSBCFG) is cleared.
- Peripheral only (see *Figure 532: USB_FS peripheral-only connection*)
  - The force device mode bit (FDMOD) in the *Section 47.15.4: OTG USB configuration register (OTG_GUSBCFG)* is set to 1, forcing the OTG_FS core to work as an USB peripheral-only. In this case, the ID line is ignored even if it is present on the USB connector.

Note: To build a bus-powered device implementation in case of the B-device or peripheral-only configuration, an external regulator has to be added, that generates the necessary power-supply from V_{BUS}.

Figure 532. USB_FS peripheral-only connection

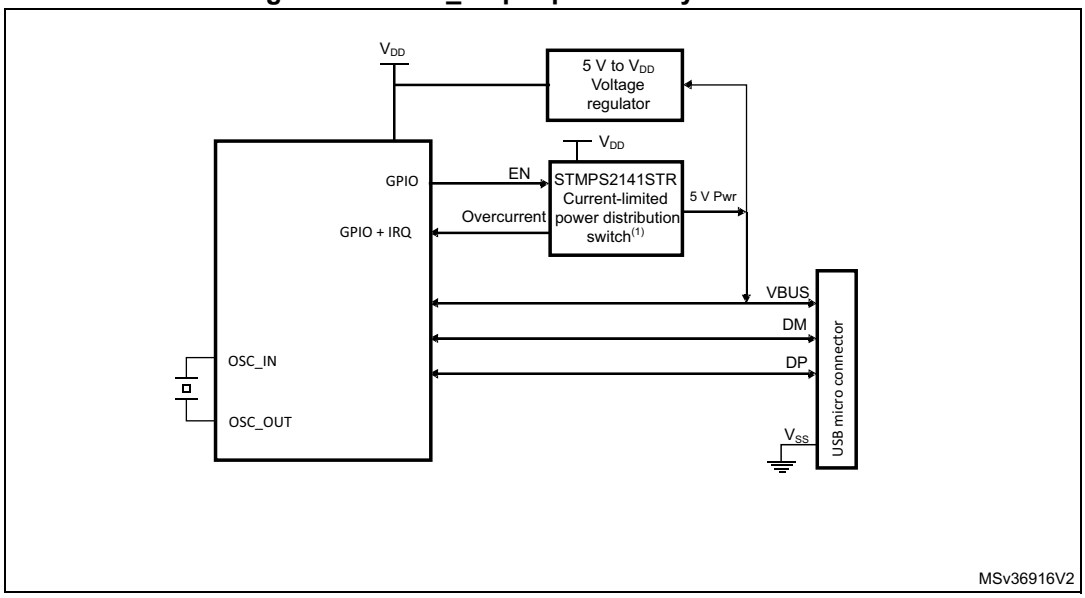

1. Use a regulator to build a bus-powered device.

47.6.1 SRP-capable peripheral

The SRP capable bit in the Global USB configuration register (SRPCAP bit in OTG_GUSBCFG) enables the OTG_FS to support the session request protocol (SRP). In this way, it allows the remote A-device to save power by switching off V_{BUS} while the USB session is suspended.

The SRP peripheral mode program model is described in detail in the *B-device session request protocol* section.

47.6.2 Peripheral states

Powered state

The V_{BUS} input detects the B-session valid voltage by which the USB peripheral is allowed to enter the powered state (see USB2.0 section 9.1). The OTG_FS then automatically connects the DP pull-up resistor to signal full-speed device connection to the host and generates the session request interrupt (SRQINT bit in OTG_GINTSTS) to notify the powered state.

The V_{BUS} input also ensures that valid V_{BUS} levels are supplied by the host during USB operations. If a drop in V_{BUS} below B-session valid happens to be detected (for instance because of a power disturbance or if the host port has been switched off), the OTG_FS automatically disconnects and the session end detected (SEDET bit in OTG_GOTGINT) interrupt is generated to notify that the OTG_FS has exited the powered state.

In the powered state, the OTG_FS expects to receive some reset signaling from the host. No other USB operation is possible. When a reset signaling is received the reset detected interrupt (USBRST in OTG_GINTSTS) is generated. When the reset signaling is complete, the enumeration done interrupt (ENUMDNE bit in OTG_GINTSTS) is generated and the OTG_FS enters the Default state.

Soft disconnect

The powered state can be exited by software with the soft disconnect feature. The DP pull-up resistor is removed by setting the soft disconnect bit in the device control register (SDIS bit in OTG_DCTL), causing a device disconnect detection interrupt on the host side even though the USB cable was not really removed from the host port.

Default state

In the Default state the OTG_FS expects to receive a SET_ADDRESS command from the host. No other USB operation is possible. When a valid SET_ADDRESS command is decoded on the USB, the application writes the corresponding number into the device address field in the device configuration register (DAD bit in OTG_DCFG). The OTG_FS then enters the address state and is ready to answer host transactions at the configured USB address.

Suspended state

The OTG_FS peripheral constantly monitors the USB activity. After counting 3 ms of USB idleness, the early suspend interrupt (ESUSP bit in OTG_GINTSTS) is issued, and confirmed 3 ms later, if appropriate, by the suspend interrupt (USBSUSP bit in OTG_GINTSTS). The device suspend bit is then automatically set in the device status register (SUSPSTS bit in OTG_DSTS) and the OTG_FS enters the suspended state.

The suspended state may optionally be exited by the device itself. In this case the application sets the remote wakeup signaling bit in the device control register (RWUSIG bit in OTG_DCTL) and clears it after 1 to 15 ms.

When a resume signaling is detected from the host, the resume interrupt (WKUPINT bit in OTG_GINTSTS) is generated and the device suspend bit is automatically cleared.

47.6.3 Peripheral endpoints

The OTG_FS core instantiates the following USB endpoints:

- Control endpoint 0:
  - Bidirectional and handles control messages only
  - Separate set of registers to handle in and out transactions
  - Proper control (OTG_DIEPCTL0/OTG_DOEPCTL0), transfer configuration (OTG_DIEPTSIZ0/OTG_DOEPTSIZ0), and status-interrupt (OTG_DIEPINT0/)OTG_DOEPINT0) registers. The available set of bits inside the control and transfer size registers slightly differs from that of other endpoints
- 5 IN endpoints
  - Each of them can be configured to support the isochronous, bulk or interrupt transfer type
  - Each of them has proper control (OTG_DIEPCTL*x*), transfer configuration (OTG_DIEPTSIZ*x*), and status-interrupt (OTG_DIEPINT*x*) registers
  - The device IN endpoints common interrupt mask register (OTG_DIEPMSK) is available to enable/disable a single kind of endpoint interrupt source on all of the IN endpoints (EP0 included)
  - Support for incomplete isochronous IN transfer interrupt (IISOIXFR bit in OTG_GINTSTS), asserted when there is at least one isochronous IN endpoint on

which the transfer is not completed in the current frame. This interrupt is asserted along with the end of periodic frame interrupt (OTG_GINTSTS/EOPF).

- 5 OUT endpoints
  - Each of them can be configured to support the isochronous, bulk or interrupt transfer type
  - Each of them has a proper control (OTG_DOEPCTL*x*), transfer configuration (OTG_DOEPTSIZ*x*) and status-interrupt (OTG_DOEPINT*x*) register
  - Device OUT endpoints common interrupt mask register (OTG_DOEPMSK) is available to enable/disable a single kind of endpoint interrupt source on all of the OUT endpoints (EP0 included)
  - Support for incomplete isochronous OUT transfer interrupt (INCOMPISOOUT bit in OTG_GINTSTS), asserted when there is at least one isochronous OUT endpoint on which the transfer is not completed in the current frame. This interrupt is asserted along with the end of periodic frame interrupt (OTG_GINTSTS/EOPF).

Endpoint control

- The following endpoint controls are available to the application through the device endpoint-*x* IN/OUT control register (OTG_DIEPCTL*x*/OTG_DOEPCTL*x*):
  - Endpoint enable/disable
  - Endpoint activate in current configuration
  - Program USB transfer type (isochronous, bulk, interrupt)
  - Program supported packet size
  - Program Tx FIFO number associated with the IN endpoint
  - Program the expected or transmitted data0/data1 PID (bulk/interrupt only)
  - Program the even/odd frame during which the transaction is received or transmitted (isochronous only)
  - Optionally program the NAK bit to always negative-acknowledge the host regardless of the FIFO status
  - Optionally program the STALL bit to always stall host tokens to that endpoint
  - Optionally program the SNOOP mode for OUT endpoint not to check the CRC field of received data

Endpoint transfer

The device endpoint-*x* transfer size registers (OTG_DIEPTSIZ*x*/OTG_DOEPTSIZ*x*) allow the application to program the transfer size parameters and read the transfer status. Programming must be done before setting the endpoint enable bit in the endpoint control register. Once the endpoint is enabled, these fields are read-only as the OTG_FS core updates them with the current transfer status.

The following transfer parameters can be programmed:

- Transfer size in bytes
- Number of packets that constitute the overall transfer size

Endpoint status/interrupt

The device endpoint-*x* interrupt registers (OTG_DIEPINT*x*/OTG_DOPEPINT*x)* indicate the status of an endpoint with respect to USB- and AHB-related events. The application must read these registers when the OUT endpoint interrupt bit or the IN endpoint interrupt bit in

the core interrupt register (OEPINT bit in OTG_GINTSTS or IEPINT bit in OTG_GINTSTS, respectively) is set. Before the application can read these registers, it must first read the device all endpoints interrupt (OTG_DAINT) register to get the exact endpoint number for the device endpoint-*x* interrupt register. The application must clear the appropriate bit in this register to clear the corresponding bits in the OTG_DAINT and OTG_GINTSTS registers

The peripheral core provides the following status checks and interrupt generation:

- Transfer completed interrupt, indicating that data transfer was completed on both the application (AHB) and USB sides
- Setup stage has been done (control-out only)
- Associated transmit FIFO is half or completely empty (in endpoints)
- NAK acknowledge has been transmitted to the host (isochronous-in only)
- IN token received when Tx FIFO was empty (bulk-in/interrupt-in only)
- Out token received when endpoint was not yet enabled
- Babble error condition has been detected
- Endpoint disable by application is effective
- Endpoint NAK by application is effective (isochronous-in only)
- More than 3 back-to-back setup packets were received (control-out only)
- Timeout condition detected (control-in only)
- Isochronous out packet has been dropped, without generating an interrupt

47.7 OTG_FS as a USB host

This section gives the functional description of the OTG_FS in the USB host mode. The OTG_FS works as a USB host in the following circumstances:

- OTG A-host
  - OTG A-device default state when the A-side of the USB cable is plugged in
- OTG B-host
  - OTG B-device after HNP switching to the host role
- A-device
  - If the ID line is present, functional and connected to the A-side of the USB cable, and the HNP-capable bit is cleared in the Global USB Configuration register (HNPCAP bit in OTG_GUSBCFG). Integrated pull-down resistors are automatically set on the DP/DM lines.
- Host only
  - The force host mode bit (FHMOD) in the *OTG USB configuration register (OTG_GUSBCFG)* forces the OTG_FS core to work as a USB host-only. In this case, the ID line is ignored even if present on the USB connector. Integrated pull-down resistors are automatically set on the DP/DM lines.

Note: On-chip 5 V V_{BUS} generation is not supported. For this reason, a charge pump or, if 5 V are available on the application board, a basic power switch must be added externally to drive the 5 V V_{BUS} line. The external charge pump can be driven by any GPIO output. This is required for the OTG A-host, A-device and host-only configurations.

Figure 533. USB_FS host-only connection

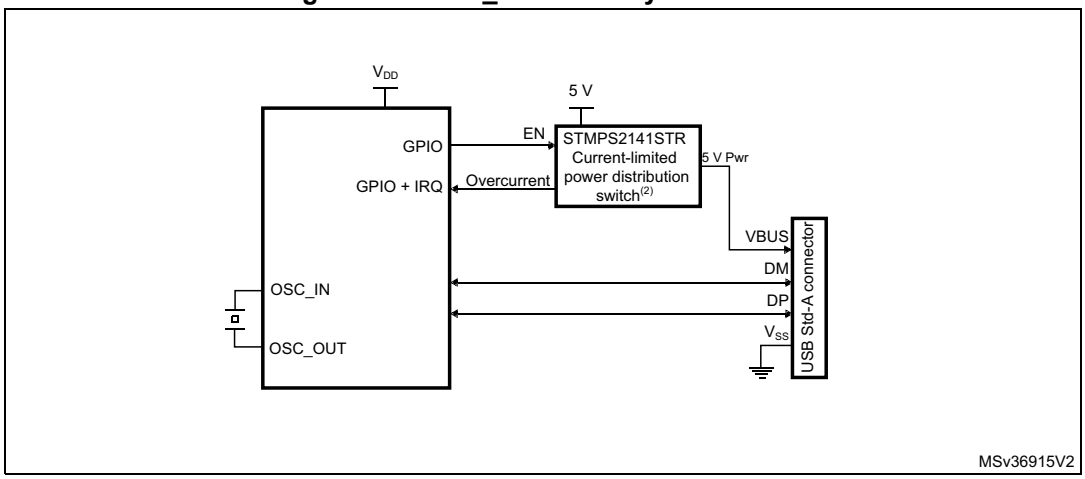

1. V_{DD} range is between 2 V and 3.6 V.

47.7.1 SRP-capable host

SRP support is available through the SRP capable bit in the global USB configuration register (SRPCAP bit in OTG_GUSBCFG). With the SRP feature enabled, the host can save power by switching off the V_{BUS} power while the USB session is suspended.

The SRP host mode program model is described in detail in the *A-device session request protocol*) section.

47.7.2 USB host states

Host port power

On-chip 5 V V_{BUS} generation is not supported. For this reason, a charge pump or, if 5 V are available on the application board, a basic power switch, must be added externally to drive the 5 V V_{BUS} line. The external charge pump can be driven by any GPIO output or via an I^2C interface connected to an external PMIC (power management IC). When the application decides to power on V_{BUS}, it must also set the port power bit in the host port control and status register (PPWR bit in OTG_HPRT).

V_{BUS} valid

When HNP or SRP is enabled the VBUS sensing pin should be connected to V_{BUS}. The V_{BUS} input ensures that valid V_{BUS} levels are supplied by the charge pump during USB operations. Any unforeseen V_{BUS} voltage drop below the V_{BUS} valid threshold (4.4 V) leads to an OTG interrupt triggered by the session end detected bit (SEDET bit in OTG_GOTGINT). The application is then required to remove the V_{BUS} power and clear the port power bit.

When HNP and SRP are both disabled, the VBUS sensing pin does not need to be connected to V_{BUS}.

The charge pump overcurrent flag can also be used to prevent electrical damage. Connect the overcurrent flag output from the charge pump to any GPIO input and configure it to generate a port interrupt on the active level. The overcurrent ISR must promptly disable the V_{BUS} generation and clear the port power bit.

Host detection of a peripheral connection

If SRP or HNP are enabled, even if USB peripherals or B-devices can be attached at any time, the OTG_FS will not detect any bus connection until V_{BUS} is no longer sensed at a valid level (5 V). When V_{BUS} is at a valid level and a remote B-device is attached, the OTG_FS core issues a host port interrupt triggered by the device connected bit in the host port control and status register (PCDET bit in OTG_HPRT).

When HNP and SRP are both disabled, USB peripherals or B-device are detected as soon as they are connected. The OTG_FS core issues a host port interrupt triggered by the device connected bit in the host port control and status (PCDET bit in OTG_HPRT).

Host detection of peripheral a disconnection

The peripheral disconnection event triggers the disconnect detected interrupt (DISCINT bit in OTG_GINTSTS).

Host enumeration

After detecting a peripheral connection the host must start the enumeration process by sending USB reset and configuration commands to the new peripheral.

Before starting to drive a USB reset, the application waits for the OTG interrupt triggered by the debounce done bit (DBCDNE bit in OTG_GOTGINT), which indicates that the bus is stable again after the electrical debounce caused by the attachment of a pull-up resistor on DP (FS) or DM (LS).

The application drives a USB reset signaling (single-ended zero) over the USB by keeping the port reset bit set in the host port control and status register (PRST bit in OTG_HPRT) for a minimum of 10 ms and a maximum of 20 ms. The application takes care of the timing count and then of clearing the port reset bit.

Once the USB reset sequence has completed, the host port interrupt is triggered by the port enable/disable change bit (PENCHNG bit in OTG_HPRT). This informs the application that the speed of the enumerated peripheral can be read from the port speed field in the host port control and status register (PSPD bit in OTG_HPRT) and that the host is starting to drive SOFs (FS) or Keep alives (LS). The host is now ready to complete the peripheral enumeration by sending peripheral configuration commands.

Host suspend

The application decides to suspend the USB activity by setting the port suspend bit in the host port control and status register (PSUSP bit in OTG_HPRT). The OTG_FS core stops sending SOFs and enters the suspended state.

The suspended state can be optionally exited on the remote device’s initiative (remote wakeup). In this case the remote wakeup interrupt (WKUPINT bit in OTG_GINTSTS) is generated upon detection of a remote wakeup signaling, the port resume bit in the host port control and status register (PRES bit in OTG_HPRT) self-sets, and resume signaling is automatically driven over the USB. The application must time the resume window and then clear the port resume bit to exit the suspended state and restart the SOF.

If the suspended state is exited on the host initiative, the application must set the port resume bit to start resume signaling on the host port, time the resume window and finally clear the port resume bit.

47.7.3 Host channels

The OTG_FS core instantiates 12 host channels. Each host channel supports an USB host transfer (USB pipe). The host is not able to support more than 12 transfer requests at the same time. If more than 12 transfer requests are pending from the application, the host controller driver (HCD) must re-allocate channels when they become available from previous duty, that is, after receiving the transfer completed and channel halted interrupts.

Each host channel can be configured to support in/out and any type of periodic/nonperiodic transaction. Each host channel makes us of proper control (OTG_HCCHAR*x*), transfer configuration (OTG_HCTSIZ*x*) and status/interrupt (OTG_HCINT*x*) registers with associated mask (OTG_HCINTMSK*x*) registers.

Host channel control

- The following host channel controls are available to the application through the host channel-*x* characteristics register (OTG_HCCHAR*x*):
  - Channel enable/disable
  - Program the FS/LS speed of target USB peripheral
  - Program the address of target USB peripheral
  - Program the endpoint number of target USB peripheral
  - Program the transfer IN/OUT direction
  - Program the USB transfer type (control, bulk, interrupt, isochronous)
  - Program the maximum packet size (MPS)
  - Program the periodic transfer to be executed during odd/even frames

Host channel transfer

The host channel transfer size registers (OTG_HCTSIZ*x*) allow the application to program the transfer size parameters, and read the transfer status. Programming must be done before setting the channel enable bit in the host channel characteristics register. Once the endpoint is enabled the packet count field is read-only as the OTG_FS core updates it according to the current transfer status.

- The following transfer parameters can be programmed:
  - transfer size in bytes
  - number of packets making up the overall transfer size
  - initial data PID

Host channel status/interrupt

The host channel-*x* interrupt register (OTG_HCINT*x*) indicates the status of an endpoint with respect to USB- and AHB-related events. The application must read these register when the host channels interrupt bit in the core interrupt register (HCINT bit in OTG_GINTSTS) is set. Before the application can read these registers, it must first read the host all channels interrupt (OTG_HAINT) register to get the exact channel number for the host channel-x interrupt register. The application must clear the appropriate bit in this register to clear the corresponding bits in the OTG_HAINT and OTG_GINTSTS registers.

The mask bits for each interrupt source of each channel are also available in the OTG_HCINTMSKx register.

- The host core provides the following status checks and interrupt generation:
  - Transfer completed interrupt, indicating that the data transfer is complete on both the application (AHB) and USB sides
  - Channel has stopped due to transfer completed, USB transaction error or disable command from the application
  - Associated transmit FIFO is half or completely empty (IN endpoints)
  - ACK response received
  - NAK response received
  - STALL response received
  - USB transaction error due to CRC failure, timeout, bit stuff error, false EOP
  - Babble error
  - frame overrun
  - data toggle error

47.7.4 Host scheduler

The host core features a built-in hardware scheduler which is able to autonomously re-order and manage the USB transaction requests posted by the application. At the beginning of each frame the host executes the periodic (isochronous and interrupt) transactions first, followed by the nonperiodic (control and bulk) transactions to achieve the higher level of priority granted to the isochronous and interrupt transfer types by the USB specification.

The host processes the USB transactions through request queues (one for periodic and one for nonperiodic). Each request queue can hold up to 8 entries. Each entry represents a pending transaction request from the application, and holds the IN or OUT channel number along with other information to perform a transaction on the USB. The order in which the requests are written to the queue determines the sequence of the transactions on the USB interface.

At the beginning of each frame, the host processes the periodic request queue first, followed by the nonperiodic request queue. The host issues an incomplete periodic transfer interrupt (IPXFR bit in OTG_GINTSTS) if an isochronous or interrupt transaction scheduled for the current frame is still pending at the end of the current frame. The OTG_FS core is fully responsible for the management of the periodic and nonperiodic request queues.The periodic transmit FIFO and queue status register (OTG_HPTXSTS) and nonperiodic transmit FIFO and queue status register (OTG_HNPTXSTS) are read-only registers which can be used by the application to read the status of each request queue. They contain:

- The number of free entries currently available in the periodic (nonperiodic) request queue (8 max)
- Free space currently available in the periodic (nonperiodic) Tx FIFO (out-transactions)
- IN/OUT token, host channel number and other status information.

As request queues can hold a maximum of 8 entries each, the application can push to schedule host transactions in advance with respect to the moment they physically reach the SB for a maximum of 8 pending periodic transactions plus 8 pending non-periodic transactions.

To post a transaction request to the host scheduler (queue) the application must check that there is at least 1 entry available in the periodic (nonperiodic) request queue by reading the

PTXQSAV bits in the OTG_HNPTXSTS register or NPTQXSAV bits in the OTG_HNPTXSTS register.

47.8 OTG_FS SOF trigger

Figure 534. SOF connectivity (SOF trigger output to TIM and ITR1 connection)

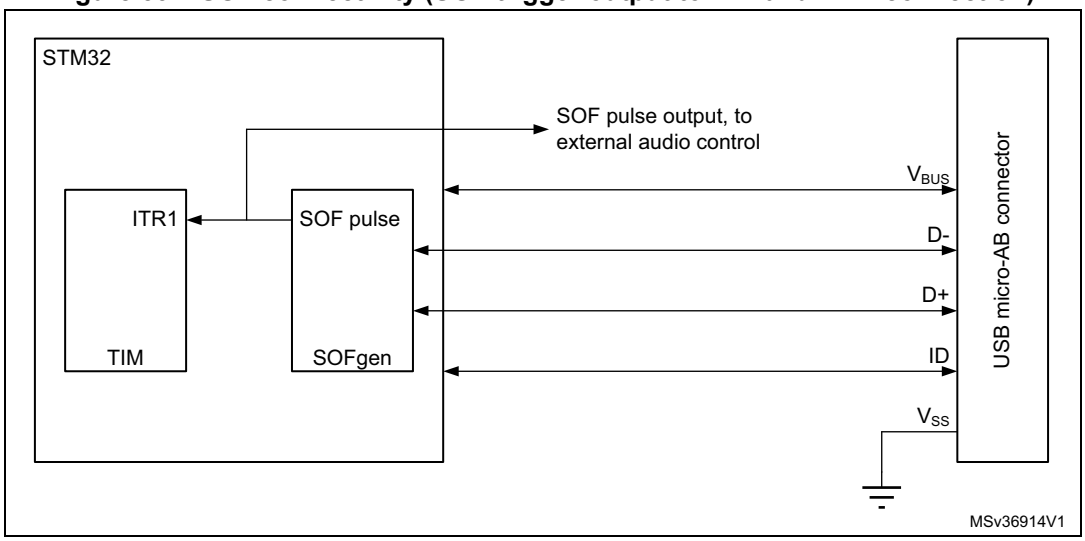

The OTG_FS core provides means to monitor, track and configure SOF framing in the host and peripheral, as well as an SOF pulse output connectivity feature.

Such utilities are especially useful for adaptive audio clock generation techniques, where the audio peripheral needs to synchronize to the isochronous stream provided by the PC, or the host needs to trim its framing rate according to the requirements of the audio peripheral.

47.8.1 Host SOFs

In host mode the number of PHY clocks occurring between the generation of two consecutive SOF (FS) or Keep-alive (LS) tokens is programmable in the host frame interval register (HFIR), thus providing application control over the SOF framing period. An interrupt is generated at any start of frame (SOF bit in OTG_GINTSTS). The current frame number and the time remaining until the next SOF are tracked in the host frame number register (HFNUM).

A SOF pulse signal, is generated at any SOF starting token and with a width of 20 HCLK cycles. The SOF pulse is also internally connected to the input trigger of the timer, so that the input capture feature, the output compare feature and the timer can be triggered by the SOF pulse.

47.8.2 Peripheral SOFs

In device mode, the start of frame interrupt is generated each time an SOF token is received on the USB (SOF bit in OTG_GINTSTS). The corresponding frame number can be read from the device status register (FNSOF bit in OTG_DSTS). A SOF pulse signal with a width of 20 HCLK cycles is also generated.The SOF pulse signal is also internally connected to the TIM input trigger, so that the input capture feature, the output compare feature and the timer can be triggered by the SOF pulse.

The end of periodic frame interrupt (OTG_GINTSTS/EOPF) is used to notify the application when 80%, 85%, 90% or 95% of the time frame interval elapsed depending on the periodic frame interval field in the device configuration register (PFIVL bit in OTG_DCFG). This feature can be used to determine if all of the isochronous traffic for that frame is complete.

47.9 OTG_FS low-power modes

Table 320 below defines the STM32 low power modes and their compatibility with the OTG.

Table 320. Compatibility of STM32 low power modes with the OTG

Mode	Description	USB compatibility
Run	MCU fully active	Required when USB not in suspend state.
Sleep	USB suspend exit causes the device to exit Sleep mode. Peripheral registers content is kept.	Available while USB is in suspend state.
Stop	USB suspend exit causes the device to exit Stop mode. Peripheral registers content is kept(1).	Available while USB is in suspend state.
Standby	Powered-down. The peripheral must be reinitialized after exiting Standby mode.	Not compatible with USB applications.

1. Within Stop mode there are different possible settings. Some restrictions may also exist, please refer to *Section 5: Power control (PWR)* to understand which (if any) restrictions apply when using OTG.

The following bits and procedures reduce power consumption.

The power consumption of the OTG PHY is controlled by two or three bits in the general core configuration register, depending on OTG revision supported.

- PHY power down (OTG_GCCFG/PWRDWN)

  It switches on/off the full-speed transceiver module of the PHY. It must be preliminarily set to allow any USB operation
- V_{BUS} detection enable (OTG_GCCFG/VBDEN)

  It switches on/off the V_{BUS} sensing comparators associated with OTG operations

Power reduction techniques are available while in the USB suspended state, when the USB session is not yet valid or the device is disconnected.

- Stop PHY clock (STPPCLK bit in OTG_PCGCCTL)

  When setting the stop PHY clock bit in the clock gating control register, most of the 48 MHz clock domain internal to the OTG full-speed core is switched off by clock gating. The dynamic power consumption due to the USB clock switching activity is cut even if the 48 MHz clock input is kept running by the application

  Most of the transceiver is also disabled, and only the part in charge of detecting the asynchronous resume or remote wakeup event is kept alive.
- Gate HCLK (GATEHCLK bit in OTG_PCGCCTL)

  When setting the Gate HCLK bit in the clock gating control register, most of the system clock domain internal to the OTG_FS core is switched off by clock gating. Only the register read and write interface is kept alive. The dynamic power consumption due to

the USB clock switching activity is cut even if the system clock is kept running by the application for other purposes.

- USB system stop

  When the OTG_FS is in the USB suspended state, the application may decide to drastically reduce the overall power consumption by a complete shut down of all the clock sources in the system. USB System Stop is activated by first setting the Stop PHY clock bit and then configuring the system deep sleep mode in the power control system module (PWR).

  The OTG_FS core automatically reactivates both system and USB clocks by asynchronous detection of remote wakeup (as an host) or resume (as a device) signaling on the USB.

To save dynamic power, the USB data FIFO is clocked only when accessed by the OTG_FS core.

47.10 OTG_FS Dynamic update of the OTG_HFIR register

The USB core embeds a dynamic trimming capability of SOF framing period in host mode allowing to synchronize an external device with the SOF frames.

When the OTG_HFIR register is changed within a current SOF frame, the SOF period correction is applied in the next frame as described in *Figure 535*.

For a dynamic update, it is required to set RLDCTRL=1.

Figure 535. Updating OTG_HFIR dynamically (RLDCTRL = 1)

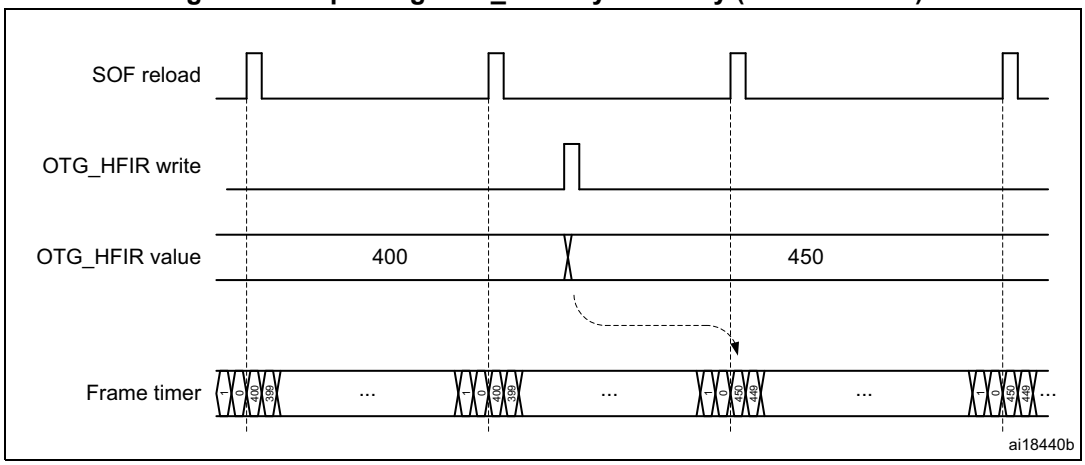

47.11 OTG_FS data FIFOs

The USB system features 1.25 Kbytes of dedicated RAM with a sophisticated FIFO control mechanism. The packet FIFO controller module in the OTG_FS core organizes RAM space into Tx FIFOs into which the application pushes the data to be temporarily stored before the USB transmission, and into a single Rx FIFO where the data received from the USB are temporarily stored before retrieval (popped) by the application. The number of instructed FIFOs and how these are organized inside the RAM depends on the device's role. In peripheral mode an additional Tx FIFO is instructed for each active IN endpoint. Any FIFO size is software configured to better meet the application requirements.

47.11.1 Peripheral FIFO architecture

Figure 536. Device-mode FIFO address mapping and AHB FIFO access mapping

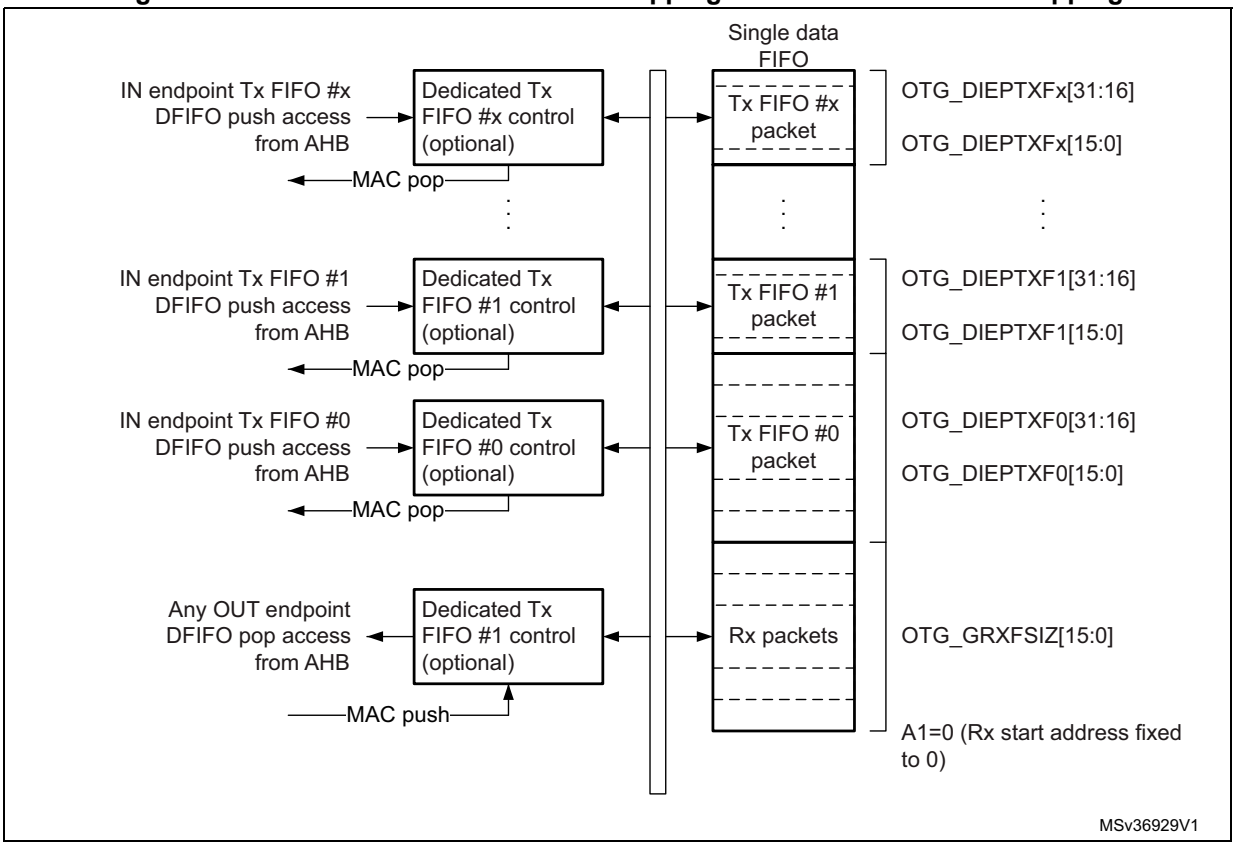

Peripheral Rx FIFO

The OTG peripheral uses a single receive FIFO that receives the data directed to all OUT endpoints. Received packets are stacked back-to-back until free space is available in the Rx FIFO. The status of the received packet (which contains the OUT endpoint destination number, the byte count, the data PID and the validity of the received data) is also stored by the core on top of the data payload. When no more space is available, host transactions are NACKed and an interrupt is received on the addressed endpoint. The size of the receive FIFO is configured in the receive FIFO size register (OTG_GRXFSIZ).

The single receive FIFO architecture makes it more efficient for the USB peripheral to fill in the receive RAM buffer:

- All OUT endpoints share the same RAM buffer (shared FIFO)
- The OTG_FS core can fill in the receive FIFO up to the limit for any host sequence of OUT tokens

The application keeps receiving the Rx FIFO non-empty interrupt (RXFLVL bit in OTG_GINTSTS) as long as there is at least one packet available for download. It reads the packet information from the receive status read and pop register (OTG_GRXSTSP) and finally pops data off the receive FIFO by reading from the endpoint-related pop address.

Peripheral Tx FIFOs

The core has a dedicated FIFO for each IN endpoint. The application configures FIFO sizes by writing the endpoint 0 transmit FIFO size register (OTG_DIEPTXF0) for IN endpoint0 and the device IN endpoint transmit FIFOx registers (OTG_DIEPTXFx) for IN endpoint-x.

47.11.2 Host FIFO architecture

Figure 537. Host-mode FIFO address mapping and AHB FIFO access mapping

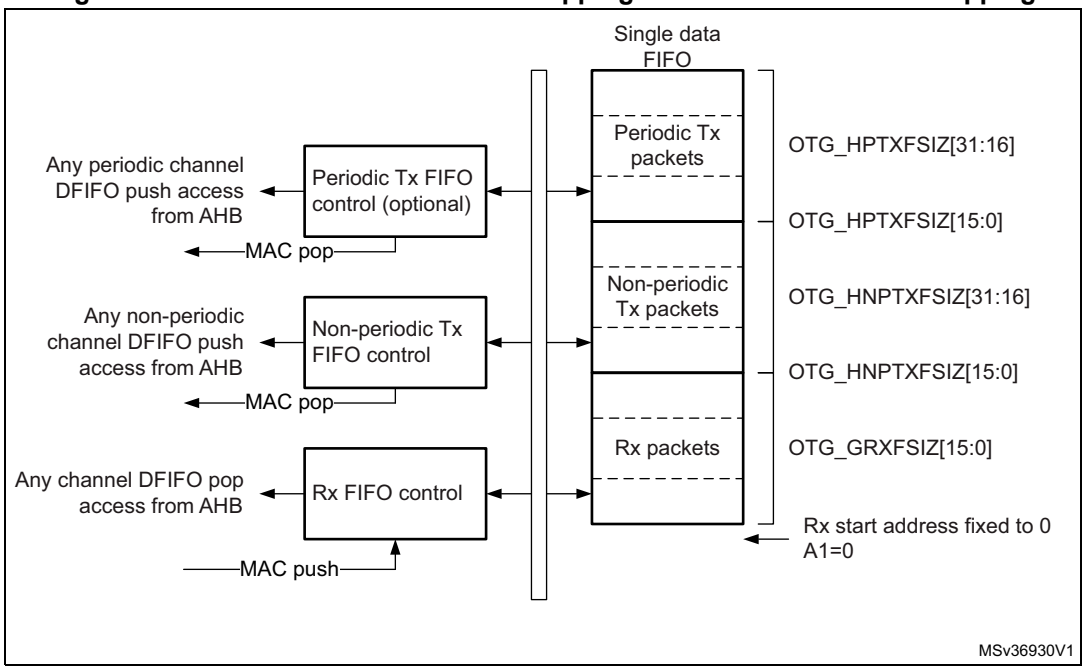

Host Rx FIFO

The host uses one receiver FIFO for all periodic and nonperiodic transactions. The FIFO is used as a receive buffer to hold the received data (payload of the received packet) from the USB until it is transferred to the system memory. Packets received from any remote IN endpoint are stacked back-to-back until free space is available. The status of each received packet with the host channel destination, byte count, data PID and validity of the received data are also stored into the FIFO. The size of the receive FIFO is configured in the receive FIFO size register (OTG_GRXFSIZ).

The single receive FIFO architecture makes it highly efficient for the USB host to fill in the receive data buffer:

- All IN configured host channels share the same RAM buffer (shared FIFO)
- The OTG_FS core can fill in the receive FIFO up to the limit for any sequence of IN tokens driven by the host software

The application receives the Rx FIFO not-empty interrupt as long as there is at least one packet available for download. It reads the packet information from the receive status read and pop register and finally pops the data off the receive FIFO.

Host Tx FIFOs

The host uses one transmit FIFO for all non-periodic (control and bulk) OUT transactions and one transmit FIFO for all periodic (isochronous and interrupt) OUT transactions. FIFOs are used as transmit buffers to hold the data (payload of the transmit packet) to be transmitted over the USB. The size of the periodic (nonperiodic) Tx FIFO is configured in the host periodic (nonperiodic) transmit FIFO size OTG_HPTXFSIZ / OTG_HNPTXFSIZ) register.

The two Tx FIFO implementation derives from the higher priority granted to the periodic type of traffic over the USB frame. At the beginning of each frame, the built-in host scheduler processes the periodic request queue first, followed by the nonperiodic request queue.

The two transmit FIFO architecture provides the USB host with separate optimization for periodic and nonperiodic transmit data buffer management:

- All host channels configured to support periodic (nonperiodic) transactions in the OUT direction share the same RAM buffer (shared FIFOs)
- The OTG_FS core can fill in the periodic (nonperiodic) transmit FIFO up to the limit for any sequence of OUT tokens driven by the host software

The OTG_FS core issues the periodic Tx FIFO empty interrupt (PTXFE bit in OTG_GINTSTS) as long as the periodic Tx FIFO is half or completely empty, depending on the value of the periodic Tx FIFO empty level bit in the AHB configuration register (PTXFELVL bit in OTG_GAHBCFG). The application can push the transmission data in advance as long as free space is available in both the periodic Tx FIFO and the periodic request queue. The host periodic transmit FIFO and queue status register (OTG_HPTXSTS) can be read to know how much space is available in both.

OTG_FS core issues the non periodic Tx FIFO empty interrupt (NPTXFE bit in OTG_GINTSTS) as long as the nonperiodic Tx FIFO is half or completely empty depending on the non periodic Tx FIFO empty level bit in the AHB configuration register (TXFELVL bit in OTG_GAHBCFG). The application can push the transmission data as long as free space is available in both the nonperiodic Tx FIFO and nonperiodic request queue. The host nonperiodic transmit FIFO and queue status register (OTG_HNPTXSTS) can be read to know how much space is available in both.

47.11.3 FIFO RAM allocation

Device mode

Receive FIFO RAM allocation: the application should allocate RAM for SETUP packets:

- 10 locations must be reserved in the receive FIFO to receive SETUP packets on control endpoint. The core does not use these locations, which are reserved for SETUP packets, to write any other data.
- One location is to be allocated for Global OUT NAK.
- Status information is written to the FIFO along with each received packet. Therefore, a minimum space of (largest packet size / 4) + 1 must be allocated to receive packets. If multiple isochronous endpoints are enabled, then at least two (largest packet size / 4) + 1 spaces must be allocated to receive back-to-back packets. Typically, two (largest packet size / 4) + 1 spaces are recommended so that when the previous packet is being transferred to the CPU, the USB can receive the subsequent packet.
- Along with the last packet for each endpoint, transfer complete status information is also pushed to the FIFO. One location for each OUT endpoint is recommended.

Device RxFIFO =

(5 * number of control endpoints + 8) + ((largest USB packet used / 4) + 1 for status information) + (2 * number of OUT endpoints) + 1 for Global NAK

Example: The MPS is 1,024 bytes for a periodic USB packet and 512 bytes for a non-periodic USB packet. There are three OUT endpoints, three IN endpoints, one control endpoint, and three host channels.

Device RxFIFO = (5 * 1 + 8) + ((1,024 / 4) +1) + (2 * 4) + 1 = 279

Transmit FIFO RAM allocation: the minimum RAM space required for each IN endpoint Transmit FIFO is the maximum packet size for that particular IN endpoint.

Note: More space allocated in the transmit IN endpoint FIFO results in better performance on the USB.

Host mode

Receive FIFO RAM allocation:

Status information is written to the FIFO along with each received packet. Therefore, a minimum space of (largest packet size / 4) + 1 must be allocated to receive packets. If multiple isochronous channels are enabled, then at least two (largest packet size / 4) + 1 spaces must be allocated to receive back-to-back packets. Typically, two (largest packet size / 4) + 1 spaces are recommended so that when the previous packet is being transferred to the CPU, the USB can receive the subsequent packet.

Along with the last packet in the host channel, transfer complete status information is also pushed to the FIFO. So one location must be allocated for this.

Host RxFIFO = (largest USB packet used / 4) + 1 for status information + 1 transfer complete

Example: Host RxFIFO = ((1,024 / 4) + 1) + 1 = 258

Transmit FIFO RAM allocation:

The minimum amount of RAM required for the host Non-periodic Transmit FIFO is the largest maximum packet size among all supported non-periodic OUT channels.

Typically, two largest packet sizes worth of space is recommended, so that when the current packet is under transfer to the USB, the CPU can get the next packet.

Non-Periodic TxFIFO = largest non-periodic USB packet used / 4

Example: Non-Periodic TxFIFO = (512 / 4) = 128

The minimum amount of RAM required for host periodic Transmit FIFO is the largest maximum packet size out of all the supported periodic OUT channels. If there is at least one isochronous OUT endpoint, then the space must be at least two times the maximum packet size of that channel.

Host Periodic TxFIFO = largest periodic USB packet used / 4

Example: Host Periodic TxFIFO = (1,024 / 4) = 256

Note: More space allocated in the Transmit Non-periodic FIFO results in better performance on the USB.

47.12 OTG_FS system performance

Best USB and system performance is achieved owing to the large RAM buffers, the highly configurable FIFO sizes, the quick 32-bit FIFO access through AHB push/pop registers and, especially, the advanced FIFO control mechanism. Indeed, this mechanism allows the OTG_FS to fill in the available RAM space at best regardless of the current USB sequence. With these features:

- The application gains good margins to calibrate its intervention in order to optimize the CPU bandwidth usage:
  - It can accumulate large amounts of transmission data in advance compared to when they are effectively sent over the USB
  - It benefits of a large time margin to download data from the single receive FIFO
- The USB core is able to maintain its full operating rate, that is to provide maximum full-speed bandwidth with a great margin of autonomy versus application intervention:
  - It has a large reserve of transmission data at its disposal to autonomously manage the sending of data over the USB
  - It has a lot of empty space available in the receive buffer to autonomously fill it in with the data coming from the USB

As the OTG_FS core is able to fill in the 1.25-Kbyte RAM buffer very efficiently, and as 1.25-Kbyte of transmit/receive data is more than enough to cover a full speed frame, the USB system is able to withstand the maximum full-speed data rate for up to one USB frame (1 ms) without any CPU intervention.

47.13 OTG_FS interrupts

When the OTG_FS controller is operating in one mode, either device or host, the application must not access registers from the other mode. If an illegal access occurs, a mode mismatch interrupt is generated and reflected in the core interrupt register (MMIS bit in the OTG_GINTSTS register). When the core switches from one mode to the other, the registers in the new mode of operation must be reprogrammed as they would be after a power-on reset.

Figure 538 shows the interrupt hierarchy.

Figure 538. Interrupt hierarchy

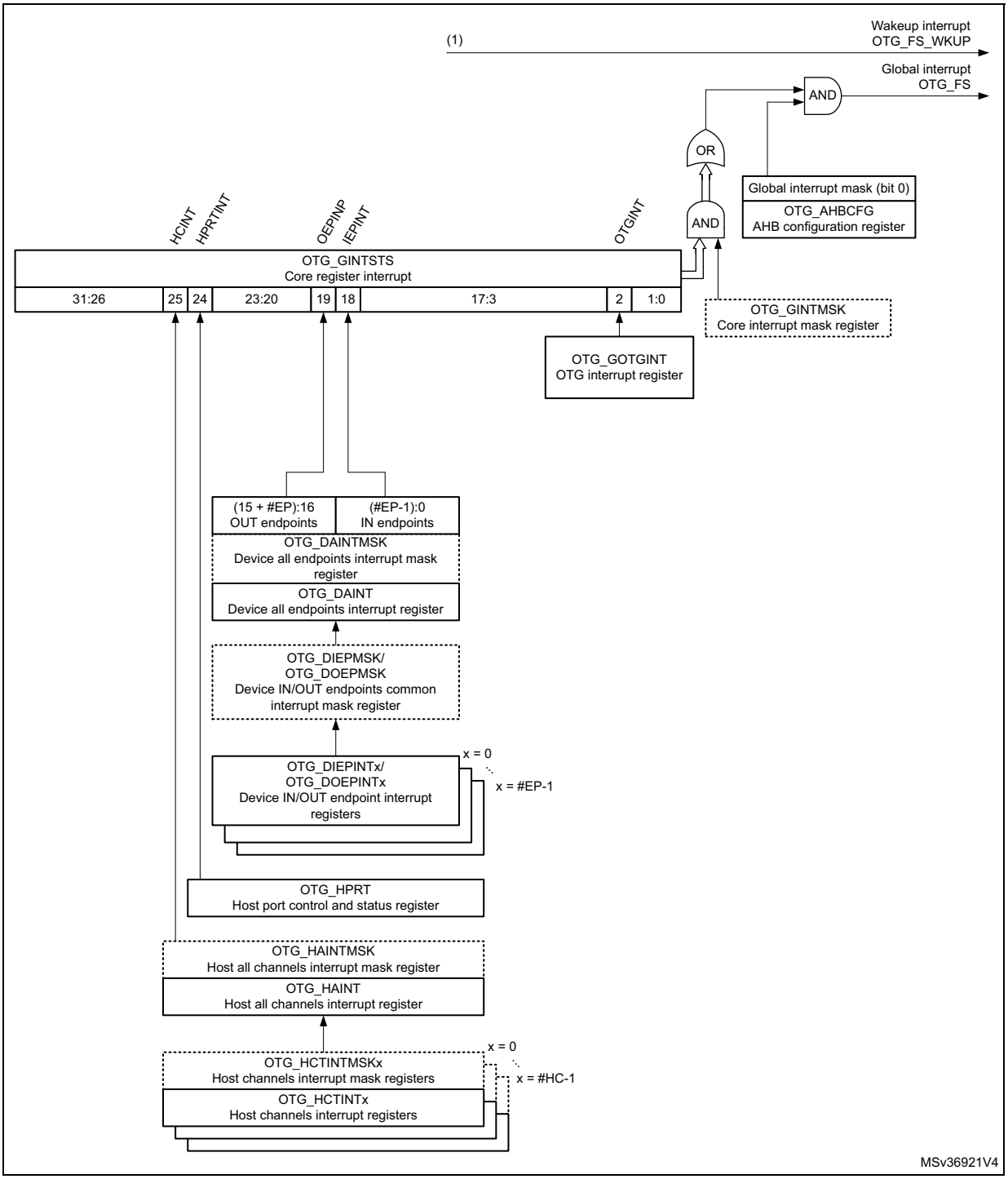

1. OTG_FS_WKUP becomes active (high state) when resume condition occurs during L1 SLEEP or L2 SUSPEND states.

47.14 OTG_FS control and status registers

By reading from and writing to the control and status registers (CSRs) through the AHB slave interface, the application controls the OTG_FS controller. These registers are 32 bits wide, and the addresses are 32-bit block aligned. The OTG_FS registers must be accessed by words (32 bits).

CSRs are classified as follows:

- Core global registers
- Host-mode registers
- Host global registers
- Host port CSRs
- Host channel-specific registers
- Device-mode registers
- Device global registers
- Device endpoint-specific registers
- Power and clock-gating registers
- Data FIFO (DFIFO) access registers

Only the core global, power and clock-gating, data FIFO access, and host port control and status registers can be accessed in both host and device modes. When the OTG_FS controller is operating in one mode, either device or host, the application must not access registers from the other mode. If an illegal access occurs, a mode mismatch interrupt is generated and reflected in the core interrupt register (MMIS bit in the OTG_GINTSTS register). When the core switches from one mode to the other, the registers in the new mode of operation must be reprogrammed as they would be after a power-on reset.

47.14.1 CSR memory map

The host and device mode registers occupy different addresses. All registers are implemented in the AHB clock domain.

Global CSR map

These registers are available in both host and device modes.

Table 321. Core global control and status registers (CSRs)

Acronym	Address offset	Register name
OTG_GOTGCTL	0x000	*Section 47.15.1: OTG control and status register (OTG_GOTGCTL)*
OTG_GOTGINT	0x004	*Section 47.15.2: OTG interrupt register (OTG_GOTGINT)*
OTG_GAHBCFG	0x008	*Section 47.15.3: OTG AHB configuration register (OTG_GAHBCFG)*
OTG_GUSBCFG	0x00C	*Section 47.15.4: OTG USB configuration register (OTG_GUSBCFG)*
OTG_GRSTCTL	0x010	*Section 47.15.5: OTG reset register (OTG_GRSTCTL)*
OTG_GINTSTS	0x014	*Section 47.15.6: OTG core interrupt register (OTG_GINTSTS)*
OTG_GINTMSK	0x018	*Section 47.15.7: OTG interrupt mask register (OTG_GINTMSK)*

Table 321. Core global control and status registers (CSRs) (continued)

Acronym	Address offset	Register name
OTG_GRXSTSR	0x01C	*Section 47.15.8: OTG receive status debug read register (OTG_GRXSTSR)*
		Section 47.15.9: OTG receive status debug read [alternate] (OTG_GRXSTSR)
OTG_GRXSTSP	0x020	*Section 47.15.10: OTG status read and pop registers (OTG_GRXSTSP)*
		Section 47.15.11: OTG status read and pop registers [alternate] (OTG_GRXSTSP)
OTG_GRXFSIZ	0x024	*Section 47.15.12: OTG receive FIFO size register (OTG_GRXFSIZ)*
OTG_HNPTXFSIZ/ OTG_DIEPTXF0(1)	0x028	*Section 47.15.13: OTG host non-periodic transmit FIFO size register (OTG_HNPTXFSIZ)/Endpoint 0 Transmit FIFO size (OTG_DIEPTXF0)*
OTG_HNPTXSTS	0x02C	*Section 47.15.14: OTG non-periodic transmit FIFO/queue status register (OTG_HNPTXSTS)*
OTG_GCCFG	0x038	*Section 47.15.15: OTG general core configuration register (OTG_GCCFG)*
OTG_CID	0x03C	*Section 47.15.16: OTG core ID register (OTG_CID)*
OTG_GLPMCFG	0x54	*Section 47.15.17: OTG core LPM configuration register (OTG_GLPMCFG)*
OTG_GPWRDN	0x058	*Section 47.15.18: OTG power down register (OTG_GPWRDN)*
OTG_GADPCTL	0x060	*Section 47.15.19: OTG ADP timer, control and status register (OTG_GADPCTL)*
OTG_HPTXFSIZ	0x100	*Section 47.15.20: OTG host periodic transmit FIFO size register (OTG_HPTXFSIZ)*
OTG_DIEPTXFx	0x104 0x108 ... 0x114	*Section 47.15.21: OTG device IN endpoint transmit FIFO x size register (OTG_DIEPTXFx)*

1. The general rule is to use OTG_HNPTXFSIZ for host mode and OTG_DIEPTXF0 for device mode.

Host-mode CSR map

These registers must be programmed every time the core changes to host mode.

Table 322. Host-mode control and status registers (CSRs)

Acronym	Offset address	Register name
OTG_HCFG	0x400	*Section 47.15.23: OTG host configuration register (OTG_HCFG)*
OTG_HFIR	0x404	*Section 47.15.24: OTG host frame interval register (OTG_HFIR)*
OTG_HFNUM	0x408	*Section 47.15.25: OTG host frame number/frame time remaining register (OTG_HFNUM)*
OTG_HPTXSTS	0x410	*Section 47.15.26: OTG_Host periodic transmit FIFO/queue status register (OTG_HPTXSTS)*

Table 322. Host-mode control and status registers (CSRs) (continued)

Acronym	Offset address	Register name
OTG_HAINT	0x414	*Section 47.15.27: OTG host all channels interrupt register (OTG_HAINT)*
OTG_HAINTMSK	0x418	*Section 47.15.28: OTG host all channels interrupt mask register (OTG_HAINTMSK)*
OTG_HPRT	0x440	*Section 47.15.29: OTG host port control and status register (OTG_HPRT)*
OTG_HCCHARx	0x500 0x520 ... 0x660	*Section 47.15.30: OTG host channel x characteristics register (OTG_HCCHARx)*
OTG_HCINTx	0x508 0x528 .... 0x668	*Section 47.15.31: OTG host channel x interrupt register (OTG_HCINTx)*
OTG_HCINTMSKx	0x50C 0x52C 0x66C	*Section 47.15.32: OTG host channel x interrupt mask register (OTG_HCINTMSKx)*
OTG_HCTSIZx	0x510 0x530 .... 0x670	*Section 47.15.33: OTG host channel x transfer size register (OTG_HCTSIZx)*

Device-mode CSR map

These registers must be programmed every time the core changes to device mode.

Table 323. Device-mode control and status registers

Acronym	Offset address	Register name
OTG_DCFG	0x800	*Section 47.15.35: OTG device configuration register (OTG_DCFG)*
OTG_DCTL	0x804	*Section 47.15.36: OTG device control register (OTG_DCTL)*
OTG_DSTS	0x808	*Section 47.15.37: OTG device status register (OTG_DSTS)*
OTG_DIEPMSK	0x810	*Section 47.15.38: OTG device IN endpoint common interrupt mask register (OTG_DIEPMSK)*
OTG_DOEPMSK	0x814	*Section 47.15.39: OTG device OUT endpoint common interrupt mask register (OTG_DOEPMSK)*
OTG_DAINT	0x818	*Section 47.15.40: OTG device all endpoints interrupt register (OTG_DAINT)*
OTG_DAINTMSK	0x81C	*Section 47.15.41: OTG all endpoints interrupt mask register (OTG_DAINTMSK)*

Table 323. Device-mode control and status registers (continued)

Acronym	Offset address	Register name
OTG_DVBUSDIS	0x828	*Section 47.15.42: OTG device V_{BUS} discharge time register (OTG_DVBUSDIS)*
OTG_DVBUSPULSE	0x82C	*Section 47.15.43: OTG device V_{BUS} pulsing time register (OTG_DVBUSPULSE)*
OTG_DIEPEMPMSK	0x834	*Section 47.15.44: OTG device IN endpoint FIFO empty interrupt mask register (OTG_DIEPEMPMSK)*
OTG_DIEPCTL0	0x900	*Section 47.15.45: OTG device control IN endpoint 0 control register (OTG_DIEPCTL0)*
OTG_DIEPCTLx	0x920 0x940 ... 0x9A0	*Section 47.15.46: OTG device IN endpoint x control register (OTG_DIEPCTLx)*
OTG_DIEPINTx	0x908 0x928 .... 0x988	*Section 47.15.47: OTG device IN endpoint x interrupt register (OTG_DIEPINTx)*
OTG_DIEPTSIZ0	0x910	*Section 47.15.48: OTG device IN endpoint 0 transfer size register (OTG_DIEPTSIZ0)*
OTG_DTXFSTSx	0x918 0x938 .... 0x998	*Section 47.15.49: OTG device IN endpoint transmit FIFO status register (OTG_DTXFSTSx)*
OTG_DIEPTSIZx	0x930 0x950 ... 0x9B0	*Section 47.15.50: OTG device IN endpoint x transfer size register (OTG_DIEPTSIZx)*
OTG_DOEPCTL0	0xB00	*Section 47.15.51: OTG device control OUT endpoint 0 control register (OTG_DOEPCTL0)*
OTG_DOEPINTx	0xB08 0xB28 ... 0xBA8	*Section 47.15.52: OTG device OUT endpoint x interrupt register (OTG_DOEPINTx)*
OTG_DOEPTSIZ0	0xB10	*Section 47.15.53: OTG device OUT endpoint 0 transfer size register (OTG_DOEPTSIZ0)*

Table 323. Device-mode control and status registers (continued)

Acronym	Offset address	Register name
OTG_DOEPCTLx	0xB20 0xB40 ... 0xBA0	*Section 47.15.54: OTG device OUT endpoint x control register (OTG_DOEPCTLx)*
OTG_DOEPTSIZx	0xB30 0xB50 ... 0xBB0	*Section 47.15.55: OTG device OUT endpoint x transfer size register (OTG_DOEPTSIZx)*

Data FIFO (DFIFO) access register map

These registers, available in both host and device modes, are used to read or write the FIFO space for a specific endpoint or a channel, in a given direction. If a host channel is of type IN, the FIFO can only be read on the channel. Similarly, if a host channel is of type OUT, the FIFO can only be written on the channel.

Table 324. Data FIFO (DFIFO) access register map

FIFO access register section	Offset address	Access
Device IN endpoint 0/Host OUT Channel 0: DFIFO write access Device OUT endpoint 0/Host IN Channel 0: DFIFO read access	0x1000–0x1FFC	w r
Device IN endpoint 1/Host OUT Channel 1: DFIFO write access Device OUT endpoint 1/Host IN Channel 1: DFIFO read access	0x2000–0x2FFC	w r
...	...	...
Device IN endpoint x(1)/Host OUT Channel x(1): DFIFO write access Device OUT endpoint x(1)/Host IN Channel x(1): DFIFO read access	0xX000–0xXFFC	w r

1. Where x is 5 in device mode and 11 in host mode.

Power and clock gating CSR map

There is a single register for power and clock gating. It is available in both host and device modes.

Table 325. Power and clock gating control and status registers

Acronym	Offset address	Register name
OTG_PCGCCTL	0xE00–0xE04	*Section 47.15.56: OTG power and clock gating control register (OTG_PCGCCTL)*

47.15 OTG_FS registers

These registers are available in both host and device modes, and do not need to be reprogrammed when switching between these modes.

Bit values in the register descriptions are expressed in binary unless otherwise specified.

47.15.1 OTG control and status register (OTG_GOTGCTL)

Address offset: 0x000

Reset value: 0x0001 0000

The OTG_GOTGCTL register controls the behavior and reflects the status of the OTG function of the core.

31	30	29	28	27	26	25	24	23	22	21	20	19	18	17	16
Res.	Res.	Res.	Res.	Res.	Res.	Res.	Res.	Res.	Res.	CUR MOD	OTG VER	BSVLD	ASVLD	DBCT	CID STS
										r	rw	r	r	r	r
15	14	13	12	11	10	9	8	7	6	5	4	3	2	1	0
Res.	Res.	Res.	EHEN	DHNP EN	HSHNP EN	HNP RQ	HNG SCS	BVALO VAL	BVALO EN	AVALO VAL	AVALO EN	VBVAL OVAL	VBVAL OEN	SRQ	SRQ SCS
			rw	rw	rw	rw	r	rw	rw	rw	rw	rw	rw	rw	r

Bits 31:22 Reserved, must be kept at reset value.

Bit 21 **CURMOD:** Current mode of operation
Indicates the current mode (host or device).
0: Device mode
1: Host mode

Bit 20 **OTGVER:** OTG version
Selects the OTG revision.
0:OTG Version 1.3. OTG1.3 is obsolete for new product development.
1:OTG Version 2.0. In this version the core supports only data line pulsing for SRP.

Bit 19 **BSVLD:** B-session valid
Indicates the device mode transceiver status.
0: B-session is not valid.
1: B-session is valid.
In OTG mode, the user can use this bit to determine if the device is connected or disconnected.
Note: Only accessible in device mode.

Bit 18 **ASVLD:** A-session valid
Indicates the host mode transceiver status.
0: A-session is not valid
1: A-session is valid
Note: Only accessible in host mode.

Bit 17 **DBCT:** Long/short debounce time
Indicates the debounce time of a detected connection.
0: Long debounce time, used for physical connections (100 ms + 2.5 µs)
1: Short debounce time, used for soft connections (2.5 µs)
Note: Only accessible in host mode.

Bit 16 **CIDSTS:** Connector ID status

Indicates the connector ID status on a connect event.

0: The OTG_FS controller is in A-device mode

1: The OTG_FS controller is in B-device mode

Note: Accessible in both device and host modes.

Bits 15:13 Reserved, must be kept at reset value.

Bit 12 **EHEN:** Embedded host enable

It is used to select between OTG A device state machine and embedded host state machine.

0: OTG A device state machine is selected

1: Embedded host state machine is selected

Bit 11 **DHNPEN:** Device HNP enabled

The application sets this bit when it successfully receives a SetFeature.SetHNPEnable command from the connected USB host.

0: HNP is not enabled in the application

1: HNP is enabled in the application

Note: Only accessible in device mode.

Bit 10 **HSHNPEN:** host set HNP enable

The application sets this bit when it has successfully enabled HNP (using the SetFeature.SetHNPEnable command) on the connected device.

0: Host Set HNP is not enabled

1: Host Set HNP is enabled

Note: Only accessible in host mode.

Bit 9 **HNPRQ:** HNP request

The application sets this bit to initiate an HNP request to the connected USB host. The application can clear this bit by writing a 0 when the host negotiation success status change bit in the OTG_GOTGINT register (HNSSCHG bit in OTG_GOTGINT) is set. The core clears this bit when the HNSSCHG bit is cleared.

0: No HNP request

1: HNP request

Note: Only accessible in device mode.

Bit 8 **HNGSCS:** Host negotiation success

The core sets this bit when host negotiation is successful. The core clears this bit when the HNP request (HNPRQ) bit in this register is set.

0: Host negotiation failure

1: Host negotiation success

Note: Only accessible in device mode.

Bit 7 **BVALOVAL:** B-peripheral session valid override value.

This bit is used to set override value for Bvalid signal when BVALOEN bit is set.

0: Bvalid value is '0' when BVALOEN = 1

1: Bvalid value is '1' when BVALOEN = 1

Note: Only accessible in device mode.

Bit 6 **BVALOEN:** B-peripheral session valid override enable.

This bit is used to enable/disable the software to override the Bvalid signal using the BVALOVAL bit.

0:Override is disabled and Bvalid signal from the respective PHY selected is used internally by the core

1:Internally Bvalid received from the PHY is overridden with BVALOVAL bit value

Note: Only accessible in device mode.

Bit 5 **AVALOVAL:** A-peripheral session valid override value.

This bit is used to set override value for Avalid signal when AVALOEN bit is set.

0: Avalid value is '0' when AVALOEN = 1

1: Avalid value is '1' when AVALOEN = 1

Note: Only accessible in host mode.

Bit 4 **AVALOEN:** A-peripheral session valid override enable.

This bit is used to enable/disable the software to override the Avalid signal using the AVALOVAL bit.

0:Override is disabled and Avalid signal from the respective PHY selected is used internally by the core

1:Internally Avalid received from the PHY is overridden with AVALOVAL bit value

Note: Only accessible in host mode.

Bit 3 **VBVALOVAL:** V_{BUS} valid override value.

This bit is used to set override value for vbusvalid signal when VBVALOEN bit is set.

0: vbusvalid value is '0' when VBVALOEN = 1

1: vbusvalid value is '1' when VBVALOEN = 1

Note: Only accessible in host mode.

Bit 2 **VBVALOEN:** V_{BUS} valid override enable.

This bit is used to enable/disable the software to override the vbusvalid signal using the VBVALOVAL bit.

0: Override is disabled and vbusvalid signal from the respective PHY selected is used internally by the core

1: Internally vbusvalid received from the PHY is overridden with VBVALOVAL bit value

Note: Only accessible in host mode.

Bit 1 **SRQ:** Session request

The application sets this bit to initiate a session request on the USB. The application can clear this bit by writing a 0 when the host negotiation success status change bit in the OTG_GOTGINT register (HNSSCHG bit in OTG_GOTGINT) is set. The core clears this bit when the HNSSCHG bit is cleared.

If the user uses the USB 1.1 full-speed serial transceiver interface to initiate the session request, the application must wait until V_{BUS} discharges to 0.2 V, after the B-session valid bit in this register (BSVLD bit in OTG_GOTGCTL) is cleared.

0: No session request

1: Session request

Note: Only accessible in device mode.

Bit 0 **SRQSCS:** Session request success

The core sets this bit when a session request initiation is successful.

0: Session request failure

1: Session request success

Note: Only accessible in device mode.

47.15.2 OTG interrupt register (OTG_GOTGINT)

Address offset: 0x04

Reset value: 0x0000 0000

The application reads this register whenever there is an OTG interrupt and clears the bits in this register to clear the OTG interrupt.

31	30	29	28	27	26	25	24	23	22	21	20	19	18	17	16
Res.	Res.	Res.	Res.	Res.	Res.	Res.	Res.	Res.	Res.	Res.	Res.	DBC DNE	ADTO CHG	HNG DET	Res.
												rc_w1	rc_w1	rc_w1	

15	14	13	12	11	10	9	8	7	6	5	4	3	2	1	0
Res.	Res.	Res.	Res.	Res.	Res.	HNSS CHG	SRSS CHG	Res.	Res.	Res.	Res.	Res.	SEDET	Res.	Res.
						rc_w1	rc_w1						rc_w1		

Bits 31:20 Reserved, must be kept at reset value.

Bit 19 **DBCDNE:** Debounce done

The core sets this bit when the debounce is completed after the device connect. The application can start driving USB reset after seeing this interrupt. This bit is only valid when the HNP Capable or SRP Capable bit is set in the OTG_GUSBCFG register (HNPCAP bit or SRPCAP bit in OTG_GUSBCFG, respectively).

Note: Only accessible in host mode.

Bit 18 **ADTOCHG:** A-device timeout change

The core sets this bit to indicate that the A-device has timed out while waiting for the B-device to connect.

Note: Accessible in both device and host modes.

Bit 17 **HNGDET:** Host negotiation detected

The core sets this bit when it detects a host negotiation request on the USB.

Note: Accessible in both device and host modes.

Bits 16:10 Reserved, must be kept at reset value.

Bit 9 **HNSSCHG:** Host negotiation success status change

The core sets this bit on the success or failure of a USB host negotiation request. The application must read the host negotiation success bit of the OTG_GOTGCTL register (HNGSCS bit in OTG_GOTGCTL) to check for success or failure.

Note: Accessible in both device and host modes.

Bits 7:3 Reserved, must be kept at reset value.

Bit 8 **SRSSCHG:** Session request success status change

The core sets this bit on the success or failure of a session request. The application must read the session request success bit in the OTG_GOTGCTL register (SRQSCS bit in OTG_GOTGCTL) to check for success or failure.

Note: Accessible in both device and host modes.

Bit 2 **SEDET:** Session end detected

The core sets this bit to indicate that the level of the voltage on V_{BUS} is no longer valid for a B-Peripheral session when $V_{BUS} < 0.8$ V.

Note: Accessible in both device and host modes.

Bits 1:0 Reserved, must be kept at reset value.

47.15.3 OTG AHB configuration register (OTG_GAHBCFG)

Address offset: 0x008

Reset value: 0x0000 0000

This register can be used to configure the core after power-on or a change in mode. This register mainly contains AHB system-related configuration parameters. Do not change this register after the initial programming. The application must program this register before starting any transactions on either the AHB or the USB.

31	30	29	28	27	26	25	24	23	22	21	20	19	18	17	16
Res.	Res.	Res.	Res.	Res.	Res.	Res.	Res.	Res.	Res.	Res.	Res.	Res.	Res.	Res.	Res.

15	14	13	12	11	10	9	8	7	6	5	4	3	2	1	0
Res.	Res.	Res.	Res.	Res.	Res.	Res.	PTXFE LVL	TXFE LVL	Res.	Res.	Res.	Res.	Res.	Res.	GINT MSK
							rw	rw							rw

Bits 31:9 Reserved, must be kept at reset value.

Bit 8 **PTXFELVL:** Periodic Tx FIFO empty level

Indicates when the periodic Tx FIFO empty interrupt bit in the OTG_GINTSTS register (PTXFE bit in OTG_GINTSTS) is triggered.

0: PTXFE (in OTG_GINTSTS) interrupt indicates that the Periodic Tx FIFO is half empty

1: PTXFE (in OTG_GINTSTS) interrupt indicates that the Periodic Tx FIFO is completely empty

Note: Only accessible in host mode.

Bit 7 **TXFELVL:** Tx FIFO empty level

In device mode, this bit indicates when IN endpoint Transmit FIFO empty interrupt (TXFE in OTG_DIEPINTx) is triggered:

0:The TXFE (in OTG_DIEPINTx) interrupt indicates that the IN endpoint Tx FIFO is half empty

1:The TXFE (in OTG_DIEPINTx) interrupt indicates that the IN endpoint Tx FIFO is completely empty

In host mode, this bit indicates when the nonperiodic Tx FIFO empty interrupt (NPTXFE bit in OTG_GINTSTS) is triggered:

0:The NPTXFE (in OTG_GINTSTS) interrupt indicates that the nonperiodic Tx FIFO is half empty

1:The NPTXFE (in OTG_GINTSTS) interrupt indicates that the nonperiodic Tx FIFO is completely empty

Bits 6:1 Reserved, must be kept at reset value.

Bit 0 **GINTMSK:** Global interrupt mask

The application uses this bit to mask or unmask the interrupt line assertion to itself. Irrespective of this bit's setting, the interrupt status registers are updated by the core.

0: Mask the interrupt assertion to the application.

1: Unmask the interrupt assertion to the application.

Note: Accessible in both device and host modes.

47.15.4 OTG USB configuration register (OTG_GUSBCFG)

Address offset: 0x00C

Reset value: 0x0000 1440

This register can be used to configure the core after power-on or a changing to host mode or device mode. It contains USB and USB-PHY related configuration parameters. The application must program this register before starting any transactions on either the AHB or the USB. Do not make changes to this register after the initial programming.

31	30	29	28	27	26	25	24	23	22	21	20	19	18	17	16
Res.	FD MOD	FH MOD	Res.	Res.	Res.	Res.	Res.	Res.	Res.	Res.	Res.	Res.	Res.	Res.	Res.
	rw	rw													

15	14	13	12	11	10	9	8	7	6	5	4	3	2	1	0
Res.	Res.	TRDT				HNP CAP	SRP CAP	Res.	PHY SEL	Res.	Res.	Res.	TOCAL		
		rw				rw	rw		r				rw		

Bit 31 Reserved, must be kept at reset value.

Bit 30 **FDMOD:** Force device mode

Writing a 1 to this bit, forces the core to device mode irrespective of the OTG_ID input pin.
0: Normal mode
1: Force device mode
After setting the force bit, the application must wait at least 25 ms before the change takes effect.

Note: Accessible in both device and host modes.

Bit 29 **FHMOD:** Force host mode

Writing a 1 to this bit, forces the core to host mode irrespective of the OTG_ID input pin.
0: Normal mode
1: Force host mode
After setting the force bit, the application must wait at least 25 ms before the change takes effect.

Note: Accessible in both device and host modes.

Bits 28:26 Reserved, must be kept at reset value.

Bits 25:23 Reserved, must be kept at reset value.

Bit 22 Reserved, must be kept at reset value.

Bits 21:16 Reserved, must be kept at reset value.

Bit 15 Reserved, must be kept at reset value.

Bit 14 Reserved, must be kept at reset value.

Bits 13:10 **TRDT[3:0]:** USB turnaround time

These bits allows to set the turnaround time in PHY clocks. They must be configured according to *Table 326: TRDT values (FS)*, depending on the application AHB frequency. Higher TRDT values allow stretching the USB response time to IN tokens in order to compensate for longer AHB read access latency to the data FIFO.

Note: Only accessible in device mode.

Bit 9 **HNPCAP:** HNP-capable

The application uses this bit to control the OTG_FS controller's HNP capabilities.

0: HNP capability is not enabled.

1: HNP capability is enabled.

Note: Accessible in both device and host modes.

Bit 8 **SRPCAP:** SRP-capable

The application uses this bit to control the OTG_FS controller's SRP capabilities. If the core operates as a non-SRP-capable

B-device, it cannot request the connected A-device (host) to activate V_{BUS} and start a session.

0: SRP capability is not enabled.

1: SRP capability is enabled.

Note: Accessible in both device and host modes.

Bit 7 Reserved, must be kept at reset value.

Bit 6 **PHYSEL:** Full Speed serial transceiver select

This bit is always 1 with read-only access.

Bit 5 Reserved, must be kept at reset value.

Bit 4 Reserved, must be kept at reset value.

Bit 3 Reserved, must be kept at reset value.

Bits 2:0 **TOCAL[2:0]:** FS timeout calibration

The number of PHY clocks that the application programs in this field is added to the full-speed interpacket timeout duration in the core to account for any additional delays introduced by the PHY. This can be required, because the delay introduced by the PHY in generating the line state condition can vary from one PHY to another.

The USB standard timeout value for full-speed operation is 16 to 18 (inclusive) bit times. The application must program this field based on the speed of enumeration. The number of bit times added per PHY clock is 0.25 bit times.

Table 326. TRDT values (FS)

AHB frequency range (MHz)		TRDT minimum value
Min	Max	
14.2	15	0xF
15	16	0xE
16	17.2	0xD
17.2	18.5	0xC
18.5	20	0xB
20	21.8	0xA
21.8	24	0x9
24	27.5	0x8
27.5	32	0x7
32	-	0x6

47.15.5 OTG reset register (OTG_GRSTCTL)

Address offset: 0x10

Reset value: 0x8000 0000

The application uses this register to reset various hardware features inside the core.

31	30	29	28	27	26	25	24	23	22	21	20	19	18	17	16
AHB IDL	Res.	Res.	Res.	Res.	Res.	Res.	Res.	Res.	Res.	Res.	Res.	Res.	Res.	Res.	Res.
r															r

15	14	13	12	11	10	9	8	7	6	5	4	3	2	1	0
Res.	Res.	Res.	Res.	Res.	TXFNUM					TXF FLSH	RXF FLSH	Res.	FCRST	PSRST	CSRST
					rw					rs	rs		rs	rs	r

Bit 31 **AHBIDL:** AHB master idle

Indicates that the AHB master state machine is in the Idle condition.

Note: Accessible in both device and host modes.

Bits 30:11 Reserved, must be kept at reset value.

Bits 10:6 **TXFNUM[4:0]:** Tx FIFO number

This is the FIFO number that must be flushed using the Tx FIFO Flush bit. This field must not be changed until the core clears the Tx FIFO Flush bit.

00000:

- Non-periodic Tx FIFO flush in host mode
- Tx FIFO 0 flush in device mode

00001:

- Periodic Tx FIFO flush in host mode
- Tx FIFO 1 flush in device mode

00010: Tx FIFO 2 flush in device mode

...

01111: Tx FIFO 15 flush in device mode

10000: Flush all the transmit FIFOs in device or host mode.

Note: Accessible in both device and host modes.

Bit 5 **TXFFLSH:** Tx FIFO flush

This bit selectively flushes a single or all transmit FIFOs, but cannot do so if the core is in the midst of a transaction.

The application must write this bit only after checking that the core is neither writing to the Tx FIFO nor reading from the Tx FIFO. Verify using these registers:

Read—NAK Effective interrupt ensures the core is not reading from the FIFO

Write—AHBIDL bit in OTG_GRSTCTL ensures the core is not writing anything to the FIFO.

Flushing is normally recommended when FIFOs are reconfigured. FIFO flushing is also recommended during device endpoint disable. The application must wait until the core clears this bit before performing any operations. This bit takes eight clocks to clear, using the slower clock of phy_clk or hclk.

Note: Accessible in both device and host modes.

Bit 4 **RXFFLSH:** Rx FIFO flush

The application can flush the entire Rx FIFO using this bit, but must first ensure that the core is not in the middle of a transaction.

The application must only write to this bit after checking that the core is neither reading from the Rx FIFO nor writing to the Rx FIFO.

The application must wait until the bit is cleared before performing any other operations. This bit requires 8 clocks (slowest of PHY or AHB clock) to clear.

Note: Accessible in both device and host modes.

Bit 3 Reserved, must be kept at reset value.

Bit 2 **FCRST:** Host frame counter reset

The application writes this bit to reset the frame number counter inside the core. When the frame counter is reset, the subsequent SOF sent out by the core has a frame number of 0.

When application writes '1' to the bit, it might not be able to read back the value as it will get cleared by the core in a few clock cycles.

Note: Only accessible in host mode.

Bit 1 **PSRST:** Partial soft reset

Resets the internal state machines but keeps the enumeration info. Could be used to recover some specific PHY errors.

Note: Accessible in both device and host modes.

Note: This bit is available in STM32L49x/L4Ax products, reserved otherwise.

Bit 0 **CSRST:** Core soft reset

Resets the HCLK and PHY clock domains as follows:

Clears the interrupts and all the CSR register bits except for the following bits:

- GATEHCLK bit in OTG_PCGCCTL
- STPPCLK bit in OTG_PCGCCTL
- FSLSPCS bits in OTG_HCFG
- DSPD bit in OTG_DCFG
- SDIS bit in OTG_DCTL
- OTG_GCCFG register
- OTG_GPWRDN register
- OTG_GADPCTL register

All module state machines (except for the AHB slave unit) are reset to the Idle state, and all the transmit FIFOs and the receive FIFO are flushed.

Any transactions on the AHB Master are terminated as soon as possible, after completing the last data phase of an AHB transfer. Any transactions on the USB are terminated immediately.

When ADP feature is enabled, the power management module is not reset by the core soft reset.

The application can write to this bit any time it wants to reset the core. This is a self-clearing bit and the core clears this bit after all the necessary logic is reset in the core, which can take several clocks, depending on the current state of the core. Once this bit has been cleared, the software must wait at least 3 PHY clocks before accessing the PHY domain (synchronization delay). The software must also check that bit 31 in this register is set to 1 (AHB Master is Idle) before starting any operation.

Typically, the software reset is used during software development and also when the user dynamically changes the PHY selection bits in the above listed USB configuration registers. When you change the PHY, the corresponding clock for the PHY is selected and used in the PHY domain. Once a new clock is selected, the PHY domain has to be reset for proper operation.

Note: Accessible in both device and host modes.

47.15.6 OTG core interrupt register (OTG_GINTSTS)

Address offset: 0x014

Reset value: 0x0400 0020

This register interrupts the application for system-level events in the current mode (device mode or host mode).

Some of the bits in this register are valid only in host mode, while others are valid in device mode only. This register also indicates the current mode. To clear the interrupt status bits of the rc_w1 type, the application must write 1 into the bit.

The FIFO status interrupts are read-only; once software reads from or writes to the FIFO while servicing these interrupts, FIFO interrupt conditions are cleared automatically.

The application must clear the OTG_GINTSTS register at initialization before unmasking the interrupt bit to avoid any interrupts generated prior to initialization.

31	30	29	28	27	26	25	24	23	22	21	20	19	18	17	16
WKUP INT	SRQ INT	DISC INT	CIDS CHG	LPM INT	PTXFE	HCINT	HPRT INT	RST DET	Res.	IPXFR/ IN COMP ISO OUT	IISOI XFR	OEP INT	IEPINT	Res.	Res.
rc_w1	rc_w1	rc_w1	rc_w1	rc_w1	r	r	r	rc_w1		rc_w1	rc_w1	r	r		

15	14	13	12	11	10	9	8	7	6	5	4	3	2	1	0
EOPF	ISOO DRP	ENUM DNE	USB RST	USB SUSP	ESUSP	Res.	Res.	GO NAK EFF	GI NAK EFF	NPTXF E	RXF LVL	SOF	OTG INT	MMIS	CMOD
rc_w1	rc_w1	rc_w1	rc_w1	rc_w1	rc_w1			r	r	r	r	rc_w1	r	rc_w1	r

Bit 31 **WKUPINT:** Resume/remote wakeup detected interrupt

Wakeup interrupt during suspend(L2) or LPM(L1) state.

– During suspend(L2):

In device mode, this interrupt is asserted when a resume is detected on the USB. In host mode, this interrupt is asserted when a remote wakeup is detected on the USB.

– During LPM(L1):

This interrupt is asserted for either host initiated resume or device initiated remote wakeup on USB.

Note: Accessible in both device and host modes.

Bit 30 **SRQINT:** Session request/new session detected interrupt

In host mode, this interrupt is asserted when a session request is detected from the device. In device mode, this interrupt is asserted when V_{BUS} is in the valid range for a B-peripheral device. Accessible in both device and host modes.

Bit 29 **DISCINT:** Disconnect detected interrupt

Asserted when a device disconnect is detected.

Note: Only accessible in host mode.

Bit 28 **CIDSCHG:** Connector ID status change

The core sets this bit when there is a change in connector ID status.

Note: Accessible in both device and host modes.

Bit 27 **LPMINT:** LPM interrupt

In device mode, this interrupt is asserted when the device receives an LPM transaction and responds with a non-ERRORed response.

In host mode, this interrupt is asserted when the device responds to an LPM transaction with a non-ERRORed response or when the host core has completed LPM transactions for the programmed number of times (RETRYCNT bit in OTG_GLPMCFG).

This field is valid only if the LPMEN bit in OTG_GLPMCFG is set to 1.

Bit 26 **PTXFE:** Periodic Tx FIFO empty

Asserted when the periodic transmit FIFO is either half or completely empty and there is space for at least one entry to be written in the periodic request queue. The half or completely empty status is determined by the periodic Tx FIFO empty level bit in the OTG_GAHBCFG register (PTXFELVL bit in OTG_GAHBCFG).

Note: Only accessible in host mode.

Bit 25 **HCINT:** Host channels interrupt

The core sets this bit to indicate that an interrupt is pending on one of the channels of the core (in host mode). The application must read the OTG_HAINT register to determine the exact number of the channel on which the interrupt occurred, and then read the corresponding OTG_HCINTx register to determine the exact cause of the interrupt. The application must clear the appropriate status bit in the OTG_HCINTx register to clear this bit.

Note: Only accessible in host mode.

Bit 24 **HPRTINT:** Host port interrupt

The core sets this bit to indicate a change in port status of one of the OTG_FS controller ports in host mode. The application must read the OTG_HPRT register to determine the exact event that caused this interrupt. The application must clear the appropriate status bit in the OTG_HPRT register to clear this bit.

Note: Only accessible in host mode.

Bit 23 **RSTDET:** Reset detected interrupt

In device mode, this interrupt is asserted when a reset is detected on the USB in partial power-down mode when the device is in suspend.

Note: Only accessible in device mode.

Bit 22 Reserved, must be kept at reset value .

Bit 21 **IPXFR:** Incomplete periodic transfer

In host mode, the core sets this interrupt bit when there are incomplete periodic transactions still pending, which are scheduled for the current frame.

INCOMPISOOUT: Incomplete isochronous OUT transfer

In device mode, the core sets this interrupt to indicate that there is at least one isochronous OUT endpoint on which the transfer is not completed in the current frame. This interrupt is asserted along with the End of periodic frame interrupt (EOPF) bit in this register.

Bit 20 **IISOIXFR:** Incomplete isochronous IN transfer

The core sets this interrupt to indicate that there is at least one isochronous IN endpoint on which the transfer is not completed in the current frame. This interrupt is asserted along with the End of periodic frame interrupt (EOPF) bit in this register.

Note: Only accessible in device mode.

Bit 19 **OEPINT:** OUT endpoint interrupt

The core sets this bit to indicate that an interrupt is pending on one of the OUT endpoints of the core (in device mode). The application must read the OTG_DAINT register to determine the exact number of the OUT endpoint on which the interrupt occurred, and then read the corresponding OTG_DOEPINTx register to determine the exact cause of the interrupt. The application must clear the appropriate status bit in the corresponding OTG_DOEPINTx register to clear this bit.

Note: Only accessible in device mode.

Bit 18 **IEPINT:** IN endpoint interrupt

The core sets this bit to indicate that an interrupt is pending on one of the IN endpoints of the core (in device mode). The application must read the OTG_DAINT register to determine the exact number of the IN endpoint on which the interrupt occurred, and then read the corresponding OTG_DIEPINTx register to determine the exact cause of the interrupt. The application must clear the appropriate status bit in the corresponding OTG_DIEPINTx register to clear this bit.

Note: Only accessible in device mode.

Bits 17:16 Reserved, must be kept at reset value.

Bit 15 **EOPF:** End of periodic frame interrupt

Indicates that the period specified in the periodic frame interval field of the OTG_DCFG register (PFIVL bit in OTG_DCFG) has been reached in the current frame.

Note: Only accessible in device mode.

Bit 14 **ISOODRP:** Isochronous OUT packet dropped interrupt

The core sets this bit when it fails to write an isochronous OUT packet into the Rx FIFO because the Rx FIFO does not have enough space to accommodate a maximum size packet for the isochronous OUT endpoint.

Note: Only accessible in device mode.

Bit 13 **ENUMDNE:** Enumeration done

The core sets this bit to indicate that speed enumeration is complete. The application must read the OTG_DSTS register to obtain the enumerated speed.

Note: Only accessible in device mode.

Bit 12 **USBRST:** USB reset

The core sets this bit to indicate that a reset is detected on the USB.

Note: Only accessible in device mode.

Bit 11 **USBSUSP:** USB suspend

The core sets this bit to indicate that a suspend was detected on the USB. The core enters the suspended state when there is no activity on the data lines for an extended period of time.

Note: Only accessible in device mode.

Bit 10 **ESUSP:** Early suspend

The core sets this bit to indicate that an Idle state has been detected on the USB for 3 ms.

Note: Only accessible in device mode.

Bits 9:8 Reserved, must be kept at reset value.

Bit 7 **GONAKEFF:** Global OUT NAK effective

Indicates that the Set global OUT NAK bit in the OTG_DCTL register (SGONAK bit in OTG_DCTL), set by the application, has taken effect in the core. This bit can be cleared by writing the Clear global OUT NAK bit in the OTG_DCTL register (CGONAK bit in OTG_DCTL).

Note: Only accessible in device mode.

Bit 6 **GINAKEFF:** Global IN non-periodic NAK effective

Indicates that the Set global non-periodic IN NAK bit in the OTG_DCTL register (SGINAK bit in OTG_DCTL), set by the application, has taken effect in the core. That is, the core has sampled the Global IN NAK bit set by the application. This bit can be cleared by clearing the Clear global non-periodic IN NAK bit in the OTG_DCTL register (CGINAK bit in OTG_DCTL).

This interrupt does not necessarily mean that a NAK handshake is sent out on the USB. The STALL bit takes precedence over the NAK bit.

Note: Only accessible in device mode.

Bit 5 **NPTXFE:** Non-periodic Tx FIFO empty

This interrupt is asserted when the non-periodic Tx FIFO is either half or completely empty, and there is space for at least one entry to be written to the non-periodic transmit request queue. The half or completely empty status is determined by the non-periodic Tx FIFO empty level bit in the OTG_GAHBCFG register (TXFELVL bit in OTG_GAHBCFG).

Note: Accessible in host mode only.

Bit 4 **RXFLVL:** Rx FIFO non-empty

Indicates that there is at least one packet pending to be read from the Rx FIFO.

Note: Accessible in both host and device modes.

Bit 3 **SOF:** Start of frame

In host mode, the core sets this bit to indicate that an SOF (FS), or Keep-Alive (LS) is transmitted on the USB. The application must write a 1 to this bit to clear the interrupt.

In device mode, in the core sets this bit to indicate that an SOF token has been received on the USB. The application can read the OTG_DSTS register to get the current frame number. This interrupt is seen only when the core is operating in FS.

Note: This register may return '1' if read immediately after power on reset. If the register bit reads '1' immediately after power on reset it does not indicate that an SOF has been sent (in case of host mode) or SOF has been received (in case of device mode). The read value of this interrupt is valid only after a valid connection between host and device is established. If the bit is set after power on reset the application can clear the bit.

Note: Accessible in both host and device modes.

Bit 2 **OTGINT:** OTG interrupt

The core sets this bit to indicate an OTG protocol event. The application must read the OTG interrupt status (OTG_GOTGINT) register to determine the exact event that caused this interrupt. The application must clear the appropriate status bit in the OTG_GOTGINT register to clear this bit.

Note: Accessible in both host and device modes.

Bit 1 **MMIS:** Mode mismatch interrupt

The core sets this bit when the application is trying to access:

– A host mode register, when the core is operating in device mode
– A device mode register, when the core is operating in host mode

The register access is completed on the AHB with an OKAY response, but is ignored by the core internally and does not affect the operation of the core.

Note: Accessible in both host and device modes.

Bit 0 **CMOD:** Current mode of operation

Indicates the current mode.

0: Device mode

1: Host mode

Note: Accessible in both host and device modes.

47.15.7 OTG interrupt mask register (OTG_GINTMSK)

Address offset: 0x018

Reset value: 0x0000 0000

This register works with the core interrupt register to interrupt the application. When an interrupt bit is masked, the interrupt associated with that bit is not generated. However, the core interrupt (OTG_GINTSTS) register bit corresponding to that interrupt is still set.

31	30	29	28	27	26	25	24	23	22	21	20	19	18	17	16
WUIM	SRQIM	DISCINT	CIDSCHGM	LPMINTM	PTXFEM	HCIM	PRTIM	RSTDETM	Res.	IPXFRM/IISOOXFRM	IISOIXFRM	OEPINT	IEPINT	Res.	Res.
rw	rw	rw	rw	rw	rw	rw	rw	rw		rw	rw	rw	rw		

15	14	13	12	11	10	9	8	7	6	5	4	3	2	1	0
EOPFM	ISOODRPM	ENUMDNEM	USBRST	USBSUSPM	ESUSPM	Res.	Res.	GONAKEFFM	GINAKEFFM	NPTXFEM	RXFLVLM	SOFM	OTGINT	MMISM	Res.
rw	rw	rw	rw	rw	rw			rw	rw	rw	rw	rw	rw	rw	

Bit 31 **WUIM:** Resume/remote wakeup detected interrupt mask
0: Masked interrupt
1: Unmasked interrupt
Note: Accessible in both host and device modes.

Bit 30 **SRQIM:** Session request/new session detected interrupt mask
0: Masked interrupt
1: Unmasked interrupt
Note: Accessible in both host and device modes.

Bit 29 **DISCINT:** Disconnect detected interrupt mask
0: Masked interrupt
1: Unmasked interrupt
Note: Only accessible in host mode.

Bit 28 **CIDSCHGM:** Connector ID status change mask
0: Masked interrupt
1: Unmasked interrupt
Note: Accessible in both host and device modes.

Bit 27 **LPMINTM:** LPM interrupt mask
0: Masked interrupt
1: Unmasked interrupt
Note: Accessible in both host and device modes.

Bit 26 **PTXFEM:** Periodic Tx FIFO empty mask
0: Masked interrupt
1: Unmasked interrupt
Note: Only accessible in host mode.

Bit 25 **HCIM:** Host channels interrupt mask
0: Masked interrupt
1: Unmasked interrupt
Note: Only accessible in host mode.

Bit 24 **PRTIM:** Host port interrupt mask
0: Masked interrupt
1: Unmasked interrupt
Note: Only accessible in host mode.

Bit 23 **RSTDETM:** Reset detected interrupt mask
0: Masked interrupt
1: Unmasked interrupt
Note: Only accessible in device mode.

Bit 22 Reserved, must be kept at reset value .

Bit 21 **IPXFRM:** Incomplete periodic transfer mask
0: Masked interrupt
1: Unmasked interrupt
Note: Only accessible in host mode.
IISOOXFRM: Incomplete isochronous OUT transfer mask
0: Masked interrupt
1: Unmasked interrupt
Note: Only accessible in device mode.

Bit 20 **IISOIXFRM:** Incomplete isochronous IN transfer mask
0: Masked interrupt
1: Unmasked interrupt
Note: Only accessible in device mode.

Bit 19 **OEPINT:** OUT endpoints interrupt mask
0: Masked interrupt
1: Unmasked interrupt
Note: Only accessible in device mode.

Bit 18 **IEPINT:** IN endpoints interrupt mask
0: Masked interrupt
1: Unmasked interrupt
Note: Only accessible in device mode.

Bits 17:16 Reserved, must be kept at reset value.

Bit 15 **EOPFM:** End of periodic frame interrupt mask
0: Masked interrupt
1: Unmasked interrupt
Note: Only accessible in device mode.

Bit 14 **ISOODRPM:** Isochronous OUT packet dropped interrupt mask
0: Masked interrupt
1: Unmasked interrupt
Note: Only accessible in device mode.

Bit 13 **ENUMDNEM:** Enumeration done mask
0: Masked interrupt
1: Unmasked interrupt
Note: Only accessible in device mode.

Bit 12 **USBRST:** USB reset mask
0: Masked interrupt
1: Unmasked interrupt
Note: Only accessible in device mode.

Bit 11 **USBSUSPM:** USB suspend mask
0: Masked interrupt
1: Unmasked interrupt
Note: Only accessible in device mode.

Bit 10 **ESUSPM:** Early suspend mask
0: Masked interrupt
1: Unmasked interrupt
Note: Only accessible in device mode.

Bits 9:8 Reserved, must be kept at reset value.

Bit 7 **GONAKEFFM:** Global OUT NAK effective mask
0: Masked interrupt
1: Unmasked interrupt
Note: Only accessible in device mode.

Bit 6 **GINAKEFFM:** Global non-periodic IN NAK effective mask
0: Masked interrupt
1: Unmasked interrupt
Note: Only accessible in device mode.

Bit 5 **NPTXFEM:** Non-periodic Tx FIFO empty mask
0: Masked interrupt
1: Unmasked interrupt
Note: Only accessible in host mode.

Bit 4 **RXFLVLM:** Receive FIFO non-empty mask
0: Masked interrupt
1: Unmasked interrupt
Note: Accessible in both device and host modes.

Bit 3 **SOFM:** Start of frame mask
0: Masked interrupt
1: Unmasked interrupt
Note: Accessible in both device and host modes.

Bit 2 **OTGINT:** OTG interrupt mask
0: Masked interrupt
1: Unmasked interrupt
Note: Accessible in both device and host modes.

Bit 1 **MMISM:** Mode mismatch interrupt mask
0: Masked interrupt
1: Unmasked interrupt
Note: Accessible in both device and host modes.

Bit 0 Reserved, must be kept at reset value.

47.15.8 OTG receive status debug read register (OTG_GRXSTSR)

Address offset for read: 0x01C

Reset value: 0x0000 0000

This description is for register OTG_GRXSTSR in Device mode.

A read to the receive status debug read register returns the contents of the top of the receive FIFO.

The core ignores the receive status read when the receive FIFO is empty and returns a value of 0x0000 0000.

31	30	29	28	27	26	25	24	23	22	21	20	19	18	17	16
Res.	Res.	Res.	Res.	STSPHST	Res.	Res.	FRMNUM[3:0]				PKTSTS[3:0]				DPID[1]
				r			r	r	r	r	r	r	r	r	r

15	14	13	12	11	10	9	8	7	6	5	4	3	2	1	0
DPID[0]	BCNT[10:0]											EPNUM[3:0]			
r	r	r	r	r	r	r	r	r	r	r	r	r	r	r	r

Bits 31:28 Reserved, must be kept at reset value.

Bit 27 **STSPHST:** Status phase start

Indicates the start of the status phase for a control write transfer. This bit is set along with the OUT transfer completed PKTSTS pattern.

Bits 26:25 Reserved, must be kept at reset value.

Bits 24:21 **FRMNUM[3:0]:** Frame number

This is the least significant 4 bits of the frame number in which the packet is received on the USB. This field is supported only when isochronous OUT endpoints are supported.

Bits 20:17 **PKTSTS[3:0]:** Packet status

Indicates the status of the received packet
0001: Global OUT NAK (triggers an interrupt)
0010: OUT data packet received
0011: OUT transfer completed (triggers an interrupt)
0100: SETUP transaction completed (triggers an interrupt)
0110: SETUP data packet received
Others: Reserved

Bits 16:15 **DPID[1:0]:** Data PID

Indicates the data PID of the received OUT data packet
00: DATA0
10: DATA1

Bits 14:4 **BCNT[10:0]:** Byte count

Indicates the byte count of the received data packet.

Bits 3:0 **EPNUM[3:0]:** Endpoint number

Indicates the endpoint number to which the current received packet belongs.

47.15.9 OTG receive status debug read [alternate] (OTG_GRXSTSR)

Address offset for read: 0x01C

Reset value: 0x0000 0000

This description is for register OTG_GRXSTSR in Host mode.

A read to the receive status debug read register returns the contents of the top of the receive FIFO.

The core ignores the receive status read when the receive FIFO is empty and returns a value of 0x0000 0000.

31	30	29	28	27	26	25	24	23	22	21	20	19	18	17	16
Res.	Res.	Res.	Res.	Res.	Res.	Res.	Res.	Res.	Res.	Res.	PKTSTS[3:0]				DPID
											r	r	r	r	r

15	14	13	12	11	10	9	8	7	6	5	4	3	2	1	0
DPID	BCNT[10:0]											CHNUM[3:0]			
r	r	r	r	r	r	r	r	r	r	r	r	r	r	r	r

Bits 31:21 Reserved, must be kept at reset value.

Bits 20:17 **PKTSTS[3:0]:** Packet status

Indicates the status of the received packet
0010: IN data packet received
0011: IN transfer completed (triggers an interrupt)
0101: Data toggle error (triggers an interrupt)
0111: Channel halted (triggers an interrupt)
Others: Reserved

Bits 16:15 **DPID[1:0]:** Data PID

Indicates the data PID of the received packet
00: DATA0
10: DATA1

Bits 14:4 **BCNT[10:0]:** Byte count

Indicates the byte count of the received IN data packet.

Bits 3:0 **CHNUM[3:0]:** Channel number

Indicates the channel number to which the current received packet belongs.

47.15.10 OTG status read and pop registers (OTG_GRXSTSP)

Address offset for pop: 0x020

Reset value: 0x0000 0000

This description is for register OTG_GRXSTSP in Device mode.

Similarly to OTG_GRXSTSR (receive status debug read register) where a read returns the contents of the top of the receive FIFO, a read to OTG_GRXSTSP (receive status read and pop register) additionally pops the top data entry out of the Rx FIFO.

The core ignores the receive status pop/read when the receive FIFO is empty and returns a value of 0x0000 0000. The application must only pop the receive status FIFO when the receive FIFO non-empty bit of the core interrupt register (RXFLVL bit in OTG_GINTSTS) is asserted.

31	30	29	28	27	26	25	24	23	22	21	20	19	18	17	16
Res.	Res.	Res.	Res.	STSPHST	Res.	Res.	FRMNUM[3:0]				PKTSTS[3:0]				DPID[1]
				r			r	r	r	r	r	r	r	r	r

15	14	13	12	11	10	9	8	7	6	5	4	3	2	1	0
DPID[0]	BCNT[10:0]											EPNUM[3:0]			
r	r	r	r	r	r	r	r	r	r	r	r	r	r	r	r

Bits 31:28 Reserved, must be kept at reset value.

Bit 27 **STSPHST:** Status phase start

Indicates the start of the status phase for a control write transfer. This bit is set along with the OUT transfer completed PKTSTS pattern.

Bits 26:25 Reserved, must be kept at reset value.

Bits 24:21 **FRMNUM[3:0]:** Frame number

This is the least significant 4 bits of the frame number in which the packet is received on the USB. This field is supported only when isochronous OUT endpoints are supported.

Bits 20:17 **PKTSTS[3:0]:** Packet status

Indicates the status of the received packet
0001: Global OUT NAK (triggers an interrupt)
0010: OUT data packet received
0011: OUT transfer completed (triggers an interrupt)
0100: SETUP transaction completed (triggers an interrupt)
0110: SETUP data packet received
Others: Reserved

Bits 16:15 **DPID[1:0]:** Data PID

Indicates the data PID of the received OUT data packet
00: DATA0
10: DATA1

Bits 14:4 **BCNT[10:0]:** Byte count

Indicates the byte count of the received data packet.

Bits 3:0 **EPNUM[3:0]:** Endpoint number

Indicates the endpoint number to which the current received packet belongs.

47.15.11 OTG status read and pop registers [alternate] (OTG_GRXSTSP)

Address offset for pop: 0x020

Reset value: 0x0000 0000

This description is for register OTG_GRXSTSP in Host mode.

Similarly to OTG_GRXSTSR (receive status debug read register) where a read returns the contents of the top of the receive FIFO, a read to OTG_GRXSTSP (receive status read and pop register) additionally pops the top data entry out of the Rx FIFO.

The core ignores the receive status pop/read when the receive FIFO is empty and returns a value of 0x0000 0000. The application must only pop the receive status FIFO when the receive FIFO non-empty bit of the core interrupt register (RXFLVL bit in OTG_GINTSTS) is asserted.

31	30	29	28	27	26	25	24	23	22	21	20	19	18	17	16
Res.	Res.	Res.	Res.	Res.	Res.	Res.	Res.	Res.	Res.	Res.	PKTSTS[3:0]				DPID
											r	r	r	r	r

15	14	13	12	11	10	9	8	7	6	5	4	3	2	1	0
DPID	BCNT[10:0]											CHNUM[3:0]			
r	r	r	r	r	r	r	r	r	r	r	r	r	r	r	r

Bits 31:21 Reserved, must be kept at reset value.

Bits 20:17 **PKTSTS[3:0]:** Packet status

Indicates the status of the received packet
0010: IN data packet received
0011: IN transfer completed (triggers an interrupt)
0101: Data toggle error (triggers an interrupt)
0111: Channel halted (triggers an interrupt)
Others: Reserved

Bits 16:15 **DPID[1:0]:** Data PID

Indicates the data PID of the received packet
00: DATA0
10: DATA1

Bits 14:4 **BCNT[10:0]:** Byte count

Indicates the byte count of the received IN data packet.

Bits 3:0 **CHNUM[3:0]:** Channel number

Indicates the channel number to which the current received packet belongs.

47.15.12 OTG receive FIFO size register (OTG_GRXFSIZ)

Address offset: 0x024

Reset value: 0x0000 0200

The application can program the RAM size that must be allocated to the Rx FIFO.

31	30	29	28	27	26	25	24	23	22	21	20	19	18	17	16
Res.	Res.	Res.	Res.	Res.	Res.	Res.	Res.	Res.	Res.	Res.	Res.	Res.	Res.	Res.	Res.
15	14	13	12	11	10	9	8	7	6	5	4	3	2	1	0
RXFD[15:0]															
rw	rw	rw	rw	rw	rw	rw	rw	rw	rw	rw	rw	rw	rw	rw	rw

Bits 31:16 Reserved, must be kept at reset value.

Bits 15:0 **RXFD[15:0]:** Rx FIFO depth
This value is in terms of 32-bit words.
Minimum value is 16
Programmed values must respect the available FIFO memory allocation and must not exceed the power-on value.

47.15.13 OTG host non-periodic transmit FIFO size register (OTG_HNPTXFSIZ)/Endpoint 0 Transmit FIFO size (OTG_DIEPTXF0)

Address offset: 0x028

Reset value: 0x0200 0200

31	30	29	28	27	26	25	24	23	22	21	20	19	18	17	16
NPTXFD/TX0FD[15:0]															
rw	rw	rw	rw	rw	rw	rw	rw	rw	rw	rw	rw	rw	rw	rw	rw
15	14	13	12	11	10	9	8	7	6	5	4	3	2	1	0
NPTXFSA/TX0FSA[15:0]															
rw	rw	rw	rw	rw	rw	rw	rw	rw	rw	rw	rw	rw	rw	rw	rw

Host mode

Bits 31:16 **NPTXFD[15:0]:** Non-periodic Tx FIFO depth
This value is in terms of 32-bit words.
Minimum value is 16
Programmed values must respect the available FIFO memory allocation and must not exceed the power-on value.

Bits 15:0 **NPTXFSA[15:0]:** Non-periodic transmit RAM start address
This field configures the memory start address for non-periodic transmit FIFO RAM.

Device mode

Bits 31:16 **TX0FD:** Endpoint 0 Tx FIFO depth
This value is in terms of 32-bit words.
Minimum value is 16
Programmed values must respect the available FIFO memory allocation and must not exceed the power-on value.

Bits 15:0 **TX0FSA:** Endpoint 0 transmit RAM start address
This field configures the memory start address for the endpoint 0 transmit FIFO RAM.

47.15.14 OTG non-periodic transmit FIFO/queue status register (OTG_HNPTXSTS)

Address offset: 0x02C

Reset value: 0x0008 0200

Note: In device mode, this register is not valid.

This read-only register contains the free space information for the non-periodic Tx FIFO and the non-periodic transmit request queue.

31	30	29	28	27	26	25	24	23	22	21	20	19	18	17	16
Res.	NPTXQTOP[6:0]							NPTQXSAV[7:0]							
	r	r	r	r	r	r	r	r	r	r	r	r	r	r	r

15	14	13	12	11	10	9	8	7	6	5	4	3	2	1	0
NPTXFSAV[15:0]															
r	r	r	r	r	r	r	r	r	r	r	r	r	r	r	r

Bit 31 Reserved, must be kept at reset value.

Bits 30:24 **NPTXQTOP[6:0]:** Top of the non-periodic transmit request queue
Entry in the non-periodic Tx request queue that is currently being processed by the MAC.
Bits 30:27: Channel/endpoint number
Bits 26:25:
00: IN/OUT token
01: Zero-length transmit packet (device IN/host OUT)
11: Channel halt command
Bit 24: Terminate (last entry for selected channel/endpoint)

Bits 23:16 **NPTQXSAV[7:0]:** Non-periodic transmit request queue space available
Indicates the amount of free space available in the non-periodic transmit request queue. This queue holds both IN and OUT requests.
0: Non-periodic transmit request queue is full
1: 1 location available
2: locations available
n: n locations available (0 ≤ n ≤ 8)
Others: Reserved

Bits 15:0 **NPTXFSAV[15:0]:** Non-periodic Tx FIFO space available
Indicates the amount of free space available in the non-periodic Tx FIFO.
Values are in terms of 32-bit words.
0: Non-periodic Tx FIFO is full
1: 1 word available
2: 2 words available
n: n words available (where 0 ≤ n ≤ 512)
Others: Reserved

47.15.15 OTG general core configuration register (OTG_GCCFG)

Address offset: 0x038

Reset value: 0x0000 XXXX

31	30	29	28	27	26	25	24	23	22	21	20	19	18	17	16
Res.	Res.	Res.	Res.	Res.	Res.	Res.	Res.	Res.	Res.	VBDEN	SDEN	PDEN	DCD EN	BCDEN	PWR DWN
										rw	rw	rw	rw	rw	rw

15	14	13	12	11	10	9	8	7	6	5	4	3	2	1	0
Res.	Res.	Res.	Res.	Res.	Res.	Res.	Res.	Res.	Res.	Res.	Res.	PS2 DET	SDET	PDET	DCDET
												r	r	r	r

Bits 31:22 Reserved, must be kept at reset value.

Bit 21 **VBDEN:** USB V_{BUS} detection enable

Enables V_{BUS} sensing comparators to detect V_{BUS} valid levels on the V_{BUS} PAD for USB host and device operation. If HNP and/or SRP support is enabled, V_{BUS} comparators are automatically enabled independently of VBDEN value.

0 = V_{BUS} detection disabled

1 = V_{BUS} detection enabled

Bit 20 **SDEN:** Secondary detection (SD) mode enable

This bit is set by the software to put the BCD into SD mode. Only one detection mode (DCD, PD, SD or OFF) should be selected to work correctly

Bit 19 **PDEN:** Primary detection (PD) mode enable

This bit is set by the software to put the BCD into PD mode. Only one detection mode (DCD, PD, SD or OFF) should be selected to work correctly.

Bit 18 **DCDEN:** Data contact detection (DCD) mode enable

This bit is set by the software to put the BCD into DCD mode. Only one detection mode (DCD, PD, SD or OFF) should be selected to work correctly.

Bit 17 **BCDEN:** Battery charging detector (BCD) enable

This bit is set by the software to enable the BCD support within the USB device. When enabled, the USB PHY is fully controlled by BCD and cannot be used for normal communication. Once the BCD discovery is finished, the BCD should be placed in OFF mode by clearing this bit to ‘0’ in order to allow the normal USB operation.

Bit 16 **PWRDWN:** Power down control

Used to activate the transceiver in transmission/reception. When reset, the transceiver is kept in power-down. When set, the BCD function must be off (BCDEN=0).

0 = USB FS transceiver disabled

1 = USB FS transceiver enabled

Bits 15:4 Reserved, must be kept at reset value.

Bit 3 **PS2DET:** DM pull-up detection status

This bit is active only during PD and gives the result of comparison between DM voltage level and VLGC threshold. In normal situation, the DM level should be below this threshold. If it is above, it means that the DM is externally pulled high. This can be caused by connection to a PS2 port (which pulls-up both DP and DM lines) or to some proprietary charger not following the BCD specification.

0: Normal port detected (connected to SDP, CDP or DCP)

1: PS2 port or proprietary charger detected

Bit 2 **SDET:** Secondary detection (SD) status

This bit gives the result of SD.

0: CDP detected

1: DCP detected

Bit 1 **PDET:** Primary detection (PD) status

This bit gives the result of PD.

0: no BCD support detected (connected to SDP or proprietary device).

1: BCD support detected (connected to CDP or DCP).

Bit 0 **DCDET:** Data contact detection (DCD) status

This bit gives the result of DCD.

0: data lines contact not detected

1: data lines contact detected

47.15.16 OTG core ID register (OTG_CID)

Address offset: 0x03C

Reset value: 0x0000 2000

This is a register containing the Product ID as reset value.

31	30	29	28	27	26	25	24	23	22	21	20	19	18	17	16
PRODUCT_ID[31:16]															
rw	rw	rw	rw	rw	rw	rw	rw	rw	rw	rw	rw	rw	rw	rw	rw
15	14	13	12	11	10	9	8	7	6	5	4	3	2	1	0
PRODUCT_ID[15:0]															
rw	rw	rw	rw	rw	rw	rw	rw	rw	rw	rw	rw	rw	rw	rw	rw

Bits 31:0 **PRODUCT_ID[31:0]:** Product ID field
Application-programmable ID field.

47.15.17 OTG core LPM configuration register (OTG_GLPMCFG)

Address offset: 0x54

Reset value: 0x0000 0000

31	30	29	28	27	26	25	24	23	22	21	20	19	18	17	16
Res.	Res.	Res.	EN BESL	LPMRCNTSTS[2:0]			SND LPM	LPMRCNT[2:0]			LPMCHIDX[3:0]				L1RSM OK
			rw	r	r	r	rs	rw	rw	rw	rw	rw	rw	rw	r
15	14	13	12	11	10	9	8	7	6	5	4	3	2	1	0
SLP STS	LPMRSP[1:0]		L1DS EN	BESLTHRS[3:0]				L1SS EN	REM WAKE	BESL[3:0]				LPM ACK	LPM EN
r	r	r	rw	rw	rw	rw	rw	rw	rw/r	rw/r	rw/r	rw/r	rw/r	rw	rw

Bits 31:29 Reserved, must be kept at reset value.

Bit 28 **ENBESL:** Enable best effort service latency
This bit enables the BESL feature as defined in the LPM errata:
0:The core works as described in the following document:
USB 2.0 Link Power Management Addendum Engineering Change Notice to the USB 2.0 specification, July 16, 2007
1:The core works as described in the LPM Errata:
Errata for USB 2.0 ECN: Link Power Management (LPM) - 7/2007

Note: Only the updated behavior (described in LPM Errata) is considered in this document and so the ENBESL bit should be set to '1' by application SW.

Bits 27:25 **LPMRCNTSTS[2:0]:** LPM retry count status
Number of LPM host retries still remaining to be transmitted for the current LPM sequence.

Note: Accessible only in host mode.

Bit 24 **SNDLPM:** Send LPM transaction

When the application software sets this bit, an LPM transaction containing two tokens, EXT and LPM is sent. The hardware clears this bit once a valid response (STALL, NYET, or ACK) is received from the device or the core has finished transmitting the programmed number of LPM retries.

Note: This bit must be set only when the host is connected to a local port.

Note: Accessible only in host mode.

Bits 23:21 **LPMRCNT[2:0]:** LPM retry count

When the device gives an ERROR response, this is the number of additional LPM retries that the host performs until a valid device response (STALL, NYET, or ACK) is received.

Note: Accessible only in host mode.

Bits 20:17 **LPMCHIDX[3:0]:** LPM Channel Index

The channel number on which the LPM transaction has to be applied while sending an LPM transaction to the local device. Based on the LPM channel index, the core automatically inserts the device address and endpoint number programmed in the corresponding channel into the LPM transaction.

Note: Accessible only in host mode.

Bit 16 **L1RSMOK:** Sleep state resume OK

Indicates that the device or host can start resume from Sleep state. This bit is valid in LPM sleep (L1) state. It is set in sleep mode after a delay of 50 µs ($T_{L1Residency}$).

This bit is reset when SLPSTS is 0.

1: The application or host can start resume from Sleep state

0: The application or host cannot start resume from Sleep state

Bit 15 **SLPSTS:** Port sleep status

Device mode:

This bit is set as long as a Sleep condition is present on the USB bus. The core enters the Sleep state when an ACK response is sent to an LPM transaction and the $T_{L1TokenRetry}$ timer has expired. To stop the PHY clock, the application must set the STPPCLK bit in OTG_PCGCCTL, which asserts the PHY suspend input signal.

The application must rely on SLPSTS and not ACK in LPMRSP to confirm transition into sleep.

The core comes out of sleep:

– When there is any activity on the USB linestate

– When the application writes to the RWUSIG bit in OTG_DCTL or when the application resets or soft-disconnects the device.

Host mode:

The host transitions to Sleep (L1) state as a side-effect of a successful LPM transaction by the core to the local port with ACK response from the device. The read value of this bit reflects the current Sleep status of the port.

The core clears this bit after:

– The core detects a remote L1 wakeup signal,

– The application sets the PRST bit or the PRES bit in the OTG_HPRT register, or

– The application sets the L1Resume/ remote wakeup detected interrupt bit or disconnect detected interrupt bit in the core interrupt register (WKUPINT or DISCINT bit in OTG_GINTSTS, respectively).

0: Core not in L1

1: Core in L1

Bits 14:13 **LPMRSP[1:0]:** LPM response

Device mode:

The response of the core to LPM transaction received is reflected in these two bits.

Host mode:

Handshake response received from local device for LPM transaction

11: ACK

10: NYET

01: STALL

00: ERROR (No handshake response)

Bit 12 **L1DSEN:** L1 deep sleep enable

Enables suspending the PHY in L1 Sleep mode. For maximum power saving during L1 Sleep mode, this bit should be set to '1' by application SW in all the cases.

Bits 11:8 **BESLTHRS[3:0]:** BESL threshold

Device mode:

The core puts the PHY into deep low power mode in L1 when BESL value is greater than or equal to the value defined in this field BESL_Thres[3:0].

Host mode:

The core puts the PHY into deep low power mode in L1. BESLTHRS[3:0] specifies the time for which resume signaling is to be reflected by host ($T_{L1HubDrvResume2}$) on the USB bus when it detects device initiated resume.

BESLTHRS must not be programmed with a value greater than 1100b in host mode, because this exceeds maximum $T_{L1HubDrvResume2}$.

Thres[3:0] host mode resume signaling time (µs):

0000: 75

0001: 100

0010: 150

0011: 250

0100: 350

0101: 450

0110: 950

All other values: reserved

Bit 7 **L1SSEN:** L1 Shallow Sleep enable

Enables suspending the PHY in L1 Sleep mode. For maximum power saving during L1 Sleep mode, this bit should be set to '1' by application SW in all the cases.

Bit 6 **REMWAKE:** bRemoteWake value

Host mode:

The value of remote wake up to be sent in the wIndex field of LPM transaction.

Device mode (read-only):

This field is updated with the received LPM token bRemoteWake bmAttribute when an ACK, NYET, or STALL response is sent to an LPM transaction.

Bits 5:2 **BESL[3:0]:** Best effort service latency

Host mode:

The value of BESL to be sent in an LPM transaction. This value is also used to initiate resume for a duration $T_{L1HubDrvResume1}$ for host initiated resume.

Device mode (read-only):

This field is updated with the received LPM token BESL bmAttribute when an ACK, NYET, or STALL response is sent to an LPM transaction.

BESL[3:0]T_{BESL} (µs)

0000: 125
0001: 150
0010: 200
0011: 300
0100: 400
0101: 500
0110: 1000
0111: 2000
1000: 3000
1001: 4000
1010: 5000
1011: 6000
1100: 7000
1101: 8000
1110: 9000
1111: 10000

Bit 1 **LPMACK:** LPM token acknowledge enable

Handshake response to LPM token preprogrammed by device application software.

1: ACK

Even though ACK is preprogrammed, the core device responds with ACK only on successful LPM transaction. The LPM transaction is successful if:

– No PID/CRC5 errors in either EXT token or LPM token (else ERROR)
– Valid bLinkState = 0001B (L1) received in LPM transaction (else STALL)
– No data pending in transmit queue (else NYET).

0: NYET

The preprogrammed software bit is over-ridden for response to LPM token when:

– The received bLinkState is not L1 (STALL response), or
– An error is detected in either of the LPM token packets because of corruption (ERROR response).

Note: Accessible only in device mode.

Bit 0 **LPMEN:** LPM support enable

The application uses this bit to control the OTG_FS core LPM capabilities.

If the core operates as a non-LPM-capable host, it cannot request the connected device or hub to activate LPM mode.

If the core operates as a non-LPM-capable device, it cannot respond to any LPM transactions.

0: LPM capability is not enabled

1: LPM capability is enabled

47.15.18 OTG power down register (OTG_GPWRDN)

Address offset: 0x058

Reset value: 0x0000 0010

31	30	29	28	27	26	25	24	23	22	21	20	19	18	17	16
Res.	Res.	Res.	Res.	Res.	Res.	Res.	Res.	ADPIF	Res.	Res.	Res.	Res.	Res.	Res.	Res.
								rc_w1							

15	14	13	12	11	10	9	8	7	6	5	4	3	2	1	0
Res.	Res.	Res.	Res.	Res.	Res.	Res.	Res.	Res.	Res.	Res.	Res.	Res.	Res.	Res.	ADPMEN
															rw

Bits 31:24 Reserved, must be kept at reset value.

Bit 23 **ADPIF:** ADP interrupt flag
This bit is set whenever there is an ADP event

Bits 22:1 Reserved, must be kept at reset value.

Bit 0 **ADPMEN:** ADP module enable
This bit enables or disables the ADP logic.
0: Disable ADP module
1: Enable ADP module

47.15.19 OTG ADP timer, control and status register (OTG_GADPCTL)

Address offset: 0x060

Reset value: 0x0000 0000

The OTG_GADPCTL register must be accessed as follows:

- In order to read from the OTG_GADPCTL register, program AR=0b01 and keep polling till AR=0b00. The core updates the other fields of this register and makes AR=0b00. Read values of this register are valid only when AR=0b00.
- In order to write to the OTG_GADPCTL register, program AR=0b10 along with the values for the other fields and keep polling till AR=0b00. When AR becomes 0b00, it means that the programmed value has taken effect inside the core.

31	30	29	28	27	26	25	24	23	22	21	20	19	18	17	16
Res.	Res.	Res.	AR		ADP TOIM	ADP SNSIM	ADP PRBIM	ADP TOIF	ADP SNSIF	ADP PRBIF	ADPEN	ADP RST	ENA SNS	ENA PRB	RTIM
			rw	rw	rw	rw	rw	rc_w1	rc_w1	rc_w1	rw	rs	rw	rw	r

15	14	13	12	11	10	9	8	7	6	5	4	3	2	1	0
RTIM										PRBPER		PRBDELTA		PRBDSCHG	
r	r	r	r	r	r	r	r	r	r	rw	rw	rw	rw	rw	rw

Bits 31:29 Reserved, must be kept at reset value.

Bits 28:27 **AR:** Access request

This bitfield define the requested access mode to the OTG_GADPCTL register:
00 Read / write valid (updated by the core)
01 Read request
10 Write request
11 Reserved

Bit 26 **ADPTOIM:** ADP timeout interrupt mask

When this bit is set, it unmasks the interrupt from ADPTOIF.

Bit 25 **ADPSNSIM**: ADP sense interrupt mask

When this bit is set, it unmasks the interrupt from ADPSNSIF.

Bit 24 **ADPPRBIM**: ADP probe interrupt mask

When this bit is set, it unmasks the interrupt from ADPPRBIF.

Bit 23 **ADPTOIF**: ADP timeout interrupt flag

This bit is relevant only for an ADP probe. When this bit is set, it means that the ramp time has completed (RTIM has reached its terminal value of 0x7FF). This is a debug feature that allows the application to read the ramp time after each cycle.

Bit 22 **ADPSNSIF:** ADP sense interrupt flag

When this bit is set, it means that the V_{BUS} voltage is greater than V_{ADPSNS} value or that V_{ADPSNS} is reached.

Bit 21 **ADPPRBIF:** ADP probe interrupt flag

When this bit is set, it means that the V_{BUS} voltage is greater than V_{ADPPRB} or that V_{ADPPRB} is reached.

Bit 20 **ADPEN:** ADP enable

When set, the core performs either ADP probing or sensing based on ENAPRB or ENASNS.

Bit 19 **ADPRST:** ADP reset

When set, ADP controller is reset. This bit is auto-cleared after the reset procedure is complete in the ADP controller.

Bit 18 **ENASNS:** Enable sense

When programmed to 1, the core performs a sense operation.

Bit 17 **ENAPRB:** Enable probe

When programmed to 1, the core performs a probe operation.

Bits 16:6 **RTIM:** Ramp time

These bits capture the latest time it took for V_{BUS} to ramp from $V_{ADPSINK}$ to V_{ADPPRB}. The bits are defined in units of 32 kHz clock cycles as follow:
000: 1 cycle
001: 2 cycles
002: 3 cycles
...
7FF: 2048 cycles
A time of 1024 cycles at 32 kHz corresponds to a time of 32 ms.

Bits 5:4 **PRBPER:** Probe period

These bits sets the T_{ADPPRD} as follow:
00: 0.625 to 0.925 sec (typical 0.775 sec)
01: 1.25 to 1.85 sec (typical 1.55 sec)
10: 1.9 to 2.6 sec (typical 2.275 sec)
11: Reserved

Bits 3:2 **PRBDELTA:** Probe delta

These bits set the resolution for RTIM value. The bits are defined in units of 32 kHz clock cycles as follow:
00: 1 cycle
01: 2 cycles
10: 3 cycles
11: 4 cycles
For example if this value is chosen to be 01, it means that RTIM increments for every two 32 kHz clock cycles.

Bits 1:0 **PRBDSCHG:** Probe discharge

These bits set the times for T_{ADP_DSCHG}. These bits are defined as follow:
00: 4 ms
01: 8 ms
10: 16 ms
11: 32 ms

47.15.20 OTG host periodic transmit FIFO size register (OTG_HPTXFSIZ)

Address offset: 0x100

Reset value: 0x0200 0400

31	30	29	28	27	26	25	24	23	22	21	20	19	18	17	16
PTXFSIZ[15:0]															
rw	rw	rw	rw	rw	rw	rw	rw	rw	rw	rw	rw	rw	rw	rw	rw
15	14	13	12	11	10	9	8	7	6	5	4	3	2	1	0
PTXSA[15:0]															
rw	rw	rw	rw	rw	rw	rw	rw	rw	rw	rw	rw	rw	rw	rw	rw

Bits 31:16 **PTXFSIZ[15:0]:** Host periodic Tx FIFO depth

This value is in terms of 32-bit words.
Minimum value is 16

Bits 15:0 **PTXSA[15:0]:** Host periodic Tx FIFO start address

This field configures the memory start address for periodic transmit FIFO RAM.

47.15.21 OTG device IN endpoint transmit FIFO x size register (OTG_DIEPTXFx)

Address offset: 0x104 + 0x04 * (x - 1), (x = 1 to 5)

Reset value: Block 1: 0x0200 0400

Reset value: Block 2: 0x0200 0600

Reset value: Block 3: 0x0200 0800

Reset value: Block 4: 0x0200 0A00

Reset value: Block 5: 0x0200 0C00

31	30	29	28	27	26	25	24	23	22	21	20	19	18	17	16
INEPTXFD[15:0]															
rw	rw	rw	rw	rw	rw	rw	rw	rw	rw	rw	rw	rw	rw	rw	rw
15	14	13	12	11	10	9	8	7	6	5	4	3	2	1	0
INEPTXSA[15:0]															
rw	rw	rw	rw	rw	rw	rw	rw	rw	rw	rw	rw	rw	rw	rw	rw

Bits 31:16 **INEPTXFD[15:0]:** IN endpoint Tx FIFO depth
This value is in terms of 32-bit words.
Minimum value is 16

Bits 15:0 **INEPTXSA[15:0]:** IN endpoint FIFOx transmit RAM start address
This field contains the memory start address for IN endpoint transmit FIFOx. The address must be aligned with a 32-bit memory location.

47.15.22 Host-mode registers

Bit values in the register descriptions are expressed in binary unless otherwise specified.

Host-mode registers affect the operation of the core in the host mode. Host mode registers must not be accessed in device mode, as the results are undefined. Host mode registers can be categorized as follows:

47.15.23 OTG host configuration register (OTG_HCFG)

Address offset: 0x400

Reset value: 0x0000 0000

This register configures the core after power-on. Do not make changes to this register after initializing the host.

31	30	29	28	27	26	25	24	23	22	21	20	19	18	17	16
Res.	Res.	Res.	Res.	Res.	Res.	Res.		Res.	Res.	Res.	Res.	Res.	Res.	Res.	Res.
15	14	13	12	11	10	9	8	7	6	5	4	3	2	1	0
Res.	Res.	Res.	Res.	Res.	Res.	Res.	Res.	Res.	Res.	Res.	Res.	Res.	FSLSS	FSLSPCS[1:0]	
													r	rw	rw

Bits 31:3 Reserved, must be kept at reset value.

Bit 2 **FSLSS:** FS- and LS-only support

The application uses this bit to control the core's enumeration speed. Using this bit, the application can make the core enumerate as an FS host, even if the connected device supports HS traffic. Do not make changes to this field after initial programming.

1: FS/LS-only, even if the connected device can support HS (read-only).

Bits 1:0 **FSLSPCS[1:0]:** FS/LS PHY clock select

When the core is in FS host mode

01: PHY clock is running at 48 MHz

Others: Reserved

When the core is in LS host mode

00: Reserved

01: Select 48 MHz PHY clock frequency

10: Select 6 MHz PHY clock frequency

11: Reserved

Note: The FSLSPCS must be set on a connection event according to the speed of the connected device (after changing this bit, a software reset must be performed).

47.15.24 OTG host frame interval register (OTG_HFIR)

Address offset: 0x404

Reset value: 0x0000 EA60

This register stores the frame interval information for the current speed to which the OTG_FS controller has enumerated.

31	30	29	28	27	26	25	24	23	22	21	20	19	18	17	16
Res.	Res.	Res.	Res.	Res.	Res.	Res.	Res.	Res.	Res.	Res.	Res.	Res.	Res.	Res.	RLD CTRL
															rw

15	14	13	12	11	10	9	8	7	6	5	4	3	2	1	0
FRIVL[15:0]															
rw	rw	rw	rw	rw	rw	rw	rw	rw	rw	rw	rw	rw	rw	rw	rw

Bits 31:17 Reserved, must be kept at reset value.

Bit 16 **RLDCTRL:** Reload control

This bit allows dynamic reloading of the HFIR register during run time.
0: The HFIR cannot be reloaded dynamically
1: The HFIR can be dynamically reloaded during run time.
This bit needs to be programmed during initial configuration and its value must not be changed during run time.

Caution: RLDCTRL = 0 is not recommended.

Bits 15:0 **FRIVL[15:0]:** Frame interval

The value that the application programs to this field, specifies the interval between two consecutive SOFs (FS) or Keep-Alive tokens (LS). This field contains the number of PHY clocks that constitute the required frame interval. The application can write a value to this register only after the port enable bit of the host port control and status register (PENA bit in OTG_HPRT) has been set. If no value is programmed, the core calculates the value based on the PHY clock specified in the FS/LS PHY clock select field of the host configuration register (FSLSPCS in OTG_HCFG). Do not change the value of this field after the initial configuration, unless the RLDCTRL bit is set. In such case, the FRIVL is reloaded with each SOF event.

– Frame interval = 1 ms × (FRIVL - 1)

47.15.25 OTG host frame number/frame time remaining register (OTG_HFNUM)

Address offset: 0x408

Reset value: 0x0000 3FFF

This register indicates the current frame number. It also indicates the time remaining (in terms of the number of PHY clocks) in the current frame.

31	30	29	28	27	26	25	24	23	22	21	20	19	18	17	16
FTREM[15:0]															
r	r	r	r	r	r	r	r	r	r	r	r	r	r	r	r
15	14	13	12	11	10	9	8	7	6	5	4	3	2	1	0
FRNUM[15:0]															
r	r	r	r	r	r	r	r	r	r	r	r	r	r	r	r

Bits 31:16 **FTREM[15:0]:** Frame time remaining

Indicates the amount of time remaining in the current frame, in terms of PHY clocks. This field decrements on each PHY clock. When it reaches zero, this field is reloaded with the value in the Frame interval register and a new SOF is transmitted on the USB.

Bits 15:0 **FRNUM[15:0]:** Frame number

This field increments when a new SOF is transmitted on the USB, and is cleared to 0 when it reaches 0x3FFF.

47.15.26 OTG_Host periodic transmit FIFO/queue status register (OTG_HPTXSTS)

Address offset: 0x410

Reset value: 0x0008 0100

This read-only register contains the free space information for the periodic Tx FIFO and the periodic transmit request queue.

31	30	29	28	27	26	25	24	23	22	21	20	19	18	17	16
PTXQTOP[7:0]								PTXQSAV[7:0]							
r	r	r	r	r	r	r	r	r	r	r	r	r	r	r	r
15	14	13	12	11	10	9	8	7	6	5	4	3	2	1	0
PTXFSAVL[15:0]															
r	r	r	r	r	r	r	r	r	r	r	r	r	r	r	r

Bits 31:24 **PTXQTOP[7:0]:** Top of the periodic transmit request queue

This indicates the entry in the periodic Tx request queue that is currently being processed by the MAC.

This register is used for debugging.

Bit 31: Odd/Even frame

0: send in even frame

1: send in odd frame

Bits 30:27: Channel/endpoint number

Bits 26:25: Type

00: IN/OUT

01: Zero-length packet

11: Disable channel command

Bit 24: Terminate (last entry for the selected channel/endpoint)

Bits 23:16 **PTXQSAV[7:0]:** Periodic transmit request queue space available

Indicates the number of free locations available to be written in the periodic transmit request queue. This queue holds both IN and OUT requests.

00: Periodic transmit request queue is full

01: 1 location available

10: 2 locations available

bxn: n locations available ($0 \le n \le 8$)

Others: Reserved

Bits 15:0 **PTXFSAVL[15:0]:** Periodic transmit data FIFO space available

Indicates the number of free locations available to be written to in the periodic Tx FIFO.

Values are in terms of 32-bit words

0000: Periodic Tx FIFO is full

0001: 1 word available

0010: 2 words available

bxn: n words available (where $0 \le n \le$ PTXFD)

Others: Reserved

47.15.27 OTG host all channels interrupt register (OTG_HAINT)

Address offset: 0x414

Reset value: 0x0000 0000

When a significant event occurs on a channel, the host all channels interrupt register interrupts the application using the host channels interrupt bit of the core interrupt register (HCINT bit in OTG_GINTSTS). This is shown in *Figure 538*. There is one interrupt bit per channel, up to a maximum of 16 bits. Bits in this register are set and cleared when the application sets and clears bits in the corresponding host channel-x interrupt register.

31	30	29	28	27	26	25	24	23	22	21	20	19	18	17	16
Res.	Res.	Res.	Res.	Res.	Res.	Res.	Res.	Res.	Res.	Res.	Res.	Res.	Res.	Res.	Res.

15	14	13	12	11	10	9	8	7	6	5	4	3	2	1	0
HAINT[15:0]															
r	r	r	r	r	r	r	r	r	r	r	r	r	r	r	r

Bits 31:16 Reserved, must be kept at reset value.

Bits 15:0 **HAINT[15:0]:** Channel interrupts
One bit per channel: Bit 0 for Channel 0, bit 15 for Channel 15

47.15.28 OTG host all channels interrupt mask register (OTG_HAINTMSK)

Address offset: 0x418

Reset value: 0x0000 0000

The host all channel interrupt mask register works with the host all channel interrupt register to interrupt the application when an event occurs on a channel. There is one interrupt mask bit per channel, up to a maximum of 16 bits.

31	30	29	28	27	26	25	24	23	22	21	20	19	18	17	16
Res.	Res.	Res.	Res.	Res.	Res.	Res.	Res.	Res.	Res.	Res.	Res.	Res.	Res.	Res.	Res.

15	14	13	12	11	10	9	8	7	6	5	4	3	2	1	0
HAINTM[15:0]															
rw	rw	rw	rw	rw	rw	rw	rw	rw	rw	rw	rw	rw	rw	rw	rw

Bits 31:16 Reserved, must be kept at reset value.

Bits 15:0 **HAINTM[15:0]:** Channel interrupt mask
0: Masked interrupt
1: Unmasked interrupt
One bit per channel: Bit 0 for channel 0, bit 15 for channel 15

47.15.29 OTG host port control and status register (OTG_HPRT)

Address offset: 0x440

Reset value: 0x0000 0000

This register is available only in host mode. Currently, the OTG host supports only one port.

A single register holds USB port-related information such as USB reset, enable, suspend, resume, connect status, and test mode for each port. It is shown in *Figure 538*. The rc_w1 bits in this register can trigger an interrupt to the application through the host port interrupt bit of the core interrupt register (HPRTINT bit in OTG_GINTSTS). On a port interrupt, the application must read this register and clear the bit that caused the interrupt. For the rc_w1 bits, the application must write a 1 to the bit to clear the interrupt.

31	30	29	28	27	26	25	24	23	22	21	20	19	18	17	16
Res.	Res.	Res.	Res.	Res.	Res.	Res.	Res.	Res.	Res.	Res.	Res.	Res.	PSPD[1:0]		PTCTL [3]
													r	r	rw

15	14	13	12	11	10	9	8	7	6	5	4	3	2	1	0
PTCTL[2:0]			PPWR	PLSTS[1:0]		Res.	PRST	PSUSP	PRES	POC CHNG	POCA	PEN CHNG	PENA	PCDET	PCSTS
rw	rw	rw	rw	r	r		rw	rs	rw	rc_w1	r	rc_w1	rc_w1	rc_w1	r

Bits 31:19 Reserved, must be kept at reset value.

Bits 18:17 **PSPD[1:0]:** Port speed

Indicates the speed of the device attached to this port.
01: Full speed
10: Low speed
11: Reserved

Bits 16:13 **PTCTL[3:0]:** Port test control

The application writes a nonzero value to this field to put the port into a Test mode, and the corresponding pattern is signaled on the port.
0000: Test mode disabled
0001: Test_J mode
0010: Test_K mode
0011: Test_SE0_NAK mode
0100: Test_Packet mode
0101: Test_Force_Enable
Others: Reserved

Bit 12 **PPWR:** Port power

The application uses this field to control power to this port, and the core clears this bit on an overcurrent condition.
0: Power off
1: Power on

Bits 11:10 **PLSTS[1:0]:** Port line status

Indicates the current logic level USB data lines
Bit 10: Logic level of OTG_DP
Bit 11: Logic level of OTG_DM

Bit 9 Reserved, must be kept at reset value.

Bit 8 **PRST:** Port reset

When the application sets this bit, a reset sequence is started on this port. The application must time the reset period and clear this bit after the reset sequence is complete.

0: Port not in reset

1: Port in reset

The application must leave this bit set for a minimum duration of at least 10 ms to start a reset on the port. The application can leave it set for another 10 ms in addition to the required minimum duration, before clearing the bit, even though there is no maximum limit set by the USB standard.

High speed: 50 ms

Full speed/Low speed: 10 ms

Bit 7 **PSUSP:** Port suspend

The application sets this bit to put this port in suspend mode. The core only stops sending SOFs when this is set. To stop the PHY clock, the application must set the port clock stop bit, which asserts the suspend input pin of the PHY.

The read value of this bit reflects the current suspend status of the port. This bit is cleared by the core after a remote wakeup signal is detected or the application sets the port reset bit or port resume bit in this register or the resume/remote wakeup detected interrupt bit or disconnect detected interrupt bit in the core interrupt register (WKUPINT or DISCINT in OTG_GINTSTS, respectively).

0: Port not in suspend mode

1: Port in suspend mode

Bit 6 **PRES:** Port resume

The application sets this bit to drive resume signaling on the port. The core continues to drive the resume signal until the application clears this bit.

If the core detects a USB remote wakeup sequence, as indicated by the port resume/remote wakeup detected interrupt bit of the core interrupt register (WKUPINT bit in OTG_GINTSTS), the core starts driving resume signaling without application intervention and clears this bit when it detects a disconnect condition. The read value of this bit indicates whether the core is currently driving resume signaling.

0: No resume driven

1: Resume driven

When LPM is enabled and the core is in L1 state, the behavior of this bit is as follow:

1. The application sets this bit to drive resume signaling on the port.

2. The core continues to drive the resume signal until a predetermined time specified in BESLTHRS[3:0] field of OTG_GLPMCFG register.

3. If the core detects a USB remote wakeup sequence, as indicated by the port L1Resume/Remote L1Wakeup detected interrupt bit of the core interrupt register (WKUPINT in OTG_GINTSTS), the core starts driving resume signaling without application intervention and clears this bit at the end of resume.This bit can be set or cleared by both the core and the application. This bit is cleared by the core even if there is no device connected to the host.

Bit 5 **POCCHNG:** Port overcurrent change

The core sets this bit when the status of the port overcurrent active bit (bit 4) in this register changes.

Bit 4 **POCA:** Port overcurrent active

Indicates the overcurrent condition of the port.

0: No overcurrent condition

1: Overcurrent condition

Bit 3 **PENCHNG:** Port enable/disable change

The core sets this bit when the status of the port enable bit 2 in this register changes.

Bit 2 **PENA:** Port enable

A port is enabled only by the core after a reset sequence, and is disabled by an overcurrent condition, a disconnect condition, or by the application clearing this bit. The application cannot set this bit by a register write. It can only clear it to disable the port. This bit does not trigger any interrupt to the application.

0: Port disabled

1: Port enabled

Bit 1 **PCDET:** Port connect detected

The core sets this bit when a device connection is detected to trigger an interrupt to the application using the host port interrupt bit in the core interrupt register (HPRTINT bit in OTG_GINTSTS). The application must write a 1 to this bit to clear the interrupt.

Bit 0 **PCSTS:** Port connect status

0: No device is attached to the port

1: A device is attached to the port

47.15.30 OTG host channel x characteristics register (OTG_HCCHARx)

Address offset: 0x500 + 0x20 * x, (x = 0 to 11)

Reset value: 0x0000 0000

31	30	29	28	27	26	25	24	23	22	21	20	19	18	17	16
CHENA	CHDIS	ODD FRM	DAD[6:0]							MCNT[1:0]		EPTYP[1:0]		LSDEV	Res.
rs	rs	rw	rw	rw	rw	rw	rw	rw	rw	rw	rw	rw	rw	rw	

15	14	13	12	11	10	9	8	7	6	5	4	3	2	1	0
EPDIR	EPNUM[3:0]				MPSIZ[10:0]										
rw	rw	rw	rw	rw	rw	rw	rw	rw	rw	rw	rw	rw	rw	rw	rw

Bit 31 **CHENA:** Channel enable

This field is set by the application and cleared by the OTG host.

0: Channel disabled

1: Channel enabled

Bit 30 **CHDIS:** Channel disable

The application sets this bit to stop transmitting/receiving data on a channel, even before the transfer for that channel is complete. The application must wait for the Channel disabled interrupt before treating the channel as disabled.

Bit 29 **ODDFRM:** Odd frame

This field is set (reset) by the application to indicate that the OTG host must perform a transfer in an odd frame. This field is applicable for only periodic (isochronous and interrupt) transactions.

0: Even frame

1: Odd frame

Bits 28:22 **DAD[6:0]:** Device address

This field selects the specific device serving as the data source or sink.

Bits 21:20 **MCNT[1:0]:** Multicount

This field indicates to the host the number of transactions that must be executed per frame for this periodic endpoint. For non-periodic transfers, this field is not used

00: Reserved. This field yields undefined results

01: 1 transaction

10: 2 transactions per frame to be issued for this endpoint

11: 3 transactions per frame to be issued for this endpoint

Note: This field must be set to at least 01.

Bits 19:18 **EPTYP[1:0]:** Endpoint type

Indicates the transfer type selected.

00: Control

01: Isochronous

10: Bulk

11: Interrupt

Bit 17 **LSDEV:** Low-speed device

This field is set by the application to indicate that this channel is communicating to a low-speed device.

Bit 16 Reserved, must be kept at reset value.

Bit 15 **EPDIR:** Endpoint direction

Indicates whether the transaction is IN or OUT.

0: OUT

1: IN

Bits 14:11 **EPNUM[3:0]:** Endpoint number

Indicates the endpoint number on the device serving as the data source or sink.

Bits 10:0 **MPSIZ[10:0]:** Maximum packet size

Indicates the maximum packet size of the associated endpoint.

47.15.31 OTG host channel x interrupt register (OTG_HCINTx)

Address offset: 0x508 + 0x20 * x, (x = 0 to 11)

Reset value: 0x0000 0000

This register indicates the status of a channel with respect to USB- and AHB-related events. It is shown in *Figure 538*. The application must read this register when the host channels interrupt bit in the core interrupt register (HCINT bit in OTG_GINTSTS) is set. Before the application can read this register, it must first read the host all channels interrupt (OTG_HAINT) register to get the exact channel number for the host channel-x interrupt register. The application must clear the appropriate bit in this register to clear the corresponding bits in the OTG_HAINT and OTG_GINTSTS registers.

31	30	29	28	27	26	25	24	23	22	21	20	19	18	17	16
Res.	Res.	Res.	Res.	Res.	Res.	Res.	Res.	Res.	Res.	Res.	Res.	Res.	Res.	Res.	Res.

15	14	13	12	11	10	9	8	7	6	5	4	3	2	1	0
Res.	Res.	Res.	Res.	Res.	DTERR	FRM OR	BBERR	TXERR	Res.	ACK	NAK	STALL	Res.	CHH	XFRC
					rc_w1	rc_w1	rc_w1	rc_w1		rc_w1	rc_w1	rc_w1		rc_w1	rc_w1

Bits 31:11 Reserved, must be kept at reset value.

Bit 10 **DTERR:** Data toggle error.

Bit 9 **FRMOR:** Frame overrun.

Bit 8 **BBERR:** Babble error.

Bit 7 **TXERR:** Transaction error.

Indicates one of the following errors occurred on the USB.
CRC check failure
Timeout
Bit stuff error
False EOP

Bit 6 Reserved, must be kept at reset value.

Bit 5 **ACK:** ACK response received/transmitted interrupt.

Bit 4 **NAK:** NAK response received interrupt.

Bit 3 **STALL:** STALL response received interrupt.

Bit 2 Reserved, must be kept at reset value.

Bit 1 **CHH:** Channel halted.

Indicates the transfer completed abnormally either because of any USB transaction error or in response to disable request by the application.

Bit 0 **XFRC:** Transfer completed.

Transfer completed normally without any errors.

47.15.32 OTG host channel x interrupt mask register (OTG_HCINTMSKx)

Address offset: 0x50C + 0x20 * x, (x = 0 to 11)

Reset value: 0x0000 0000

This register reflects the mask for each channel status described in the previous section.

31	30	29	28	27	26	25	24	23	22	21	20	19	18	17	16
Res.	Res.	Res.	Res.	Res.	Res.	Res.	Res.	Res.	Res.	Res.	Res.	Res.	Res.	Res.	Res.

15	14	13	12	11	10	9	8	7	6	5	4	3	2	1	0
Res.	Res.	Res.	Res.	Res.	DTERRM	FRMORM	BBERRM	TXERRM	Res.	ACKM	NAKM	STALLM	Res.	CHHM	XFRCM
					rw	rw	rw	rw		rw	rw	rw		rw	rw

Bits 31:11 Reserved, must be kept at reset value.

Bit 10 **DTERRM:** Data toggle error mask.

0: Masked interrupt
1: Unmasked interrupt

Bit 9 **FRMORM:** Frame overrun mask.

0: Masked interrupt
1: Unmasked interrupt

Bit 8 **BBERRM:** Babble error mask.
0: Masked interrupt
1: Unmasked interrupt

Bit 7 **TXERRM:** Transaction error mask.
0: Masked interrupt
1: Unmasked interrupt

Bit 6 Reserved, must be kept at reset value.

Bit 5 **ACKM:** ACK response received/transmitted interrupt mask.
0: Masked interrupt
1: Unmasked interrupt

Bit 4 **NAKM:** NAK response received interrupt mask.
0: Masked interrupt
1: Unmasked interrupt

Bit 3 **STALLM:** STALL response received interrupt mask.
0: Masked interrupt
1: Unmasked interrupt

Bit 2 Reserved, must be kept at reset value.

Bit 1 **CHHM:** Channel halted mask
0: Masked interrupt
1: Unmasked interrupt

Bit 0 **XFRCM:** Transfer completed mask
0: Masked interrupt
1: Unmasked interrupt

47.15.33 OTG host channel x transfer size register (OTG_HCTSIZx)

Address offset: 0x510 + 0x20 * x, (x = 0 to 11)

Reset value: 0x0000 0000

31	30	29	28	27	26	25	24	23	22	21	20	19	18	17	16
DO PNG	DPID[1:0]		PKTCNT[9:0]										XFRSIZ[18:16]		
rw	rw	rw	rw	rw	rw	rw	rw	rw	rw	rw	rw	rw	rw	rw	rw

15	14	13	12	11	10	9	8	7	6	5	4	3	2	1	0
XFRSIZ[15:0]															
rw	rw	rw	rw	rw	rw	rw	rw	rw	rw	rw	rw	rw	rw	rw	rw

Bit 31 **DOPNG:** Do Ping

This bit is used only for OUT transfers. Setting this field to 1 directs the host to do PING protocol.

Note: Do not set this bit for IN transfers. If this bit is set for IN transfers, it disables the channel.

Bits 30:29 **DPID[1:0]:** Data PID

The application programs this field with the type of PID to use for the initial transaction. The host maintains this field for the rest of the transfer.

00: DATA0

10: DATA1

11: SETUP (control) / reserved (non-control)

Bits 28:19 **PKTCNT[9:0]:** Packet count

This field is programmed by the application with the expected number of packets to be transmitted (OUT) or received (IN).

The host decrements this count on every successful transmission or reception of an OUT/IN packet. Once this count reaches zero, the application is interrupted to indicate normal completion.

Bits 18:0 **XFRSIZ[18:0]:** Transfer size

For an OUT, this field is the number of data bytes the host sends during the transfer.

For an IN, this field is the buffer size that the application has reserved for the transfer. The application is expected to program this field as an integer multiple of the maximum packet size for IN transactions (periodic and non-periodic).

47.15.34 Device-mode registers

These registers must be programmed every time the core changes to device mode

47.15.35 OTG device configuration register (OTG_DCFG)

Address offset: 0x800

Reset value: 0x0220 0000

This register configures the core in device mode after power-on or after certain control commands or enumeration. Do not make changes to this register after initial programming.

31	30	29	28	27	26	25	24	23	22	21	20	19	18	17	16
Res.	Res.	Res.	Res.	Res.	Res.	Res.	Res.	Res.	Res.	Res.	Res.	Res.	Res.	Res.	Res.

15	14	13	12	11	10	9	8	7	6	5	4	3	2	1	0
ERRATIM	Res.	Res.	PFIVL[1:0]		DAD[6:0]							Res.	NZLSOHSK	DSPD[1:0]	
rw			rw	rw	rw	rw	rw	rw	rw	rw	rw		rw	rw	rw

Bits 31:16 Reserved, must be kept at reset value.

Bit 15 **ERRATIM:** Erratic error interrupt mask

1: Mask early suspend interrupt on erratic error

0: Early suspend interrupt is generated on erratic error

Note: This bit is available in STM32L49x/L4Ax products, reserved otherwise.

Bit 14 Reserved, must be kept at reset value.

Bit 13 Reserved, must be kept at reset value.

Bits 12:11 **PFIVL[1:0]:** Periodic frame interval

Indicates the time within a frame at which the application must be notified using the end of periodic frame interrupt. This can be used to determine if all the isochronous traffic for that frame is complete.

00: 80% of the frame interval

01: 85% of the frame interval

10: 90% of the frame interval

11: 95% of the frame interval

Bits 10:4 **DAD[6:0]:** Device address

The application must program this field after every SetAddress control command.

Bit 3 Reserved, must be kept at reset value.

Bit 2 **NZLSOHSK:** Non-zero-length status OUT handshake

The application can use this field to select the handshake the core sends on receiving a nonzero-length data packet during the OUT transaction of a control transfer's status stage.

1:Send a STALL handshake on a nonzero-length status OUT transaction and do not send the received OUT packet to the application.

0:Send the received OUT packet to the application (zero-length or nonzero-length) and send a handshake based on the NAK and STALL bits for the endpoint in the device endpoint control register.

Bits 1:0 **DSPD[1:0]:** Device speed

Indicates the speed at which the application requires the core to enumerate, or the maximum speed the application can support. However, the actual bus speed is determined only after the chirp sequence is completed, and is based on the speed of the USB host to which the core is connected.

00: Reserved

01: Reserved

10: Reserved

11: Full speed (USB 1.1 transceiver clock is 48 MHz)

47.15.36 OTG device control register (OTG_DCTL)

Address offset: 0x804

Reset value: 0x0000 0002

31	30	29	28	27	26	25	24	23	22	21	20	19	18	17	16
Res.	Res.	Res.	Res.	Res.	Res.	Res.	Res.	Res.	Res.	Res.	Res.	Res.	DS BESL RJCT	Res.	Res.
													rw		

15	14	13	12	11	10	9	8	7	6	5	4	3	2	1	0
Res.	Res.	Res.	Res.	PO PRG DNE	CGO NAK	SGO NAK	CGI NAK	SGI NAK	TCTL[2:0]			GON STS	GIN STS	SDIS	RWU SIG
				rw	w	w	w	w	rw	rw	rw	r	r	rw	rw

Bits 31:19 Reserved, must be kept at reset value.

Bit 18 **DSBESLRJCT:** Deep sleep BESL reject

Core rejects LPM request with BESL value greater than BESL threshold programmed. NYET response is sent for LPM tokens with BESL value greater than BESL threshold. By default, the deep sleep BESL reject feature is disabled.

Bits 17:12 Reserved, must be kept at reset value.

Bit 11 **POPRGDNE:** Power-on programming done

The application uses this bit to indicate that register programming is completed after a wakeup from power down mode.

Bit 10 **CGONAK:** Clear global OUT NAK

Writing 1 to this field clears the Global OUT NAK.

Bit 9 **SGONAK:** Set global OUT NAK

Writing 1 to this field sets the Global OUT NAK.
The application uses this bit to send a NAK handshake on all OUT endpoints.
The application must set the this bit only after making sure that the Global OUT NAK effective bit in the core interrupt register (GONAKEFF bit in OTG_GINTSTS) is cleared.

Bit 8 **CGINAK:** Clear global IN NAK

Writing 1 to this field clears the Global IN NAK.

Bit 7 **SGINAK:** Set global IN NAK

Writing 1 to this field sets the Global non-periodic IN NAK.The application uses this bit to send a NAK handshake on all non-periodic IN endpoints.
The application must set this bit only after making sure that the Global IN NAK effective bit in the core interrupt register (GINAKEFF bit in OTG_GINTSTS) is cleared.

Bits 6:4 **TCTL[2:0]:** Test control

000: Test mode disabled
001: Test_J mode
010: Test_K mode
011: Test_SE0_NAK mode
100: Test_Packet mode
101: Test_Force_Enable
Others: Reserved

Bit 3 **GONSTS:** Global OUT NAK status

0:A handshake is sent based on the FIFO status and the NAK and STALL bit settings.

1:No data is written to the Rx FIFO, irrespective of space availability. Sends a NAK handshake on all packets, except on SETUP transactions. All isochronous OUT packets are dropped.

Bit 2 **GINSTS:** Global IN NAK status

0:A handshake is sent out based on the data availability in the transmit FIFO.

1:A NAK handshake is sent out on all non-periodic IN endpoints, irrespective of the data availability in the transmit FIFO.

Bit 1 **SDIS:** Soft disconnect

The application uses this bit to signal the USB OTG core to perform a soft disconnect. As long as this bit is set, the host does not see that the device is connected, and the device does not receive signals on the USB. The core stays in the disconnected state until the application clears this bit.

0:Normal operation. When this bit is cleared after a soft disconnect, the core generates a device connect event to the USB host. When the device is reconnected, the USB host restarts device enumeration.

1:The core generates a device disconnect event to the USB host.

Bit 0 **RWUSIG:** Remote wakeup signaling

When the application sets this bit, the core initiates remote signaling to wake up the USB host. The application must set this bit to instruct the core to exit the suspend state. As specified in the USB 2.0 specification, the application must clear this bit 1 ms to 15 ms after setting it.

If LPM is enabled and the core is in the L1 (sleep) state, when the application sets this bit, the core initiates L1 remote signaling to wake up the USB host. The application must set this bit to instruct the core to exit the sleep state. As specified in the LPM specification, the hardware automatically clears this bit 50 µs ($T_{L1DevDrvResume}$) after being set by the application. The application must not set this bit when bRemoteWake from the previous LPM transaction is zero (refer to REMWAKE bit in GLPMCFG register).

Table 327 contains the minimum duration (according to device state) for which the Soft disconnect (SDIS) bit must be set for the USB host to detect a device disconnect. To accommodate clock jitter, it is recommended that the application add some extra delay to the specified minimum duration.

Table 327. Minimum duration for soft disconnect

Operating speed	Device state	Minimum duration
Full speed	Suspended	1 ms + 2.5 µs
Full speed	Idle	2.5 µs
Full speed	Not Idle or suspended (Performing transactions)	2.5 µs

47.15.37 OTG device status register (OTG_DSTS)

Address offset: 0x808

Reset value: 0x0000 0010

This register indicates the status of the core with respect to USB-related events. It must be read on interrupts from the device all interrupts (OTG_DAINT) register.

31	30	29	28	27	26	25	24	23	22	21	20	19	18	17	16
Res.	Res.	Res.	Res.	Res.	Res.	Res.	Res.	DEVLNSTS[1:0]		FNSOF[13:8]					
								r	r	r	r	r	r	r	r

15	14	13	12	11	10	9	8	7	6	5	4	3	2	1	0
FNSOF[7:0]								Res.	Res.	Res.	Res.	EERR	ENUMSPD[1:0]		SUSP STS
r	r	r	r	r	r	r	r					r	r	r	r

Bits 31:24 Reserved, must be kept at reset value.

Bits 23:22 **DEVLNSTS[1:0]:** Device line status

Indicates the current logic level USB data lines.
Bit [23]: Logic level of D+
Bit [22]: Logic level of D-

Bits 21:8 **FNSOF[13:0]:** Frame number of the received SOF

Bits 7:4 Reserved, must be kept at reset value.

Bit 3 **EERR:** Erratic error

The core sets this bit to report any erratic errors.
Due to erratic errors, the OTG_FS controller goes into suspended state and an interrupt is generated to the application with Early suspend bit of the OTG_GINTSTS register (ESUSP bit in OTG_GINTSTS). If the early suspend is asserted due to an erratic error, the application can only perform a soft disconnect recover.

Bits 2:1 **ENUMSPD[1:0]:** Enumerated speed

Indicates the speed at which the OTG_FS controller has come up after speed detection through a chirp sequence.
11: Full speed using embedded FS PHY
Others: reserved

Bit 0 **SUSPSTS:** Suspend status

In device mode, this bit is set as long as a suspend condition is detected on the USB. The core enters the suspended state when there is no activity on the USB data lines for a period of 3 ms. The core comes out of the suspend:

– When there is an activity on the USB data lines
– When the application writes to the remote wakeup signaling bit in the OTG_DCTL register (RWUSIG bit in OTG_DCTL).

47.15.38 OTG device IN endpoint common interrupt mask register (OTG_DIEPMSK)

Address offset: 0x810

Reset value: 0x0000 0000

This register works with each of the OTG_DIEPINTx registers for all endpoints to generate an interrupt per IN endpoint. The IN endpoint interrupt for a specific status in the OTG_DIEPINTx register can be masked by writing to the corresponding bit in this register. Status bits are masked by default.

31	30	29	28	27	26	25	24	23	22	21	20	19	18	17	16
Res.	Res.	Res.	Res.	Res.	Res.	Res.	Res.	Res.	Res.	Res.	Res.	Res.	Res.	Res.	Res.

15	14	13	12	11	10	9	8	7	6	5	4	3	2	1	0
Res.	Res.	NAKM	Res.	Res.	Res.	Res.	Res.	Res.	INEPNEM	INEPNMM	ITTXFEMSK	TOM	Res.	EPDM	XFRCM
		rw							rw	rw	rw	rw		rw	rw

Bits 31:14 Reserved, must be kept at reset value.

Bit 13 **NAKM:** NAK interrupt mask
0: Masked interrupt
1: Unmasked interrupt

Bits 12:10 Reserved, must be kept at reset value.

Bit 9 Reserved, must be kept at reset value.

Bit 8 Reserved, must be kept at reset value.

Bit 7 Reserved, must be kept at reset value.

Bit 6 **INEPNEM:** IN endpoint NAK effective mask
0: Masked interrupt
1: Unmasked interrupt

Bit 5 **INEPNMM:** IN token received with EP mismatch mask
0: Masked interrupt
1: Unmasked interrupt

Bit 4 **ITTXFEMSK:** IN token received when Tx FIFO empty mask
0: Masked interrupt
1: Unmasked interrupt

Bit 3 **TOM:** Timeout condition mask (Non-isochronous endpoints)
0: Masked interrupt
1: Unmasked interrupt

Bit 2 Reserved, must be kept at reset value.

Bit 1 **EPDM:** Endpoint disabled interrupt mask
0: Masked interrupt
1: Unmasked interrupt

Bit 0 **XFRCM:** Transfer completed interrupt mask
0: Masked interrupt
1: Unmasked interrupt

47.15.39 OTG device OUT endpoint common interrupt mask register (OTG_DOEPMSK)

Address offset: 0x814

Reset value: 0x0000 0000

This register works with each of the OTG_DOEPINTx registers for all endpoints to generate an interrupt per OUT endpoint. The OUT endpoint interrupt for a specific status in the OTG_DOEPINTx register can be masked by writing into the corresponding bit in this register. Status bits are masked by default.

31	30	29	28	27	26	25	24	23	22	21	20	19	18	17	16
Res.	Res.	Res.	Res.	Res.	Res.	Res.	Res.	Res.	Res.	Res.	Res.	Res.	Res.	Res.	Res.

15	14	13	12	11	10	9	8	7	6	5	4	3	2	1	0
Res.	Res.	NAK MSK	BERR M	Res.	Res.	Res.	OUT PKT ERRM	Res.	Res.	STS PHSR XM	OTEPD M	STUPM	Res.	EPDM	XFRC M
		rw	rw				rw			rw	rw	rw		rw	rw

Bits 31:14 Reserved, must be kept at reset value.

Bit 13 **NAKMSK:** NAK interrupt mask
0: Masked interrupt
1: Unmasked interrupt

Bit 12 **BERRM**: Babble error interrupt mask
0: Masked interrupt
1: Unmasked interrupt

Bits 11:10 Reserved, must be kept at reset value.

Bit 9 Reserved, must be kept at reset value.

Bit 8 **OUTPKTERRM:** Out packet error mask
0: Masked interrupt
1: Unmasked interrupt

Bit 7 Reserved, must be kept at reset value.

Bit 6 Reserved, must be kept at reset value.

Bit 5 **STSPHSRXM**: Status phase received for control write mask
0: Masked interrupt
1: Unmasked interrupt

Bit 4 **OTEPDM:** OUT token received when endpoint disabled mask. Applies to control OUT endpoints only.
0: Masked interrupt
1: Unmasked interrupt

Bit 3 **STUPM:** STUPM: SETUP phase done mask. Applies to control endpoints only.
0: Masked interrupt
1: Unmasked interrupt

Bit 2 Reserved, must be kept at reset value.

Bit 1 **EPDM:** Endpoint disabled interrupt mask
0: Masked interrupt
1: Unmasked interrupt

Bit 0 **XFRCM:** Transfer completed interrupt mask
0: Masked interrupt
1: Unmasked interrupt

47.15.40 OTG device all endpoints interrupt register (OTG_DAINT)

Address offset: 0x818

Reset value: 0x0000 0000

When a significant event occurs on an endpoint, a OTG_DAINT register interrupts the application using the device OUT endpoints interrupt bit or device IN endpoints interrupt bit of the OTG_GINTSTS register (OEPINT or IEPINT in OTG_GINTSTS, respectively). There is one interrupt bit per endpoint, up to a maximum of 16 bits for OUT endpoints and 16 bits for IN endpoints. For a bidirectional endpoint, the corresponding IN and OUT interrupt bits are used. Bits in this register are set and cleared when the application sets and clears bits in the corresponding device endpoint-x interrupt register (OTG_DIEPINTx/OTG_DOEPINTx).

31	30	29	28	27	26	25	24	23	22	21	20	19	18	17	16
OEPINT[15:0]															
r	r	r	r	r	r	r	r	r	r	r	r	r	r	r	r
15	14	13	12	11	10	9	8	7	6	5	4	3	2	1	0
IEPINT[15:0]															
r	r	r	r	r	r	r	r	r	r	r	r	r	r	r	r

Bits 31:16 **OEPINT[15:0]:** OUT endpoint interrupt bits
One bit per OUT endpoint:
Bit 16 for OUT endpoint 0, bit 19 for OUT endpoint 3.

Bits 15:0 **IEPINT[15:0]:** IN endpoint interrupt bits
One bit per IN endpoint:
Bit 0 for IN endpoint 0, bit 3 for endpoint 3.

47.15.41 OTG all endpoints interrupt mask register (OTG_DAINTMSK)

Address offset: 0x81C

Reset value: 0x0000 0000

The OTG_DAINTMSK register works with the device endpoint interrupt register to interrupt the application when an event occurs on a device endpoint. However, the OTG_DAINT register bit corresponding to that interrupt is still set.

31	30	29	28	27	26	25	24	23	22	21	20	19	18	17	16
OEPM[15:0]															
rw	rw	rw	rw	rw	rw	rw	rw	rw	rw	rw	rw	rw	rw	rw	rw
15	14	13	12	11	10	9	8	7	6	5	4	3	2	1	0
IEPM[15:0]															
rw	rw	rw	rw	rw	rw	rw	rw	rw	rw	rw	rw	rw	rw	rw	rw

Bits 31:16 **OEPM[15:0]:** OUT EP interrupt mask bits
One per OUT endpoint:
Bit 16 for OUT EP 0, bit 19 for OUT EP 3
0: Masked interrupt
1: Unmasked interrupt

Bits 15:0 **IEPM[15:0]:** IN EP interrupt mask bits
One bit per IN endpoint:
Bit 0 for IN EP 0, bit 3 for IN EP 3
0: Masked interrupt
1: Unmasked interrupt

47.15.42 OTG device V_{BUS} discharge time register (OTG_DVBUSDIS)

Address offset: 0x0828

Reset value: 0x0000 17D7

This register specifies the V_{BUS} discharge time after V_{BUS} pulsing during SRP.

31	30	29	28	27	26	25	24	23	22	21	20	19	18	17	16
Res.	Res.	Res.	Res.	Res.	Res.	Res.	Res.	Res.	Res.	Res.	Res.	Res.	Res.	Res.	Res.
15	14	13	12	11	10	9	8	7	6	5	4	3	2	1	0
VBUSDT[15:0]															
rw	rw	rw	rw	rw	rw	rw	rw	rw	rw	rw	rw	rw	rw	rw	rw

Bits 31:16 Reserved, must be kept at reset value.

Bits 15:0 **VBUSDT[15:0]:** Device V_{BUS} discharge time
Specifies the V_{BUS} discharge time after V_{BUS} pulsing during SRP. This value equals:
V_{BUS} discharge time in PHY clocks / 1 024
Depending on your V_{BUS} load, this value may need adjusting.

47.15.43 OTG device V_{BUS} pulsing time register (OTG_DVBUSPULSE)

Address offset: 0x082C

Reset value: 0x0000 05B8

This register specifies the V_{BUS} pulsing time during SRP.

31	30	29	28	27	26	25	24	23	22	21	20	19	18	17	16
Res.	Res.	Res.	Res.	Res.	Res.	Res.	Res.	Res.	Res.	Res.	Res.	Res.	Res.	Res.	Res.

15	14	13	12	11	10	9	8	7	6	5	4	3	2	1	0
DVBUSP[15:0]															
rw	rw	rw	rw	rw	rw	rw	rw	rw	rw	rw	rw	rw	rw	rw	rw

Bits 31:16 Reserved, must be kept at reset value.

Bits 15:0 **DVBUSP[15:0]:** Device V_{BUS} pulsing time. This feature is only relevant to OTG1.3.
Specifies the V_{BUS} pulsing time during SRP. This value equals:
V_{BUS} pulsing time in PHY clocks / 1 024

47.15.44 OTG device IN endpoint FIFO empty interrupt mask register (OTG_DIEPEMPMSK)

Address offset: 0x834

Reset value: 0x0000 0000

This register is used to control the IN endpoint FIFO empty interrupt generation (TXFE_OTG_DIEPINTx).

31	30	29	28	27	26	25	24	23	22	21	20	19	18	17	16
Res.	Res.	Res.	Res.	Res.	Res.	Res.	Res.	Res.	Res.	Res.	Res.	Res.	Res.	Res.	Res.

15	14	13	12	11	10	9	8	7	6	5	4	3	2	1	0
INEPTXFEM[15:0]															
rw	rw	rw	rw	rw	rw	rw	rw	rw	rw	rw	rw	rw	rw	rw	rw

Bits 31:16 Reserved, must be kept at reset value.

Bits 15:0 **INEPTXFEM[15:0]:** IN EP Tx FIFO empty interrupt mask bits
These bits act as mask bits for OTG_DIEPINTx.
TXFE interrupt one bit per IN endpoint:
Bit 0 for IN endpoint 0, bit 3 for IN endpoint 3
0: Masked interrupt
1: Unmasked interrupt

47.15.45 OTG device control IN endpoint 0 control register (OTG_DIEPCTL0)

Address offset: 0x900

Reset value: 0x0000 0000

This section describes the OTG_DIEPCTL0 register for USB_OTG FS. Nonzero control endpoints use registers for endpoints 1–3.

31	30	29	28	27	26	25	24	23	22	21	20	19	18	17	16
EPENA	EPDIS	Res.	Res.	SNAK	CNAK	TXFNUM[3:0]				STALL	Res.	EPTYP		NAK STS	Res.
rs	rs			w	w	rw	rw	rw	rw	rs		r	r	r	

15	14	13	12	11	10	9	8	7	6	5	4	3	2	1	0
USBAEP	Res.	Res.	Res.	Res.	Res.	Res.	Res.	Res.	Res.	Res.	Res.	Res.	Res.	MPSIZ[1:0]	
r														rw	rw

Bit 31 **EPENA:** Endpoint enable
The application sets this bit to start transmitting data on the endpoint 0.
The core clears this bit before setting any of the following interrupts on this endpoint:
– Endpoint disabled
– Transfer completed

Bit 30 **EPDIS:** Endpoint disable
The application sets this bit to stop transmitting data on an endpoint, even before the transfer for that endpoint is complete. The application must wait for the endpoint disabled interrupt before treating the endpoint as disabled. The core clears this bit before setting the endpoint disabled interrupt. The application must set this bit only if endpoint enable is already set for this endpoint.

Bits 29:28 Reserved, must be kept at reset value.

Bit 27 **SNAK:** Set NAK
A write to this bit sets the NAK bit for the endpoint.
Using this bit, the application can control the transmission of NAK handshakes on an endpoint. The core can also set this bit for an endpoint after a SETUP packet is received on that endpoint.

Bit 26 **CNAK:** Clear NAK
A write to this bit clears the NAK bit for the endpoint.

Bits 25:22 **TXFNUM[3:0]:** Tx FIFO number
This value is set to the FIFO number that is assigned to IN endpoint 0.

Bit 21 **STALL:** STALL handshake

The application can only set this bit, and the core clears it when a SETUP token is received for this endpoint. If a NAK bit, a Global IN NAK or Global OUT NAK is set along with this bit, the STALL bit takes priority.

Bit 20 Reserved, must be kept at reset value.

Bits 19:18 **EPTYP:** Endpoint type

Hardcoded to ‘00’ for control.

Bit 17 **NAKSTS:** NAK status

Indicates the following:

0: The core is transmitting non-NAK handshakes based on the FIFO status

1: The core is transmitting NAK handshakes on this endpoint.

When this bit is set, either by the application or core, the core stops transmitting data, even if there are data available in the Tx FIFO. Irrespective of this bit’s setting, the core always responds to SETUP data packets with an ACK handshake.

Bit 16 Reserved, must be kept at reset value.

Bit 15 **USBAEP:** USB active endpoint

This bit is always set to 1, indicating that control endpoint 0 is always active in all configurations and interfaces.

Bits 14:2 Reserved, must be kept at reset value.

Bits 1:0 **MPSIZ[1:0]:** Maximum packet size

The application must program this field with the maximum packet size for the current logical endpoint.

00: 64 bytes

01: 32 bytes

10: 16 bytes

11: 8 bytes

47.15.46 OTG device IN endpoint x control register (OTG_DIEPCTLx)

Address offset: 0x900 + 0x20 * x, (x = 1 to 5)

Reset value: 0x0000 0000

The application uses this register to control the behavior of each logical endpoint other than endpoint 0.

31	30	29	28	27	26	25	24	23	22	21	20	19	18	17	16
EPENA	EPDIS	SODD FRM	SD0 PID/ SEVN FRM	SNAK	CNAK	TXFNUM[3:0]				STALL	Res.	EPTYP[1:0]		NAK STS	EO NUM/ DPID
rs	rs	w	w	w	w	rw	rw	rw	rw	rw		rw	rw	r	r

15	14	13	12	11	10	9	8	7	6	5	4	3	2	1	0
USBA EP	Res.	Res.	Res.	Res.	MPSIZ[10:0]										
rw					rw	rw	rw	rw	rw	rw	rw	rw	rw	rw	rw

Bit 31 **EPENA:** Endpoint enable

The application sets this bit to start transmitting data on an endpoint.
The core clears this bit before setting any of the following interrupts on this endpoint:
– SETUP phase done
– Endpoint disabled
– Transfer completed

Bit 30 **EPDIS:** Endpoint disable

The application sets this bit to stop transmitting/receiving data on an endpoint, even before the transfer for that endpoint is complete. The application must wait for the endpoint disabled interrupt before treating the endpoint as disabled. The core clears this bit before setting the endpoint disabled interrupt. The application must set this bit only if endpoint enable is already set for this endpoint.

Bit 29 **SODDFRM:** Set odd frame

Applies to isochronous IN and OUT endpoints only.
Writing to this field sets the Even/Odd frame (EONUM) field to odd frame.

Bit 28 **SD0PID:** Set DATA0 PID

Applies to interrupt/bulk IN endpoints only.
Writing to this field sets the endpoint data PID (DPID) field in this register to DATA0.

SEVNFRM: Set even frame

Applies to isochronous IN endpoints only.
Writing to this field sets the Even/Odd frame (EONUM) field to even frame.

Bit 27 **SNAK:** Set NAK

A write to this bit sets the NAK bit for the endpoint.
Using this bit, the application can control the transmission of NAK handshakes on an endpoint. The core can also set this bit for OUT endpoints on a transfer completed interrupt, or after a SETUP is received on the endpoint.

Bit 26 **CNAK:** Clear NAK

A write to this bit clears the NAK bit for the endpoint.

Bits 25:22 **TXFNUM[3:0]:** Tx FIFO number

These bits specify the FIFO number associated with this endpoint. Each active IN endpoint must be programmed to a separate FIFO number.
This field is valid only for IN endpoints.

Bit 21 **STALL:** STALL handshake

Applies to non-control, non-isochronous IN endpoints only (access type is rw).
The application sets this bit to stall all tokens from the USB host to this endpoint. If a NAK bit, Global IN NAK, or Global OUT NAK is set along with this bit, the STALL bit takes priority. Only the application can clear this bit, never the core.

Bit 20 Reserved, must be kept at reset value.

Bits 19:18 **EPTYP[1:0]:** Endpoint type

This is the transfer type supported by this logical endpoint.
00: Control
01: Isochronous
10: Bulk
11: Interrupt

Bit 17 **NAKSTS:** NAK status

It indicates the following:

0: The core is transmitting non-NAK handshakes based on the FIFO status.

1: The core is transmitting NAK handshakes on this endpoint.

When either the application or the core sets this bit:

For non-isochronous IN endpoints: The core stops transmitting any data on an IN endpoint, even if there are data available in the Tx FIFO.

For isochronous IN endpoints: The core sends out a zero-length data packet, even if there are data available in the Tx FIFO.

Irrespective of this bit's setting, the core always responds to SETUP data packets with an ACK handshake.

Bit 16 **EONUM:** Even/odd frame

Applies to isochronous IN endpoints only.

Indicates the frame number in which the core transmits/receives isochronous data for this endpoint. The application must program the even/odd frame number in which it intends to transmit/receive isochronous data for this endpoint using the SEVNFRM and SODDFRM fields in this register.

0: Even frame

1: Odd frame

DPID: Endpoint data PID

Applies to interrupt/bulk IN endpoints only.

Contains the PID of the packet to be received or transmitted on this endpoint. The application must program the PID of the first packet to be received or transmitted on this endpoint, after the endpoint is activated. The application uses the SD0PID register field to program either DATA0 or DATA1 PID.

0: DATA0

1: DATA1

Bit 15 **USBAEP:** USB active endpoint

Indicates whether this endpoint is active in the current configuration and interface. The core clears this bit for all endpoints (other than EP 0) after detecting a USB reset. After receiving the SetConfiguration and SetInterface commands, the application must program endpoint registers accordingly and set this bit.

Bits 14:11 Reserved, must be kept at reset value.

Bits 10:0 **MPSIZ[10:0]:** Maximum packet size

The application must program this field with the maximum packet size for the current logical endpoint. This value is in bytes.

47.15.47 OTG device IN endpoint x interrupt register (OTG_DIEPINTx)

Address offset: 0x908 + 0x20 * x, (x = 0 to 5)

Reset value: 0x0000 0080

This register indicates the status of an endpoint with respect to USB- and AHB-related events. It is shown in *Figure 538*. The application must read this register when the IN endpoints interrupt bit of the core interrupt register (IEPINT in OTG_GINTSTS) is set. Before the application can read this register, it must first read the device all endpoints interrupt (OTG_DAINT) register to get the exact endpoint number for the device endpoint-x interrupt register. The application must clear the appropriate bit in this register to clear the corresponding bits in the OTG_DAINT and OTG_GINTSTS registers.

31	30	29	28	27	26	25	24	23	22	21	20	19	18	17	16
Res.	Res.	Res.	Res.	Res.	Res.	Res.	Res.	Res.	Res.	Res.	Res.	Res.	Res.	Res.	Res.

15	14	13	12	11	10	9	8	7	6	5	4	3	2	1	0
Res.	Res.	NAK	Res.	PKTD RPSTS	Res.	Res.	Res.	TXFE	IN EPNE	IN EPNM	ITTXFE	TOC	Res.	EP DISD	XFRC
		rc_w1		rc_w1				r	rc_w1	rc_w1	rc_w1	rc_w1		rc_w1	rc_w1

Bits 31:14 Reserved, must be kept at reset value.

Bit 13 **NAK:** NAK input

The core generates this interrupt when a NAK is transmitted or received by the device. In case of isochronous IN endpoints the interrupt gets generated when a zero length packet is transmitted due to unavailability of data in the Tx FIFO.

Bit 12 Reserved, must be kept at reset value.

Bit 11 **PKTDRPSTS:** Packet dropped status

This bit indicates to the application that an ISOC OUT packet has been dropped. This bit does not have an associated mask bit and does not generate an interrupt.

Bit 10 Reserved, must be kept at reset value.

Bit 9 Reserved, must be kept at reset value.

Bit 8 Reserved, must be kept at reset value.

Bit 7 **TXFE:** Transmit FIFO empty

This interrupt is asserted when the Tx FIFO for this endpoint is either half or completely empty. The half or completely empty status is determined by the Tx FIFO Empty Level bit in the OTG_GAHBCFG register (TXFELVL bit in OTG_GAHBCFG).

Bit 6 **INEPNE:** IN endpoint NAK effective

This bit can be cleared when the application clears the IN endpoint NAK by writing to the CNAK bit in OTG_DIEPCTLx.

This interrupt indicates that the core has sampled the NAK bit set (either by the application or by the core). The interrupt indicates that the IN endpoint NAK bit set by the application has taken effect in the core.

This interrupt does not guarantee that a NAK handshake is sent on the USB. A STALL bit takes priority over a NAK bit.

Bit 5 **INEPNM**: IN token received with EP mismatch

Indicates that the data in the top of the non-periodic TxFIFO belongs to an endpoint other than the one for which the IN token was received. This interrupt is asserted on the endpoint for which the IN token was received.

Bit 4 **ITTXFE:** IN token received when Tx FIFO is empty

Indicates that an IN token was received when the associated Tx FIFO (periodic/non-periodic) was empty. This interrupt is asserted on the endpoint for which the IN token was received.

Bit 3 **TOC:** Timeout condition

Indicates that the core has detected a timeout condition on the USB for the last IN token on this endpoint.

Bit 2 Reserved, must be kept at reset value

Bit 1 **EPDISD:** Endpoint disabled interrupt

This bit indicates that the endpoint is disabled per the application's request.

Bit 0 **XFRC:** Transfer completed interrupt

This field indicates that the programmed transfer is complete on the AHB as well as on the USB, for this endpoint.

47.15.48 OTG device IN endpoint 0 transfer size register (OTG_DIEPTSIZ0)

Address offset: 0x910

Reset value: 0x0000 0000

The application must modify this register before enabling endpoint 0. Once endpoint 0 is enabled using the endpoint enable bit in the device control endpoint 0 control registers (EPENA in OTG_DIEPCTL0), the core modifies this register. The application can only read this register once the core has cleared the endpoint enable bit.

Nonzero endpoints use the registers for endpoints 1–3.

31	30	29	28	27	26	25	24	23	22	21	20	19	18	17	16
Res.	Res.	Res.	Res.	Res.	Res.	Res.	Res.	Res.	Res.	Res.	PKTCNT[1:0]		Res.	Res.	Res.
											rw	rw			

15	14	13	12	11	10	9	8	7	6	5	4	3	2	1	0
Res.	Res.	Res.	Res.	Res.	Res.	Res.	Res.	Res.	XFRSIZ[6:0]						
									rw	rw	rw	rw	rw	rw	rw

Bits 31:21 Reserved, must be kept at reset value.

Bits 20:19 **PKTCNT[1:0]:** Packet count

Indicates the total number of USB packets that constitute the transfer size amount of data for endpoint 0.

This field is decremented every time a packet (maximum size or short packet) is read from the Tx FIFO.

Bits 18:7 Reserved, must be kept at reset value.

Bits 6:0 **XFRSIZ[6:0]:** Transfer size

Indicates the transfer size in bytes for endpoint 0. The core interrupts the application only after it has exhausted the transfer size amount of data. The transfer size can be set to the maximum packet size of the endpoint, to be interrupted at the end of each packet.

The core decrements this field every time a packet from the external memory is written to the Tx FIFO.

47.15.49 OTG device IN endpoint transmit FIFO status register (OTG_DTXFSTSx)

Address offset: 0x918 + 0x20 * x, (x = 0 to 5)

Reset value: 0x0000 0200

This read-only register contains the free space information for the device IN endpoint Tx FIFO.

31	30	29	28	27	26	25	24	23	22	21	20	19	18	17	16
Res.	Res.	Res.	Res.	Res.	Res.	Res.	Res.	Res.	Res.	Res.	Res.	Res.	Res.	Res.	Res.

15	14	13	12	11	10	9	8	7	6	5	4	3	2	1	0
INEPTFSAV[15:0]															
r	r	r	r	r	r	r	r	r	r	r	r	r	r	r	r

Bits 31:16 Reserved, must be kept at reset value.

Bits 15:0 **INEPTFSAV[15:0]:** IN endpoint Tx FIFO space available

Indicates the amount of free space available in the endpoint Tx FIFO.

Values are in terms of 32-bit words:

0x0: Endpoint Tx FIFO is full

0x1: 1 word available

0x2: 2 words available

0xn: n words available

Others: Reserved

47.15.50 OTG device IN endpoint x transfer size register (OTG_DIEPTSIZx)

Address offset: 0x910 + 0x20 * x, (x = 1 to 5)

Reset value: 0x0000 0000

The application must modify this register before enabling the endpoint. Once the endpoint is enabled using the endpoint enable bit in the OTG_DIEPCTLx registers (EPENA bit in OTG_DIEPCTLx), the core modifies this register. The application can only read this register once the core has cleared the endpoint enable bit.

31	30	29	28	27	26	25	24	23	22	21	20	19	18	17	16
Res.	MCNT[1:0]		PKTCNT[9:0]										XFRSIZ[18:16]		
	rw	rw	rw	rw	rw	rw	rw	rw	rw	rw	rw	rw	rw	rw	rw

15	14	13	12	11	10	9	8	7	6	5	4	3	2	1	0
XFRSIZ[15:0]															
rw	rw	rw	rw	rw	rw	rw	rw	rw	rw	rw	rw	rw	rw	rw	rw

Bit 31 Reserved, must be kept at reset value.

Bits 30:29 **MCNT[1:0]:** Multi count

For periodic IN endpoints, this field indicates the number of packets that must be transmitted per frame on the USB. The core uses this field to calculate the data PID for isochronous IN endpoints.

01: 1 packet

10: 2 packets

11: 3 packets

Bits 28:19 **PKTCNT[9:0]:** Packet count

Indicates the total number of USB packets that constitute the transfer size amount of data for this endpoint.

This field is decremented every time a packet (maximum size or short packet) is read from the Tx FIFO.

Bits 18:0 **XFRSIZ[18:0]:** Transfer size

This field contains the transfer size in bytes for the current endpoint. The core only interrupts the application after it has exhausted the transfer size amount of data. The transfer size can be set to the maximum packet size of the endpoint, to be interrupted at the end of each packet.

The core decrements this field every time a packet from the external memory is written to the Tx FIFO.

47.15.51 OTG device control OUT endpoint 0 control register (OTG_DOEPCTL0)

Address offset: 0xB00

Reset value: 0x0000 8000

This section describes the OTG_DOEPCTL0 register. Nonzero control endpoints use registers for endpoints 1–3.

31	30	29	28	27	26	25	24	23	22	21	20	19	18	17	16
EPENA	EPDIS	Res.	Res.	SNAK	CNAK	Res.	Res.	Res.	Res.	STALL	SNPM	EPTYP[1:0]		NAK STS	Res.
w	r			w	w					rs	rw	r	r	r	

15	14	13	12	11	10	9	8	7	6	5	4	3	2	1	0
USBA EP	Res.	Res.	Res.	Res.	Res.	Res.	Res.	Res.	Res.	Res.	Res.	Res.	Res.	MPSIZ[1:0]	
r														r	r

Bit 31 **EPENA:** Endpoint enable

The application sets this bit to start transmitting data on endpoint 0.

The core clears this bit before setting any of the following interrupts on this endpoint:

– SETUP phase done

– Endpoint disabled

– Transfer completed

Bit 30 **EPDIS:** Endpoint disable

The application cannot disable control OUT endpoint 0.

Bits 29:28 Reserved, must be kept at reset value.

Bit 27 **SNAK:** Set NAK

A write to this bit sets the NAK bit for the endpoint.

Using this bit, the application can control the transmission of NAK handshakes on an endpoint. The core can also set this bit on a transfer completed interrupt, or after a SETUP is received on the endpoint.

Bit 26 **CNAK:** Clear NAK

A write to this bit clears the NAK bit for the endpoint.

Bits 25:22 Reserved, must be kept at reset value.

Bit 21 **STALL:** STALL handshake

The application can only set this bit, and the core clears it, when a SETUP token is received for this endpoint. If a NAK bit or Global OUT NAK is set along with this bit, the STALL bit takes priority. Irrespective of this bit's setting, the core always responds to SETUP data packets with an ACK handshake.

Bit 20 **SNPM:** Snoop mode

This bit configures the endpoint to Snoop mode. In Snoop mode, the core does not check the correctness of OUT packets before transferring them to application memory.

Bits 19:18 **EPTYP[1:0]:** Endpoint type

Hardcoded to 2'b00 for control.

Bit 17 **NAKSTS:** NAK status

Indicates the following:

0: The core is transmitting non-NAK handshakes based on the FIFO status.

1: The core is transmitting NAK handshakes on this endpoint.

When either the application or the core sets this bit, the core stops receiving data, even if there is space in the Rx FIFO to accommodate the incoming packet. Irrespective of this bit's setting, the core always responds to SETUP data packets with an ACK handshake.

Bit 16 Reserved, must be kept at reset value.

Bit 15 **USBAEP:** USB active endpoint

This bit is always set to 1, indicating that a control endpoint 0 is always active in all configurations and interfaces.

Bits 14:2 Reserved, must be kept at reset value.

Bits 1:0 **MPSIZ[1:0]:** Maximum packet size

The maximum packet size for control OUT endpoint 0 is the same as what is programmed in control IN endpoint 0.

00: 64 bytes

01: 32 bytes

10: 16 bytes

11: 8 bytes

47.15.52 OTG device OUT endpoint x interrupt register (OTG_DOEPINTx)

Address offset: 0xB08 + 0x20 * x, (x = 0 to 5)

Reset value: 0x0000 0080

This register indicates the status of an endpoint with respect to USB- and AHB-related events. It is shown in *Figure 538*. The application must read this register when the OUT endpoints interrupt bit of the OTG_GINTSTS register (OEPINT bit in OTG_GINTSTS) is set. Before the application can read this register, it must first read the OTG_DAINT register to get the exact endpoint number for the OTG_DOEPINTx register. The application must clear the appropriate bit in this register to clear the corresponding bits in the OTG_DAINT and OTG_GINTSTS registers.

31	30	29	28	27	26	25	24	23	22	21	20	19	18	17	16
Res.	Res.	Res.	Res.	Res.	Res.	Res.	Res.	Res.	Res.	Res.	Res.	Res.	Res.	Res.	Res.

15	14	13	12	11	10	9	8	7	6	5	4	3	2	1	0
Res.	Res.	NAK	BERR	Res.	Res.	Res.	Res.	Res.	Res.	STSPH SRX	OTEP DIS	STUP	Res.	EP DISD	XFRC
		rc_w1	rc_w1							rc_w1	rc_w1	rc_w1		rc_w1	rc_w1

Bits 31:14 Reserved, must be kept at reset value.

Bit 13 **NAK:** NAK input

The core generates this interrupt when a NAK is transmitted or received by the device. In case of isochronous IN endpoints the interrupt gets generated when a zero length packet is transmitted due to unavailability of data in the Tx FIFO.

Bit 12 **BERR:** Babble error interrupt

The core generates this interrupt when babble is received for the endpoint.

Bits 11:10 Reserved, must be kept at reset value.

Bit 9 Reserved, must be kept at reset value.

Bit 8 Reserved, must be kept at reset value.

Bit 7 Reserved, must be kept at reset value.

Bit 6 Reserved, must be kept at reset value.

Bit 5 **STSPHSRX**: Status phase received for control write

This interrupt is valid only for control OUT endpoints. This interrupt is generated only after OTG_FS has transferred all the data that the host has sent during the data phase of a control write transfer, to the system memory buffer. The interrupt indicates to the application that the host has switched from data phase to the status phase of a control write transfer. The application can use this interrupt to ACK or STALL the status phase, after it has decoded the data phase.

Bit 4 **OTEPDIS:** OUT token received when endpoint disabled

Applies only to control OUT endpoints.

Indicates that an OUT token was received when the endpoint was not yet enabled. This interrupt is asserted on the endpoint for which the OUT token was received.

Bit 3 **STUP:** SETUP phase done

Applies to control OUT endpoint only.Indicates that the SETUP phase for the control endpoint is complete and no more back-to-back SETUP packets were received for the current control transfer. On this interrupt, the application can decode the received SETUP data packet.

Bit 2 Reserved, must be kept at reset value.

Bit 1 **EPDISD:** Endpoint disabled interrupt

This bit indicates that the endpoint is disabled per the application's request.

Bit 0 **XFRC:** Transfer completed interrupt

This field indicates that the programmed transfer is complete on the AHB as well as on the USB, for this endpoint.

47.15.53 OTG device OUT endpoint 0 transfer size register (OTG_DOEPTSIZ0)

Address offset: 0xB10

Reset value: 0x0000 0000

The application must modify this register before enabling endpoint 0. Once endpoint 0 is enabled using the endpoint enable bit in the OTG_DOEPCTL0 registers (EPENA bit in OTG_DOEPCTL0), the core modifies this register. The application can only read this register once the core has cleared the endpoint enable bit.

Nonzero endpoints use the registers for endpoints 1–5.

31	30	29	28	27	26	25	24	23	22	21	20	19	18	17	16
Res.	STUPCNT[1:0]		Res.	Res.	Res.	Res.	Res.	Res.	Res.	Res.	Res.	PKTCNT	Res.	Res.	Res.
	rw	rw										rw			

15	14	13	12	11	10	9	8	7	6	5	4	3	2	1	0
Res.	Res.	Res.	Res.	Res.	Res.	Res.	Res.	Res.	XFRSIZ[6:0]						
									rw	rw	rw	rw	rw	rw	rw

Bit 31 Reserved, must be kept at reset value.

Bits 30:29 **STUPCNT[1:0]:** SETUP packet count

This field specifies the number of back-to-back SETUP data packets the endpoint can receive.
01: 1 packet
10: 2 packets
11: 3 packets

Bits 28:20 Reserved, must be kept at reset value.

Bit 19 **PKTCNT:** Packet count

This field is decremented to zero after a packet is written into the Rx FIFO.

Bits 18:7 Reserved, must be kept at reset value.

Bits 6:0 **XFRSIZ[6:0]:** Transfer size

Indicates the transfer size in bytes for endpoint 0. The core interrupts the application only after it has exhausted the transfer size amount of data. The transfer size can be set to the maximum packet size of the endpoint, to be interrupted at the end of each packet.
The core decrements this field every time a packet is read from the Rx FIFO and written to the external memory.

47.15.54 OTG device OUT endpoint x control register (OTG_DOEPCTLx)

Address offset: 0xB00 + 0x20 * x, (x = 1 to 5)

Reset value: 0x0000 0000

The application uses this register to control the behavior of each logical endpoint other than endpoint 0.

31	30	29	28	27	26	25	24	23	22	21	20	19	18	17	16
EPENA	EPDIS	SD1 PID/ SODD FRM	SD0 PID/ SEVN FRM	SNAK	CNAK	Res.	Res.	Res.	Res.	STALL	SNPM	EPTYP[1:0]		NAK STS	EO NUM/ DPID
rs	rs	w	w	w	w					rw/rs	rw	rw	rw	r	r

15	14	13	12	11	10	9	8	7	6	5	4	3	2	1	0
USBA EP	Res.	Res.	Res.	Res.	MPSIZ[10:0]										
rw					rw	rw	rw	rw	rw	rw	rw	rw	rw	rw	rw

Bit 31 **EPENA:** Endpoint enable

Applies to IN and OUT endpoints.

The application sets this bit to start transmitting data on an endpoint.

The core clears this bit before setting any of the following interrupts on this endpoint:

– SETUP phase done

– Endpoint disabled

– Transfer completed

Bit 30 **EPDIS:** Endpoint disable

The application sets this bit to stop transmitting/receiving data on an endpoint, even before the transfer for that endpoint is complete. The application must wait for the endpoint disabled interrupt before treating the endpoint as disabled. The core clears this bit before setting the endpoint disabled interrupt. The application must set this bit only if endpoint enable is already set for this endpoint.

Bit 29 **SD1PID:** Set DATA1 PID

Applies to interrupt/bulk IN and OUT endpoints only. Writing to this field sets the endpoint data PID (DPID) field in this register to DATA1.

SODDFRM: Set odd frame

Applies to isochronous IN and OUT endpoints only. Writing to this field sets the Even/Odd frame (EONUM) field to odd frame.

Bit 28 **SD0PID:** Set DATA0 PID

Applies to interrupt/bulk OUT endpoints only.

Writing to this field sets the endpoint data PID (DPID) field in this register to DATA0.

SEVNFRM: Set even frame

Applies to isochronous OUT endpoints only.

Writing to this field sets the Even/Odd frame (EONUM) field to even frame.

Bit 27 **SNAK:** Set NAK

A write to this bit sets the NAK bit for the endpoint.

Using this bit, the application can control the transmission of NAK handshakes on an endpoint. The core can also set this bit for OUT endpoints on a transfer completed interrupt, or after a SETUP is received on the endpoint.

Bit 26 **CNAK:** Clear NAK

A write to this bit clears the NAK bit for the endpoint.

Bits 25:22 Reserved, must be kept at reset value.

Bit 21 **STALL:** STALL handshake

Applies to non-control, non-isochronous OUT endpoints only (access type is rw).

The application sets this bit to stall all tokens from the USB host to this endpoint. If a NAK bit, Global IN NAK, or Global OUT NAK is set along with this bit, the STALL bit takes priority. Only the application can clear this bit, never the core.

Applies to control endpoints only (access type is rs).

The application can only set this bit, and the core clears it, when a SETUP token is received for this endpoint. If a NAK bit, Global IN NAK, or Global OUT NAK is set along with this bit, the STALL bit takes priority. Irrespective of this bit's setting, the core always responds to SETUP data packets with an ACK handshake.

Bit 20 **SNPM:** Snoop mode

This bit configures the endpoint to Snoop mode. In Snoop mode, the core does not check the correctness of OUT packets before transferring them to application memory.

Bits 19:18 **EPTYP[1:0]:** Endpoint type

This is the transfer type supported by this logical endpoint.

00: Control

01: Isochronous

10: Bulk

11: Interrupt

Bit 17 **NAKSTS:** NAK status

Indicates the following:

0: The core is transmitting non-NAK handshakes based on the FIFO status.

1: The core is transmitting NAK handshakes on this endpoint.

When either the application or the core sets this bit:

The core stops receiving any data on an OUT endpoint, even if there is space in the Rx FIFO to accommodate the incoming packet.

Irrespective of this bit's setting, the core always responds to SETUP data packets with an ACK handshake.

Bit 16 **EONUM:** Even/odd frame

Applies to isochronous IN and OUT endpoints only.

Indicates the frame number in which the core transmits/receives isochronous data for this endpoint. The application must program the even/odd frame number in which it intends to transmit/receive isochronous data for this endpoint using the SEVNFRM and SODDFRM fields in this register.

0: Even frame

1: Odd frame

DPID: Endpoint data PID

Applies to interrupt/bulk OUT endpoints only.

Contains the PID of the packet to be received or transmitted on this endpoint. The application must program the PID of the first packet to be received or transmitted on this endpoint, after the endpoint is activated. The application uses the SD0PID register field to program either DATA0 or DATA1 PID.

0: DATA0

1: DATA1

Bit 15 **USBAEP:** USB active endpoint

Indicates whether this endpoint is active in the current configuration and interface. The core clears this bit for all endpoints (other than EP 0) after detecting a USB reset. After receiving the SetConfiguration and SetInterface commands, the application must program endpoint registers accordingly and set this bit.

Bits 14:11 Reserved, must be kept at reset value.

Bits 10:0 **MPSIZ[10:0]:** Maximum packet size

The application must program this field with the maximum packet size for the current logical endpoint. This value is in bytes.

47.15.55 OTG device OUT endpoint x transfer size register (OTG_DOEPTSIZx)

Address offset: 0xB10 + 0x20 * x, (x = 1 to 5)

Reset value: 0x0000 0000

The application must modify this register before enabling the endpoint. Once the endpoint is enabled using endpoint enable bit of the OTG_DOEPCTLx registers (EPENA bit in OTG_DOEPCTLx), the core modifies this register. The application can only read this register once the core has cleared the endpoint enable bit.

31	30	29	28	27	26	25	24	23	22	21	20	19	18	17	16
Res.	RXDPID/ STUPCNT[1:0]		PKTCNT[9:0]										XFRSIZ[18:16]		
	r/rw	r/rw	rw	rw	rw	rw	rw	rw	rw	rw	rw	rw	rw	rw	rw

15	14	13	12	11	10	9	8	7	6	5	4	3	2	1	0
XFRSIZ[15:0]															
rw	rw	rw	rw	rw	rw	rw	rw	rw	rw	rw	rw	rw	rw	rw	rw

Bit 31 Reserved, must be kept at reset value.

Bits 30:29 **RXDPID[1:0]:** Received data PID

Applies to isochronous OUT endpoints only.
This is the data PID received in the last packet for this endpoint.
00: DATA0
10: DATA1

STUPCNT[1:0]: SETUP packet count

Applies to control OUT endpoints only.
This field specifies the number of back-to-back SETUP data packets the endpoint can receive.
01: 1 packet
10: 2 packets
11: 3 packets

Bits 28:19 **PKTCNT[9:0]:** Packet count

Indicates the total number of USB packets that constitute the transfer size amount of data for this endpoint.
This field is decremented every time a packet (maximum size or short packet) is written to the Rx FIFO.

Bits 18:0 **XFRSIZ[18:0]:** Transfer size

This field contains the transfer size in bytes for the current endpoint. The core only interrupts the application after it has exhausted the transfer size amount of data. The transfer size can be set to the maximum packet size of the endpoint, to be interrupted at the end of each packet.
The core decrements this field every time a packet is read from the Rx FIFO and written to the external memory.

47.15.56 OTG power and clock gating control register (OTG_PCGCCTL)

Address offset: 0xE00

Reset value: 0x200B 8000

This register is available in host and device modes.

31	30	29	28	27	26	25	24	23	22	21	20	19	18	17	16
Res.	Res.	Res.	Res.	Res.	Res.	Res.	Res.	Res.	Res.	Res.	Res.	Res.	Res.	Res.	Res.

15	14	13	12	11	10	9	8	7	6	5	4	3	2	1	0
Res.	Res.	Res.	Res.	Res.	Res.	Res.	Res.	SUSP	PHY SLEEP	ENL1 GTG	PHY SUSP	Res.	Res.	GATE HCLK	STPP CLK
								r	r	rw	r			rw	rw

Bits 31:8 Reserved, must be kept at reset value.

Bit 7 **SUSP:** Deep Sleep

This bit indicates that the PHY is in Deep Sleep when in L1 state.

Bit 6 **PHYSLEEP:** PHY in Sleep

This bit indicates that the PHY is in the Sleep state.

Bit 5 **ENL1GTG:** Enable sleep clock gating

When this bit is set, core internal clock gating is enabled in Sleep state if the core cannot assert utmi_l1_suspend_n. When this bit is not set, the PHY clock is not gated in Sleep state.

Bit 4 **PHYSUSP:** PHY suspended

Indicates that the PHY has been suspended. This bit is updated once the PHY is suspended after the application has set the STPPCLK bit.

Bits 3:2 Reserved, must be kept at reset value.

Bit 1 **GATEHCLK:** Gate HCLK

The application sets this bit to gate HCLK to modules other than the AHB Slave and Master and wakeup logic when the USB is suspended or the session is not valid. The application clears this bit when the USB is resumed or a new session starts.

Bit 0 **STPPCLK:** Stop PHY clock

The application sets this bit to stop the PHY clock when the USB is suspended, the session is not valid, or the device is disconnected. The application clears this bit when the USB is resumed or a new session starts.

47.15.57 OTG_FS register map

The table below gives the USB OTG register map and reset values.

Table 328. OTG_FS register map and reset values

Offset	Register name	31	30	29	28	27	26	25	24	23	22	21	20	19	18	17	16	15	14	13	12	11	10	9	8	7	6	5	4	3	2	1	0
0x000	OTG_ GOTGCTL	Res.	Res.	Res.	Res.	Res.	Res.	Res.	Res.	Res.	Res.	CURMOD	OTGVER	BSVLD	ASVLD	DBCT	CIDSTS	Res.	Res.	Res.	EHEN	DHNPEN	HSHNPEN	HNPRQ	HNGSCS	BVALOVAL	BVALOEN	AVALOVAL	AVALOEN	VBVALOVA	VBVALOEN	SRQ	SRQSCS
	Reset value											0	0	0	0	0	1				0	0	0	0	0	0	0	0	0	0	0	0	0
0x004	OTG_ GOTGINT	Res.	Res.	Res.	Res.	Res.	Res.	Res.	Res.	Res.	Res.	Res.	Res.	DBCDNE	ADTOCHG	HNGDET	Res.	Res.	Res.	Res.	Res.	Res.	Res.	HNSSCHG	SRSSCHG	Res.	Res.	Res.	Res.	Res.	SEDET	Res.	Res.
	Reset value													0	0	0							-	0	0						0		
0x008	OTG_ GAHBCFG	Res.	Res.	Res.	Res.	Res.	Res.	Res.	Res.	Res.	Res.	Res.	Res.	Res.	Res.	Res.	Res.	Res.	Res.	Res.	Res.	Res.	Res.	Res.	PTXFELVL	TXFELVL	Res.	Res.	Res.	Res.	Res.	Res.	GINTMSK
	Reset value																								0	0							0
0x00C	OTG_ GUSBCFG	Res.	FDMOD	FHMOD	Res.	Res.	Res.	Res.	Res.	Res.	Res.	Res.	Res.	Res.	Res.	Res.	Res.	Res.	Res.	TRDT				HNPCA	SRPCAP	Res.	PHYSEL	Res.	Res.	Res.	TOCAL		
	Reset value		0	0																0	1	0	1	0	0		1				0	0	0
0x010	OTG_ GRSTCTL	AHBIDL	Res.	Res.	Res.	Res.	Res.	Res.	Res.	Res.	Res.	Res.	Res.	Res.	Res.	Res.	Res.	Res.	Res.	Res.	Res.	Res.	TXFNUM					TXFFLSH	RXFFLSH	Res.	FCRST	PSRST	CSRST
	Reset value	1																					0	0	0	0	0	0	0		0	0	0

Table 328. OTG_FS register map and reset values (continued)

Offset	Register name	31	30	29	28	27	26	25	24	23	22	21	20	19	18	17	16	15	14	13	12	11	10	9	8	7	6	5	4	3	2	1	0
0x014	OTG_ GINTSTS	WKUPINT	SRQINT	DISCINT	CIDSCHG	LPMINT	PTXFE	HCINT	HPRTINT	RSTDET	Res.	IPXFR/INCOMPISOOUT	IISOIXFR	OEPINT	IEPINT	Res.	Res.	EOPF	ISOODRP	ENUMDNE	USBRST	USBSUSP	ESUSP	Res.	Res.	GONAKEFF	GINAKEFF	NPTXFE	RXFLVL	SOF	OTGINT	MMIS	CMOD
	Reset value	0	0	0	0	0	1	0	0	0		0	0	0	0			0	0	0	0	0	0			0	0	1	0	0	0	0	0
0x018	OTG_ GINTMSK	WUIM	SRQIM	DISCINT	CIDSCHGM	LPMINTM	PTXFEM	HCIM	PRTIM	RSTDETM	Res.	IPXFRM/IISOOXFRM	IISOIXFRM	OEPINT	IEPINT	Res.	Res.	EOPFM	ISOODRPM	ENUMDNEM	USBRST	USBSUSPM	ESUSPM	Res.	Res.	GONAKEFFM	GINAKEFFM	NPTXFEM	RXFLVLM	SOFM	OTGINT	MMISM	Res.
	Reset value	0	0	0	0	0	0	0	0	0		0	0	0	0			0	0	0	0	0	0			0	0	0	0	0	0	0	
0x01C	OTG_ GRXSTSR (Device mode)	Res.	Res.	Res.	Res.	STSPHST	Res.	Res.	FRMNUM				PKTSTS				DPID		BCNT											EPNUM			
	Reset value					0			0	0	0	0	0	0	0	0	0	0	0	0	0	0	0	0	0	0	0	0	0	0	0	0	0
	OTG_ GRXSTSR (Host mode)	Res.	Res.	Res.	Res.	Res.	Res.	Res.	Res.	Res.	Res.	Res.	PKTSTS				DPID		BCNT											CHNUM			
	Reset value												0	0	0	0	0	0	0	0	0	0	0	0	0	0	0	0	0	0	0	0	0
0x020	OTG_ GRXSTSP (Device mode)	Res.	Res.	Res.	Res.	STSPHST	Res.	Res.	FRMNUM				PKTSTS				DPID		BCNT											EPNUM			
	Reset value					0			0	0	0	0	0	0	0	0	0	0	0	0	0	0	0	0	0	0	0	0	0	0	0	0	0
	OTG_ GRXSTSP (Host mode)	Res.	Res.	Res.	Res.	Res.	Res.	Res.	Res.	Res.	Res.	Res.	PKTSTS				DPID		BCNT											CHNUM			
	Reset value												0	0	0	0	0	0	0	0	0	0	0	0	0	0	0	0	0	0	0	0	0
0x024	OTG_ GRXFSIZ	Res.	Res.	Res.	Res.	Res.	Res.	Res.	Res.	Res.	Res.	Res.	Res.	Res.	Res.	Res.	Res.	RXFD															
	Reset value																	0	0	0	0	0	0	1	0	0	0	0	0	0	0	0	0
0x028	OTG_ HNPTXFSIZ/ OTG_ DIEPTXF0	NPTXFD/TX0FD																NPTXFSA/TX0FSA															
	Reset value	0	0	0	0	0	0	1	0	0	0	0	0	0	0	0	0	0	0	0	0	0	0	1	0	0	0	0	0	0	0	0	0
0x02C	OTG_ HNPTXSTS	Res.	NPTXQTOP							NPTQXSAV								NPTXFSAV															
	Reset value		0	0	0	0	0	0	0	0	0	0	0	1	0	0	0	0	0	0	0	0	0	1	0	0	0	0	0	0	0	0	0
0x038	OTG_ GCCFG	Res.	Res.	Res.	Res.	Res.	Res.	Res.	Res.	Res.	Res.	VBDEN	SDEN	PDEN	DCDEN	BCDEN	PWRDWN	Res.	Res.	Res.	Res.	Res.	Res.	Res.	Res.	Res.	Res.	Res.	Res.	PS2DET	SDET	PDET	DCDET
	Reset value											0	0	0	0	0	0													X	X	X	X

Table 328. OTG_FS register map and reset values (continued)

Offset	Register name	31	30	29	28	27	26	25	24	23	22	21	20	19	18	17	16	15	14	13	12	11	10	9	8	7	6	5	4	3	2	1	0
0x03C	OTG_CID	PRODUCT_ID																															
	Reset value	0	0	0	0	0	0	0	0	0	0	0	0	0	0	0	0	0	0	1	0	0	0	0	0	0	0	0	0	0	0	0	0
0x054	OTG_ GLPMCFG	Res.	Res.	Res.	ENBESL	LPMR CNTSTS			SNDLPM	LPM RCNT			LPMCHIDX				L1RSMOK	SLPSTS	LPM RSP		L1DSEN	BESLTHRS				L1SSEN	REMWAKE	BESL				LPMACK	LPMEN
	Reset value				0	0	0	0	0	0	0	0	0	0	0	0	0	0	0	0	0	0	0	0	0	0	0	0	0	0	0	0	0
0x058	OTG_ GPWRDN	Res.	Res.	Res.	Res.	Res.	Res.	Res.	Res.	ADPIF	Res.	Res.	Res.	Res.	Res.	Res.	Res.	Res.	Res.	Res.	Res.	Res.	Res.	Res.	Res.	Res.	Res.	Res.	Res.	Res.	Res.	Res.	ADPMEN
	Reset value									0																							0
0x060	OTG_ GADPCTL	Res.	Res.	Res.	AR		ADPTOIM	ADPSNSIM	ADPPRBIM	ADPTOIF	ADPSNSIF	ADPPRBIF	ADPEN	ADPRST	ENASNS	ENAPRB	RTIM											PRB PER		PRB DEL TA		PRB DS CHG	
	Reset value				0	0	0	0	0	0	0	0	0	0	0	0	0	0	0	0	0	0	0	0	0	0	0	0	0	0	0	0	0
0x100	OTG_ HPTXFSIZ	PTXFSIZ																PTXSA															
	Reset value	0	0	0	0	0	0	1	0	0	0	0	0	0	0	0	0	0	0	0	0	0	1	0	0	0	0	0	0	0	0	0	0
0x104	OTG_ DIEPTXF1	INEPTXFD																INEPTXSA															
	Reset value	0	0	0	0	0	0	1	0	0	0	0	0	0	0	0	0	0	0	0	0	0	1	0	0	0	0	0	0	0	0	0	0
0x108	OTG_ DIEPTXF2	INEPTXFD																INEPTXSA															
	Reset value	0	0	0	0	0	0	1	0	0	0	0	0	0	0	0	0	0	0	0	0	0	1	1	0	0	0	0	0	0	0	0	0
. . . .	. . . .	. . . .																															
0x114	OTG_ DIEPTXF5	INEPTXFD																INEPTXSA															
	Reset value	0	0	0	0	0	0	1	0	0	0	0	0	0	0	0	0	0	0	0	0	1	1	0	0	0	0	0	0	0	0	0	0
0x400	OTG_ HCFG	Res.	Res.	Res.	Res.	Res.	Res.	Res.	Res.	Res.	Res.	Res.	Res.	Res.	Res.	Res.	Res.	Res.	Res.	Res.	Res.	Res.	Res.	Res.	Res.	Res.	Res.	Res.	Res.	Res.	FSLSS	FSL S PCS	
	Reset value																														0	0	0
0x404	OTG_ HFIR	Res.	Res.	Res.	Res.	Res.	Res.	Res.	Res.	Res.	Res.	Res.	Res.	Res.	Res.	Res.	RLDCTR	FRIVL															
	Reset value																0	1	1	1	0	1	0	1	0	0	1	1	0	0	0	0	0
0x408	OTG_ HFNUM	FTREM																FRNUM															
	Reset value	0	0	0	0	0	0	0	0	0	0	0	0	0	0	0	0	0	0	1	1	1	1	1	1	1	1	1	1	1	1	1	1
0x410	OTG_ HPTXSTS	PTXQTOP								PTXQSAV								PTXFSAVL															
	Reset value	0	0	0	0	0	0	0	0	0	0	0	0	1	0	0	0	0	0	0	0	0	1	0	0	0	0	0	0	0	0	0	0
0x414	OTG_ HAINT	Res.	Res.	Res.	Res.	Res.	Res.	Res.	Res.	Res.	Res.	Res.	Res.	Res.	Res.	Res.	Res.	HAINT															
	Reset value																	0	0	0	0	0	0	0	0	0	0	0	0	0	0	0	0

Table 328. OTG_FS register map and reset values (continued)

Offset	Register name	31	30	29	28	27	26	25	24	23	22	21	20	19	18	17	16	15	14	13	12	11	10	9	8	7	6	5	4	3	2	1	0
0x418	OTG_ HAINTMSK	Res.	Res.	Res.	Res.	Res.	Res.	Res.	Res.	Res.	Res.	Res.	Res.	Res.	Res.	Res.	Res.	HAINTM															
	Reset value																	0	0	0	0	0	0	0	0	0	0	0	0	0	0	0	0
0x440	OTG_ HPRT	Res.	Res.	Res.	Res.	Res.	Res.	Res.	Res.	Res.	Res.	Res.	Res.	Res.	PSPD		PTCTL				PPWR	PLSTS		Res.	PRST	PSUSP	PRES	POCCHNG	POCA	PENCHNG	PENA	PCDET	PCSTS
	Reset value														0	0	0	0	0	0	0	0	0		0	0	0	0	0	0	0	0	0
0x500	OTG_ HCCHAR0	CHENA	CHDIS	ODDFRM	DAD							MCNT		EPTYP		LSDEV	Res.	EPDIR	EPNUM				MPSIZ										
	Reset value	0	0	0	0	0	0	0	0	0	0	0	0	0	0	0		0	0	0	0	0	0	0	0	0	0	0	0	0	0	0	0
0x508	OTG_ HCINT0	Res.	Res.	Res.	Res.	Res.	Res.	Res.	Res.	Res.	Res.	Res.	Res.	Res.	Res.	Res.	Res.	Res.	Res.	Res.	Res.	Res.	DTERR	FRMOR	BBERR	TXERR	Res.	ACK	NAK	STALL	Res.	CHH	XFRC
	Reset value																						0	0	0	0		0	0	0		0	0
0x508	OTG_ HCINT0	Res.	Res.	Res.	Res.	Res.	Res.	Res.	Res.	Res.	Res.	Res.	Res.	Res.	Res.	Res.	Res.	Res.	Res.	Res.	Res.	Res.	DTERR	FRMOR	BBERR	TXERR	NYET	ACK	NAK	STALL	AHBERR	CHH	XFRC
	Reset value																						0	0	0	0	0	0	0	0	0	0	0
0x50C	OTG_ HCINTMSK0	Res.	Res.	Res.	Res.	Res.	Res.	Res.	Res.	Res.	Res.	Res.	Res.	Res.	Res.	Res.	Res.	Res.	Res.	Res.	Res.	Res.	DTERRM	FRMORM	BBERRM	TXERRM		ACKM	NAKM	STALLM	Res.	CHHM	XFRCM
	Reset value																						0	0	0	0		0	0	0		0	0
0x510	OTG_ HCTSIZ0	DOPNG	DPID		PKTCNT										XFRSIZ																		
	Reset value	0	0	0	0	0	0	0	0	0	0	0	0	0	0	0	0	0	0	0	0	0	0	0	0	0	0	0	0	0	0	0	0
0x520	OTG_ HCCHAR1	CHENA	CHDIS	ODDFRM	DAD							MCNT		EPTYP		LSDEV	Res.	EPDIR	EPNUM				MPSIZ										
	Reset value	0	0	0	0	0	0	0	0	0	0	0	0	0	0	0		0	0	0	0	0	0	0	0	0	0	0	0	0	0	0	0
0x528	OTG_ HCINT1	Res.	Res.	Res.	Res.	Res.	Res.	Res.	Res.	Res.	Res.	Res.	Res.	Res.	Res.	Res.	Res.	Res.	Res.	Res.	Res.	Res.	DTERR	FRMOR	BBERR	TXERR	Res.	ACK	NAK	STALL	Res.	CHH	XFRC
	Reset value																						0	0	0	0		0	0	0		0	0
0x528	OTG_ HCINT1	Res.	Res.	Res.	Res.	Res.	Res.	Res.	Res.	Res.	Res.	Res.	Res.	Res.	Res.	Res.	Res.	Res.	Res.	Res.	Res.	Res.	DTERR	FRMOR	BBERR	TXERR	NYET	ACK	NAK	STALL	AHBERR	CHH	XFRC
	Reset value																						0	0	0	0	0	0	0	0	0	0	0
0x52C	OTG_ HCINTMSK1	Res.	Res.	Res.	Res.	Res.	Res.	Res.	Res.	Res.	Res.	Res.	Res.	Res.	Res.	Res.	Res.	Res.	Res.	Res.	Res.	Res.	DTERRM	FRMORM	BBERRM	TXERRM		ACKM	NAKM	STALLM	Res.	CHHM	XFRCM
	Reset value																						0	0	0	0		0	0	0		0	0

Table 328. OTG_FS register map and reset values (continued)

Offset	Register name	31	30	29	28	27	26	25	24	23	22	21	20	19	18	17	16	15	14	13	12	11	10	9	8	7	6	5	4	3	2	1	0
0x530	OTG_ HCTSIZ1	DOPNG	DPID		PKTCNT										XFRSIZ																		
	Reset value	0	0	0	0	0	0	0	0	0	0	0	0	0	0	0	0	0	0	0	0	0	0	0	0	0	0	0	0	0	0	0	0
. . . .	. . . .	. . . .																															
0x660	OTG_ HCCHAR11	CHENA	CHDIS	ODDFRM	DAD							MCNT		EPTYP		LSDEV	Res.	EPDIR	EPNUM				MPSIZ										
	Reset value	0	0	0	0	0	0	0	0	0	0	0	0	0	0	0		0	0	0	0	0	0	0	0	0	0	0	0	0	0	0	0
0x668	OTG_ HCINT11	Res.	Res.	Res.	Res.	Res.	Res.	Res.	Res.	Res.	Res.	Res.	Res.	Res.	Res.	Res.	Res.	Res.	Res.	Res.	Res.	Res.	DTERR	FRMOR	BBERR	TXERR	Res.	ACK	NAK	STALL	Res.	CHH	XFRC
	Reset value																						0	0	0	0		0	0	0		0	0
0x66C	OTG_ HCINTMSK11	Res.	Res.	Res.	Res.	Res.	Res.	Res.	Res.	Res.	Res.	Res.	Res.	Res.	Res.	Res.	Res.	Res.	Res.	Res.	Res.	Res.	DTERRM	FRMORM	BBERRM	TXERRM		ACKM	NAKM	STALLM	Res.	CHHM	XFRCM
	Reset value																						0	0	0	0		0	0	0		0	0
0x670	OTG_ HCTSIZ11	DOPNG	DPID		PKTCNT										XFRSIZ																		
	Reset value	0	0	0	0	0	0	0	0	0	0	0	0	0	0	0	0	0	0	0	0	0	0	0	0	0	0	0	0	0	0	0	0
0x800	OTG_ DCFG	Res.	Res.	Res.	Res.	Res.	Res.	Res.	Res.	Res.	Res.	Res.	Res.	Res.	Res.	Res.	Res.	ERRATIM(1)	XCVRDLY	Res.	PFIVL		DAD							Res.	NZLSOHSK	DSPD	
	Reset value																	0	0		0	0	0	0	0	0	0	0	0		0	0	0
0x804	OTG_ DCTL	Res.	Res.	Res.	Res.	Res.	Res.	Res.	Res.	Res.	Res.	Res.	Res.	Res.	DSBESLRJCT	Res.	Res.	Res.	Res.	Res.	Res.	POPRGDNE	CGONAK	SGONAK	CGINAK	SGINAK	TCTL			GONSTS	GINSTS	SDIS	RWUSIG
	Reset value														0							0	0	0	0	0	0	0	0	0	0	1	0
0x808	OTG_ DSTS	Res.	Res.	Res.	Res.	Res.	Res.	Res.	Res.	DEV LN STS		FNSOF															Res.	Res.	Res.	Res.	EERR	ENUMSPD	SUSPSTS
	Reset value									0	0	0	0	0	0	0	0	0	0	0	0	0	0	0	0					0	0	0	0
0x810	OTG_ DIEPMSK	Res.	Res.	Res.	Res.	Res.	Res.	Res.	Res.	Res.	Res.	Res.	Res.	Res.	Res.	Res.	Res.	Res.	Res.	NAKM	Res.	Res.	Res.	Res.	Res.	Res.	INEPNEM	INEPNMM	ITTXFEMSK	TOM	Res.	EPDM	XFRCM
	Reset value																			0							0	0	0	0		0	0

Table 328. OTG_FS register map and reset values (continued)

Offset	Register name	31	30	29	28	27	26	25	24	23	22	21	20	19	18	17	16	15	14	13	12	11	10	9	8	7	6	5	4	3	2	1	0
0x814	OTG_ DOEPMSK	Res.	Res.	Res.	Res.	Res.	Res.	Res.	Res.	Res.	Res.	Res.	Res.	Res.	Res.	Res.	Res.	Res.	Res.	NAKMSK	BERRM	Res.	Res.	Res.	OUTPKTERRM	Res.	Res.	Res.	OTEPDM	STUPM	Res.	EPDM	XFRCM
	Reset value																			0	0				0				0	0		0	0
0x818	OTG_ DAINT	OEPINT																IEPINT															
	Reset value	0	0	0	0	0	0	0	0	0	0	0	0	0	0	0	0	0	0	0	0	0	0	0	0	0	0	0	0	0	0	0	0
0x81C	OTG_ DAINTMSK	OEPM																IEPM															
	Reset value	0	0	0	0	0	0	0	0	0	0	0	0	0	0	0	0	0	0	0	0	0	0	0	0	0	0	0	0	0	0	0	0
0x828	OTG_ DVBUSDIS	Res.	Res.	Res.	Res.	Res.	Res.	Res.	Res.	Res.	Res.	Res.	Res.	Res.	Res.	Res.	Res.	VBUSDT															
	Reset value																	0	0	0	1	0	1	1	1	1	1	0	1	0	1	1	1
0x82C	OTG_DVB USPULSE	Res.	Res.	Res.	Res.	Res.	Res.	Res.	Res.	Res.	Res.	Res.	Res.	Res.	Res.	Res.	Res.	DVBUSP															
	Reset value																	0	0	0	0	0	1	0	1	1	0	1	1	1	0	0	0
0x834	OTG_DIE PEMPMSK	Res.	Res.	Res.	Res.	Res.	Res.	Res.	Res.	Res.	Res.	Res.	Res.	Res.	Res.	Res.	Res.	INEPTXFEM															
	Reset value																	0	0	0	0	0	0	0	0	0	0	0	0	0	0	0	0
0x900	OTG_ DIEPCTL0	EPENA	EPDIS	Res.	Res.	SNAK	CNAK	TXFNUM				STALL	Res.	EPTYP		NAKSTS	Res.	USBAEP	Res.	Res.	Res.	Res.	Res.	Res.	Res.	Res.	Res.	Res.	Res.	Res.	Res.	MPSIZ	
	Reset value	0	0			0	0	0	0	0	0	0		0	0	0		1														0	0
0x908	OTG_ DIEPINT0	Res.	Res.	Res.	Res.	Res.	Res.	Res.	Res.	Res.	Res.	Res.	Res.	Res.	Res.	Res.	Res.	Res.	Res.	NAK	Res.	PKTDRPSTS	Res.	Res.	Res.	TXFE	INEPNE	INEPNM	ITTXFE	TOC	Res.	EPDISD	XFRC
	Reset value																			0		0				1	0	0	0	0		0	0
0x910	OTG_ DIEPTSIZ0	Res.	Res.	Res.	Res.	Res.	Res.	Res.	Res.	Res.	Res.	Res.	PKT CNT		Res.	Res.	Res.	Res.	Res.	Res.	Res.	Res.	Res.	Res.	Res.	Res.	XFRSIZ						
	Reset value												0	0													0	0	0	0	0	0	0
0x918	OTG_ DTXFSTS0	Res.	Res.	Res.	Res.	Res.	Res.	Res.	Res.	Res.	Res.	Res.	Res.	Res.	Res.	Res.	Res.	INEPTFSAV															
	Reset value																	0	0	0	0	0	0	1	0	0	0	0	0	0	0	0	0
0x920	OTG_ DIEPCTL1	EPENA	EPDIS	SODDFRM/SD1PID	SD0PID/SEVNFRM	SNAK	CNAK	TXFNUM				STALL	Res.	EPTYP		NAKSTS	EONUM/DPID	USBAEP	Res.	Res.	Res.	Res.	MPSIZ										
	Reset value	0	0	0	0	0	0	0	0	0	0	0		0	0	0	0	0					0	0	0	0	0	0	0	0	0	0	0

Table 328. OTG_FS register map and reset values (continued)

Offset	Register name	31	30	29	28	27	26	25	24	23	22	21	20	19	18	17	16	15	14	13	12	11	10	9	8	7	6	5	4	3	2	1	0
0x928	OTG_ DIEPINT1	Res.	Res.	Res.	Res.	Res.	Res.	Res.	Res.	Res.	Res.	Res.	Res.	Res.	Res.	Res.	Res.	Res.	Res.	NAK	Res.	PKTDRPSTS	Res.	Res.	Res.	TXFE	INEPNE	INEPNM	ITTXFE	TOC	Res.	EPDISD	XFRC
	Reset value																			0		0				1	0	0	0	0		0	0
0x930	OTG_ DIEPTSIZ1	Res.	MCNT		PKTCNT										XFRSIZ																		
	Reset value		0	0	0	0	0	0	0	0	0	0	0	0	0	0	0	0	0	0	0	0	0	0	0	0	0	0	0	0	0	0	0
0x938	OTG_ DTXFSTS1	Res.	Res.	Res.	Res.	Res.	Res.	Res.	Res.	Res.	Res.	Res.	Res.	Res.	Res.	Res.	Res.	INEPTFSAV															
	Reset value																	0	0	0	0	0	0	1	0	0	0	0	0	0	0	0	0
0x940	OTG_ DIEPCTL2	EPENA	EPDIS	SODDFRM	SD0PID/SEVNFRM	SNAK	CNAK	TXFNUM				STALL	Res.	EPTYP		NAKSTS	EONUM/DPID	USBAEP	Res.	Res.	Res.	Res.	MPSIZ										
	Reset value	0	0	0	0	0	0	0	0	0	0	0		0	0	0	0	0					0	0	0	0	0	0	0	0	0	0	0
. . . .	. . . .	. . . .																															
0x9A0	OTG_ DIEPCTL5	EPENA	EPDIS	SODDFRM	SD0PID/SEVNFRM	SNAK	CNAK	TXFNUM				STALL	Res.	EPTYP		NAKSTS	EONUM/DPID	USBAEP	Res.	Res.	Res.	Res.	MPSIZ										
	Reset value	0	0	0	0	0	0	0	0	0	0	0		0	0	0	0	0					0	0	0	0	0	0	0	0	0	0	0
. . . .	. . . .	. . . .																															
0x9A8	OTG_ DIEPINT5	Res.	Res.	Res.	Res.	Res.	Res.	Res.	Res.	Res.	Res.	Res.	Res.	Res.	Res.	Res.	Res.	Res.	Res.	NAK	Res.	PKTDRPSTS	Res.	Res.	Res.	TXFE	INEPNE	INEPNM	ITTXFE	TOC	Res.	EPDISD	XFRC
	Reset value																			0		0				1	0	0	0	0		0	0
. . . .	. . . .	. . . .																															
0x9B8	OTG_ DTXFSTS5	Res.	Res.	Res.	Res.	Res.	Res.	Res.	Res.	Res.	Res.	Res.	Res.	Res.	Res.	Res.	Res.	INEPTFSAV															
	Reset value																	0	0	0	0	0	0	1	0	0	0	0	0	0	0	0	0
. . . .	. . . .	. . . .																															

Table 328. OTG_FS register map and reset values (continued)

Offset	Register name	31	30	29	28	27	26	25	24	23	22	21	20	19	18	17	16	15	14	13	12	11	10	9	8	7	6	5	4	3	2	1	0
0x9B0	OTG_ DIEPTSIZ5	Res.	MCNT		PKTCNT										XFRSIZ																		
	Reset value		0	0	0	0	0	0	0	0	0	0	0	0	0	0	0	0	0	0	0	0	0	0	0	0	0	0	0	0	0	0	0
0xB00	OTG_ DOEPCTL0	EPENA	EPDIS	Res.	Res.	SNAK	CNAK	Res.	Res.	Res.	Res.	STALL	SNPM	EPTYP		NAKSTS	Res.	USBAEP	Res.	Res.	Res.	Res.	Res.	Res.	Res.	Res.	Res.	Res.	Res.	Res.	Res.	MPSIZ	
	Reset value	0	0			0	0					0	0	0	0	0		1														0	0
0xB08	OTG_ DOEPINT0	Res.	Res.	Res.	Res.	Res.	Res.	Res.	Res.	Res.	Res.	Res.	Res.	Res.	Res.	Res.	Res.	Res.	Res.	NAK	BERR	Res.	Res.	Res.	Res.	Res.	Res.	STSPHSRX	OTEPDIS	STUP	Res.	EPDISD	XFRC
	Reset value																			0	0							0	0	0		0	0
0xB10	OTG_ DOEPTSIZ0	Res.	STU P CNT		Res.	Res.	Res.	Res.	Res.	Res.	Res.	Res.	Res.	PKTCNT	Res.	Res.	Res.	Res.	Res.	Res.	Res.	Res.	Res.	Res.	Res.	Res.	XFRSIZ						
	Reset value		0	0										0													0	0	0	0	0	0	0
0xB20	OTG_ DOEPCTL1	EPENA	EPDIS	SODDFRM	SD0PID/SEVNFRM	SNAK	CNAK	Res.	Res.	Res.	Res.	STALL	SNPM	EP TYP		NAKSTS	EONUM/DPID	USBAEP	Res.	Res.	Res.	Res.	MPSIZ										
	Reset value	0	0	0	0	0	0					0	0	0	0	0	0	0					0	0	0	0	0	0	0	0	0	0	0
0xB28	OTG_ DOEPINT1	Res.	Res.	Res.	Res.	Res.	Res.	Res.	Res.	Res.	Res.	Res.	Res.	Res.	Res.	Res.	Res.	Res.	Res.	NAK	BERR	Res.	Res.	Res.	Res.	Res.	Res.	STSPHSRX	OTEPDIS	STUP	Res.	EPDISD	XFRC
	Reset value																			0	0							0	0	0		0	0
0xB30	OTG_ DOEPTSIZ1	Res.	RXDPID/ STUPCNT		PKTCNT										XFRSIZ																		
	Reset value		0	0	0	0	0	0	0	0	0	0	0	0	0	0	0	0	0	0	0	0	0	0	0	0	0	0	0	0	0	0	0
. . . .	. . . .	. . . .																															
0xBA0	OTG_ DOEPCTL5	EPENA	EPDIS	SODDFRM	SD0PID/SEVNFRM	SNAK	CNAK	Res.	Res.	Res.	Res.	STALL	SNPM	EPTYP		NAKSTS	EONUM/DPID	USBAEP	Res.	Res.	Res.	Res.	MPSIZ										
	Reset value	0	0	0	0	0	0					0	0	0	0	0	0	0					0	0	0	0	0	0	0	0	0	0	0

Table 328. OTG_FS register map and reset values (continued)

Offset	Register name	31	30	29	28	27	26	25	24	23	22	21	20	19	18	17	16	15	14	13	12	11	10	9	8	7	6	5	4	3	2	1	0
0xBA8	**OTG_ DOEPINT5**	Res.	Res.	Res.	Res.	Res.	Res.	Res.	Res.	Res.	Res.	Res.	Res.	Res.	Res.	Res.	Res.	Res.	Res.	NAK	BERR	Res.	Res.	Res.	Res.	Res.	Res.	STSPHSRX	OTEPDIS	STUP	Res.	EPDISD	XFRC
	Reset value																			0	0					-		0	0	0		0	0
0xBB0	**OTG_ DOEPTSIZ5**	Res.	RXDPID/ STUPCNT		PKTCNT										XFRSIZ																		
	Reset value		0	0	0	0	0	0	0	0	0	0	0	0	0	0	0	0	0	0	0	0	0	0	0	0	0	0	0	0	0	0	0
0xE00	**OTG_ PCGCCTL**	Res.	Res.	Res.	Res.	Res.	Res.	Res.	Res.	Res.	Res.	Res.	Res.	Res.	Res.	Res.	Res.	Res.	Res.	Res.	Res.	Res.	Res.	Res.	Res.	SUSP	PHYSLEEP	ENL1GTG	PHYSUSP	Res.	Res.	GATEHCLK	STPPCLK
	Reset value																									0	0	0	0			0	0

1. This bit is reserved for STM32L47x/L48x devices.

Refer to *Section 2.2 on page 75* for the register boundary addresses.

47.16 OTG_FS programming model

47.16.1 Core initialization

The application must perform the core initialization sequence. If the cable is connected during power-up, the current mode of operation bit in the OTG_GINTSTS (CMOD bit in OTG_GINTSTS) reflects the mode. The OTG_FS controller enters host mode when an “A” plug is connected or device mode when a “B” plug is connected.

This section explains the initialization of the OTG_FS controller after power-on. The application must follow the initialization sequence irrespective of host or device mode operation. All core global registers are initialized according to the core’s configuration:

1. Program the following fields in the OTG_GAHBCFG register:
   - Global interrupt mask bit GINTMSK = 1
   - Rx FIFO non-empty (RXFLVL bit in OTG_GINTSTS)
   - Periodic Tx FIFO empty level
2. Program the following fields in the OTG_GUSBCFG register:
   - HNP capable bit
   - SRP capable bit
   - OTG_FS timeout calibration field
   - USB turnaround time field
3. The software must unmask the following bits in the OTG_GINTMSK register:

   OTG interrupt mask

   Mode mismatch interrupt mask
4. The software can read the CMOD bit in OTG_GINTSTS to determine whether the OTG_FS controller is operating in host or device mode.

47.16.2 Host initialization

To initialize the core as host, the application must perform the following steps:

1. Program the HPRTINT in the OTG_GINTMSK register to unmask
2. Program the OTG_HCFG register to select full-speed host
3. Program the PPWR bit in OTG_HPRT to 1. This drives V_{BUS} on the USB.
4. Wait for the PCDET interrupt in OTG_HPRT0. This indicates that a device is connecting to the port.
5. Program the PRST bit in OTG_HPRT to 1. This starts the reset process.
6. Wait at least 10 ms for the reset process to complete.
7. Program the PRST bit in OTG_HPRT to 0.
8. Wait for the PENCHNG interrupt in OTG_HPRT.
9. Read the PSPD bit in OTG_HPRT to get the enumerated speed.
10. Program the HFIR register with a value corresponding to the selected PHY clock 1
11. Program the FSLSPCS field in the OTG_HCFG register following the speed of the device detected in step 9. If FSLSPCS has been changed a port reset must be performed.
12. Program the OTG_GRXFSIZ register to select the size of the receive FIFO.
13. Program the OTG_HNPTXFSIZ register to select the size and the start address of the Non-periodic transmit FIFO for non-periodic transactions.
14. Program the OTG_HPTXFSIZ register to select the size and start address of the periodic transmit FIFO for periodic transactions.

To communicate with devices, the system software must initialize and enable at least one channel.

47.16.3 Device initialization

The application must perform the following steps to initialize the core as a device on power-up or after a mode change from host to device.

1. Program the following fields in the OTG_DCFG register:
   - Device speed
   - Non-zero-length status OUT handshake
   - Periodic Frame Interval
2. Clear the DCTL.SDIS bit. The core issues a connect after this bit is cleared.
3. Program the OTG_GINTMSK register to unmask the following interrupts:
   - USB reset
   - Enumeration done
   - Early suspend
   - USB suspend
   - SOF
4. Wait for the USBRST interrupt in OTG_GINTSTS. It indicates that a reset has been detected on the USB that lasts for about 10 ms on receiving this interrupt.
5. Wait for the ENUMDNE interrupt in OTG_GINTSTS. This interrupt indicates the end of reset on the USB. On receiving this interrupt, the application must read the OTG_DSTS register to determine the enumeration speed and perform the steps listed in *Endpoint initialization on enumeration completion on page 1806*.

At this point, the device is ready to accept SOF packets and perform control transfers on control endpoint 0.

47.16.4 Host programming model

Channel initialization

The application must initialize one or more channels before it can communicate with connected devices. To initialize and enable a channel, the application must perform the following steps:

1. Program the OTG_GINTMSK register to unmask the following:
2. Channel interrupt
   - Non-periodic transmit FIFO empty for OUT transactions (applicable when operating in pipelined transaction-level with the packet count field programmed with more than one).
   - Non-periodic transmit FIFO half-empty for OUT transactions (applicable when operating in pipelined transaction-level with the packet count field programmed with more than one).
3. Program the OTG_HAINTMSK register to unmask the selected channels' interrupts.
4. Program the OTG_HCINTMSK register to unmask the transaction-related interrupts of interest given in the host channel interrupt register.
5. Program the selected channel's OTG_HCTSIZx register with the total transfer size, in bytes, and the expected number of packets, including short packets. The application must program the PID field with the initial data PID (to be used on the first OUT transaction or to be expected from the first IN transaction).
6. Program the OTG_HCCHARx register of the selected channel with the device's endpoint characteristics, such as type, speed, direction, and so forth. (The channel can be enabled by setting the channel enable bit to 1 only when the application is ready to transmit or receive any packet).

Halting a channel

The application can disable any channel by programming the OTG_HCCHARx register with the CHDIS and CHENA bits set to 1. This enables the OTG_FS host to flush the posted requests (if any) and generates a channel halted interrupt. The application must wait for the CHH interrupt in OTG_HCINTx before reallocating the channel for other transactions. The OTG_FS host does not interrupt the transaction that has already been started on the USB.

Before disabling a channel, the application must ensure that there is at least one free space available in the non-periodic request queue (when disabling a non-periodic channel) or the periodic request queue (when disabling a periodic channel). The application can simply flush the posted requests when the request queue is full (before disabling the channel), by programming the OTG_HCCHARx register with the CHDIS bit set to 1, and the CHENA bit cleared to 0.

The application is expected to disable a channel on any of the following conditions:

1. When an STALL, TXERR, BBERR or DTERR interrupt in OTG_HCINTx is received for an IN or OUT channel. The application must be able to receive other interrupts (DTERR, Nak, data, TXERR) for the same channel before receiving the halt.
2. When a DISCINT (disconnect device) interrupt in OTG_GINTSTS is received. (The application is expected to disable all enabled channels).
3. When the application aborts a transfer before normal completion.

Operational model

The application must initialize a channel before communicating to the connected device. This section explains the sequence of operation to be performed for different types of USB transactions.

- **Writing the transmit FIFO**

  The OTG_FS host automatically writes an entry (OUT request) to the periodic/non-periodic request queue, along with the last 32-bit word write of a packet. The application must ensure that at least one free space is available in the periodic/non-periodic request queue before starting to write to the transmit FIFO. The application must always write to the transmit FIFO in 32-bit words. If the packet size is non-32-bit word aligned, the application must use padding. The OTG_FS host determines the actual packet size based on the programmed maximum packet size and transfer size.

Figure 539. Transmit FIFO write task

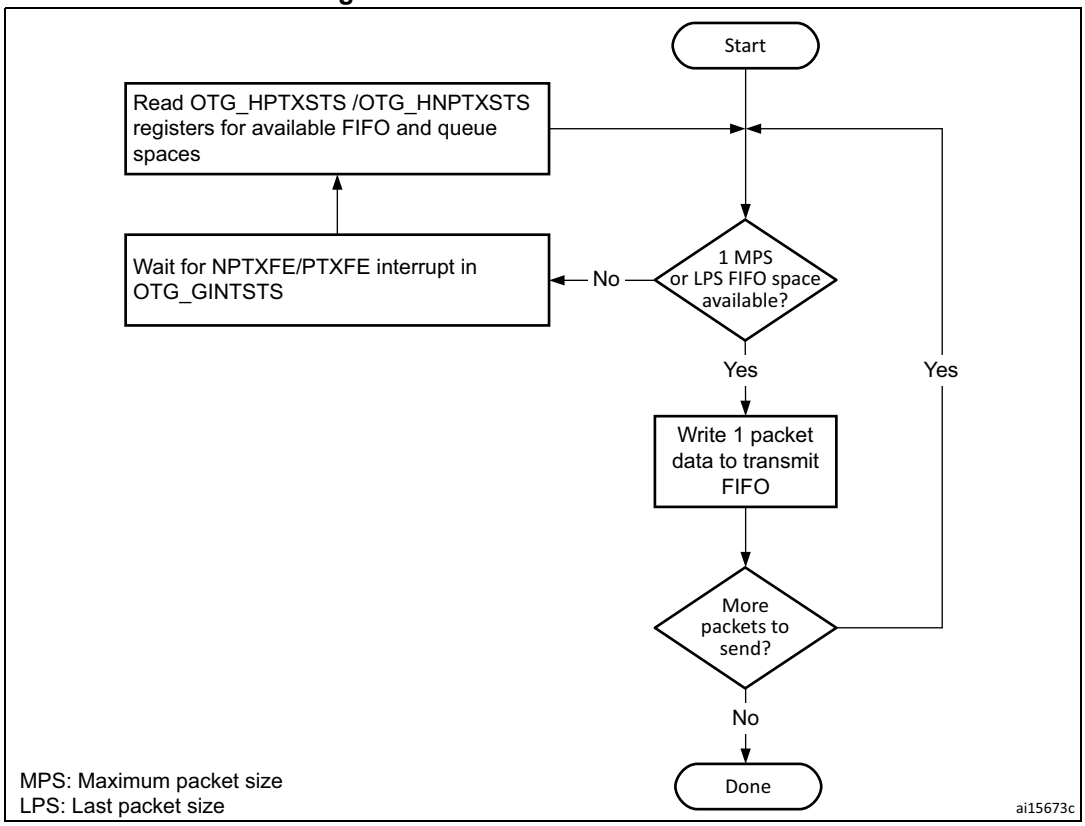

- **Reading the receive FIFO**

  The application must ignore all packet statuses other than IN data packet (bx0010).

Figure 540. Receive FIFO read task

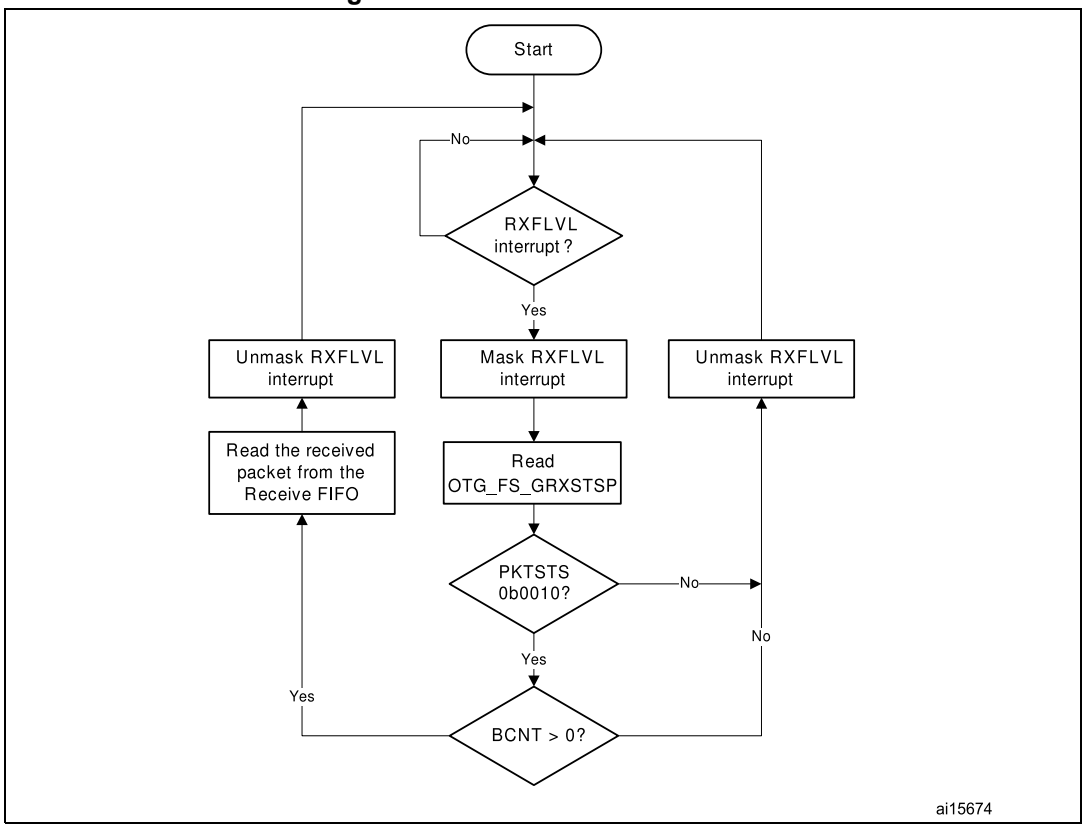

- **Bulk and control OUT/SETUP transactions**

  A typical bulk or control OUT/SETUP pipelined transaction-level operation is shown in *Figure 541*. See channel 1 (ch_1). Two bulk OUT packets are transmitted. A control SETUP transaction operates in the same way but has only one packet. The assumptions are:

  – The application is attempting to send two maximum-packet-size packets (transfer size = 1, 024 bytes).

  – The non-periodic transmit FIFO can hold two packets (128 bytes for FS).

  – The non-periodic request queue depth = 4.

- **Normal bulk and control OUT/SETUP operations**

  The sequence of operations in (channel 1) is as follows:

1. Initialize channel 1
2. Write the first packet for channel 1
3. Along with the last word write, the core writes an entry to the non-periodic request queue
4. As soon as the non-periodic queue becomes non-empty, the core attempts to send an OUT token in the current frame
5. Write the second (last) packet for channel 1
6. The core generates the XFRC interrupt as soon as the last transaction is completed successfully
7. In response to the XFRC interrupt, de-allocate the channel for other transfers
8. Handling non-ACK responses

Figure 541. Normal bulk/control OUT/SETUP

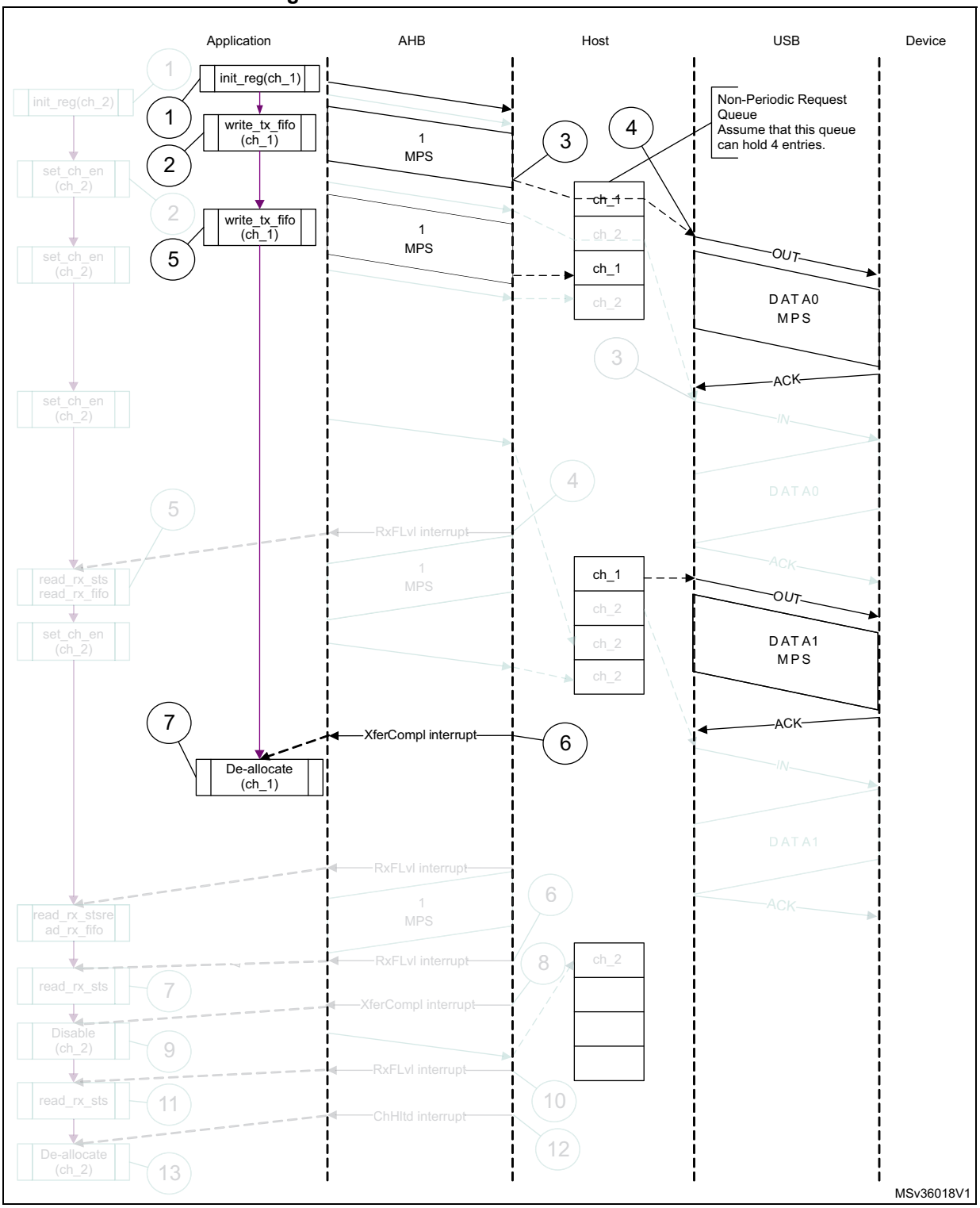

1. The grayed elements are not relevant in the context of this figure.

The channel-specific interrupt service routine for bulk and control OUT/SETUP transactions is shown in the following code samples.

- **Interrupt service routine for bulk/control OUT/SETUP and bulk/control IN transactions**

  a) Bulk/control OUT/SETUP

```
Unmask (NAK/TXERR/STALL/XFRC)
if (XFRC)
   {
   Reset Error Count
   Mask ACK
   De-allocate Channel
   }
else if (STALL)
   {
   Transfer Done = 1
   Unmask CHH
   Disable Channel
   }
else if (NAK or TXERR )
   {
   Rewind Buffer Pointers
   Unmask CHH
   Disable Channel
   if (TXERR)
      {
      Increment Error Count
      Unmask ACK
      }
   else
      {
      Reset Error Count
      }
      }
else if (CHH)
   {
   Mask CHH
   if (Transfer Done or (Error_count == 3))
      {
      De-allocate Channel
      }
   else
      {
      Re-initialize Channel
      }
   }
```

```
   else if (ACK)
      {
      Reset Error Count
      Mask ACK
      }
```

The application is expected to write the data packets into the transmit FIFO when the space is available in the transmit FIFO and the request queue. The application can make use of the NPTXFE interrupt in OTG_GINTSTS to find the transmit FIFO space.

b) Bulk/control IN

```
Unmask (TXERR/XFRC/BBERR/STALL/DTERR)
if (XFRC)
   {
   Reset Error Count
   Unmask CHH
   Disable Channel
   Reset Error Count
   Mask ACK
   }
else if (TXERR or BBERR or STALL)
   {
   Unmask CHH
   Disable Channel
   if (TXERR)
      {
      Increment Error Count
      Unmask ACK
      }
   }
else if (CHH)
   {
   Mask CHH
   if (Transfer Done or (Error_count == 3))
      {
      De-allocate Channel
      }
   else
      {
      Re-initialize Channel
      }
   }
else if (ACK)
   {
   Reset Error Count
   Mask ACK
   }
```

```
else if (DTERR)
   {
   Reset Error Count
   }
```

The application is expected to write the requests as and when the request queue space is available and until the XFRC interrupt is received.

- **Bulk and control IN transactions**

  A typical bulk or control IN pipelined transaction-level operation is shown in *Figure 542*. See channel 2 (ch_2). The assumptions are:

  – The application is attempting to receive two maximum-packet-size packets (transfer size = 1 024 bytes).

  – The receive FIFO can contain at least one maximum-packet-size packet and two status words per packet (72 bytes for FS).

  – The non-periodic request queue depth = 4.

Figure 542. Bulk/control IN transactions

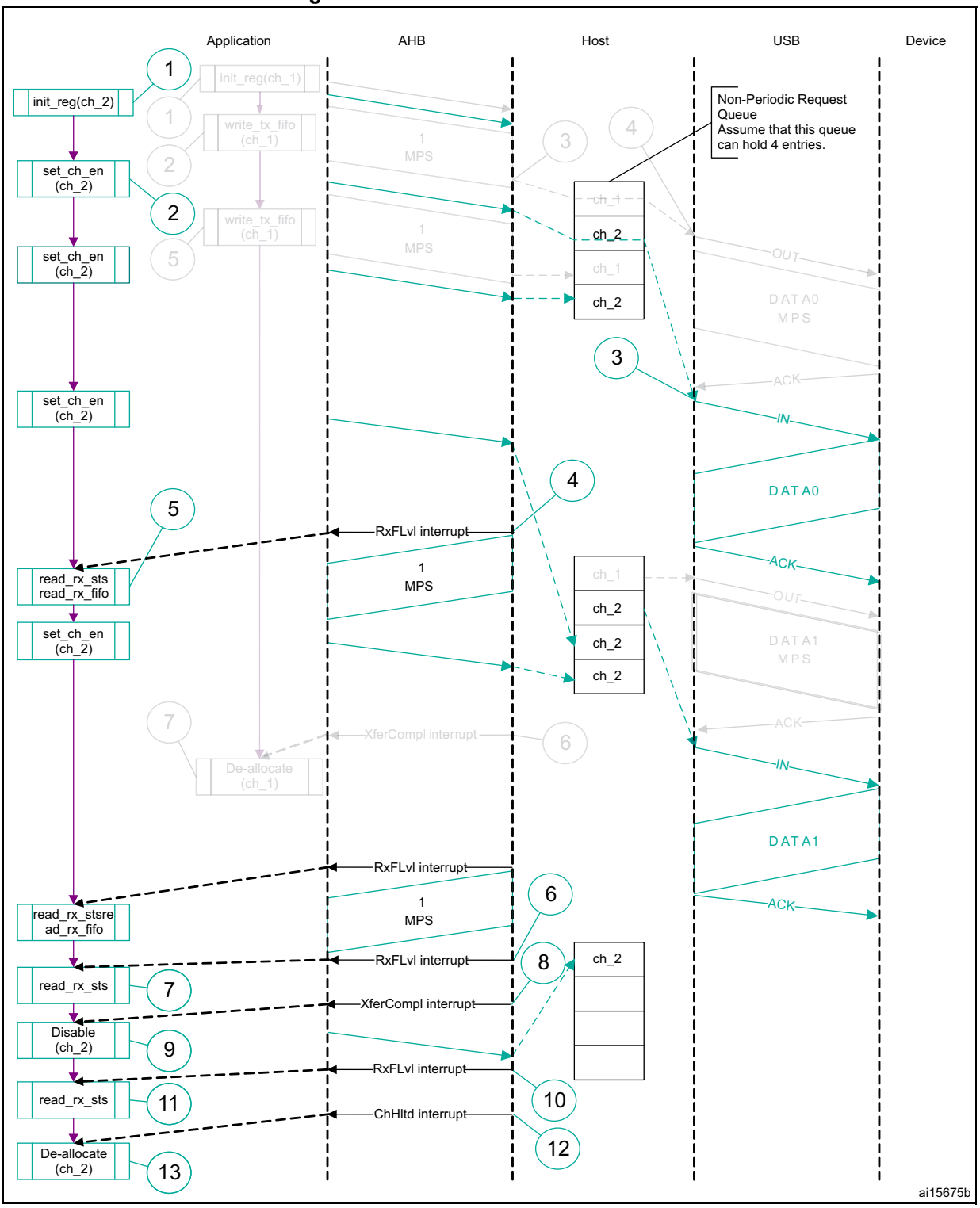

1. The grayed elements are not relevant in the context of this figure.

The sequence of operations is as follows:

1. Initialize channel 2.
2. Set the CHENA bit in OTG_HCCHAR2 to write an IN request to the non-periodic request queue.
3. The core attempts to send an IN token after completing the current OUT transaction.
4. The core generates an RXFLVL interrupt as soon as the received packet is written to the receive FIFO.
5. In response to the RXFLVL interrupt, mask the RXFLVL interrupt and read the received packet status to determine the number of bytes received, then read the receive FIFO accordingly. Following this, unmask the RXFLVL interrupt.
6. The core generates the RXFLVL interrupt for the transfer completion status entry in the receive FIFO.
7. The application must read and ignore the receive packet status when the receive packet status is not an IN data packet (PKTSTS in OTG_GRXSTSR ≠ 0b0010).
8. The core generates the XFRC interrupt as soon as the receive packet status is read.
9. In response to the XFRC interrupt, disable the channel and stop writing the OTG_HCCHAR2 register for further requests. The core writes a channel disable request to the non-periodic request queue as soon as the OTG_HCCHAR2 register is written.
10. The core generates the RXFLVL interrupt as soon as the halt status is written to the receive FIFO.
11. Read and ignore the receive packet status.
12. The core generates a CHH interrupt as soon as the halt status is popped from the receive FIFO.
13. In response to the CHH interrupt, de-allocate the channel for other transfers.
14. Handling non-ACK responses

- **Control transactions**

  Setup, data, and status stages of a control transfer must be performed as three separate transfers. setup-, data- or status-stage OUT transactions are performed similarly to the bulk OUT transactions explained previously. Data- or status-stage IN transactions are performed similarly to the bulk IN transactions explained previously. For all three stages, the application is expected to set the EPTYP field in OTG_HCCHAR1 to control. During the setup stage, the application is expected to set the PID field in OTG_HCTSIZ1 to SETUP.

- **Interrupt OUT transactions**

  A typical interrupt OUT operation is shown in *Figure 543*. The assumptions are:

  – The application is attempting to send one packet in every frame (up to 1 maximum packet size), starting with the odd frame (transfer size = 1 024 bytes)
  – The periodic transmit FIFO can hold one packet (1 KB)
  – Periodic request queue depth = 4

  The sequence of operations is as follows:

1. Initialize and enable channel 1. The application must set the ODDFRM bit in OTG_HCCHAR1.
2. Write the first packet for channel 1.
3. Along with the last word write of each packet, the OTG_FS host writes an entry to the periodic request queue.
4. The OTG_FS host attempts to send an OUT token in the next (odd) frame.
5. The OTG_FS host generates an XFRC interrupt as soon as the last packet is transmitted successfully.
6. In response to the XFRC interrupt, reinitialize the channel for the next transfer.

Figure 543. Normal interrupt OUT

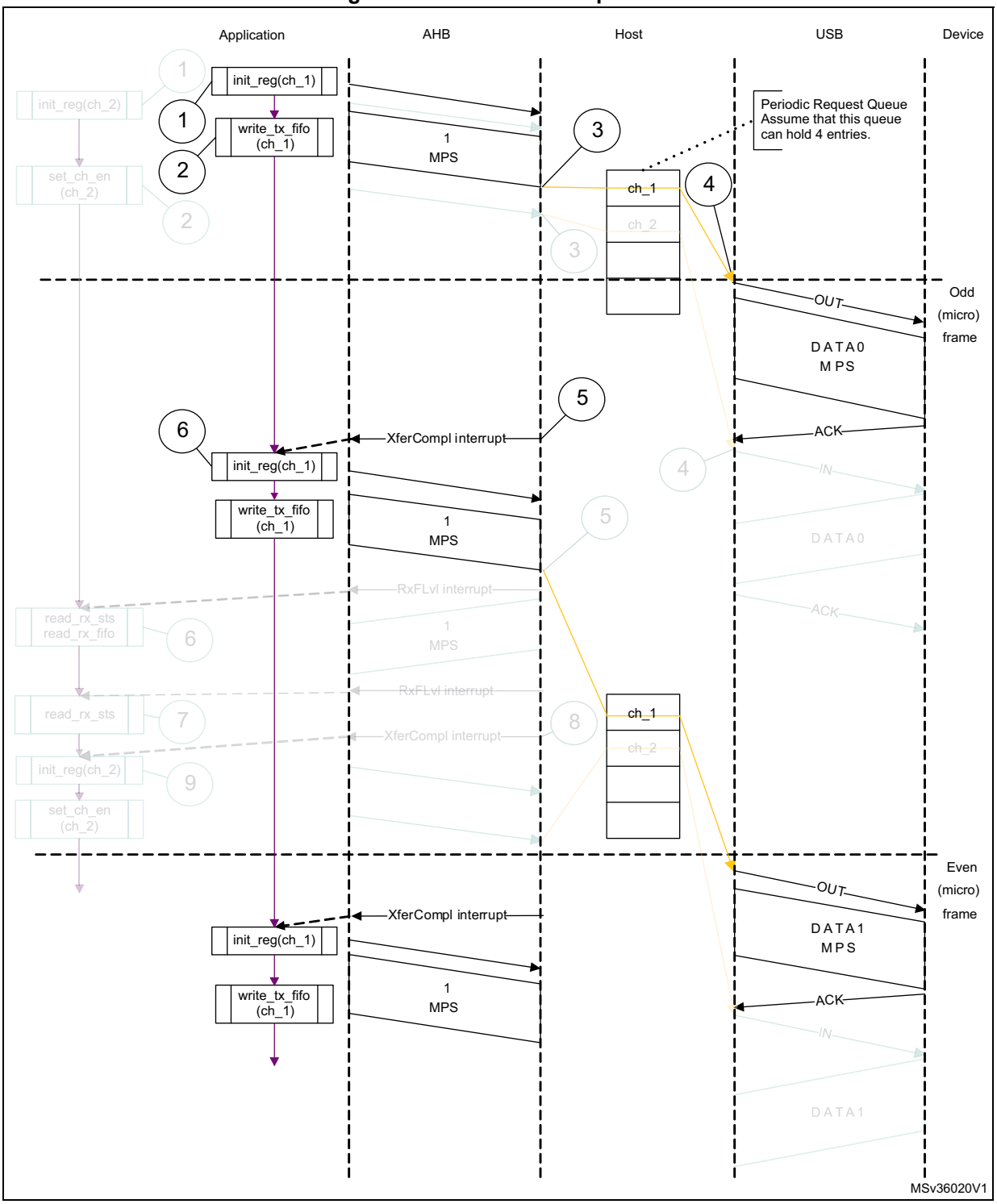

1. The grayed elements are not relevant in the context of this figure.

- **Interrupt service routine for interrupt OUT/IN transactions**

  a) Interrupt OUT

```
Unmask (NAK/TXERR/STALL/XFRC/FRMOR)
```

```
if (XFRC)
   {
   Reset Error Count
   Mask ACK
   De-allocate Channel
   }
else
   if (STALL or FRMOR)
      {
      Mask ACK
      Unmask CHH
      Disable Channel
      if (STALL)
         {
         Transfer Done = 1
         }
      }
   else
      if (NAK or TXERR)
         {
         Rewind Buffer Pointers
         Reset Error Count
         Mask ACK
         Unmask CHH
         Disable Channel
         }
      else
         if (CHH)
         {
         Mask CHH
         if (Transfer Done or (Error_count == 3))
            {
            De-allocate Channel
            }
         else
            {
            Re-initialize Channel (in next b_interval - 1 Frame)
            }
         }
      else
         if (ACK)
         {
         Reset Error Count
         Mask ACK
         }
```

```
The application uses the NPTXFE interrupt in OTG_GINTSTS to find the
transmit FIFO space.
Interrupt IN
Unmask (NAK/TXERR/XFRC/BBERR/STALL/FRMOR/DTERR)
if (XFRC)
   {
   Reset Error Count
   Mask ACK
   if (OTG_HCTSIZx.PKTCNT == 0)
      {
      De-allocate Channel
      }
   else
      {
      Transfer Done = 1
      Unmask CHH
      Disable Channel
      }
   }
else
   if (STALL or FRMOR or NAK or DTERR or BBERR)
      {
      Mask ACK
      Unmask CHH
      Disable Channel
      if (STALL or BBERR)
         {
         Reset Error Count
         Transfer Done = 1
         }
      else
         if (!FRMOR)
         {
         Reset Error Count
         }
      }
else
   if (TXERR)
      {
      Increment Error Count
      Unmask ACK
      Unmask CHH
      Disable Channel
      }
else
```

```
   if (CHH)
      {
      Mask CHH
      if (Transfer Done or (Error_count == 3))
         {
         De-allocate Channel
         }
      else
         Re-initialize Channel (in next b_interval - 1 /Frame)
      }
   }
else
   if (ACK)
      {
      Reset Error Count
      Mask ACK
      }
```

- **Interrupt IN transactions**

  The assumptions are:

  – The application is attempting to receive one packet (up to 1 maximum packet size) in every frame, starting with odd (transfer size = 1 024 bytes).

  – The receive FIFO can hold at least one maximum-packet-size packet and two status words per packet (1 031 bytes).

  – Periodic request queue depth = 4.

- **Normal interrupt IN operation**

  The sequence of operations is as follows:

1. Initialize channel 2. The application must set the ODDFRM bit in OTG_HCCHAR2.
2. Set the CHENA bit in OTG_HCCHAR2 to write an IN request to the periodic request queue.
3. The OTG_FS host writes an IN request to the periodic request queue for each OTG_HCCHAR2 register write with the CHENA bit set.
4. The OTG_FS host attempts to send an IN token in the next (odd) frame.
5. As soon as the IN packet is received and written to the receive FIFO, the OTG_FS host generates an RXFLVL interrupt.
6. In response to the RXFLVL interrupt, read the received packet status to determine the number of bytes received, then read the receive FIFO accordingly. The application must mask the RXFLVL interrupt before reading the receive FIFO, and unmask after reading the entire packet.
7. The core generates the RXFLVL interrupt for the transfer completion status entry in the receive FIFO. The application must read and ignore the receive packet status when the receive packet status is not an IN data packet (PKTSTS in GRXSTSR ≠ 0b0010).
8. The core generates an XFRC interrupt as soon as the receive packet status is read.
9. In response to the XFRC interrupt, read the PKTCNT field in OTG_HCTSIZ2. If the PKTCNT bit in OTG_HCTSIZ2 is not equal to 0, disable the channel before re-

initializing the channel for the next transfer, if any). If PKTCNT bit in OTG_HCTSIZ2 = 0, reinitialize the channel for the next transfer. This time, the application must reset the ODDFRM bit in OTG_HCCHAR2.

Figure 544. Normal interrupt IN

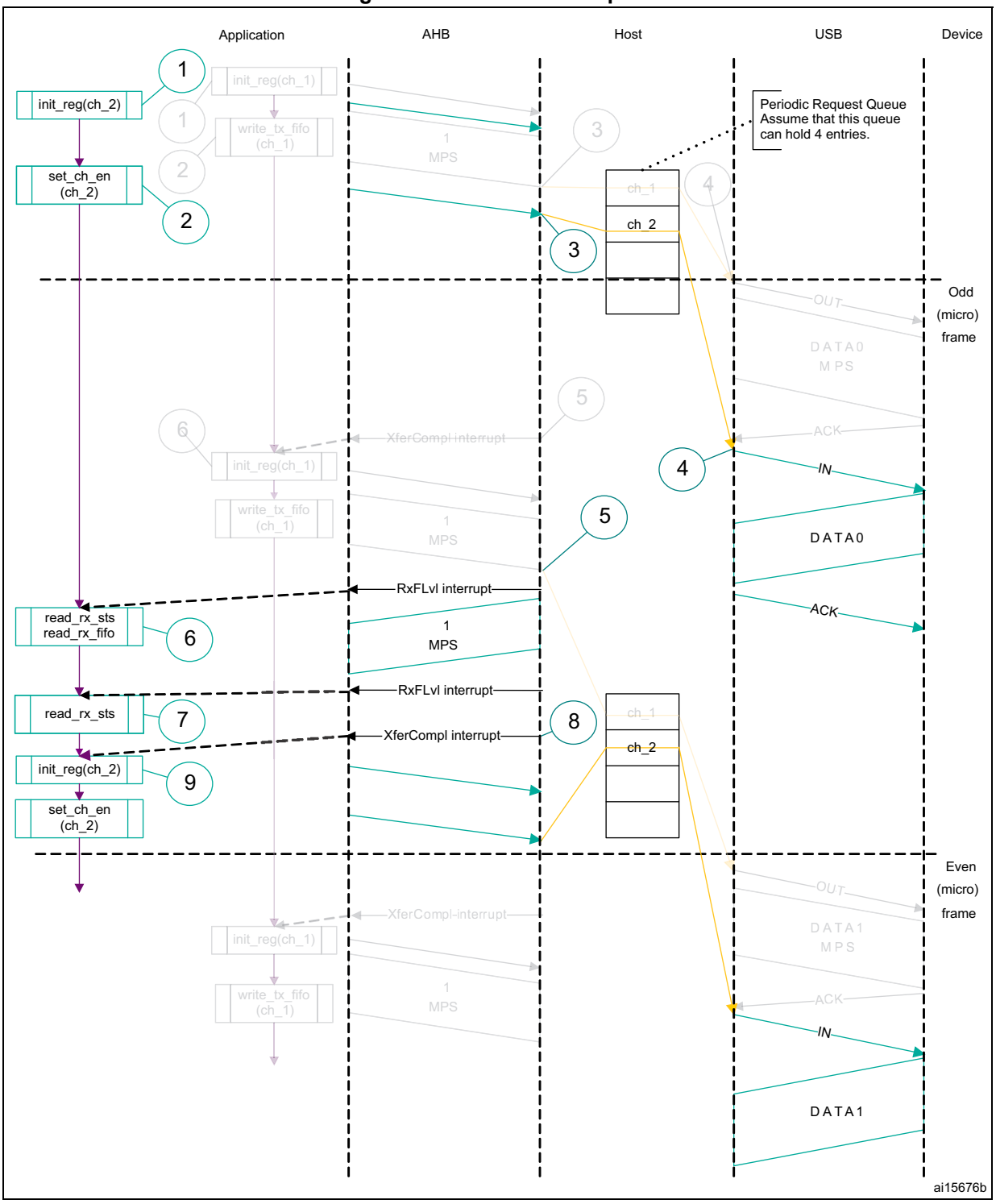

1. The grayed elements are not relevant in the context of this figure.

- **Isochronous OUT transactions**

  A typical isochronous OUT operation is shown in *Figure 544*. The assumptions are:

  – The application is attempting to send one packet every frame (up to 1 maximum

packet size), starting with an odd frame. (transfer size = 1 024 bytes).

– The periodic transmit FIFO can hold one packet (1 KB).

– Periodic request queue depth = 4.

The sequence of operations is as follows:

1. Initialize and enable channel 1. The application must set the ODDFRM bit in OTG_HCCHAR1.
2. Write the first packet for channel 1.
3. Along with the last word write of each packet, the OTG_FS host writes an entry to the periodic request queue.
4. The OTG_FS host attempts to send the OUT token in the next frame (odd).
5. The OTG_FS host generates the XFRC interrupt as soon as the last packet is transmitted successfully.
6. In response to the XFRC interrupt, reinitialize the channel for the next transfer.
7. Handling non-ACK responses

Figure 545. Isochronous OUT transactions

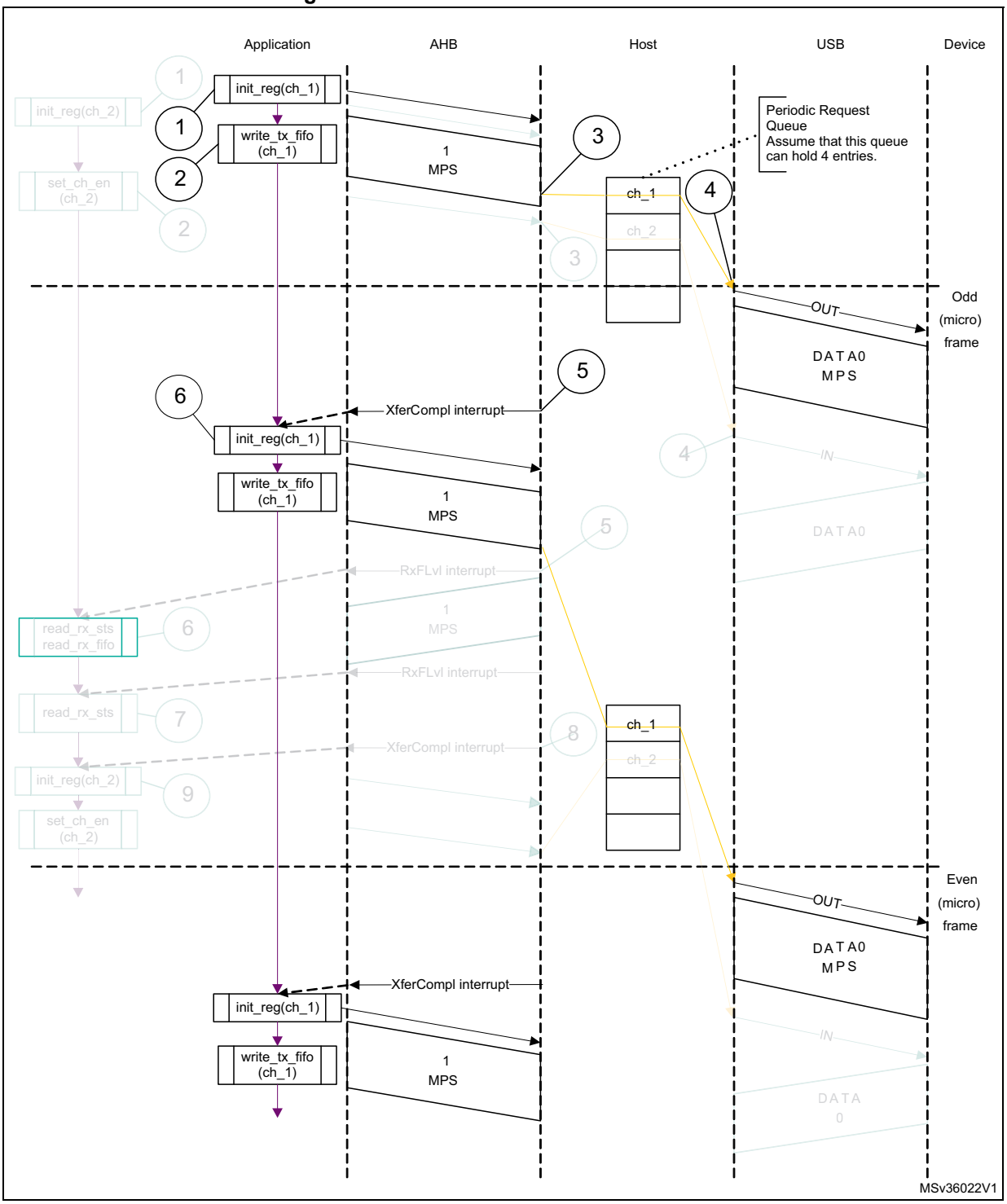

1. The grayed elements are not relevant in the context of this figure.

- **Interrupt service routine for isochronous OUT/IN transactions**

  Code sample: isochronous OUT

```
Unmask (FRMOR/XFRC)
if (XFRC)
```

```
      {
      De-allocate Channel
      }
   else
      if (FRMOR)
         {
         Unmask CHH
         Disable Channel
         }
      else
      if (CHH)
         {
         Mask CHH
         De-allocate Channel
         }
   Code sample: Isochronous IN
   Unmask (TXERR/XFRC/FRMOR/BBERR)
   if (XFRC or FRMOR)
      {
      if (XFRC and (OTG_HCTSIZx.PKTCNT == 0))
         {
         Reset Error Count
         De-allocate Channel
         }
      else
         {
         Unmask CHH
         Disable Channel
         }
      }
      else
         if (TXERR or BBERR)
            {
            Increment Error Count
            Unmask CHH
            Disable Channel
            }
         else
            if (CHH)
               {
               Mask CHH
               if (Transfer Done or (Error_count == 3))
                  {
                  De-allocate Channel
                  }
```

```
else
   {
   Re-initialize Channel
   }
}
```

- **Isochronous IN transactions**

  The assumptions are:

  – The application is attempting to receive one packet (up to 1 maximum packet size) in every frame starting with the next odd frame (transfer size = 1 024 bytes).

  – The receive FIFO can hold at least one maximum-packet-size packet and two status word per packet (1 031 bytes).

  – Periodic request queue depth = 4.

  The sequence of operations is as follows:

1. Initialize channel 2. The application must set the ODDFRM bit in OTG_HCCHAR2.
2. Set the CHENA bit in OTG_HCCHAR2 to write an IN request to the periodic request queue.
3. The OTG_FS host writes an IN request to the periodic request queue for each OTG_HCCHAR2 register write with the CHENA bit set.
4. The OTG_FS host attempts to send an IN token in the next odd frame.
5. As soon as the IN packet is received and written to the receive FIFO, the OTG_FS host generates an RXFLVL interrupt.
6. In response to the RXFLVL interrupt, read the received packet status to determine the number of bytes received, then read the receive FIFO accordingly. The application must mask the RXFLVL interrupt before reading the receive FIFO, and unmask it after reading the entire packet.
7. The core generates an RXFLVL interrupt for the transfer completion status entry in the receive FIFO. This time, the application must read and ignore the receive packet status when the receive packet status is not an IN data packet (PKTSTS bit in OTG_GRXSTSR ≠ 0b0010).
8. The core generates an XFRC interrupt as soon as the receive packet status is read.
9. In response to the XFRC interrupt, read the PKTCNT field in OTG_HCTSIZ2. If PKTCNT ≠ 0 in OTG_HCTSIZ2, disable the channel before re-initializing the channel for the next transfer, if any. If PKTCNT = 0 in OTG_HCTSIZ2, reinitialize the channel for the next transfer. This time, the application must reset the ODDFRM bit in OTG_HCCHAR2.

Figure 546. Isochronous IN transactions

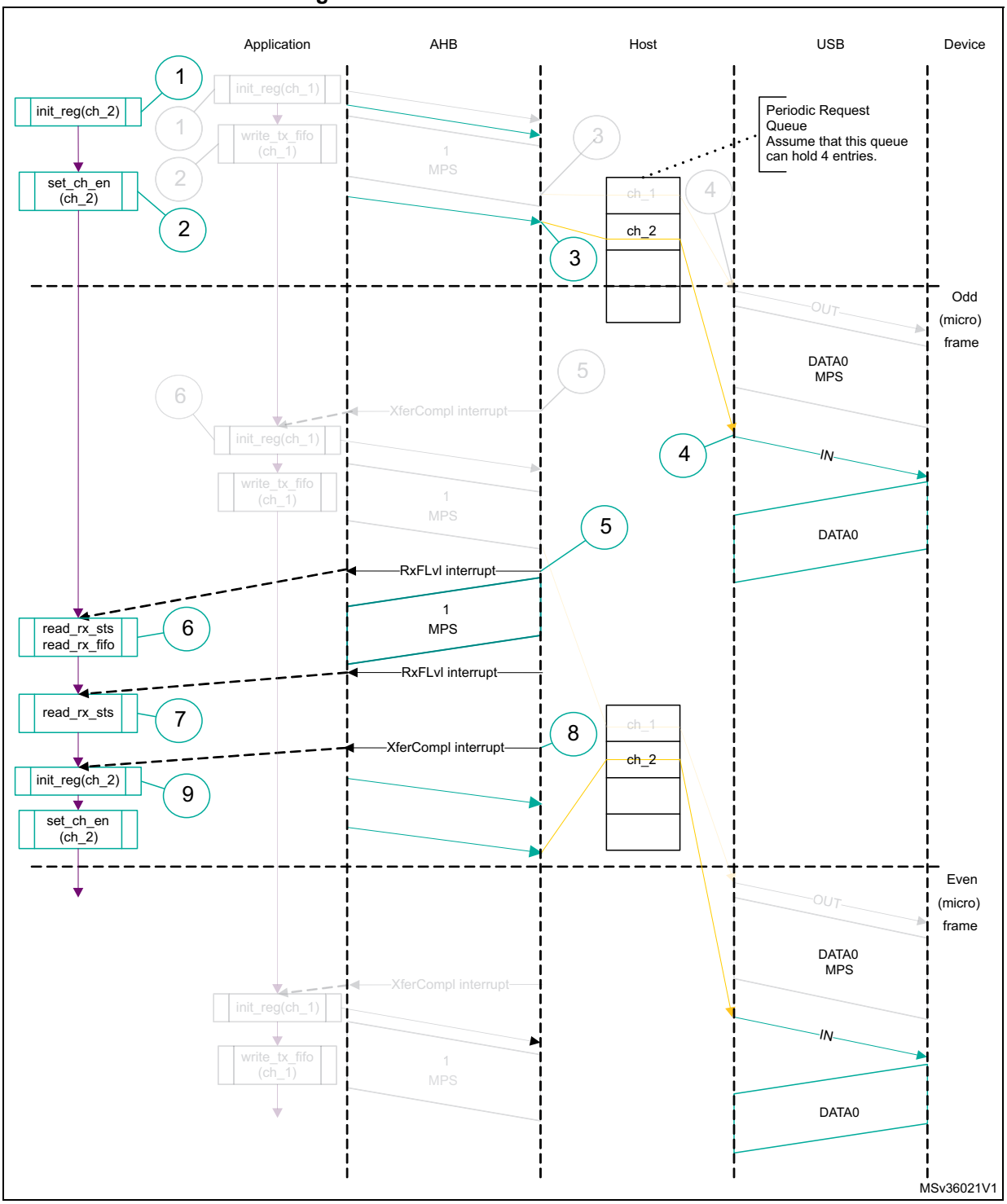

1. The grayed elements are not relevant in the context of this figure.

- **Selecting the queue depth**

  Choose the periodic and non-periodic request queue depths carefully to match the number of periodic/non-periodic endpoints accessed.

  The non-periodic request queue depth affects the performance of non-periodic

transfers. The deeper the queue (along with sufficient FIFO size), the more often the core is able to pipeline non-periodic transfers. If the queue size is small, the core is able to put in new requests only when the queue space is freed up.

The core's periodic request queue depth is critical to perform periodic transfers as scheduled. Select the periodic queue depth, based on the number of periodic transfers scheduled in a microframe. If the periodic request queue depth is smaller than the periodic transfers scheduled in a microframe, a frame overrun condition occurs.

- **Handling babble conditions**

  OTG_FS controller handles two cases of babble: packet babble and port babble. Packet babble occurs if the device sends more data than the maximum packet size for the channel. Port babble occurs if the core continues to receive data from the device at EOF2 (the end of frame 2, which is very close to SOF).

  When OTG_FS controller detects a packet babble, it stops writing data into the Rx buffer and waits for the end of packet (EOP). When it detects an EOP, it flushes already written data in the Rx buffer and generates a Babble interrupt to the application.

  When OTG_FS controller detects a port babble, it flushes the Rx FIFO and disables the port. The core then generates a port disabled interrupt (HPRTINT in OTG_GINTSTS, PENCHNG in OTG_HPRT). On receiving this interrupt, the application must determine that this is not due to an overcurrent condition (another cause of the port disabled interrupt) by checking POCA in OTG_HPRT, then perform a soft reset. The core does not send any more tokens after it has detected a port babble condition.

47.16.5 Device programming model

Endpoint initialization on USB reset

1. Set the NAK bit for all OUT endpoints
   - SNAK = 1 in OTG_DOEPCTLx (for all OUT endpoints)
2. Unmask the following interrupt bits
   - INEP0 = 1 in OTG_DAINTMSK (control 0 IN endpoint)
   - OUTEP0 = 1 in OTG_DAINTMSK (control 0 OUT endpoint)
   - STUPM = 1 in OTG_DOEPMSK
   - XFRCM = 1 in OTG_DOEPMSK
   - XFRCM = 1 in OTG_DIEPMSK
   - TOM = 1 in OTG_DIEPMSK
3. Set up the data FIFO RAM for each of the FIFOs
   - Program the OTG_GRXFSIZ register, to be able to receive control OUT data and setup data. If thresholding is not enabled, at a minimum, this must be equal to 1 max packet size of control endpoint 0 + 2 words (for the status of the control OUT data packet) + 10 words (for setup packets).
   - Program the OTG_DIEPTXF0 register (depending on the FIFO number chosen) to be able to transmit control IN data. At a minimum, this must be equal to 1 max packet size of control endpoint 0.
4. Program the following fields in the endpoint-specific registers for control OUT endpoint 0 to receive a SETUP packet
   - STUPCNT = 3 in OTG_DOEPTSIZ0 (to receive up to 3 back-to-back SETUP packets)

At this point, all initialization required to receive SETUP packets is done.

Endpoint initialization on enumeration completion

1. On the Enumeration Done interrupt (ENUMDNE in OTG_GINTSTS), read the OTG_DSTS register to determine the enumeration speed.
2. Program the MPSIZ field in OTG_DIEPCTL0 to set the maximum packet size. This step configures control endpoint 0. The maximum packet size for a control endpoint depends on the enumeration speed.

At this point, the device is ready to receive SOF packets and is configured to perform control transfers on control endpoint 0.

Endpoint initialization on SetAddress command

This section describes what the application must do when it receives a SetAddress command in a SETUP packet.

1. Program the OTG_DCFG register with the device address received in the SetAddress command
2. Program the core to send out a status IN packet

Endpoint initialization on SetConfiguration/SetInterface command

This section describes what the application must do when it receives a SetConfiguration or SetInterface command in a SETUP packet.

1. When a SetConfiguration command is received, the application must program the endpoint registers to configure them with the characteristics of the valid endpoints in the new configuration.
2. When a SetInterface command is received, the application must program the endpoint registers of the endpoints affected by this command.
3. Some endpoints that were active in the prior configuration or alternate setting are not valid in the new configuration or alternate setting. These invalid endpoints must be deactivated.
4. Unmask the interrupt for each active endpoint and mask the interrupts for all inactive endpoints in the OTG_DAINTMSK register.
5. Set up the data FIFO RAM for each FIFO.
6. After all required endpoints are configured; the application must program the core to send a status IN packet.

At this point, the device core is configured to receive and transmit any type of data packet.

Endpoint activation

This section describes the steps required to activate a device endpoint or to configure an existing device endpoint to a new type.

1. Program the characteristics of the required endpoint into the following fields of the OTG_DIEPCTLx register (for IN or bidirectional endpoints) or the OTG_DOEPCTLx register (for OUT or bidirectional endpoints).
   - Maximum packet size
   - USB active endpoint = 1
   - Endpoint start data toggle (for interrupt and bulk endpoints)
   - Endpoint type
   - Tx FIFO number
2. Once the endpoint is activated, the core starts decoding the tokens addressed to that endpoint and sends out a valid handshake for each valid token received for the endpoint.

Endpoint deactivation

This section describes the steps required to deactivate an existing endpoint.

1. In the endpoint to be deactivated, clear the USB active endpoint bit in the OTG_DIEPCTLx register (for IN or bidirectional endpoints) or the OTG_DOEPCTLx register (for OUT or bidirectional endpoints).
2. Once the endpoint is deactivated, the core ignores tokens addressed to that endpoint, which results in a timeout on the USB.

Note: The application must meet the following conditions to set up the device core to handle traffic:
NPTXFEM and RXFLVLM in the OTG_GINTMSK register must be cleared.

Operational model

SETUP and OUT data transfers:

This section describes the internal data flow and application-level operations during data OUT transfers and SETUP transactions.

- **Packet read**

This section describes how to read packets (OUT data and SETUP packets) from the receive FIFO.

1. On catching an RXFLVL interrupt (OTG_GINTSTS register), the application must read the receive status pop register (OTG_GRXSTSP).
2. The application can mask the RXFLVL interrupt (in OTG_GINTSTS) by writing to RXFLVLM = 0 (in OTG_GINTMSK), until it has read the packet from the receive FIFO.
3. If the received packet's byte count is not 0, the byte count amount of data is popped from the receive data FIFO and stored in memory. If the received packet byte count is 0, no data is popped from the receive data FIFO.
4. The receive status readout of the packet of FIFO indicates one of the following:
   a) Global OUT NAK pattern:
      PKTSTS = Global OUT NAK, BCNT = 0x000, EPNUM = (0x0),
      DPID = (0b00).
      These data indicate that the global OUT NAK bit has taken effect.
   b) SETUP packet pattern:
      PKTSTS = SETUP, BCNT = 0x008, EPNUM = Control EP Num,

DPID = DATA0. These data indicate that a SETUP packet for the specified endpoint is now available for reading from the receive FIFO.

c) Setup stage done pattern:
PKTSTS = Setup Stage Done, BCNT = 0x0, EPNUM = Control EP Num, DPID = (0b00).
These data indicate that the setup stage for the specified endpoint has completed and the data stage has started. After this entry is popped from the receive FIFO, the core asserts a setup interrupt on the specified control OUT endpoint.

d) Data OUT packet pattern:
PKTSTS = DataOUT, BCNT = size of the received data OUT packet (0 ≤ BCNT ≤ 1 024), EPNUM = EPNUM on which the packet was received, DPID = Actual Data PID.

e) Data transfer completed pattern:
PKTSTS = Data OUT transfer done, BCNT = 0x0, EPNUM = OUT EP Num on which the data transfer is complete, DPID = (0b00).
These data indicate that an OUT data transfer for the specified OUT endpoint has completed. After this entry is popped from the receive FIFO, the core asserts a transfer completed interrupt on the specified OUT endpoint.

5. After the data payload is popped from the receive FIFO, the RXFLVL interrupt (OTG_GINTSTS) must be unmasked.
6. Steps 1–5 are repeated every time the application detects assertion of the interrupt line due to RXFLVL in OTG_GINTSTS. Reading an empty receive FIFO can result in undefined core behavior.

Figure 547 provides a flowchart of the above procedure.

Figure 547. Receive FIFO packet read

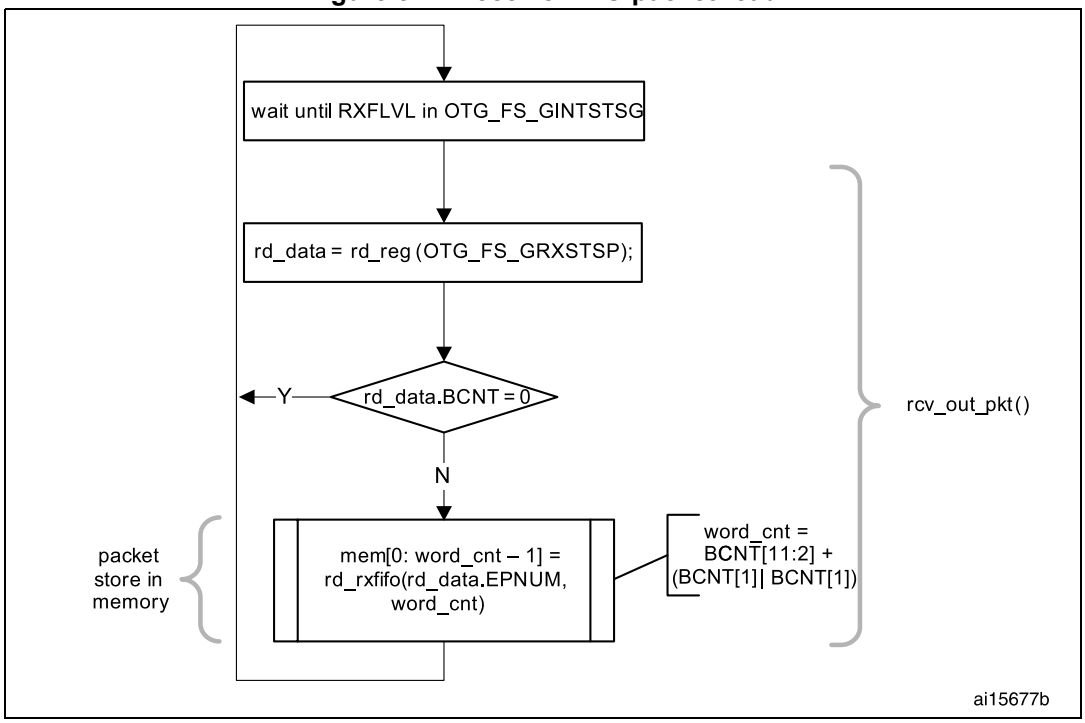

SETUP transactions

This section describes how the core handles SETUP packets and the application's sequence for handling SETUP transactions.

- **Application requirements**

1. To receive a SETUP packet, the STUPCNT field (OTG_DOEPTSIZx) in a control OUT endpoint must be programmed to a non-zero value. When the application programs the STUPCNT field to a non-zero value, the core receives SETUP packets and writes them to the receive FIFO, irrespective of the NAK status and EPENA bit setting in OTG_DOEPCTLx. The STUPCNT field is decremented every time the control endpoint receives a SETUP packet. If the STUPCNT field is not programmed to a proper value before receiving a SETUP packet, the core still receives the SETUP packet and decrements the STUPCNT field, but the application may not be able to determine the correct number of SETUP packets received in the setup stage of a control transfer.
   - STUPCNT = 3 in OTG_DOEPTSIZx
2. The application must always allocate some extra space in the receive data FIFO, to be able to receive up to three SETUP packets on a control endpoint.
   - The space to be reserved is 10 words. Three words are required for the first SETUP packet, 1 word is required for the setup stage done word and 6 words are required to store two extra SETUP packets among all control endpoints.
   - 3 words per SETUP packet are required to store 8 bytes of SETUP data and 4 bytes of SETUP status (setup packet pattern). The core reserves this space in the receive data FIFO to write SETUP data only, and never uses this space for data packets.
3. The application must read the 2 words of the SETUP packet from the receive FIFO.
4. The application must read and discard the setup stage done word from the receive FIFO.

- **Internal data flow**

1. When a SETUP packet is received, the core writes the received data to the receive FIFO, without checking for available space in the receive FIFO and irrespective of the endpoint's NAK and STALL bit settings.
   - The core internally sets the IN NAK and OUT NAK bits for the control IN/OUT endpoints on which the SETUP packet was received.
2. For every SETUP packet received on the USB, 3 words of data are written to the receive FIFO, and the STUPCNT field is decremented by 1.
   - The first word contains control information used internally by the core
   - The second word contains the first 4 bytes of the SETUP command
   - The third word contains the last 4 bytes of the SETUP command
3. When the setup stage changes to a data IN/OUT stage, the core writes an entry (setup stage done word) to the receive FIFO, indicating the completion of the setup stage.
4. On the AHB side, SETUP packets are emptied by the application.
5. When the application pops the setup stage done word from the receive FIFO, the core interrupts the application with an STUP interrupt (OTG_DOEPINTx), indicating it can process the received SETUP packet.
6. The core clears the endpoint enable bit for control OUT endpoints.

- **Application programming sequence**

1. Program the OTG_DOEPTSIZx register.
   – STUPCNT = 3
2. Wait for the RXFLVL interrupt (OTG_GINTSTS) and empty the data packets from the receive FIFO.
3. Assertion of the STUP interrupt (OTG_DOEPINTx) marks a successful completion of the SETUP data transfer.
   – On this interrupt, the application must read the OTG_DOEPTSIZx register to determine the number of SETUP packets received and process the last received SETUP packet.

Figure 548. Processing a SETUP packet

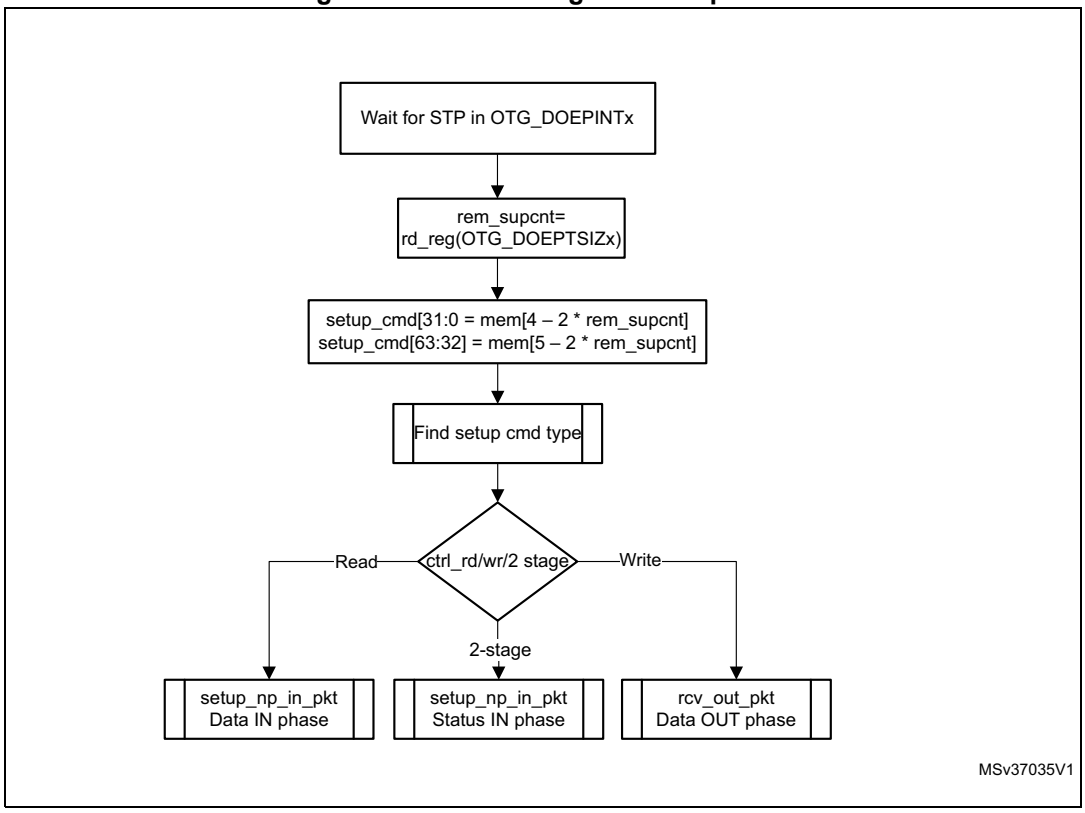

- **Handling more than three back-to-back SETUP packets**

Per the USB 2.0 specification, normally, during a SETUP packet error, a host does not send more than three back-to-back SETUP packets to the same endpoint. However, the USB 2.0 specification does not limit the number of back-to-back SETUP packets a host can send to the same endpoint. When this condition occurs, the OTG_FS controller generates an interrupt (B2BSTUP in OTG_DOEPINTx).

- **Setting the global OUT NAK**

Internal data flow:

1. When the application sets the Global OUT NAK (SGONAK bit in OTG_DCTL), the core stops writing data, except SETUP packets, to the receive FIFO. Irrespective of the

space availability in the receive FIFO, non-isochronous OUT tokens receive a NAK handshake response, and the core ignores isochronous OUT data packets

2. The core writes the Global OUT NAK pattern to the receive FIFO. The application must reserve enough receive FIFO space to write this data pattern.
3. When the application pops the Global OUT NAK pattern word from the receive FIFO, the core sets the GONAKEFF interrupt (OTG_GINTSTS).
4. Once the application detects this interrupt, it can assume that the core is in Global OUT NAK mode. The application can clear this interrupt by clearing the SGONAK bit in OTG_DCTL.

Application programming sequence:

1. To stop receiving any kind of data in the receive FIFO, the application must set the Global OUT NAK bit by programming the following field:
   – SGONAK = 1 in OTG_DCTL
2. Wait for the assertion of the GONAKEFF interrupt in OTG_GINTSTS. When asserted, this interrupt indicates that the core has stopped receiving any type of data except SETUP packets.
3. The application can receive valid OUT packets after it has set SGONAK in OTG_DCTL and before the core asserts the GONAKEFF interrupt (OTG_GINTSTS).
4. The application can temporarily mask this interrupt by writing to the GONAKEFFM bit in the OTG_GINTMSK register.
   – GONAKEFFM = 0 in the OTG_GINTMSK register
5. Whenever the application is ready to exit the Global OUT NAK mode, it must clear the SGONAK bit in OTG_DCTL. This also clears the GONAKEFF interrupt (OTG_GINTSTS).
   – CGONAK = 1 in OTG_DCTL
6. If the application has masked this interrupt earlier, it must be unmasked as follows:
   – GONAKEFFM = 1 in OTG_GINTMSK

- **Disabling an OUT endpoint**

The application must use this sequence to disable an OUT endpoint that it has enabled.

Application programming sequence:

1. Before disabling any OUT endpoint, the application must enable Global OUT NAK mode in the core.
   – SGONAK = 1 in OTG_DCTL
2. Wait for the GONAKEFF interrupt (OTG_GINTSTS)
3. Disable the required OUT endpoint by programming the following fields:
   – EPDIS = 1 in OTG_DOEPCTLx
   – SNAK = 1 in OTG_DOEPCTLx
4. Wait for the EPDISD interrupt (OTG_DOEPINTx), which indicates that the OUT endpoint is completely disabled. When the EPDISD interrupt is asserted, the core also clears the following bits:
   – EPDIS = 0 in OTG_DOEPCTLx
   – EPENA = 0 in OTG_DOEPCTLx
5. The application must clear the Global OUT NAK bit to start receiving data from other non-disabled OUT endpoints.
   – SGONAK = 0 in OTG_DCTL

- **Transfer Stop Programming for OUT endpoints**

The application must use the following programing sequence to stop any transfers (because of an interrupt from the host, typically a reset).

Sequence of operations:

1. Enable all OUT endpoints by setting
   – EPENA = 1 in all N/A_DOEPCTLx registers.
2. Flush the RxFIFO as follows
   – Poll N/A_GRSTCTL.AHBIDL until it is 1. This indicates that AHB master is idle.
   – Perform read modify write operation on N/A_GRSTCTL.RXFFLSH =1
   – Poll N/A_GRSTCTL.RXFFLSH until it is 0, but also using a timeout of less than 10 milli-seconds (corresponds to minimum reset signaling duration). If 0 is seen before the timeout, then the RxFIFO flush is successful. If at the moment the timeout occurs, there is still a 1, (this may be due to a packet on EP0 coming from the host) then go back (once only) to the previous step (“Perform read modify write operation”).
3. Before disabling any OUT endpoint, the application must enable Global OUT NAK mode in the core, according to the instructions in “*Setting the global OUT NAK on page 1810*”. This ensures that data in the RxFIFO is sent to the application successfully. Set SGONAK = 1 in N/A_DCTL
4. Wait for the GONAKEFF interrupt (N/A_GINTSTS)
5. Disable all active OUT endpoints by programming the following register bits:
   – EPDIS = 1 in registers N/A_DOEPCTLx
   – SNAK = 1 in registers N/A_DOEPCTLx
6. Wait for the EPDIS interrupt in N/A_DOEPINTx for each OUT endpoint programmed in the previous step. The EPDIS interrupt in N/A_DOEPINTx indicates that the

corresponding OUT endpoint is completely disabled. When the EPDIS interrupt is asserted, the following bits are cleared:

– EPENA = 0 in registers N/A_DOEPCTLx
– EPDIS = 0 in registers N/A_DOEPCTLx
– SNAK = 0 in registers N/A_DOEPCTLx

- **Generic non-isochronous OUT data transfers**

This section describes a regular non-isochronous OUT data transfer (control, bulk, or interrupt).

Application requirements:

1. Before setting up an OUT transfer, the application must allocate a buffer in the memory to accommodate all data to be received as part of the OUT transfer.
2. For OUT transfers, the transfer size field in the endpoint's transfer size register must be a multiple of the maximum packet size of the endpoint, adjusted to the word boundary.
   – transfer size[EPNUM] = n × (MPSIZ[EPNUM] + 4 – (MPSIZ[EPNUM] mod 4))
   – packet count[EPNUM] = n
   – $n > 0$
3. On any OUT endpoint interrupt, the application must read the endpoint's transfer size register to calculate the size of the payload in the memory. The received payload size can be less than the programmed transfer size.
   – Payload size in memory = application programmed initial transfer size – core updated final transfer size
   – Number of USB packets in which this payload was received = application programmed initial packet count – core updated final packet count

Internal data flow:

1. The application must set the transfer size and packet count fields in the endpoint-specific registers, clear the NAK bit, and enable the endpoint to receive the data.
2. Once the NAK bit is cleared, the core starts receiving data and writes it to the receive FIFO, as long as there is space in the receive FIFO. For every data packet received on the USB, the data packet and its status are written to the receive FIFO. Every packet (maximum packet size or short packet) written to the receive FIFO decrements the packet count field for that endpoint by 1.
   – OUT data packets received with bad data CRC are flushed from the receive FIFO automatically.
   – After sending an ACK for the packet on the USB, the core discards non-isochronous OUT data packets that the host, which cannot detect the ACK, re-sends. The application does not detect multiple back-to-back data OUT packets on the same endpoint with the same data PID. In this case the packet count is not decremented.
   – If there is no space in the receive FIFO, isochronous or non-isochronous data packets are ignored and not written to the receive FIFO. Additionally, non-isochronous OUT tokens receive a NAK handshake reply.
   – In all the above three cases, the packet count is not decremented because no data are written to the receive FIFO.

3. When the packet count becomes 0 or when a short packet is received on the endpoint, the NAK bit for that endpoint is set. Once the NAK bit is set, the isochronous or non-isochronous data packets are ignored and not written to the receive FIFO, and non-isochronous OUT tokens receive a NAK handshake reply.
4. After the data are written to the receive FIFO, the application reads the data from the receive FIFO and writes it to external memory, one packet at a time per endpoint.
5. At the end of every packet write on the AHB to external memory, the transfer size for the endpoint is decremented by the size of the written packet.
6. The OUT data transfer completed pattern for an OUT endpoint is written to the receive FIFO on one of the following conditions:
   – The transfer size is 0 and the packet count is 0
   – The last OUT data packet written to the receive FIFO is a short packet (0 ≤ packet size < maximum packet size)
7. When either the application pops this entry (OUT data transfer completed), a transfer completed interrupt is generated for the endpoint and the endpoint enable is cleared.

Application programming sequence:

1. Program the OTG_DOEPTSIZx register for the transfer size and the corresponding packet count.
2. Program the OTG_DOEPCTLx register with the endpoint characteristics, and set the EPENA and CNAK bits.
   – EPENA = 1 in OTG_DOEPCTLx
   – CNAK = 1 in OTG_DOEPCTLx
3. Wait for the RXFLVL interrupt (in OTG_GINTSTS) and empty the data packets from the receive FIFO.
   – This step can be repeated many times, depending on the transfer size.
4. Asserting the XFRC interrupt (OTG_DOEPINTx) marks a successful completion of the non-isochronous OUT data transfer.
5. Read the OTG_DOEPTSIZx register to determine the size of the received data payload.

- **Generic isochronous OUT data transfer**

This section describes a regular isochronous OUT data transfer.

Application requirements:

1. All the application requirements for non-isochronous OUT data transfers also apply to isochronous OUT data transfers.
2. For isochronous OUT data transfers, the transfer size and packet count fields must always be set to the number of maximum-packet-size packets that can be received in a single frame and no more. Isochronous OUT data transfers cannot span more than 1 frame.
3. The application must read all isochronous OUT data packets from the receive FIFO (data and status) before the end of the periodic frame (EOPF interrupt in OTG_GINTSTS).
4. To receive data in the following frame, an isochronous OUT endpoint must be enabled after the EOPF (OTG_GINTSTS) and before the SOF (OTG_GINTSTS).

Internal data flow:

1. The internal data flow for isochronous OUT endpoints is the same as that for non-isochronous OUT endpoints, but for a few differences.
2. When an isochronous OUT endpoint is enabled by setting the endpoint enable and clearing the NAK bits, the Even/Odd frame bit must also be set appropriately. The core receives data on an isochronous OUT endpoint in a particular frame only if the following condition is met:
   – EONUM (in OTG_DOEPCTLx) = FNSOF[0] (in OTG_DSTS)
3. When the application completely reads an isochronous OUT data packet (data and status) from the receive FIFO, the core updates the RXDPID field in OTG_DOEPTSIZx with the data PID of the last isochronous OUT data packet read from the receive FIFO.

Application programming sequence:

1. Program the OTG_DOEPTSIZx register for the transfer size and the corresponding packet count
2. Program the OTG_DOEPCTLx register with the endpoint characteristics and set the endpoint enable, ClearNAK, and Even/Odd frame bits.
   – EPENA = 1
   – CNAK = 1
   – EONUM = (0: Even/1: Odd)
3. Wait for the RXFLVL interrupt (in OTG_GINTSTS) and empty the data packets from the receive FIFO
   – This step can be repeated many times, depending on the transfer size.
4. The assertion of the XFRC interrupt (in OTG_DOEPINTx) marks the completion of the isochronous OUT data transfer. This interrupt does not necessarily mean that the data in memory are good.
5. This interrupt cannot always be detected for isochronous OUT transfers. Instead, the application can detect the INCOMPISOOUT interrupt in OTG_GINTSTS.
6. Read the OTG_DOEPTSIZx register to determine the size of the received transfer and to determine the validity of the data received in the frame. The application must treat the data received in memory as valid only if one of the following conditions is met:
   – RXDPID = DATA0 (in OTG_DOEPTSIZx) and the number of USB packets in which this payload was received = 1
   – RXDPID = DATA1 (in OTG_DOEPTSIZx) and the number of USB packets in which this payload was received = 2

     The number of USB packets in which this payload was received = Application programmed initial packet count – core updated final packet count

   The application can discard invalid data packets.

- **Incomplete isochronous OUT data transfers**

This section describes the application programming sequence when isochronous OUT data packets are dropped inside the core.

Internal data flow:

1. For isochronous OUT endpoints, the XFRC interrupt (in OTG_DOEPINTx) may not always be asserted. If the core drops isochronous OUT data packets, the application

could fail to detect the XFRC interrupt (OTG_DOEPINTx) under the following circumstances:

- When the receive FIFO cannot accommodate the complete ISO OUT data packet, the core drops the received ISO OUT data
- When the isochronous OUT data packet is received with CRC errors
- When the isochronous OUT token received by the core is corrupted
- When the application is very slow in reading the data from the receive FIFO

2. When the core detects an end of periodic frame before transfer completion to all isochronous OUT endpoints, it asserts the incomplete isochronous OUT data interrupt (INCOMPISOOUT in OTG_GINTSTS), indicating that an XFRC interrupt (in OTG_DOEPINTx) is not asserted on at least one of the isochronous OUT endpoints. At this point, the endpoint with the incomplete transfer remains enabled, but no active transfers remain in progress on this endpoint on the USB.

Application programming sequence:

1. Asserting the INCOMPISOOUT interrupt (OTG_GINTSTS) indicates that in the current frame, at least one isochronous OUT endpoint has an incomplete transfer.
2. If this occurs because isochronous OUT data is not completely emptied from the endpoint, the application must ensure that the application empties all isochronous OUT data (data and status) from the receive FIFO before proceeding.
   - When all data are emptied from the receive FIFO, the application can detect the XFRC interrupt (OTG_DOEPINTx). In this case, the application must re-enable the endpoint to receive isochronous OUT data in the next frame.
3. When it receives an INCOMPISOOUT interrupt (in OTG_GINTSTS), the application must read the control registers of all isochronous OUT endpoints (OTG_DOEPCTLx) to determine which endpoints had an incomplete transfer in the current microframe. An endpoint transfer is incomplete if both the following conditions are met:
   - EONUM bit (in OTG_DOEPCTLx) = FNSOF[0] (in OTG_DSTS)
   - EPENA = 1 (in OTG_DOEPCTLx)
4. The previous step must be performed before the SOF interrupt (in OTG_GINTSTS) is detected, to ensure that the current frame number is not changed.
5. For isochronous OUT endpoints with incomplete transfers, the application must discard the data in the memory and disable the endpoint by setting the EPDIS bit in OTG_DOEPCTLx.
6. Wait for the EPDISD interrupt (in OTG_DOEPINTx) and enable the endpoint to receive new data in the next frame.
   - Because the core can take some time to disable the endpoint, the application may not be able to receive the data in the next frame after receiving bad isochronous data.

- **Stalling a non-isochronous OUT endpoint**

This section describes how the application can stall a non-isochronous endpoint.

1. Put the core in the Global OUT NAK mode.
2. Disable the required endpoint
   – When disabling the endpoint, instead of setting the SNAK bit in OTG_DOEPCTL, set STALL = 1 (in OTG_DOEPCTL).

     The STALL bit always takes precedence over the NAK bit.
3. When the application is ready to end the STALL handshake for the endpoint, the STALL bit (in OTG_DOEPCTLx) must be cleared.
4. If the application is setting or clearing a STALL for an endpoint due to a SetFeature.Endpoint Halt or ClearFeature.Endpoint Halt command, the STALL bit must be set or cleared before the application sets up the status stage transfer on the control endpoint.

Examples

This section describes and depicts some fundamental transfer types and scenarios.

- Bulk OUT transaction

Figure 549 depicts the reception of a single Bulk OUT data packet from the USB to the AHB and describes the events involved in the process.

Figure 549. Bulk OUT transaction

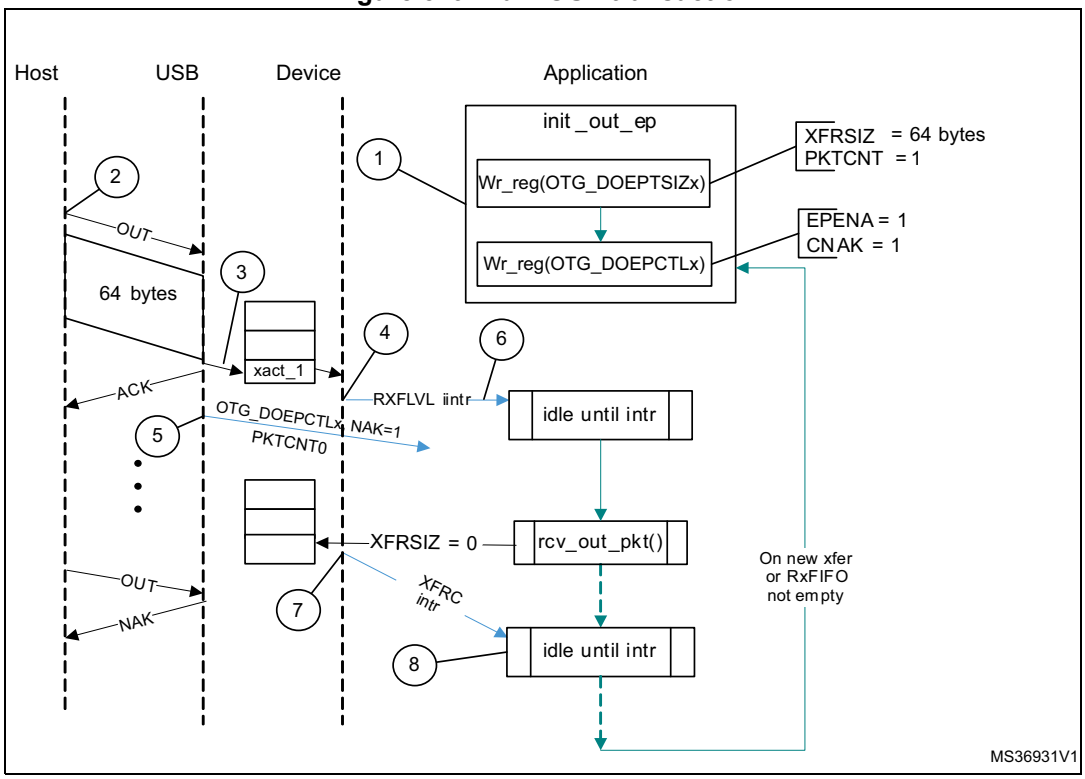

After a SetConfiguration/SetInterface command, the application initializes all OUT endpoints by setting CNAK = 1 and EPENA = 1 (in OTG_DOEPCTLx), and setting a suitable XFRSIZ and PKTCNT in the OTG_DOEPTSIZx register.

1. host attempts to send data (OUT token) to an endpoint.
2. When the core receives the OUT token on the USB, it stores the packet in the Rx FIFO because space is available there.
3. After writing the complete packet in the Rx FIFO, the core then asserts the RXFLVL interrupt (in OTG_GINTSTS).
4. On receiving the PKTCNT number of USB packets, the core internally sets the NAK bit for this endpoint to prevent it from receiving any more packets.
5. The application processes the interrupt and reads the data from the Rx FIFO.
6. When the application has read all the data (equivalent to XFRSIZ), the core generates an XFRC interrupt (in OTG_DOEPINTx).
7. The application processes the interrupt and uses the setting of the XFRC interrupt bit (in OTG_DOEPINTx) to determine that the intended transfer is complete.

IN data transfers

- **Packet write**

This section describes how the application writes data packets to the endpoint FIFO when dedicated transmit FIFOs are enabled.

1. The application can either choose the polling or the interrupt mode.
   - In polling mode, the application monitors the status of the endpoint transmit data FIFO by reading the OTG_DTXFSTSx register, to determine if there is enough space in the data FIFO.
   - In interrupt mode, the application waits for the TXFE interrupt (in OTG_DIEPINTx) and then reads the OTG_DTXFSTSx register, to determine if there is enough space in the data FIFO.
   - To write a single non-zero length data packet, there must be space to write the entire packet in the data FIFO.
   - To write zero length packet, the application must not look at the FIFO space.
2. Using one of the above mentioned methods, when the application determines that there is enough space to write a transmit packet, the application must first write into the endpoint control register, before writing the data into the data FIFO. Typically, the application, must do a read modify write on the OTG_DIEPCTLx register to avoid modifying the contents of the register, except for setting the endpoint enable bit.

The application can write multiple packets for the same endpoint into the transmit FIFO, if space is available. For periodic IN endpoints, the application must write packets only for one microframe. It can write packets for the next periodic transaction only after getting transfer complete for the previous transaction.

- **Setting IN endpoint NAK**

Internal data flow:

1. When the application sets the IN NAK for a particular endpoint, the core stops transmitting data on the endpoint, irrespective of data availability in the endpoint's transmit FIFO.
2. Non-isochronous IN tokens receive a NAK handshake reply
   – Isochronous IN tokens receive a zero-data-length packet reply
3. The core asserts the INEPNE (IN endpoint NAK effective) interrupt in OTG_DIEPINTx in response to the SNAK bit in OTG_DIEPCTLx.
4. Once this interrupt is seen by the application, the application can assume that the endpoint is in IN NAK mode. This interrupt can be cleared by the application by setting the CNAK bit in OTG_DIEPCTLx.

Application programming sequence:

1. To stop transmitting any data on a particular IN endpoint, the application must set the IN NAK bit. To set this bit, the following field must be programmed.
   – SNAK = 1 in OTG_DIEPCTLx
2. Wait for assertion of the INEPNE interrupt in OTG_DIEPINTx. This interrupt indicates that the core has stopped transmitting data on the endpoint.
3. The core can transmit valid IN data on the endpoint after the application has set the NAK bit, but before the assertion of the NAK Effective interrupt.
4. The application can mask this interrupt temporarily by writing to the INEPNEM bit in OTG_DIEPMSK.
   – INEPNEM = 0 in OTG_DIEPMSK
5. To exit endpoint NAK mode, the application must clear the NAK status bit (NAKSTS) in OTG_DIEPCTLx. This also clears the INEPNE interrupt (in OTG_DIEPINTx).
   – CNAK = 1 in OTG_DIEPCTLx
6. If the application masked this interrupt earlier, it must be unmasked as follows:
   – INEPNEM = 1 in OTG_DIEPMSK

- **IN endpoint disable**

Use the following sequence to disable a specific IN endpoint that has been previously enabled.

Application programming sequence:

1. The application must stop writing data on the AHB for the IN endpoint to be disabled.
2. The application must set the endpoint in NAK mode.
   – SNAK = 1 in OTG_DIEPCTLx
3. Wait for the INEPNE interrupt in OTG_DIEPINTx.
4. Set the following bits in the OTG_DIEPCTLx register for the endpoint that must be disabled.
   – EPDIS = 1 in OTG_DIEPCTLx
   – SNAK = 1 in OTG_DIEPCTLx
5. Assertion of the EPDISD interrupt in OTG_DIEPINTx indicates that the core has completely disabled the specified endpoint. Along with the assertion of the interrupt, the core also clears the following bits:
   – EPENA = 0 in OTG_DIEPCTLx
   – EPDIS = 0 in OTG_DIEPCTLx
6. The application must read the OTG_DIEPTSIZx register for the periodic IN EP, to calculate how much data on the endpoint were transmitted on the USB.
7. The application must flush the data in the endpoint transmit FIFO, by setting the following fields in the OTG_GRSTCTL register:
   – TXFNUM (in OTG_GRSTCTL) = Endpoint transmit FIFO number
   – TXFFLSH in (OTG_GRSTCTL) = 1

The application must poll the OTG_GRSTCTL register, until the TXFFLSH bit is cleared by the core, which indicates the end of flush operation. To transmit new data on this endpoint, the application can re-enable the endpoint at a later point.

- **Transfer Stop Programming for IN endpoints**

The application must use the following programing sequence to stop any transfers (because of an interrupt from the host, typically a reset).

Sequence of operations:

1. Disable the IN endpoint by setting:
   – EPDIS = 1 in all N/A_DIEPCTLx registers
2. Wait for the EPDIS interrupt in N/A_DIEPINTx, which indicates that the IN endpoint is completely disabled. When the EPDIS interrupt is asserted the following bits are cleared:
   – EPDIS = 0 in N/A_DIEPCTLx
   – EPENA = 0 in N/A_DIEPCTLx
3. Flush the TxFIFO by programming the following bits:
   – TXFFLSH = 1 in N/A_GRSTCTL
   – TXFNUM = “FIFO number specific to endpoint” in N/A_GRSTCTL
4. The application can start polling till TXFFLSH in N/A_GRSTCTL is cleared. When this bit is cleared, it ensures that there is no data left in the Tx FIFO.

- **Generic non-periodic IN data transfers**

Application requirements:

1. Before setting up an IN transfer, the application must ensure that all data to be transmitted as part of the IN transfer are part of a single buffer.
2. For IN transfers, the transfer size field in the endpoint transfer size register denotes a payload that constitutes multiple maximum-packet-size packets and a single short packet. This short packet is transmitted at the end of the transfer.
   - To transmit a few maximum-packet-size packets and a short packet at the end of the transfer:

     Transfer size[EPNUM] = *x* × MPSIZ[EPNUM] + sp

     If (sp > 0), then packet count[EPNUM] = x + 1.
     Otherwise, packet count[EPNUM] = *x*
   - To transmit a single zero-length data packet:

     Transfer size[EPNUM] = 0

     Packet count[EPNUM] = 1
   - To transmit a few maximum-packet-size packets and a zero-length data packet at the end of the transfer, the application must split the transfer into two parts. The first sends maximum-packet-size data packets and the second sends the zero-length data packet alone.

     First transfer: transfer size[EPNUM] = *x* × MPSIZ[epnum]; packet count = *n*;

     Second transfer: transfer size[EPNUM] = 0; packet count = 1;
3. Once an endpoint is enabled for data transfers, the core updates the transfer size register. At the end of the IN transfer, the application must read the transfer size register to determine how much data posted in the transmit FIFO have already been sent on the USB.
4. Data fetched into transmit FIFO = Application-programmed initial transfer size – core-updated final transfer size
   - Data transmitted on USB = (application-programmed initial packet count – core updated final packet count) × MPSIZ[EPNUM]
   - Data yet to be transmitted on USB = (Application-programmed initial transfer size – data transmitted on USB)

Internal data flow:

1. The application must set the transfer size and packet count fields in the endpoint-specific registers and enable the endpoint to transmit the data.
2. The application must also write the required data to the transmit FIFO for the endpoint.
3. Every time a packet is written into the transmit FIFO by the application, the transfer size for that endpoint is decremented by the packet size. The data is fetched from the memory by the application, until the transfer size for the endpoint becomes 0. After writing the data into the FIFO, the “number of packets in FIFO” count is incremented (this is a 3-bit count, internally maintained by the core for each IN endpoint transmit FIFO. The maximum number of packets maintained by the core at any time in an IN endpoint FIFO is eight). For zero-length packets, a separate flag is set for each FIFO, without any data in the FIFO.
4. Once the data are written to the transmit FIFO, the core reads them out upon receiving an IN token. For every non-isochronous IN data packet transmitted with an ACK

handshake, the packet count for the endpoint is decremented by one, until the packet count is zero. The packet count is not decremented on a timeout.

5. For zero length packets (indicated by an internal zero length flag), the core sends out a zero-length packet for the IN token and decrements the packet count field.
6. If there are no data in the FIFO for a received IN token and the packet count field for that endpoint is zero, the core generates an “IN token received when Tx FIFO is empty” (ITTXFE) interrupt for the endpoint, provided that the endpoint NAK bit is not set. The core responds with a NAK handshake for non-isochronous endpoints on the USB.
7. The core internally rewinds the FIFO pointers and no timeout interrupt is generated.
8. When the transfer size is 0 and the packet count is 0, the transfer complete (XFRC) interrupt for the endpoint is generated and the endpoint enable is cleared.

Application programming sequence:

1. Program the OTG_DIEPTSIZx register with the transfer size and corresponding packet count.
2. Program the OTG_DIEPCTLx register with the endpoint characteristics and set the CNAK and EPENA (endpoint enable) bits.
3. When transmitting non-zero length data packet, the application must poll the OTG_DTXFSTSx register (where x is the FIFO number associated with that endpoint) to determine whether there is enough space in the data FIFO. The application can optionally use TXFE (in OTG_DIEPINTx) before writing the data.

- **Generic periodic IN data transfers**

This section describes a typical periodic IN data transfer.

Application requirements:

1. Application requirements 1, 2, 3, and 4 of *Generic non-periodic IN data transfers on page 1820* also apply to periodic IN data transfers, except for a slight modification of requirement 2.
   – The application can only transmit multiples of maximum-packet-size data packets or multiples of maximum-packet-size packets, plus a short packet at the end. To

transmit a few maximum-packet-size packets and a short packet at the end of the transfer, the following conditions must be met:

transfer size[EPNUM] = x × MPSIZ[EPNUM] + sp
(where *x* is an integer ≥ 0, and 0 ≤ sp < MPSIZ[EPNUM])

If (sp > 0), packet count[EPNUM] = *x* + 1
Otherwise, packet count[EPNUM] = *x*;

MCNT[EPNUM] = packet count[EPNUM]

– The application cannot transmit a zero-length data packet at the end of a transfer. It can transmit a single zero-length data packet by itself. To transmit a single zero-length data packet:
– transfer size[EPNUM] = 0

  packet count[EPNUM] = 1

  MCNT[EPNUM] = packet count[EPNUM]

2. The application can only schedule data transfers one frame at a time.
   – (MCNT – 1) × MPSIZ ≤ XFERSIZ ≤ MCNT × MPSIZ
   – PKTCNT = MCNT (in OTG_DIEPTSIZx)
   – If XFERSIZ < MCNT × MPSIZ, the last data packet of the transfer is a short packet.
   – Note that: MCNT is in OTG_DIEPTSIZx, MPSIZ is in OTG_DIEPCTLx, PKTCNT is in OTG_DIEPTSIZx and XFERSIZ is in OTG_DIEPTSIZx
3. The complete data to be transmitted in the frame must be written into the transmit FIFO by the application, before the IN token is received. Even when 1 word of the data to be transmitted per frame is missing in the transmit FIFO when the IN token is received, the core behaves as when the FIFO is empty. When the transmit FIFO is empty:
   – A zero data length packet would be transmitted on the USB for isochronous IN endpoints
   – A NAK handshake would be transmitted on the USB for interrupt IN endpoints

Internal data flow:

1. The application must set the transfer size and packet count fields in the endpoint-specific registers and enable the endpoint to transmit the data.
2. The application must also write the required data to the associated transmit FIFO for the endpoint.
3. Every time the application writes a packet to the transmit FIFO, the transfer size for that endpoint is decremented by the packet size. The data are fetched from application memory until the transfer size for the endpoint becomes 0.
4. When an IN token is received for a periodic endpoint, the core transmits the data in the FIFO, if available. If the complete data payload (complete packet, in dedicated FIFO

mode) for the frame is not present in the FIFO, then the core generates an IN token received when Tx FIFO empty interrupt for the endpoint.

– A zero-length data packet is transmitted on the USB for isochronous IN endpoints
– A NAK handshake is transmitted on the USB for interrupt IN endpoints

5. The packet count for the endpoint is decremented by 1 under the following conditions:
   – For isochronous endpoints, when a zero- or non-zero-length data packet is transmitted
   – For interrupt endpoints, when an ACK handshake is transmitted
   – When the transfer size and packet count are both 0, the transfer completed interrupt for the endpoint is generated and the endpoint enable is cleared.
6. At the “Periodic frame Interval” (controlled by PFIVL in OTG_DCFG), when the core finds non-empty any of the isochronous IN endpoint FIFOs scheduled for the current frame non-empty, the core generates an IISOIXFR interrupt in OTG_GINTSTS.

Application programming sequence:

1. Program the OTG_DIEPCTLx register with the endpoint characteristics and set the CNAK and EPENA bits.
2. Write the data to be transmitted in the next frame to the transmit FIFO.
3. Asserting the ITTXFE interrupt (in OTG_DIEPINTx) indicates that the application has not yet written all data to be transmitted to the transmit FIFO.
4. If the interrupt endpoint is already enabled when this interrupt is detected, ignore the interrupt. If it is not enabled, enable the endpoint so that the data can be transmitted on the next IN token attempt.
5. Asserting the XFRC interrupt (in OTG_DIEPINTx) with no ITTXFE interrupt in OTG_DIEPINTx indicates the successful completion of an isochronous IN transfer. A read to the OTG_DIEPTSIZx register must give transfer size = 0 and packet count = 0, indicating all data were transmitted on the USB.
6. Asserting the XFRC interrupt (in OTG_DIEPINTx), with or without the ITTXFE interrupt (in OTG_DIEPINTx), indicates the successful completion of an interrupt IN transfer. A read to the OTG_DIEPTSIZx register must give transfer size = 0 and packet count = 0, indicating all data were transmitted on the USB.
7. Asserting the incomplete isochronous IN transfer (IISOIXFR) interrupt in OTG_GINTSTS with none of the aforementioned interrupts indicates the core did not receive at least 1 periodic IN token in the current frame.

- **Incomplete isochronous IN data transfers**

This section describes what the application must do on an incomplete isochronous IN data transfer.

Internal data flow:

1. An isochronous IN transfer is treated as incomplete in one of the following conditions:
   a) The core receives a corrupted isochronous IN token on at least one isochronous IN endpoint. In this case, the application detects an incomplete isochronous IN transfer interrupt (IISOIXFR in OTG_GINTSTS).
   b) The application is slow to write the complete data payload to the transmit FIFO and an IN token is received before the complete data payload is written to the FIFO. In this case, the application detects an IN token received when Tx FIFO empty interrupt in OTG_DIEPINTx. The application can ignore this interrupt, as it

eventually results in an incomplete isochronous IN transfer interrupt (IISOIXFR in OTG_GINTSTS) at the end of periodic frame.

The core transmits a zero-length data packet on the USB in response to the received IN token.

2. The application must stop writing the data payload to the transmit FIFO as soon as possible.
3. The application must set the NAK bit and the disable bit for the endpoint.
4. The core disables the endpoint, clears the disable bit, and asserts the endpoint disable interrupt for the endpoint.

Application programming sequence:

1. The application can ignore the IN token received when Tx FIFO empty interrupt in OTG_DIEPINTx on any isochronous IN endpoint, as it eventually results in an incomplete isochronous IN transfer interrupt (in OTG_GINTSTS).
2. Assertion of the incomplete isochronous IN transfer interrupt (in OTG_GINTSTS) indicates an incomplete isochronous IN transfer on at least one of the isochronous IN endpoints.
3. The application must read the endpoint control register for all isochronous IN endpoints to detect endpoints with incomplete IN data transfers.
4. The application must stop writing data to the Periodic Transmit FIFOs associated with these endpoints on the AHB.
5. Program the following fields in the OTG_DIEPCTLx register to disable the endpoint:
   – SNAK = 1 in OTG_DIEPCTLx
   – EPDIS = 1 in OTG_DIEPCTLx
6. The assertion of the endpoint disabled interrupt in OTG_DIEPINTx indicates that the core has disabled the endpoint.
   – At this point, the application must flush the data in the associated transmit FIFO or overwrite the existing data in the FIFO by enabling the endpoint for a new transfer in the next microframe. To flush the data, the application must use the OTG_GRSTCTL register.

- **Stalling non-isochronous IN endpoints**

This section describes how the application can stall a non-isochronous endpoint.

Application programming sequence:

1. Disable the IN endpoint to be stalled. Set the STALL bit as well.
2. EPDIS = 1 in OTG_DIEPCTLx, when the endpoint is already enabled
   – STALL = 1 in OTG_DIEPCTLx
   – The STALL bit always takes precedence over the NAK bit
3. Assertion of the endpoint disabled interrupt (in OTG_DIEPINTx) indicates to the application that the core has disabled the specified endpoint.
4. The application must flush the non-periodic or periodic transmit FIFO, depending on the endpoint type. In case of a non-periodic endpoint, the application must re-enable the other non-periodic endpoints that do not need to be stalled, to transmit data.
5. Whenever the application is ready to end the STALL handshake for the endpoint, the STALL bit must be cleared in OTG_DIEPCTLx.
6. If the application sets or clears a STALL bit for an endpoint due to a SetFeature.Endpoint Halt command or ClearFeature.Endpoint Halt command, the STALL bit must be set or cleared before the application sets up the status stage transfer on the control endpoint.

Special case: stalling the control OUT endpoint

The core must stall IN/OUT tokens if, during the data stage of a control transfer, the host sends more IN/OUT tokens than are specified in the SETUP packet. In this case, the application must enable the ITTXFE interrupt in OTG_DIEPINTx and the OTEPDIS interrupt in OTG_DOEPINTx during the data stage of the control transfer, after the core has transferred the amount of data specified in the SETUP packet. Then, when the application receives this interrupt, it must set the STALL bit in the corresponding endpoint control register, and clear this interrupt.

47.16.6 Worst case response time

When the OTG_FS controller acts as a device, there is a worst case response time for any tokens that follow an isochronous OUT. This worst case response time depends on the AHB clock frequency.

The core registers are in the AHB domain, and the core does not accept another token before updating these register values. The worst case is for any token following an isochronous OUT, because for an isochronous transaction, there is no handshake and the next token could come sooner. This worst case value is 7 PHY clocks when the AHB clock is the same as the PHY clock. When the AHB clock is faster, this value is smaller.

If this worst case condition occurs, the core responds to bulk/interrupt tokens with a NAK and drops isochronous and SETUP tokens. The host interprets this as a timeout condition for SETUP and retries the SETUP packet. For isochronous transfers, the Incomplete isochronous IN transfer interrupt (IISOIXFR) and Incomplete isochronous OUT transfer interrupt (IISOOXFR) inform the application that isochronous IN/OUT packets were dropped.

Choosing the value of TRDT in OTG_GUSBCFG

The value in TRDT (OTG_GUSBCFG) is the time it takes for the MAC, in terms of PHY clocks after it has received an IN token, to get the FIFO status, and thus the first data from the PFC block. This time involves the synchronization delay between the PHY and AHB clocks. The worst case delay for this is when the AHB clock is the same as the PHY clock. In this case, the delay is 5 clocks.

Once the MAC receives an IN token, this information (token received) is synchronized to the AHB clock by the PFC (the PFC runs on the AHB clock). The PFC then reads the data from the SPRAM and writes them into the dual clock source buffer. The MAC then reads the data out of the source buffer (4 deep).

If the AHB is running at a higher frequency than the PHY, the application can use a smaller value for TRDT (in OTG_GUSBCFG).

Figure 550 has the following signals:

- tkn_rcvd: Token received information from MAC to PFC
- dynced_tkn_rcvd: Doubled sync tkn_rcvd, from PCLK to HCLK domain
- spr_read: Read to SPRAM
- spr_addr: Address to SPRAM
- spr_rdata: Read data from SPRAM
- srcbuf_push: Push to the source buffer
- srcbuf_rdata: Read data from the source buffer. Data seen by MAC

To calculate the value of TRDT, refer to *Table 326: TRDT values (FS)* .

Figure 550. TRDT max timing case

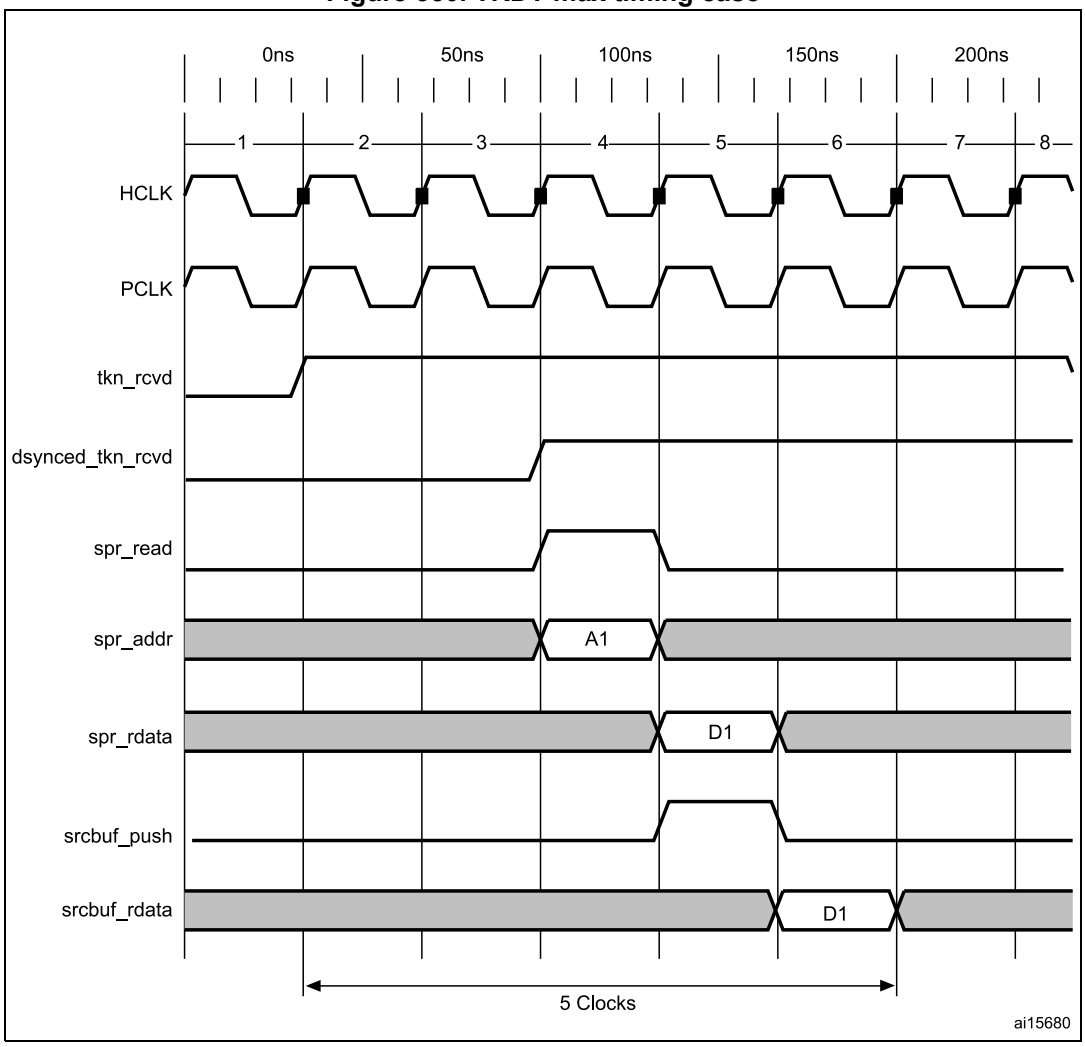

47.16.7 OTG programming model

The OTG_FS controller is an OTG device supporting HNP and SRP. When the core is connected to an “A” plug, it is referred to as an A-device. When the core is connected to a “B” plug it is referred to as a B-device. In host mode, the OTG_FS controller turns off V_{BUS} to conserve power. SRP is a method by which the B-device signals the A-device to turn on V_{BUS} power. A device must perform both data-line pulsing and V_{BUS} pulsing, but a host can detect either data-line pulsing or V_{BUS} pulsing for SRP. HNP is a method by which the B-device negotiates and switches to host role. In Negotiated mode after HNP, the B-device suspends the bus and reverts to the device role.

A-device session request protocol

The application must set the SRP-capable bit in the core USB configuration register. This enables the OTG_FS controller to detect SRP as an A-device.

Figure 551. A-device SRP

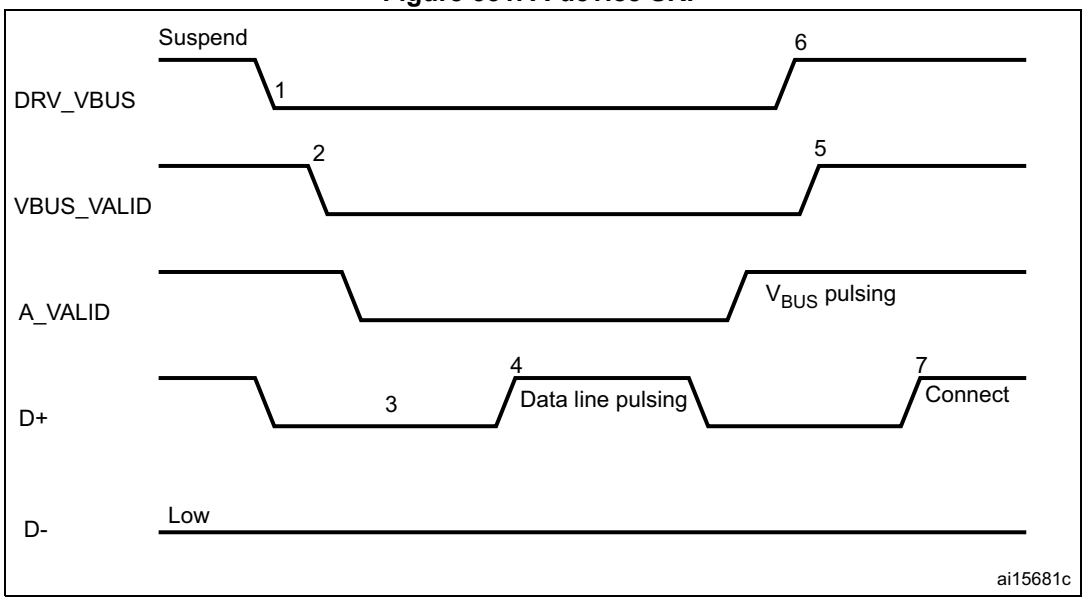

1. DRV_VBUS = V_{BUS} drive signal to the PHY
   VBUS_VALID = V_{BUS} valid signal from PHY
   A_VALID = A-peripheral V_{BUS} level signal to PHY
   D+ = Data plus line
   D- = Data minus line

The following points refer and describe the signal numeration shown in the *Figure 551*:

1. To save power, the application suspends and turns off port power when the bus is idle by writing the port suspend and port power bits in the host port control and status register.
2. PHY indicates port power off by deasserting the VBUS_VALID signal.
3. The device must detect SE0 for at least 2 ms to start SRP when V_{BUS} power is off.
4. To initiate SRP, the device turns on its data line pull-up resistor for 5 to 10 ms. The OTG_FS controller detects data-line pulsing.
5. The device drives V_{BUS} above the A-device session valid (2.0 V minimum) for V_{BUS} pulsing.
   The OTG_FS controller interrupts the application on detecting SRP. The session

request detected bit is set in Global interrupt status register (SRQINT set in OTG_GINTSTS).

6. The application must service the session request detected interrupt and turn on the port power bit by writing the port power bit in the host port control and status register. The PHY indicates port power-on by asserting the VBUS_VALID signal.
7. When the USB is powered, the device connects, completing the SRP process.

B-device session request protocol

The application must set the SRP-capable bit in the core USB configuration register. This enables the OTG_FS controller to initiate SRP as a B-device. SRP is a means by which the OTG_FS controller can request a new session from the host.

Figure 552. B-device SRP

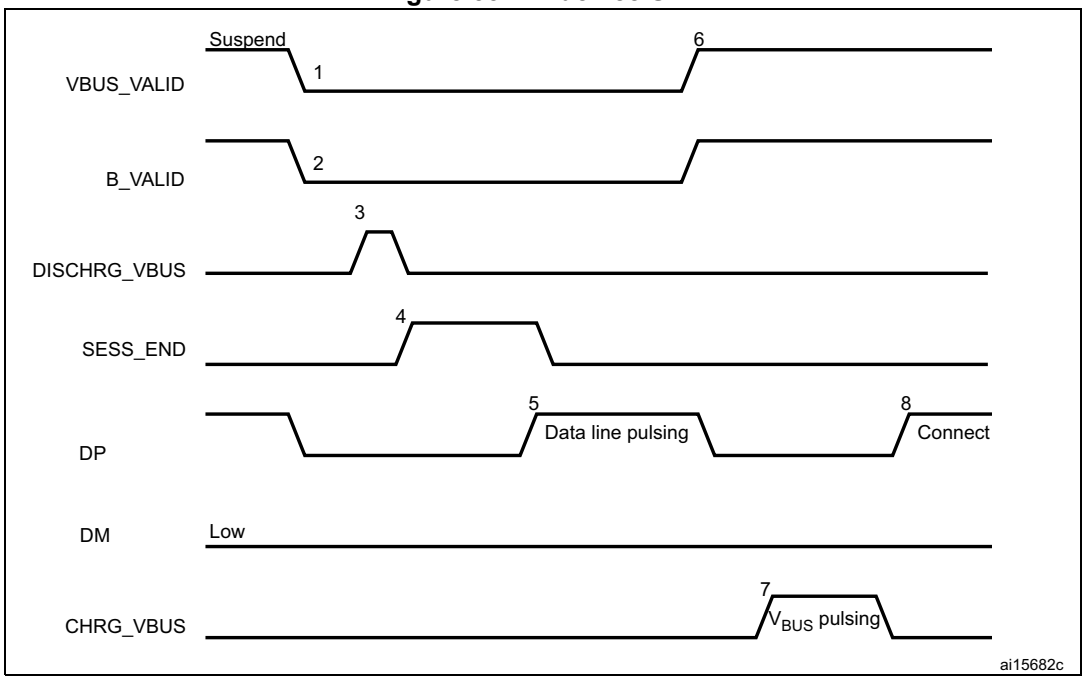

1. VBUS_VALID = V_{BUS} valid signal from PHY
B_VALID = B-peripheral valid session to PHY
DISCHRG_VBUS = discharge signal to PHY
SESS_END = session end signal to PHY
CHRG_VBUS = charge V_{BUS} signal to PHY
DP = Data plus line
DM = Data minus line

The following points refer and describe the signal numeration shown in the *Figure 552*:

1. To save power, the host suspends and turns off port power when the bus is idle.
The OTG_FS controller sets the early suspend bit in the core interrupt register after 3 ms of bus idleness. Following this, the OTG_FS controller sets the USB suspend bit in the core interrupt register.
The OTG_FS controller informs the PHY to discharge V_{BUS}.
2. The PHY indicates the session's end to the device. This is the initial condition for SRP.
The OTG_FS controller requires 2 ms of SE0 before initiating SRP.
For a USB 1.1 full-speed serial transceiver, the application must wait until V_{BUS} discharges to 0.2 V after BSVLD (in OTG_GOTGCTL) is deasserted. This discharge

time can be obtained from the transceiver vendor and varies from one transceiver to another.

3. The OTG_FS core informs the PHY to speed up V_{BUS} discharge.
4. The application initiates SRP by writing the session request bit in the OTG control and status register. The OTG_FS controller perform data-line pulsing followed by V_{BUS} pulsing.
5. The host detects SRP from either the data-line or V_{BUS} pulsing, and turns on V_{BUS}. The PHY indicates V_{BUS} power-on to the device.
6. The OTG_FS controller performs V_{BUS} pulsing.
   The host starts a new session by turning on V_{BUS}, indicating SRP success. The OTG_FS controller interrupts the application by setting the session request success status change bit in the OTG interrupt status register. The application reads the session request success bit in the OTG control and status register.
7. When the USB is powered, the OTG_FS controller connects, completing the SRP process.

A-device host negotiation protocol

HNP switches the USB host role from the A-device to the B-device. The application must set the HNP-capable bit in the core USB configuration register to enable the OTG_FS controller to perform HNP as an A-device.

Figure 553. A-device HNP

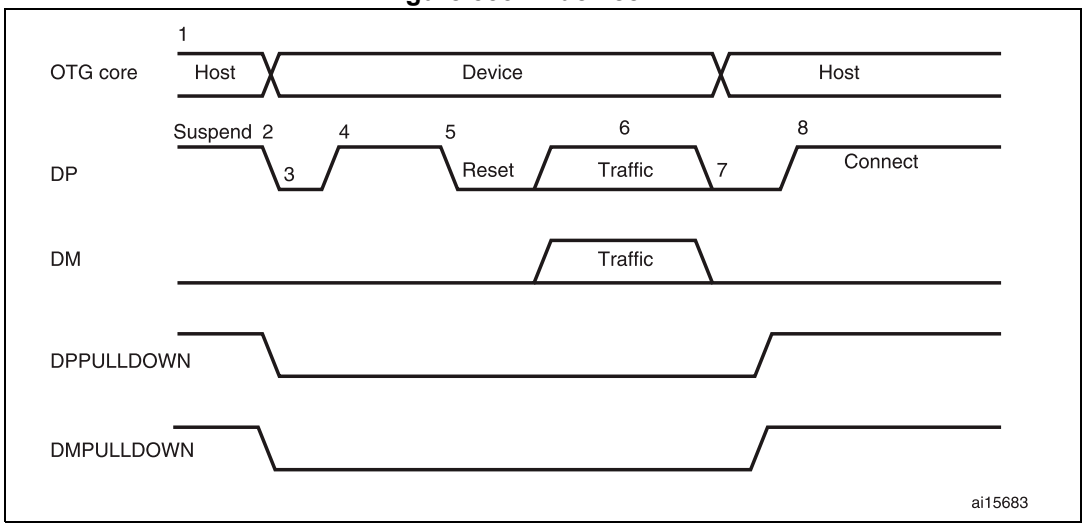

1. DPPULLDOWN = signal from core to PHY to enable/disable the pull-down on the DP line inside the PHY.
   DMPULLDOWN = signal from core to PHY to enable/disable the pull-down on the DM line inside the PHY.

The following points refer and describe the signal numeration shown in the *Figure 553*:

1. The OTG_FS controller sends the B-device a SetFeature b_hnp_enable descriptor to enable HNP support. The B-device's ACK response indicates that the B-device supports HNP. The application must set host Set HNP enable bit in the OTG control

and status register to indicate to the OTG_FS controller that the B-device supports HNP.

2. When it has finished using the bus, the application suspends by writing the port suspend bit in the host port control and status register.
3. When the B-device observes a USB suspend, it disconnects, indicating the initial condition for HNP. The B-device initiates HNP only when it must switch to the host role; otherwise, the bus continues to be suspended.

   The OTG_FS controller sets the host negotiation detected interrupt in the OTG interrupt status register, indicating the start of HNP.

   The OTG_FS controller deasserts the DM pull down and DM pull down in the PHY to indicate a device role. The PHY enables the OTG_DP pull-up resistor to indicate a connect for B-device.

   The application must read the current mode bit in the OTG control and status register to determine device mode operation.
4. The B-device detects the connection, issues a USB reset, and enumerates the OTG_FS controller for data traffic.
5. The B-device continues the host role, initiating traffic, and suspends the bus when done.

   The OTG_FS controller sets the early suspend bit in the core interrupt register after 3 ms of bus idleness. Following this, the OTG_FS controller sets the USB suspend bit in the core interrupt register.
6. In Negotiated mode, the OTG_FS controller detects the suspend, disconnects, and switches back to the host role. The OTG_FS controller asserts the DM pull down and DM pull down in the PHY to indicate its assumption of the host role.
7. The OTG_FS controller sets the connector ID status change interrupt in the OTG interrupt status register. The application must read the connector ID status in the OTG control and status register to determine the OTG_FS controller operation as an A-device. This indicates the completion of HNP to the application. The application must read the Current mode bit in the OTG control and status register to determine host mode operation.
8. The B-device connects, completing the HNP process.

B-device host negotiation protocol

HNP switches the USB host role from B-device to A-device. The application must set the HNP-capable bit in the core USB configuration register to enable the OTG_FS controller to perform HNP as a B-device.

Figure 554. B-device HNP

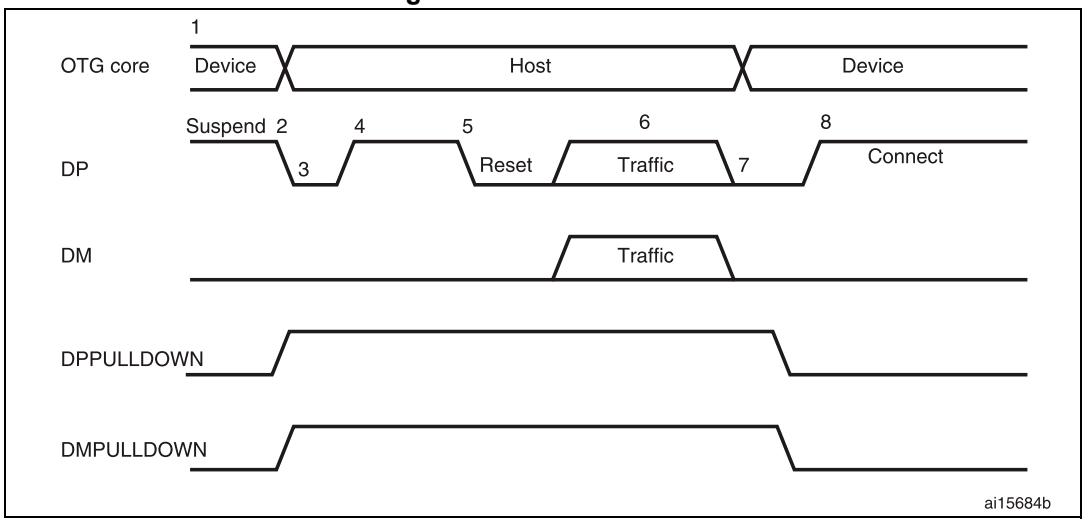

1. DPPULLDOWN = signal from core to PHY to enable/disable the pull-down on the DP line inside the PHY. DMPULLDOWN = signal from core to PHY to enable/disable the pull-down on the DM line inside the PHY.

The following points refer and describe the signal numeration shown in the *Figure 554*:

1. The A-device sends the SetFeature b_hnp_enable descriptor to enable HNP support. The OTG_FS controller's ACK response indicates that it supports HNP. The application must set the device HNP enable bit in the OTG control and status register to indicate HNP support.

   The application sets the HNP request bit in the OTG control and status register to indicate to the OTG_FS controller to initiate HNP.

2. When it has finished using the bus, the A-device suspends by writing the port suspend bit in the host port control and status register.

   The OTG_FS controller sets the Early suspend bit in the core interrupt register after 3 ms of bus idleness. Following this, the OTG_FS controller sets the USB suspend bit in the core interrupt register.

   The OTG_FS controller disconnects and the A-device detects SE0 on the bus, indicating HNP. The OTG_FS controller asserts the DP pull down and DM pull down in the PHY to indicate its assumption of the host role.

   The A-device responds by activating its OTG_DP pull-up resistor within 3 ms of detecting SE0. The OTG_FS controller detects this as a connect.

   The OTG_FS controller sets the host negotiation success status change interrupt in the OTG interrupt status register, indicating the HNP status. The application must read the host negotiation success bit in the OTG control and status register to determine host

negotiation success. The application must read the current Mode bit in the core interrupt register (OTG_GINTSTS) to determine host mode operation.

3. The application sets the reset bit (PRST in OTG_HPRT) and the OTG_FS controller issues a USB reset and enumerates the A-device for data traffic.
4. The OTG_FS controller continues the host role of initiating traffic, and when done, suspends the bus by writing the port suspend bit in the host port control and status register.
5. In Negotiated mode, when the A-device detects a suspend, it disconnects and switches back to the host role. The OTG_FS controller deasserts the DP pull down and DM pull down in the PHY to indicate the assumption of the device role.
6. The application must read the current mode bit in the core interrupt (OTG_GINTSTS) register to determine the host mode operation.
7. The OTG_FS controller connects, completing the HNP process.

48 Debug support (DBG)

48.1 Overview

The STM32L47x/L48x/L49x/L4Ax devices are built around a Cortex®-M4 core which contains hardware extensions for advanced debugging features. The debug extensions allow the core to be stopped either on a given instruction fetch (breakpoint) or data access (watchpoint). When stopped, the core's internal state and the system's external state may be examined. Once examination is complete, the core and the system may be restored and program execution resumed.

The debug features are used by the debugger host when connecting to and debugging the STM32L47x/L48x/L49x/L4Ax MCUs.

Two interfaces for debug are available:

- Serial wire
- JTAG debug port

Figure 555. Block diagram of STM32 MCU and Cortex®-M4-level debug support

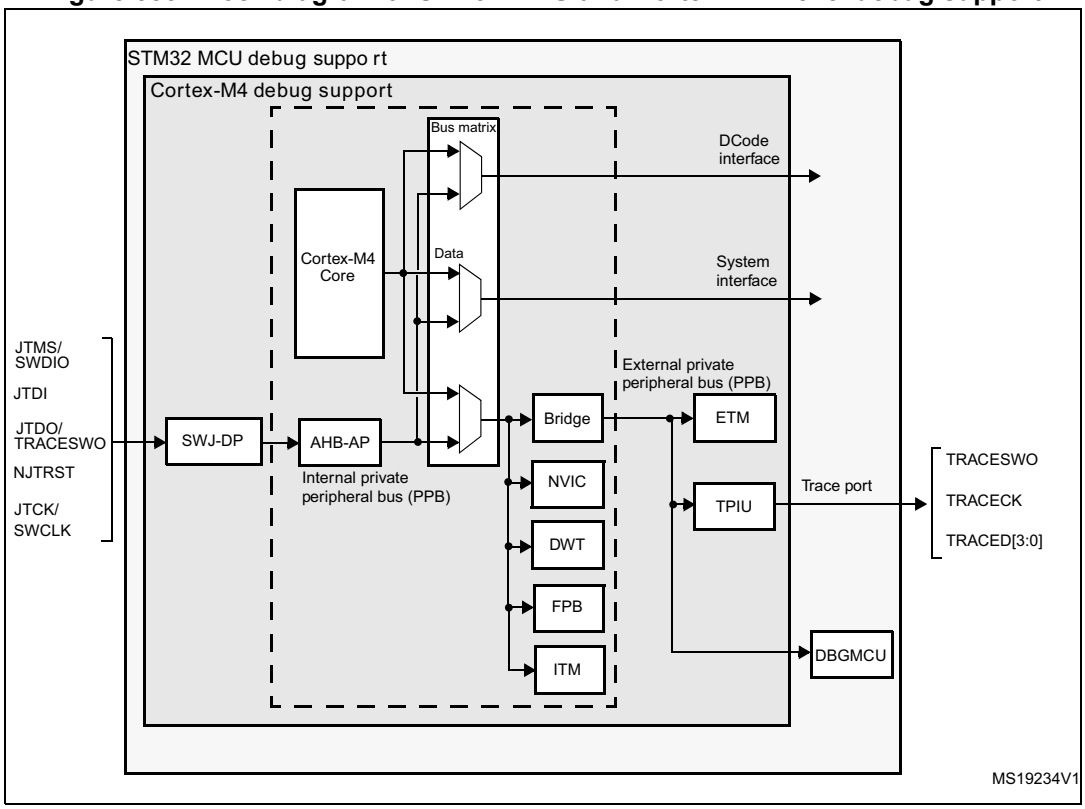

Note: The debug features embedded in the Cortex®-M4 core are a subset of the Arm® CoreSight Design Kit.

The Arm® Cortex®-M4 core provides integrated on-chip debug support. It is comprised of:

- SWJ-DP: Serial wire / JTAG debug port
- AHP-AP: AHB access port
- ITM: Instrumentation trace macrocell
- FPB: Flash patch breakpoint
- DWT: Data watchpoint trigger
- TPUI: Trace port unit interface (available on larger packages, where the corresponding pins are mapped)
- ETM: Embedded Trace Macrocell (available only on STM32L47x/L48x/L49x/L4Ax devices larger packages, where the corresponding pins are mapped)

It also includes debug features dedicated to the STM32L47x/L48x/L49x/L4Ax:

- Flexible debug pinout assignment
- MCU debug box (support for low-power modes, control over peripheral clocks, etc.)

*Note: For further information on debug functionality supported by the Arm® Cortex®-M4 core, refer to the Cortex®-M4-*r0p1 *Technical Reference Manual and to the CoreSight Design Kit-r0p1 TRM (see Section 48.2: Reference Arm® documentation).*

48.2 Reference Arm® documentation

- Cortex®-M4 r0p1 Technical Reference Manual (TRM),
  search for “Cortex®-M4 Technical Reference Manual” at http://infocenter.arm.com
- Arm® Debug Interface V5
- Arm® CoreSight Design Kit revision r0p1 Technical Reference Manual

48.3 SWJ debug port (serial wire and JTAG)

The STM32L47x/L48x/L49x/L4Ax core integrates the Serial Wire / JTAG Debug Port (SWJ-DP). It is an Arm® standard CoreSight debug port that combines a JTAG-DP (5-pin) interface and a SW-DP (2-pin) interface.

- The JTAG Debug Port (JTAG-DP) provides a 5-pin standard JTAG interface to the AHP-AP port.
- The Serial Wire Debug Port (SW-DP) provides a 2-pin (clock + data) interface to the AHP-AP port.

In the SWJ-DP, the two JTAG pins of the SW-DP are multiplexed with some of the five JTAG pins of the JTAG-DP.

Figure 556. SWJ debug port

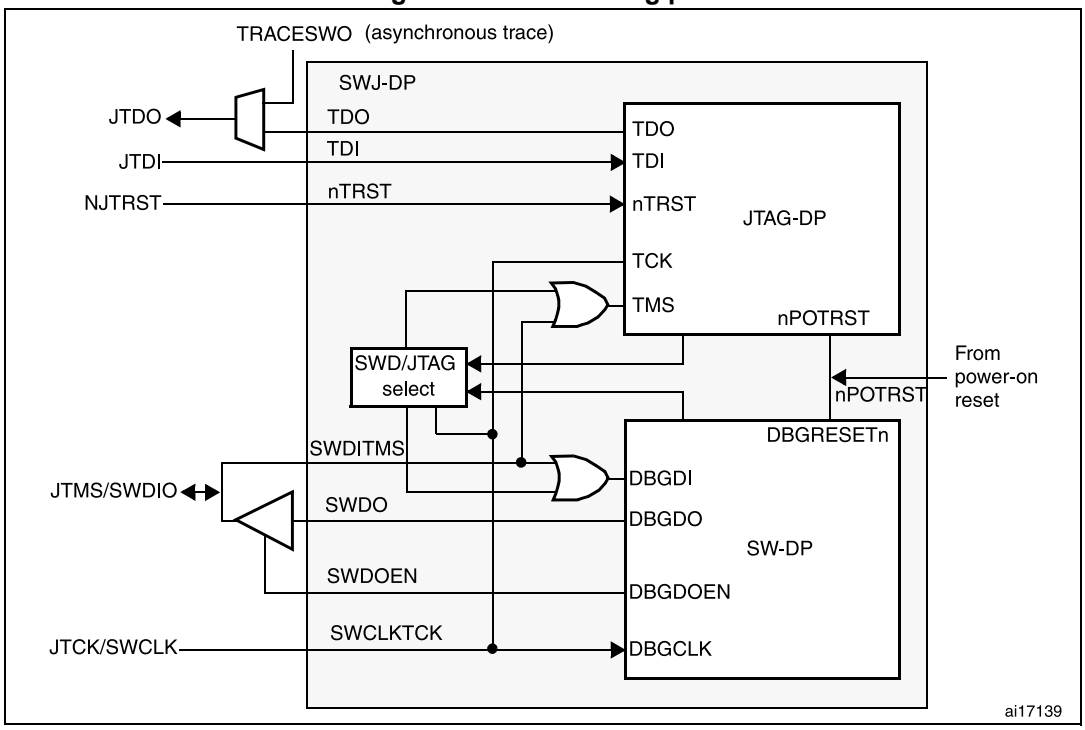

Figure 556 shows that the asynchronous TRACE output (TRACESWO) is multiplexed with TDO. This means that the asynchronous trace can only be used with SW-DP, not JTAG-DP.

48.3.1 Mechanism to select the JTAG-DP or the SW-DP

By default, the JTAG-Debug Port is active.

If the debugger host wants to switch to the SW-DP, it must provide a dedicated JTAG sequence on TMS/TCK (respectively mapped to SWDIO and SWCLK) which disables the JTAG-DP and enables the SW-DP. This way it is possible to activate the SWDP using only the SWCLK and SWDIO pins.

This sequence is:

1. Send more than 50 TCK cycles with TMS (SWDIO) =1
2. Send the 16-bit sequence on TMS (SWDIO) = 0111100111100111 (MSB transmitted first)
3. Send more than 50 TCK cycles with TMS (SWDIO) =1

48.4 Pinout and debug port pins

The STM32L47x/L48x/L49x/L4Ax MCUs are available in various packages with different numbers of available pins. As a result, some functionalities (ETM) related to pin availability may differ between packages.

48.4.1 SWJ debug port pins

Five pins are used as outputs from the STM32L47x/L48x/L49x/L4Ax for the SWJ-DP as *alternate functions* of general-purpose I/Os. These pins are available on all packages.

Table 329. SWJ debug port pins

SWJ-DP pin name	JTAG debug port		SW debug port		Pin assign ment
	Type	Description	Type	Debug assignment	
JTMS/SWDIO	I	JTAG Test Mode Selection	IO	Serial Wire Data Input/Output	PA13
JTCK/SWCLK	I	JTAG Test Clock	I	Serial Wire Clock	PA14
JTDI	I	JTAG Test Data Input	-	-	PA15
JTDO/TRACESWO	O	JTAG Test Data Output	-	TRACESWO if asynchronous trace is enabled	PB3
NJTRST	I	JTAG Test nReset	-	-	PB4

48.4.2 Flexible SWJ-DP pin assignment

After RESET (SYSRESETn or PORESETn), all five pins used for the SWJ-DP are assigned as dedicated pins immediately usable by the debugger host (note that the trace outputs are not assigned except if explicitly programmed by the debugger host).

However, the STM32L47x/L48x/L49x/L4Ax MCUs offer the possibility of disabling some or all of the SWJ-DP ports, and therefore the possibility of releasing the associated pins for general-purpose I/O (GPIO) usage, except for NJTRST that can be left disconnected but cannot be used as general purpose GPIO without loosing debugger connection. For more details on how to disable SWJ-DP port pins, please refer to *Section 8.4.2: I/O pin alternate function multiplexer and mapping*.

Table 330. Flexible SWJ-DP pin assignment

Available debug ports	SWJ IO pin assigned				
	PA13 / JTMS/ SWDIO	PA14 / JTCK/ SWCLK	PA15 / JTDI	PB3 / JTDO	PB4/ NJTRST
Full SWJ (JTAG-DP + SW-DP) - Reset State	X	X	X	X	X
Full SWJ (JTAG-DP + SW-DP) but without NJTRST	X	X	X	X	
JTAG-DP disabled and SW-DP enabled	X	X			
JTAG-DP disabled and SW-DP disabled	Released				

Note: When the APB bridge write buffer is full, it takes one extra APB cycle when writing the AFIO_MAPR register. This is because the deactivation of the JTAGSW pins is done in two cycles to guarantee a clean level on the nTRST and TCK input signals of the core.

- Cycle 1: the JTAGSW input signals to the core are tied to 1 or 0 (to 1 for nTRST, TDI and TMS, to 0 for TCK)
- Cycle 2: the GPIO controller takes the control signals of the SWJTAG IO pins (like controls of direction, pull-up/down, Schmitt trigger activation, etc.).

48.4.3 Internal pull-up and pull-down on JTAG pins

It is necessary to ensure that the JTAG input pins are not floating since they are directly connected to flip-flops to control the debug mode features. Special care must be taken with the SWCLK/TCK pin which is directly connected to the clock of some of these flip-flops.

To avoid any uncontrolled IO levels, the device embeds internal pull-ups and pull-downs on the JTAG input pins:

- NJTRST: internal pull-up
- JTDI: internal pull-up
- JTMS/SWDIO: internal pull-up
- TCK/SWCLK: internal pull-down

Once a JTAG IO is released by the user software, the GPIO controller takes control again. The reset states of the GPIO control registers put the I/Os in the equivalent state:

- NJTRST: input pull-up
- JTDI: input pull-up
- JTMS/SWDIO: input pull-up
- JTCK/SWCLK: input pull-down
- JTDO: input floating

The software can then use these I/Os as standard GPIOs.

Note: The JTAG IEEE standard recommends to add pull-ups on TDI, TMS and nTRST but there is no special recommendation for TCK. However, for JTCK, the device needs an integrated pull-down.

Having embedded pull-ups and pull-downs removes the need to add external resistors.

48.4.4 Using serial wire and releasing the unused debug pins as GPIOs

To use the serial wire DP to release some GPIOs, the user software must change the GPIO (PA15, PB3 and PB4) configuration mode in the GPIO_MODER register.This releases PA15, PB3 and PB4 which now become available as GPIOs.

When debugging, the host performs the following actions:

- Under system reset, all SWJ pins are assigned (JTAG-DP + SW-DP).
- Under system reset, the debugger host sends the JTAG sequence to switch from the JTAG-DP to the SW-DP.
- Still under system reset, the debugger sets a breakpoint on vector reset.
- The system reset is released and the Core halts.
- All the debug communications from this point are done using the SW-DP. The other JTAG pins can then be reassigned as GPIOs by the user software.

Note: For user software designs, note that:

To release the debug pins, remember that they will be first configured either in input-pull-up (nTRST, TMS, TDI) or pull-down (TCK) or output tristate (TDO) for a certain duration after reset until the instant when the user software releases the pins.

When debug pins (JTAG or SW or TRACE) are mapped, changing the corresponding IO pin configuration in the IOPORT controller has no effect.

48.5 STM32L47x/L48x/L49x/L4Ax JTAG TAP connection

The STM32L47x/L48x/L49x/L4Ax MCUs integrate two serially connected JTAG TAPs, the boundary scan TAP (IR is 5-bit wide) and the Cortex®-M4 TAP (IR is 4-bit wide).

To access the TAP of the Cortex®-M4 for debug purposes:

1. First, it is necessary to shift the BYPASS instruction of the boundary scan TAP.
2. Then, for each IR shift, the scan chain contains 9 bits (=5+4) and the unused TAP instruction must be shifted by using the BYPASS instruction.
3. For each data shift, the unused TAP, which is in BYPASS mode, adds 1 extra data bit in the data scan chain.

*Note: **Important**: Once Serial-Wire is selected using the dedicated Arm® JTAG sequence, the boundary scan TAP is automatically disabled (JTMS forced high).*

Figure 557. JTAG TAP connections

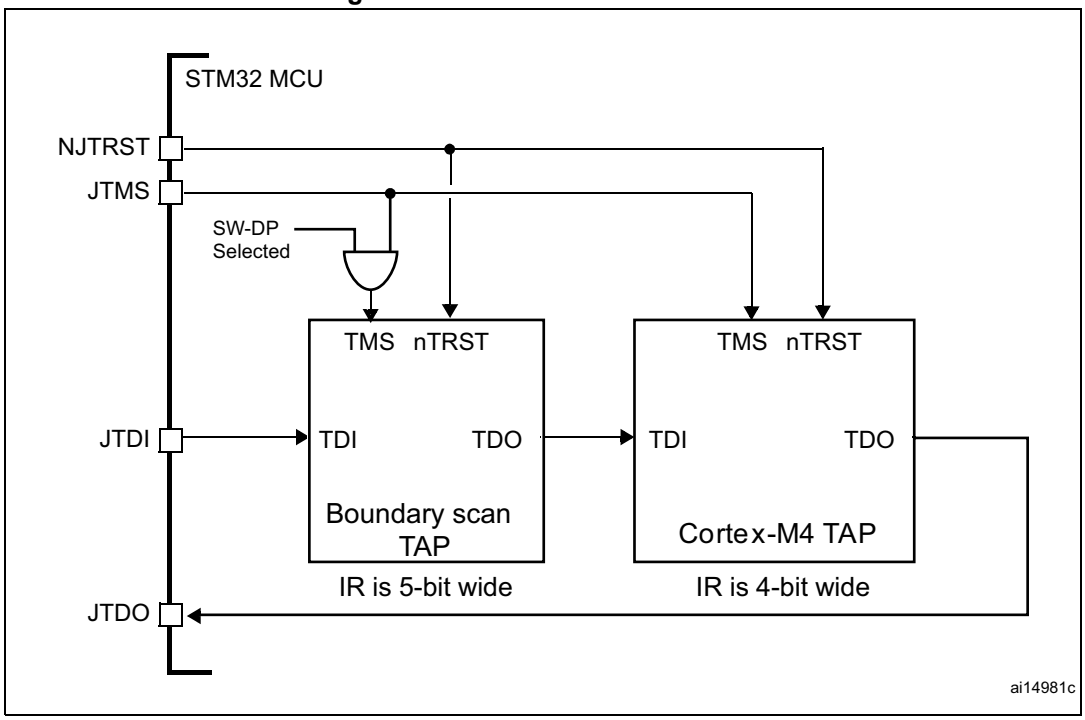

48.6 ID codes and locking mechanism

There are several ID codes inside the STM32L47x/L48x/L49x/L4Ax MCUs. ST strongly recommends tools designers to lock their debuggers using the MCU DEVICE ID code located in the external PPB memory map at address 0xE0042000.

48.6.1 MCU device ID code

The STM32L47x/L48x/L49x/L4Ax MCUs integrate an MCU ID code. This ID identifies the ST MCU part-number and the die revision. It is part of the DBG_MCU component and is mapped on the external PPB bus (see *Section 48.16 on page 1853*). This code is accessible using the JTAG debug port (4 to 5 pins) or the SW debug port (two pins) or by the user software. It is even accessible while the MCU is under system reset.

Only the DEV_ID(11:0) should be used for identification by the debugger/programmer tools.

DBGMCU_IDCODE

Address: 0xE004 2000

Only 32-bits access supported. Read-only

31	30	29	28	27	26	25	24	23	22	21	20	19	18	17	16
REV_ID															
r	r	r	r	r	r	r	r	r	r	r	r	r	r	r	r
15	14	13	12	11	10	9	8	7	6	5	4	3	2	1	0
Res.	Res.	Res.	Res.	DEV_ID											
				r	r	r	r	r	r	r	r	r	r	r	r

Bits 31:16 **REV_ID[15:0]** Revision identifier
This field indicates the revision of the device.
For STM32L47x/L48x devices
0x1000: Rev 1
0x1001: Rev 2
0x1003: Rev 3
0x1007: Rev 4
For STM32L49x/L4Ax devices
0x1000: Rev A
0x2000: Rev B

Bits 15:12 Reserved, must be kept at reset value.

Bits 11:0 **DEV_ID[11:0]**: Device identifier
The device ID is:
0x461 for STM32L49x/L4Ax devices
0x415 for STM32L47x/L48x devices.

48.6.2 Boundary scan TAP

JTAG ID code

The TAP of the STM32L47x/L48x/L49x/L4Ax BSC (boundary scan) integrates a JTAG ID code equal to 0x06415041.

48.6.3 Cortex®-M4 TAP

The TAP of the Arm® Cortex®-M4 integrates a JTAG ID code. This ID code is the Arm® default one and has not been modified. This code is only accessible by the JTAG Debug Port.

This code is **0x4BA00477** (corresponds to Cortex®-M4 r0p1, see *Section 48.2: Reference Arm® documentation*).

48.6.4 Cortex®-M4 JEDEC-106 ID code

The Arm® Cortex®-M4 integrates a JEDEC-106 ID code. It is located in the 4KB ROM table mapped on the internal PPB bus at address 0xE00FF000_0xE00FFFFF.

This code is accessible by the JTAG Debug Port (4 to 5 pins) or by the SW Debug Port (two pins) or by the user software.

48.7 JTAG debug port

A standard JTAG state machine is implemented with a 4-bit instruction register (IR) and five data registers (for full details, refer to the Cortex®-M4 with FPU r0p1 Techni*cal Reference Manual (TRM), for references, please see Section 48.2: Reference Arm® documentation)*.

Table 331. JTAG debug port data registers

IR(3:0)	Data register	Details
1111	BYPASS [1 bit]	-
1110	IDCODE [32 bits]	ID CODE 0x3BA00477 (Arm® Cortex®-M4 r0p1-01rel0 ID Code)
1010	DPACC [35 bits]	Debug port access register This initiates a debug port and allows access to a debug port register. – When transferring data IN: Bits 34:3= DATA[31:0] = 32-bit data to transfer for a write request Bits 2:1 = A[3:2] = 2-bit address of a debug port register. Bit 0 = RnW = Read request (1) or write request (0). – When transferring data OUT: Bits 34:3 = DATA[31:0] = 32-bit data which is read following a read request Bits 2:0 = ACK[2:0] = 3-bit Acknowledge: 010 = OK/FAULT 001 = WAIT OTHER = reserved Refer to *Table 332* for a description of the A(3:2) bits

Table 331. JTAG debug port data registers (continued)

IR(3:0)	Data register	Details
1011	APACC [35 bits]	Access port access register Initiates an access port and allows access to an access port register. – When transferring data IN: Bits 34:3 = DATA[31:0] = 32-bit data to shift in for a write request Bits 2:1 = A[3:2] = 2-bit address (sub-address AP registers). Bit 0 = RnW= Read request (1) or write request (0). – When transferring data OUT: Bits 34:3 = DATA[31:0] = 32-bit data which is read following a read request Bits 2:0 = ACK[2:0] = 3-bit Acknowledge: 010 = OK/FAULT 001 = WAIT OTHER = reserved There are many AP Registers (see AHB-AP) addressed as the combination of: – The shifted value A[3:2] – The current value of the DP SELECT register
1000	ABORT [35 bits]	Abort register – Bits 31:1 = Reserved – Bit 0 = DAPABORT: write 1 to generate a DAP abort.

Table 332. 32-bit debug port registers addressed through the shifted value A[3:2]

Address	A(3:2) value	Description
0x0	00	Reserved, must be kept at reset value.
0x4	01	DP CTRL/STAT register. Used to: – Request a system or debug power-up – Configure the transfer operation for AP accesses – Control the pushed compare and pushed verify operations – Read some status flags (overrun, power-up acknowledges)
0x8	10	DP SELECT register. Used to select the current access port and the active 4-words register window. – Bits 31:24: APSEL: select the current AP – Bits 23:8: reserved – Bits 7:4: APBANKSEL: select the active 4-words register window on the current AP – Bits 3:0: reserved
0xC	11	DP RDBUFF register: Used to allow the debugger to get the final result after a sequence of operations (without requesting new JTAG-DP operation)

48.8 SW debug port

48.8.1 SW protocol introduction

This synchronous serial protocol uses two pins:

- SWCLK: clock from host to target
- SWDIO: bidirectional

The protocol allows two banks of registers (DPACC registers and APACC registers) to be read and written to.

Bits are transferred LSB-first on the wire.

For SWDIO bidirectional management, the line must be pulled-up on the board (100 kΩ recommended by Arm®).

Each time the direction of SWDIO changes in the protocol, a turnaround time is inserted where the line is not driven by the host nor the target. By default, this turnaround time is one bit time, however this can be adjusted by configuring the SWCLK frequency.

48.8.2 SW protocol sequence

Each sequence consist of three phases:

1. Packet request (8 bits) transmitted by the host
2. Acknowledge response (3 bits) transmitted by the target
3. Data transfer phase (33 bits) transmitted by the host or the target

Table 333. Packet request (8-bits)

Bit	Name	Description
0	Start	Must be “1”
1	APnDP	0: DP Access 1: AP Access
2	RnW	0: Write Request 1: Read Request
4:3	A(3:2)	Address field of the DP or AP registers (refer to *Table 332*)
5	Parity	Single bit parity of preceding bits
6	Stop	0
7	Park	Not driven by the host. Must be read as “1” by the target because of the pull-up

Refer to the Cortex®-M4 r0p1 *TRM* for a detailed description of DPACC and APACC registers.

The packet request is always followed by the turnaround time (default 1 bit) where neither the host nor target drive the line.

Table 334. ACK response (3 bits)

Bit	Name	Description
0..2	ACK	001: FAULT 010: WAIT 100: OK

The ACK Response must be followed by a turnaround time only if it is a READ transaction or if a WAIT or FAULT acknowledge has been received.

Table 335. DATA transfer (33 bits)

Bit	Name	Description
0..31	WDATA or RDATA	Write or Read data
32	Parity	Single parity of the 32 data bits

The DATA transfer must be followed by a turnaround time only if it is a READ transaction.

48.8.3 SW-DP state machine (reset, idle states, ID code)

The State Machine of the SW-DP has an internal ID code which identifies the SW-DP. It follows the JEP-106 standard. This ID code is the default Arm® one and is set to **0x1BA01477** (corresponding to Cortex®-M4 r0p1).

Note: *Note that the SW-DP state machine is inactive until the target reads this ID code.*

- The SW-DP state machine is in RESET STATE either after power-on reset, or after the DP has switched from JTAG to SWD or after the line is high for more than 50 cycles
- The SW-DP state machine is in IDLE STATE if the line is low for at least two cycles after RESET state.
- After RESET state, it is **mandatory** to first enter into an IDLE state AND to perform a READ access of the DP-SW ID CODE register. Otherwise, the target will issue a FAULT acknowledge response on another transactions.

Further details of the SW-DP state machine can be found in the *Cortex®-M4 r0p1 TRM* and the *CoreSight Design Kit r0p1 TRM*.

48.8.4 DP and AP read/write accesses

- Read accesses to the DP are not posted: the target response can be immediate (if ACK=OK) or can be delayed (if ACK=WAIT).
- Read accesses to the AP are posted. This means that the result of the access is returned on the next transfer. If the next access to be done is NOT an AP access, then the DP-RDBUFF register must be read to obtain the result.
  The READOK flag of the DP-CTRL/STAT register is updated on every AP read access or RDBUFF read request to know if the AP read access was successful.
- The SW-DP implements a write buffer (for both DP or AP writes), that enables it to accept a write operation even when other transactions are still outstanding. If the write buffer is full, the target acknowledge response is “WAIT”. With the exception of

IDCODE read or CTRL/STAT read or ABORT write which are accepted even if the write buffer is full.

- Because of the asynchronous clock domains SWCLK and HCLK, two extra SWCLK cycles are needed after a write transaction (after the parity bit) to make the write effective internally. These cycles should be applied while driving the line low (IDLE state)
  This is particularly important when writing the CTRL/STAT for a power-up request. If the next transaction (requiring a power-up) occurs immediately, it will fail.

48.8.5 SW-DP registers

Access to these registers are initiated when APnDP=0

Table 336. SW-DP registers

A(3:2)	R/W	CTRLSEL bit of SELECT register	Register	Notes
00	Read	-	IDCODE	The manufacturer code is not set to ST code **0x2BA01477** (identifies the SW-DP)
00	Write	-	ABORT	-
01	Read/Write	0	DP-CTRL/STAT	Purpose is to: – request a system or debug power-up – configure the transfer operation for AP accesses – control the pushed compare and pushed verify operations. – read some status flags (overrun, power-up acknowledges)
01	Read/Write	1	WIRE CONTROL	Purpose is to configure the physical serial port protocol (like the duration of the turnaround time)
10	Read	-	READ RESEND	Enables recovery of the read data from a corrupted debugger transfer, without repeating the original AP transfer.
10	Write	-	SELECT	The purpose is to select the current access port and the active 4-words register window
11	Read/Write	-	READ BUFFER	This read buffer is useful because AP accesses are posted (the result of a read AP request is available on the next AP transaction). This read buffer captures data from the AP, presented as the result of a previous read, without initiating a new transaction

48.8.6 SW-AP registers

Access to these registers are initiated when APnDP=1

There are many AP Registers (see AHB-AP) addressed as the combination of:

- The shifted value A[3:2]
- The current value of the DP SELECT register

48.9 AHB-AP (AHB access port) - valid for both JTAG-DP and SW-DP

Features:

- System access is independent of the processor status.
- Either SW-DP or JTAG-DP accesses AHB-AP.
- The AHB-AP is an AHB master into the Bus Matrix. Consequently, it can access all the data buses (Dcode Bus, System Bus, internal and external PPB bus) but the ICode bus.
- Bitband transactions are supported.
- AHB-AP transactions bypass the FPB.

The address of the 32-bits AHP-AP resisters are 6-bits wide (up to 64 words or 256 bytes) and consists of:

c) Bits [7:4] = the bits [7:4] APBANKSEL of the DP SELECT register

d) Bits [3:2] = the 2 address bits of A(3:2) of the 35-bit packet request for SW-DP.

The AHB-AP of the Cortex®-M4 includes 9 x 32-bits registers:

Table 337. Cortex®-M4 AHB-AP registers

Address offset	Register name	Notes
0x00	AHB-AP Control and Status Word	Configures and controls transfers through the AHB interface (size, hprot, status on current transfer, address increment type
0x04	AHB-AP Transfer Address	-
0x0C	AHB-AP Data Read/Write	-
0x10	AHB-AP Banked Data 0	Directly maps the 4 aligned data words without rewriting the Transfer Address Register.
0x14	AHB-AP Banked Data 1	
0x18	AHB-AP Banked Data 2	
0x1C	AHB-AP Banked Data 3	
0xF8	AHB-AP Debug ROM Address	Base Address of the debug interface
0xFC	AHB-AP ID Register	-

Refer to the *Cortex®-M4 r0p1 TRM* for further details.

48.10 Core debug

Core debug is accessed through the core debug registers. Debug access to these registers is by means of the *Advanced High-performance Bus* (AHB-AP) port. The processor can access these registers directly over the internal *Private Peripheral Bus* (PPB).

It consists of 4 registers:

Table 338. Core debug registers

Register	Description
DHCSR	The 32-bit Debug Halting Control and Status Register: This provides status information about the state of the processor enable core debug halt and step the processor.
DCRSR	The 17-bit Debug Core Register Selector Register: This selects the processor register to transfer data to or from.
DCRDR	The 32-bit Debug Core Register Data Register: This holds data for reading and writing registers to and from the processor selected by the DCRSR (Selector) register.
DEMCR	The 32-bit Debug Exception and Monitor Control Register: This provides Vector Catching and Debug Monitor Control. This register contains a bit named ***TRCENA*** which enable the use of a TRACE.

Note: ***Important****: these registers are not reset by a system reset. They are only reset by a power-on reset.*

Refer to the *Cortex®-M4* r0p*1 TRM* for further details.

To Halt on reset, it is necessary to:

- enable the bit0 (VC_CORRESET) of the Debug and Exception Monitor Control Register
- enable the bit0 (C_DEBUGEN) of the Debug Halting Control and Status Register.

48.11 Capability of the debugger host to connect under system reset

The STM32L47x/L48x/L49x/L4Ax MCUs' reset system comprises the following reset sources:

- POR (power-on reset) which asserts a RESET at each power-up
- Internal watchdog reset
- Software reset
- External reset.

The Cortex®-M4 differentiates the reset of the debug part (generally PORRESETn) and the other one (SYSRESETn).

This way, it is possible for the debugger to connect under System Reset, programming the Core Debug Registers to halt the core when fetching the reset vector. Then the host can release the system reset and the core will immediately halt without having executed any instructions. In addition, it is possible to program any debug features under System Reset.

Note: It is highly recommended for the debugger host to connect (set a breakpoint in the reset vector) under system reset.

48.12 FPB (Flash patch breakpoint)

The FPB unit:

- implements hardware breakpoints
- patches code and data from code space to system space. This feature gives the possibility to correct software bugs located in the Code Memory Space.

The use of a Software Patch or a Hardware Breakpoint is exclusive.

The FPB consists of:

- 2 literal comparators for matching against literal loads from Code Space and remapping to a corresponding area in the System Space
- 6 instruction comparators for matching against instruction fetches from Code Space. They can be used either to remap to a corresponding area in the System Space or to generate a Breakpoint Instruction to the core.

48.13 DWT (data watchpoint trigger)

The DWT unit consists of four comparators. They are configurable as:

- a hardware watchpoint or
- a trigger to an ETM or
- a PC sampler or
- a data address sampler

The DWT also provides some means to give some profiling informations. For this, some counters are accessible to give the number of:

- Clock cycle
- Folded instructions
- Load store unit (LSU) operations
- Sleep cycles
- CPI (clock per instructions)
- Interrupt overhead

48.14 ITM (instrumentation trace macrocell)

48.14.1 General description

The ITM is an application-driven trace source that supports *printf* style debugging to trace *Operating System* (OS) and application events, and emits diagnostic system information. The ITM emits trace information as packets which can be generated as:

- **Software trace.** Software can write directly to the ITM stimulus registers to emit packets.
- **Hardware trace.** The DWT generates these packets, and the ITM emits them.
- **Time stamping.** Timestamps are emitted relative to packets. The ITM contains a 21-bit counter to generate the timestamp. The Cortex®-M4 clock or the bit clock rate of the *Serial Wire Viewer* (SWV) output clocks the counter.

The packets emitted by the ITM are output to the TPIU (Trace Port Interface Unit). The formatter of the TPIU adds some extra packets (refer to TPIU) and then output the complete packets sequence to the debugger host.

The bit TRCEN of the Debug Exception and Monitor Control Register must be enabled before you program or use the ITM.

48.14.2 Time stamp packets, synchronization and overflow packets

Time stamp packets encode time stamp information, generic control and synchronization. It uses a 21-bit timestamp counter (with possible prescalers) which is reset at each time stamp packet emission. This counter can be either clocked by the CPU clock or the SWV clock.

A synchronization packet consists of 6 bytes equal to 0x80_00_00_00_00_00 which is emitted to the TPIU as 00 00 00 00 00 80 (LSB emitted first).

A synchronization packet is a timestamp packet control. It is emitted at each DWT trigger.

For this, the DWT must be configured to trigger the ITM: the bit CYCCNTENA (bit0) of the DWT Control Register must be set. In addition, the bit2 (SYNCENA) of the ITM Trace Control Register must be set.

Note: If the SYNENA bit is not set, the DWT generates Synchronization triggers to the TPIU which will send only TPIU synchronization packets and not ITM synchronization packets.

An overflow packet consists is a special timestamp packets which indicates that data has been written but the FIFO was full.

Table 339. Main ITM registers

Address	Register	Details
@E0000FB0	ITM lock access	Write 0xC5ACCE55 to unlock Write Access to the other ITM registers

Table 339. Main ITM registers (continued)

Address	Register	Details
@E0000E80	ITM trace control	Bits 31-24 = Always 0
		Bits 23 = Busy
		Bits 22-16 = 7-bits ATB ID which identifies the source of the trace data
		Bits 15-10 = Always 0
		Bits 9:8 = TSPrescale = Time Stamp Prescaler
		Bits 7-5 = Reserved
		Bit 4 = SWOENA = Enable SWV behavior (to clock the timestamp counter by the SWV clock)
		Bit 3 = DWTENA: Enable the DWT Stimulus
		Bit 2 = SYNCENA: this bit must be to 1 to enable the DWT to generate synchronization triggers so that the TPIU can then emit the synchronization packets
		Bit 1 = TSENA (Timestamp Enable)
		Bit 0 = ITMENA: Global Enable Bit of the ITM
@E0000E40	ITM trace privilege	Bit 3: mask to enable tracing ports31:24
		Bit 2: mask to enable tracing ports23:16
		Bit 1: mask to enable tracing ports15:8
		Bit 0: mask to enable tracing ports7:0
@E0000E00	ITM trace enable	Each bit enables the corresponding Stimulus port to generate trace
@E0000000-E000007C	Stimulus port registers 0-31	Write the 32-bits data on the selected Stimulus Port (32 available) to be traced out

Example of configuration

To output a simple value to the TPIU:

- Configure the TPIU and assign TRACE I/Os by configuring the DBGMCU_CR (refer to *Section 48.17.2: TRACE pin assignment* and *Section 48.16.3: Debug MCU configuration register (DBGMCU_CR)*)
- Write 0xC5ACCE55 to the ITM Lock Access Register to unlock the write access to the ITM registers
- Write 0x00010005 to the ITM Trace Control Register to enable the ITM with Synchronous enabled and an ATB ID different from 0x00
- Write 0x1 to the ITM Trace Enable Register to enable the Stimulus Port 0
- Write 0x1 to the ITM Trace Privilege Register to unmask Stimulus Ports 7:0
- Write the value to output in the Stimulus Port Register 0: this can be done by software (using a printf function)

48.15 ETM (Embedded trace macrocell)

48.15.1 General description

The ETM enables the reconstruction of program execution. Data are traced using the Data Watchpoint and Trace (DWT) component or the Instruction Trace Macrocell (ITM) whereas instructions are traced using the Embedded Trace Macrocell (ETM).

The ETM transmits information as packets and is triggered by embedded resources. These resources must be programmed independently and the trigger source is selected using the Trigger Event Register (0xE0041008). An event could be a simple event (address match from an address comparator) or a logic equation between 2 events. The trigger source is one of the four comparators of the DWT module, The following events can be monitored:

- Clock cycle matching
- Data address matching

For more informations on the trigger resources refer to *Section 48.13: DWT (data watchpoint trigger)*.

The packets transmitted by the ETM are output to the TPIU (Trace Port Interface Unit). The formatter of the TPIU adds some extra packets (refer to *Section 48.17: TPIU (trace port interface unit)*) and then outputs the complete packet sequence to the debugger host.

48.15.2 Signal protocol, packet types

This part is described in the section 7 ETMv3 Signal Protocol of the Arm® IHI 0014N document.

48.15.3 Main ETM registers

For more information on registers refer to the chapter 3 of the Arm® IHI 0014N specification.

Table 340. Main ETM registers

Address	Register	Details
0xE0041FB0	ETM Lock Access	Write 0xC5ACCE55 to unlock the write access to the other ETM registers.
0xE0041000	ETM Control	This register controls the general operation of the ETM, for instance how tracing is enabled.
0xE0041010	ETM Status	This register provides information about the current status of the trace and trigger logic.
0xE0041008	ETM Trigger Event	This register defines the event that will control trigger.
0xE004101C	ETM Trace Enable Control	This register defines which comparator is selected.
0xE0041020	ETM Trace Enable Event	This register defines the trace enabling event.
0xE0041024	ETM Trace Start/Stop	This register defines the traces used by the trigger source to start and stop the trace, respectively.

48.15.4 Configuration example

To output a simple value to the TPIU:

- Configure the TPIU and enable the I/IO_TRACEN to assign TRACE I/Os in the STM32L47x/L48x/L49x/L4Ax debug configuration register
- Write 0xC5ACCE55 to the ETM Lock Access Register to unlock the write access to the ITM registers
- Write 0x00001D1E to the control register (configure the trace)
- Write 0000406F to the Trigger Event register (define the trigger event)
- Write 0000006F to the Trace Enable Event register (define an event to start/stop)
- Write 00000001 to the Trace Start/stop register (enable the trace)
- Write 0000191E to the ETM Control Register (end of configuration)

48.16 MCU debug component (DBGMCU)

The MCU debug component helps the debugger provide support for:

- Low-power modes
- Clock control for timers, watchdog, I^2C and bxCAN during a breakpoint
- Control of the trace pins assignment

48.16.1 Debug support for low-power modes

To enter low-power mode, the instruction WFI or WFE must be executed.

The MCU implements several low-power modes which can either deactivate the CPU clock or reduce the power of the CPU.

The core does not allow FCLK or HCLK to be turned off during a debug session. As these are required for the debugger connection, during a debug, they must remain active. The MCU integrates special means to allow the user to debug software in low-power modes.

For this, the debugger host must first set some debug configuration registers to change the low-power mode behavior:

- In Sleep mode, DBG_SLEEP bit of DBGMCU_CR register must be previously set by the debugger. This will feed HCLK with the same clock that is provided to FCLK (system clock previously configured by the software).
- In Stop mode, the bit DBG_STOP must be previously set by the debugger. This will enable the internal RC oscillator clock to feed FCLK and HCLK in Stop mode.
- In Standby mode, the bit DBG_STANDBY must be previously set by the debugger. This will keep the regulators on, and enable the internal RC oscillator clock to feed FCLK and HCLK in Standby mode. A system reset is generated internally so that exiting from Standby is identical than fetching from reset.

The DBGMCU_CR register can be written by the debugger under system reset. If the debugger host does not support these features, it is still possible to write this register by software.

48.16.2 Debug support for timers, RTC, watchdog, bxCAN and I^{2}C

During a breakpoint, it is necessary to choose how the counter of timers,RTC and watchdog should behave:

- They can continue to count inside a breakpoint. This is usually required when a PWM is controlling a motor, for example.
- They can stop to count inside a breakpoint. This is required for watchdog purposes.

For the bxCAN, the user can choose to block the update of the receive register during a breakpoint.

For the I^{2}C, the user can choose to block the SMBUS timeout during a breakpoint.

The DBGMCU freeze registers can be written by the debugger under system reset. If the debugger host does not support these features, it is still possible to write these registers by software.

48.16.3 Debug MCU configuration register (DBGMCU_CR)

Address: 0xE004 2004

Power-on reset: 0x0000 0000

System reset: not affected

Access: Only 32-bit access supported

31	30	29	28	27	26	25	24	23	22	21	20	19	18	17	16
Res.	Res.	Res.	Res.	Res.	Res.	Res.	Res.	Res.	Res.	Res.	Res.	Res.	Res.	Res.	Res.
15	**14**	**13**	**12**	**11**	**10**	**9**	**8**	**7**	**6**	**5**	**4**	**3**	**2**	**1**	**0**
Res.	Res.	Res.	Res.	Res.	Res.	Res.	Res.	TRACE_ MODE [1:0]		TRACE _ IOEN	Res.	Res.	DBG_ STAND BY	DBG_ STOP	DBG_ SLEEP
								rw	rw	rw			rw	rw	rw

Bits 31:8 Reserved, must be kept at reset value.

Bits 7:5 **TRACE_MODE[1:0] and TRACE_IOEN**: Trace pin assignment control

- With TRACE_IOEN=0:
  TRACE_MODE=xx: TRACE pins not assigned (default state)
- With TRACE_IOEN=1:
  - TRACE_MODE=00: TRACE pin assignment for Asynchronous Mode
  - TRACE_MODE=01: TRACE pin assignment for Synchronous Mode with a TRACEDATA size of 1
  - TRACE_MODE=10: TRACE pin assignment for Synchronous Mode with a TRACEDATA size of 2
  - TRACE_MODE=11: TRACE pin assignment for Synchronous Mode with a TRACEDATA size of 4

Bits 4:3 Reserved, must be kept at reset value.

Bit 2 **DBG_STANDBY:** Debug Standby mode

0: (FCLK=Off, HCLK=Off) The whole digital part is unpowered.
From software point of view, exiting from Standby is identical than fetching reset vector (except a few status bit indicated that the MCU is resuming from Standby)
1: (FCLK=On, HCLK=On) In this case, the digital part is not unpowered and FCLK and HCLK are provided by the internal RC oscillator which remains active. In addition, the MCU generate a system reset during Standby mode so that exiting from Standby is identical than fetching from reset.

Bit 1 **DBG_STOP:** Debug Stop mode

0: (FCLK=Off, HCLK=Off) In STOP mode, the clock controller disables all clocks (including HCLK and FCLK). When exiting from STOP mode, the clock configuration is identical to the one after RESET (CPU clocked by the 8 MHz internal RC oscillator (HSI16)). Consequently, the software must reprogram the clock controller to enable the PLL, the Xtal, etc.
1: (FCLK=On, HCLK=On) In this case, when entering STOP mode, FCLK and HCLK are provided by the internal RC oscillator which remains active in STOP mode. When exiting STOP mode, the software must reprogram the clock controller to enable the PLL, the Xtal, etc. (in the same way it would do in case of DBG_STOP=0)

Bit 0 **DBG_SLEEP:** Debug Sleep mode

0: (FCLK=On, HCLK=Off) In Sleep mode, FCLK is clocked by the system clock as previously configured by the software while HCLK is disabled.
In Sleep mode, the clock controller configuration is not reset and remains in the previously programmed state. Consequently, when exiting from Sleep mode, the software does not need to reconfigure the clock controller.
1: (FCLK=On, HCLK=On) In this case, when entering Sleep mode, HCLK is fed by the same clock that is provided to FCLK (system clock as previously configured by the software).

48.16.4 Debug MCU APB1 freeze register1(DBGMCU_APB1FZR1)

Address: 0xE004 2008

Power on reset (POR): 0x0000 0000

System reset: not affected

Access: Only 32-bit access are supported.

31	30	29	28	27	26	25	24	23	22	21	20	19	18	17	16
LPTIM1_STOP	Res.	Res.	Res.	Res.	DBG_CAN2_STOP	DBG_CAN1_STOP	Res.	DBG_I2C3_STOP	DBG_I2C2_STOP	DBG_I2C1_STOP	Res.	Res.	Res.	Res.	Res.
rw					rw	rw		rw	rw	rw					

15	14	13	12	11	10	9	8	7	6	5	4	3	2	1	0
Res.	Res.	Res.	DBG_IWDG_STOP	DBG_WWDG_STOP	DBG_RTC_STOP	Res.	Res.	Res.	Res.	DBG_TIM7_STOP	DBG_TIM6_STOP	DBG_TIM5_STOP	DBG_TIM4_STOP	DBG_TIM3_STOP	DBG_TIM2_STOP
			rw	rw	rw					rw	rw	rw	rw	rw	rw

Bit 31 **DBG_LPTIM1_STOP:** LPTIM1 counter stopped when core is halted
0: The counter clock of LPTIM1 is fed even if the core is halted
1: The counter clock of LPTIM1 is stopped when the core is halted

Bits 30:27 Reserved, must be kept at reset value.

Bit 26 **DBG_CAN2_STOP:** bxCAN2 stopped when core is halted (this is bit is reserved on STM32L47x/L48x devices, must be kept at reset value)
0: Same behavior as in normal mode
1: The bxCAN2 receive registers are frozen

Bit 25 **DBG_CAN1_STOP:** bxCAN1 stopped when core is halted
0: Same behavior as in normal mode
1: The bxCAN1 receive registers are frozen

Bit 24 Reserved, must be kept at reset value.

Bit 23 **DBG_I2C3_STOP:** I2C3 SMBUS timeout counter stopped when core is halted
0: Same behavior as in normal mode
1: The I2C3 SMBus timeout is frozen

Bit 22 **DBG_I2C2_STOP:** I2C2 SMBUS timeout counter stopped when core is halted
0: Same behavior as in normal mode
1: The I2C2 SMBus timeout is frozen

Bit 21 **DBG_I2C1_STOP:** I2C1 SMBUS timeout counter stopped when core is halted
0: Same behavior as in normal mode
1: The I2C1 SMBus timeout is frozen

Bits 20:13 Reserved, must be kept at reset value.

Bit 12 **DBG_IWDG_STOP:** Independent watchdog counter stopped when core is halted
0: The independent watchdog counter clock continues even if the core is halted
1: The independent watchdog counter clock is stopped when the core is halted

Bit 11 **DBG_WWDG_STOP:** Window watchdog counter stopped when core is halted
0: The window watchdog counter clock continues even if the core is halted
1: The window watchdog counter clock is stopped when the core is halted

Bit 10 **DBG_RTC_STOP:** RTC counter stopped when core is halted
0: The clock of the RTC counter is fed even if the core is halted
1: The clock of the RTC counter is stopped when the core is halted

Bits 9:6 Reserved, must be kept at reset value.

Bit 5 **DBG_TIM7_STOP**: TIM7 counter stopped when core is halted
0: The counter clock of TIM7 is fed even if the core is halted
1: The counter clock of TIM7 is stopped when the core is halted

Bit 4 **DBG_TIM6_STOP**: TIM6 counter stopped when core is halted
0: The counter clock of TIM6 is fed even if the core is halted
1: The counter clock of TIM6 is stopped when the core is halted

Bit 3 **DBG_TIM5_STOP**: TIM5 counter stopped when core is halted
0: The counter clock of TIM5 is fed even if the core is halted
1: The counter clock of TIM5 is stopped when the core is halted

Bit 2 **DBG_TIM4_STOP**: TIM4 counter stopped when core is halted
0: The counter clock of TIM4 is fed even if the core is halted
1: The counter clock of TIM4 is stopped when the core is halted

Bit 1 **DBG_TIM3_STOP**: TIM3 counter stopped when core is halted
0: The counter clock of TIM3 is fed even if the core is halted
1: The counter clock of TIM3 is stopped when the core is halted

Bit 0 **DBG_TIM2_STOP:** TIM2 counter stopped when core is halted
0: The counter clock of TIM2 is fed even if the core is halted
1: The counter clock of TIM2 is stopped when the core is halted

48.16.5 Debug MCU APB1 freeze register 2 (DBGMCU_APB1FZR2)

Address: 0xE004 200C

Power on reset (POR): 0x0000 0000

System reset: not affected

Access: Only 32-bit access are supported.

31	30	29	28	27	26	25	24	23	22	21	20	19	18	17	16
Res.	Res.	Res.	Res.	Res.	Res.	Res.	Res.	Res.	Res.	Res.	Res.	Res.	Res.	Res.	Res.
15	**14**	**13**	**12**	**11**	**10**	**9**	**8**	**7**	**6**	**5**	**4**	**3**	**2**	**1**	**0**
Res.	Res.	Res.	Res.	Res.	Res.	Res.	Res.	Res.	Res.	DBG_LPTIM2_STOP	Res.	Res.	Res.	DBG_I2C4_STOP	Res.
										rw				rw	

Bits 31:6 Reserved, must be kept at reset value.

Bit 5 **DBG_LPTIM2_STOP:** LPTIM2 counter stopped when core is halted
0: The counter clock of LPTIM2 is fed even if the core is halted
1: The counter clock of LPTIM2 is stopped when the core is halted

Bits 4:2 Reserved, must be kept at reset value.

Bit 1 **DBG_I2C4_STOP:** I2C4 SMBUS timeout counter stopped when core is halted (this bit is reserved on STM32L47x/L48x devices, must be kept at reset value)
0: Same behavior as in normal mode
1: The I2C4 SMBus timeout is frozen

Bit 0 Reserved, must be kept at reset value.

48.16.6 Debug MCU APB2 freeze register (DBGMCU_APB2FZR)

Address: 0xE004 2010

Power on reset (POR): 0x0000 0000

System reset: not affected

Access: Only 32-bit access are supported.

31	30	29	28	27	26	25	24	23	22	21	20	19	18	17	16
Res.	Res.	Res.	Res.	Res.	Res.	Res.	Res.	Res.	Res.	Res.	Res.	Res.	DBG_TIM17_STOP	DBG_TIM16_STOP	DBG_TIM15_STOP
													rw	rw	rw

15	14	13	12	11	10	9	8	7	6	5	4	3	2	1	0
Res.	Res.	DBG_TIM8_STOP	Res.	DBG_TIM1_STOP	Res.	Res.	Res.	Res.	Res.	Res.	Res.	Res.	Res.	Res.	Res.
		rw		rw											

Bits 31:19 Reserved, must be kept at reset value.

Bit 18 **DBG_TIM17_STOP:** TIM17 counter stopped when core is halted
0: The clock of the TIM17 counter is fed even if the core is halted
1: The clock of the TIM17 counter is stopped when the core is halted

Bit 17 **DBG_TIM16_STOP:** TIM16 counter stopped when core is halted
0: The clock of the TIM16 counter is fed even if the core is halted
1: The clock of the TIM16 counter is stopped when the core is halted

Bit 16 **DBG_TIM15_STOP:** TIM15 counter stopped when core is halted
0: The clock of the TIM15 counter is fed even if the core is halted
1: The clock of the TIM15 counter is stopped when the core is halted

Bits 15:14 Reserved, must be kept at reset value.

Bit 13 **DBG_TIM8_STOP:** TIM8 counter stopped when core is halted
0: The clock of the TIM8 counter is fed even if the core is halted
1: The clock of the TIM8 counter is stopped when the core is halted

Bit 12 Reserved, must be kept at reset value.

Bit 11 **DBG_TIM1_STOP:** TIM1 counter stopped when core is halted
0: The clock of the TIM1 counter is fed even if the core is halted
1: The clock of the TIM1 counter is stopped when the core is halted

Bits 10:0 Reserved, must be kept at reset value.

48.17 TPIU (trace port interface unit)

48.17.1 Introduction

The TPIU acts as a bridge between the on-chip trace data from the ITM and the ETM.

The output data stream encapsulates the trace source ID, that is then captured by a *trace port analyzer* (TPA).

The core embeds a simple TPIU, especially designed for low-cost debug (consisting of a special version of the CoreSight TPIU).

Figure 558. TPIU block diagram

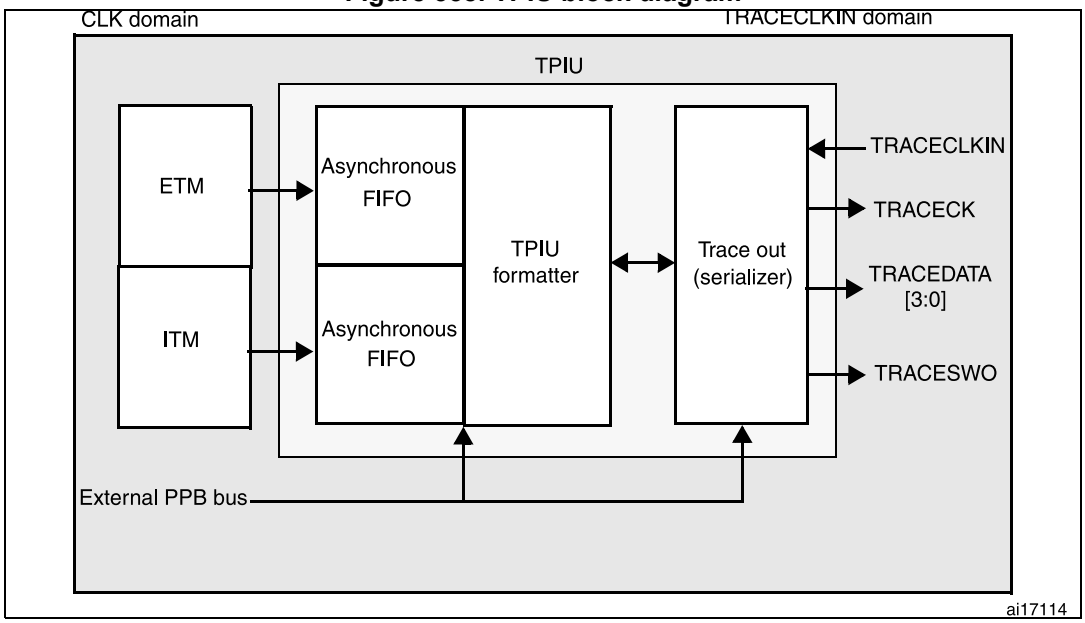

48.17.2 TRACE pin assignment

- Asynchronous mode

  The asynchronous mode requires 1 extra pin and is available on all packages. It is only available if using Serial Wire mode (not in JTAG mode).

Table 341. Asynchronous TRACE pin assignment

TPUI pin name	Trace synchronous mode		STM32L47x/L48x/ L49x/L4Ax pin assignment
	Type	Description	
TRACESWO	O	TRACE Asynchronous Data Output	PB3

- Synchronous mode

  The synchronous mode requires from 2 to 6 extra pins depending on the data trace size and is only available in the larger packages. In addition it is available in JTAG mode and in Serial Wire mode and provides better bandwidth output capabilities than asynchronous trace.

Table 342. Synchronous TRACE pin assignment

TPUI pin name	Trace synchronous mode		STM32L47x/L48x/ L49x/L4Ax pin assignment
	Type	Description	
TRACECK	O	TRACE Clock	PE2
TRACED[3:0]	O	TRACE Synchronous Data Outputs Can be 1, 2 or 4.	PE[6:3] PC1, PC8, PD2, PC12(1)

1. PC1, PC8, PD2, PC12 only for STM32L49x/L4Ax devices

TPUI TRACE pin assignment

By default, these pins are NOT assigned. They can be assigned by setting the TRACE_IOEN and TRACE_MODE bits in the *Debug MCU configuration register (DBGMCU_CR)*. This configuration has to be done by the debugger host.

In addition, the number of pins to assign depends on the trace configuration (asynchronous or synchronous).

- **Asynchronous mode**: 1 extra pin is needed
- **Synchronous mode**: from 2 to 5 extra pins are needed depending on the size of the data trace port register (1, 2 or 4) :
  - TRACECK
  - TRACED(0) if port size is configured to 1, 2 or 4
  - TRACED(1) if port size is configured to 2 or 4
  - TRACED(2) if port size is configured to 4
  - TRACED(3) if port size is configured to 4

To assign the TRACE pin, the debugger host must program the bits TRACE_IOEN and TRACE_MODE[1:0] of the *Debug MCU configuration register (DBGMCU_CR)*. By default the TRACE pins are not assigned.

This register is mapped on the external PPB and is reset by the PORESET (and not by the SYSTEM reset). It can be written by the debugger under SYSTEM reset.

Table 343. Flexible TRACE pin assignment

DBGMCU_CR register		Pins assigned for:	TRACE IO pin assigned					
TRACE _IOEN	TRACE _MODE [1:0]		PB3 / JTDO/ TRACESWO	PE2 / TRACECK	PE3 or PC1(1)/ TRACED[0]	PE4 or PC8(1)/ TRACED[1]	PE5 or PD2(1)/ TRACED[2]	PE6 or PC12(1)/ TRACED[3]
0	XX	No Trace (default state)	Released (2)	-				
1	00	Asynchronous Trace	TRACESWO	-	-	Released (usable as GPIO)		

Table 343. Flexible TRACE pin assignment (continued)

DBGMCU_CR register		Pins assigned for:	TRACE IO pin assigned					
TRACE _IOEN	**TRACE _MODE [1:0]**		**PB3** / JTDO/ TRACESWO	**PE2** / TRACECK	**PE3 or PC1(1)**/ TRACED[0]	**PE4 or PC8(1)**/ TRACED[1]	**PE5 or PD2(1)**/ TRACED[2]	**PE6 or PC12(1)**/ TRACED[3]
1	01	Synchronous Trace 1 bit	Released (2)	TRACECK	TRACED[0]	-	-	-
1	10	Synchronous Trace 2 bit		TRACECK	TRACED[0]	TRACED[1]	-	-
1	11	Synchronous Trace 4 bit		TRACECK	TRACED[0]	TRACED[1]	TRACED[2]	TRACED[3]

1. Only for STM32L49x/L4Ax devices.
2. When Serial Wire mode is used, it is released, but when JTAG is used, it is assigned to JTDO.

Note: By default, the TRACECLKIN input clock of the TPIU is tied to GND. It is assigned to HCLK two clock cycles after the bit TRACE_IOEN has been set.

The debugger must then program the Trace Mode by writing the PROTOCOL[1:0] bits in the SPP_R (Selected Pin Protocol) register of the TPIU.

- PROTOCOL=00: Trace Port Mode (synchronous)
- PROTOCOL=01 or 10: Serial Wire (Manchester or NRZ) Mode (asynchronous mode). Default state is 01

It then also configures the TRACE port size by writing the bits [3:0] in the CPSPS_R (Current Synchronous Port Size Register) of the TPIU:

- 0x1 for 1 pin (default state)
- 0x2 for 2 pins
- 0x8 for 4 pins

48.17.3 TPUI formatter

The formatter protocol outputs data in 16-byte frames:

- seven bytes of data
- eight bytes of mixed-use bytes consisting of:
  - 1 bit (LSB) to indicate it is a DATA byte (‘0) or an ID byte (‘1).
  - 7 bits (MSB) which can be data or change of source ID trace.
- one byte of auxiliary bits where each bit corresponds to one of the eight mixed-use bytes:
  - if the corresponding byte was a data, this bit gives bit0 of the data.
  - if the corresponding byte was an ID change, this bit indicates when that ID change takes effect.

Note: Refer to the Arm® CoreSight Architecture Specification v1.0 (Arm IHI 0029B) for further information

48.17.4 TPUI frame synchronization packets

The TPUI can generate two types of synchronization packets:

- The Frame Synchronization packet (or Full Word Synchronization packet)

  It consists of the word: 0x7F_FF_FF_FF (LSB emitted first). This sequence can not occur at any other time provided that the ID source code 0x7F has not been used.

  It is output periodically ***between*** frames.

  In continuous mode, the TPA must discard all these frames once a synchronization frame has been found.
- The Half-Word Synchronization packet

  It consists of the half word: 0x7F_FF (LSB emitted first).

  It is output periodically ***between or within*** frames.

  These packets are only generated in continuous mode and enable the TPA to detect that the TRACE port is in IDLE mode (no TRACE to be captured). When detected by the TPA, it must be discarded.

48.17.5 Transmission of the synchronization frame packet

There is no Synchronization Counter register implemented in the TPIU of the core. Consequently, the synchronization trigger can only be generated by the **DWT**. Refer to the registers DWT Control Register (bits SYNCTAP[11:10]) and the DWT Current PC Sampler Cycle Count Register.

The TPUI Frame synchronization packet (0x7F_FF_FF_FF) is emitted:

- after each TPIU reset release. This reset is synchronously released with the rising edge of the TRACECLKIN clock. This means that this packet is transmitted when the TRACE_IOEN bit in the DBGMCU_CFG register is set. In this case, the word 0x7F_FF_FF_FF is not followed by any formatted packet.
- at each DWT trigger (assuming DWT has been previously configured). Two cases occur:
  - If the bit SYNENA of the ITM is reset, only the word 0x7F_FF_FF_FF is emitted without any formatted stream which follows.
  - If the bit SYNENA of the ITM is set, then the ITM synchronization packets will follow (0x80_00_00_00_00_00), formatted by the TPUI (trace source ID added).

48.17.6 Synchronous mode

The trace data output size can be configured to 4, 2 or 1 pin: TRACED(3:0)

The output clock is output to the debugger (TRACECK)

Here, TRACECLKIN is driven internally and is connected to HCLK only when TRACE is used.

Note: In this synchronous mode, it is not required to provide a stable clock frequency.

The TRACE I/Os (including TRACECK) are driven by the rising edge of TRACLKIN (equal to HCLK). Consequently, the output frequency of TRACECK is equal to HCLK/2.

48.17.7 Asynchronous mode

This is a low cost alternative to output the trace using only 1 pin: this is the asynchronous output pin TRACESWO. Obviously there is a limited bandwidth.

TRACESWO is multiplexed with JTDO when using the SW-DP pin. This way, this functionality is available in all STM32L47x/L48x/L49x/L4Ax packages.

This asynchronous mode requires a constant frequency for TRACECLKIN. For the standard UART (NRZ) capture mechanism, 5% accuracy is needed. The Manchester encoded version is tolerant up to 10%.

48.17.8 TRACECLKIN connection inside the STM32L47x/L48x/L49x/L4Ax

In the STM32L47x/L48x/L49x/L4Ax, this TRACECLKIN input is internally connected to HCLK. This means that when in asynchronous trace mode, the application is restricted to use time frames where the CPU frequency is stable.

Note: ***Important:*** *when using asynchronous trace: it is important to be aware that:*

The default clock of the STM32L47x/L48x/L49x/L4Ax MCUs is the internal RC oscillator. Its frequency under reset is different from the one after reset release. This is because the RC calibration is the default one under system reset and is updated at each system reset release.

Consequently, the trace port analyzer (TPA) should not enable the trace (with the TRACE_IOEN bit) under system reset, because a Synchronization Frame Packet will be issued with a different bit time than trace packets which will be transmitted after reset release.

48.17.9 TPIU registers

The TPIU APB registers can be read and written only if the bit TRCENA of the Debug Exception and Monitor Control Register (DEMCR) is set. Otherwise, the registers are read as zero (the output of this bit enables the PCLK of the TPIU).

Table 344. Important TPIU registers

Address	Register	Description
0xE0040004	Current port size	Allows the trace port size to be selected: Bit 0: Port size = 1 Bit 1: Port size = 2 Bit 2: Port size = 3, not supported Bit 3: Port Size = 4 Only 1 bit must be set. By default, the port size is one bit. (0x00000001)
0xE00400F0	Selected pin protocol	Allows the Trace Port Protocol to be selected: Bit1:0 = 00: Synchronous Trace Port Mode 01: Serial Wire Output - manchester (default value) 10: Serial Wire Output - NRZ 11: reserved
0xE0040304	Formatter and flush control	Bit 31-9 = always ‘0’ Bit 8 = TrigIn = always ‘1’ to indicate that triggers are indicated Bit 7-4 = always 0 Bit 3-2 = always 0 Bit 1 = EnFCont. In Synchronous Trace mode (Select_Pin_Protocol register bit1:0 = 00), this bit is forced to ‘1’: the formatter is automatically enabled in continuous mode. In asynchronous mode (Select_Pin_Protocol register bit1:0 <> 00), this bit can be written to activate or not the formatter. Bit 0 = always ‘0’ The resulting default value is 0x102 **Note:** In synchronous mode, because the TRACECTL pin is not mapped outside the chip, the formatter is always enabled in continuous mode; this way the formatter inserts some control packets to identify the source of the trace packets).
0xE0040300	Formatter and flush status	Not used in Cortex®-M4, always read as 0x00000008

48.17.10 Example of configuration

- Set the bit TRCENA in the Debug Exception and Monitor Control Register (DEMCR)
- Write the TPIU Current Port Size Register to the desired value (default is 0x1 for a 1-bit port size)
- Write TPIU Formatter and Flush Control Register to 0x102 (default value)
- Write the TPIU Select Pin Protocol to select the synchronous or asynchronous mode. Example: 0x2 for asynchronous NRZ mode (UART like)
- Write the DBGMCU control register to 0x20 (bit IO_TRACEN) to assign TRACE I/Os for asynchronous mode. A TPIU Synchronous packet is emitted at this time (FF_FF_FF_7F)
- Configure the ITM and write the ITM Stimulus register to output a value

48.18 DBG register map

The following table summarizes the Debug registers

Table 345. DBG register map and reset values

Addr.	Register	31	30	29	28	27	26	25	24	23	22	21	20	19	18	17	16	15	14	13	12	11	10	9	8	7	6	5	4	3	2	1	0
0xE0042000	DBGMCU_ IDCODE	REV_ID																Res.	Res.	Res.	Res.	DEV_ID											
	Reset value(1)	X	X	X	X	X	X	X	X	X	X	X	X	X	X	X	X					X	X	X	X	X	X	X	X	X	X	X	X
0xE0042004	DBGMCU_CR	Res.	Res.	Res.	Res.	Res.	Res.	Res.	Res.	Res.	Res.	Res.	Res.	Res.	Res.	Res.	Res.	Res.	Res.	Res.	Res.	Res.	Res.	Res.	Res.	TRACE_MODE[1:0]		TRACE_IOEN	Res.	Res.	DBG_STANDBY	DBG_STOP	DBG_SLEEP
	Reset value																									0	0	0			0	0	0
0xE004 2008	DBGMCU_ APB1FZR1	DBG_LPTIM1_STOP	Res.	Res.	Res.	Res.	DBG_CAN2_STOP	DBG_CAN1_STOP	Res.	DBG_I2C3_STOP	DBG_I2C2_STOP	DBG_I2C1_STOP	Res.	Res.	Res.	Res.	Res.	Res.	Res.	Res.	DBG_IWDG_STOP	DBG_WWDG_STOP	DBG_RTC_STOP	Res.	Res.	Res.	Res.	DBG_TIM7_STOP	DBG_TIM6_STOP	DBG_TIM5_STOP	DBG_TIM4_STOP	DBG_TIM3_STOP	DBG_TIM2_STOP
	Reset value	0						0		0	0	0									0	0	0					0	0	0	0	0	0
0xE004 200C	DBGMCU_ APB1FZR2	Res.	Res.	Res.	Res.	Res.	Res.	Res.	Res.	Res.	Res.	Res.	Res.	Res.	Res.	Res.	Res.	Res.	Res.	Res.	Res.	Res.	Res.	Res.	Res.	Res.	Res.	DBG_LPTIM2_STOP	Res.	Res.	Res.	DBG_I2C4_STOP	Res.
	Reset value																											0					
0xE004 2010	DBGMCU_ APB2FZR	Res.	Res.	Res.	Res.	Res.	Res.	Res.	Res.	Res.	Res.	Res.	Res.	Res.	DBG_TIM17_STOP	DBG_TIM16_STOP	DBG_TIM15_STOP	Res.	Res.	DBG_TIM8_STOP	Res.	DBG_TIM1_STOP	Res.	Res.	Res.	Res.	Res.	Res.	Res.	Res.	Res.	Res.	Res.
	Reset value														0	0	0			0		0											

1. The reset value is product dependent. For more information, refer to *Section 48.6.1: MCU device ID code*.

49 Device electronic signature

The device electronic signature is stored in the System memory area of the Flash memory module, and can be read using the debug interface or by the CPU. It contains factory-programmed identification and calibration data that allow the user firmware or other external devices to automatically match to the characteristics of the STM32L47x/L48x/L49x/L4Ax microcontroller.

49.1 Unique device ID register (96 bits)

The unique device identifier is ideally suited:

- for use as serial numbers (for example USB string serial numbers or other end applications)
- for use as part of the security keys in order to increase the security of code in Flash memory while using and combining this unique ID with software cryptographic primitives and protocols before programming the internal Flash memory
- to activate secure boot processes, etc.

The 96-bit unique device identifier provides a reference number which is unique for any device and in any context. These bits cannot be altered by the user.

Base address: 0x1FFF 7590

Address offset: 0x00

Read only = 0xXXXX XXXX where X is factory-programmed

31	30	29	28	27	26	25	24	23	22	21	20	19	18	17	16
UID[31:16]															
r	r	r	r	r	r	r	r	r	r	r	r	r	r	r	r
15	14	13	12	11	10	9	8	7	6	5	4	3	2	1	0
UID[15:0]															
r	r	r	r	r	r	r	r	r	r	r	r	r	r	r	r

Bits 31:0 **UID[31:0]:** X and Y coordinates on the wafer

Address offset: 0x04

Read only = 0xXXXX XXXX where X is factory-programmed

31	30	29	28	27	26	25	24	23	22	21	20	19	18	17	16
UID[63:48]															
r	r	r	r	r	r	r	r	r	r	r	r	r	r	r	r
15	14	13	12	11	10	9	8	7	6	5	4	3	2	1	0
UID[47:32]															
r	r	r	r	r	r	r	r	r	r	r	r	r	r	r	r

Bits 31:8 **UID[63:40]:** LOT_NUM[23:0]
Lot number (ASCII encoded)

Bits 7:0 **UID[39:32]:** WAF_NUM[7:0]
Wafer number (8-bit unsigned number)

Address offset: 0x08

Read only = 0xXXXX XXXX where X is factory-programmed

31	30	29	28	27	26	25	24	23	22	21	20	19	18	17	16
UID[95:80]															
r	r	r	r	r	r	r	r	r	r	r	r	r	r	r	r
15	14	13	12	11	10	9	8	7	6	5	4	3	2	1	0
UID[79:64]															
r	r	r	r	r	r	r	r	r	r	r	r	r	r	r	r

Bits 31:0 **UID[95:64]:** LOT_NUM[55:24]
Lot number (ASCII encoded)

49.2 Flash size data register

Base address: 0x1FFF 75E0

Address offset: 0x00

Read only = 0xXXXX where X is factory-programmed

15	14	13	12	11	10	9	8	7	6	5	4	3	2	1	0
FLASH_SIZE															
r	r	r	r	r	r	r	r	r	r	r	r	r	r	r	r

Bits 15:0 **FLASH_SIZE[15:0]**: Flash memory size
This bitfield indicates the size of the device Flash memory expressed in Kbytes.
As an example, 0x040 corresponds to 64 Kbytes.

49.3 Package data register

Base address: 0x1FFF 7500

Address offset: 0x00

Read only = 0xXXXX where X is factory-programmed

15	14	13	12	11	10	9	8	7	6	5	4	3	2	1	0
Res.	Res.	Res.	Res.	Res.	Res.	Res.	Res.	Res.	Res.	Res.	PKG[4:0]				
											r	r	r	r	r

Bits 15:5 Reserved, must be kept at reset value

Bits 4:0 **PKG[4:0]**: Package type

00000: LQFP64
00010: LQFP100
00011: UFBGA132
00100: LQFP144, UFBGA144, WLCSP81 or WLCSP72
10000: UFBGA169
10001: WLCSP100
Others: reserved
Refer to product datasheet for availability of packages on a specific device.

50 Revision history

Table 346. Document revision history

Date	Revision	Changes
28-May-2015	1	Initial release.
15-Oct-2015	2	PWR Updated *Section 5.1: Power supplies*. Updated *Section : Entering the Low-power run mode*. Updated *Table 25: Sleep*. Updated *Table 26: Low-power sleep*. Updated *Table 27: Stop 0 mode*. Updated *Table 29: Stop 2 mode*. Updated *Table 27: Stop 0 mode*. Renamed bit EIWF into EIWUL in *Section 5.4.3: Power control register 3 (PWR_CR3)*. GPIO Updated OSPEEDy[1:0] definition in *Section 8.5.3: GPIO port output speed register (GPIOx_OSPEEDR) (x = A to I)*. FMC Updated *Section : SRAM/NOR-Flash chip-select timing register for bank x (FMC_BTRx)*. Updated *Section : SRAM/NOR-Flash write timing registers x (FMC_BWTRx)*. ADC Updated *Figure 70: ADC3 connectivity*. Updated *Section 18.4.17: Stopping an ongoing conversion (ADSTP, JADSTP)*. Added formula in *Bullet*. VREFBUF Updated *Table 141: VREF buffer modes*. DFSDM Updated clock range in *SPI data input format operation* and *Manchester coded data input format operation*. LCD Updated *Section 25.2: LCD main features*. TSC Updated *Table 170: Spread spectrum deviation versus AHB clock frequency*. Updated *Table 172: Effect of low-power modes on TSC*. TIM2/TIM3/TIM4/TIM5 Updated *Bullet* in *Table 31.3.13: One-pulse mode*.

Table 346. Document revision history (continued)

Date	Revision	Changes
15-Oct-2015	2 (continued)	I2C Updated *Section 39.4.5: I2C initialization*, including *Figure 390: Setup and hold timings*. Updated *Section 39.7.5: I2C timing register (I2C_TIMINGR)*. SPI Updated *Figure 456: Full-duplex single master/ single slave application*, *Figure 457: Half-duplex single master/ single slave application*, *Figure 458: Simplex single master/single slave application (master in transmit-only/ slave in receive-only mode)* and *Figure 459: Master and three independent slaves*. Notes updated and added below *Figure 456: Full-duplex single master/ single slave application*, *Figure 457: Half-duplex single master/ single slave application*, *Figure 458: Simplex single master/single slave application (master in transmit-only/ slave in receive-only mode)*. Added *Section 42.4.4: Multi-master communication*. UART Updated *The RTO counter starts counting: on page 1372*. Added *Determining the maximum USART baud rate allowing to wakeup correctly from Stop mode when the USART clock source is the HSI clock*. Removed TXFRQ bit in *Table 261: LPUART register map and reset values*. DEBUG Updated *DBGMCU_IDCODE*.

Table 346. Document revision history (continued)

Date	Revision	Changes
08-Dec-2015	3	In all the document: – Stop 1 with main regulator becomes Stop 0 – Stop 1 with low-power regulator remains as Stop 1 MEM Updated SAI1 and SAI2 base address in *Table 2: STM32L49x/L4Ax devices memory map and peripheral register boundary addresses*. MMAP Added *Table 5: Memory mapping versus boot mode/physical remap*. FLASH Added *If the flash is attempted to be written in Fast programming mode while a read operation is on going in the same bank, the programming is aborted without any system notification (no error flag is set)*.. PWR Updated *Table 23: Functionalities depending on the working mode*. RCC Updated WWDGEN bit description and access mode in *Section 6.4.19: APB1 peripheral clock enable register 1 (RCC_APB1ENR1)*. NVIC Updated *Figure 34: External interrupt/event GPIO mapping*. Updated reset value in *Section 14.5.7: Interrupt mask register 2 (EXTI_IMR2)*.

Table 346. Document revision history (continued)

Date	Revision	Changes
08-Dec-2015	3 (continued)	FMC Updated BUSTURN bit description in *Section : SRAM/NOR-Flash chip-select timing register for bank x (FMC_BTRx)*. ADC Updated VDDA in *Table 105: ADC input/output pins*. DAC Added *Section : Example of the sample and refresh time calculation with output buffer on*. Updated *Table 127: Effect of low-power modes on DAC*. COMP Updated *Table 147: Comparator behavior in the low power modes*. OPAMP Updated *Table 152: Effect of low-power modes on the OPAMP*. Added *Note*. LCD Updated *Table 166: LCD behavior in low-power modes*. TSC Added note in *Section 26.3.4: Charge transfer acquisition sequence*. Updated *Table 172: Effect of low-power modes on TSC*. Added notes in CTPL and PGPSC bit description in *Section 26.6.1: TSC control register (TSC_CR)*. TIM1/TIM8 Updated *Section 30.3.21: Retriggerable one pulse mode (OPM)*. Updated SMS bit description in *Section 30.4.3: TIMx slave mode control register (TIMx_SMCR)(x = 1, 8)*. Updated reset value to 0xFFFF in *Section 30.4.14: TIMx auto-reload register (TIMx_ARR)(x = 1, 8)*. TIM2/TIM3/TIM4/TIM5 Added *Section 31.3.14: Retriggerable one pulse mode (OPM)*. Updated SMS bitfield description in *Section 31.4.3: TIMx slave mode control register (TIMx_SMCR)(x = 2 to 5)*. Updated CC1IF bit description in *Section 31.4.5: TIMx status register (TIMx_SR)(x = 2 to 5)*. Updated reset value to 0xFFFF in *Section 31.4.15: TIMx auto-reload register (TIMx_ARR)(x = 2 to 5)*. TIM15/TIM16/TIM17 Updated *Section 32.5.18: External trigger synchronization (TIM15 only)*. Removed bit CC2NE from *Section 32.6.9: TIM15 capture/compare enable register (TIM15_CCER)*. Removed bit TIE from *Section 32.7.3: TIMx DMA/interrupt enable register (TIMx_DIER)(x = 16 to 17)*.

Table 346. Document revision history (continued)

Date	Revision	Changes
08-Dec-2015	3 (continued)	Removed bit TIF from *Section 32.7.4: TIMx status register (TIMx_SR)(x = 16 to 17)*. Removed bit TG from *Section 32.7.5: TIMx event generation register (TIMx_EGR)(x = 16 to 17)*. Updated reset value to 0xFFFF in *Section 32.7.11: TIMx auto-reload register (TIMx_ARR)(x = 16 to 17)*. TIM6/TIM7 Updated reset value to 0xFFFF in *Section 33.4.8: TIMx auto-reload register (TIMx_ARR)(x = 6 to 7)* LPTIM Added *Section 34.5: LPTIM low-power modes*. RTC Updated reference to TAMPTS bit in *Section 38.3.13: Time-stamp function*. Updated *Table 224: Effect of low-power modes on RTC*. I2C Updated *Table 243: Effect of low-power modes on the I2C*. Updated *Table 228: STM32L47x/L48x devices I2C implementation*. USART Replaced nCTS by CTS - nRTS by RTS - SCLK by CK. Replaced "w" by "rc_w1" in *Section 40.8.9: USART interrupt flag clear register (USART_ICR)*. Updated *Table 252: Effect of low-power modes on the USART*. Updated RTOF bit description in *Section 40.8.8: USART interrupt and status register (USART_ISR)*. LPUART Replaced nCTS by CTS - nRTS by RTS. Updated *Table 259: Effect of low-power modes on the LPUART*. SWPMI Updated *Table 275: Effect of low-power modes on SWPMI*. SDMMC Updated limit from 48 to 50 MHz in *Section 45.1: SDMMC main features*, *Section 45.3: SDMMC functional description*, *Section 45.8.1: SDMMC power control register (SDMMC_POWER)*, *Section 45.8.2: SDMMC clock control register (SDMMC_CLKCR)* and in *Section 45.8.4: SDMMC command register (SDMMC_CMD)*. USB Updated *Section : Choosing the value of TRDT in OTG_GUSBCFG*.

Table 346. Document revision history (continued)

Date	Revision	Changes
08-Dec-2015	3 (continued)	Updated TRDT bit description in *Section 47.15.4: OTG USB configuration register (OTG_GUSBCFG)*. Added *Table 318: TRDT values(FS)*. Updated access type of bit PENA in *Section 47.15.26: OTG Host port control and status register (OTG_HPRT)*. Changed bit 15 to reserved in *Section 47.15.32: OTG device configuration register (OTG_DCFG)*. DEBUG Updated REV_ID description in *Section 48.6.1: MCU device ID code*. SIGNATURE Updated UID in *Section 49.1: Unique device ID register (96 bits)*.
03-Jun-2016	4	FLASH: Updated *Section 2.6: Boot configuration*. Added *Caution:*. Added *Note:*. FIREWALL: Updated *Section 4.4.6: Volatile data segment length (FW_VDSL)*. RCC: Updated *Section 6.2.11: Clock security system on LSE*. Updated *Section 6.2.14: RTC clock*. EXTI: Updated EXTI_IMR2 in *Table 59: Extended interrupt/event controller register map and reset values*. DMA: Updated *Table 43: Programmable data width & endianness (when bits PINC = MINC = 1)*. Updated *Section 11.5.2: DMA interrupt flag clear register (DMA_IFCR)*. Updated *Section 11.5.4: DMA channel x number of data register (DMA_CNDTRx) (x = 1..7, where x = channel number)*. CRC: Fixed IDR bitfield length in *Section 15.4.2: Independent data register (CRC_IDR)*. FSMC: Updated *Section 16.3: AHB interface* introduction. Updated BUSTURN bit description in *Section : SRAM/NOR-Flash chip-select timing registers 1..4 (FMC_BTR1..4)*. Added note *2.* in *Figure 56* Updated *Section 16.6.5: NAND Flash prewait functionality*. Updated MEMHOLD bit description in *Section : Common memory space timing register 2..4 (FMC_PMEM)*.

Table 346. Document revision history (continued)

Date	Revision	Changes
03-Jun-2016	4 (continued)	ADC: Replaced ADVREGRN by ADVREGEN in *Section : Software procedure to enable the ADC* and *Section 18.4.9: ADC on-off control (ADEN, ADDIS, ADRDY)*. DAC: Updated *Section 19.2: DAC main features*. Updated *Section 19.3.11: DAC channel buffer calibration*. Updated CAL_FLAG1 and CAL_FLAG2 bits description in *Section 19.6.14: DAC x status register (DACx_SR) (x=1 to 2)*. DFSDM: Replaced DFSDM by DFSDM1 when referring to DFSDM within other sections of the document. Renamed DFSDM signal names in all the document. Updated *Section 24.2: DFSDM main features*. Updated *Section 24.4.2: DFSDM pins and internal signals*. Updated entire *Section 24: Digital filter for sigma delta modulators (DFSDM)* to better differentiate the filter indexes (FLTx) from the channel indexes (CHy). LCD: Updated *Section 25.3.5: Voltage generator and contrast control*. Updated *Table 163: Remapping capability*. Updated LCDEN bit description in *Section 25.6.2: LCD frame control register (LCD_FCR)*. TIM1/TIM8: Added note 1 in *Figure 225: Advanced-control timer block diagram* Updated *Section 30.3.4: External trigger input*. Added note *Note: on page 940*. Updated *Section 30.3.24: Timer input XOR function*. Updated *Section 30.3.29: Debug mode*. Updated OC1CE bit description in *Section 30.4.7: TIM1/TIM8 capture/compare mode register 1 (TIMx_CCMR1)*. Updated ETRSEL bit description in *Section 30.4.26: TIM1 option register 2 (TIM1_OR2)*, *Section 30.4.27: TIM1 option register 3 (TIM1_OR3)* and *Section 30.4.28: TIM8 option register 2 (TIM8_OR2)*. TIM2/TIM3/TIM4/TIM5: Updated *Table 195: TIMx internal trigger connection*. Updated PCSC bit description in *Section 31.4.11: TIMx prescaler (TIMx_PSC)*.

Table 346. Document revision history (continued)

Date	Revision	Changes
03-Jun-2016	4 (continued)	Updated ETRSEL bit description in *Section 31.4.21: TIM2 option register 2 (TIM2_OR2)*, *Section 31.4.22: TIM3 option register 2 (TIM3_OR2)*. TIM15/TIM16/TIM17 Added *Section 32.5.21: Timer synchronization (TIM15)*. TIM6/TIM7: Updated PCSC bit description in *Section 33.4.7: TIM6/TIM7 prescaler (TIMx_PSC)*. WWDG: Updated *Section 36.3: IWDG functional description*. Updated T bit description in *Section 37.4.1: Control register (WWDG_CR)*. RTC: Updated *Section 38.3.1: RTC block diagram*. Added *Table 221: RTC functions over modes*. Updated *Section 38.3.9: Resetting the RTC*. Updated *Section 38.3.15: Calibration clock output*. Added Caution at the end of *Section 38.6.3: RTC control register (RTC_CR)*. I2C: Updated *Section 39.4.1: I2C block diagram*. Updated *Section : I2C timings*. Updated *Section 39.4.8: I2C master mode*. Added note in *Section 39.7.5: Timing register (I2C_TIMINGR)* USART: Updated *Section 40.5.5: Tolerance of the USART receiver to clock deviation*. Updated *Section 40.5.10: USART LIN (local interconnection network) mode*. Updated *Section : Using Mute mode with Stop mode*. Updated *Section 40.5.17: Wakeup from Stop mode using USART*. Added bit UCESM in *Section 40.8.3: Control register 3 (USART_CR3)*. LPUART: Added *Table 245: Tolerance of the USART receiver when BRR [3:0] = 0000*. Added *Section 41.4.5: Tolerance of the LPUART receiver to clock deviation*. Updated *Section : Determining the maximum USART baud rate allowing to wakeup correctly from Stop mode when the USART clock source is the HSI clock*. Updated *Section 41.4.11: Wakeup from Stop mode using LPUART*. Added bit UCESM in *Section 41.7.3: Control register 3 (LPUART_CR3)*.

Table 346. Document revision history (continued)

Date	Revision	Changes
03-Jun-2016	4 (continued)	SAI: Replaced FLTH by FLVL in entire *Section 43: Serial audio interface (SAI)*. SWPMI: Updated *Section 44.3.2: SWP initialization and activation*. USB: Updated *Section 47.1: Introduction*. Added *Table 311: OTG_FS speeds supported*. Updated *Section 47.8.1: Host SOFs*. Updated *Section 47.8.2: Peripheral SOFs*. Updated *Section 47.9: Power options*. Updated *Section 47.11.3: FIFO RAM allocation*. Updated *Table 313: Core global control and status registers (CSRs)*. Updated *Table 317: Power and clock gating control and status registers*. Updated *Section 47.15.1: OTG control and status register (OTG_GOTGCTL)*. Updated *Section 47.15.5: OTG reset register (OTG_GRSTCTL)*. Updated *Section 47.15.32: OTG device configuration register (OTG_DCFG)*. Updated *Section 47.16.3: Device initialization*. Updated *Section 47.16.5: Device programming model*.
27-Feb-2017	5	Update of the document to include support for STM32L4x5xx, STM32L496xx and STM32L4A6xx. SYSTEM AND MEMORY OVERVIEW: Updated *Section 2.1: System architecture*, *Section 2.1.3: S2: S-bus*, *Section 2.1.4: S3, S4: DMA-bus, Section 2.1.6: BusMatrix*, *Section 2.4: Embedded SRAM*, *Table 3: SRAM2 organization*, *Section 2.6.1: Boot configuration for STM32L47x/L48x devices* Added *Figure 2: System architecture for STM32L49x/L4Ax*, *Section 2.1.5: S5: DMA2D-bus*, *Figure 4: Memory map for STM32L49x/L4Ax devices*, *Table 2: STM32L49x/L4Ax devices memory map and peripheral register boundary addresses*, *Section 2.6.2: Boot configuration for STM32L49x/L4Ax devices* FLASH: Updated *Table 11: Number of wait states according to CPU clock (HCLK) frequency*, *Section : Fast programming*, *Section 3.4.1: Option bytes description*, *Section 3.7.8: Flash option register (FLASH_OPTR)*

Table 346. Document revision history (continued)

Date	Revision	Changes
27-Feb-2017	5 (continued)	FIREWALL: Updated *Table 19: Segment granularity and area ranges*, *Section 4.4.5: Volatile data segment start address (FW_VDSSA)* PWR: Updated*Section 5: Power control (PWR)*, *Figure 9: Power supply overview*, *Section 5.1.8: Dynamic voltage scaling management*, *Table 23: Functionalities depending on the working mode* Added *Section 5.1.7: VDD12 domain*, *Section 5.4.24: Power Port I pull-up control register (PWR_PUCRI)*, *Section 5.4.25: Power Port I pull-down control register (PWR_PDCRI)* RCC: Updated *Section 6.2: Clocks*, *Table 33: Clock source frequency*, *Section 6.4.2: Internal clock sources calibration register (RCC_ICSCR)*, *Section 6.4.3: Clock configuration register (RCC_CFGR)*, *Section 6.4.6: PLLSAI2 configuration register (RCC_PLLSAI2CFGR)*, *Section 6.4.7: Clock interrupt enable register (RCC_CIER)*, *Section 6.4.8: Clock interrupt flag register (RCC_CIFR)*, *Section 6.4.9: Clock interrupt clear register (RCC_CICR)*, *Section 6.4.10: AHB1 peripheral reset register (RCC_AHB1RSTR)*, *Section 6.4.11: AHB2 peripheral reset register (RCC_AHB2RSTR)*, *Section 6.4.13: APB1 peripheral reset register 1 (RCC_APB1RSTR1)*, *Section 6.4.14: APB1 peripheral reset register 2 (RCC_APB1RSTR2)*, *Section 6.4.16: AHB1 peripheral clock enable register (RCC_AHB1ENR)*, *Section 6.4.17: AHB2 peripheral clock enable register (RCC_AHB2ENR)*, *Section 6.4.19: APB1 peripheral clock enable register 1 (RCC_APB1ENR1)*, *Section 6.4.20: APB1 peripheral clock enable register 2 (RCC_APB1ENR2)*, *Section 6.4.23: AHB2 peripheral clocks enable in Sleep and Stop modes register (RCC_AHB2SMENR)*, *Section 6.4.25: APB1 peripheral clocks enable in Sleep and Stop modes register 1 (RCC_APB1SMENR1)*, *Section 6.4.26: APB1 peripheral clocks enable in Sleep and Stop modes register 2 (RCC_APB1SMENR2)*, *Section 6.4.28: Peripherals independent clock configuration register (RCC_CCIPR)*, *Table 34: RCC register map and reset values* Added *Figure 16: Clock tree (for STM32L49x/L4Ax devices)*, *Section 6.2.4: HSI48 clock (only valid for STM32L49x/L4Ax devices)*, *Section 6.2.11: Clock security system on LSE*, *Section 6.4.31: Clock recovery RC register (RCC_CRRCR)*, *Section 6.4.32: Peripherals independent clock configuration register (RCC_CCIPR2)* CRS: added *Section 7: Clock recovery system (CRS)*

Table 346. Document revision history (continued)

Date	Revision	Changes
27-Feb-2017	5 (continued)	GPIO: Updated *Section 8.4.1: General-purpose I/O (GPIO)* Added *Section 8.4.15: Using PH3 as GPIO (only for STM32L49x/L4Ax devices)* SYSCFG Updated *Section 9.2.1: SYSCFG memory remap register (SYSCFG_MEMRMP)*, *Section 9.2.2: SYSCFG configuration register 1 (SYSCFG_CFGR1)*, *Section 9.2.3: SYSCFG external interrupt configuration register 1 (SYSCFG_EXTICR1)*, *Section 9.2.4: SYSCFG external interrupt configuration register 2 (SYSCFG_EXTICR2)*, *Section 9.2.5: SYSCFG external interrupt configuration register 3 (SYSCFG_EXTICR3)*, *Section 9.2.6: SYSCFG external interrupt configuration register 4 (SYSCFG_EXTICR4)* Added *Section 9.2.11: SYSCFG SRAM2 write protection register 2 (SYSCFG_SWPR2)* PERIPHERAL INTERCONNECT MATRIX: Update *Table 42: STM32L47x/L48x/L49x/L4Ax peripherals interconnect matrix* Added *Section 10.3.16: From ADC (ADC1/ADC2/ADC3) to DFSDM (only for STM32L49x/L4Ax devices)* DMA: Updated *Figure 31: DMA block diagram*, *Figure 29: DMA1 request mapping*, *Figure 30: DMA2 request mapping, Section 11.3.2: DMA request mapping* DMA2D: Updated *Section 12: Chrom-ART Accelerator controller (DMA2D)* NVIC: Updated *Section 13.1: NVIC main features*, *Section 13.2: SysTick calibration value register*, *Table 58: STM32L47x/L48x/L49x/L4Ax vector table* EXTI: Updated *Table 14.1: Introduction*, *Table 14.2: EXTI main features*, *Table 14.4: EXTI interrupt/event line mapping*, *Figure 34: External interrupt/event GPIO mapping*, *Table 59: EXTI lines connections*, *Section 14.5.7: Interrupt mask register 2 (EXTI_IMR2)*. *Section 14.5.8: Event mask register 2 (EXTI_EMR2)*, *TTable 60: Extended interrupt/event controller register map and reset values* CRC: Updated *Section 15.2: CRC main features* FMC: updated *Section 16.2: FMC main features*, *Section 16.3: FMC block diagram*, *Table 73: FMC_BCRx bitfields (mode 1)*, *Table 75: FMC_BCRx bitfields (mode A)*, *Figure 42: Mode 2 and mode B read access waveforms*, *Figure 43: Mode 2 write access waveforms*, *Table 78: FMC_BCRx bitfields (mode 2/B)*, *Table 81: FMC_BCRx bitfields (mode C)*

Table 346. Document revision history (continued)

Date	Revision	Changes
27-Feb-2017	5 (continued)	*Table 84: FMC_BCRx bitfields (mode D)*, *Table 87: FMC_BCRx bitfields (Muxed mode)*, *Table 89: FMC_BCRx bitfields (Synchronous multiplexed read mode)*, *Table 91: FMC_BCRx bitfields (Synchronous multiplexed write mode)*, *Section 16.6.6: NOR/PSRAM controller registers* QUADSPI: Updated *Section 17.1: Introduction*, *Section 17.2: QUADSPI main features*, *Section 17.4.4: QUADSPI signal interface protocol modes*, *Section 17.4.7: QUADSPI memory-mapped mode*, *Section 17.6.1: QUADSPI control register (QUADSPI_CR)*, *Table 102: QUADSPI register map and reset values* Added *Section 17.3: QUADSPI implementation*, *Figure 59: QUADSPI block diagram when dual-flash mode is enabled*, *Section 17.4.2: QUADSPI pins*, *Section 17.4.5: QUADSPI indirect mode* ADC: Updated *Section 18.2: ADC main features*, *Figure 66: ADC block diagram*, *Table 105: ADC input/output pins*, *Section 18.4.3: ADC clocks*, *Section 18.4.12: Channel-wise programmable sampling time (SMPR1, SMPR2)*, *Table 108: ADC1, ADC2 and ADC3 - External triggers for regular channels*, *Table 109: ADC1, ADC2 and ADC3 - External trigger for injected channels*, *Figure 80: Example of JSQR queue of context (sequence change)*, *Figure 81: Example of JSQR queue of context (trigger change)*, *Figure 84: Example of JSQR queue of context with empty queue (case JQM=0)*, *Figure 86: Flushing JSQR queue of context by setting JADSTP=1 (JQM=0). Case when JADSTP occurs during an ongoing conversion.*, *Section 18.4.26: Data management*, *Section 18.6.4: ADC configuration register (ADC_CFGR)*, *Section 18.6.6: ADC sample time register 1 (ADC_SMPR1)*, *Section 18.7.2: ADC common control register (ADC_CCR)* Added *Section 18.3: ADC implementation*, *Section 18.4.27: Managing conversions using the DFSDM*, *Section : DFSDM mode in dual ADC interleaved mode*, *Section : DFSDM mode in dual ADC simultaneous mode* DAC: Updated *Section 19.1: Introduction*, *Section 19.4.1: DAC block diagram*, *Section 19.7.11: Dual DAC 8-bit right aligned data holding register (DAC_DHR8RD)* Added *Table 124: DAC trigger selection* DCMI: Added *Section 20: Digital camera interface (DCMI)* DFSDM: Updated *Section 24.1: Introduction*, *Table 156: DFSDM internal signals*, *Table 157: DFSDM triggers connection*

Table 346. Document revision history (continued)

Date	Revision	Changes
27-Feb-2017	5 (continued)	*Section 24.4.6: Parallel data inputs*, *Section 24.4.13: Data unit block* Added *Section 24.3: DFSDM implementation*, *Table 158: DFSDM break connection*, *Figure 164: Input channel pins redirection* RNG: Updated *Section 27.3.5: RNG operation*, *Section 27.3.7: Error management*, *Section 27.7.1: RNG control register (RNG_CR)*, *Section 27.7.2: RNG status register (RNG_SR)* Added *Section 27.3.1: RNG block diagram*, *Section 27.3.2: RNG internal signals*, *Section 27.3.3: Random number generation*, *Section 27.3.4: RNG initialization*, *Section 27.3.6: RNG clocking*, *Section 27.3.8: RNG low-power usage*, *Section 27.4: RNG interrupts*, *Section 27.5: RNG processing time*, *Section 27.6: RNG entropy source validation* AES: Updated *Figure 201: 128-bit block construction according to the data type (continued)*, *Figure 205: Mode 4: key derivation and decryption with 128-bit key length*, *Figure 206: DMA requests and data transfers during Input phase (AES_IN)*, *Figure 218: DMA transfer of a 128-bit data block during output phase* HASH: added *Section 29: Hash processor (HASH)* TIM15/TIM16/TIM17: Updated *Section 32.5.22: Debug mode*, *Table 206: Output control bits for complementary OCx and OCxN channels with break feature (TIM15)*, *Section 32.7.3: TIMx DMA/interrupt enable register (TIMx_DIER)(x = 16 to 17)*, *Table 208: Output control bits for complementary OCx and OCxN channels with break feature (TIM16/17)*, *Table 209: TIM16/TIM17 register map and reset values* RTC: Updated *Figure 387: RTC block diagram* I2C: Updated *Table 227: STM32L49x/L4Ax devices I2C implementation*, *Section : Master communication initialization (address phase)*, *Table 243: Effect of low-power modes on the I2C*, *Section 39.7.2: I2C control register 2 (I2C_CR2)*,*Section 39.7.3: I2C own address 1 register (I2C_OAR1)*, *Section 39.7.4: I2C own address 2 register (I2C_OAR2)* Added *Table 228: STM32L47x/L48x devices I2C implementation* USART: Updated *Section 40.4: USART implementation*, *Section 40.5.13: USART Smartcard mode*, *Table 253: USART interrupt requests*, *Section 40.8.3: USART control register 3 (USART_CR3)*

Table 346. Document revision history (continued)

Date	Revision	Changes
27-Feb-2017	5 (continued)	*Section 40.8.8: USART interrupt and status register (USART_ISR)*, *Table 254: USART register map and reset values* LPUART: Updated *Section 41.4.11: Wakeup from Stop mode using LPUART* SPI: Updated *Section 42.4.7: Configuration of SPI*, *Section 42.4.14: CRC calculation*, *Section 42.6.6: SPI Rx CRC register (SPIx_RXCRCR)*, *Section 42.6.7: SPI Tx CRC register (SPIx_TXCRCR)* SAI: Updated *Figure 471: SAI functional block diagram*, *Section 43.3.8: SAI clock generator*, *Table 269: Example of possible audio frequency sampling range* Added *Section 43.3.2: SAI pins and internal signals* BxCAN: Updated *Section 46.9.4: CAN filter registers*, *TTable 315: bxCAN register map and reset values* Added *Section : Dual CAN peripheral configuration*, *Figure 514: Dual-CAN block diagram* OTG_FS: Updated *Section 47.5.1: ID line detection*, *Figure 532: USB_FS peripheral-only connection*, *Section 47.15.5: OTG reset register (OTG_GRSTCTL)*, *Section 47.15.16: OTG core ID register (OTG_CID)*, *Section 47.15.35: OTG device configuration register (OTG_DCFG)*, *Section 47.15.56: OTG power and clock gating control register (OTG_PCGCCTL)*, *Table 328: OTG_FS register map and reset values* DEBUG SUPPORT: Updated *Section 48.4.2: Flexible SWJ-DP pin assignment*, *Section 48.6.1: MCU device ID code*, *Section 48.16.4: Debug MCU APB1 freeze register1(DBGMCU_APB1FZR1)*, *Section 48.16.5: Debug MCU APB1 freeze register 2 (DBGMCU_APB1FZR2)*, *Table 342: Synchronous TRACE pin assignment*, *Table 343: Flexible TRACE pin assignment*, *Table 345: DBG register map and reset values* DEVICE ELECTRONIC SIGNATURE: Updated *Section 49.3: Package data register*

Table 346. Document revision history (continued)

Date	Revision	Changes
22-Mar-2018	6	Added note on cover page System and memory overview: *Figure 3: Memory map for STM32L47x/L48x devices*, *Figure 4: Memory map for STM32L49x/L4Ax devices*, *Table 2: STM32L49x/L4Ax devices memory map and peripheral register boundary addresses* Updated: note on *Section 2.6.1: Boot configuration for STM32L47x/L48x devices*, *Section : User and read protection option bytes*, *Section : Bank 1 PCROP End address option bytes*, *Section : Bank 2 WRP Area A address option bytes*, *Section : Bank 1 WRP Area B address option bytes*, *Section : Bank 2 PCROP Start address option bytes*, *Section : Bank 2 PCROP End address option bytes*, *Section : Bank 2 WRP Area A address option bytes*, *Section : Bank 2 WRP Area B address option bytes,Section 3.7.8: Flash option register (FLASH_OPTR)*, *Section 3.7.9: Flash Bank 1 PCROP Start address register (FLASH_PCROP1SR)*, *Section 3.7.10: Flash Bank 1 PCROP End address register (FLASH_PCROP1ER)*, *Section 3.7.11: Flash Bank 1 WRP area A address register (FLASH_WRP1AR)*, *Section 3.7.12: Flash Bank 1 WRP area B address register (FLASH_WRP1BR)*, *Section 3.7.13: Flash Bank 2 PCROP Start address register (FLASH_PCROP2SR)*, *Section 3.7.14: Flash Bank 2 PCROP End address register (FLASH_PCROP2ER)*, *Section 3.7.15: Flash Bank 2 WRP area A address register (FLASH_WRP2AR)*, *Section 3.7.16: Flash Bank 2 WRP area B address register (FLASH_WRP2BR)* Added: notes in *Table 6: Boot modes* FIREWALL: Updated *Section 4.3.2: Functional requirements*, *Table 18: Segment accesses according to the Firewall state* PWR: Updated *Section 5.1.7: VDD12 domain*, *Section 5.1.8: Dynamic voltage scaling management*, *Figure 10: Internal main regulator overview*, *Section 5.2.2: Programmable voltage detector (PVD)* RCC: Updated *Figure 15: Clock tree (for STM32L47x/L48x devices)*, *Figure 16: Clock tree (for STM32L49x/L4Ax devices)*, *Table 33: Clock source frequency*, *Section 6.2.17: Clock-out capability*, *Section 6.4.1: Clock control register (RCC_CR)*, *Section 6.4.2: Internal clock sources calibration register (RCC_ICSCR)*, *Section 6.4.5: PLLSAI1 configuration register (RCC_PLLSAI1CFGR)*, *Section 6.4.6: PLLSAI2 configuration register (RCC_PLLSAI2CFGR)*

Table 346. Document revision history (continued)

Date	Revision	Changes
22-Mar-2018	6 (continued)	GPIO: Updated *Section 8.4.2: I/O pin alternate function multiplexer and mapping* SYSCFG: Updated *Section 9.2.1: SYSCFG memory remap register (SYSCFG_MEMRMP)* DMA and DMA2D: Updated *Table 44: DMA1 requests for each channel*, *Table 45: DMA2 requests for each channel*, *Table 57: DMA2D register map and reset values* Removed Section 12.5.21: IP version register (DMA2D_VERR), Section 12.5.22: DMA2D IP identification register (DMA2D_IPIDR), Section 12.2.23: DMA2D IP size identification register (DMA2D_SIDR) NVIC: Updated *Section 13.2: SysTick calibration value register*, *Table 58: STM32L47x/L48x/L49x/L4Ax vector table, Figure 34: External interrupt/event GPIO mapping* CRC: Updated section *Section 15.4.2: CRC independent data register (CRC_IDR)*, *Section 15.4.3: CRC control register (CRC_CR)*, *Section 15.4.4: CRC initial value (CRC_INIT)* QUADSPI: Updated *Section 17.6.1: QUADSPI control register (QUADSPI_CR), Section 17.6.2: QUADSPI device configuration register (QUADSPI_DCR), Section 17.6.4: QUADSPI flag clear register (QUADSPI_FCR)* ADC: Updated *Section 18.1: Introduction*, *Section 18.2: ADC main features*, *Figure 66: ADC block diagram*, *Table 104: ADC internal input/output signals*, *Table 105: ADC input/output pins*, *Figure 68: ADC1 connectivity*, *Figure 69: ADC2 connectivity*, *Figure 70: ADC3 connectivity*, *Section 18.4.7: Single-ended and differential input channels*, *Section 18.4.11: Channel selection (SQRx, JSQRx)*, *Section 18.4.18: Conversion on external trigger and trigger polarity (EXTSEL, EXTEN,JEXTSEL, JEXTEN)*, *Figure 118: Dual ADC block diagram*[(1)], *Section : Interleaved mode with independent injected*, *Figure 121: Interleaved mode on 1 channel in continuous conversion mode: dual ADC mode*, *Figure 122: Interleaved mode on 1 channel in single conversion mode: dual ADC mode*, *Section 18.4.32: Temperature sensor*, *Figure 136: VREFINT channel block diagram*,

Table 346. Document revision history (continued)

Date	Revision	Changes
22-Mar-2018	6 (continued)	*Section 18.6.1: ADC interrupt and status register (ADC_ISR)*, *Section 18.6.4: ADC configuration register (ADC_CFGR)*, *Section 18.6.18: ADC injected channel y data register (ADC_JDRy)*, *Section 18.6.21: ADC Differential mode Selection Register (ADC_DIFSEL)*, *Table 118: DELAY bits versus ADC resolution* Added *Figure 44: Bulb mode timing diagram* DAC: Updated *Section 19.2: DAC main features, Section 19.4.7: DMA requests, Section 19.4.10: DAC channel modes, Section 19.4.12: Dual DAC channel conversion modes (if dual channels are available), Section 19.7.18: DAC channel2 sample and hold sample time register (DAC_SHSR2), Section 19.7.20: DAC sample and hold refresh time register (DAC_SHRR)* Added *Section 19.6: DAC interrupts* VREFBUF Updated *Section 21.2: VREFBUF functional description*, *Table 141: VREF buffer modes*, *Section 21.4.1: VREFBUF control and status register (VREFBUF_CSR)* COMP: Updated *Section 22.3.8: COMP power and speed modes* TSC: Updated *Table 169: Acquisition sequence summary* RNG: Updated *Section 27.3.7: Error management*, *Section 27.6.2: Validation conditions*, *Section 27.7.1: RNG control register (RNG_CR)*, *Table 177: RNG register map and reset map* AES: Updated *Section 28.1: Introduction*, *Section 28.2: AES main features*, *Section 28.4: AES functional description*, all subsections of *Section 28.7: AES registers*, *Table :* Added *Section 28.3: AES implementation*, all subsections of *Section 28.4: AES functional description* Removed Section 28.4: Encryption and derivation keys, Section 28.9: Operating modes Replaced Section 28.5:AES chaining algorithms with *Section 28.4.8: AES basic chaining modes (ECB, CBC)*, *Section 28.4.9: AES counter (CTR) mode*. Replaced Section 28.6: Galois counter mode (GCM) with *Section 28.4.10: AES Galois/counter mode (GCM)* Replaced Section 28.7:AES cipher message authentication code mode (CMAC) with *Section 28.4.11: AES Galois message authentication code (GMAC)*

Table 346. Document revision history (continued)

Date	Revision	Changes
22-Mar-2018	6 (continued)	Replaced Section 28.8: Data type with *Section 28.4.13: .AES data registers and data swapping* Replaced Section 28.10: AES DMA interface with *Section 28.4.16: AES DMA interface* Replaced Section 28.13: AES interrupts with *Section 28.5: AES interrupts* Advanced-control Timers(TIM1/TIM8): Updated *Figure 237: Counter timing diagram, internal clock divided by 1, TIMx_ARR = 0x6, Section 30.3.22: Encoder interface mode, Section : Slave mode: external clock mode 2 + trigger mode, Section 30.3.27: ADC synchronization, Section 30.4.3: TIMx slave mode control register (TIMx_SMCR)(x = 1, 8), Section 30.4.14: TIMx auto-reload register (TIMx_ARR)(x = 1, 8), Section 30.4.14: TIMx auto-reload register (TIMx_ARR)(x = 1, 8)* General-purpose timers: Updated *Figure 298: Counter timing diagram, internal clock divided by 1, TIMx_ARR=0x6*, *Figure 32.2: TIM15 main features*, *Figure 32.5.21: Timer synchronization (TIM15)*, *Section 32.6.3: TIM15 slave mode control register (TIM15_SMCR)*, *Section 32.6.8: TIM15 capture/compare mode register 1 [alternate] (TIM15_CCMR1)*, *Section 32.7.17: TIM16 option register 1 (TIM16_OR1)* Added *Figure 32.4: Implementation*, *Section 32.5.15: Retriggerable one pulse mode (OPM) (TIM15 only)* LPTIMER: Added *Section 34.4.2: LPTIM trigger mapping* Updated *Figure 378: LPTIM output waveform, single counting mode configuration*, *Figure 379: LPTIM output waveform, Single counting mode configuration and Set-once mode activated (WAVE bit is set)*, *Figure 380: LPTIM output waveform, Continuous counting mode configuration*, *Figure 381: Waveform generation*, *Section 34.4.10: Register update*, *Section 34.4.13: Encoder mode*, *Section 34.6: LPTIM interrupts*, *Section 34.7.4: LPTIM configuration register (LPTIM_CFGR)* WWDG: Updated *Figure 385: Watchdog block diagram*, *Figure 386: Window watchdog timing diagram* RTC: Updated *Figure 387: RTC block diagram*, *Section 38.3.1: RTC block diagram*, *Section 38.3.11: RTC reference clock detection*, *Section 38.3.14: Tamper detection*, *Section 38.3.16: Alarm output*. I2C: Updated *Section 39.4.10: I2C_TIMINGR register configuration examples*, *Section 39.7.8: I2C interrupt clear register (I2C_ICR)*

Table 346. Document revision history (continued)

Date	Revision	Changes
22-Mar-2018	6 (continued)	USART: Updated *Figure 430: USART data clock timing diagram (M bits = 00)* Added note 2 on *Table 246: STM32L47x/L48x/L49x/L4Ax USART/UART/LPUART features*, *Section 40.5.5: Tolerance of the USART receiver to clock deviation*, *Section 40.5.11: USART synchronous mode*, *Section 40.8.1: USART control register 1 (USART_CR1)* LPUART: Updated *Section 41.4.5: Tolerance of the LPUART receiver to clock deviation, Section 41.7.1: Control register 1 (LPUART_CR1), Section 41.7.3: Control register 3 (LPUART_CR3)* SAI: Updated *Section 43.5.1: SAI global configuration register (SAI_GCR)*, *Section 43.5.2: SAI configuration register 1 (SAI_ACR1)*, *Table 274: SAI register map and reset values* bxCAN: Updated *Section 46.2: bxCAN main features*, *Section 46.3.4: Acceptance filters*, *Section 46.6: Behavior in debug mode*, *Section 46.7.4: Identifier filtering*, *Figure 523: Example of filter numbering* Added: *Figure 522: Filter bank scale configuration - register organization*, *Figure 523: Example of filter numbering*, *Figure 524: Filtering mechanism - example*, *Figure 526: Bit timing*, *Figure 529: CAN mailbox registers*, *Section 46.9.4: CAN filter registers* OTG_FS: Updated *Section 47.7.2: USB host states, Section 47.9: OTG_FS low-power modes, Figure 538: Interrupt hierarchy, Section 47.15.38: OTG device IN endpoint common interrupt mask register (OTG_DIEPMSK), Section 47.15.39: OTG device OUT endpoint common interrupt mask register (OTG_DOEPMSK), Section 47.15.43: OTG device V_{BUS} pulsing time register (OTG_DVBUSPULSE), Section 47.15.47: OTG device IN endpoint x interrupt register (OTG_DIEPINTx), Section 47.15.52: OTG device OUT endpoint x interrupt register (OTG_DOEPINTx), Section 47.16.4: Host programming model, Table 328: OTG_FS register map and reset values* DBG_SUPPORT: Updated *Section 48.6.1: MCU device ID code*

Table 346. Document revision history (continued)

Date	Revision	Changes
08-Apr-2020	7	Added support for STM32L471xx products in the present reference manual (following RM0392 discontinuation). The changes that only consist in mentioning that STM32L471xx benefit or does not benefit from a feature that was already documented in the previous release of this RM are not listed here below. FLASH: Updated *Section 3.3.6: Flash main memory erase sequences*. Updated *Section 3.3.7: Flash main memory programming sequences*. Updated *Section Table 12.: Option byte format*. Updated *Section Table 14.: Flash memory read protection status*. RCC: Updated *Section 6.2: Clocks* introduction. Updated *Figure 15: Clock tree (for STM32L47x/L48x devices)*. Updated *Section 6.2.5: PLL* introduction. Updated *Section 6.4.5: PLLSAI1 configuration register (RCC_PLLSAI1CFGR)*. Updated *Section 6.4.6: PLLSAI2 configuration register (RCC_PLLSAI2CFGR)*. Updated *Section 6.4.8: Clock interrupt flag register (RCC_CIFR)*. CRS: Updated *Section 7.1: Introduction*. Added *Section 7.3: CRS implementation*. GPIO: Added *Section 8.3: GPIO implementation*. Updated *Section 8.4: GPIO functional description* introduction. Updated *Section 8.4.2: I/O pin alternate function multiplexer and mapping*. Updated *Section 8.5.1: GPIO port mode register (GPIOx_MODER) (x =A to I)*. Updated *Section 8.5.6: GPIO port output data register (GPIOx_ODR) (x = A to I)*. SYSCFG: Updated *Section 9.2.3: SYSCFG external interrupt configuration register 1 (SYSCFG_EXTICR1)*. Updated *Section 9.2.4: SYSCFG external interrupt configuration register 2 (SYSCFG_EXTICR2)*. Updated *Section 9.2.5: SYSCFG external interrupt configuration register 3 (SYSCFG_EXTICR3)*. Updated *Section 9.2.6: SYSCFG external interrupt configuration register 4 (SYSCFG_EXTICR4)*.

Table 346. Document revision history (continued)

Date	Revision	Changes
08-Apr-2020	7 (continued)	Updated *Section 9.2.11: SYSCFG SRAM2 write protection register 2 (SYSCFG_SWPR2)*. INTERCONNECT: Updated *Section 10.3.2: From timer (TIM1/TIM2/TIM3/TIM4/TIM6/TIM8/TIM15) and EXTI to ADC (ADC1/ADC2/ADC3)*. DMA: Updated *Section 11.1: Introduction*. Added *Section : Channel state and disabling a channel*. Updated *Section Table 46.: Programmable data width and endian behavior (when PINC = MINC = 1)*. DMA2D: Updated *Section 12.5.15: DMA2D output color register (DMA2D_OCOLR)*. Added *Section 12.5.21: DMA2D foreground CLUT (DMA2D_FGCLUT[y])*. Added *Section 12.5.22: DMA2D background CLUT (DMA2D_BGCLUT[y])*. FMC: Updated all table titles from *Table 73: FMC_BCRx bitfields (mode 1)* to *Section Table 92.: FMC_BTRx bitfields (Synchronous multiplexed write mode)*. Updated *Section : SRAM/NOR-Flash chip-select timing register for bank x (FMC_BTRx)*. QUADSPI: Updated *Section 17.6.1: QUADSPI control register (QUADSPI_CR)*. Updated *Section 17.6.6: QUADSPI communication configuration register (QUADSPI_CCR)*. ADC: Updated *Section 18.2: ADC main features*. Updated *Figure 66: ADC block diagram*. Updated *Table 104: ADC internal input/output signals*. Updated *Figure 68: ADC1 connectivity*. Updated *Figure 70: ADC3 connectivity*. Updated *Section 18.4.7: Single-ended and differential input channels*. Updated *Section 18.4.9: ADC on-off control (ADEN, ADDIS, ADRDY)*. Updated *Section 18.4.11: Channel selection (SQRx, JSQRx)*. Updated *Section 18.4.12: Channel-wise programmable sampling time (SMPR1, SMPR2)*. Updated *Section 18.4.16: ADC timing*. Updated *Section 18.4.20: Discontinuous mode (DISCEN, DISCNUM, JDISCEN)*. Updated *Table 110: TSAR timings depending on resolution*. Updated *Section 18.4.26: Data management*.

Table 346. Document revision history (continued)

Date	Revision	Changes
08-Apr-2020	7 (continued)	Updated *Table 113: Analog watchdog 1 comparison*. Updated *Table 114: Analog watchdog 2 and 3 comparison*. Updated *Figure 121: Interleaved mode on 1 channel in continuous conversion mode: dual ADC mode*. Updated *Section 18.4.32: Temperature sensor*. Updated *Section 18.4.34: Monitoring the internal voltage reference*. Updated *Section 18.6.4: ADC configuration register (ADC_CFGR)*. Updated *Section 18.6.7: ADC sample time register 2 (ADC_SMPR2)*. Updated *Section 18.6.12: ADC regular sequence register 2 (ADC_SQR2)*. Updated *Section 18.6.13: ADC regular sequence register 3 (ADC_SQR3)*. Updated *Section 18.6.16: ADC injected sequence register (ADC_JSQR)*. Updated *Section 18.6.17: ADC offset y register (ADC_OFRy)*. Updated *Section 18.6.19: ADC Analog Watchdog 2 Configuration Register (ADC_AWD2CR)*. Updated *Section 18.6.20: ADC Analog Watchdog 3 Configuration Register (ADC_AWD3CR)*. Updated *Section 18.6.21: ADC Differential mode Selection Register (ADC_DIFSEL)*. DAC: Updated *Section 19.3: DAC implementation*. Updated *Section 19.4.6: DAC trigger selection*. Updated *Section 19.4.10: DAC channel modes*. DCMI: Updated *Section 20.1: Introduction*. Updated *Section 20.3.11: DCMI data format description*. Updated *Table 139: DCMI interrupts*. VREF: Added *Section 21.3: VREFBUF trimming*. Updated *Section 21.4.2: VREFBUF calibration control register (VREFBUF_CCR)*. DFSDM: Updated *Table 154: DFSDM1 implementation*. Updated *Table 24.4.3: DFSDM reset and clocks*. Updated *Section 24.7: DFSDM channel y registers (y=0..7)* introduction. Updated *Section 24.8: DFSDM filter x module registers (x=0..3)* introduction. RNG: Updated *Section 27.1: Introduction*. Updated *Section 27.2: RNG main features*.

Table 346. Document revision history (continued)

Date	Revision	Changes
08-Apr-2020	7 (continued)	Updated *Section 27.3.3: Random number generation*. Updated *Section 27.3.5: RNG operation*. Updated *Section 27.3.6: RNG clocking*. Updated *Section Table 176.: RNG interrupt requests*. Updated *Section 27.6: RNG entropy source validation*. Updated *Section 27.7.3: RNG data register (RNG_DR)*. AES: Updated *Section : Suspend/resume operations in GCM mode*. HASH: *Section 29: Hash processor (HASH)* has been completely revisited. TIM1/TIM8: Updated *Section 30.3.3: Repetition counter*. Updated *Section : External clock source mode 2*. Updated *Section 30.3.16: Using the break function*. Updated *Section 30.4: TIM1/TIM8 registers* introduction. Updated *Section 30.4.2: TIMx control register 2 (TIMx_CR2)(x = 1, 8)*. Updated *Section 30.4.5: TIMx status register (TIMx_SR)(x = 1, 8)*. Updated *Section 30.4.7: TIMx capture/compare mode register 1 [alternate] (TIMx_CCMR1)(x = 1, 8)*. Added *Section 30.4.8: TIMx capture/compare mode register 1 [alternate] (TIMx_CCMR1)(x = 1, 8)*. Updated *Section 30.4.9: TIMx capture/compare mode register 2 [alternate] (TIMx_CCMR2)(x = 1, 8)*. Added *Section 30.4.10: TIMx capture/compare mode register 2 [alternate] (TIMx_CCMR2)(x = 1, 8)*. Updated *Section 30.4.11: TIMx capture/compare enable register (TIMx_CCER)(x = 1, 8)*. Updated *Section 30.4.25: TIMx capture/compare mode register 3 (TIMx_CCMR3)(x = 1, 8)*. TIM2/TIM3/TIM4/TIM5: Updated *Section : External clock source mode 2*. Updated *Figure 311: Output stage of Capture/Compare channel (channel 1)*. Updated *Section 31.4.5: TIMx status register (TIMx_SR)(x = 2 to 5)*. Updated *Section 31.4.5: TIMx status register (TIMx_SR)(x = 2 to 5)*. Updated *Section 31.4.7: TIMx capture/compare mode register 1 [alternate] (TIMx_CCMR1) (x = 2 to 5)*. Updated *Section 31.4.8: TIMx capture/compare mode register 1 [alternate] (TIMx_CCMR1) (x = 2 to 5)*. Updated *Section 31.4.9: TIMx capture/compare mode register 2 [alternate] (TIMx_CCMR2) (x = 2 to 5)*. Updated *Section 31.4.10: TIMx capture/compare mode register 2 [alternate] (TIMx_CCMR2) (x = 2 to 5)*.

Table 346. Document revision history (continued)

Date	Revision	Changes
08-Apr-2020	7 (continued)	Updated *Section 31.4.11: TIMx capture/compare enable register (TIMx_CCER)(x = 2 to 5)*. Updated *Section 31.4.12: TIMx counter [alternate] (TIMx_CNT)(x = 2 to 5)*. Updated *Section 31.4.13: TIMx counter [alternate] (TIMx_CNT)(x = 2 to 5)*. Updated *Section 31.4.25: TIM3 option register 2 (TIM3_OR2)*. TIM15/TIM16/TIM17: Updated *Figure 348: Capture/compare channel 1 main circuit*. Updated *Section 32.5.13: Using the break function*. Updated *Section 32.6: TIM15 registers* introduction. Updated *Section 32.6.5: TIM15 status register (TIM15_SR)*. Updated *Section 32.6.7: TIM15 capture/compare mode register 1 [alternate] (TIM15_CCMR1)*. Updated *Section 32.6.8: TIM15 capture/compare mode register 1 [alternate] (TIM15_CCMR1)*. Updated *Section 32.6.9: TIM15 capture/compare enable register (TIM15_CCER)*. Updated *Section 32.7: TIM16/TIM17 registers* introduction. Updated *Section 32.7.2: TIMx control register 2 (TIMx_CR2)(x = 16 to 17)*. Updated *Section 32.7.3: TIMx DMA/interrupt enable register (TIMx_DIER)(x = 16 to 17)*. Updated *Section 32.7.4: TIMx status register (TIMx_SR)(x = 16 to 17)*. Updated *Section 32.7.6: TIMx capture/compare mode register 1 [alternate] (TIMx_CCMR1) (x = 16 to 17)*. Updated *Section 32.7.7: TIMx capture/compare mode register 1 [alternate] (TIMx_CCMR1) (x = 16 to 17)*. Updated *Section 32.7.8: TIMx capture/compare enable register (TIMx_CCER)(x = 16 to 17)*. LPTIM: Updated *Section 34.4.6: Trigger multiplexer*. Updated *Section 34.4.9: Waveform generation*. Updated *Section 34.4.13: Encoder mode*. Added *Section 34.4.14: Debug mode*. Updated *Section 34.7: LPTIM registers* introduction. Added *Section 34.7.1: LPTIM interrupt and status register (LPTIM_ISR)*. Added *Section 34.7.2: LPTIM interrupt clear register (LPTIM_ICR)*. Added *Section 34.7.3: LPTIM interrupt enable register (LPTIM_IER)*. Added *Section 34.7.4: LPTIM configuration register (LPTIM_CFGR)*.

Table 346. Document revision history (continued)

Date	Revision	Changes
08-Apr-2020	7 (continued)	IWDG: Updated *Figure 384: Independent watchdog block diagram* footnote. Added *Section 34.7.2: LPTIM interrupt clear register (LPTIM_ICR)*. WWDG: Removed Section 37.3.3: Advanced watchdog interrupt feature. Added *Section 37.4: WWDG interrupts*. RTC: Updated *Section 38.3.4: Real-time clock and calendar*. Updated *Section 38.3.8: Reading the calendar*. Updated *Section Table 224.: Effect of low-power modes on RTC*. I2C: Updated *Section 39.3: I2C implementation*. Updated *Section 39.4.1: I2C block diagram*. Added *Section 39.4.2: I2C pins and internal signals*. Updated *Table 243: Effect of low-power modes on the I2C*. Updated *Table 244: I2C Interrupt requests*. Updated *Section 39.7.2: I2C control register 2 (I2C_CR2)*. Updated *Section 39.7.3: I2C own address 1 register (I2C_OAR1)*. USART/UART: Updated *Figure 418: USART block diagram*. Updated *Figure 438: Reception using DMA*. Updated *Figure 454: LPUART interrupt mapping diagram*. Updated *Figure 40.8: USART registers* introduction. Updated *Figure 443: LPUART block diagram*. Updated *Section 41.4.4: LPUART baud rate generation*. Updated *Figure 41.7: LPUART registers* introduction. SPI: Updated *Section 42.2: SPI main features*. Updated *Section 42.3: SPI implementation*. Updated *Section Table 262.: STM32L47x/L48x/L49x/L4Ax SPI implementation*. SAI: Updated *Section 43.3.8: SAI clock generator*. Updated *Section : Clock generator programming in SPDIF generator mode*. Updated *Section : Companding mode*. Updated *Section 43.5: SAI registers* introduction. Updated *Section 43.5.5: SAI configuration register 2 (SAI_BCR2)*.

Table 346. Document revision history (continued)

Date	Revision	Changes
08-Apr-2020	7 (continued)	Updated *Section 43.5.6: SAI frame configuration register (SAI_AFRCR)*. Updated *Section 43.5.12: SAI status register (SAI_ASR)*. Updated *Section 43.5.13: SAI status register (SAI_BSR)*. SWPMI: Updated *Section 44.6: SWPMI registers* introduction. USB: Updated *Table 321: Core global control and status registers (CSRs)*. Updated *Table 47.15.2: OTG interrupt register (OTG_GOTGINT)*. updated *Section 47.15.6: OTG core interrupt register (OTG_GINTSTS)*. Updated *Section 47.15.8: OTG receive status debug read register (OTG_GRXSTSR)*. Updated *Section 47.15.9: OTG receive status debug read [alternate] (OTG_GRXSTSR)*. Updated *Section 47.15.9: OTG receive status debug read [alternate] (OTG_GRXSTSR)*. Added *Section 47.15.10: OTG status read and pop registers (OTG_GRXSTSP)*. Added *Section 47.15.11: OTG status read and pop registers [alternate] (OTG_GRXSTSP)*. Updated *Section 47.15.17: OTG core LPM configuration register (OTG_GLPMCFG)*. Updated *Section 47.15.21: OTG device IN endpoint transmit FIFO x size register (OTG_DIEPTXFx)*. Updated *Section 47.15.24: OTG host frame interval register (OTG_HFIR)*. Updated *Section 47.15.30: OTG host channel x characteristics register (OTG_HCCHARx)*. Updated *Section 47.15.37: OTG device status register (OTG_DSTS)*. Updated *Section 47.15.38: OTG device IN endpoint common interrupt mask register (OTG_DIEPMSK)*. Updated *Section 47.15.39: OTG device OUT endpoint common interrupt mask register (OTG_DOEPMSK)*. Updated *Section 47.15.46: OTG device IN endpoint x control register (OTG_DIEPCTLx)*. Updated *Section 47.15.47: OTG device IN endpoint x interrupt register (OTG_DIEPINTx)*. Updated *Section 47.15.49: OTG device IN endpoint transmit FIFO status register (OTG_DTXFSTSx)*. Updated *Section 47.15.52: OTG device OUT endpoint x interrupt register (OTG_DOEPINTx)*. Updated *Section 47.16.3: Device initialization*. Updated *Section : Operational model*.

Table 346. Document revision history (continued)

Date	Revision	Changes
08-Apr-2020	7 (continued)	Updated *Section : IN data transfers*. ELECTRONIC SIGNATURE: *Section 49.3: Package data register*.

Index

A

ADC_AWD2CR 609
ADC_AWD3CR 610
ADC_CALFACT 611
ADC_CCR 613
ADC_CDR 616
ADC_CFGR 592
ADC_CFGR2 596
ADC_CR 589
ADC_CSR 611
ADC_DIFSEL 610
ADC_DR 606
ADC_IER 587
ADC_ISR 585
ADC_JDRy 609
ADC_JSQR 606
ADC_OFRy 608
ADC_SMPR1 598
ADC_SMPR2 599
ADC_SQR1 602
ADC_SQR2 603
ADC_SQR3 604
ADC_SQR4 605
ADC_TR1 600
ADC_TR2 601
ADC_TR3 601
AES_CR 873
AES_DINR 877
AES_DOUTR 878
AES_IVR 880
AES_KEYRx 878
AES_SR 876

C

CAN_BTR 1658
CAN_ESR 1657
CAN_FA1R 1668
CAN_FFA1R 1667
CAN_FiRx 1669
CAN_FM1R 1666
CAN_FMR 1666
CAN_FS1R 1667
CAN_IER 1656
CAN_MCR 1649
CAN_MSR 1651
CAN_RDHxR 1665
CAN_RDLxR 1665
CAN_RDTxR 1664
CAN_RF0R 1654
CAN_RF1R 1655
CAN_RIxR 1663
CAN_TDHxR 1662
CAN_TDLxR 1662
CAN_TDTxR 1661
CAN_TIxR 1660
CAN_TSR 1652
COMP1_CSR 691
COMP2_CSR 693
CRC_CR 418
CRC_DR 417
CRC_IDR 417
CRC_INIT 418
CRC_POL 419
CRS_CFGR 289
CRS_CR 288
CRS_ICR 292
CRS_ISR 290

D

DAC_CCR 650
DAC_CR 639
DAC_DHR12L1 643
DAC_DHR12L2 645
DAC_DHR12LD 646
DAC_DHR12R1 643
DAC_DHR12R2 644
DAC_DHR12RD 646
DAC_DHR8R1 644
DAC_DHR8R2 645
DAC_DHR8RD 647
DAC_DOR1 647
DAC_DOR2 648
DAC_MCR 650
DAC_SHHR 653
DAC_SHRR 653
DAC_SHSR1 652
DAC_SHSR2 652
DAC_SR 648
DAC_SWTRGR 642
DBGMCU_APB1FZR1 1855
DBGMCU_APB1FZR2 1857
DBGMCU_APB2FZR 1857
DBGMCU_CR 1854
DBGMCU_IDCODE 1841
DCMI_CR 668

DCMI_CWSIZE 678
DCMI_CWSTRT 678
DCMI_DR 679
DCMI_ESCR 676
DCMI_ESUR 677
DCMI_ICR 675
DCMI_IER 673
DCMI_MIS 674
DCMI_RIS 672
DCMI_SR 671
DFSDM_CHyAWSCDR 743
DFSDM_CHyCFGR1 740
DFSDM_CHyCFGR2 743
DFSDM_CHyDATINR 745
DFSDM_CHyWDATR 744
DFSDM_FLTxAWCFR 758
DFSDM_FLTxAWHTR 756
DFSDM_FLTxAWLTR 757
DFSDM_FLTxAWSR 757
DFSDM_FLTxCNVTIMR 759
DFSDM_FLTxCR1 747
DFSDM_FLTxCR2 749
DFSDM_FLTxEXMAX 758
DFSDM_FLTxEXMIN 759
DFSDM_FLTxFCR 754
DFSDM_FLTxICR 752
DFSDM_FLTxISR 751
DFSDM_FLTxJCHGR 753
DFSDM_FLTxJDATAR 755
DFSDM_FLTxRDATAR 755
DMA_CCRx 354
DMA_CMARx 358
DMA_CNDTRx 357
DMA_CPARx 357
DMA_IFCR 353
DMA_ISR 350
DMA1_CSELR 359
DMA2D_AMTCR 391
DMA2D_BGCLUT 392
DMA2D_BGCMAR 387
DMA2D_BGCOLR 386
DMA2D_BGMAR 379
DMA2D_BGOR 380
DMA2D_BGPFCCR 384
DMA2D_CR 375
DMA2D_FGCLUT 392
DMA2D_FGCMAR 386
DMA2D_FGCOLR 383
DMA2D_FGMAR 378
DMA2D_FGOR 379
DMA2D_FGPFCCR 381
DMA2D_IFCR 378
DMA2D_ISR 377
DMA2D_LWR 391
DMA2D_NLR 390
DMA2D_OCOLR 388
DMA2D_OMAR 390
DMA2D_OOR 390
DMA2D_OPFCCR 387

E

EXTI_EMR1 406
EXTI_EMR2 410
EXTI_FTSR1 407
EXTI_FTSR2 411
EXTI_IMR1 406
EXTI_IMR2 409
EXTI_PR1 409
EXTI_PR2 412
EXTI_RTSR1 406
EXTI_RTSR2 410
EXTI_SWIER1 408
EXTI_SWIER2 411

F

FLASH_ACR 124
FLASH_CR 128
FLASH_ECCR 130
FLASH_KEYR 126
FLASH_OPTKEYR 126
FLASH_OPTR 131
FLASH_PCROP1ER 134
FLASH_PCROP1SR 133
FLASH_PCROP2ER 136
FLASH_PCROP2SR 135
FLASH_PDKEYR 125
FLASH_SR 127
FLASH_WRP1AR 134
FLASH_WRP1BR 135
FLASH_WRP2AR 136
FLASH_WRP2BR 137
FMC_BCRx 455
FMC_BTRx 457
FMC_BWTRx 460
FMC_ECCR 473
FMC_PATT 472
FMC_PCR 468
FMC_PMEM 471
FMC_SR 470
FW_CR 150
FW_CSL 147
FW_CSSA 147
FW_NVDSL 148

FW_NVDSSA 148
FW_VDSL 149
FW_VDSSA 149

G

GPIOx_AFRH 310
GPIOx_AFRL 309
GPIOx_ASCR 312
GPIOx_BRR 311
GPIOx_BSRR 308
GPIOx_IDR 307
GPIOx_LCKR 308
GPIOx_MODER 305
GPIOx_ODR 307
GPIOx_OSPEEDR 306
GPIOx_OTYPER 306
GPIOx_PUPDR 306

H

HASH_CR 899
HASH_CSR0 907
HASH_CSRx 907
HASH_DIN 902
HASH_HR0 904
HASH_HR5 905
HASH_HRx 904
HASH_IMR 905
HASH_SR 906
HASH_STR 903

I

I2C_CR1 1323
I2C_CR2 1326
I2C_ICR 1335
I2C_ISR 1333
I2C_OAR1 1329
I2C_OAR2 1330
I2C_PECR 1336
I2C_RXDR 1337
I2C_TIMEOUTR 1332
I2C_TIMINGR 1331
I2C_TXDR 1337-1338
I2Cx_CR2 . . . . . 147-148, 150, 1326
IWDG_KR 1212
IWDG_PR 1213
IWDG_RLR 1214
IWDG_SR 1215
IWDG_WINR 1216

L

LCD_CLR 798
LCD_CR 793
LCD_RAM 798
LPTIM_ARR 1205
LPTIM_CFGR 1200
LPTIM_CMP 1204
LPTIM_CNT 1205
LPTIM_CR 1203
LPTIM_ICR 1199
LPTIM_IER 1199
LPTIM_ISR 1198
LPTIM1_OR 1206
LPTIM2_OR 1206
LPUART_BRR 1442
LPUART_CR1 1435
LPUART_CR2 1438
LPUART_CR3 1440
LPUART_ICR 1446
LPUART_ISR 1443
LPUART_RDR 1447
LPUART_RQR 1442
LPUART_TDR 1447

O

OPAMP1_CSR 705
OPAMP1_LPOTR 706
OPAMP1_OTR 706
OPAMP2_CSR 707
OPAMP2_LPOTR 708
OPAMP2_OTR 708
OTG_CID 1729
OTG_DAINT 1754
OTG_DAINTMSK 1755
OTG_DCFG 1747
OTG_DCTL 1749
OTG_DIEPCTL0 1757
OTG_DIEPCTLx 1758
OTG_DIEPEMPMSK 1756
OTG_DIEPINTx 1761
OTG_DIEPMSK 1752
OTG_DIEPTSIZ0 1762
OTG_DIEPTSIZx 1764
OTG_DIEPTXF0 1725
OTG_DIEPTXFx 1736
OTG_DOEPCTL0 1765
OTG_DOEPCTLx 1769
OTG_DOEPINTx 1766
OTG_DOEPMSK 1753
OTG_DOEPTSIZ0 1768
OTG_DOEPTSIZx 1771

OTG_DSTS 1751
OTG_DTXFSTSx 1763
OTG_DVBUSDIS 1755
OTG_DVBUSPULSE 1756
OTG_GADPCTL 1733
OTG_GAHBCFG 1709
OTG_GCCFG 1727
OTG_GINTMSK 1718
OTG_GINTSTS 1714
OTG_GLPMCFG 1729
OTG_GOTGCTL 1705
OTG_GOTGINT 1708
OTG_GPWRDN 1733
OTG_GRSTCTL 1712
OTG_GRXFSIZ 1725
OTG_GRXSTSP 1723-1724
OTG_GRXSTSR 1721-1722
OTG_GUSBCFG 1710
OTG_HAINT 1740
OTG_HAINTMSK 1740
OTG_HCCHARx 1743
OTG_HCFG 1736
OTG_HCINTMSKx 1745
OTG_HCINTx 1744
OTG_HCTSIZx 1746
OTG_HFIR 1737
OTG_HFNUM 1738
OTG_HNPTXFSIZ 1725
OTG_HNPTXSTS 1726
OTG_HPRT 1741
OTG_HPTXFSIZ 1735
OTG_HPTXSTS 1739
OTG_PCGCCTL 1772

P

PWR_CR1 184
PWR_CR2 185
PWR_CR3 186
PWR_CR4 187
PWR_PDCRA 192
PWR_PDCRB 193
PWR_PDCRC 194
PWR_PDCRD 195
PWR_PDCRE 196
PWR_PDCRF 197, 200
PWR_PDCRG 198
PWR_PDCRH 199
PWR_PUCRA 191
PWR_PUCRB 192
PWR_PUCRC 193
PWR_PUCRD 194
PWR_PUCRE 195
PWR_PUCRF 196, 199
PWR_PUCRG 197
PWR_PUCRH 198
PWR_SCR 191
PWR_SR1 188
PWR_SR2 189

Q

QUADSPI _PIR 503
QUADSPI _PSMAR 502
QUADSPI _PSMKR 502
QUADSPI_ABR 501
QUADSPI_AR 500
QUADSPI_CCR 498
QUADSPI_CR 492
QUADSPI_DCR 495
QUADSPI_DLR 497
QUADSPI_DR 501
QUADSPI_FCR 497
QUADSPI_LPTR 503
QUADSPI_SR 496

R

RCC_AHB1ENR 249
RCC_AHB1RSTR 241
RCC_AHB1SMENR 259
RCC_AHB2ENR 251
RCC_AHB2RSTR 242
RCC_AHB2SMENR 261
RCC_AHB3ENR 252
RCC_AHB3RSTR 244
RCC_AHB3SMENR 263
RCC_APB1ENR1 253
RCC_APB1ENR2 256
RCC_APB1RSTR1 244
RCC_APB1RSTR2 247
RCC_APB1SMENR1 263
RCC_APB1SMENR2 266
RCC_APB2ENR 258
RCC_APB2RSTR 248
RCC_APB2SMENR 268
RCC_BDCR 272
RCC_CCIPR 269
RCC_CFGR 227
RCC_CICR 239
RCC_CIER 236
RCC_CIFR 238
RCC_CR 223
RCC_CRRCR 276
RCC_CSR 274

RCC_ICSCR 226
RCC_PLLCFGR 229
RCC_PLLSAI1CFGR 232
RCC_PLLSAI2CFGR 235
RNG_CR 829
RNG_DR 831
RNG_SR 830
RTC_ALRMAR 1253
RTC_ALRMASSR 1264
RTC_ALRMBR 1254
RTC_ALRMBSSR 1265
RTC_BKPxR 1266
RTC_CALR 1260
RTC_CR 1245
RTC_DR 1244
RTC_ISR 1248
RTC_OR 1266
RTC_PRER 1251
RTC_SHIFTR 1256
RTC_SSR 1255
RTC_TAMPCR 1261
RTC_TR 1243
RTC_TSDR 1258
RTC_TSSSR 1259
RTC_TSTR 1257
RTC_WPR 1255
RTC_WUTR 1252

S

SAI_ACLRFR 1536
SAI_ACR1 1515
SAI_ACR2 1521
SAI_ADR 1538
SAI_AFRCR 1525
SAI_AIM 1529
SAI_ASLOTR 1527
SAI_ASR 1532
SAI_BCLRFR 1537
SAI_BCR1 1518
SAI_BCR2 1523
SAI_BDR 1539
SAI_BFRCR 1526
SAI_BIM 1531
SAI_BSLOTR 1528
SAI_BSR 1534
SAI_GCR 1515
SDMMC_ARG 1612
SDMMC_CLKCR 1610
SDMMC_DCOUNT 1618
SDMMC_DCTRL 1615
SDMMC_DLEN 1615
SDMMC_DTIMER 1614
SDMMC_FIFO 1624
SDMMC_ICR 1619
SDMMC_MASK 1621
SDMMC_POWER 1610
SDMMC_RESPCMD 1613
SDMMC_RESPx 1613
SDMMC_STA 1618
SMPMI_IER 1563
SPIx_CR1 1476
SPIx_CR2 1478
SPIx_CRCPR 1482
SPIx_DR 1481
SPIx_RXCRCR 1482
SPIx_SR 1480
SPIx_TXCRCR 1482
SWPMI_BRR 1560
SWPMI_CR 1559
SWPMI_ICR 1562
SWPMI_ISR 1561
SWPMI_OR 1565
SWPMI_RDR 1565
SWPMI_RFL 1564
SWPMI_TDR 1565
SYSCFG_CFGR1 316
SYSCFG_CFGR2 323
SYSCFG_EXTICR1 318
SYSCFG_EXTICR2 319
SYSCFG_EXTICR3 320
SYSCFG_EXTICR4 322
SYSCFG_MEMRMP 315
SYSCFG_SCSR 323
SYSCFG_SKR 325
SYSCFG_SWPR 324
SYSCFG_SWPR2 325

T

TIM1_OR1 998
TIM1_OR2 1002
TIM1_OR3 1003
TIM15_ARR 1139
TIM15_BDTR 1141
TIM15_CCER 1136
TIM15_CCMR1 1132-1133
TIM15_CCR1 1140
TIM15_CCR2 1141
TIM15_CNT 1139
TIM15_CR1 1124
TIM15_CR2 1125
TIM15_DCR 1143
TIM15_DIER 1128

TIM15_DMAR 1144
TIM15_EGR 1131
TIM15_OR1 1144
TIM15_OR2 1145
TIM15_PSC 1139
TIM15_RCR 1140
TIM15_SMCR 1127
TIM15_SR 1129
TIM16_OR1 1165
TIM16_OR2 1165
TIM17_OR1 1167
TIM17_OR2 1167
TIM2_OR1 1080
TIM2_OR2 1081
TIM3_OR1 1081
TIM3_OR2 1082
TIM8_OR1 999
TIM8_OR2 1005
TIM8_OR3 1007
TIMx_ARR 990, 1077, 1160, 1183
TIMx_BDTR 993, 1162
TIMx_CCER 987, 1074, 1157
TIMx_CCMR1 980-981, 1068, 1070, 1154-1155
TIMx_CCMR2 . . . . . 984-985, 1072-1073
TIMx_CCMR3 999
TIMx_CCR1 . . . . . 991, 1077, 1161
TIMx_CCR2 . . . . . .992, 1078
TIMx_CCR3 . . . . . .992, 1078
TIMx_CCR4 . . . . . .993, 1079
TIMx_CCR5 1000
TIMx_CCR6 1001
TIMx_CNT 990, 1075-1076, 1159, 1182
TIMx_CR1 . . . . . 969, 1059, 1149, 1179
TIMx_CR2 . . . . . 970, 1060, 1150, 1181
TIMx_DCR 996, 1080, 1164
TIMx_DIER 975, 1065, 1151, 1181
TIMx_DMAR 997, 1080, 1164
TIMx_EGR 979, 1067, 1153, 1182
TIMx_PSC 990, 1076, 1160, 1183
TIMx_RCR 991, 1161
TIMx_SMCR 973, 1062
TIMx_SR 977, 1066, 1152, 1182
TSC_CR 811
TSC_ICR 814
TSC_IER 813
TSC_IOASCR 816
TSC_IOCCR 817
TSC_IOGCSR 817
TSC_IOGxCR 818
TSC_IOHCR 815
TSC_IOSCR 816
TSC_ISR 815

U

USART_BRR 1395
USART_CR1 1384
USART_CR2 1387
USART_CR3 1391
USART_GTPR 1395
USART_ICR 1403
USART_ISR 1399
USART_RDR 1405
USART_RQR 1398
USART_RTOR 1397
USART_TDR 1405

V

VREFBUF_CCR 684
VREFBUF_CSR 683

W

WWDG_CFR 1222
WWDG_CR 1221
WWDG_SR 1222

IMPORTANT NOTICE – PLEASE READ CAREFULLY

STMicroelectronics NV and its subsidiaries (“ST”) reserve the right to make changes, corrections, enhancements, modifications, and improvements to ST products and/or to this document at any time without notice. Purchasers should obtain the latest relevant information on ST products before placing orders. ST products are sold pursuant to ST’s terms and conditions of sale in place at the time of order acknowledgement.

Purchasers are solely responsible for the choice, selection, and use of ST products and ST assumes no liability for application assistance or the design of Purchasers’ products.

No license, express or implied, to any intellectual property right is granted by ST herein.

Resale of ST products with provisions different from the information set forth herein shall void any warranty granted by ST for such product.

ST and the ST logo are trademarks of ST. For additional information about ST trademarks, please refer to *www.st.com/trademarks*. All other product or service names are the property of their respective owners.

Information in this document supersedes and replaces information previously supplied in any prior versions of this document.

© 2020 STMicroelectronics – All rights reserved