life.augmented

RM0090
Reference manual

STM32F405/415, STM32F407/417, STM32F427/437 and STM32F429/439 advanced Arm®-based 32-bit MCUs

Introduction

This reference manual targets application developers. It provides complete information on how to use the STM32F405xx/07xx, STM32F415xx/17xx, STM32F42xxx and STM32F43xxx microcontroller memory and peripherals.

The STM32F405xx/07xx, STM32F415xx/17xx, STM32F42xxx and STM32F43xxx constitute a family of microcontrollers with different memory sizes, packages and peripherals.

For ordering information, mechanical and electrical device characteristics please refer to the datasheets.

For information on the Arm® Cortex®-M4 with FPU core, please refer to the *Cortex®-M4 with FPU Technical Reference Manual*.

Related documents

Available from STMicroelectronics web site (*http://www.st.com*):

- STM32F40x and STM32F41x datasheets
- STM32F42x and STM32F43x datasheets
- For information on the Arm® *Cortex®*-M4 with FPU*, refe*r to the *STM32F3xx/F4xxx Cortex®*-M4 with FPU *programming manual (PM0214).*

Contents

1 Documentation conventions 57

1.1 List of abbreviations for registers 57

1.2 Glossary 58

1.3 Peripheral availability 58

2 Memory and bus architecture 59

2.1 System architecture 59

2.1.1 I-bus 62

2.1.2 D-bus 62

2.1.3 S-bus 62

2.1.4 DMA memory bus 63

2.1.5 DMA peripheral bus 63

2.1.6 Ethernet DMA bus 63

2.1.7 USB OTG HS DMA bus 63

2.1.8 LCD-TFT controller DMA bus 63

2.1.9 DMA2D bus 63

2.1.10 BusMatrix 63

2.1.11 AHB/APB bridges (APB) 64

2.2 Memory organization 64

2.3 Memory map 64

2.3.1 Embedded SRAM 68

2.3.2 Flash memory overview 68

2.3.3 Bit banding 68

2.4 Boot configuration 69

3 Embedded Flash memory interface 73

3.1 Introduction 73

3.2 Main features 73

3.3 Embedded Flash memory in STM32F405xx/07xx and STM32F415xx/17xx 74

3.4 Embedded Flash memory in STM32F42xxx and STM32F43xxx 76

3.5 Read interface 80

3.5.1 Relation between CPU clock frequency and Flash memory read time . 80

3.5.2 Adaptive real-time memory accelerator (ART Accelerator™) 82
3.6 Erase and program operations 84
3.6.1 Unlocking the Flash control register 84
3.6.2 Program/erase parallelism 85
3.6.3 Erase 85
3.6.4 Programming 86
3.6.5 Read-while-write (RWW) 87
3.6.6 Interrupts 88
3.7 Option bytes 88
3.7.1 Description of user option bytes 88
3.7.2 Programming user option bytes 92
3.7.3 Read protection (RDP) 93
3.7.4 Write protections 94
3.7.5 Proprietary code readout protection (PCROP) 95
3.8 One-time programmable bytes 97
3.9 Flash interface registers 98
3.9.1 Flash access control register (FLASH_ACR) for STM32F405xx/07xx and STM32F415xx/17xx 98
3.9.2 Flash access control register (FLASH_ACR) for STM32F42xxx and STM32F43xxx 99
3.9.3 Flash key register (FLASH_KEYR) 100
3.9.4 Flash option key register (FLASH_OPTKEYR) 100
3.9.5 Flash status register (FLASH_SR) for STM32F405xx/07xx and STM32F415xx/17xx 101
3.9.6 Flash status register (FLASH_SR) for STM32F42xxx and STM32F43xxx 102
3.9.7 Flash control register (FLASH_CR) for STM32F405xx/07xx and STM32F415xx/17xx 103
3.9.8 Flash control register (FLASH_CR) for STM32F42xxx and STM32F43xxx 105
3.9.9 Flash option control register (FLASH_OPTCR) for STM32F405xx/07xx and STM32F415xx/17xx 106
3.9.10 Flash option control register (FLASH_OPTCR) for STM32F42xxx and STM32F43xxx 108
3.9.11 Flash option control register (FLASH_OPTCR1) for STM32F42xxx and STM32F43xxx 110
3.9.12 Flash interface register map 111

4 CRC calculation unit 113

4.1 CRC introduction 113
4.2 CRC main features 113
4.3 CRC functional description 114
4.4 CRC registers 114
4.4.1 Data register (CRC_DR) 114
4.4.2 Independent data register (CRC_IDR) 114
4.4.3 Control register (CRC_CR) 115
4.4.4 CRC register map 115

5 Power controller (PWR) 116
5.1 Power supplies 116
5.1.1 Independent A/D converter supply and reference voltage 117
5.1.2 Battery backup domain 118
5.1.3 Voltage regulator for STM32F405xx/07xx and STM32F415xx/17xx . . 120
5.1.4 Voltage regulator for STM32F42xxx and STM32F43xxx 121
5.2 Power supply supervisor 124
5.2.1 Power-on reset (POR)/power-down reset (PDR) 124
5.2.2 Brownout reset (BOR) 125
5.2.3 Programmable voltage detector (PVD) 125
5.3 Low-power modes 126
5.3.1 Slowing down system clocks 128
5.3.2 Peripheral clock gating 128
5.3.3 Sleep mode 129
5.3.4 Stop mode (STM32F405xx/07xx and STM32F415xx/17xx) 130
5.3.5 Stop mode (STM32F42xxx and STM32F43xxx) 133
5.3.6 Standby mode 136
5.3.7 Programming the RTC alternate functions to wake up the device from the Stop and Standby modes 138
5.4 Power control registers (STM32F405xx/07xx and STM32F415xx/17xx) 141
5.4.1 PWR power control register (PWR_CR) for STM32F405xx/07xx and STM32F415xx/17xx 141
5.4.2 PWR power control/status register (PWR_CSR) for STM32F405xx/07xx and STM32F415xx/17xx 142
5.5 Power control registers (STM32F42xxx and STM32F43xxx) 144
5.5.1 PWR power control register (PWR_CR) for STM32F42xxx and STM32F43xxx 144
5.5.2 PWR power control/status register (PWR_CSR) for STM32F42xxx and STM32F43xxx 147

5.6 PWR register map 149

6 Reset and clock control for STM32F42xxx and STM32F43xxx (RCC) 150

6.1 Reset 150
6.1.1 System reset 150
6.1.2 Power reset 150
6.1.3 Backup domain reset 151
6.2 Clocks 151
6.2.1 HSE clock 154
6.2.2 HSI clock 155
6.2.3 PLL configuration 155
6.2.4 LSE clock 156
6.2.5 LSI clock 156
6.2.6 System clock (SYSCLK) selection 156
6.2.7 Clock security system (CSS) 157
6.2.8 RTC/AWU clock 157
6.2.9 Watchdog clock 158
6.2.10 Clock-out capability 158
6.2.11 Internal/external clock measurement using TIM5/TIM11 158
6.3 RCC registers 161
6.3.1 RCC clock control register (RCC_CR) 161
6.3.2 RCC PLL configuration register (RCC_PLLCFGR) 163
6.3.3 RCC clock configuration register (RCC_CFGR) 165
6.3.4 RCC clock interrupt register (RCC_CIR) 167
6.3.5 RCC AHB1 peripheral reset register (RCC_AHB1RSTR) 170
6.3.6 RCC AHB2 peripheral reset register (RCC_AHB2RSTR) 173
6.3.7 RCC AHB3 peripheral reset register (RCC_AHB3RSTR) 174
6.3.8 RCC APB1 peripheral reset register (RCC_APB1RSTR) 174
6.3.9 RCC APB2 peripheral reset register (RCC_APB2RSTR) 178
6.3.10 RCC AHB1 peripheral clock register (RCC_AHB1ENR) 180
6.3.11 RCC AHB2 peripheral clock enable register (RCC_AHB2ENR) 182
6.3.12 RCC AHB3 peripheral clock enable register (RCC_AHB3ENR) 183
6.3.13 RCC APB1 peripheral clock enable register (RCC_APB1ENR) 183
6.3.14 RCC APB2 peripheral clock enable register (RCC_APB2ENR) 187
6.3.15 RCC AHB1 peripheral clock enable in low power mode register (RCC_AHB1LPENR) 189

6.3.16 RCC AHB2 peripheral clock enable in low power mode register (RCC_AHB2LPENR) 192
6.3.17 RCC AHB3 peripheral clock enable in low power mode register (RCC_AHB3LPENR) 193
6.3.18 RCC APB1 peripheral clock enable in low power mode register (RCC_APB1LPENR) 193
6.3.19 RCC APB2 peripheral clock enabled in low power mode register (RCC_APB2LPENR) 197
6.3.20 RCC Backup domain control register (RCC_BDCR) 199
6.3.21 RCC clock control & status register (RCC_CSR) 200
6.3.22 RCC spread spectrum clock generation register (RCC_SSCGR) 202
6.3.23 RCC PLLI2S configuration register (RCC_PLLI2SCFGR) 203
6.3.24 RCC PLL configuration register (RCC_PLLSAICFGR) 206
6.3.25 RCC Dedicated Clock Configuration Register (RCC_DCKCFGR) . . . 207
6.3.26 RCC register map 210

7 Reset and clock control for STM32F405xx/07xx and STM32F415xx/17xx(RCC) 213

7.1 Reset 213
7.1.1 System reset 213
7.1.2 Power reset 214
7.1.3 Backup domain reset 214
7.2 Clocks 215
7.2.1 HSE clock 217
7.2.2 HSI clock 218
7.2.3 PLL configuration 219
7.2.4 LSE clock 219
7.2.5 LSI clock 220
7.2.6 System clock (SYSCLK) selection 220
7.2.7 Clock security system (CSS) 220
7.2.8 RTC/AWU clock 221
7.2.9 Watchdog clock 221
7.2.10 Clock-out capability 222
7.2.11 Internal/external clock measurement using TIM5/TIM11 222
7.3 RCC registers 224
7.3.1 RCC clock control register (RCC_CR) 224
7.3.2 RCC PLL configuration register (RCC_PLLCFGR) 226
7.3.3 RCC clock configuration register (RCC_CFGR) 228

7.3.4 RCC clock interrupt register (RCC_CIR) 230
7.3.5 RCC AHB1 peripheral reset register (RCC_AHB1RSTR) 233
7.3.6 RCC AHB2 peripheral reset register (RCC_AHB2RSTR) 236
7.3.7 RCC AHB3 peripheral reset register (RCC_AHB3RSTR) 237
7.3.8 RCC APB1 peripheral reset register (RCC_APB1RSTR) 237
7.3.9 RCC APB2 peripheral reset register (RCC_APB2RSTR) 240
7.3.10 RCC AHB1 peripheral clock enable register (RCC_AHB1ENR) 242
7.3.11 RCC AHB2 peripheral clock enable register (RCC_AHB2ENR) 244
7.3.12 RCC AHB3 peripheral clock enable register (RCC_AHB3ENR) 245
7.3.13 RCC APB1 peripheral clock enable register (RCC_APB1ENR) 245
7.3.14 RCC APB2 peripheral clock enable register (RCC_APB2ENR) 248
7.3.15 RCC AHB1 peripheral clock enable in low power mode register (RCC_AHB1LPENR) 250
7.3.16 RCC AHB2 peripheral clock enable in low power mode register (RCC_AHB2LPENR) 252
7.3.17 RCC AHB3 peripheral clock enable in low power mode register (RCC_AHB3LPENR) 253
7.3.18 RCC APB1 peripheral clock enable in low power mode register (RCC_APB1LPENR) 254
7.3.19 RCC APB2 peripheral clock enabled in low power mode register (RCC_APB2LPENR) 257
7.3.20 RCC Backup domain control register (RCC_BDCR) 259
7.3.21 RCC clock control & status register (RCC_CSR) 260
7.3.22 RCC spread spectrum clock generation register (RCC_SSCGR) 262
7.3.23 RCC PLLI2S configuration register (RCC_PLLI2SCFGR) 263
7.3.24 RCC register map 265

8 General-purpose I/Os (GPIO) 267

8.1 GPIO introduction 267
8.2 GPIO main features 267
8.3 GPIO functional description 267
8.3.1 General-purpose I/O (GPIO) 269
8.3.2 I/O pin multiplexer and mapping 270
8.3.3 I/O port control registers 274
8.3.4 I/O port data registers 274
8.3.5 I/O data bitwise handling 274
8.3.6 GPIO locking mechanism 274
8.3.7 I/O alternate function input/output 275

8.3.8 External interrupt/wakeup lines 275
8.3.9 Input configuration 275
8.3.10 Output configuration 276
8.3.11 Alternate function configuration 277
8.3.12 Analog configuration 278
8.3.13 Using the OSC32_IN/OSC32_OUT pins as GPIO PC14/PC15 port pins 278
8.3.14 Using the OSC_IN/OSC_OUT pins as GPIO PH0/PH1 port pins 278
8.3.15 Selection of RTC_AF1 and RTC_AF2 alternate functions 279
8.4 GPIO registers 281
8.4.1 GPIO port mode register (GPIOx_MODER) (x = A..I/J/K) 281
8.4.2 GPIO port output type register (GPIOx_OTYPER) (x = A..I/J/K) 281
8.4.3 GPIO port output speed register (GPIOx_OSPEEDR) (x = A..I/J/K) 282
8.4.4 GPIO port pull-up/pull-down register (GPIOx_PUPDR) (x = A..I/J/K) 282
8.4.5 GPIO port input data register (GPIOx_IDR) (x = A..I/J/K) 283
8.4.6 GPIO port output data register (GPIOx_ODR) (x = A..I/J/K) 283
8.4.7 GPIO port bit set/reset register (GPIOx_BSRR) (x = A..I/J/K) 284
8.4.8 GPIO port configuration lock register (GPIOx_LCKR) (x = A..I/J/K) 284
8.4.9 GPIO alternate function low register (GPIOx_AFRL) (x = A..I/J/K) . . . 285
8.4.10 GPIO alternate function high register (GPIOx_AFRH) (x = A..I/J) 286
8.4.11 GPIO register map 287

9 System configuration controller (SYSCFG) 289
9.1 I/O compensation cell 289
9.2 SYSCFG registers for STM32F405xx/07xx and STM32F415xx/17xx . . 289
9.2.1 SYSCFG memory remap register (SYSCFG_MEMRMP) 289
9.2.2 SYSCFG peripheral mode configuration register (SYSCFG_PMC) . . 290
9.2.3 SYSCFG external interrupt configuration register 1 (SYSCFG_EXTICR1) 291
9.2.4 SYSCFG external interrupt configuration register 2 (SYSCFG_EXTICR2) 291
9.2.5 SYSCFG external interrupt configuration register 3 (SYSCFG_EXTICR3) 292
9.2.6 SYSCFG external interrupt configuration register 4 (SYSCFG_EXTICR4) 293

9.2.7 Compensation cell control register (SYSCFG_CMPCR) 293
9.2.8 SYSCFG register maps for STM32F405xx/07xx and STM32F415xx/17xx 294
9.3 SYSCFG registers for STM32F42xxx and STM32F43xxx 294
9.3.1 SYSCFG memory remap register (SYSCFG_MEMRMP) 294
9.3.2 SYSCFG peripheral mode configuration register (SYSCFG_PMC) . . 296
9.3.3 SYSCFG external interrupt configuration register 1 (SYSCFG_EXTICR1) 297
9.3.4 SYSCFG external interrupt configuration register 2 (SYSCFG_EXTICR2) 298
9.3.5 SYSCFG external interrupt configuration register 3 (SYSCFG_EXTICR3) 298
9.3.6 SYSCFG external interrupt configuration register 4 (SYSCFG_EXTICR4) 299
9.3.7 Compensation cell control register (SYSCFG_CMPCR) 300
9.3.8 SYSCFG register maps for STM32F42xxx and STM32F43xxx 301

10 DMA controller (DMA) 302
10.1 DMA introduction 302
10.2 DMA main features 302
10.3 DMA functional description 304
10.3.1 General description 304
10.3.2 DMA transactions 306
10.3.3 Channel selection 307
10.3.4 Arbiter 308
10.3.5 DMA streams 309
10.3.6 Source, destination and transfer modes 309
10.3.7 Pointer incrementation 312
10.3.8 Circular mode 313
10.3.9 Double buffer mode 313
10.3.10 Programmable data width, packing/unpacking, endianess 314
10.3.11 Single and burst transfers 316
10.3.12 FIFO 317
10.3.13 DMA transfer completion 319
10.3.14 DMA transfer suspension 320
10.3.15 Flow controller 321
10.3.16 Summary of the possible DMA configurations 322
10.3.17 Stream configuration procedure 322

10.3.18 Error management 323
10.4 DMA interrupts 324
10.5 DMA registers 325
10.5.1 DMA low interrupt status register (DMA_LISR) 325
10.5.2 DMA high interrupt status register (DMA_HISR) 326
10.5.3 DMA low interrupt flag clear register (DMA_LIFCR) 327
10.5.4 DMA high interrupt flag clear register (DMA_HIFCR) 327
10.5.5 DMA stream x configuration register (DMA_SxCR) (x = 0..7) 328
10.5.6 DMA stream x number of data register (DMA_SxNDTR) (x = 0..7) . . . 331
10.5.7 DMA stream x peripheral address register (DMA_SxPAR) (x = 0..7) . 332
10.5.8 DMA stream x memory 0 address register (DMA_SxM0AR) (x = 0..7) 332
10.5.9 DMA stream x memory 1 address register (DMA_SxM1AR) (x = 0..7) 332
10.5.10 DMA stream x FIFO control register (DMA_SxFCR) (x = 0..7) 333
10.5.11 DMA register map 335

11 Chrom-Art Accelerator™ controller (DMA2D) 339
11.1 DMA2D introduction 339
11.2 DMA2D main features 340
11.3 DMA2D functional description 340
11.3.1 General description 340
11.3.2 DMA2D control 341
11.3.3 DMA2D foreground and background FIFOs 341
11.3.4 DMA2D foreground and background pixel format converter (PFC) . . . 342
11.3.5 DMA2D foreground and background CLUT interface 344
11.3.6 DMA2D blender 345
11.3.7 DMA2D output PFC 345
11.3.8 DMA2D output FIFO 346
11.3.9 DMA2D AHB master port timer 346
11.3.10 DMA2D transactions 347
11.3.11 DMA2D configuration 347
11.3.12 DMA2D transfer control (start, suspend, abort and completion) 350
11.3.13 Watermark 351
11.3.14 Error management 351
11.3.15 AHB dead time 351
11.4 DMA2D interrupts 351
11.5 DMA2D registers 352

11.5.1 DMA2D control register (DMA2D_CR) 352
11.5.2 DMA2D Interrupt Status Register (DMA2D_ISR) 354
11.5.3 DMA2D interrupt flag clear register (DMA2D_IFCR) 355
11.5.4 DMA2D foreground memory address register (DMA2D_FGMAR) . . . 356
11.5.5 DMA2D foreground offset register (DMA2D_FGOR) 356
11.5.6 DMA2D background memory address register (DMA2D_BGMAR) . . 357
11.5.7 DMA2D background offset register (DMA2D_BGOR) 357
11.5.8 DMA2D foreground PFC control register (DMA2D_FGPFCCR) 358
11.5.9 DMA2D foreground color register (DMA2D_FGCOLR) 360
11.5.10 DMA2D background PFC control register (DMA2D_BGPFCCR) 361
11.5.11 DMA2D background color register (DMA2D_BGCOLR) 363
11.5.12 DMA2D foreground CLUT memory address register (DMA2D_FGCMAR) 363
11.5.13 DMA2D background CLUT memory address register (DMA2D_BGCMAR) 364
11.5.14 DMA2D output PFC control register (DMA2D_OPFCCR) 364
11.5.15 DMA2D output color register (DMA2D_OCOLR) 365
11.5.16 DMA2D output memory address register (DMA2D_OMAR) 366
11.5.17 DMA2D output offset register (DMA2D_OOR) 367
11.5.18 DMA2D number of line register (DMA2D_NLR) 367
11.5.19 DMA2D line watermark register (DMA2D_LWR) 368
11.5.20 DMA2D AHB master timer configuration register (DMA2D_AMTCR) . 368
11.5.21 DMA2D register map 369

12 Interrupts and events 371

12.1 Nested vectored interrupt controller (NVIC) 371
12.1.1 NVIC features 371
12.1.2 SysTick calibration value register 371
12.1.3 Interrupt and exception vectors 371
12.2 External interrupt/event controller (EXTI) 371
12.2.1 EXTI main features 379
12.2.2 EXTI block diagram 380
12.2.3 Wakeup event management 380
12.2.4 Functional description 380
12.2.5 External interrupt/event line mapping 382
12.3 EXTI registers 384
12.3.1 Interrupt mask register (EXTI_IMR) 384

12.3.2 Event mask register (EXTI_EMR) 384
12.3.3 Rising trigger selection register (EXTI_RTSR) 385
12.3.4 Falling trigger selection register (EXTI_FTSR) 385
12.3.5 Software interrupt event register (EXTI_SWIER) 386
12.3.6 Pending register (EXTI_PR) 386
12.3.7 EXTI register map 387

13 Analog-to-digital converter (ADC) 388
13.1 ADC introduction 388
13.2 ADC main features 388
13.3 ADC functional description 389
13.3.1 ADC on-off control 390
13.3.2 ADC clock 390
13.3.3 Channel selection 390
13.3.4 Single conversion mode 391
13.3.5 Continuous conversion mode 392
13.3.6 Timing diagram 392
13.3.7 Analog watchdog 392
13.3.8 Scan mode 393
13.3.9 Injected channel management 394
13.3.10 Discontinuous mode 395
13.4 Data alignment 396
13.5 Channel-wise programmable sampling time 397
13.6 Conversion on external trigger and trigger polarity 397
13.7 Fast conversion mode 399
13.8 Data management 400
13.8.1 Using the DMA 400
13.8.2 Managing a sequence of conversions without using the DMA 400
13.8.3 Conversions without DMA and without overrun detection 401
13.9 Multi ADC mode 401
13.9.1 Injected simultaneous mode 404
13.9.2 Regular simultaneous mode 405
13.9.3 Interleaved mode 407
13.9.4 Alternate trigger mode 408
13.9.5 Combined regular/injected simultaneous mode 410
13.9.6 Combined regular simultaneous + alternate trigger mode 411

13.10 Temperature sensor 412
13.11 Battery charge monitoring 414
13.12 ADC interrupts 414
13.13 ADC registers 415
13.13.1 ADC status register (ADC_SR) 415
13.13.2 ADC control register 1 (ADC_CR1) 416
13.13.3 ADC control register 2 (ADC_CR2) 418
13.13.4 ADC sample time register 1 (ADC_SMPR1) 420
13.13.5 ADC sample time register 2 (ADC_SMPR2) 420
13.13.6 ADC injected channel data offset register x (ADC_JOFRx) (x=1..4) . . 421
13.13.7 ADC watchdog higher threshold register (ADC_HTR) 421
13.13.8 ADC watchdog lower threshold register (ADC_LTR) 422
13.13.9 ADC regular sequence register 1 (ADC_SQR1) 422
13.13.10 ADC regular sequence register 2 (ADC_SQR2) 423
13.13.11 ADC regular sequence register 3 (ADC_SQR3) 423
13.13.12 ADC injected sequence register (ADC_JSQR) 424
13.13.13 ADC injected data register x (ADC_JDRx) (x= 1..4) 425
13.13.14 ADC regular data register (ADC_DR) 425
13.13.15 ADC Common status register (ADC_CSR) 426
13.13.16 ADC common control register (ADC_CCR) 427
13.13.17 ADC common regular data register for dual and triple modes (ADC_CDR) 430
13.13.18 ADC register map 430

14 Digital-to-analog converter (DAC) 433
14.1 DAC introduction 433
14.2 DAC main features 433
14.3 DAC functional description 435
14.3.1 DAC channel enable 435
14.3.2 DAC output buffer enable 435
14.3.3 DAC data format 435
14.3.4 DAC conversion 436
14.3.5 DAC output voltage 437
14.3.6 DAC trigger selection 437
14.3.7 DMA request 438
14.3.8 Noise generation 438
14.3.9 Triangle-wave generation 439

14.4 Dual DAC channel conversion 440
14.4.1 Independent trigger without wave generation 441
14.4.2 Independent trigger with single LFSR generation 441
14.4.3 Independent trigger with different LFSR generation 441
14.4.4 Independent trigger with single triangle generation 442
14.4.5 Independent trigger with different triangle generation 442
14.4.6 Simultaneous software start 442
14.4.7 Simultaneous trigger without wave generation 443
14.4.8 Simultaneous trigger with single LFSR generation 443
14.4.9 Simultaneous trigger with different LFSR generation 443
14.4.10 Simultaneous trigger with single triangle generation 444
14.4.11 Simultaneous trigger with different triangle generation 444
14.5 DAC registers 445
14.5.1 DAC control register (DAC_CR) 445
14.5.2 DAC software trigger register (DAC_SWTRIGR) 448
14.5.3 DAC channel1 12-bit right-aligned data holding register (DAC_DHR12R1) 448
14.5.4 DAC channel1 12-bit left aligned data holding register (DAC_DHR12L1) 449
14.5.5 DAC channel1 8-bit right aligned data holding register (DAC_DHR8R1) 449
14.5.6 DAC channel2 12-bit right aligned data holding register (DAC_DHR12R2) 450
14.5.7 DAC channel2 12-bit left aligned data holding register (DAC_DHR12L2) 450
14.5.8 DAC channel2 8-bit right-aligned data holding register (DAC_DHR8R2) 450
14.5.9 Dual DAC 12-bit right-aligned data holding register (DAC_DHR12RD) 451
14.5.10 DUAL DAC 12-bit left aligned data holding register (DAC_DHR12LD) 451
14.5.11 DUAL DAC 8-bit right aligned data holding register (DAC_DHR8RD) 452
14.5.12 DAC channel1 data output register (DAC_DOR1) 452
14.5.13 DAC channel2 data output register (DAC_DOR2) 452
14.5.14 DAC status register (DAC_SR) 453
14.5.15 DAC register map 453

15 Digital camera interface (DCMI) 455

15.1 DCMI introduction 455
15.2 DCMI main features 455
15.3 DCMI pins 455
15.4 DCMI clocks 455
15.5 DCMI functional overview 456
15.5.1 DMA interface 457
15.5.2 DCMI physical interface 457
15.5.3 Synchronization 459
15.5.4 Capture modes 462
15.5.5 Crop feature 463
15.5.6 JPEG format 465
15.5.7 FIFO 465
15.6 Data format description 465
15.6.1 Data formats 465
15.6.2 Monochrome format 466
15.6.3 RGB format 466
15.6.4 YCbCr format 466
15.7 DCMI interrupts 467
15.8 DCMI register description 467
15.8.1 DCMI control register 1 (DCMI_CR) 467
15.8.2 DCMI status register (DCMI_SR) 470
15.8.3 DCMI raw interrupt status register (DCMI_RIS) 471
15.8.4 DCMI interrupt enable register (DCMI_IER) 472
15.8.5 DCMI masked interrupt status register (DCMI_MIS) 473
15.8.6 DCMI interrupt clear register (DCMI_ICR) 474
15.8.7 DCMI embedded synchronization code register (DCMI_ESCR) 475
15.8.8 DCMI embedded synchronization unmask register (DCMI_ESUR) . . 476
15.8.9 DCMI crop window start (DCMI_CWSTRT) 477
15.8.10 DCMI crop window size (DCMI_CWSIZE) 477
15.8.11 DCMI data register (DCMI_DR) 478
15.8.12 DCMI register map 478

16 LCD-TFT controller (LTDC) 480
16.1 Introduction 480
16.2 LTDC main features 480
16.3 LTDC functional description 481

16.3.1 LTDC block diagram 481
16.3.2 LTDC reset and clocks 481
16.3.3 LCD-TFT pins and signal interface 483
16.4 LTDC programmable parameters 483
16.4.1 LTDC Global configuration parameters 483
16.4.2 Layer programmable parameters 486
16.5 LTDC interrupts 490
16.6 LTDC programming procedure 492
16.7 LTDC registers 493
16.7.1 LTDC Synchronization Size Configuration Register (LTDC_SSCR) . . 493
16.7.2 LTDC Back Porch Configuration Register (LTDC_BPCR) 493
16.7.3 LTDC Active Width Configuration Register (LTDC_AWCR) 494
16.7.4 LTDC Total Width Configuration Register (LTDC_TWCR) 495
16.7.5 LTDC Global Control Register (LTDC_GCR) 495
16.7.6 LTDC Shadow Reload Configuration Register (LTDC_SRCR) 497
16.7.7 LTDC Background Color Configuration Register (LTDC_BCCR) 497
16.7.8 LTDC Interrupt Enable Register (LTDC_IER) 498
16.7.9 LTDC Interrupt Status Register (LTDC_ISR) 499
16.7.10 LTDC Interrupt Clear Register (LTDC_ICR) 499
16.7.11 LTDC Line Interrupt Position Configuration Register (LTDC_LIPCR) . 500
16.7.12 LTDC Current Position Status Register (LTDC_CPSR) 500
16.7.13 LTDC Current Display Status Register (LTDC_CDSR) 501
16.7.14 LTDC Layerx Control Register (LTDC_LxCR) (where x=1..2) 502
16.7.15 LTDC Layerx Window Horizontal Position Configuration Register (LTDC_LxWHPCR) (where x=1..2) 503
16.7.16 LTDC Layerx Window Vertical Position Configuration Register (LTDC_LxWVPCR) (where x=1..2) 504
16.7.17 LTDC Layerx Color Keying Configuration Register (LTDC_LxCKCR) (where x=1..2) 505
16.7.18 LTDC Layerx Pixel Format Configuration Register (LTDC_LxPFCR) (where x=1..2) 505
16.7.19 LTDC Layerx Constant Alpha Configuration Register (LTDC_LxCACR) (where x=1..2) 506
16.7.20 LTDC Layerx Default Color Configuration Register (LTDC_LxDCCR) (where x=1..2) 506
16.7.21 LTDC Layerx Blending Factors Configuration Register (LTDC_LxBFCR) (where x=1..2) 508
16.7.22 LTDC Layerx Color Frame Buffer Address Register (LTDC_LxCFBAR) (where x=1..2) 509

16.7.23 LTDC Layerx Color Frame Buffer Length Register (LTDC_LxCFBLR) (where x=1..2) . . . 509
16.7.24 LTDC Layerx ColorFrame Buffer Line Number Register (LTDC_LxCFBLNR) (where x=1..2) . . . 510
16.7.25 LTDC Layerx CLUT Write Register (LTDC_LxCLUTWR) (where x=1..2) . . . 511
16.7.26 LTDC register map . . . 512

17 Advanced-control timers (TIM1 and TIM8) . . . 515

17.1 TIM1 and TIM8 introduction . . . 515
17.2 TIM1 and TIM8 main features . . . 516
17.3 TIM1 and TIM8 functional description . . . 518
17.3.1 Time-base unit . . . 518
17.3.2 Counter modes . . . 520
17.3.3 Repetition counter . . . 529
17.3.4 Clock selection . . . 532
17.3.5 Capture/compare channels . . . 535
17.3.6 Input capture mode . . . 538
17.3.7 PWM input mode . . . 539
17.3.8 Forced output mode . . . 539
17.3.9 Output compare mode . . . 540
17.3.10 PWM mode . . . 541
17.3.11 Complementary outputs and dead-time insertion . . . 544
17.3.12 Using the break function . . . 546
17.3.13 Clearing the OCxREF signal on an external event . . . 549
17.3.14 6-step PWM generation . . . 550
17.3.15 One-pulse mode . . . 551
17.3.16 Encoder interface mode . . . 552
17.3.17 Timer input XOR function . . . 555
17.3.18 Interfacing with Hall sensors . . . 555
17.3.19 TIMx and external trigger synchronization . . . 557
17.3.20 Timer synchronization . . . 560
17.3.21 Debug mode . . . 560
17.4 TIM1 and TIM8 registers . . . 561
17.4.1 TIM1 and TIM8 control register 1 (TIMx_CR1) . . . 561
17.4.2 TIM1 and TIM8 control register 2 (TIMx_CR2) . . . 562
17.4.3 TIM1 and TIM8 slave mode control register (TIMx_SMCR) . . . 565
17.4.4 TIM1 and TIM8 DMA/interrupt enable register (TIMx_DIER) . . . 567

17.4.5 TIM1 and TIM8 status register (TIMx_SR) 569
17.4.6 TIM1 and TIM8 event generation register (TIMx_EGR) 570
17.4.7 TIM1 and TIM8 capture/compare mode register 1 (TIMx_CCMR1) . . 572
17.4.8 TIM1 and TIM8 capture/compare mode register 2 (TIMx_CCMR2) . . 575
17.4.9 TIM1 and TIM8 capture/compare enable register (TIMx_CCER) 576
17.4.10 TIM1 and TIM8 counter (TIMx_CNT) 580
17.4.11 TIM1 and TIM8 prescaler (TIMx_PSC) 580
17.4.12 TIM1 and TIM8 auto-reload register (TIMx_ARR) 580
17.4.13 TIM1 and TIM8 repetition counter register (TIMx_RCR) 581
17.4.14 TIM1 and TIM8 capture/compare register 1 (TIMx_CCR1) 581
17.4.15 TIM1 and TIM8 capture/compare register 2 (TIMx_CCR2) 582
17.4.16 TIM1 and TIM8 capture/compare register 3 (TIMx_CCR3) 582
17.4.17 TIM1 and TIM8 capture/compare register 4 (TIMx_CCR4) 583
17.4.18 TIM1 and TIM8 break and dead-time register (TIMx_BDTR) 583
17.4.19 TIM1 and TIM8 DMA control register (TIMx_DCR) 585
17.4.20 TIM1 and TIM8 DMA address for full transfer (TIMx_DMAR) 586
17.4.21 TIM1 and TIM8 register map 587

18 General-purpose timers (TIM2 to TIM5) 589

18.1 TIM2 to TIM5 introduction 589
18.2 TIM2 to TIM5 main features 589
18.3 TIM2 to TIM5 functional description 591
18.3.1 Time-base unit 591
18.3.2 Counter modes 592
18.3.3 Clock selection 602
18.3.4 Capture/compare channels 605
18.3.5 Input capture mode 607
18.3.6 PWM input mode 608
18.3.7 Forced output mode 609
18.3.8 Output compare mode 609
18.3.9 PWM mode 610
18.3.10 One-pulse mode 613
18.3.11 Clearing the OCxREF signal on an external event 614
18.3.12 Encoder interface mode 615
18.3.13 Timer input XOR function 618
18.3.14 Timers and external trigger synchronization 618
18.3.15 Timer synchronization 621

18.3.16 Debug mode 626
18.4 TIM2 to TIM5 registers 627
18.4.1 TIMx control register 1 (TIMx_CR1) 627
18.4.2 TIMx control register 2 (TIMx_CR2) 629
18.4.3 TIMx slave mode control register (TIMx_SMCR) 630
18.4.4 TIMx DMA/Interrupt enable register (TIMx_DIER) 632
18.4.5 TIMx status register (TIMx_SR) 633
18.4.6 TIMx event generation register (TIMx_EGR) 635
18.4.7 TIMx capture/compare mode register 1 (TIMx_CCMR1) 636
18.4.8 TIMx capture/compare mode register 2 (TIMx_CCMR2) 639
18.4.9 TIMx capture/compare enable register (TIMx_CCER) 640
18.4.10 TIMx counter (TIMx_CNT) 642
18.4.11 TIMx prescaler (TIMx_PSC) 642
18.4.12 TIMx auto-reload register (TIMx_ARR) 642
18.4.13 TIMx capture/compare register 1 (TIMx_CCR1) 643
18.4.14 TIMx capture/compare register 2 (TIMx_CCR2) 643
18.4.15 TIMx capture/compare register 3 (TIMx_CCR3) 644
18.4.16 TIMx capture/compare register 4 (TIMx_CCR4) 644
18.4.17 TIMx DMA control register (TIMx_DCR) 645
18.4.18 TIMx DMA address for full transfer (TIMx_DMAR) 646
18.4.19 TIM2 option register (TIM2_OR) 647
18.4.20 TIM5 option register (TIM5_OR) 647
18.4.21 TIMx register map 648

19 General-purpose timers (TIM9 to TIM14) 650
19.1 TIM9 to TIM14 introduction 650
19.2 TIM9 to TIM14 main features 650
19.2.1 TIM9/TIM12 main features 650
19.2.2 TIM10/TIM11 and TIM13/TIM14 main features 651
19.3 TIM9 to TIM14 functional description 653
19.3.1 Time-base unit 653
19.3.2 Counter modes 655
19.3.3 Clock selection 658
19.3.4 Capture/compare channels 660
19.3.5 Input capture mode 661
19.3.6 PWM input mode (only for TIM9/12) 663
19.3.7 Forced output mode 664

19.3.8 Output compare mode 664
19.3.9 PWM mode 665
19.3.10 One-pulse mode 666
19.3.11 TIM9/12 external trigger synchronization 668
19.3.12 Timer synchronization (TIM9/12) 671
19.3.13 Debug mode 671
19.4 TIM9 and TIM12 registers 672
19.4.1 TIM9/12 control register 1 (TIMx_CR1) 672
19.4.2 TIM9/12 slave mode control register (TIMx_SMCR) 673
19.4.3 TIM9/12 Interrupt enable register (TIMx_DIER) 674
19.4.4 TIM9/12 status register (TIMx_SR) 676
19.4.5 TIM9/12 event generation register (TIMx_EGR) 677
19.4.6 TIM9/12 capture/compare mode register 1 (TIMx_CCMR1) 678
19.4.7 TIM9/12 capture/compare enable register (TIMx_CCER) 681
19.4.8 TIM9/12 counter (TIMx_CNT) 682
19.4.9 TIM9/12 prescaler (TIMx_PSC) 682
19.4.10 TIM9/12 auto-reload register (TIMx_ARR) 682
19.4.11 TIM9/12 capture/compare register 1 (TIMx_CCR1) 683
19.4.12 TIM9/12 capture/compare register 2 (TIMx_CCR2) 683
19.4.13 TIM9/12 register map 684
19.5 TIM10/11/13/14 registers 686
19.5.1 TIM10/11/13/14 control register 1 (TIMx_CR1) 686
19.5.2 TIM10/11/13/14 Interrupt enable register (TIMx_DIER) 687
19.5.3 TIM10/11/13/14 status register (TIMx_SR) 687
19.5.4 TIM10/11/13/14 event generation register (TIMx_EGR) 688
19.5.5 TIM10/11/13/14 capture/compare mode register 1 (TIMx_CCMR1) . . 688
19.5.6 TIM10/11/13/14 capture/compare enable register (TIMx_CCER) 691
19.5.7 TIM10/11/13/14 counter (TIMx_CNT) 692
19.5.8 TIM10/11/13/14 prescaler (TIMx_PSC) 692
19.5.9 TIM10/11/13/14 auto-reload register (TIMx_ARR) 692
19.5.10 TIM10/11/13/14 capture/compare register 1 (TIMx_CCR1) 693
19.5.11 TIM11 option register 1 (TIM11_OR) 693
19.5.12 TIM10/11/13/14 register map 694

20 Basic timers (TIM6 and TIM7) 696
20.1 TIM6 and TIM7 introduction 696
20.2 TIM6 and TIM7 main features 696

20.3 TIM6 and TIM7 functional description 697
20.3.1 Time-base unit 697
20.3.2 Counting mode 699
20.3.3 Clock source 701
20.3.4 Debug mode 702
20.4 TIM6 and TIM7 registers 702
20.4.1 TIM6 and TIM7 control register 1 (TIMx_CR1) 702
20.4.2 TIM6 and TIM7 control register 2 (TIMx_CR2) 704
20.4.3 TIM6 and TIM7 DMA/Interrupt enable register (TIMx_DIER) 704
20.4.4 TIM6 and TIM7 status register (TIMx_SR) 705
20.4.5 TIM6 and TIM7 event generation register (TIMx_EGR) 705
20.4.6 TIM6 and TIM7 counter (TIMx_CNT) 705
20.4.7 TIM6 and TIM7 prescaler (TIMx_PSC) 706
20.4.8 TIM6 and TIM7 auto-reload register (TIMx_ARR) 706
20.4.9 TIM6 and TIM7 register map 707

21 Independent watchdog (IWDG) 708
21.1 IWDG introduction 708
21.2 IWDG main features 708
21.3 IWDG functional description 708
21.3.1 Hardware watchdog 708
21.3.2 Register access protection 708
21.3.3 Debug mode 709
21.4 IWDG registers 710
21.4.1 Key register (IWDG_KR) 710
21.4.2 Prescaler register (IWDG_PR) 710
21.4.3 Reload register (IWDG_RLR) 711
21.4.4 Status register (IWDG_SR) 711
21.4.5 IWDG register map 712

22 Window watchdog (WWDG) 713
22.1 WWDG introduction 713
22.2 WWDG main features 713
22.3 WWDG functional description 713
22.4 How to program the watchdog timeout 715
22.5 Debug mode 716

22.6 WWDG registers 717
22.6.1 Control register (WWDG_CR) 717
22.6.2 Configuration register (WWDG_CFR) 718
22.6.3 Status register (WWDG_SR) 718
22.6.4 WWDG register map 719

23 Cryptographic processor (CRYP) 720
23.1 CRYP introduction 720
23.2 CRYP main features 720
23.3 CRYP functional description 722
23.3.1 DES/TDES cryptographic core 723
23.3.2 AES cryptographic core 728
23.3.3 Data type 739
23.3.4 Initialization vectors - CRYP_IV0...1(L/R) 742
23.3.5 CRYP busy state 743
23.3.6 Procedure to perform an encryption or a decryption 744
23.3.7 Context swapping 745
23.4 CRYP interrupts 747
23.5 CRYP DMA interface 748
23.6 CRYP registers 748
23.6.1 CRYP control register (CRYP_CR) for STM32F415/417xx 748
23.6.2 CRYP control register (CRYP_CR) for STM32F415/417xx 750
23.6.3 CRYP status register (CRYP_SR) 753
23.6.4 CRYP data input register (CRYP_DIN) 754
23.6.5 CRYP data output register (CRYP_DOUT) 755
23.6.6 CRYP DMA control register (CRYP_DMACR) 756
23.6.7 CRYP interrupt mask set/clear register (CRYP_IMSCR) 756
23.6.8 CRYP raw interrupt status register (CRYP_RISR) 757
23.6.9 CRYP masked interrupt status register (CRYP_MISR) 757
23.6.10 CRYP key registers (CRYP_K0...3(L/R)R) 758
23.6.11 CRYP initialization vector registers (CRYP_IV0...1(L/R)R) 760
23.6.12 CRYP context swap registers (CRYP_CSGCMCCM0..7R and CRYP_CSGCM0..7R) for STM32F42xxx and STM32F43xxx 762
23.6.13 CRYP register map 763

24 Random number generator (RNG) 767
24.1 RNG introduction 767

24.2 RNG main features 767
24.3 RNG functional description 767
24.3.1 Operation 768
24.3.2 Error management 768
24.4 RNG registers 768
24.4.1 RNG control register (RNG_CR) 769
24.4.2 RNG status register (RNG_SR) 769
24.4.3 RNG data register (RNG_DR) 770
24.4.4 RNG register map 771

25 Hash processor (HASH) 772
25.1 HASH introduction 772
25.2 HASH main features 772
25.3 HASH functional description 773
25.3.1 Duration of the processing 775
25.3.2 Data type 775
25.3.3 Message digest computing 777
25.3.4 Message padding 778
25.3.5 Hash operation 779
25.3.6 HMAC operation 779
25.3.7 Context swapping 780
25.3.8 HASH interrupt 782
25.4 HASH registers 782
25.4.1 HASH control register (HASH_CR) for STM32F415/417xx 782
25.4.2 HASH control register (HASH_CR) for STM32F43xxx 785
25.4.3 HASH data input register (HASH_DIN) 788
25.4.4 HASH start register (HASH_STR) 789
25.4.5 HASH digest registers (HASH_HR0..4/5/6/7) 790
25.4.6 HASH interrupt enable register (HASH_IMR) 792
25.4.7 HASH status register (HASH_SR) 793
25.4.8 HASH context swap registers (HASH_CSRx) 794
25.4.9 HASH register map 795

26 Real-time clock (RTC) 798
26.1 Introduction 798
26.2 RTC main features 799

26.3 RTC functional description 801
26.3.1 Clock and prescalers 801
26.3.2 Real-time clock and calendar 802
26.3.3 Programmable alarms 802
26.3.4 Periodic auto-wakeup 802
26.3.5 RTC initialization and configuration 803
26.3.6 Reading the calendar 805
26.3.7 Resetting the RTC 806
26.3.8 RTC synchronization 806
26.3.9 RTC reference clock detection 807
26.3.10 RTC coarse digital calibration 808
26.3.11 RTC smooth digital calibration 809
26.3.12 Timestamp function 811
26.3.13 Tamper detection 811
26.3.14 Calibration clock output 813
26.3.15 Alarm output 813
26.4 RTC and low-power modes 814
26.5 RTC interrupts 814
26.6 RTC registers 816
26.6.1 RTC time register (RTC_TR) 816
26.6.2 RTC date register (RTC_DR) 817
26.6.3 RTC control register (RTC_CR) 818
26.6.4 RTC initialization and status register (RTC_ISR) 820
26.6.5 RTC prescaler register (RTC_PRER) 823
26.6.6 RTC wakeup timer register (RTC_WUTR) 823
26.6.7 RTC calibration register (RTC_CALIBR) 824
26.6.8 RTC alarm A register (RTC_ALRMAR) 825
26.6.9 RTC alarm B register (RTC_ALRMBR) 826
26.6.10 RTC write protection register (RTC_WPR) 827
26.6.11 RTC sub second register (RTC_SSR) 827
26.6.12 RTC shift control register (RTC_SHIFTR) 828
26.6.13 RTC time stamp time register (RTC_TSTR) 828
26.6.14 RTC time stamp date register (RTC_TSDR) 829
26.6.15 RTC timestamp sub second register (RTC_TSSSR) 830
26.6.16 RTC calibration register (RTC_CALR) 830
26.6.17 RTC tamper and alternate function configuration register (RTC_TAFCR) 832

26.6.18 RTC alarm A sub second register (RTC_ALRMASSR) 834
26.6.19 RTC alarm B sub second register (RTC_ALRMBSSR) 835
26.6.20 RTC backup registers (RTC_BKPxR) 836
26.6.21 RTC register map 836

27 Inter-integrated circuit (I2C) interface 839

27.1 I^2C introduction 839
27.2 I^2C main features 839
27.3 I^2C functional description 840
27.3.1 Mode selection 840
27.3.2 I2C slave mode 843
27.3.3 I2C master mode 846
27.3.4 Error conditions 851
27.3.5 Programmable noise filter 852
27.3.6 SDA/SCL line control 853
27.3.7 SMBus 853
27.3.8 DMA requests 856
27.3.9 Packet error checking 857
27.4 I^2C interrupts 858
27.5 I^2C debug mode 860
27.6 I^2C registers 860
27.6.1 I^2C Control register 1 (I2C_CR1) 860
27.6.2 I^2C Control register 2 (I2C_CR2) 862
27.6.3 I^2C Own address register 1 (I2C_OAR1) 864
27.6.4 I^2C Own address register 2 (I2C_OAR2) 864
27.6.5 I^2C Data register (I2C_DR) 865
27.6.6 I^2C Status register 1 (I2C_SR1) 865
27.6.7 I^2C Status register 2 (I2C_SR2) 868
27.6.8 I^2C Clock control register (I2C_CCR) 870
27.6.9 I^2C TRISE register (I2C_TRISE) 871
27.6.10 I^2C FLTR register (I2C_FLTR) 871
27.6.11 I2C register map 872

28 Serial peripheral interface (SPI) 873

28.1 SPI introduction 873
28.2 SPI and I^2S main features 874

28.2.1 SPI features 874
28.2.2 I^{2}S features 875
28.3 SPI functional description 876
28.3.1 General description 876
28.3.2 Configuring the SPI in slave mode 880
28.3.3 Configuring the SPI in master mode 882
28.3.4 Configuring the SPI for half-duplex communication 884
28.3.5 Data transmission and reception procedures 885
28.3.6 CRC calculation 891
28.3.7 Status flags 893
28.3.8 Disabling the SPI 894
28.3.9 SPI communication using DMA (direct memory addressing) 895
28.3.10 Error flags 897
28.3.11 SPI interrupts 898
28.4 I^{2}S functional description 899
28.4.1 I^{2}S general description 899
28.4.2 I2S full duplex 900
28.4.3 Supported audio protocols 901
28.4.4 Clock generator 907
28.4.5 I^{2}S master mode 909
28.4.6 I^{2}S slave mode 911
28.4.7 Status flags 913
28.4.8 Error flags 914
28.4.9 I^{2}S interrupts 915
28.4.10 DMA features 915
28.5 SPI and I^{2}S registers 916
28.5.1 SPI control register 1 (SPI_CR1) (not used in I^{2}S mode) 916
28.5.2 SPI control register 2 (SPI_CR2) 918
28.5.3 SPI status register (SPI_SR) 919
28.5.4 SPI data register (SPI_DR) 920
28.5.5 SPI CRC polynomial register (SPI_CRCPR) (not used in I^{2}S mode) 921
28.5.6 SPI RX CRC register (SPI_RXCRCR) (not used in I^{2}S mode) 921
28.5.7 SPI TX CRC register (SPI_TXCRCR) (not used in I^{2}S mode) 922
28.5.8 SPI_I^{2}S configuration register (SPI_I2SCFGR) 922
28.5.9 SPI_I^{2}S prescaler register (SPI_I2SPR) 923
28.5.10 SPI register map 925

29 Serial audio interface (SAI) 926

29.1 Introduction 926
29.2 Main features 927
29.3 Functional block diagram 928
29.4 Main SAI modes 929
29.5 SAI synchronization mode 930
29.6 Audio data size 930
29.7 Frame synchronization 930
29.7.1 Frame length 931
29.7.2 Frame synchronization polarity 931
29.7.3 Frame synchronization active level length 932
29.7.4 Frame synchronization offset 932
29.7.5 FS signal role 932
29.8 Slot configuration 933
29.9 SAI clock generator 935
29.10 Internal FIFOs 936
29.11 AC’97 link controller 939
29.12 Specific features 940
29.12.1 Mute mode 940
29.12.2 MONO/STEREO function 940
29.12.3 Companding mode 941
29.12.4 Output data line management on an inactive slot 942
29.13 Error flags 944
29.13.1 FIFO overrun/underrun (OVRUDR) 944
29.13.2 Anticipated frame synchronisation detection (AFSDET) 946
29.13.3 Late frame synchronization detection 946
29.13.4 Codec not ready (CNRDY AC’97) 947
29.13.5 Wrong clock configuration in master mode (with NODIV = 0) 947
29.14 Interrupt sources 948
29.15 Disabling the SAI 948
29.16 SAI DMA interface 949
29.17 SAI registers 950
29.17.1 SAI xConfiguration register 1 (SAI_xCR1) where x is A or B 950
29.17.2 SAI xConfiguration register 2 (SAI_xCR2) where x is A or B 953
29.17.3 SAI xFrame configuration register (SAI_XFRCR) where x is A or B . . 955

29.17.4 SAI xSlot register (SAI_xSLOTR) where x is A or B 957
29.17.5 SAI xInterrupt mask register (SAI_xIM) where x is A or B 958
29.17.6 SAI xStatus register (SAI_xSR) where x is A or B 960
29.17.7 SAI xClear flag register (SAI_xCLRFR) where X is A or B 962
29.17.8 SAI xData register (SAI_xDR) where x is A or B 963
29.17.9 SAI register map 963

30 Universal synchronous asynchronous receiver transmitter (USART) 965

30.1 USART introduction 965
30.2 USART main features 965
30.3 USART functional description 966
30.3.1 USART character description 969
30.3.2 Transmitter 970
30.3.3 Receiver 973
30.3.4 Fractional baud rate generation 978
30.3.5 USART receiver tolerance to clock deviation 988
30.3.6 Multiprocessor communication 989
30.3.7 Parity control 991
30.3.8 LIN (local interconnection network) mode 992
30.3.9 USART synchronous mode 994
30.3.10 Single-wire half-duplex communication 996
30.3.11 Smartcard 997
30.3.12 IrDA SIR ENDEC block 999
30.3.13 Continuous communication using DMA 1001
30.3.14 Hardware flow control 1003
30.4 USART interrupts 1006
30.5 USART mode configuration 1007
30.6 USART registers 1007
30.6.1 Status register (USART_SR) 1007
30.6.2 Data register (USART_DR) 1010
30.6.3 Baud rate register (USART_BRR) 1010
30.6.4 Control register 1 (USART_CR1) 1010
30.6.5 Control register 2 (USART_CR2) 1013
30.6.6 Control register 3 (USART_CR3) 1014
30.6.7 Guard time and prescaler register (USART_GTPR) 1017
30.6.8 USART register map 1018

31 Secure digital input/output interface (SDIO) 1019

31.1 SDIO main features 1019

31.2 SDIO bus topology 1020

31.3 SDIO functional description 1022

31.3.1 SDIO adapter 1023

31.3.2 SDIO APB2 interface 1033

31.4 Card functional description 1034

31.4.1 Card identification mode 1034

31.4.2 Card reset 1034

31.4.3 Operating voltage range validation 1034

31.4.4 Card identification process 1035

31.4.5 Block write 1036

31.4.6 Block read 1037

31.4.7 Stream access, stream write and stream read (MultiMediaCard only) 1037

31.4.8 Erase: group erase and sector erase 1039

31.4.9 Wide bus selection or deselection 1039

31.4.10 Protection management 1039

31.4.11 Card status register 1042

31.4.12 SD status register 1045

31.4.13 SD I/O mode 1049

31.4.14 Commands and responses 1050

31.5 Response formats 1054

31.5.1 R1 (normal response command) 1054

31.5.2 R1b 1054

31.5.3 R2 (CID, CSD register) 1054

31.5.4 R3 (OCR register) 1055

31.5.5 R4 (Fast I/O) 1055

31.5.6 R4b 1056

31.5.7 R5 (interrupt request) 1056

31.5.8 R6 1057

31.6 SDIO I/O card-specific operations 1057

31.6.1 SDIO I/O read wait operation by SDIO_D2 signaling 1058

31.6.2 SDIO read wait operation by stopping SDIO_CK 1058

31.6.3 SDIO suspend/resume operation 1058

31.6.4 SDIO interrupts 1058

31.7 CE-ATA specific operations 1059
31.7.1 Command completion signal disable 1059
31.7.2 Command completion signal enable 1059
31.7.3 CE-ATA interrupt 1059
31.7.4 Aborting CMD61 1059
31.8 HW flow control 1060
31.9 SDIO registers 1060
31.9.1 SDIO power control register (SDIO_POWER) 1060
31.9.2 SDI clock control register (SDIO_CLKCR) 1061
31.9.3 SDIO argument register (SDIO_ARG) 1062
31.9.4 SDIO command register (SDIO_CMD) 1062
31.9.5 SDIO command response register (SDIO_RESPCMD) 1063
31.9.6 SDIO response 1..4 register (SDIO_RESPx) 1064
31.9.7 SDIO data timer register (SDIO_DTIMER) 1064
31.9.8 SDIO data length register (SDIO_DLEN) 1065
31.9.9 SDIO data control register (SDIO_DCTRL) 1066
31.9.10 SDIO data counter register (SDIO_DCOUNT) 1067
31.9.11 SDIO status register (SDIO_STA) 1068
31.9.12 SDIO interrupt clear register (SDIO_ICR) 1069
31.9.13 SDIO mask register (SDIO_MASK) 1071
31.9.14 SDIO FIFO counter register (SDIO_FIFOCNT) 1073
31.9.15 SDIO data FIFO register (SDIO_FIFO) 1074
31.9.16 SDIO register map 1074

32 Controller area network (bxCAN) 1076
32.1 bxCAN introduction 1076
32.2 bxCAN main features 1076
32.3 bxCAN general description 1077
32.3.1 CAN 2.0B active core 1077
32.3.2 Control, status and configuration registers 1078
32.3.3 Tx mailboxes 1078
32.3.4 Acceptance filters 1078
32.4 bxCAN operating modes 1079
32.4.1 Initialization mode 1080
32.4.2 Normal mode 1080
32.4.3 Sleep mode (low power) 1080

32.5 Test mode 1081
32.5.1 Silent mode 1081
32.5.2 Loop back mode 1082
32.5.3 Loop back combined with silent mode 1082
32.6 Debug mode 1083
32.7 bxCAN functional description 1083
32.7.1 Transmission handling 1083
32.7.2 Time triggered communication mode 1085
32.7.3 Reception handling 1085
32.7.4 Identifier filtering 1087
32.7.5 Message storage 1091
32.7.6 Error management 1093
32.7.7 Bit timing 1093
32.8 bxCAN interrupts 1095
32.9 CAN registers 1097
32.9.1 Register access protection 1097
32.9.2 CAN control and status registers 1097
32.9.3 CAN mailbox registers 1107
32.9.4 CAN filter registers 1114
32.9.5 bxCAN register map 1118

33 Ethernet (ETH): media access control (MAC) with DMA controller 1122
33.1 Ethernet introduction 1122
33.2 Ethernet main features 1122
33.2.1 MAC core features 1123
33.2.2 DMA features 1124
33.2.3 PTP features 1124
33.3 Ethernet pins 1125
33.4 Ethernet functional description: SMI, MII and RMII 1126
33.4.1 Station management interface: SMI 1126
33.4.2 Media-independent interface: MII 1129
33.4.3 Reduced media-independent interface: RMII 1131
33.4.4 MII/RMII selection 1132
33.5 Ethernet functional description: MAC 802.3 1133
33.5.1 MAC 802.3 frame format 1134

33.5.2 MAC frame transmission 1137
33.5.3 MAC frame reception 1144
33.5.4 MAC interrupts 1149
33.5.5 MAC filtering 1150
33.5.6 MAC loopback mode 1153
33.5.7 MAC management counters: MMC 1153
33.5.8 Power management: PMT 1154
33.5.9 Precision time protocol (IEEE1588 PTP) 1157
33.6 Ethernet functional description: DMA controller operation 1163
33.6.1 Initialization of a transfer using DMA 1164
33.6.2 Host bus burst access 1164
33.6.3 Host data buffer alignment 1165
33.6.4 Buffer size calculations 1165
33.6.5 DMA arbiter 1166
33.6.6 Error response to DMA 1166
33.6.7 Tx DMA configuration 1166
33.6.8 Rx DMA configuration 1178
33.6.9 DMA interrupts 1189
33.7 Ethernet interrupts 1190
33.8 Ethernet register descriptions 1191
33.8.1 MAC register description 1191
33.8.2 MMC register description 1210
33.8.3 IEEE 1588 time stamp registers 1215
33.8.4 DMA register description 1223
33.8.5 Ethernet register maps 1236

34 USB on-the-go full-speed (OTG_FS) 1240
34.1 OTG_FS introduction 1240
34.2 OTG_FS main features 1241
34.2.1 General features 1241
34.2.2 Host-mode features 1242
34.2.3 Peripheral-mode features 1242
34.3 OTG_FS functional description 1243
34.3.1 OTG pins 1243
34.3.2 OTG full-speed core 1243
34.3.3 Full-speed OTG PHY 1244

34.4 OTG dual role device (DRD) 1245
34.4.1 ID line detection 1245
34.4.2 HNP dual role device 1245
34.4.3 SRP dual role device 1246
34.5 USB peripheral 1246
34.5.1 SRP-capable peripheral 1247
34.5.2 Peripheral states 1247
34.5.3 Peripheral endpoints 1248
34.6 USB host 1250
34.6.1 SRP-capable host 1251
34.6.2 USB host states 1251
34.6.3 Host channels 1253
34.6.4 Host scheduler 1254
34.7 SOF trigger 1255
34.7.1 Host SOFs 1255
34.7.2 Peripheral SOFs 1256
34.8 OTG low-power modes 1256
34.9 Dynamic update of the OTG_FS_HFIR register 1257
34.10 USB data FIFOs 1258
34.11 Peripheral FIFO architecture 1259
34.11.1 Peripheral Rx FIFO 1259
34.11.2 Peripheral Tx FIFOs 1260
34.12 Host FIFO architecture 1260
34.12.1 Host Rx FIFO 1260
34.12.2 Host Tx FIFOs 1261
34.13 FIFO RAM allocation 1261
34.13.1 Device mode 1261
34.13.2 Host mode 1262
34.14 USB system performance 1262
34.15 OTG_FS interrupts 1263
34.16 OTG_FS control and status registers 1265
34.16.1 CSR memory map 1266
34.16.2 OTG_FS global registers 1271
34.16.3 Host-mode registers 1292
34.16.4 Device-mode registers 1302

34.16.5 OTG_FS power and clock gating control register (OTG_FS_PCGCCTL) . . . 1325
34.16.6 OTG_FS register map . . . 1326
34.17 OTG_FS programming model . . . 1335
34.17.1 Core initialization . . . 1335
34.17.2 Host initialization . . . 1336
34.17.3 Device initialization . . . 1336
34.17.4 Host programming model . . . 1337
34.17.5 Device programming model . . . 1353
34.17.6 Operational model . . . 1355
34.17.7 Worst case response time . . . 1372
34.17.8 OTG programming model . . . 1374

35 USB on-the-go high-speed (OTG_HS) . . . 1381
35.1 OTG_HS introduction . . . 1381
35.2 OTG_HS main features . . . 1381
35.2.1 General features . . . 1382
35.2.2 Host-mode features . . . 1383
35.2.3 Peripheral-mode features . . . 1383
35.3 OTG_HS functional description . . . 1383
35.3.1 OTG pins . . . 1384
35.3.2 High-speed OTG PHY . . . 1384
35.3.3 Embedded Full-speed OTG PHY . . . 1385
35.4 OTG dual-role device . . . 1385
35.4.1 ID line detection . . . 1385
35.4.2 HNP dual role device . . . 1385
35.4.3 SRP dual-role device . . . 1386
35.5 USB functional description in peripheral mode . . . 1386
35.5.1 SRP-capable peripheral . . . 1386
35.5.2 Peripheral states . . . 1387
35.5.3 Peripheral endpoints . . . 1388
35.6 USB functional description on host mode . . . 1391
35.6.1 SRP-capable host . . . 1391
35.6.2 USB host states . . . 1392
35.6.3 Host channels . . . 1393
35.6.4 Host scheduler . . . 1395

35.7 SOF trigger 1396
35.7.1 Host SOFs 1396
35.7.2 Peripheral SOFs 1396
35.8 OTG_HS low-power modes 1397
35.9 Dynamic update of the OTG_HS_HFIR register 1398
35.10 FIFO RAM allocation 1399
35.10.1 Peripheral mode 1399
35.10.2 Host mode 1399
35.11 OTG_HS interrupts 1400
35.12 OTG_HS control and status registers 1402
35.12.1 CSR memory map 1402
35.12.2 OTG_HS global registers 1407
35.12.3 Host-mode registers 1430
35.12.4 Device-mode registers 1443
35.12.5 OTG_HS power and clock gating control register (OTG_HS_PCGCCTL) 1472
35.12.6 OTG_HS register map 1472
35.13 OTG_HS programming model 1487
35.13.1 Core initialization 1487
35.13.2 Host initialization 1488
35.13.3 Device initialization 1489
35.13.4 DMA mode 1489
35.13.5 Host programming model 1489
35.13.6 Device programming model 1515
35.13.7 Operational model 1517
35.13.8 Worst case response time 1536
35.13.9 OTG programming model 1538

36 Flexible static memory controller (FSMC) 1544
36.1 FSMC main features 1544
36.2 Block diagram 1545
36.3 AHB interface 1545
36.3.1 Supported memories and transactions 1546
36.4 External device address mapping 1547
36.4.1 NOR/PSRAM address mapping 1547
36.4.2 NAND/PC Card address mapping 1548

36.5 NOR Flash/PSRAM controller 1549
36.5.1 External memory interface signals 1550
36.5.2 Supported memories and transactions 1552
36.5.3 General timing rules 1553
36.5.4 NOR Flash/PSRAM controller asynchronous transactions 1554
36.5.5 Synchronous transactions 1571
36.5.6 NOR/PSRAM control registers 1577
36.6 NAND Flash/PC Card controller 1584
36.6.1 External memory interface signals 1585
36.6.2 NAND Flash / PC Card supported memories and transactions 1587
36.6.3 Timing diagrams for NAND and PC Card 1587
36.6.4 NAND Flash operations 1588
36.6.5 NAND Flash prewait functionality 1589
36.6.6 Computation of the error correction code (ECC) in NAND Flash memory 1590
36.6.7 PC Card/CompactFlash operations 1591
36.6.8 NAND Flash/PC Card control registers 1593
36.6.9 FSMC register map 1600

37 Flexible memory controller (FMC) 1602
37.1 FMC main features 1602
37.2 Block diagram 1603
37.3 AHB interface 1604
37.3.1 Supported memories and transactions 1605
37.4 External device address mapping 1606
37.4.1 NOR/PSRAM address mapping 1607
37.4.2 NAND Flash memory/PC Card address mapping 1608
37.4.3 SDRAM address mapping 1609
37.5 NOR Flash/PSRAM controller 1612
37.5.1 External memory interface signals 1613
37.5.2 Supported memories and transactions 1615
37.5.3 General timing rules 1617
37.5.4 NOR Flash/PSRAM controller asynchronous transactions 1617
37.5.5 Synchronous transactions 1634
37.5.6 NOR/PSRAM controller registers 1640
37.6 NAND Flash/PC Card controller 1647
37.6.1 External memory interface signals 1648

37.6.2 NAND Flash / PC Card supported memories and transactions 1650
37.6.3 Timing diagrams for NAND Flash memory and PC Card 1650
37.6.4 NAND Flash operations 1651
37.6.5 NAND Flash prewait functionality 1652
37.6.6 Computation of the error correction code (ECC) in NAND Flash memory 1653
37.6.7 PC Card/CompactFlash operations 1654
37.6.8 NAND Flash/PC Card controller registers 1656
37.7 SDRAM controller 1663
37.7.1 SDRAM controller main features 1663
37.7.2 SDRAM External memory interface signals 1663
37.7.3 SDRAM controller functional description 1664
37.7.4 Low power modes 1671
37.7.5 SDRAM controller registers 1674
37.8 FMC register map 1680

38 Debug support (DBG) 1683
38.1 Overview 1683
38.2 Reference Arm® documentation 1684
38.3 SWJ debug port (serial wire and JTAG) 1684
38.3.1 Mechanism to select the JTAG-DP or the SW-DP 1685
38.4 Pinout and debug port pins 1685
38.4.1 SWJ debug port pins 1686
38.4.2 Flexible SWJ-DP pin assignment 1686
38.4.3 Internal pull-up and pull-down on JTAG pins 1687
38.4.4 Using serial wire and releasing the unused debug pins as GPIOs . . 1688
38.5 STM32F4xx JTAG TAP connection 1688
38.6 ID codes and locking mechanism 1690
38.6.1 MCU device ID code 1690
38.6.2 Boundary scan TAP 1691
38.6.3 Cortex®-M4 with FPU TAP 1691
38.6.4 Cortex®-M4 with FPU JEDEC-106 ID code 1691
38.7 JTAG debug port 1691
38.8 SW debug port 1693
38.8.1 SW protocol introduction 1693
38.8.2 SW protocol sequence 1693

38.8.3 SW-DP state machine (reset, idle states, ID code) 1694
38.8.4 DP and AP read/write accesses 1694
38.8.5 SW-DP registers 1695
38.8.6 SW-AP registers 1696
38.9 AHB-AP (AHB access port) - valid for both JTAG-DP and SW-DP 1696
38.10 Core debug 1697
38.11 Capability of the debugger host to connect under system reset 1698
38.12 FPB (Flash patch breakpoint) 1698
38.13 DWT (data watchpoint trigger) 1699
38.14 ITM (instrumentation trace macrocell) 1699
38.14.1 General description 1699
38.14.2 Time stamp packets, synchronization and overflow packets 1699
38.15 ETM (Embedded trace macrocell) 1701
38.15.1 ETM general description 1701
38.15.2 ETM signal protocol and packet types 1701
38.15.3 Main ETM registers 1702
38.15.4 ETM configuration example 1702
38.16 MCU debug component (DBGMCU) 1702
38.16.1 Debug support for low-power modes 1702
38.16.2 Debug support for timers, watchdog, bxCAN and I^2C 1703
38.16.3 Debug MCU configuration register 1703
38.16.4 Debug MCU APB1 freeze register (DBGMCU_APB1_FZ) 1705
38.16.5 Debug MCU APB2 Freeze register (DBGMCU_APB2_FZ) 1706
38.17 TPIU (trace port interface unit) 1707
38.17.1 Introduction 1707
38.17.2 TRACE pin assignment 1708
38.17.3 TPUI formatter 1709
38.17.4 TPUI frame synchronization packets 1710
38.17.5 Transmission of the synchronization frame packet 1710
38.17.6 Synchronous mode 1710
38.17.7 Asynchronous mode 1711
38.17.8 TRACECLKIN connection inside the STM32F4xx 1711
38.17.9 TPIU registers 1711
38.17.10 Example of configuration 1712
38.18 DBG register map 1713

39 Device electronic signature 1714

39.1 Unique device ID register (96 bits) 1714

39.2 Flash size 1715

40 Revision history 1716

List of tables

Table 1. STM32F4xx register boundary addresses 64
Table 2. Boot modes. 69
Table 3. Memory mapping vs. Boot mode/physical remap in STM32F405xx/07xx and STM32F415xx/17xx 71
Table 4. Memory mapping vs. Boot mode/physical remap in STM32F42xxx and STM32F43xxx 71
Table 5. Flash module organization (STM32F40x and STM32F41x) 75
Table 6. Flash module - 2 Mbyte dual bank organization (STM32F42xxx and STM32F43xxx) 77
Table 7. 1 Mbyte Flash memory single bank vs dual bank organization (STM32F42xxx and STM32F43xxx) 78
Table 8. 1 Mbyte single bank Flash memory organization (STM32F42xxx and STM32F43xxx) 78
Table 9. 1 Mbyte dual bank Flash memory organization (STM32F42xxx and STM32F43xxx) 79
Table 10. Number of wait states according to CPU clock (HCLK) frequency (STM32F405xx/07xx and STM32F415xx/17xx) 80
Table 11. Number of wait states according to CPU clock (HCLK) frequency (STM32F42xxx and STM32F43xxx) 81
Table 12. Program/erase parallelism 85
Table 13. Flash interrupt request 88
Table 14. Option byte organization. 88
Table 15. Description of the option bytes (STM32F405xx/07xx and STM32F415xx/17xx) 89
Table 16. Description of the option bytes (STM32F42xxx and STM32F43xxx) 90
Table 17. Access versus read protection level 94
Table 18. OTP area organization 97
Table 19. Flash register map and reset values (STM32F405xx/07xx and STM32F415xx/17xx) 111
Table 20. Flash register map and reset values (STM32F42xxx and STM32F43xxx). 111
Table 21. CRC calculation unit register map and reset values. 115
Table 22. Voltage regulator configuration mode versus device operating mode 122
Table 23. Low-power mode summary 128
Table 24. Sleep-now entry and exit 129
Table 25. Sleep-on-exit entry and exit 130
Table 26. Stop operating modes (STM32F405xx/07xx and STM32F415xx/17xx) 131
Table 27. Stop mode entry and exit (for STM32F405xx/07xx and STM32F415xx/17xx) 132
Table 28. Stop operating modes (STM32F42xxx and STM32F43xxx). 134
Table 29. Stop mode entry and exit (STM32F42xxx and STM32F43xxx) 136
Table 30. Standby mode entry and exit 137
Table 31. PWR - register map and reset values for STM32F405xx/07xx and STM32F415xx/17xx. 149
Table 32. PWR - register map and reset values for STM32F42xxx and STM32F43xxx 149
Table 33. RCC register map and reset values for STM32F42xxx and STM32F43xxx. 210
Table 34. RCC register map and reset values 265
Table 35. Port bit configuration table 268
Table 36. Flexible SWJ-DP pin assignment 271
Table 37. RTC_AF1 pin 279
Table 38. RTC_AF2 pin 280
Table 39. GPIO register map and reset values 287

Table 40. SYSCFG register map and reset values (STM32F405xx/07xx and STM32F415xx/17xx) 294
Table 41. SYSCFG register map and reset values (STM32F42xxx and STM32F43xxx) 301
Table 42. DMA1 request mapping 307
Table 43. DMA2 request mapping 308
Table 44. Source and destination address 309
Table 45. Source and destination address registers in Double buffer mode (DBM=1). 314
Table 46. Packing/unpacking & endian behavior (bit PINC = MINC = 1) 315
Table 47. Restriction on NDT versus PSIZE and MSIZE 316
Table 48. FIFO threshold configurations 318
Table 49. Possible DMA configurations 322
Table 50. DMA interrupt requests 324
Table 51. DMA register map and reset values 335
Table 52. Supported color mode in input 342
Table 53. Data order in memory 343
Table 54. Alpha mode configuration 344
Table 55. Supported CLUT color mode 345
Table 56. CLUT data order in memory 345
Table 57. Supported color mode in output 346
Table 58. Data order in memory 346
Table 59. DMA2D interrupt requests 351
Table 60. DMA2D register map and reset values 369
Table 61. Vector table for STM32F405xx/07xx and STM32F415xx/17xx. 372
Table 62. Vector table for STM32F42xxx and STM32F43xxx 375
Table 63. External interrupt/event controller register map and reset values. 387
Table 64. External interrupt/event controller register map and reset values. 387
Table 65. ADC pins. 390
Table 66. Analog watchdog channel selection 393
Table 67. Configuring the trigger polarity 397
Table 68. External trigger for regular channels. 398
Table 69. External trigger for injected channels 399
Table 70. ADC interrupts 414
Table 71. ADC global register map. 430
Table 72. ADC register map and reset values for each ADC 431
Table 73. ADC register map and reset values (common ADC registers) 432
Table 74. DAC pins. 434
Table 75. External triggers 437
Table 76. DAC register map 453
Table 77. DCMI pins 455
Table 78. DCMI signals 457
Table 79. Positioning of captured data bytes in 32-bit words (8-bit width) 458
Table 80. Positioning of captured data bytes in 32-bit words (10-bit width) 458
Table 81. Positioning of captured data bytes in 32-bit words (12-bit width) 459
Table 82. Positioning of captured data bytes in 32-bit words (14-bit width) 459
Table 83. Data storage in monochrome progressive video format 466
Table 84. Data storage in RGB progressive video format 466
Table 85. Data storage in YCbCr progressive video format 467
Table 86. DCMI interrupts. 467
Table 87. DCMI register map and reset values 478
Table 88. LTDC registers versus clock domain 482
Table 89. LCD-TFT pins and signal interface 483
Table 90. Pixel Data mapping versus Color Format 487
Table 91. LTDC interrupt requests 491

Table 92. LTDC register map and reset values . . . 512
Table 93. Counting direction versus encoder signals . . . 553
Table 94. TIMx Internal trigger connection . . . 567
Table 95. Output control bits for complementary OCx and OCxN channels with break feature . . . 579
Table 96. TIM1 and TIM8 register map and reset values . . . 587
Table 97. Counting direction versus encoder signals . . . 616
Table 98. TIMx internal trigger connection . . . 632
Table 99. Output control bit for standard OCx channels . . . 641
Table 100. TIM2 to TIM5 register map and reset values . . . 648
Table 101. TIMx internal trigger connection . . . 674
Table 102. Output control bit for standard OCx channels . . . 682
Table 103. TIM9/12 register map and reset values . . . 684
Table 104. Output control bit for standard OCx channels . . . 691
Table 105. TIM10/11/13/14 register map and reset values . . . 694
Table 106. TIM6 and TIM7 register map and reset values . . . 707
Table 107. Min/max IWDG timeout period (in ms) at 32 kHz (LSI) . . . 709
Table 108. IWDG register map and reset values . . . 712
Table 109. Minimum and maximum timeout values at 30 MHz (f_{PCLK1}) . . . 716
Table 110. WWDG register map and reset values . . . 719
Table 111. Number of cycles required to process each 128-bit block (STM32F415/417xx) . . . 720
Table 112. Number of cycles required to process each 128-bit block (STM32F43xxx) . . . 720
Table 113. Data types . . . 740
Table 114. CRYP register map and reset values for STM32F415/417xx . . . 763
Table 115. CRYP register map and reset values for STM32F43xxx . . . 764
Table 116. RNG register map and reset map . . . 771
Table 117. HASH register map and reset values on STM32F415/417xx . . . 795
Table 118. HASH register map and reset values on STM32F43xxx . . . 796
Table 119. Effect of low-power modes on RTC . . . 814
Table 120. Interrupt control bits . . . 815
Table 121. RTC register map and reset values . . . 836
Table 122. Maximum DNF[3:0] value to be compliant with Thd:dat(max) . . . 852
Table 123. SMBus vs. I2C . . . 854
Table 124. I2C Interrupt requests . . . 858
Table 125. I2C register map and reset values . . . 872
Table 126. SPI interrupt requests . . . 898
Table 127. Audio frequency precision (for PLLM VCO = 1 MHz or 2 MHz) . . . 909
Table 128. I^2S interrupt requests . . . 915
Table 129. SPI register map and reset values . . . 925
Table 130. Example of possible audio frequency sampling range . . . 936
Table 131. Interrupt sources . . . 948
Table 132. SAI register map and reset values . . . 963
Table 133. Noise detection from sampled data . . . 977
Table 134. Error calculation for programmed baud rates at f_{PCLK} = 8 MHz or f_{PCLK} = 12 MHz, oversampling by 16 . . . 980
Table 135. Error calculation for programmed baud rates at f_{PCLK} = 8 MHz or f_{PCLK} =12 MHz, oversampling by 8 . . . 981
Table 136. Error calculation for programmed baud rates at f_{PCLK} = 16 MHz or f_{PCLK} = 24 MHz, oversampling by 16 . . . 981
Table 137. Error calculation for programmed baud rates at f_{PCLK} = 16 MHz or f_{PCLK} = 24 MHz,

oversampling by 8. 982
Table 138. Error calculation for programmed baud rates at fPCLK = 8 MHz or fPCLK = 16 MHz, oversampling by 16. 983
Table 139. Error calculation for programmed baud rates at fPCLK = 8 MHz or fPCLK = 16 MHz, oversampling by 8. 983
Table 140. Error calculation for programmed baud rates at fPCLK = 30 MHz or fPCLK = 60 MHz, oversampling by 16. 984
Table 141. Error calculation for programmed baud rates at fPCLK = 30 MHz or fPCLK = 60 MHz, oversampling by 8 985
Table 142. Error calculation for programmed baud rates at fPCLK = 42 MHz or fPCLK = 84 Hz, oversampling by 16. 986
Table 143. Error calculation for programmed baud rates at fPCLK = 42 MHz or fPCLK = 84 MHz, oversampling by 8. 987
Table 144. USART receiver's tolerance when DIV fraction is 0 988
Table 145. USART receiver tolerance when DIV_Fraction is different from 0 989
Table 146. Frame formats 991
Table 147. USART interrupt requests. 1006
Table 148. USART mode configuration 1007
Table 149. USART register map and reset values 1018
Table 150. SDIO I/O definitions 1023
Table 151. Command format 1027
Table 152. Short response format 1028
Table 153. Long response format. 1028
Table 154. Command path status flags 1028
Table 155. Data token format 1031
Table 156. Transmit FIFO status flags 1032
Table 157. Receive FIFO status flags 1033
Table 158. Card status 1043
Table 159. SD status 1046
Table 160. Speed class code field 1047
Table 161. Performance move field 1047
Table 162. AU_SIZE field 1048
Table 163. Maximum AU size. 1048
Table 164. Erase size field 1048
Table 165. Erase timeout field 1049
Table 166. Erase offset field. 1049
Table 167. Block-oriented write commands 1051
Table 168. Block-oriented write protection commands. 1052
Table 169. Erase commands 1052
Table 170. I/O mode commands 1053
Table 171. Lock card 1053
Table 172. Application-specific commands 1053
Table 173. R1 response 1054
Table 174. R2 response 1055
Table 175. R3 response 1055
Table 176. R4 response 1055
Table 177. R4b response 1056
Table 178. R5 response 1056
Table 179. R6 response 1057
Table 180. Response type and SDIO_RESPx registers. 1064
Table 181. SDIO register map 1074
Table 182. Transmit mailbox mapping 1091

Table 183. Receive mailbox mapping . . . 1091
Table 184. bxCAN register map and reset values . . . 1118
Table 185. Alternate function mapping . . . 1125
Table 186. Management frame format . . . 1127
Table 187. Clock range . . . 1129
Table 188. TX interface signal encoding . . . 1130
Table 189. RX interface signal encoding . . . 1131
Table 190. Frame statuses . . . 1146
Table 191. Destination address filtering . . . 1152
Table 192. Source address filtering . . . 1153
Table 193. Receive descriptor 0 - encoding for bits 7, 5 and 0 (normal descriptor format only, EDFE=0) . . . 1184
Table 194. Time stamp snapshot dependency on registers bits . . . 1217
Table 195. Ethernet register map and reset values . . . 1236
Table 196. OTG_FS input/output pins . . . 1243
Table 197. Compatibility of STM32 low power modes with the OTG . . . 1256
Table 198. Core global control and status registers (CSRs) . . . 1266
Table 199. Host-mode control and status registers (CSRs) . . . 1267
Table 200. Device-mode control and status registers . . . 1268
Table 201. Data FIFO (DFIFO) access register map . . . 1269
Table 202. Power and clock gating control and status registers . . . 1270
Table 203. TRDT values . . . 1276
Table 204. Minimum duration for soft disconnect . . . 1304
Table 205. OTG_FS register map and reset values . . . 1326
Table 206. OTG_HS input/output pins . . . 1384
Table 207. Compatibility of STM32 low power modes with the OTG . . . 1397
Table 208. Core global control and status registers (CSRs) . . . 1403
Table 209. Host-mode control and status registers (CSRs) . . . 1404
Table 210. Device-mode control and status registers . . . 1405
Table 211. Data FIFO (DFIFO) access register map . . . 1407
Table 212. Power and clock gating control and status registers . . . 1407
Table 213. TRDT values . . . 1414
Table 214. Minimum duration for soft disconnect . . . 1446
Table 215. OTG_HS register map and reset values . . . 1472
Table 216. NOR/PSRAM bank selection . . . 1548
Table 217. External memory address . . . 1548
Table 218. Memory mapping and timing registers . . . 1548
Table 219. NAND bank selections . . . 1549
Table 220. Programmable NOR/PSRAM access parameters . . . 1550
Table 221. Nonmultiplexed I/O NOR Flash . . . 1550
Table 222. Multiplexed I/O NOR Flash . . . 1551
Table 223. Nonmultiplexed I/Os PSRAM/SRAM . . . 1551
Table 224. Multiplexed I/O PSRAM . . . 1552
Table 225. NOR Flash/PSRAM controller: example of supported memories and transactions . . . 1552
Table 226. FSMC_BCRx bit fields . . . 1555
Table 227. FSMC_BTRx bit fields . . . 1556
Table 228. FSMC_BCRx bit fields . . . 1557
Table 229. FSMC_BTRx bit fields . . . 1558
Table 230. FSMC_BWTRx bit fields . . . 1558
Table 231. FSMC_BCRx bit fields . . . 1560
Table 232. FSMC_BTRx bit fields . . . 1561
Table 233. FSMC_BWTRx bit fields . . . 1561

Table 234. FSMC_BCRx bit fields . . . 1563
Table 235. FSMC_BTRx bit fields . . . 1563
Table 236. FSMC_BWTRx bit fields . . . 1564
Table 237. FSMC_BCRx bit fields . . . 1565
Table 238. FSMC_BTRx bit fields . . . 1566
Table 239. FSMC_BWTRx bit fields . . . 1566
Table 240. FSMC_BCRx bit fields . . . 1568
Table 241. FSMC_BTRx bit fields . . . 1568
Table 242. FSMC_BCRx bit fields . . . 1573
Table 243. FSMC_BTRx bit fields . . . 1574
Table 244. FSMC_BCRx bit fields . . . 1575
Table 245. FSMC_BTRx bit fields . . . 1576
Table 246. Programmable NAND/PC Card access parameters . . . 1585
Table 247. 8-bit NAND Flash . . . 1585
Table 248. 16-bit NAND Flash . . . 1586
Table 249. 16-bit PC Card . . . 1586
Table 250. Supported memories and transactions . . . 1587
Table 251. 16-bit PC-Card signals and access type . . . 1592
Table 252. ECC result relevant bits . . . 1599
Table 253. FSMC register map . . . 1600
Table 254. NOR/PSRAM bank selection . . . 1607
Table 255. NOR/PSRAM External memory address . . . 1608
Table 256. NAND/PC Card memory mapping and timing registers . . . 1608
Table 257. NAND bank selection . . . 1609
Table 258. SDRAM bank selection . . . 1609
Table 259. SDRAM address mapping . . . 1609
Table 260. SDRAM address mapping with 8-bit data bus width . . . 1610
Table 261. SDRAM address mapping with 16-bit data bus width . . . 1611
Table 262. SDRAM address mapping with 32-bit data bus width . . . 1611
Table 263. Programmable NOR/PSRAM access parameters . . . 1613
Table 264. Non-multiplexed I/O NOR Flash memory . . . 1614
Table 265. 16-bit multiplexed I/O NOR Flash memory . . . 1614
Table 266. Non-multiplexed I/Os PSRAM/SRAM . . . 1614
Table 267. 16-Bit multiplexed I/O PSRAM . . . 1615
Table 268. NOR Flash/PSRAM: Example of supported memories and transactions . . . 1616
Table 269. FMC_BCRx bit fields . . . 1619
Table 270. FMC_BTRx bit fields . . . 1619
Table 271. FMC_BCRx bit fields . . . 1621
Table 272. FMC_BTRx bit fields . . . 1622
Table 273. FMC_BWTRx bit fields . . . 1622
Table 274. FMC_BCRx bit fields . . . 1624
Table 275. FMC_BTRx bit fields . . . 1625
Table 276. FMC_BWTRx bit fields . . . 1625
Table 277. FMC_BCRx bit fields . . . 1627
Table 278. FMC_BTRx bit fields . . . 1627
Table 279. FMC_BWTRx bit fields . . . 1628
Table 280. FMC_BCRx bit fields . . . 1629
Table 281. FMC_BTRx bit fields . . . 1630
Table 282. FMC_BWTRx bit fields . . . 1630
Table 283. FMC_BCRx bit fields . . . 1632
Table 284. FMC_BTRx bit fields . . . 1632
Table 285. FMC_BCRx bit fields . . . 1637

Table 286. FMC_BTRx bit fields . . . 1637
Table 287. FMC_BCRx bit fields . . . 1638
Table 288. FMC_BTRx bit fields . . . 1639
Table 289. Programmable NAND Flash/PC Card access parameters . . . 1648
Table 290. 8-bit NAND Flash . . . 1648
Table 291. 16-bit NAND Flash . . . 1649
Table 292. 16-bit PC Card . . . 1649
Table 293. Supported memories and transactions . . . 1650
Table 294. 16-bit PC-Card signals and access type . . . 1655
Table 295. ECC result relevant bits . . . 1662
Table 296. SDRAM signals . . . 1663
Table 297. FMC register map . . . 1680
Table 298. SWJ debug port pins . . . 1686
Table 299. Flexible SWJ-DP pin assignment . . . 1686
Table 300. JTAG debug port data registers . . . 1691
Table 301. 32-bit debug port registers addressed through the shifted value A[3:2] . . . 1692
Table 302. Packet request (8-bits) . . . 1693
Table 303. ACK response (3 bits) . . . 1694
Table 304. DATA transfer (33 bits) . . . 1694
Table 305. SW-DP registers . . . 1695
Table 306. Cortex®-M4 with FPU AHB-AP registers . . . 1696
Table 307. Core debug registers . . . 1697
Table 308. Main ITM registers . . . 1700
Table 309. Main ETM registers . . . 1702
Table 310. Asynchronous TRACE pin assignment . . . 1708
Table 311. Synchronous TRACE pin assignment . . . 1708
Table 312. Flexible TRACE pin assignment . . . 1709
Table 313. Important TPIU registers . . . 1711
Table 314. DBG register map and reset values . . . 1713
Table 315. Document revision history . . . 1716

List of figures

Figure 1. System architecture for STM32F405xx/07xx and STM32F415xx/17xx devices 60
Figure 2. System architecture for STM32F42xxx and STM32F43xxx devices 62
Figure 3. Flash memory interface connection inside system architecture (STM32F405xx/07xx and STM32F415xx/17xx) 73
Figure 4. Flash memory interface connection inside system architecture (STM32F42xxx and STM32F43xxx) 74
Figure 5. Sequential 32-bit instruction execution 83
Figure 6. RDP levels 94
Figure 7. PCROP levels 96
Figure 8. CRC calculation unit block diagram 113
Figure 9. Power supply overview for STM32F405xx/07xx and STM32F415xx/17xx 116
Figure 10. Power supply overview for STM32F42xxx and STM32F43xxx. 117
Figure 11. Backup domain 120
Figure 12. Power-on reset/power-down reset waveform 124
Figure 13. BOR thresholds 125
Figure 14. PVD thresholds 126
Figure 15. Simplified diagram of the reset circuit 151
Figure 16. Clock tree 152
Figure 17. HSE/ LSE clock sources 154
Figure 18. Frequency measurement with TIM5 in Input capture mode 159
Figure 19. Frequency measurement with TIM11 in Input capture mode 160
Figure 20. Simplified diagram of the reset circuit 214
Figure 21. Clock tree 216
Figure 22. HSE/ LSE clock sources 218
Figure 23. Frequency measurement with TIM5 in Input capture mode 223
Figure 24. Frequency measurement with TIM11 in Input capture mode 223
Figure 25. Basic structure of a five-volt tolerant I/O port bit 268
Figure 26. Selecting an alternate function on STM32F405xx/07xx and STM32F415xx/17xx 272
Figure 27. Selecting an alternate function on STM32F42xxx and STM32F43xxx 273
Figure 28. Input floating/pull up/pull down configurations 276
Figure 29. Output configuration 277
Figure 30. Alternate function configuration 277
Figure 31. High impedance-analog configuration 278
Figure 32. DMA block diagram 304
Figure 33. System implementation of the two DMA controllers (STM32F405xx/07xx and STM32F415xx/17xx) 305
Figure 34. System implementation of the two DMA controllers (STM32F42xxx and STM32F43xxx) 306
Figure 35. Channel selection 307
Figure 36. Peripheral-to-memory mode 310
Figure 37. Memory-to-peripheral mode 311
Figure 38. Memory-to-memory mode 312
Figure 39. FIFO structure 317
Figure 40. DMA2D block diagram 341
Figure 41. External interrupt/event controller block diagram 380
Figure 42. External interrupt/event GPIO mapping (STM32F405xx/07xx and STM32F415xx/17xx). 382
Figure 43. External interrupt/event GPIO mapping (STM32F42xxx and STM32F43xxx) 383
Figure 44. Single ADC block diagram 389
Figure 45. Timing diagram 392

Figure 46. Analog watchdog's guarded area . . . 393
Figure 47. Injected conversion latency . . . 394
Figure 48. Right alignment of 12-bit data . . . 396
Figure 49. Left alignment of 12-bit data . . . 396
Figure 50. Left alignment of 6-bit data . . . 396
Figure 51. Multi ADC block diagram(1) . . . 402
Figure 52. Injected simultaneous mode on 4 channels: dual ADC mode . . . 405
Figure 53. Injected simultaneous mode on 4 channels: triple ADC mode . . . 405
Figure 54. Regular simultaneous mode on 16 channels: dual ADC mode . . . 406
Figure 55. Regular simultaneous mode on 16 channels: triple ADC mode . . . 406
Figure 56. Interleaved mode on 1 channel in continuous conversion mode: dual ADC mode. . . . 407
Figure 57. Interleaved mode on 1 channel in continuous conversion mode: triple ADC mode . . . 408
Figure 58. Alternate trigger: injected group of each ADC . . . 409
Figure 59. Alternate trigger: 4 injected channels (each ADC) in discontinuous mode . . . 410
Figure 60. Alternate trigger: injected group of each ADC . . . 410
Figure 61. Alternate + regular simultaneous . . . 411
Figure 62. Case of trigger occurring during injected conversion . . . 412
Figure 63. Temperature sensor and VREFINT channel block diagram . . . 413
Figure 64. DAC channel block diagram . . . 434
Figure 65. Data registers in single DAC channel mode . . . 436
Figure 66. Data registers in dual DAC channel mode . . . 436
Figure 67. Timing diagram for conversion with trigger disabled TEN = 0 . . . 437
Figure 68. DAC LFSR register calculation algorithm . . . 439
Figure 69. DAC conversion (SW trigger enabled) with LFSR wave generation. . . . 439
Figure 70. DAC triangle wave generation . . . 440
Figure 71. DAC conversion (SW trigger enabled) with triangle wave generation . . . 440
Figure 72. DCMI block diagram . . . 456
Figure 73. Top-level block diagram . . . 457
Figure 74. DCMI signal waveforms . . . 458
Figure 75. Timing diagram . . . 460
Figure 76. Frame capture waveforms in Snapshot mode . . . 462
Figure 77. Frame capture waveforms in continuous grab mode . . . 463
Figure 78. Coordinates and size of the window after cropping . . . 464
Figure 79. Data capture waveforms . . . 464
Figure 80. Pixel raster scan order . . . 465
Figure 81. LTDC block diagram . . . 481
Figure 82. LCD-TFT Synchronous timings . . . 484
Figure 83. Layer window programmable parameters: . . . 487
Figure 84. Blending two layers with background . . . 490
Figure 85. Interrupt events . . . 491
Figure 86. Advanced-control timer block diagram . . . 517
Figure 87. Counter timing diagram with prescaler division change from 1 to 2 . . . 519
Figure 88. Counter timing diagram with prescaler division change from 1 to 4 . . . 519
Figure 89. Counter timing diagram, internal clock divided by 1 . . . 520
Figure 90. Counter timing diagram, internal clock divided by 2 . . . 521
Figure 91. Counter timing diagram, internal clock divided by 4 . . . 521
Figure 92. Counter timing diagram, internal clock divided by N. . . . 521
Figure 93. Counter timing diagram, update event when ARPE=0 (TIMx_ARR not preloaded) . . . 522
Figure 94. Counter timing diagram, update event when ARPE=1 (TIMx_ARR preloaded) . . . 522
Figure 95. Counter timing diagram, internal clock divided by 1 . . . 524
Figure 96. Counter timing diagram, internal clock divided by 2 . . . 524
Figure 97. Counter timing diagram, internal clock divided by 4 . . . 525

Figure 98. Counter timing diagram, internal clock divided by N . . . 525
Figure 99. Counter timing diagram, update event when repetition counter is not used . . . 526
Figure 100. Counter timing diagram, internal clock divided by 1, TIMx_ARR = 0x6 . . . 527
Figure 101. Counter timing diagram, internal clock divided by 2 . . . 527
Figure 102. Counter timing diagram, internal clock divided by 4, TIMx_ARR=0x36 . . . 528
Figure 103. Counter timing diagram, internal clock divided by N . . . 528
Figure 104. Counter timing diagram, update event with ARPE=1 (counter underflow) . . . 529
Figure 105. Counter timing diagram, Update event with ARPE=1 (counter overflow) . . . 529
Figure 106. Update rate examples depending on mode and TIMx_RCR register settings . . . 531
Figure 107. Control circuit in normal mode, internal clock divided by 1 . . . 532
Figure 108. TI2 external clock connection example . . . 533
Figure 109. Control circuit in external clock mode 1 . . . 534
Figure 110. External trigger input block . . . 534
Figure 111. Control circuit in external clock mode 2 . . . 535
Figure 112. Capture/compare channel (example: channel 1 input stage) . . . 536
Figure 113. Capture/compare channel 1 main circuit . . . 536
Figure 114. Output stage of capture/compare channel (channel 1 to 3) . . . 537
Figure 115. Output stage of capture/compare channel (channel 4) . . . 537
Figure 116. PWM input mode timing . . . 539
Figure 117. Output compare mode, toggle on OC1 . . . 541
Figure 118. Edge-aligned PWM waveforms (ARR=8) . . . 542
Figure 119. Center-aligned PWM waveforms (ARR=8) . . . 543
Figure 120. Complementary output with dead-time insertion . . . 545
Figure 121. Dead-time waveforms with delay greater than the negative pulse . . . 545
Figure 122. Dead-time waveforms with delay greater than the positive pulse . . . 545
Figure 123. Output behavior in response to a break . . . 548
Figure 124. Clearing TIMx OCxREF . . . 549
Figure 125. 6-step generation, COM example (OSSR=1) . . . 550
Figure 126. Example of one pulse mode . . . 551
Figure 127. Example of counter operation in encoder interface mode . . . 554
Figure 128. Example of encoder interface mode with TI1FP1 polarity inverted . . . 554
Figure 129. Example of Hall sensor interface . . . 556
Figure 130. Control circuit in reset mode . . . 557
Figure 131. Control circuit in gated mode . . . 558
Figure 132. Control circuit in trigger mode . . . 559
Figure 133. Control circuit in external clock mode 2 + trigger mode . . . 560
Figure 134. General-purpose timer block diagram . . . 590
Figure 135. Counter timing diagram with prescaler division change from 1 to 2 . . . 592
Figure 136. Counter timing diagram with prescaler division change from 1 to 4 . . . 592
Figure 137. Counter timing diagram, internal clock divided by 1 . . . 593
Figure 138. Counter timing diagram, internal clock divided by 2 . . . 593
Figure 139. Counter timing diagram, internal clock divided by 4 . . . 594
Figure 140. Counter timing diagram, internal clock divided by N . . . 594
Figure 141. Counter timing diagram, Update event when ARPE=0 (TIMx_ARR not preloaded) . . . 595
Figure 142. Counter timing diagram, Update event when ARPE=1 (TIMx_ARR preloaded) . . . 595
Figure 143. Counter timing diagram, internal clock divided by 1 . . . 596
Figure 144. Counter timing diagram, internal clock divided by 2 . . . 597
Figure 145. Counter timing diagram, internal clock divided by 4 . . . 597
Figure 146. Counter timing diagram, internal clock divided by N . . . 597
Figure 147. Counter timing diagram, Update event . . . 598
Figure 148. Counter timing diagram, internal clock divided by 1, TIMx_ARR=0x6 . . . 599
Figure 149. Counter timing diagram, internal clock divided by 2 . . . 599

Figure 150. Counter timing diagram, internal clock divided by 4, TIMx_ARR=0x36 600
Figure 151. Counter timing diagram, internal clock divided by N. 600
Figure 152. Counter timing diagram, Update event with ARPE=1 (counter underflow). 601
Figure 153. Counter timing diagram, Update event with ARPE=1 (counter overflow). 601
Figure 154. Control circuit in normal mode, internal clock divided by 1 602
Figure 155. TI2 external clock connection example. 603
Figure 156. Control circuit in external clock mode 1 604
Figure 157. External trigger input block 604
Figure 158. Control circuit in external clock mode 2 605
Figure 159. Capture/compare channel (example: channel 1 input stage) 605
Figure 160. Capture/compare channel 1 main circuit 606
Figure 161. Output stage of capture/compare channel (channel 1). 606
Figure 162. PWM input mode timing 608
Figure 163. Output compare mode, toggle on OC1. 610
Figure 164. Edge-aligned PWM waveforms (ARR=8) 611
Figure 165. Center-aligned PWM waveforms (ARR=8). 612
Figure 166. Example of one-pulse mode 613
Figure 167. Clearing TIMx OCxREF 615
Figure 168. Example of counter operation in encoder interface mode 617
Figure 169. Example of encoder interface mode with TI1FP1 polarity inverted 617
Figure 170. Control circuit in reset mode 618
Figure 171. Control circuit in gated mode 619
Figure 172. Control circuit in trigger mode. 620
Figure 173. Control circuit in external clock mode 2 + trigger mode 621
Figure 174. Master/Slave timer example 621
Figure 175. Gating timer 2 with OC1REF of timer 1 622
Figure 176. Gating timer 2 with Enable of timer 1 623
Figure 177. Triggering timer 2 with update of timer 1 624
Figure 178. Triggering timer 2 with Enable of timer 1 625
Figure 179. Triggering timer 1 and 2 with timer 1 TI1 input 626
Figure 180. General-purpose timer block diagram (TIM9 and TIM12) 651
Figure 181. General-purpose timer block diagram (TIM10/11/13/14) 652
Figure 182. Counter timing diagram with prescaler division change from 1 to 2 654
Figure 183. Counter timing diagram with prescaler division change from 1 to 4 654
Figure 184. Counter timing diagram, internal clock divided by 1 655
Figure 185. Counter timing diagram, internal clock divided by 2 656
Figure 186. Counter timing diagram, internal clock divided by 4 656
Figure 187. Counter timing diagram, internal clock divided by N. 656
Figure 188. Counter timing diagram, update event when ARPE=0 (TIMx_ARR not preloaded) 657
Figure 189. Counter timing diagram, update event when ARPE=1 (TIMx_ARR preloaded) 657
Figure 190. Control circuit in normal mode, internal clock divided by 1 658
Figure 191. TI2 external clock connection example. 659
Figure 192. Control circuit in external clock mode 1 659
Figure 193. Capture/compare channel (example: channel 1 input stage) 660
Figure 194. Capture/compare channel 1 main circuit 661
Figure 195. Output stage of capture/compare channel (channel 1). 661
Figure 196. PWM input mode timing 663
Figure 197. Output compare mode, toggle on OC1. 665
Figure 198. Edge-aligned PWM waveforms (ARR=8) 666
Figure 199. Example of one pulse mode. 667
Figure 200. Control circuit in reset mode 669
Figure 201. Control circuit in gated mode 670

Figure 202. Control circuit in trigger mode . . . 670
Figure 203. Basic timer block diagram . . . 696
Figure 204. Counter timing diagram with prescaler division change from 1 to 2 . . . 698
Figure 205. Counter timing diagram with prescaler division change from 1 to 4 . . . 698
Figure 206. Counter timing diagram, internal clock divided by 1 . . . 699
Figure 207. Counter timing diagram, internal clock divided by 2 . . . 700
Figure 208. Counter timing diagram, internal clock divided by 4 . . . 700
Figure 209. Counter timing diagram, internal clock divided by N . . . 700
Figure 210. Counter timing diagram, update event when ARPE=0 (TIMx_ARR not preloaded) . . . 701
Figure 211. Counter timing diagram, update event when ARPE=1 (TIMx_ARR preloaded) . . . 701
Figure 212. Control circuit in normal mode, internal clock divided by 1 . . . 702
Figure 213. Independent watchdog block diagram . . . 709
Figure 214. Watchdog block diagram . . . 714
Figure 215. Window watchdog timing diagram . . . 715
Figure 216. Block diagram (STM32F415/417xx) . . . 722
Figure 217. Block diagram (STM32F43xxx) . . . 723
Figure 218. DES/TDES-ECB mode encryption . . . 725
Figure 219. DES/TDES-ECB mode decryption . . . 725
Figure 220. DES/TDES-CBC mode encryption . . . 727
Figure 221. DES/TDES-CBC mode decryption . . . 728
Figure 222. AES-ECB mode encryption . . . 729
Figure 223. AES-ECB mode decryption . . . 730
Figure 224. AES-CBC mode encryption . . . 731
Figure 225. AES-CBC mode decryption . . . 732
Figure 226. AES-CTR mode encryption . . . 733
Figure 227. AES-CTR mode decryption . . . 734
Figure 228. Initial counter block structure for the Counter mode . . . 734
Figure 229. 64-bit block construction according to DATATYPE . . . 741
Figure 230. Initialization vectors use in the TDES-CBC encryption . . . 743
Figure 231. CRYP interrupt mapping diagram . . . 748
Figure 232. Block diagram . . . 767
Figure 233. Block diagram for STM32F415/417xx . . . 773
Figure 234. Block diagram for STM32F43xxx . . . 774
Figure 235. Bit, byte and half-word swapping . . . 776
Figure 236. HASH interrupt mapping diagram . . . 782
Figure 237. RTC block diagram . . . 800
Figure 238. I2C bus protocol . . . 841
Figure 239. I2C block diagram for STM32F40x/41x . . . 842
Figure 240. I2C block diagram for STM32F42x/43x . . . 843
Figure 241. Transfer sequence diagram for slave transmitter . . . 845
Figure 242. Transfer sequence diagram for slave receiver . . . 846
Figure 243. Transfer sequence diagram for master transmitter . . . 849
Figure 244. Transfer sequence diagram for master receiver . . . 850
Figure 245. I2C interrupt mapping diagram . . . 859
Figure 246. SPI block diagram . . . 876
Figure 247. Single master/ single slave application . . . 877
Figure 248. Data clock timing diagram . . . 879
Figure 249. TI mode - Slave mode, single transfer . . . 881
Figure 250. TI mode - Slave mode, continuous transfer . . . 882
Figure 251. TI mode - master mode, single transfer . . . 883

Figure 252. TI mode - master mode, continuous transfer 884
Figure 253. TXE/RXNE/BSY behavior in Master / full-duplex mode (BIDIMODE=0 and RXONLY=0) in case of continuous transfers 887
Figure 254. TXE/RXNE/BSY behavior in Slave / full-duplex mode (BIDIMODE=0, RXONLY=0) in case of continuous transfers 888
Figure 255. TXE/BSY behavior in Master transmit-only mode (BIDIMODE=0 and RXONLY=0) in case of continuous transfers 889
Figure 256. TXE/BSY in Slave transmit-only mode (BIDIMODE=0 and RXONLY=0) in case of continuous transfers 889
Figure 257. RXNE behavior in receive-only mode (BIDIRMODE=0 and RXONLY=1) in case of continuous transfers 890
Figure 258. TXE/BSY behavior when transmitting (BIDIRMODE=0 and RXONLY=0) in case of discontinuous transfers 891
Figure 259. Transmission using DMA 896
Figure 260. Reception using DMA 896
Figure 261. TI mode frame format error detection 898
Figure 262. I^2S block diagram 899
Figure 263. I2S full duplex block diagram 900
Figure 264. I^2S Philips protocol waveforms (16/32-bit full accuracy, CPOL = 0) 902
Figure 265. I^2S Philips standard waveforms (24-bit frame with CPOL = 0) 902
Figure 266. Transmitting 0x8EAA33 902
Figure 267. Receiving 0x8EAA33 903
Figure 268. I^2S Philips standard (16-bit extended to 32-bit packet frame with CPOL = 0) 903
Figure 269. Example 903
Figure 270. MSB justified 16-bit or 32-bit full-accuracy length with CPOL = 0 904
Figure 271. MSB justified 24-bit frame length with CPOL = 0 904
Figure 272. MSB justified 16-bit extended to 32-bit packet frame with CPOL = 0 904
Figure 273. LSB justified 16-bit or 32-bit full-accuracy with CPOL = 0 905
Figure 274. LSB justified 24-bit frame length with CPOL = 0. 905
Figure 275. Operations required to transmit 0x3478AE. 905
Figure 276. Operations required to receive 0x3478AE 906
Figure 277. LSB justified 16-bit extended to 32-bit packet frame with CPOL = 0 906
Figure 278. Example of LSB justified 16-bit extended to 32-bit packet frame 906
Figure 279. PCM standard waveforms (16-bit) 907
Figure 280. PCM standard waveforms (16-bit extended to 32-bit packet frame). 907
Figure 281. Audio sampling frequency definition 908
Figure 282. I^2S clock generator architecture 908
Figure 283. Functional block diagram 928
Figure 284. Audio frame 930
Figure 285. FS role is start of frame + channel side identification (FSDEF = TRIS = 1) 933
Figure 286. FS role is start of frame (FSDEF = 0) 933
Figure 287. Slot size configuration with FBOFF = 0 in SAI_xSLOTR 934
Figure 288. First bit offset 934
Figure 289. Audio block clock generator overview 935
Figure 290. AC’97 audio frame 939
Figure 291. Data companding hardware in an audio block in the SAI 941
Figure 292. Tristate strategy on SD output line on an inactive slot 943
Figure 293. Tristate on output data line in a protocol like I2S 944
Figure 294. Overrun detection error. 945
Figure 295. FIFO underrun event 946
Figure 296. USART block diagram 968
Figure 297. Word length programming 969

Figure 298. Configurable stop bits . . . 971
Figure 299. TC/TXE behavior when transmitting . . . 972
Figure 300. Start bit detection when oversampling by 16 or 8 . . . 973
Figure 301. Data sampling when oversampling by 16 . . . 976
Figure 302. Data sampling when oversampling by 8 . . . 977
Figure 303. Mute mode using Idle line detection . . . 990
Figure 304. Mute mode using address mark detection . . . 990
Figure 305. Break detection in LIN mode (11-bit break length - LBDL bit is set) . . . 993
Figure 306. Break detection in LIN mode vs. Framing error detection . . . 994
Figure 307. USART example of synchronous transmission . . . 995
Figure 308. USART data clock timing diagram (M=0) . . . 995
Figure 309. USART data clock timing diagram (M=1) . . . 996
Figure 310. RX data setup/hold time . . . 996
Figure 311. ISO 7816-3 asynchronous protocol . . . 997
Figure 312. Parity error detection using the 1.5 stop bits . . . 998
Figure 313. IrDA SIR ENDEC- block diagram . . . 1000
Figure 314. IrDA data modulation (3/16) -Normal mode . . . 1000
Figure 315. Transmission using DMA . . . 1002
Figure 316. Reception using DMA . . . 1003
Figure 317. Hardware flow control between 2 USARTs . . . 1003
Figure 318. RTS flow control . . . 1004
Figure 319. CTS flow control . . . 1005
Figure 320. USART interrupt mapping diagram . . . 1006
Figure 321. SDIO “no response” and “no data” operations . . . 1020
Figure 322. SDIO (multiple) block read operation . . . 1020
Figure 323. SDIO (multiple) block write operation . . . 1021
Figure 324. SDIO sequential read operation . . . 1021
Figure 325. SDIO sequential write operation . . . 1021
Figure 326. SDIO block diagram . . . 1022
Figure 327. SDIO adapter . . . 1023
Figure 328. Control unit . . . 1024
Figure 329. SDIO adapter command path . . . 1025
Figure 330. Command path state machine (CPSM) . . . 1026
Figure 331. SDIO command transfer . . . 1027
Figure 332. Data path . . . 1029
Figure 333. Data path state machine (DPSM) . . . 1030
Figure 334. CAN network topology . . . 1077
Figure 335. Dual CAN block diagram . . . 1079
Figure 336. bxCAN operating modes . . . 1081
Figure 337. bxCAN in silent mode . . . 1082
Figure 338. bxCAN in loop back mode . . . 1082
Figure 339. bxCAN in combined mode . . . 1083
Figure 340. Transmit mailbox states . . . 1085
Figure 341. Receive FIFO states . . . 1086
Figure 342. Filter bank scale configuration - register organization . . . 1088
Figure 343. Example of filter numbering . . . 1089
Figure 344. Filtering mechanism - Example . . . 1090
Figure 345. CAN error state diagram . . . 1092
Figure 346. Bit timing . . . 1094
Figure 347. CAN frames . . . 1095
Figure 348. Event flags and interrupt generation . . . 1096
Figure 349. RX and TX mailboxes . . . 1107

Figure 350. ETH block diagram . . . 1126
Figure 351. SMI interface signals . . . 1127
Figure 352. MDIO timing and frame structure - Write cycle . . . 1128
Figure 353. MDIO timing and frame structure - Read cycle . . . 1129
Figure 354. Media independent interface signals . . . 1129
Figure 355. MII clock sources . . . 1131
Figure 356. Reduced media-independent interface signals . . . 1132
Figure 357. RMII clock sources . . . 1132
Figure 358. Clock scheme . . . 1133
Figure 359. Address field format . . . 1135
Figure 360. MAC frame format . . . 1136
Figure 361. Tagged MAC frame format . . . 1137
Figure 362. Transmission bit order . . . 1143
Figure 363. Transmission with no collision . . . 1143
Figure 364. Transmission with collision . . . 1144
Figure 365. Frame transmission in MMI and RMII modes . . . 1144
Figure 366. Receive bit order . . . 1148
Figure 367. Reception with no error . . . 1149
Figure 368. Reception with errors . . . 1149
Figure 369. Reception with false carrier indication . . . 1149
Figure 370. MAC core interrupt masking scheme . . . 1150
Figure 371. Wakeup frame filter register . . . 1154
Figure 372. Networked time synchronization . . . 1158
Figure 373. System time update using the Fine correction method . . . 1160
Figure 374. PTP trigger output to TIM2 ITR1 connection . . . 1162
Figure 375. PPS output . . . 1163
Figure 376. Descriptor ring and chain structure . . . 1164
Figure 377. TxDMA operation in Default mode . . . 1168
Figure 378. TxDMA operation in OSF mode . . . 1170
Figure 379. Normal transmit descriptor . . . 1171
Figure 380. Enhanced transmit descriptor . . . 1177
Figure 381. Receive DMA operation . . . 1179
Figure 382. Normal Rx DMA descriptor structure . . . 1181
Figure 383. Enhanced receive descriptor field format with IEEE1588 time stamp enabled . . . 1187
Figure 384. Interrupt scheme . . . 1190
Figure 385. Ethernet MAC remote wakeup frame filter register (ETH_MACRWUFFR) . . . 1200
Figure 386. OTG full-speed block diagram . . . 1243
Figure 387. OTG A-B device connection . . . 1245
Figure 388. USB peripheral-only connection . . . 1247
Figure 389. USB host-only connection . . . 1251
Figure 390. SOF connectivity . . . 1255
Figure 391. Updating OTG_FS_HFIR dynamically . . . 1258
Figure 392. Device-mode FIFO address mapping and AHB FIFO access mapping . . . 1259
Figure 393. Host-mode FIFO address mapping and AHB FIFO access mapping . . . 1260
Figure 394. Interrupt hierarchy . . . 1264
Figure 395. CSR memory map . . . 1266
Figure 396. Transmit FIFO write task . . . 1338
Figure 397. Receive FIFO read task . . . 1339
Figure 398. Normal bulk/control OUT/SETUP and bulk/control IN transactions . . . 1340
Figure 399. Bulk/control IN transactions . . . 1343
Figure 400. Normal interrupt OUT/IN transactions . . . 1345
Figure 401. Normal isochronous OUT/IN transactions . . . 1350

Figure 402. Receive FIFO packet read . . . 1356
Figure 403. Processing a SETUP packet . . . 1358
Figure 404. Bulk OUT transaction . . . 1365
Figure 405. TRDT max timing case . . . 1374
Figure 406. A-device SRP . . . 1375
Figure 407. B-device SRP . . . 1376
Figure 408. A-device HNP . . . 1377
Figure 409. B-device HNP . . . 1379
Figure 410. USB OTG interface block diagram . . . 1384
Figure 411. USB host-only connection . . . 1391
Figure 412. SOF trigger output to TIM2 ITR1 connection . . . 1396
Figure 413. Updating OTG_HS_HFIR dynamically . . . 1398
Figure 414. Interrupt hierarchy . . . 1401
Figure 415. CSR memory map . . . 1403
Figure 416. Transmit FIFO write task . . . 1492
Figure 417. Receive FIFO read task . . . 1493
Figure 418. Normal bulk/control OUT/SETUP and bulk/control IN transactions - DMA mode . . . 1494
Figure 419. Normal bulk/control OUT/SETUP and bulk/control IN transactions - Slave mode . . . 1495
Figure 420. Bulk/control IN transactions - DMA mode . . . 1498
Figure 421. Bulk/control IN transactions - Slave mode . . . 1499
Figure 422. Normal interrupt OUT/IN transactions - DMA mode . . . 1501
Figure 423. Normal interrupt OUT/IN transactions - Slave mode . . . 1502
Figure 424. Normal isochronous OUT/IN transactions - DMA mode . . . 1507
Figure 425. Normal isochronous OUT/IN transactions - Slave mode . . . 1508
Figure 426. Receive FIFO packet read in slave mode . . . 1519
Figure 427. Processing a SETUP packet . . . 1521
Figure 428. Slave mode bulk OUT transaction . . . 1528
Figure 429. TRDT max timing case . . . 1537
Figure 430. A-device SRP . . . 1538
Figure 431. B-device SRP . . . 1539
Figure 432. A-device HNP . . . 1540
Figure 433. B-device HNP . . . 1542
Figure 434. FSMC block diagram . . . 1545
Figure 435. FSMC memory banks . . . 1547
Figure 436. Mode1 read accesses . . . 1554
Figure 437. Mode1 write accesses . . . 1555
Figure 438. ModeA read accesses . . . 1556
Figure 439. ModeA write accesses . . . 1557
Figure 440. Mode2 and mode B read accesses . . . 1559
Figure 441. Mode2 write accesses . . . 1559
Figure 442. Mode B write accesses . . . 1560
Figure 443. Mode C read accesses . . . 1562
Figure 444. Mode C write accesses . . . 1562
Figure 445. Mode D read accesses . . . 1564
Figure 446. Mode D write accesses . . . 1565
Figure 447. Multiplexed read accesses . . . 1567
Figure 448. Multiplexed write accesses . . . 1567
Figure 449. Asynchronous wait during a read access . . . 1570
Figure 450. Asynchronous wait during a write access . . . 1570
Figure 451. Wait configurations . . . 1572

Figure 452. Synchronous multiplexed read mode - NOR, PSRAM (CRAM) 1573
Figure 453. Synchronous multiplexed write mode - PSRAM (CRAM) 1575
Figure 454. NAND/PC Card controller timing for common memory access 1588
Figure 455. Access to non ‘CE don’t care’ NAND-Flash 1589
Figure 456. FMC block diagram. 1604
Figure 457. FMC memory banks 1607
Figure 458. Mode1 read access waveforms 1618
Figure 459. Mode1 write access waveforms 1618
Figure 460. ModeA read access waveforms 1620
Figure 461. ModeA write access waveforms 1621
Figure 462. Mode2 and mode B read access waveforms 1623
Figure 463. Mode2 write access waveforms 1623
Figure 464. ModeB write access waveforms 1624
Figure 465. ModeC read access waveforms 1626
Figure 466. ModeC write access waveforms 1626
Figure 467. ModeD read access waveforms 1628
Figure 468. ModeD write access waveforms 1629
Figure 469. Muxed read access waveforms 1631
Figure 470. Muxed write access waveforms 1631
Figure 471. Asynchronous wait during a read access waveforms 1633
Figure 472. Asynchronous wait during a write access waveforms. 1634
Figure 473. Wait configuration waveforms. 1636
Figure 474. Synchronous multiplexed read mode waveforms - NOR, PSRAM (CRAM) 1636
Figure 475. Synchronous multiplexed write mode waveforms - PSRAM (CRAM). 1638
Figure 476. NAND Flash/PC Card controller waveforms for common memory access. 1651
Figure 477. Access to non ‘CE don’t care’ NAND-Flash 1652
Figure 478. Burst write SDRAM access waveforms 1665
Figure 479. Burst read SDRAM access 1666
Figure 480. Logic diagram of Read access with RBURST bit set (CAS=2, RPIPE=0) 1667
Figure 481. Read access crossing row boundary 1669
Figure 482. Write access crossing row boundary 1669
Figure 483. Self-refresh mode 1672
Figure 484. Power-down mode 1673
Figure 485. Block diagram of STM32 MCU and Cortex®-M4 with FPU-level debug support 1683
Figure 486. SWJ debug port 1685
Figure 487. JTAG TAP connections 1689
Figure 488. TPIU block diagram 1707

1 Documentation conventions

The STM32F401xx devices have an Arm®[a] Cortex®-M4 with FPU.

1.1 List of abbreviations for registers

The following abbreviations are used in register descriptions:

read/write (rw)	Software can read and write to these bits.
read-only (r)	Software can only read these bits.
write-only (w)	Software can only write to this bit. Reading the bit returns the reset value.
read/clear (rc_w1)	Software can read as well as clear this bit by writing 1. Writing ‘0’ has no effect on the bit value.
read/clear (rc_w0)	Software can read as well as clear this bit by writing 0. Writing ‘1’ has no effect on the bit value.
read/clear by read (rc_r)	Software can read this bit. Reading this bit automatically clears it to ‘0’. Writing ‘0’ has no effect on the bit value.
read/set (rs)	Software can read as well as set this bit. Writing ‘0’ has no effect on the bit value.
read-only write trigger (rt_w)	Software can read this bit. Writing ‘0’ or ‘1’ triggers an event but has no effect on the bit value.
toggle (t)	Software can only toggle this bit by writing ‘1’. Writing ‘0’ has no effect.
Reserved (Res.)	Reserved bit, must be kept at reset value.

a. Arm is a registered trademark of Arm Limited (or its subsidiaries) in the US and/or elsewhere.

1.2 Glossary

This section gives a brief definition of acronyms and abbreviations used in this document:

- The CPU core integrates two debug ports:
  - JTAG debug port (JTAG-DP) provides a 5-pin standard interface based on the Joint Test Action Group (JTAG) protocol.
  - SWD debug port (SWD-DP) provides a 2-pin (clock and data) interface based on the Serial Wire Debug (SWD) protocol.

    For both the JTAG and SWD protocols, please refer to the Cortex®-M4 with FPU Technical Reference Manual
- Word: data/instruction of 32-bit length.
- Half word: data/instruction of 16-bit length.
- Byte: data of 8-bit length.
- Double word: data of 64-bit length.
- IAP (in-application programming): IAP is the ability to reprogram the Flash memory of a microcontroller while the user program is running.
- ICP (in-circuit programming): ICP is the ability to program the Flash memory of a microcontroller using the JTAG protocol, the SWD protocol or the bootloader while the device is mounted on the user application board.
- I-Code: this bus connects the Instruction bus of the CPU core to the Flash instruction interface. Prefetch is performed on this bus.
- D-Code: this bus connects the D-Code bus (literal load and debug access) of the CPU to the Flash data interface.
- Option bytes: product configuration bits stored in the Flash memory.
- OBL: option byte loader.
- AHB: advanced high-performance bus.
- CPU: refers to the Cortex®-M4 with FPU core.

1.3 Peripheral availability

For peripheral availability and number across all STM32F405xx/07xx and STM32F415xx/17xx sales types, please refer to the STM32F405xx/07xx and STM32F415xx/17xx datasheets.

For peripheral availability and number across all STM32F42xxx and STM32F43xxx sales types, please refer to the STM32F42xxx and STM32F43xxx datasheets.

2 Memory and bus architecture

2.1 System architecture

In STM32F405xx/07xx and STM32F415xx/17xx, the main system consists of 32-bit multilayer AHB bus matrix that interconnects:

The main system consists of 32-bit multilayer AHB bus matrix that interconnects:

- Eight masters:
  - Cortex®-M4 with FPU core I-bus, D-bus and S-bus
  - DMA1 memory bus
  - DMA2 memory bus
  - DMA2 peripheral bus
  - Ethernet DMA bus
  - USB OTG HS DMA bus
- Seven slaves:
  - Internal Flash memory ICode bus
  - Internal Flash memory DCode bus
  - Main internal SRAM1 (112 KB)
  - Auxiliary internal SRAM2 (16 KB)
  - AHB1 peripherals including AHB to APB bridges and APB peripherals
  - AHB2 peripherals
  - FSMC

The bus matrix provides access from a master to a slave, enabling concurrent access and efficient operation even when several high-speed peripherals work simultaneously. The 64-Kbyte CCM (core coupled memory) data RAM is not part of the bus matrix and can be accessed only through the CPU. This architecture is shown in *Figure 1*.

Figure 1. System architecture for STM32F405xx/07xx and STM32F415xx/17xx devices

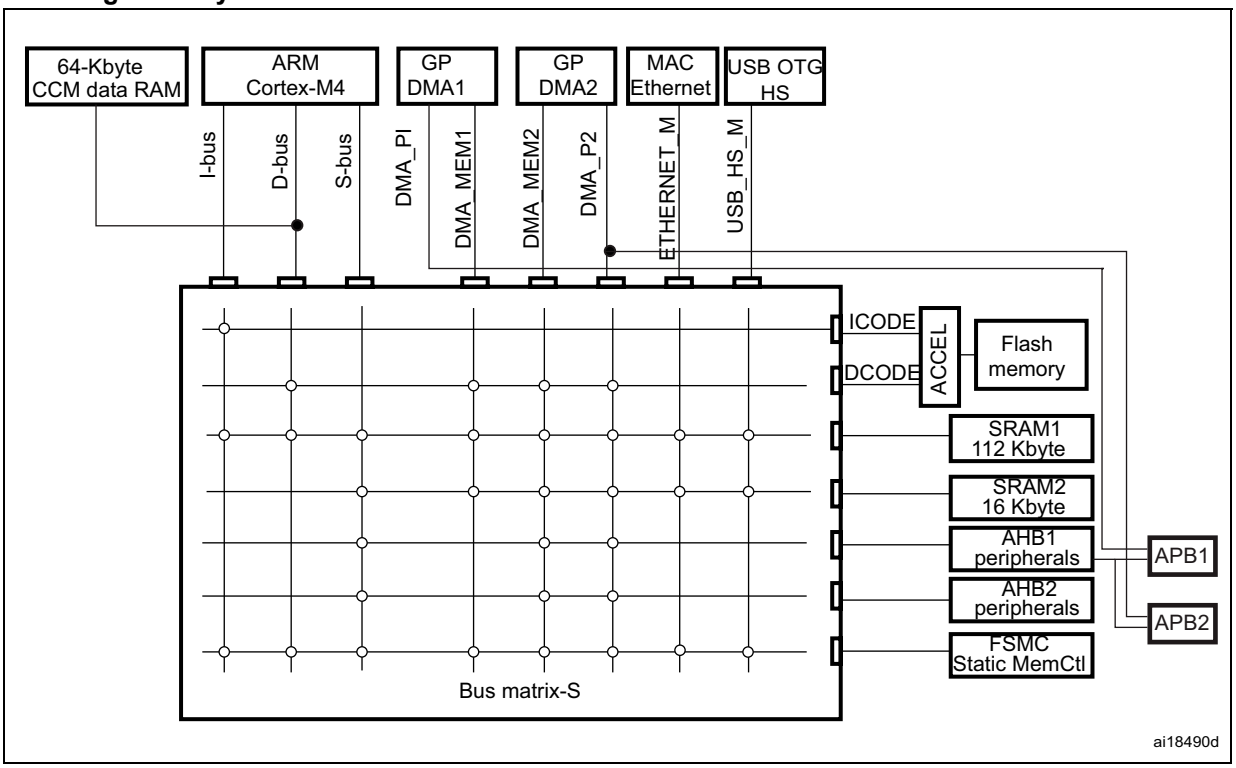

In the STM32F42xx and STM32F43xx devices, the main system consists of 32-bit multilayer AHB bus matrix that interconnects:

- Ten masters:
  - Cortex®-M4 with FPU core I-bus, D-bus and S-bus
  - DMA1 memory bus
  - DMA2 memory bus
  - DMA2 peripheral bus
  - Ethernet DMA bus
  - USB OTG HS DMA bus
  - LCD Controller DMA-bus
  - DMA2D (Chrom-Art Accelerator™) memory bus
- Eight slaves:
  - Internal Flash memory ICode bus
  - Internal Flash memory DCode bus
  - Main internal SRAM1 (112 KB)
  - Auxiliary internal SRAM2 (16 KB)
  - Auxiliary internal SRAM3 (64 KB)
  - AHB1peripherals including AHB to APB bridges and APB peripherals
  - AHB2 peripherals
  - FMC

The bus matrix provides access from a master to a slave, enabling concurrent access and efficient operation even when several high-speed peripherals work simultaneously. The 64-Kbyte CCM (core coupled memory) data RAM is not part of the bus matrix and can be accessed only through the CPU. This architecture is shown in *Figure 2*.

Figure 2. System architecture for STM32F42xxx and STM32F43xxx devices

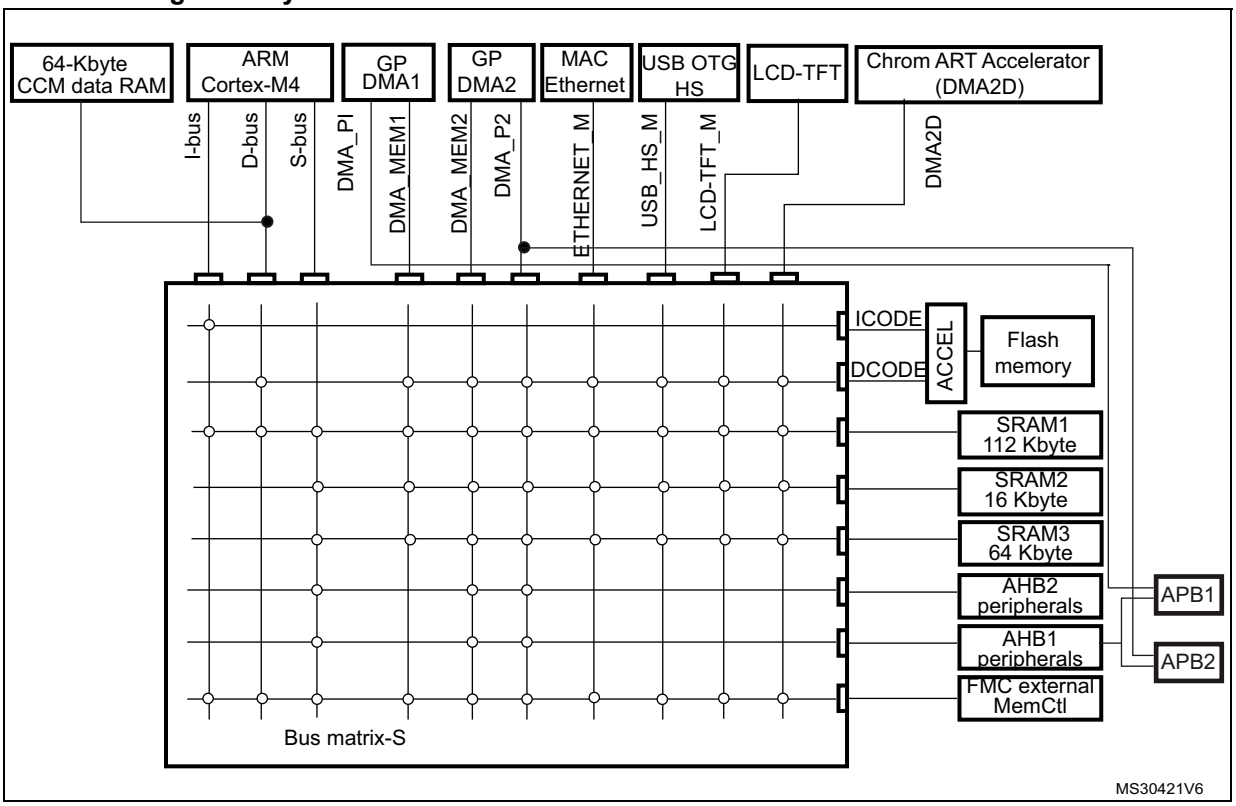

2.1.1 I-bus

This bus connects the Instruction bus of the Cortex®-M4 with FPU core to the BusMatrix. This bus is used by the core to fetch instructions. The target of this bus is a memory containing code (internal Flash memory/SRAM or external memories through the FSMC/FMC).

2.1.2 D-bus

This bus connects the databus of the Cortex®-M4 with FPU to the 64-Kbyte CCM data RAM to the BusMatrix. This bus is used by the core for literal load and debug access. The target of this bus is a memory containing code or data (internal Flash memory or external memories through the FSMC/FMC).

2.1.3 S-bus

This bus connects the system bus of the Cortex®-M4 with FPU core to a BusMatrix. This bus is used to access data located in a peripheral or in SRAM. Instructions may also be fetched on this bus (less efficient than ICode). The targets of this bus are the internal SRAM1, SRAM2 and SRAM3, the AHB1 peripherals including the APB peripherals, the AHB2 peripherals and the external memories through the FSMC/FMC.

2.1.4 DMA memory bus

This bus connects the DMA memory bus master interface to the BusMatrix. It is used by the DMA to perform transfer to/from memories. The targets of this bus are data memories: internal SRAMs (SRAM1, SRAM2 and SRAM3) and external memories through the FSMC/FMC.

2.1.5 DMA peripheral bus

This bus connects the DMA peripheral master bus interface to the BusMatrix. This bus is used by the DMA to access AHB peripherals or to perform memory-to-memory transfers. The targets of this bus are the AHB and APB peripherals plus data memories: internal SRAMs (SRAM1, SRAM2 and SRAM3) and external memories through the FSMC/FMC.

2.1.6 Ethernet DMA bus

This bus connects the Ethernet DMA master interface to the BusMatrix. This bus is used by the Ethernet DMA to load/store data to a memory. The targets of this bus are data memories: internal SRAMs (SRAM1, SRAM2, SRAM3), internal Flash memory, and external memories through the FSMC/FMC.

2.1.7 USB OTG HS DMA bus

This bus connects the USB OTG HS DMA master interface to the BusMatrix. This bus is used by the USB OTG DMA to load/store data to a memory. The targets of this bus are data memories: internal SRAMs (SRAM1, SRAM2, SRAM3), internal Flash memory, and external memories through the FSMC/FMC.

2.1.8 LCD-TFT controller DMA bus

This bus connects the LCD controller DMA master interface to the BusMatrix. It is used by the LCD-TFT DMA to load/store data to a memory. The targets of this bus are data memories: internal SRAMs (SRAM1, SRAM2, SRAM3), external memories through FMC, and internal Flash memory.

2.1.9 DMA2D bus

This bus connect the DMA2D master interface to the BusMatrix. This bus is used by the DMA2D graphic Accelerator to load/store data to a memory. The targets of this bus are data memories: internal SRAMs (SRAM1, SRAM2, SRAM3), external memories through FMC, and internal Flash memory.

2.1.10 BusMatrix

The BusMatrix manages the access arbitration between masters. The arbitration uses a round-robin algorithm.

2.1.11 AHB/APB bridges (APB)

The two AHB/APB bridges, APB1 and APB2, provide full synchronous connections between the AHB and the two APB buses, allowing flexible selection of the peripheral frequency.

Refer to the device datasheets for more details on APB1 and APB2 maximum frequencies, and to *Table 1* for the address mapping of AHB and APB peripherals.

After each device reset, all peripheral clocks are disabled (except for the SRAM and Flash memory interface). Before using a peripheral you have to enable its clock in the RCC_AHBxENR or RCC_APBxENR register.

Note: When a 16- or an 8-bit access is performed on an APB register, the access is transformed into a 32-bit access: the bridge duplicates the 16- or 8-bit data to feed the 32-bit vector.

2.2 Memory organization

Program memory, data memory, registers and I/O ports are organized within the same linear 4 Gbyte address space.

The bytes are coded in memory in little endian format. The lowest numbered byte in a word is considered the word's least significant byte and the highest numbered byte, the word's most significant.

For the detailed mapping of peripheral registers, please refer to the related chapters.

The addressable memory space is divided into 8 main blocks, each of 512 MB.

All the memory areas that are not allocated to on-chip memories and peripherals are considered "Reserved"). Refer to the memory map figure in the product datasheet.

2.3 Memory map

See the datasheet corresponding to your device for a comprehensive diagram of the memory map. *Table 1* gives the boundary addresses of the peripherals available in all STM32F4xx devices.

Table 1. STM32F4xx register boundary addresses

Boundary address	Peripheral	Bus	Register map
0xA000 0000 - 0xA000 0FFF	FSMC control register (STM32F405xx/07xx and STM32F415xx/17xx)/ FMC control register (STM32F42xxx and STM32F43xxx)	AHB3	*Section 36.6.9: FSMC register map on page 1600* *Section 37.8: FMC register map on page 1680*

Table 1. STM32F4xx register boundary addresses (continued)

Boundary address	Peripheral	Bus	Register map
0x5006 0800 - 0x5006 0BFF	RNG	AHB2	*Section 24.4.4: RNG register map on page 771*
0x5006 0400 - 0x5006 07FF	HASH		*Section 25.4.9: HASH register map on page 795*
0x5006 0000 - 0x5006 03FF	CRYP		*Section 23.6.13: CRYP register map on page 763*
0x5005 0000 - 0x5005 03FF	DCMI		*Section 15.8.12: DCMI register map on page 478*
0x5000 0000 - 0x5003 FFFF	USB OTG FS		*Section 34.16.6: OTG_FS register map on page 1326*
0x4004 0000 - 0x4007 FFFF	USB OTG HS	AHB1	*Section 35.12.6: OTG_HS register map on page 1472*
0x4002 B000 - 0x4002 BBFF	DMA2D		*Section 11.5: DMA2D registers on page 352*
0x4002 8000 - 0x4002 93FF	ETHERNET MAC		*Section 33.8.5: Ethernet register maps on page 1236*
0x4002 6400 - 0x4002 67FF	DMA2		*Section 10.5.11: DMA register map on page 335*
0x4002 6000 - 0x4002 63FF	DMA1		
0x4002 4000 - 0x4002 4FFF	BKPSRAM		
0x4002 3C00 - 0x4002 3FFF	Flash interface register		*Section 3.9: Flash interface registers*
0x4002 3800 - 0x4002 3BFF	RCC		*Section 7.3.24: RCC register map on page 265*
0x4002 3000 - 0x4002 33FF	CRC		*Section 4.4.4: CRC register map on page 115*
0x4002 2800 - 0x4002 2BFF	GPIOK		*Section 8.4.11: GPIO register map on page 287*
0x4002 2400 - 0x4002 27FF	GPIOJ		
0x4002 2000 - 0x4002 23FF	GPIOI		*Section 8.4.11: GPIO register map on page 287*
0x4002 1C00 - 0x4002 1FFF	GPIOH		
0x4002 1800 - 0x4002 1BFF	GPIOG		
0x4002 1400 - 0x4002 17FF	GPIOF		
0x4002 1000 - 0x4002 13FF	GPIOE		
0x4002 0C00 - 0x4002 0FFF	GPIOD		
0x4002 0800 - 0x4002 0BFF	GPIOC		
0x4002 0400 - 0x4002 07FF	GPIOB		
0x4002 0000 - 0x4002 03FF	GPIOA		
0x4001 6800 - 0x4001 6BFF	LCD-TFT	APB2	*Section 16.7.26: LTDC register map on page 512*
0x4001 5800 - 0x4001 5BFF	SAI1		*Section 29.17.9: SAI register map on page 963*
0x4001 5400 - 0x4001 57FF	SPI6	APB2	*Section 28.5.10: SPI register map on page 925*
0x4001 5000 - 0x4001 53FF	SPI5		

Table 1. STM32F4xx register boundary addresses (continued)

Boundary address	Peripheral	Bus	Register map
0x4001 4800 - 0x4001 4BFF	TIM11	APB2	*Section 19.5.12: TIM10/11/13/14 register map on page 694*
0x4001 4400 - 0x4001 47FF	TIM10		
0x4001 4000 - 0x4001 43FF	TIM9		*Section 19.4.13: TIM9/12 register map on page 684*
0x4001 3C00 - 0x4001 3FFF	EXTI		*Section 12.3.7: EXTI register map on page 387*
0x4001 3800 - 0x4001 3BFF	SYSCFG		*Section 9.2.8: SYSCFG register maps for STM32F405xx/07xx and STM32F415xx/17xx on page 294* and *Section 9.3.8: SYSCFG register maps for STM32F42xxx and STM32F43xxx on page 301*
0x4001 3400 - 0x4001 37FF	SPI4	APB2	*Section 28.5.10: SPI register map on page 925*
0x4001 3000 - 0x4001 33FF	SPI1	APB2	*Section 28.5.10: SPI register map on page 925*
0x4001 2C00 - 0x4001 2FFF	SDIO		*Section 31.9.16: SDIO register map on page 1074*
0x4001 2000 - 0x4001 23FF	ADC1 - ADC2 - ADC3		*Section 13.13.18: ADC register map on page 430*
0x4001 1400 - 0x4001 17FF	USART6		*Section 30.6.8: USART register map on page 1018*
0x4001 1000 - 0x4001 13FF	USART1		
0x4001 0400 - 0x4001 07FF	TIM8		*Section 17.4.21: TIM1 and TIM8 register map on page 587*
0x4001 0000 - 0x4001 03FF	TIM1		
0x4000 7C00 - 0x4000 7FFF	UART8	APB1	*Section 30.6.8: USART register map on page 1018*
0x4000 7800 - 0x4000 7BFF	UART7		

Table 1. STM32F4xx register boundary addresses (continued)

Boundary address	Peripheral	Bus	Register map
0x4000 7400 - 0x4000 77FF	DAC	APB1	*Section 14.5.15: DAC register map on page 453*
0x4000 7000 - 0x4000 73FF	PWR		*Section 5.6: PWR register map on page 149*
0x4000 6800 - 0x4000 6BFF	CAN2		*Section 32.9.5: bxCAN register map on page 1118*
0x4000 6400 - 0x4000 67FF	CAN1		
0x4000 5C00 - 0x4000 5FFF	I2C3		*Section 27.6.11: I2C register map on page 872*
0x4000 5800 - 0x4000 5BFF	I2C2		
0x4000 5400 - 0x4000 57FF	I2C1		
0x4000 5000 - 0x4000 53FF	UART5		*Section 30.6.8: USART register map on page 1018*
0x4000 4C00 - 0x4000 4FFF	UART4		
0x4000 4800 - 0x4000 4BFF	USART3		
0x4000 4400 - 0x4000 47FF	USART2		
0x4000 4000 - 0x4000 43FF	I2S3ext		*Section 28.5.10: SPI register map on page 925*
0x4000 3C00 - 0x4000 3FFF	SPI3 / I2S3		
0x4000 3800 - 0x4000 3BFF	SPI2 / I2S2		
0x4000 3400 - 0x4000 37FF	I2S2ext		
0x4000 3000 - 0x4000 33FF	IWDG		*Section 21.4.5: IWDG register map on page 712*
0x4000 2C00 - 0x4000 2FFF	WWDG		*Section 22.6.4: WWDG register map on page 719*
0x4000 2800 - 0x4000 2BFF	RTC & BKP Registers		*Section 26.6.21: RTC register map on page 836*
0x4000 2000 - 0x4000 23FF	TIM14		*Section 19.5.12: TIM10/11/13/14 register map on page 694*
0x4000 1C00 - 0x4000 1FFF	TIM13		
0x4000 1800 - 0x4000 1BFF	TIM12		*Section 19.4.13: TIM9/12 register map on page 684*
0x4000 1400 - 0x4000 17FF	TIM7		*Section 20.4.9: TIM6 and TIM7 register map on page 707*
0x4000 1000 - 0x4000 13FF	TIM6		
0x4000 0C00 - 0x4000 0FFF	TIM5		*Section 18.4.21: TIMx register map on page 648*
0x4000 0800 - 0x4000 0BFF	TIM4		
0x4000 0400 - 0x4000 07FF	TIM3		
0x4000 0000 - 0x4000 03FF	TIM2		

2.3.1 Embedded SRAM

The STM32F405xx/07xx and STM32F415xx/17xx feature 4 Kbytes of backup SRAM (see *Section 5.1.2: Battery backup domain*) plus 192 Kbytes of system SRAM.

The STM32F42xxx and STM32F43xxx feature 4 Kbytes of backup SRAM (see *Section 5.1.2: Battery backup domain*) plus 256 Kbytes of system SRAM.

The embedded SRAM can be accessed as bytes, half-words (16 bits) or full words (32 bits). Read and write operations are performed at CPU speed with 0 wait state. The embedded SRAM is divided into up to three blocks:

- SRAM1 and SRAM2 mapped at address 0x2000 0000 and accessible by all AHB masters.
- SRAM3 (available on STM32F42xxx and STM32F43xxx) mapped at address 0x2002 0000 and accessible by all AHB masters.
- CCM (core coupled memory) mapped at address 0x1000 0000 and accessible only by the CPU through the D-bus.

The AHB masters support concurrent SRAM accesses (from the Ethernet or the USB OTG HS): for instance, the Ethernet MAC can read/write from/to SRAM2 while the CPU is reading/writing from/to SRAM1 or SRAM3.

The CPU can access the SRAM1, SRAM2, and SRAM3 through the System Bus or through the I-Code/D-Code buses when boot from SRAM is selected or when physical remap is selected (*Section 9.2.1: SYSCFG memory remap register (SYSCFG_MEMRMP)* in the SYSCFG controller). To get the max performance on SRAM execution, physical remap should be selected (boot or software selection).

2.3.2 Flash memory overview

The Flash memory interface manages CPU AHB I-Code and D-Code accesses to the Flash memory. It implements the erase and program Flash memory operations and the read and write protection mechanisms. It accelerates code execution with a system of instruction prefetch and cache lines.

The Flash memory is organized as follows:

- A main memory block divided into sectors.
- System memory from which the device boots in System memory boot mode
- 512 OTP (one-time programmable) bytes for user data.
- Option bytes to configure read and write protection, BOR level, watchdog software/hardware and reset when the device is in Standby or Stop mode.

Refer to *Section 3: Embedded Flash memory interface* for more details.

2.3.3 Bit banding

The Cortex®-M4 with FPU memory map includes two bit-band regions. These regions map each word in an alias region of memory to a bit in a bit-band region of memory. Writing to a word in the alias region has the same effect as a read-modify-write operation on the targeted bit in the bit-band region.

In the STM32F4xx devices both the peripheral registers and the SRAM are mapped to a bit-band region, so that single bit-band write and read operations are allowed. The operations

are only available for Cortex®-M4 with FPU accesses, and not from other bus masters (e.g. DMA).

A mapping formula shows how to reference each word in the alias region to a corresponding bit in the bit-band region. The mapping formula is:

bit_word_addr = *bit_band_base* + (*byte_offset* x 32) + (*bit_number* × 4)

where:

- *bit_word_addr* is the address of the word in the alias memory region that maps to the targeted bit
- *bit_band_base* is the starting address of the alias region
- *byte_offset* is the number of the byte in the bit-band region that contains the targeted bit
- *bit_number* is the bit position (0-7) of the targeted bit

Example

The following example shows how to map bit 2 of the byte located at SRAM address 0x20000300 to the alias region:

0x22006008 = 0x22000000 + (0x300*32) + (2*4)

Writing to address 0x22006008 has the same effect as a read-modify-write operation on bit 2 of the byte at SRAM address 0x20000300.

Reading address 0x22006008 returns the value (0x01 or 0x00) of bit 2 of the byte at SRAM address 0x20000300 (0x01: bit set; 0x00: bit reset).

For more information on bit-banding, please refer to the *Cortex®-M4 with FPU programming manual* (see *Related documents on page 1*).

2.4 Boot configuration

Due to its fixed memory map, the code area starts from address 0x0000 0000 (accessed through the ICode/DCode buses) while the data area (SRAM) starts from address 0x2000 0000 (accessed through the system bus). The Cortex®-M4 with FPU CPU always fetches the reset vector on the ICode bus, which implies to have the boot space available only in the code area (typically, Flash memory). STM32F4xx microcontrollers implement a special mechanism to be able to boot from other memories (like the internal SRAM).

In the STM32F4xx, three different boot modes can be selected through the BOOT[1:0] pins as shown in *Table 2*.

Table 2. Boot modes

Boot mode selection pins		Boot mode	Aliasing
BOOT1	BOOT0		
x	0	Main Flash memory	Main Flash memory is selected as the boot space
0	1	System memory	System memory is selected as the boot space
1	1	Embedded SRAM	Embedded SRAM is selected as the boot space

The values on the BOOT pins are latched on the 4th rising edge of SYSCLK after a reset. It is up to the user to set the BOOT1 and BOOT0 pins after reset to select the required boot mode.

BOOT0 is a dedicated pin while BOOT1 is shared with a GPIO pin. Once BOOT1 has been sampled, the corresponding GPIO pin is free and can be used for other purposes.

The BOOT pins are also resampled when the device exits the Standby mode. Consequently, they must be kept in the required Boot mode configuration when the device is in the Standby mode. After this startup delay is over, the CPU fetches the top-of-stack value from address 0x0000 0000, then starts code execution from the boot memory starting from 0x0000 0004.

Note: When the device boots from SRAM, in the application initialization code, you have to relocate the vector table in SRAM using the NVIC exception table and the offset register.

In STM32F42xxx and STM32F43xxx devices, when booting from the main Flash memory, the application software can either boot from bank 1 or from bank 2. By default, boot from bank 1 is selected.

To select boot from Flash memory bank 2, set the BFB2 bit in the user option bytes. When this bit is set and the boot pins are in the boot from main Flash memory configuration, the device boots from system memory, and the boot loader jumps to execute the user application programmed in Flash memory bank 2. For further details, please refer to AN2606.

Embedded bootloader

The embedded bootloader mode is used to reprogram the Flash memory using one of the following serial interfaces:

- USART1 (PA9/PA10)
- USART3 (PB10/11 and PC10/11)
- CAN2 (PB5/13)
- USB OTG FS (PA11/12) in Device mode (DFU: device firmware upgrade).

The USART peripherals operate at the internal 16 MHz oscillator (HSI) frequency, while the CAN and USB OTG FS require an external clock (HSE) multiple of 1 MHz (ranging from 4 to 26 MHz).

The embedded bootloader code is located in system memory. It is programmed by ST during production. For additional information, refer to application note AN2606.

Physical remap in STM32F405xx/07xx and STM32F415xx/17xx

Once the boot pins are selected, the application software can modify the memory accessible in the code area (in this way the code can be executed through the ICode bus in place of the System bus). This modification is performed by programming the *Section 9.2.1: SYSCFG memory remap register (SYSCFG_MEMRMP)* in the SYSCFG controller.

The following memories can thus be remapped:

- Main Flash memory
- System memory
- Embedded SRAM1 (112 KB)
- FSMC bank 1 (NOR/PSRAM 1 and 2)

Table 3. Memory mapping vs. Boot mode/physical remap in STM32F405xx/07xx and STM32F415xx/17xx

Addresses	Boot/Remap in main Flash memory	Boot/Remap in embedded SRAM	Boot/Remap in System memory	Remap in FSMC
0x2001 C000 - 0x2001 FFFF	SRAM2 (16 KB)	SRAM2 (16 KB)	SRAM2 (16 KB)	SRAM2 (16 KB)
0x2000 0000 - 0x2001 BFFF	SRAM1 (112 KB)	SRAM1 (112 KB)	SRAM1 (112 KB)	SRAM1 (112 KB)
0x1FFF 0000 - 0x1FFF 77FF	System memory	System memory	System memory	System memory
0x0810 0000 - 0x0FFF FFFF	Reserved	Reserved	Reserved	Reserved
0x0800 0000 - 0x080F FFFF	Flash memory	Flash memory	Flash memory	Flash memory
0x0400 0000 - 0x07FF FFFF	Reserved	Reserved	Reserved	FSMC bank 1 NOR/PSRAM 2 (128 MB Aliased)
0x0000 0000 - 0x000F FFFF(1)(2)	Flash (1 MB) Aliased	SRAM1 (112 KB) Aliased	System memory (30 KB) Aliased	FSMC bank 1 NOR/PSRAM 1 (128 MB Aliased)

1. When the FSMC is remapped at address 0x0000 0000, only the first two regions of bank 1 memory controller (bank 1 NOR/PSRAM 1 and NOR/PSRAM 2) can be remapped. In remap mode, the CPU can access the external memory via ICode bus instead of System bus which boosts up the performance.
2. Even when aliased in the boot memory space, the related memory is still accessible at its original memory space.

Physical remap in STM32F42xxx and STM32F43xxx

Once the boot pins are selected, the application software can modify the memory accessible in the code area (in this way the code can be executed through the ICode bus in place of the System bus). This modification is performed by programming the *Section 9.2.1: SYSCFG memory remap register (SYSCFG_MEMRMP)* in the SYSCFG controller.

The following memories can thus be remapped:

- Main Flash memory
- System memory
- Embedded SRAM1 (112 KB)
- FMC bank 1 (NOR/PSRAM 1 and 2)
- FMC SDRAM bank 1

Table 4. Memory mapping vs. Boot mode/physical remap in STM32F42xxx and STM32F43xxx

Addresses	Boot/Remap in main Flash memory	Boot/Remap in embedded SRAM	Boot/Remap in System memory	Remap in FMC
0x2002 0000 - 0x2002 FFFF	SRAM3 (64 KB)	SRAM3 (64 KB)	SRAM3 (64 KB)	SRAM3 (64 KB)
0x2001 C000 - 0x2001 FFFF	SRAM2 (16 KB)	SRAM2 (16 KB)	SRAM2 (16 KB)	SRAM2 (16 KB)
0x2000 0000 - 0x2001 BFFF	SRAM1 (112 KB)	SRAM1 (112 KB)	SRAM1 (112 KB)	SRAM1 (112 KB)
0x1FFF 0000 - 0x1FFF 77FF	System memory	System memory	System memory	System memory
0x0810 0000 - 0x0FFF FFFF	Reserved	Reserved	Reserved	Reserved
0x0800 0000 - 0x081F FFFF	Flash memory	Flash memory	Flash memory	Flash memory

Table 4. Memory mapping vs. Boot mode/physical remap in STM32F42xxx and STM32F43xxx (continued)

Addresses	Boot/Remap in main Flash memory	Boot/Remap in embedded SRAM	Boot/Remap in System memory	Remap in FMC
0x0400 0000 - 0x07FF FFFF	Reserved	Reserved	Reserved	FMC bank 1 NOR/PSRAM 2 (128 MB Aliased)
0x0000 0000 - 0x001F FFFF(1)(2)	Flash (2 MB) Aliased	SRAM1 (112 KB) Aliased	System memory (30 KB) Aliased	FMC bank 1 NOR/PSRAM 1 (128 MB Aliased) or FMC SDRAM bank 1 (128 MB Aliased)

1. When the FMC is remapped at address 0x0000 0000, only the first two regions of bank 1 memory controller (bank 1 NOR/PSRAM 1 and NOR/PSRAM 2) or SDRAM bank 1 can be remapped. In remap mode, the CPU can access the external memory via ICode bus instead of System bus which boosts up the performance.
2. Even when aliased in the boot memory space, the related memory is still accessible at its original memory space.

3 Embedded Flash memory interface

3.1 Introduction

The Flash memory interface manages CPU AHB I-Code and D-Code accesses to the Flash memory. It implements the erase and program Flash memory operations and the read and write protection mechanisms.

The Flash memory interface accelerates code execution with a system of instruction prefetch and cache lines.

3.2 Main features

- Flash memory read operations
- Flash memory program/erase operations
- Read / write protections
- Prefetch on I-Code
- 64 cache lines of 128 bits on I-Code
- 8 cache lines of 128 bits on D-Code

Figure 3 shows the Flash memory interface connection inside the system architecture.

Figure 3. Flash memory interface connection inside system architecture (STM32F405xx/07xx and STM32F415xx/17xx)

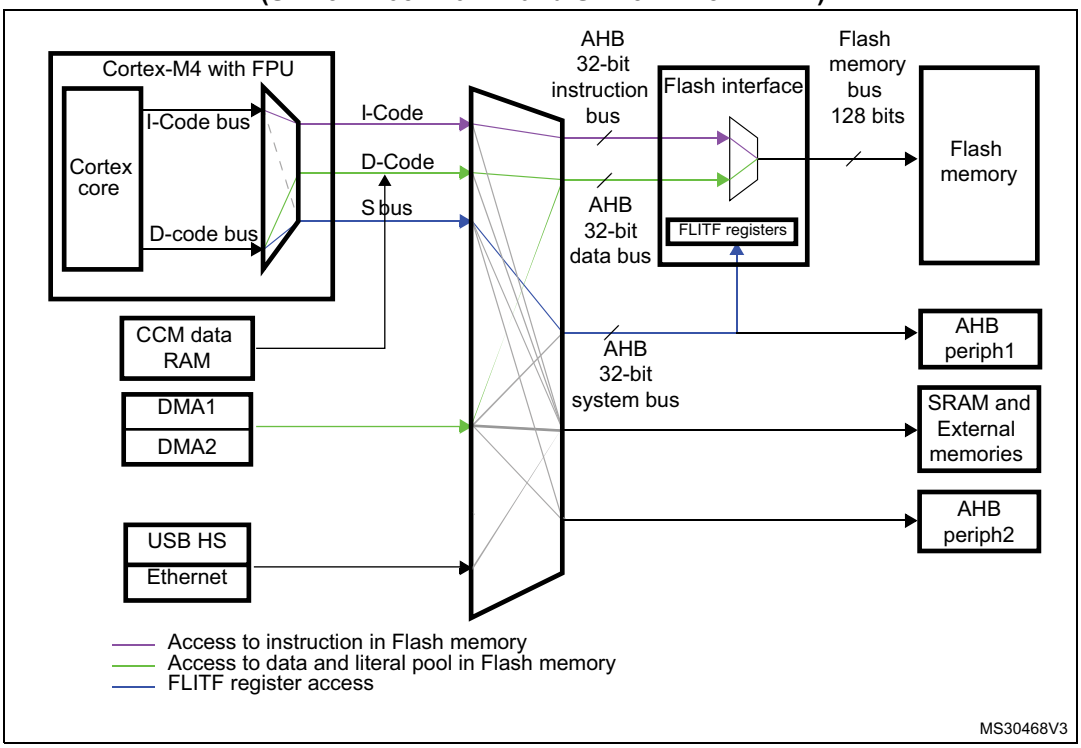

Figure 4. Flash memory interface connection inside system architecture (STM32F42xxx and STM32F43xxx)

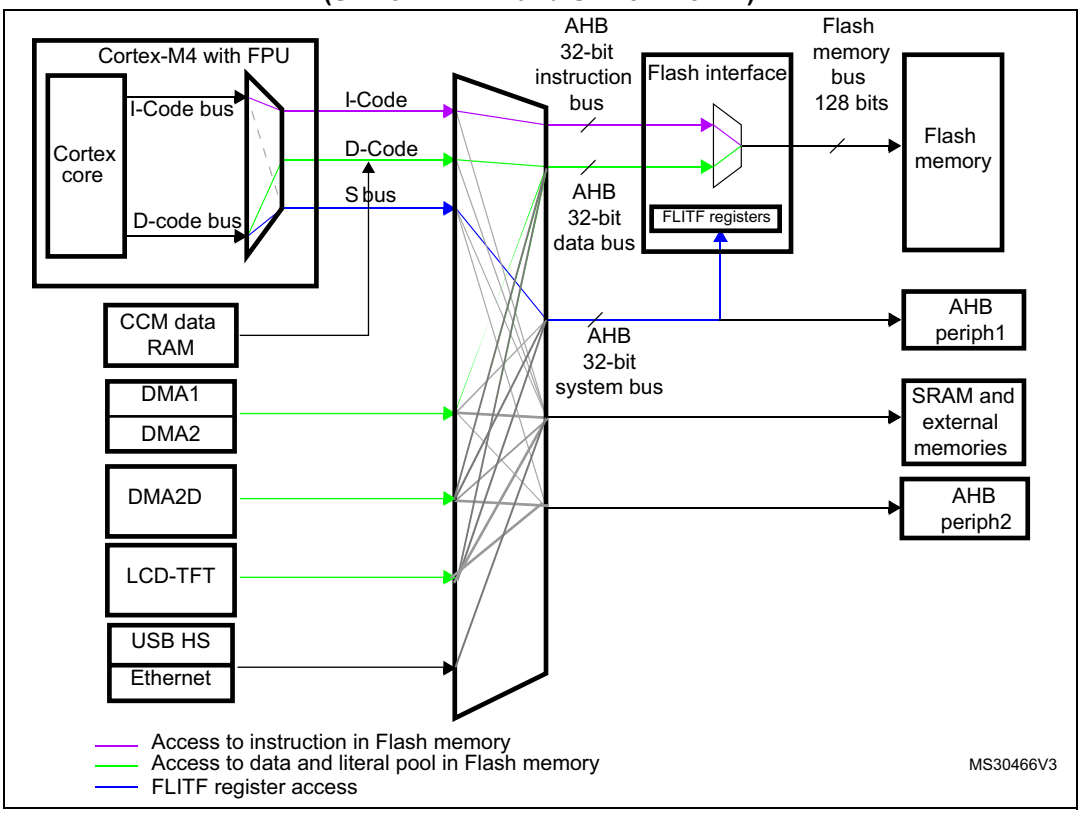

3.3 Embedded Flash memory in STM32F405xx/07xx and STM32F415xx/17xx

The Flash memory has the following main features:

- Capacity up to 1 Mbyte
- 128 bits wide data read
- Byte, half-word, word and double word write
- Sector and mass erase
- Memory organization

  The Flash memory is organized as follows:

  – A main memory block divided into 4 sectors of 16 Kbytes, 1 sector of 64 Kbytes, and 7 sectors of 128 Kbytes

  – System memory from which the device boots in System memory boot mode

  – 512 OTP (one-time programmable) bytes for user data

  The OTP area contains 16 additional bytes used to lock the corresponding OTP data block.

  – Option bytes to configure read and write protection, BOR level, watchdog software/hardware and reset when the device is in Standby or Stop mode.
- Low-power modes (for details refer to the Power control (PWR) section of the reference manual)

Table 5. Flash module organization (STM32F40x and STM32F41x)

Block	Name	Block base addresses	Size
Main memory	Sector 0	0x0800 0000 - 0x0800 3FFF	16 Kbytes
	Sector 1	0x0800 4000 - 0x0800 7FFF	16 Kbytes
	Sector 2	0x0800 8000 - 0x0800 BFFF	16 Kbytes
	Sector 3	0x0800 C000 - 0x0800 FFFF	16 Kbytes
	Sector 4	0x0801 0000 - 0x0801 FFFF	64 Kbytes
	Sector 5	0x0802 0000 - 0x0803 FFFF	128 Kbytes
	Sector 6	0x0804 0000 - 0x0805 FFFF	128 Kbytes
	. . .	. . .	. . .
	Sector 11	0x080E 0000 - 0x080F FFFF	128 Kbytes
System memory		0x1FFF 0000 - 0x1FFF 77FF	30 Kbytes
OTP area		0x1FFF 7800 - 0x1FFF 7A0F	528 bytes
Option bytes		0x1FFF C000 - 0x1FFF C00F	16 bytes

3.4 Embedded Flash memory in STM32F42xxx and STM32F43xxx

The Flash memory has the following main features:

- Capacity up to 2 Mbyte with dual bank architecture supporting read-while-write capability (RWW)
- 128 bits wide data read
- Byte, half-word, word and double word write
- Sector, bank, and mass erase (both banks)
- Dual bank memory organization

  The Flash memory is organized as follows:

  – For each bank, a main memory block (1 Mbyte) divided into 4 sectors of 16 Kbytes, 1 sector of 64 Kbytes, and 7 sectors of 128 Kbytes

  – System memory from which the device boots in System memory boot mode

  – 512 OTP (one-time programmable) bytes for user data

  The OTP area contains 16 additional bytes used to lock the corresponding OTP data block.

  – Option bytes to configure read and write protection, BOR level, watchdog, dual bank boot mode, dual bank feature, software/hardware and reset when the device is in Standby or Stop mode.
- Dual bank organization on 1 Mbyte devices

  The dual bank feature on 1 Mbyte devices is enabled by setting the DB1M option bit.

  To obtain a dual bank Flash memory, the last 512 Kbytes of the single bank (sectors [8:11]) are re-structured in the same way as the first 512 Kbytes.

  The sector numbering of dual bank memory organization is different from the single bank: the single bank memory contains 12 sectors whereas the dual bank memory contains 16 sectors (see *Table 7: 1 Mbyte Flash memory single bank vs dual bank organization (STM32F42xxx and STM32F43xxx)*).

  For erase operation, the right sector numbering must be considered according the DB1M option bit.

  – When the DB1M bit is reset, the erase operation must be performed on the default sector number.

  – When the DB1M bit is set, to perform an erase operation on bank 2, the sector number must be programmed (sector number from 12 to 19). Refer to FLASH_CR register for SNB (Sector number) configuration.

Refer to *Table 8: 1 Mbyte single bank Flash memory organization (STM32F42xxx and STM32F43xxx)* and *Table 9: 1 Mbyte dual bank Flash memory organization (STM32F42xxx and STM32F43xxx)* for details on 1 Mbyte single bank and 1 Mbyte dual bank organizations.

Table 6. Flash module - 2 Mbyte dual bank organization (STM32F42xxx and STM32F43xxx)

Block	Bank	Name	Block base addresses	Size
Main memory	Bank 1	Sector 0	0x0800 0000 - 0x0800 3FFF	16 Kbytes
		Sector 1	0x0800 4000 - 0x0800 7FFF	16 Kbytes
		Sector 2	0x0800 8000 - 0x0800 BFFF	16 Kbytes
		Sector 3	0x0800 C000 - 0x0800 FFFF	16 Kbyte
		Sector 4	0x0801 0000 - 0x0801 FFFF	64 Kbytes
		Sector 5	0x0802 0000 - 0x0803 FFFF	128 Kbytes
		Sector 6	0x0804 0000 - 0x0805 FFFF	128 Kbytes
		-	-	-
		-	-	-
		-	-	-
		Sector 11	0x080E 0000 - 0x080F FFFF	128 Kbytes
	Bank 2	Sector 12	0x0810 0000 - 0x0810 3FFF	16 Kbytes
		Sector 13	0x0810 4000 - 0x0810 7FFF	16 Kbytes
		Sector 14	0x0810 8000 - 0x0810 BFFF	16 Kbytes
		Sector 15	0x0810 C000 - 0x0810 FFFF	16 Kbytes
		Sector 16	0x0811 0000 - 0x0811 FFFF	64 Kbytes
		Sector 17	0x0812 0000 - 0x0813 FFFF	128 Kbytes
		Sector 18	0x0814 0000 - 0x0815 FFFF	128 Kbytes
			-	-
			-	-
			-	-
		Sector 23	0x081E 0000 - 0x081F FFFF	128 Kbytes
System memory			0x1FFF 0000 - 0x1FFF 77FF	30 Kbytes
OTP			0x1FFF 7800 - 0x1FFF 7A0F	528 bytes
Option bytes	Bank 1		0x1FFF C000 - 0x1FFF C00F	16 bytes
	Bank 2		0x1FFE C000 - 0x1FFE C00F	16 bytes

Table 7. 1 Mbyte Flash memory single bank vs dual bank organization (STM32F42xxx and STM32F43xxx)

1 Mbyte single bank Flash memory (default)			1 Mbyte dual bank Flash memory		
DB1M=0			DB1M=1		
Main memory	Sector number	Sector size	Main memory	Sector number	Sector size
1MB	Sector 0	16 Kbytes	Bank 1 512KB	Sector 0	16 Kbytes
	Sector 1	16 Kbytes		Sector 1	16 Kbytes
	Sector 2	16 Kbytes		Sector 2	16 Kbytes
	Sector 3	16 Kbytes		Sector 3	16 Kbytes
	Sector 4	64 Kbytes		Sector 4	64 Kbytes
	Sector 5	128 Kbytes		Sector 5	128 Kbytes
	Sector 6	128 Kbytes		Sector 6	128 Kbytes
	Sector 7	128 Kbytes		Sector 7	128 Kbytes
	Sector 8	128 Kbytes	Bank 2 512KB	Sector 12	16 Kbytes
	Sector 9	128 Kbytes		Sector 13	16 Kbytes
	Sector 10	128 Kbytes		Sector 14	16 Kbytes
	Sector 11	128 Kbytes		Sector 15	16 Kbytes
	-	-		Sector 16	64 Kbytes
	-	-		Sector 17	128 Kbytes
	-	-		Sector 18	128 Kbytes
	-	-		Sector 19	128 Kbytes

Table 8. 1 Mbyte single bank Flash memory organization (STM32F42xxx and STM32F43xxx)

Block	Bank	Name	Block base addresses	Size
Main memory	Single bank	Sector 0	0x0800 0000 - 0x0800 3FFF	16 Kbytes
		Sector 1	0x0800 4000 - 0x0800 7FFF	16 Kbytes
		Sector 2	0x0800 8000 - 0x0800 BFFF	16 Kbytes
		Sector 3	0x0800 C000 - 0x0800 FFFF	16 Kbytes
		Sector 4	0x0801 0000 - 0x0801 FFFF	64 Kbytes
		Sector 5	0x0802 0000 - 0x0803 FFFF	128 Kbytes
		Sector 6	0x0804 0000 - 0x0805 FFFF	128 Kbytes
		Sector 7	0x0806 0000 - 0x0807 FFFF	128 Kbytes
		Sector 8	0x0808 0000 - 0x0809 FFFF	128 Kbytes
		Sector 9	0x080A 0000 - 0x080B FFFF	128 Kbytes
		Sector 10	0x080C 0000 - 0x080D FFFF	128 Kbytes
		Sector 11	0x080E 0000 - 0x080F FFFF	128 Kbytes

Table 8. 1 Mbyte single bank Flash memory organization (STM32F42xxx and STM32F43xxx) (continued)

Block	Bank	Name	Block base addresses	Size
System memory			0x1FFF 0000 - 0x1FFFF 77FF	30 Kbytes
OTP			0x1FFF 7800 - 0x1FFF 7A0F	528 bytes
Option bytes			0x1FFF C000 - 0x1FFF C00F	16 bytes
			0x1FFE C000 - 0x1FFE C00F	16 bytes

Table 9. 1 Mbyte dual bank Flash memory organization (STM32F42xxx and STM32F43xxx)

Block		Name	Block base addresses	Size
Main memory	Bank 1	Sector 0	0x0800 0000 - 0x0800 3FFF	16 Kbytes
		Sector 1	0x0800 4000 - 0x0800 7FFF	16 Kbytes
		Sector 2	0x0800 8000 - 0x0800 BFFF	16 Kbytes
		Sector 3	0x0800 C000 - 0x0800 FFFF	16 Kbyte
		Sector 4	0x0801 0000 - 0x0801 FFFF	64 Kbytes
		Sector 5	0x0802 0000 - 0x0803 FFFF	128 Kbytes
		Sector 6	0x0804 0000 - 0x0805 FFFF	128 Kbytes
		Sector 7	0x0806 0000 - 0x0807 FFFF	128 Kbytes
	Bank 2	Sector 12	0x0808 0000 - 0x0808 3FFF	16 Kbytes
		Sector 13	0x0808 4000 - 0x0808 7FFF	16 Kbytes
		Sector 14	0x0808 0000 - 0x0808 BFFF	16 Kbytes
		Sector 15	0x0808 C000 - 0x0808 FFFF	16 Kbytes
		Sector 16	0x0809 0000 - 0x0809 FFFF	64 Kbytes
		Sector 17	0x080A 0000 - 0x080B FFFF	128 Kbytes
		Sector 18	0x080C 0000 - 0x080D FFFF	128 Kbytes
		Sector 19	0x080E 0000 - 0x080F FFFF	128 Kbytes
System memory			0x1FFF 0000 - 0x1FFF 77FF	30 Kbytes
OTP			0x1FFF 7800 - 0x1FFF 7A0F	528 bytes
Option bytes	Bank 1		0x1FFF C000 - 0x1FFF C00F	16 bytes
	Bank 2		0x1FFE C000 - 0x1FFE C00F	16 bytes

3.5 Read interface

3.5.1 Relation between CPU clock frequency and Flash memory read time

To correctly read data from Flash memory, the number of wait states (LATENCY) must be correctly programmed in the Flash access control register (FLASH_ACR) according to the frequency of the CPU clock (HCLK) and the supply voltage of the device.

The prefetch buffer must be disabled when the supply voltage is below 2.1 V. The correspondence between wait states and CPU clock frequency is given in *Table 10* and *Table 11*.

Note: On STM32F405xx/07xx and STM32F415xx/17xx devices:

- when VOS = '0', the maximum value of f_{HCLK} = 144 MHz.

- when VOS = '1', the maximum value of f_{HCLK} = 168 MHz.

On STM32F42xxx and STM32F43xxx devices:

- when VOS[1:0] = '0x01', the maximum value of f_{HCLK} is 120 MHz.

- when VOS[1:0] = '0x10', the maximum value of f_{HCLK} is 144 MHz. It can be extended to 168 MHz by activating the over-drive mode.

- when VOS[1:0] = '0x11, the maximum value of f_{HCLK} is 168 MHz. It can be extended to 180 MHz by activating the over-drive mode.

- The over-drive mode is not available when V_{DD} ranges from 1.8 to 2.1 V.

Refer to Section 5.1.4: Voltage regulator for STM32F42xxx and STM32F43xxx for details on how to activate the over-drive mode.

Table 10. Number of wait states according to CPU clock (HCLK) frequency (STM32F405xx/07xx and STM32F415xx/17xx)

Wait states (WS) (LATENCY)	HCLK (MHz)			
	Voltage range 2.7 V - 3.6 V	Voltage range 2.4 V - 2.7 V	Voltage range 2.1 V - 2.4 V	Voltage range 1.8 V - 2.1 V Prefetch OFF
0 WS (1 CPU cycle)	0 < HCLK ≤30	0 < HCLK ≤24	0 < HCLK ≤22	0 < HCLK ≤20
1 WS (2 CPU cycles)	30 < HCLK ≤60	24 < HCLK ≤48	22 < HCLK ≤44	20 <HCLK ≤40
2 WS (3 CPU cycles)	60 < HCLK ≤90	48 < HCLK ≤72	44 < HCLK ≤66	40 < HCLK ≤60
3 WS (4 CPU cycles)	90 < HCLK ≤120	72 < HCLK ≤96	66 < HCLK ≤88	60 < HCLK ≤80
4 WS (5 CPU cycles)	120 < HCLK ≤150	96 < HCLK ≤120	88 < HCLK ≤110	80 < HCLK ≤100
5 WS (6 CPU cycles)	150 < HCLK ≤168	120 < HCLK ≤144	110 < HCLK ≤132	100 < HCLK ≤120
6 WS (7 CPU cycles)		144 < HCLK ≤168	132 < HCLK ≤154	120 < HCLK ≤140
7 WS (8 CPU cycles)			154 < HCLK ≤168	140 < HCLK ≤160

Table 11. Number of wait states according to CPU clock (HCLK) frequency (STM32F42xxx and STM32F43xxx)

Wait states (WS) (LATENCY)	HCLK (MHz)			
	Voltage range 2.7 V - 3.6 V	Voltage range 2.4 V - 2.7 V	Voltage range 2.1 V - 2.4 V	Voltage range 1.8 V - 2.1 V Prefetch OFF
0 WS (1 CPU cycle)	0 <HCLK ≤30	0 <HCLK ≤24	0 <HCLK ≤22	0 < HCLK ≤20
1 WS (2 CPU cycles)	30 <HCLK ≤60	24 < HCLK ≤48	22 <HCLK ≤44	20 <HCLK ≤40
2 WS (3 CPU cycles)	60 <HCLK ≤90	48 < HCLK ≤72	44 < HCLK ≤66	40 < HCLK ≤60
3 WS (4 CPU cycles)	90 <HCLK ≤120	72 < HCLK ≤96	66 <HCLK ≤88	60 < HCLK ≤80
4 WS (5 CPU cycles)	120 <HCLK ≤150	96 < HCLK ≤120	88 < HCLK ≤110	80 < HCLK ≤100
5 WS (6 CPU cycles)	150 <HCLK ≤180	120 <HCLK ≤144	110 < HCLK ≤132	100 < HCLK ≤120
6 WS (7 CPU cycles)		144 <HCLK ≤168	132 < HCLK ≤154	120 < HCLK ≤140
7 WS (8 CPU cycles)		168 <HCLK ≤180	154 <HCLK ≤176	140 < HCLK ≤160
8 WS (9 CPU cycles)			176 <HCLK ≤180	160 < HCLK ≤168

After reset, the CPU clock frequency is 16 MHz and 0 wait state (WS) is configured in the FLASH_ACR register.

It is highly recommended to use the following software sequences to tune the number of wait states needed to access the Flash memory with the CPU frequency.

Increasing the CPU frequency

1. Program the new number of wait states to the LATENCY bits in the FLASH_ACR register
2. Check that the new number of wait states is taken into account to access the Flash memory by reading the FLASH_ACR register
3. Modify the CPU clock source by writing the SW bits in the RCC_CFGR register
4. If needed, modify the CPU clock prescaler by writing the HPRE bits in RCC_CFGR
5. Check that the new CPU clock source or/and the new CPU clock prescaler value is/are taken into account by reading the clock source status (SWS bits) or/and the AHB prescaler value (HPRE bits), respectively, in the RCC_CFGR register.

Decreasing the CPU frequency

1. Modify the CPU clock source by writing the SW bits in the RCC_CFGR register
2. If needed, modify the CPU clock prescaler by writing the HPRE bits in RCC_CFGR
3. Check that the new CPU clock source or/and the new CPU clock prescaler value is/are taken into account by reading the clock source status (SWS bits) or/and the AHB prescaler value (HPRE bits), respectively, in the RCC_CFGR register
4. Program the new number of wait states to the LATENCY bits in FLASH_ACR
5. Check that the new number of wait states is used to access the Flash memory by reading the FLASH_ACR register

Note: A change in CPU clock configuration or wait state (WS) configuration may not be effective straight away. To make sure that the current CPU clock frequency is the one you have configured, you can check the AHB prescaler factor and clock source status values. To make sure that the number of WS you have programmed is effective, you can read the FLASH_ACR register.

3.5.2 Adaptive real-time memory accelerator (ART Accelerator™)

The proprietary Adaptive real-time (ART) memory accelerator is optimized for STM32 industry-standard Arm® Cortex®-M4 with FPU processors. It balances the inherent performance advantage of the Arm® Cortex®-M4 with FPU over Flash memory technologies, which normally requires the processor to wait for the Flash memory at higher operating frequencies.

To release the processor full performance, the accelerator implements an instruction prefetch queue and branch cache which increases program execution speed from the 128-bit Flash memory. Based on CoreMark benchmark, the performance achieved thanks to the ART accelerator is equivalent to 0 wait state program execution from Flash memory at a CPU frequency up to 180 MHz.

Instruction prefetch

Each Flash memory read operation provides 128 bits from either four instructions of 32 bits or 8 instructions of 16 bits according to the program launched. So, in case of sequential code, at least four CPU cycles are needed to execute the previous read instruction line. Prefetch on the I-Code bus can be used to read the next sequential instruction line from the Flash memory while the current instruction line is being requested by the CPU. Prefetch is enabled by setting the PRFTEN bit in the FLASH_ACR register. This feature is useful if at least one wait state is needed to access the Flash memory.

Figure 5 shows the execution of sequential 32-bit instructions with and without prefetch when 3 WSs are needed to access the Flash memory.

Figure 5. Sequential 32-bit instruction execution

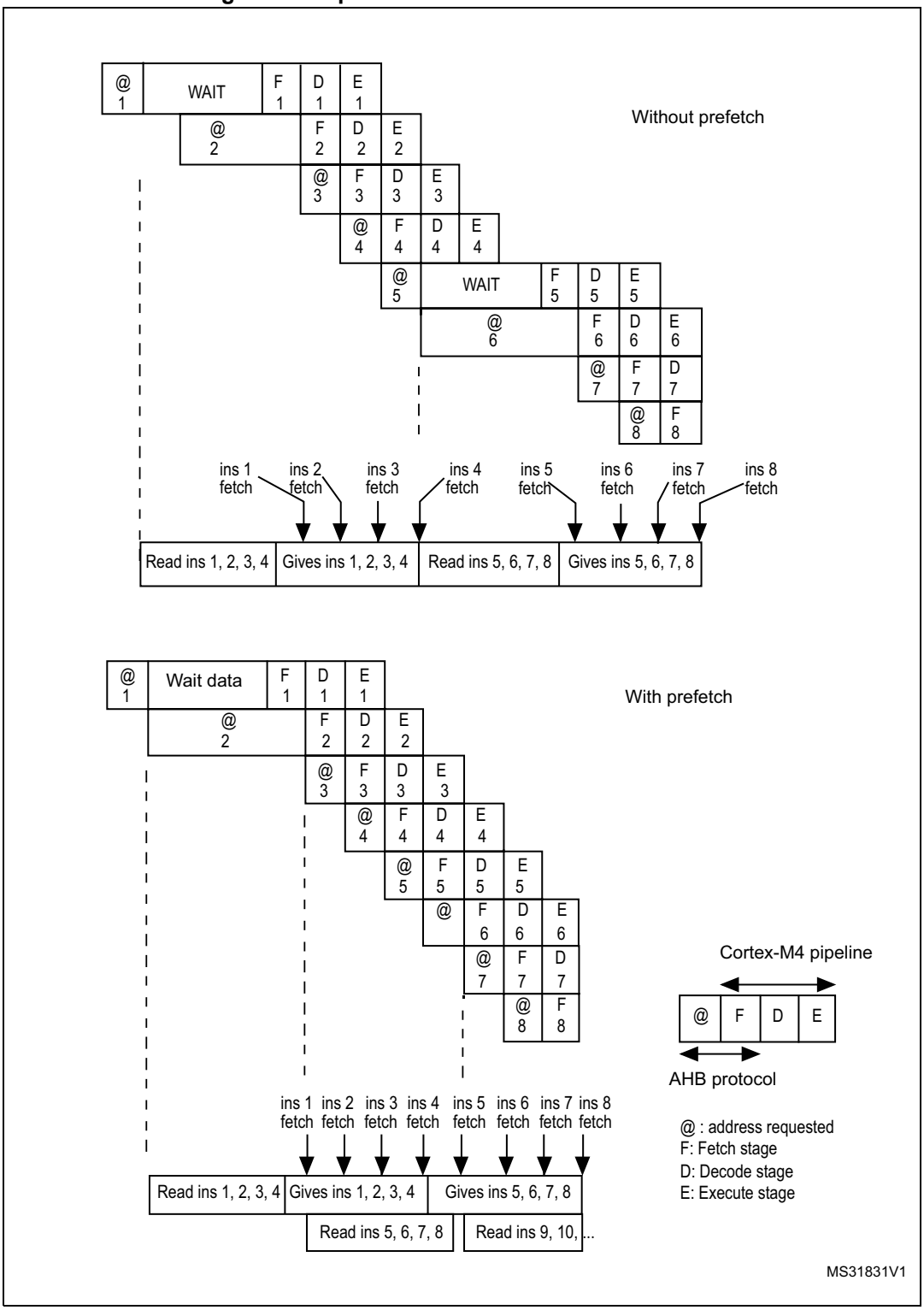

When the code is not sequential (branch), the instruction may not be present in the currently used instruction line or in the prefetched instruction line. In this case (miss), the penalty in terms of number of cycles is at least equal to the number of wait states.

Instruction cache memory

To limit the time lost due to jumps, it is possible to retain 64 lines of 128 bits in an instruction cache memory. This feature can be enabled by setting the instruction cache enable (ICEN) bit in the FLASH_ACR register. Each time a miss occurs (requested data not present in the currently used instruction line, in the prefetched instruction line or in the instruction cache memory), the line read is copied into the instruction cache memory. If some data contained in the instruction cache memory are requested by the CPU, they are provided without inserting any delay. Once all the instruction cache memory lines have been filled, the LRU (least recently used) policy is used to determine the line to replace in the instruction memory cache. This feature is particularly useful in case of code containing loops.

Data management

Literal pools are fetched from Flash memory through the D-Code bus during the execution stage of the CPU pipeline. The CPU pipeline is consequently stalled until the requested literal pool is provided. To limit the time lost due to literal pools, accesses through the AHB databus D-Code have priority over accesses through the AHB instruction bus I-Code.

If some literal pools are frequently used, the data cache memory can be enabled by setting the data cache enable (DCEN) bit in the FLASH_ACR register. This feature works like the instruction cache memory, but the retained data size is limited to 8 rows of 128 bits.

Note: Data in user configuration sector are not cacheable.

3.6 Erase and program operations

For any Flash memory program operation (erase or program), the CPU clock frequency (HCLK) must be at least 1 MHz. The contents of the Flash memory are not guaranteed if a device reset occurs during a Flash memory operation.

Any attempt to read the Flash memory on STM32F4xx while it is being written or erased, causes the bus to stall. Read operations are processed correctly once the program operation has completed. This means that code or data fetches cannot be performed while a write/erase operation is ongoing.

On STM32F42xxx and STM32F43xxx devices, two banks are available allowing read operation from one bank while a write/erase operation is performed to the other bank.

3.6.1 Unlocking the Flash control register

After reset, write is not allowed in the Flash control register (FLASH_CR) to protect the Flash memory against possible unwanted operations due, for example, to electric disturbances. The following sequence is used to unlock this register:

1. Write KEY1 = 0x45670123 in the Flash key register (FLASH_KEYR)
2. Write KEY2 = 0xCDEF89AB in the Flash key register (FLASH_KEYR)

Any wrong sequence will return a bus error and lock up the FLASH_CR register until the next reset.

The FLASH_CR register can be locked again by software by setting the LOCK bit in the FLASH_CR register.

Note: The FLASH_CR register is not accessible in write mode when the BSY bit in the FLASH_SR register is set. Any attempt to write to it with the BSY bit set will cause the AHB bus to stall until the BSY bit is cleared.

3.6.2 Program/erase parallelism

The Parallelism size is configured through the PSIZE field in the FLASH_CR register. It represents the number of bytes to be programmed each time a write operation occurs to the Flash memory. PSIZE is limited by the supply voltage and by whether the external V_{PP} supply is used or not. It must therefore be correctly configured in the FLASH_CR register before any programming/erasing operation.

A Flash memory erase operation can only be performed by sector, bank or for the whole Flash memory (mass erase). The erase time depends on PSIZE programmed value. For more details on the erase time, refer to the electrical characteristics section of the device datasheet.

Table 12 provides the correct PSIZE values.

Table 12. Program/erase parallelism

	Voltage range 2.7 - 3.6 V with External V_{PP}	Voltage range 2.7 - 3.6 V	Voltage range 2.4 - 2.7 V	Voltage range 2.1 - 2.4 V	Voltage range 1.8 V - 2.1 V
Parallelism size	x64	x32	x16		x8
PSIZE(1:0)	11	10	01		00

Note: Any program or erase operation started with inconsistent program parallelism/voltage range settings may lead to unpredicted results. Even if a subsequent read operation indicates that the logical value was effectively written to the memory, this value may not be retained.

To use V_{PP}, an external high-voltage supply (between 8 and 9 V) must be applied to the V_{PP} pad. The external supply must be able to sustain this voltage range even if the DC consumption exceeds 10 mA. It is advised to limit the use of VPP to initial programming on the factory line. The V_{PP} supply must not be applied for more than an hour, otherwise the Flash memory might be damaged.

3.6.3 Erase

The Flash memory erase operation can be performed at sector level or on the whole Flash memory (Mass Erase). Mass Erase does not affect the OTP sector or the configuration sector.

Sector Erase

To erase a sector, follow the procedure below:

1. Check that no Flash memory operation is ongoing by checking the BSY bit in the FLASH_SR register
2. Set the SER bit and select the sector out of the 12 sectors (for STM32F405xx/07xx and STM32F415xx/17xx) and out of 24 (for STM32F42xxx and STM32F43xxx) in the main memory block you wish to erase (SNB) in the FLASH_CR register
3. Set the STRT bit in the FLASH_CR register
4. Wait for the BSY bit to be cleared

Bank erase in STM32F42xxx and STM32F43xxx devices

To erase bank 1 or bank 2, follow the procedure below:

1. Check that no Flash memory operation is ongoing by checking the BSY bit in the FLASH_SR register
2. Set MER or MER1 bit accordingly in the FLASH_CR register
3. Set the STRT bit in the FLASH_CR register
4. Wait for the BSY bit to be reset.

Mass Erase

To perform Mass Erase, the following sequence is recommended:

1. Check that no Flash memory operation is ongoing by checking the BSY bit in the FLASH_SR register
2. Set the MER bit in the FLASH_CR register (on STM32F405xx/07xx and STM32F415xx/17xx devices)
3. Set both the MER and MER1 bits in the FLASH_CR register (on STM32F42xxx and STM32F43xxx devices).
4. Set the STRT bit in the FLASH_CR register
5. Wait for the BSY bit to be cleared

Note: If MERx and SER bits are both set in the FLASH_CR register, mass erase is performed.

If both MERx and SER bits are reset and the STRT bit is set, an unpredictable behavior may occur without generating any error flag. This condition should be forbidden.

3.6.4 Programming

Standard programming

The Flash memory programming sequence is as follows:

1. Check that no main Flash memory operation is ongoing by checking the BSY bit in the FLASH_SR register.
2. Set the PG bit in the FLASH_CR register
3. Perform the data write operation(s) to the desired memory address (inside main memory block or OTP area):
   - Byte access in case of x8 parallelism
   - Half-word access in case of x16 parallelism
   - Word access in case of x32 parallelism
   - Double word access in case of x64 parallelism
4. Wait for the BSY bit to be cleared.

Note: Successive write operations are possible without the need of an erase operation when changing bits from ‘1’ to ‘0’. Writing ‘1’ requires a Flash memory erase operation.

If an erase and a program operation are requested simultaneously, the erase operation is performed first.

Programming errors

It is not allowed to program data to the Flash memory that would cross the 128-bit row boundary. In such a case, the write operation is not performed and a program alignment error flag (PGAERR) is set in the FLASH_SR register.

The write access type (byte, half-word, word or double word) must correspond to the type of parallelism chosen (x8, x16, x32 or x64). If not, the write operation is not performed and a program parallelism error flag (PGPERR) is set in the FLASH_SR register.

If the standard programming sequence is not respected (for example, if there is an attempt to write to a Flash memory address when the PG bit is not set), the operation is aborted and a program sequence error flag (PGSERR) is set in the FLASH_SR register.

Programming and caches

If a Flash memory write access concerns some data in the data cache, the Flash write access modifies the data in the Flash memory and the data in the cache.

If an erase operation in Flash memory also concerns data in the data or instruction cache, you have to make sure that these data are rewritten before they are accessed during code execution. If this cannot be done safely, it is recommended to flush the caches by setting the DCRST and ICRST bits in the FLASH_CR register.

Note: The I/D cache should be flushed only when it is disabled (I/DCEN = 0).

3.6.5 Read-while-write (RWW)

In STM32F42xxx and STM32F43xxx devices, the Flash memory is divided into two banks allowing read-while-write operations. This feature allows to perform a read operation from one bank while an erase or program operation is performed to the other bank.

Note: Write-while-write operations are not allowed. As an exampled, It is not possible to perform an erase operation on one bank while programming the other one.

Read from bank 1 while erasing bank 2

While executing a program code from bank 1, it is possible to perform an erase operation on bank 2 (and vice versa). Follow the procedure below:

1. Check that no Flash memory operation is ongoing by checking the BSY bit in the FLASH_SR register (BSY is active when erase/program operation is on going to bank 1 or bank 2)
2. Set MER or MER1 bit in the FLASH_CR register
3. Set the STRT bit in the FLASH_CR register
4. Wait for the BSY bit to be reset (or use the EOP interrupt).

Read from bank 1 while programming bank 2

While executing a program code (over the I-Code bus) from bank 1,it is possible to perform an program operation to the bank 2 (and vice versa). Follow the procedure below:

1. Check that no Flash memory operation is ongoing by checking the BSY bit in the FLASH_SR register (BSY is active when erase/program operation is on going on bank 1 or bank 2)
2. Set the PG bit in the FLASH_CR register
3. Perform the data write operation(s) to the desired memory address inside main memory block or OTP area
4. Wait for the BSY bit to be reset.

3.6.6 Interrupts

Setting the end of operation interrupt enable bit (EOPIE) in the FLASH_CR register enables interrupt generation when an erase or program operation ends, that is when the busy bit (BSY) in the FLASH_SR register is cleared (operation completed, correctly or not). In this case, the end of operation (EOP) bit in the FLASH_SR register is set.

If an error occurs during a program, an erase, or a read operation request, one of the following error flags is set in the FLASH_SR register:

- PGAERR, PGPERR, PGSERR (Program error flags)
- WRPERR (Protection error flag)
- RDERR (Read protection error flag) for STM32F42xxx and STM32F43xxx devices only.

In this case, if the error interrupt enable bit (ERRIE) is set in the FLASH_CR register, an interrupt is generated and the operation error bit (OPERR) is set in the FLASH_SR register.

Note: If several successive errors are detected (for example, in case of DMA transfer to the Flash memory), the error flags cannot be cleared until the end of the successive write requests.

Table 13. Flash interrupt request

Interrupt event	Event flag	Enable control bit
End of operation	EOP	EOPIE
Write protection error	WRPERR	ERRIE
Programming error	PGAERR, PGPERR, PGSERR	ERRIE
Read protection error	RDERR	ERRIE

3.7 Option bytes

3.7.1 Description of user option bytes

The option bytes are configured by the end user depending on the application requirements. *Table 14* shows the organization of these bytes inside the user configuration sector.

Table 14. Option byte organization

Address	[63:16]	[15:0]
0x1FFF C000	Reserved	ROP & user option bytes (**RDP** & **USER**)
0x1FFF C008	Reserved	SPRMOD and Write protection **nWRP bits for sectors 0 to 11**

Table 14. Option byte organization (continued)

Address	[63:16]	[15:0]
0x1FFE C000	Reserved	Reserved
0x1FFE C008	Reserved	SPRMOD and Write protection **nWRP bits for sectors 12 to 23**

Table 15. Description of the option bytes (STM32F405xx/07xx and STM32F415xx/17xx)

Option bytes (word, address 0x1FFF C000)	
RDP: *Read protection option byte.* The read protection is used to protect the software code stored in Flash memory.	
Bits 15:8	0xAA: Level 0, no protection 0xCC: Level 2, chip protection (debug and boot from RAM features disabled) Others: Level 1, read protection of memories (debug features limited)
USER: User option byte This byte is used to configure the following features: – Select the watchdog event: Hardware or software – Reset event when entering the Stop mode – Reset event when entering the Standby mode	
Bit 7	**nRST_STDBY** 0: Reset generated when entering the Standby mode 1: No reset generated
Bit 6	**nRST_STOP** 0: Reset generated when entering the Stop mode 1: No reset generated
Bit 5	**WDG_SW** 0: Hardware independent watchdog 1: Software independent watchdog
Bit 4	0x1: Not used
Bits 3:2	**BOR_LEV:** BOR reset Level These bits contain the supply level threshold that activates/releases the reset. They can be written to program a new BOR level value into Flash memory. 00: BOR Level 3 (VBOR3), brownout threshold level 3 01: BOR Level 2 (VBOR2), brownout threshold level 2 10: BOR Level 1 (VBOR1), brownout threshold level 1 11: BOR off, POR/PDR reset threshold level is applied *Note: For full details on BOR characteristics, refer to the "Electrical characteristics" section of the product datasheet.*
Bits 1:0	0x1: Not used

Table 15. Description of the option bytes (STM32F405xx/07xx and STM32F415xx/17xx) (continued)

Option bytes (word, address 0x1FFF C008)	
Bits 15:12	0xF: Not used
nWRP: *Flash memory write protection option bytes* Sectors 0 to 11 can be write protected.	
Bits 11:0	**nWRPi** 0: Write protection active on selected sector 1: Write protection not active on selected sector

Table 16. Description of the option bytes (STM32F42xxx and STM32F43xxx)

Option bytes (word, address 0x1FFF C000)	
RDP: *Read protection option byte.* The read protection is used to protect the software code stored in Flash memory.	
Bit 15:8	0xAA: Level 0, no protection 0xCC: Level 2, chip protection (debug and boot from RAM features disabled) Others: Level 1, read protection of memories (debug features limited)
USER: User option byte This byte is used to configure the following features: Select the watchdog event: Hardware or software Reset event when entering the Stop mode Reset event when entering the Standby mode	
Bit 7	**nRST_STDBY** 0: Reset generated when entering the Standby mode 1: No reset generated
Bit 6	**nRST_STOP** 0: Reset generated when entering the Stop mode 1: No reset generated
Bit 5	**WDG_SW** 0: Hardware independent watchdog 1: Software independent watchdog
Bit 4	**BFB2**: Dual bank boot 0: Boot from Flash memory bank 1 or system memory depending on boot pin state (Default). 1: Boot always from system memory (Dual bank boot mode).

Table 16. Description of the option bytes (STM32F42xxx and STM32F43xxx) (continued)

Bits 3:2	**BOR_LEV:** BOR reset Level These bits contain the supply level threshold that activates/releases the reset. They can be written to program a new BOR level value into Flash memory. 00: BOR Level 3 (VBOR3), brownout threshold level 3 01: BOR Level 2 (VBOR2), brownout threshold level 2 10: BOR Level 1 (VBOR1), brownout threshold level 1 11: BOR off, POR/PDR reset threshold level is applied *Note: For full details on BOR characteristics, refer to the "Electrical characteristics" section of the product datasheet.*
Bits 1:0	0x1: Not used
Option bytes (word, address 0x1FFF C008)	
Bit 15	**SPRMOD**: Selection of protection mode of nWPRi bits 0: nWPRi bits used for sector i write protection (Default) 1: nWPRi bits used for sector i PCROP protection (Sector)
Bit 14	**DB1M**: Dual bank 1 Mbyte Flash memory devices 0: 1 Mbyte single Flash memory (contiguous addresses in bank 1) 1: 1 Mbyte dual bank Flash memory. The Flash memory is organized as two banks of 512 Kbytes each (see *Table 7: 1 Mbyte Flash memory single bank vs dual bank organization (STM32F42xxx and STM32F43xxx)* and *Table 9: 1 Mbyte dual bank Flash memory organization (STM32F42xxx and STM32F43xxx)*). To perform an erase operation, the right sector must be programmed (see *Table 7* for information on the sector numbering scheme).
Bits 13:12	0x2: not used
nWRP: Flash memory write protection option bytes for bank 1. Sectors 0 to 11 can be write protected.	
Bits 11:0	**nWRPi:** If SPRMOD is reset (default value): 0: Write protection active on sector i. 1: Write protection not active on sector i. If SPRMOD is set (active): 0: PCROP protection not active on sector i. 1: PCROP protection active on sector i.
Option bytes (word, address 0x1FFE C000)	
Bit 15:0	0xFFFF: not used

Table 16. Description of the option bytes (STM32F42xxx and STM32F43xxx) (continued)

Option bytes (word, address 0x1FFE C008)	
Bit 15:12	0xF: not used
nWRP: Flash memory write protection option bytes for bank 2. Sectors 12 to 23 can be write protected.	
Bits 11: 0	nWRPi: If SPRMOD is reset (default value): 0: Write protection active on sector i. 1: Write protection not active on sector i. If SPRMOD is set (active): 0: PCROP protection not active on sector i. 1: PCROP protection active on sector i.

3.7.2 Programming user option bytes

To run any operation on this sector, the option lock bit (OPTLOCK) in the Flash option control register (FLASH_OPTCR) must be cleared. To be allowed to clear this bit, you have to perform the following sequence:

1. Write OPTKEY1 = 0x0819 2A3B in the Flash option key register (FLASH_OPTKEYR)
2. Write OPTKEY2 = 0x4C5D 6E7F in the Flash option key register (FLASH_OPTKEYR)

The user option bytes can be protected against unwanted erase/program operations by setting the OPTLOCK bit by software.

Modifying user option bytes on STM32F405xx/07xx and STM32F415xx/17xx

To modify the user option value, follow the sequence below:

1. Check that no Flash memory operation is ongoing by checking the BSY bit in the FLASH_SR register
2. Write the desired option value in the FLASH_OPTCR register.
3. Set the option start bit (OPTSTRT) in the FLASH_OPTCR register
4. Wait for the BSY bit to be cleared.

Note: The value of an option is automatically modified by first erasing the user configuration sector and then programming all the option bytes with the values contained in the FLASH_OPTCR register.

Modifying user option bytes on STM32F42xxx and STM32F43xxx

The user option bytes for bank 1 and bank 2 cannot be modified independently. They must be updated concurrently.

To modify the user option byte value, follow the sequence below:

1. Check that no Flash memory operation is ongoing by checking the BSY bit in the FLASH_SR register
2. Write the bank 2 option byte value in the FLASH_OPTCR1 register
3. Write the bank 1 option byte value in the FLASH_OPTCR register.
4. Set the option start bit (OPTSTRT) in the FLASH_OPTCR register
5. Wait for the BSY bit to be cleared

Note: The value of an option byte is automatically modified by first erasing the user configuration sector (bank 1 and 2) and then programming all the option bytes with the values contained in the FLASH_OPTCR and FLASH_OPTCR1 registers.

3.7.3 Read protection (RDP)

The user area in the Flash memory can be protected against read operations by an entrusted code. Three read protection levels are defined:

- Level 0: no read protection

  When the read protection level is set to Level 0 by writing 0xAA into the read protection option byte (RDP), all read/write operations (if no write protection is set) from/to the Flash memory or the backup SRAM are possible in all boot configurations (Flash user boot, debug or boot from RAM).

- Level 1: read protection enabled

  It is the default read protection level after option byte erase. The read protection Level 1 is activated by writing any value (except for 0xAA and 0xCC used to set Level 0 and Level 2, respectively) into the RDP option byte. When the read protection Level 1 is set:

  – No access (read, erase, program) to Flash memory or backup SRAM can be performed while the debug feature is connected or while booting from RAM or system memory bootloader. A bus error is generated in case of read request.

  – When booting from Flash memory, accesses (read, erase, program) to Flash memory and backup SRAM from user code are allowed.

  When Level 1 is active, programming the protection option byte (RDP) to Level 0 causes the Flash memory and the backup SRAM to be mass-erased. As a result the user code area is cleared before the read protection is removed. The mass erase only erases the user code area. The other option bytes including write protections remain unchanged from before the mass-erase operation. The OTP area is not affected by mass erase and remains unchanged. Mass erase is performed only when Level 1 is active and Level 0 requested. When the protection level is increased (0->1, 1->2, 0->2) there is no mass erase.

- Level 2: debug/chip read protection disabled

  The read protection Level 2 is activated by writing 0xCC to the RDP option byte. When the read protection Level 2 is set:

  – All protections provided by Level 1 are active.

  – Booting from RAM or system memory bootloader is no more allowed.

  – JTAG, SWV (single-wire viewer), ETM, and boundary scan are disabled.

  – User option bytes can no longer be changed.

  – When booting from Flash memory, accesses (read, erase and program) to Flash memory and backup SRAM from user code are allowed.

  Memory read protection Level 2 is an irreversible operation. When Level 2 is activated, the level of protection cannot be decreased to Level 0 or Level 1.

Note: The JTAG port is permanently disabled when Level 2 is active (acting as a JTAG fuse). As a consequence, boundary scan cannot be performed. STMicroelectronics is not able to perform analysis on defective parts on which the Level 2 protection has been set.

Table 17. Access versus read protection level

Memory area	Protection Level	Debug features, Boot from RAM or from System memory bootloader			Booting from Flash memory		
		Read	Write	Erase	Read	Write	Erase
Main Flash Memory and Backup SRAM	Level 1	NO		NO(1)	YES		
	Level 2	NO			YES		
Option Bytes	Level 1	YES			YES		
	Level 2	NO			NO		
OTP	Level 1	NO		NA	YES		NA
	Level 2	NO		NA	YES		NA

1. The main Flash memory and backup SRAM are only erased when the RDP changes from level 1 to 0. The OTP area remains unchanged.

Figure 6 shows how to go from one RDP level to another.

Figure 6. RDP levels

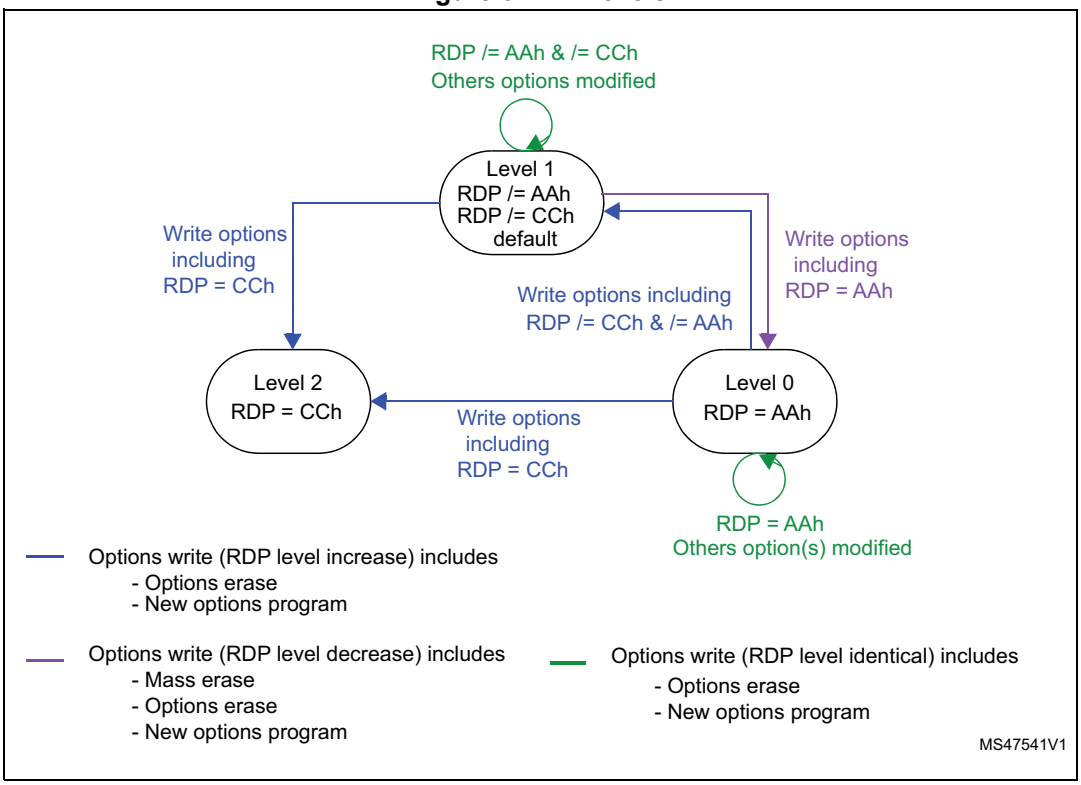

3.7.4 Write protections

Up to 24 user sectors in Flash memory can be protected against unwanted write operations due to loss of program counter contexts. When the non-write protection nWRPi bit (0 ≤ ≤11) in the FLASH_OPTCR or FLASH_OPTCR1 registers is low, the corresponding sector

cannot be erased or programmed. Consequently, a mass erase cannot be performed if one of the sectors is write-protected.

If an erase/program operation to a write-protected part of the Flash memory is attempted (sector protected by write protection bit, OTP part locked or part of the Flash memory that can never be written like the ICP), the write protection error flag (WRPERR) is set in the FLASH_SR register.

On STM32F42xxx and STM32F43xxx devices, when the PCROP mode is set, the active level of nWRPi is high, and the corresponding sector i is write protected when nWRPi is high. A PCROP sector is automatically write protected.

Note: When the memory read protection level is selected (RDP level = 1), it is not possible to program or erase Flash memory sector i if the CPU debug features are connected (JTAG or single wire) or boot code is being executed from RAM, even if nWRPi = 1.

Write protection error flag

If an erase/program operation to a write protected area of the Flash memory is performed, the Write Protection Error flag (WRPERR) is set in the FLASH_SR register.

If an erase operation is requested, the WRPERR bit is set when:

- Mass, bank, sector erase are configured (MER or MER/MER1 and SER = 1)
- A sector erase is requested and the Sector Number SNB field is not valid
- A mass erase is requested while at least one of the user sector is write protected by option bit (MER or MER/MER1 = 1 and nWRPi = 0 with 0 ≤ ≤11 bits in the FLASH_OPTCRx register
- A sector erase is requested on a write protected sector. (SER = 1, SNB = i and nWRPi = 0 with 0 ≤ ≤11 bits in the FLASH_OPTCRx register)
- The Flash memory is readout protected and an intrusion is detected.

If a program operation is requested, the WRPERR bit is set when:

- A write operation is performed on system memory or on the reserved part of the user specific sector.
- A write operation is performed to the user configuration sector
- A write operation is performed on a sector write protected by option bit.
- A write operation is requested on an OTP area which is already locked
- The Flash memory is read protected and an intrusion is detected.

3.7.5 Proprietary code readout protection (PCROP)

The proprietary readout protection (PCROP) is available only on STM32F42xxx and STM32F43xxx devices.

Flash memory user sectors (0 to 23) can be protected against D-bus read accesses by using the proprietary readout protection (PCROP).

The PCROP protection is selected as follows, through the SPRMOD option bit in the FLASH_OPTCR register:

- SPRMOD = 0: nWRPi control the write protection of respective user sectors
- SPRMOD = 1: nWRPi control the read and write protection (PCROP) of respective user sectors.

When a sector is readout protected (PCROP mode activated), it can only be accessed for code fetch through ICODE Bus on Flash interface:

- Any read access performed through the D-bus triggers a RDERR flag error.
- Any program/erase operation on a PCROPed sector triggers a WRPERR flag error.

Figure 7. PCROP levels

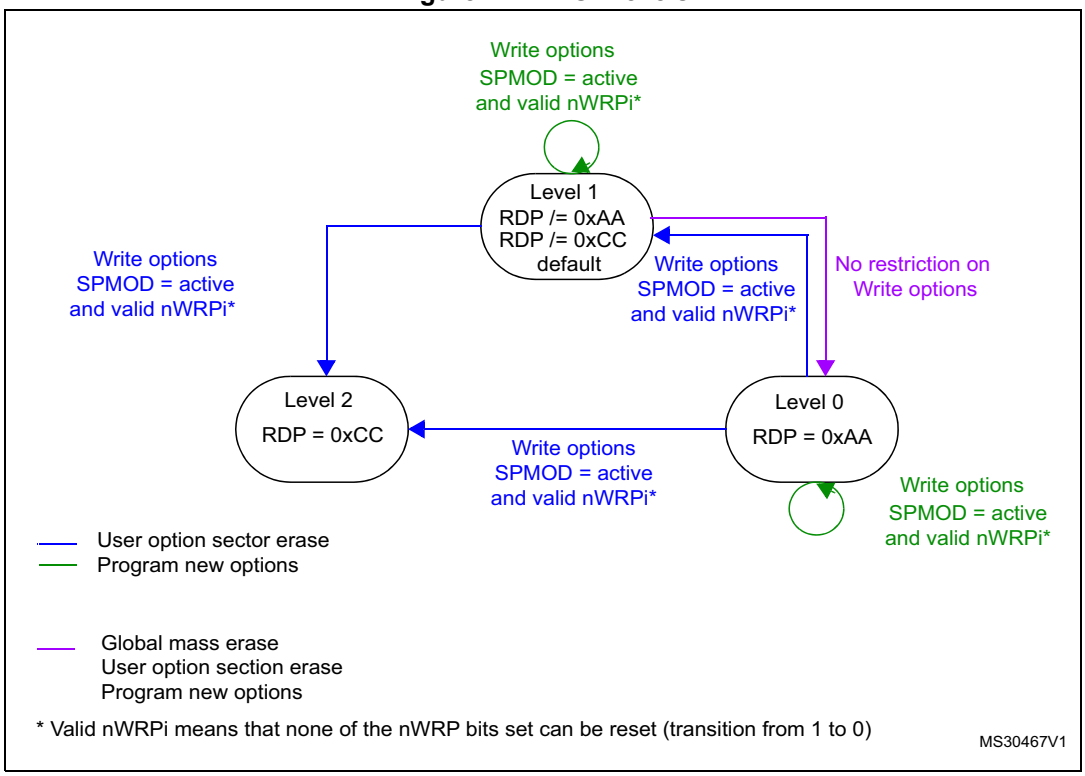

The deactivation of the SPRMOD and/or the unprotection of PCROPed user sectors can only occur when, at the same time, the RDP level changes from 1 to 0. If this condition is not respected, the user option byte modification is cancelled and the write error WRPERR flag is set. The modification of the users option bytes (BOR_LEV, RST_STDBY, ..) is allowed since none of the active nWRPi bits is reset and SPRMOD is kept active.

Note: The active value of nWRPi bits is inverted when PCROP mode is active (SPRMOD =1).

If SPRMOD = 1 and nWRPi =1, then user sector i of bank 1, respectively bank 2 is read/write protected (PCROP).

3.8 One-time programmable bytes

Table 18 shows the organization of the one-time programmable (OTP) part of the OTP area.

Table 18. OTP area organization

Block	[128:96]	[95:64]	[63:32]	[31:0]	Address byte 0
0	OTP0	OTP0	OTP0	OTP0	0x1FFF 7800
	OTP0	OTP0	OTP0	OTP0	0x1FFF 7810
1	OTP1	OTP1	OTP1	OTP1	0x1FFF 7820
	OTP1	OTP1	OTP1	OTP1	0x1FFF 7830
. . .	. . .				. . .
15	OTP15	OTP15	OTP15	OTP15	0x1FFF 79E0
	OTP15	OTP15	OTP15	OTP15	0x1FFF 79F0
Lock block	LOCKB15 ... LOCKB12	LOCKB11 ... LOCKB8	LOCKB7 ... LOCKB4	LOCKB3 ... LOCKB0	0x1FFF 7A00

The OTP area is divided into 16 OTP data blocks of 32 bytes and one lock OTP block of 16 bytes. The OTP data and lock blocks cannot be erased. The lock block contains 16 bytes LOCKBi (0 ≤ ≤15) to lock the corresponding OTP data block (blocks 0 to 15). Each OTP data block can be programmed until the value 0x00 is programmed in the corresponding OTP lock byte. The lock bytes must only contain 0x00 and 0xFF values, otherwise the OTP bytes might not be taken into account correctly.

3.9 Flash interface registers

3.9.1 Flash access control register (FLASH_ACR) for STM32F405xx/07xx and STM32F415xx/17xx

The Flash access control register is used to enable/disable the acceleration features and control the Flash memory access time according to CPU frequency.

Address offset: 0x00
Reset value: 0x0000 0000

Access: no wait state, word, half-word and byte access

31	30	29	28	27	26	25	24	23	22	21	20	19	18	17	16
Reserved															
15	14	13	12	11	10	9	8	7	6	5	4	3	2	1	0
Reserved			DCRST	ICRST	DCEN	ICEN	PRFTEN	Reserved					LATENCY[2:0]		
			rw	w	rw	rw	rw						rw	rw	rw

Bits 31:13 Reserved, must be kept cleared.

Bit 12 **DCRST:** Data cache reset
0: Data cache is not reset
1: Data cache is reset
This bit can be written only when the D cache is disabled.

Bit 11 **ICRST:** Instruction cache reset
0: Instruction cache is not reset
1: Instruction cache is reset
This bit can be written only when the I cache is disabled.

Bit 10 **DCEN:** Data cache enable
0: Data cache is disabled
1: Data cache is enabled

Bit 9 **ICEN:** Instruction cache enable
0: Instruction cache is disabled
1: Instruction cache is enabled

Bit 8 **PRFTEN:** Prefetch enable
0: Prefetch is disabled
1: Prefetch is enabled

Bits 7:3 Reserved, must be kept cleared.

Bits 2:0 **LATENCY[2:0]:** Latency
These bits represent the ratio of the CPU clock period to the Flash memory access time.
000: Zero wait state
001: One wait state
010: Two wait states
011: Three wait states
100: Four wait states
101: Five wait states
110: Six wait states
111: Seven wait states

3.9.2 Flash access control register (FLASH_ACR) for STM32F42xxx and STM32F43xxx

The Flash access control register is used to enable/disable the acceleration features and control the Flash memory access time according to CPU frequency.

Address offset: 0x00
Reset value: 0x0000 0000

Access: no wait state, word, half-word and byte access

31	30	29	28	27	26	25	24	23	22	21	20	19	18	17	16
Reserved															
15	14	13	12	11	10	9	8	7	6	5	4	3	2	1	0
Reserved			DCRST	ICRST	DCEN	ICEN	PRFTEN	Reserved				LATENCY[3:0]			
			rw	w	rw	rw	rw					rw	rw	rw	rw

Bits 31:11 Reserved, must be kept cleared.

Bit 12 **DCRST:** Data cache reset
0: Data cache is not reset
1: Data cache is reset
This bit can be written only when the D cache is disabled.

Bit 11 **ICRST:** Instruction cache reset
0: Instruction cache is not reset
1: Instruction cache is reset
This bit can be written only when the I cache is disabled.

Bit 10 **DCEN:** Data cache enable
0: Data cache is disabled
1: Data cache is enabled

Bit 9 **ICEN:** Instruction cache enable
0: Instruction cache is disabled
1: Instruction cache is enabled

Bit 8 **PRFTEN:** Prefetch enable
0: Prefetch is disabled
1: Prefetch is enabled

Bits 7:4 Reserved, must be kept cleared.

Bits 3:0 **LATENCY[3:0]:** Latency
These bits represent the ratio of the CPU clock period to the Flash memory access time.
0000: Zero wait state
0001: One wait state
0010: Two wait states
...
1110: Fourteen wait states
1111: Fifteen wait states

3.9.3 Flash key register (FLASH_KEYR)

The Flash key register is used to allow access to the Flash control register and so, to allow program and erase operations.

Address offset: 0x04
Reset value: 0x0000 0000

Access: no wait state, word access

31	30	29	28	27	26	25	24	23	22	21	20	19	18	17	16
KEY[31:16]															
w	w	w	w	w	w	w	w	w	w	w	w	w	w	w	w
15	14	13	12	11	10	9	8	7	6	5	4	3	2	1	0
KEY[15:0]															
w	w	w	w	w	w	w	w	w	w	w	w	w	w	w	w

Bits 31:0 **FKEYR[31:0]**: FPEC key

The following values must be programmed consecutively to unlock the FLASH_CR register and allow programming/erasing it:

a) KEY1 = 0x45670123
b) KEY2 = 0xCDEF89AB

3.9.4 Flash option key register (FLASH_OPTKEYR)

The Flash option key register is used to allow program and erase operations in the user configuration sector.

Address offset: 0x08
Reset value: 0x0000 0000

Access: no wait state, word access

31	30	29	28	27	26	25	24	23	22	21	20	19	18	17	16
OPTKEYR[31:16															
w	w	w	w	w	w	w	w	w	w	w	w	w	w	w	w
15	14	13	12	11	10	9	8	7	6	5	4	3	2	1	0
OPTKEYR[15:0]															
w	w	w	w	w	w	w	w	w	w	w	w	w	w	w	w

Bits 31:0 **OPTKEYR[31:0]**: Option byte key

The following values must be programmed consecutively to unlock the FLASH_OPTCR register and allow programming it:

a) OPTKEY1 = 0x08192A3B
b) OPTKEY2 = 0x4C5D6E7F

3.9.5 Flash status register (FLASH_SR) for STM32F405xx/07xx and STM32F415xx/17xx

The Flash status register gives information on ongoing program and erase operations.

Address offset: 0x0C
Reset value: 0x0000 0000

Access: no wait state, word, half-word and byte access

31	30	29	28	27	26	25	24	23	22	21	20	19	18	17	16
Reserved															BSY
															r

15	14	13	12	11	10	9	8	7	6	5	4	3	2	1	0
Reserved								PGSERR	PGPERR	PGAERR	WRPERR	Reserved		OPERR	EOP
								rc_w1	rc_w1	rc_w1	rc_w1			rc_w1	rc_w1

Bits 31:17 Reserved, must be kept cleared.

Bit 16 **BSY:** Busy

This bit indicates that a Flash memory operation is in progress. It is set at the beginning of a Flash memory operation and cleared when the operation finishes or an error occurs.

0: no Flash memory operation ongoing
1: Flash memory operation ongoing

Bits 15:8 Reserved, must be kept cleared.

Bit 7 **PGSERR:** Programming sequence error

Set by hardware when a write access to the Flash memory is performed by the code while the control register has not been correctly configured.

Cleared by writing 1.

Bit 6 **PGPERR:** Programming parallelism error

Set by hardware when the size of the access (byte, half-word, word, double word) during the program sequence does not correspond to the parallelism configuration PSIZE (x8, x16, x32, x64).
Cleared by writing 1.

Bit 5 **PGAERR:** Programming alignment error

Set by hardware when the data to program cannot be contained in the same 128-bit Flash memory row.

Cleared by writing 1.

Bit 4 **WRPERR:** Write protection error

Set by hardware when an address to be erased/programmed belongs to a write-protected part of the Flash memory.

Cleared by writing 1.

Bits 3:2 Reserved, must be kept cleared.

Bit 1 **OPERR:** Operation error

Set by hardware when a flash operation (programming / erase /read) request is detected and can not be run because of parallelism, alignment, or write protection error. This bit is set only if error interrupts are enabled (ERRIE = 1).

Bit 0 **EOP:** End of operation

Set by hardware when one or more Flash memory operations (program/erase) has/have completed successfully. It is set only if the end of operation interrupts are enabled (EOPIE = 1).

Cleared by writing a 1.

3.9.6 Flash status register (FLASH_SR) for STM32F42xxx and STM32F43xxx

The Flash status register gives information on ongoing program and erase operations.

Address offset: 0x0C

Reset value: 0x0000 0000

Access: no wait state, word, half-word and byte access

31	30	29	28	27	26	25	24	23	22	21	20	19	18	17	16
Reserved															BSY
															r

15	14	13	12	11	10	9	8	7	6	5	4	3	2	1	0
Reserved							RDERR	PGSERR	PGPERR	PGAERR	WRPERR	Reserved		OPERR	EOP
							rc_w1	rc_w1	rc_w1	rc_w1	rc_w1			rc_w1	rc_w1

Bits 31:17 Reserved, must be kept cleared.

Bit 16 **BSY:** Busy

This bit indicates that a Flash memory operation is in progress to/from one bank. It is set at the beginning of a Flash memory operation and cleared when the operation finishes or an error occurs.

0: no Flash memory operation ongoing
1: Flash memory operation ongoing

Bits 15:9 Reserved, must be kept cleared.

Bit 8 **RDERR:** Proprietary readout protection (PCROP) error

Set by hardware when a read access through the D-bus is performed to an address belonging to a proprietary readout protected Flash sector.

Cleared by writing 1.

Bit 7 **PGSERR:** Programming sequence error

Set by hardware when a write access to the Flash memory is performed by the code while the control register has not been correctly configured.

Cleared by writing 1.

Bit 6 **PGPERR:** Programming parallelism error

Set by hardware when the size of the access (byte, half-word, word, double word) during the program sequence does not correspond to the parallelism configuration PSIZE (x8, x16, x32, x64).
Cleared by writing 1.

Bit 5 **PGAERR:** Programming alignment error

Set by hardware when the data to program cannot be contained in the same 128-bit Flash memory row.
Cleared by writing 1.

Bit 4 **WRPERR:** Write protection error

Set by hardware when an address to be erased/programmed belongs to a write-protected part of the Flash memory.
Cleared by writing 1.

Bits 3:2 Reserved, must be kept cleared.

Bit 1 **OPERR:** Operation error

Set by hardware when a flash operation (programming/erase/read) request is detected and can not be run because of parallelism, alignment, write or read (PCROP) protection error. This bit is set only if error interrupts are enabled (ERRIE = 1).

Bit 0 **EOP:** End of operation

Set by hardware when one or more Flash memory operations (program/erase) has/have completed successfully. It is set only if the end of operation interrupts are enabled (EOPIE = 1).
Cleared by writing a 1.

3.9.7 Flash control register (FLASH_CR) for STM32F405xx/07xx and STM32F415xx/17xx

The Flash control register is used to configure and start Flash memory operations.

Address offset: 0x10

Reset value: 0x8000 0000

Access: no wait state when no Flash memory operation is ongoing, word, half-word and byte access.

31	30	29	28	27	26	25	24	23	22	21	20	19	18	17	16
LOCK	Reserved					ERRIE	EOPIE	Reserved							STRT
rs						rw	rw								rs

15	14	13	12	11	10	9	8	7	6	5	4	3	2	1	0
Reserved						PSIZE[1:0]		Res.	SNB[3:0]				MER	SER	PG
						rw	rw		rw	rw	rw	rw	rw	rw	rw

Bit 31 **LOCK:** Lock

Write to 1 only. When it is set, this bit indicates that the FLASH_CR register is locked. It is cleared by hardware after detecting the unlock sequence.
In the event of an unsuccessful unlock operation, this bit remains set until the next reset.

Bits 30:26 Reserved, must be kept cleared.

Bit 25 **ERRIE:** Error interrupt enable

This bit enables the interrupt generation when the OPERR bit in the FLASH_SR register is set to 1.

0: Error interrupt generation disabled
1: Error interrupt generation enabled

Bit 24 **EOPIE:** End of operation interrupt enable

This bit enables the interrupt generation when the EOP bit in the FLASH_SR register goes to 1.

0: Interrupt generation disabled
1: Interrupt generation enabled

Bits 23:17 Reserved, must be kept cleared.

Bit 16 **STRT:** Start

This bit triggers an erase operation when set. It is set only by software and cleared when the BSY bit is cleared.

Bits 15:10 Reserved, must be kept cleared.

Bits 9:8 **PSIZE[1:0]:** Program size

These bits select the program parallelism.

00 program x8
01 program x16
10 program x32
11 program x64

Bit 7 Reserved, must be kept cleared.

Bits 6:3 **SNB[3:0]:** Sector number

These bits select the sector to erase.

0000 sector 0
0001 sector 1
...
1011 sector 11
Others not allowed

Bit 2 **MER:** Mass Erase

Erase activated for all user sectors.

Bit 1 **SER:** Sector Erase

Sector Erase activated.

Bit 0 **PG:** Programming

Flash programming activated.

3.9.8 Flash control register (FLASH_CR) for STM32F42xxx and STM32F43xxx

The Flash control register is used to configure and start Flash memory operations.

Address offset: 0x10

Reset value: 0x8000 0000

Access: no wait state when no Flash memory operation is ongoing, word, half-word and byte access.

31	30	29	28	27	26	25	24	23	22	21	20	19	18	17	16
LOCK	Reserved					ERRIE	EOPIE	Reserved							STRT
rs						rw	rw								rs

15	14	13	12	11	10	9	8	7	6	5	4	3	2	1	0
MER1	Reserved					PSIZE[1:0]		SNB[4:0]					MER	SER	PG
rw						rw	rw	rw	rw	rw	rw	rw	rw	rw	rw

Bit 31 **LOCK:** Lock

Write to 1 only. When it is set, this bit indicates that the FLASH_CR register is locked. It is cleared by hardware after detecting the unlock sequence.
In the event of an unsuccessful unlock operation, this bit remains set until the next reset.

Bits 30:26 Reserved, must be kept cleared.

Bit 25 **ERRIE:** Error interrupt enable

This bit enables the interrupt generation when the OPERR bit in the FLASH_SR register is set to 1.

0: Error interrupt generation disabled
1: Error interrupt generation enabled

Bit 24 **EOPIE:** End of operation interrupt enable

This bit enables the interrupt generation when the EOP bit in the FLASH_SR register goes to 1.

0: Interrupt generation disabled
1: Interrupt generation enabled

Bits 23:17 Reserved, must be kept cleared.

Bit 16 **STRT:** Start

This bit triggers an erase operation when set. It is set only by software and cleared when the BSY bit is cleared.

Bit 15 **MER1:** Mass Erase of bank 2 sectors

Erase activated for bank 2 user sectors 12 to 23.

Bits 14:10 Reserved, must be kept cleared.

Bits 9:8 **PSIZE[1:0]:** Program size

These bits select the program parallelism.

00 program x8
01 program x16
10 program x32
11 program x64

Bits 7:3 **SNB[3:0]:** Sector number
These bits select the sector to erase.
0000: sector 0
0001: sector 1
...
01011: sector 11
01100: not allowed
01101: not allowed
01110: not allowed
01111: not allowed
10000: section 12
10001: section 13
...
11011 sector 23
11100: not allowed
11101: not allowed
11110: not allowed
11111: not allowed

Bit 2 **MER:** Mass Erase of bank 1 sectors
Erase activated of bank 1 sectors.

Bit 1 **SER:** Sector Erase
Sector Erase activated.

Bit 0 **PG:** Programming
Flash programming activated.

3.9.9 Flash option control register (FLASH_OPTCR) for STM32F405xx/07xx and STM32F415xx/17xx

The FLASH_OPTCR register is used to modify the user option bytes.

Address offset: 0x14

Reset value: 0x0FFF AAED. The option bits are loaded with values from Flash memory at reset release.

Access: no wait state when no Flash memory operation is ongoing, word, half-word and byte access.

31	30	29	28	27	26	25	24	23	22	21	20	19	18	17	16
Reserved				nWRP[11:0]											
				rw	rw	rw	rw	rw	rw	rw	rw	rw	rw	rw	rw

15	14	13	12	11	10	9	8	7	6	5	4	3	2	1	0
RDP[7:0]								nRST_STDBY	nRST_STOP	WDG_SW	Reserved	BOR_LEV		OPTSTRT	OPTLOCK
rw	rw	rw	rw	rw	rw	rw	rw	rw	rw	rw		rw	rw	rs	rs

Bits 31:28 Reserved, must be kept cleared.

Bits 27:16 **nWRP[11:0]:** Not write protect

These bits contain the value of the write-protection option bytes after reset. They can be written to program a new write protect value into Flash memory.

0: Write protection active on selected sector
1: Write protection inactive on selected sector

Bits 15:8 **RDP[7:0]:** Read protect

These bits contain the value of the read-protection option level after reset. They can be written to program a new read protection value into Flash memory.

0xAA: Level 0, read protection not active
0xCC: Level 2, chip read protection active
Others: Level 1, read protection of memories active

Bits 7:5 **USER[2:0]:** User option bytes

These bits contain the value of the user option byte after reset. They can be written to program a new user option byte value into Flash memory.

Bit 7: nRST_STDBY
Bit 6: nRST_STOP
Bit 5: WDG_SW

Note: When changing the WDG mode from hardware to software or from software to hardware, a system reset is required to make the change effective.

Bit 4 Reserved, must be kept cleared. Always read as “0”.

Bits 3:2 **BOR_LEV[1:0]:** BOR reset Level

These bits contain the supply level threshold that activates/releases the reset. They can be written to program a new BOR level. By default, BOR is off. When the supply voltage (V_{DD}) drops below the selected BOR level, a device reset is generated.

00: BOR Level 3 (VBOR3), brownout threshold level 3
01: BOR Level 2 (VBOR2), brownout threshold level 2
10: BOR Level 1 (VBOR1), brownout threshold level 1
11: BOR off, POR/PDR reset threshold level is applied

Note: For full details about BOR characteristics, refer to the “Electrical characteristics” section in the device datasheet.

Bit 1 **OPTSTRT:** Option start

This bit triggers a user option operation when set. It is set only by software and cleared when the BSY bit is cleared.

Bit 0 **OPTLOCK:** Option lock

Write to 1 only. When this bit is set, it indicates that the FLASH_OPTCR register is locked. This bit is cleared by hardware after detecting the unlock sequence.

In the event of an unsuccessful unlock operation, this bit remains set until the next reset.

3.9.10 Flash option control register (FLASH_OPTCR) for STM32F42xxx and STM32F43xxx

The FLASH_OPTCR register is used to modify the user option bytes.

Address offset: 0x14

Reset value: 0x0FFF AAED. The option bits are loaded with values from Flash memory at reset release.

Access: no wait state when no Flash memory operation is ongoing, word, half-word and byte access.

31	30	29	28	27	26	25	24	23	22	21	20	19	18	17	16
SPR MOD	DB1M	Reserved		nWRP[11:0]											
rw	rw			rw	rw	rw	rw	rw	rw	rw	rw	rw	rw	rw	rw
15	14	13	12	11	10	9	8	7	6	5	4	3	2	1	0
RDP[7:0]								nRST_ STDBY	nRST_ STOP	WDG_ SW	BFB2	BOR_LEV		OPTST RT	OPTLO CK
rw	rw	rw	rw	rw	rw	rw	rw	rw	rw	rw	rw	rw	rw	rs	rs

Bit 31 **SPRMOD**: Selection of protection mode for nWPRi bits

0: PCROP disabled. nWPRi bits used for Write protection on sector i.

1: PCROP enabled. nWPRi bits used for PCROP protection on sector i

Bit 30 **DB1M**: Dual-bank on 1 Mbyte Flash memory devices

0: 1 Mbyte single bank Flash memory (contiguous addresses in bank1)

1: 1 Mbyte dual bank Flash memory. The Flash memory is organized as two banks of 512 Kbytes each (see *Table 7: 1 Mbyte Flash memory single bank vs dual bank organization (STM32F42xxx and STM32F43xxx)* and *Table 9: 1 Mbyte dual bank Flash memory organization (STM32F42xxx and STM32F43xxx)*). To perform an erase operation, the right sector must be programmed (see *Table 7* for information on the sector numbering scheme).

Note: If DB1M is set and an erase operation is performed on Bank 2 while the default sector number is selected (as an example, sector 8 is configured instead of sector 12), the erase operation on Bank 2 sector is not performed.

Bits 29:28 Reserved, must be kept cleared.

Bits 27:16 **nWRP[11:0]:** Not write protect

These bits contain the value of the write-protection and read-protection (PCROP) option bytes for sectors 0 to 11 after reset. They can be written to program a new write-protect or PCROP value into Flash memory.

If SPRMOD is reset:

0: Write protection active on sector i

1: Write protection not active on sector i

If SPRMOD is set:

0: PCROP protection not active on sector i

1: PCROP protection active on sector i

Bits 15:8 **RDP[7:0]:** Read protect

These bits contain the value of the read-protection option level after reset. They can be written to program a new read protection value into Flash memory.

0xAA: Level 0, read protection not active

0xCC: Level 2, chip read protection active

Others: Level 1, read protection of memories active

Bits 7:5 **USER:** User option bytes

These bits contain the value of the user option byte after reset. They can be written to program a new user option byte value into Flash memory.

Bit 7: nRST_STDBY
Bit 6: nRST_STOP
Bit 5: WDG_SW

Note: When changing the WDG mode from hardware to software or from software to hardware, a system reset is required to make the change effective.

Bit 4 **BFB2**: Dual-bank Boot option byte

0: Dual-bank boot disabled. Boot can be performed either from Flash memory bank 1 or from system memory depending on boot pin state (default)
1: Dual-bank boot enabled. Boot is always performed from system memory.

Note: For STM32F42xx and STM32F43xx 1MB part numbers, this option bit must be kept cleared when DB1M=0.

Bits 3:2 **BOR_LEV:** BOR reset Level

These bits contain the supply level threshold that activates/releases the reset. They can be written to program a new BOR level. By default, BOR is off. When the supply voltage (V_{DD}) drops below the selected BOR level, a device reset is generated.

00: BOR Level 3 (VBOR3), brownout threshold level 3
01: BOR Level 2 (VBOR2), brownout threshold level 2
10: BOR Level 1 (VBOR1), brownout threshold level 1
11: BOR off, POR/PDR reset threshold level is applied

Note: For full details on BOR characteristics, refer to the "Electrical characteristics" section of the product datasheet.

Bit 1 **OPTSTRT:** Option start

This bit triggers a user option operation when set. It is set only by software and cleared when the BSY bit is cleared.

Bit 0 **OPTLOCK:** Option lock

Write to 1 only. When this bit is set, it indicates that the FLASH_OPTCR register is locked. This bit is cleared by hardware after detecting the unlock sequence.

In the event of an unsuccessful unlock operation, this bit remains set until the next reset.

3.9.11 Flash option control register (FLASH_OPTCR1) for STM32F42xxx and STM32F43xxx

This register is available only on STM32F42xxx and STM32F43xxx.

The FLASH_OPTCR1 register is used to modify the user option bytes for bank 2.

Address offset: 0x18

Reset value: 0x0FFF 0000. The option bits are loaded with values from Flash memory at reset release.

Access: no wait state when no Flash memory operation is ongoing, word, half-word and byte access.

31	30	29	28	27	26	25	24	23	22	21	20	19	18	17	16
Reserved				nWRP[11:0]											
				rw	rw	rw	rw	rw	rw	rw	rw	rw	rw	rw	rw
15	14	13	12	11	10	9	8	7	6	5	4	3	2	1	0
Reserved															

Bits 31:28 Reserved, must be kept cleared.

Bits 27:16 **nWRP[11:0]:** Not write protect

These bits contain the value of the write-protection and read-protection (PCROP) option bytes for sectors 0 to 11 after reset. They can be written to program a new write-protect or PCROP value into Flash memory.

If SPRMOD is reset (default value):

0: Write protection active on sector i.

1: Write protection not active on sector i.

If SPRMOD is set:

0: PCROP protection not active on sector i.

1: PCROP protection active on sector i.

Bits 15:0 Reserved, must be kept cleared.

3.9.12 Flash interface register map

Table 19. Flash register map and reset values (STM32F405xx/07xx and STM32F415xx/17xx)

Offset	Register	31	30	29	28	27	26	25	24	23	22	21	20	19	18	17	16	15	14	13	12	11	10	9	8	7	6	5	4	3	2	1	0
0x00	FLASH_ACR	Reserved																			DCRST	ICRST	DCEN	ICEN	PRFTEN	Reserved					LATENCY [2:0]		
	Reset value																				0	0	0	0	0						0	0	0
0x04	FLASH_ KEYR	KEY[31:16]																KEY[15:0]															
	Reset value	0	0	0	0	0	0	0	0	0	0	0	0	0	0	0	0	0	0	0	0	0	0	0	0	0	0	0	0	0	0	0	0
0x08	FLASH_OPT KEYR	OPTKEYR[31:16]																OPTKEYR[15:0]															
	Reset value	0	0	0	0	0	0	0	0	0	0	0	0	0	0	0	0	0	0	0	0	0	0	0	0	0	0	0	0	0	0	0	0
0x0C	FLASH_SR	Reserved															BSY	Reserved								PGSERR	PGPERR	PGAERR	WRPERR	Reserved		OPERR	EOP
	Reset value																0									0	0	0	0			0	0
0x10	FLASH_CR	LOCK	Reserved					EOPIE	Reserved								STRT	Reserved						PSIZE[1:0]		Reserved	SNB[3:0]				MER	SER	PG
	Reset value	1						0									0							0	0		0	0	0	0		0	0
0x14	FLASH_ OPTCR	Reserved				nWRP[11:0]												RDP[7:0]								nRST_STDBY	nRST_STOP	WDG_SW	Reserved	BOR_LEV[1:0]		OPTSTRT	OPTLOCK
	Reset value					1	1	1	1	1	1	1	1	1	1	1	1	1	0	1	0	1	0	1	0	1	1	1		1	1	0	1

Table 20. Flash register map and reset values (STM32F42xxx and STM32F43xxx)

Offset	Register	31	30	29	28	27	26	25	24	23	22	21	20	19	18	17	16	15	14	13	12	11	10	9	8	7	6	5	4	3	2	1	0
0x00	FLASH_ACR	Reserved																			DCRST	ICRST	DCEN	ICEN	PRFTEN	Reserved				LATENCY[3:0]			
	Reset value																				0	0	0	0	0					0	0	0	0
0x04	FLASH_KEYR	KEY[31:16]																KEY[15:0]															
	Reset value	0	0	0	0	0	0	0	0	0	0	0	0	0	0	0	0	0	0	0	0	0	0	0	0	0	0	0	0	0	0	0	0
0x08	FLASH_ OPTKEYR	OPTKEYR[31:16]																OPTKEYR[15:0]															
	Reset value	0	0	0	0	0	0	0	0	0	0	0	0	0	0	0	0	0	0	0	0	0	0	0	0	0	0	0	0	0	0	0	0
0x0C	FLASH_SR	Reserved															BSY	Reserved							RDERR	PGSERR	PGPERR	PGAERR	WRPERR	Reserved		OPERR	EOP
	Reset value																0								0	0	0	0	0			0	0

Table 20. Flash register map and reset values (STM32F42xxx and STM32F43xxx) (continued)

Offset	Register	31	30	29	28	27	26	25	24	23	22	21	20	19	18	17	16	15	14	13	12	11	10	9	8	7	6	5	4	3	2	1	0
0x10	**FLASH_CR**	LOCK	Reserved						EOPIE	Reserved							STRT	MER1	Reserved					PSIZE[1:0]		SNB[4:0]					MER	SER	PG
	Reset value	1							0								0	0						0	0	0	0	0	0	0	0	0	0
0x14	**FLASH_OPTCR**	SPRMOD	DB1M	Reserved		nWRP[11:0]												RDP[7:0]								nRST_STDBY	nRST_STOP	WDG_SW	BFB2	BOR_LEV[1:0]		OPTSTRT	OPTLOCK
	Reset value	0	0			1	1	1	1	1	1	1	1	1	1	1	1	1	0	1	0	1	0	1	0	1	1	1	0	1	1	0	1
0x18	**FLASH_ OPTCR1**	Reserved				nWRP[11:0]												Reserved															
	Reset value					1	1	1	1	1	1	1	1	1	1	1	1																

4 CRC calculation unit

This section applies to the whole STM32F4xx family, unless otherwise specified.

4.1 CRC introduction

The CRC (cyclic redundancy check) calculation unit is used to get a CRC code from a 32-bit data word and a fixed generator polynomial.

Among other applications, CRC-based techniques are used to verify data transmission or storage integrity. In the scope of the EN/IEC 60335-1 standard, they offer a means of verifying the Flash memory integrity. The CRC calculation unit helps compute a signature of the software during runtime, to be compared with a reference signature generated at link-time and stored at a given memory location.

4.2 CRC main features

- Uses CRC-32 (Ethernet) polynomial: 0x4C11DB7
  - $X^{32} + X^{26} + X^{23} + X^{22} + X^{16} + X^{12} + X^{11} + X^{10} + X^{8} + X^{7} + X^{5} + X^{4} + X^{2} + X + 1$
- Single input/output 32-bit data register
- CRC computation done in 4 AHB clock cycles (HCLK)
- General-purpose 8-bit register (can be used for temporary storage)

The block diagram is shown in *Figure 8*.

Figure 8. CRC calculation unit block diagram

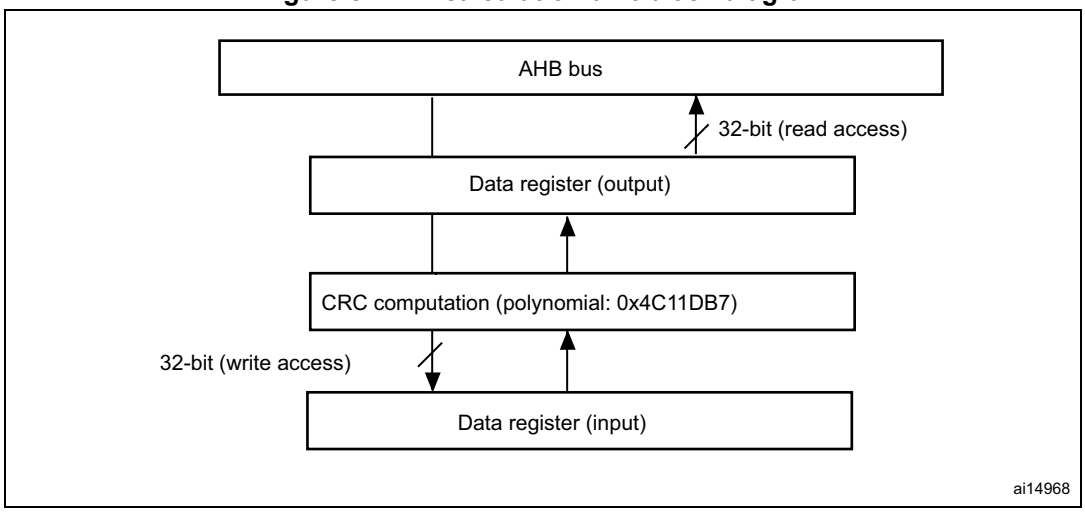

4.3 CRC functional description

The CRC calculation unit mainly consists of a single 32-bit data register, which:

- is used as an input register to enter new data in the CRC calculator (when writing into the register)
- holds the result of the previous CRC calculation (when reading the register)

Each write operation into the data register creates a combination of the previous CRC value and the new one (CRC computation is done on the whole 32-bit data word, and not byte per byte).

The write operation is stalled until the end of the CRC computation, thus allowing back-to-back write accesses or consecutive write and read accesses.

The CRC calculator can be reset to 0xFFFF FFFF with the RESET control bit in the CRC_CR register. This operation does not affect the contents of the CRC_IDR register.

4.4 CRC registers

The CRC calculation unit contains two data registers and a control register. The peripheral
The CRC registers have to be accessed by words (32 bits).

4.4.1 Data register (CRC_DR)

Address offset: 0x00

Reset value: 0xFFFF FFFF

31	30	29	28	27	26	25	24	23	22	21	20	19	18	17	16
DR [31:16]															
rw	rw	rw	rw	rw	rw	rw	rw	rw	rw	rw	rw	rw	rw	rw	rw
15	14	13	12	11	10	9	8	7	6	5	4	3	2	1	0
DR [15:0]															
rw	rw	rw	rw	rw	rw	rw	rw	rw	rw	rw	rw	rw	rw	rw	rw

Bits 31:0 **Data register bits**

Used as an input register when writing new data into the CRC calculator.
Holds the previous CRC calculation result when it is read.

4.4.2 Independent data register (CRC_IDR)

Address offset: 0x04

Reset value: 0x0000 0000

31	30	29	28	27	26	25	24	23	22	21	20	19	18	17	16
Reserved															
15	14	13	12	11	10	9	8	7	6	5	4	3	2	1	0
Reserved								IDR[7:0]							
								rw	rw	rw	rw	rw	rw	rw	rw

Bits 31:8 Reserved, must be kept at reset value.

Bits 7:0 **General-purpose 8-bit data register bits**

Can be used as a temporary storage location for one byte.
This register is not affected by CRC resets generated by the RESET bit in the CRC_CR register.

4.4.3 Control register (CRC_CR)

Address offset: 0x08

Reset value: 0x0000 0000

31	30	29	28	27	26	25	24	23	22	21	20	19	18	17	16
Reserved															

15	14	13	12	11	10	9	8	7	6	5	4	3	2	1	0
Reserved															RESET
															w

Bits 31:1 Reserved, must be kept at reset value.

Bit 0 **RESET bit**

Resets the CRC calculation unit and sets the data register to 0xFFFF FFFF.
This bit can only be set, it is automatically cleared by hardware.

4.4.4 CRC register map

The following table provides the CRC register map and reset values.

Table 21. CRC calculation unit register map and reset values

Offset	Register	31-24	23-16	15-8	7	6	5	4	3	2	1	0
0x00	**CRC_DR**	Data register										
	Reset value	0xFFFF FFFF										
0x04	**CRC_IDR**	Reserved			Independent data register							
	Reset value				0x00							
0x08	**CRC_CR**	Reserved										RESET
	Reset value											0

5 Power controller (PWR)

This section applies to the whole STM32F4xx family, unless otherwise specified.

5.1 Power supplies

The device requires a 1.8 to 3.6 V operating voltage supply (V_{DD}). An embedded linear voltage regulator is used to supply the internal 1.2 V digital power.

The real-time clock (RTC), the RTC backup registers, and the backup SRAM (BKP SRAM) can be powered from the V_{BAT} voltage when the main V_{DD} supply is powered off.

Note: Depending on the operating power supply range, some peripheral may be used with limited functionality and performance. For more details refer to section "General operating conditions" in STM32F4xx datasheets.

Figure 9. Power supply overview for STM32F405xx/07xx and STM32F415xx/17xx

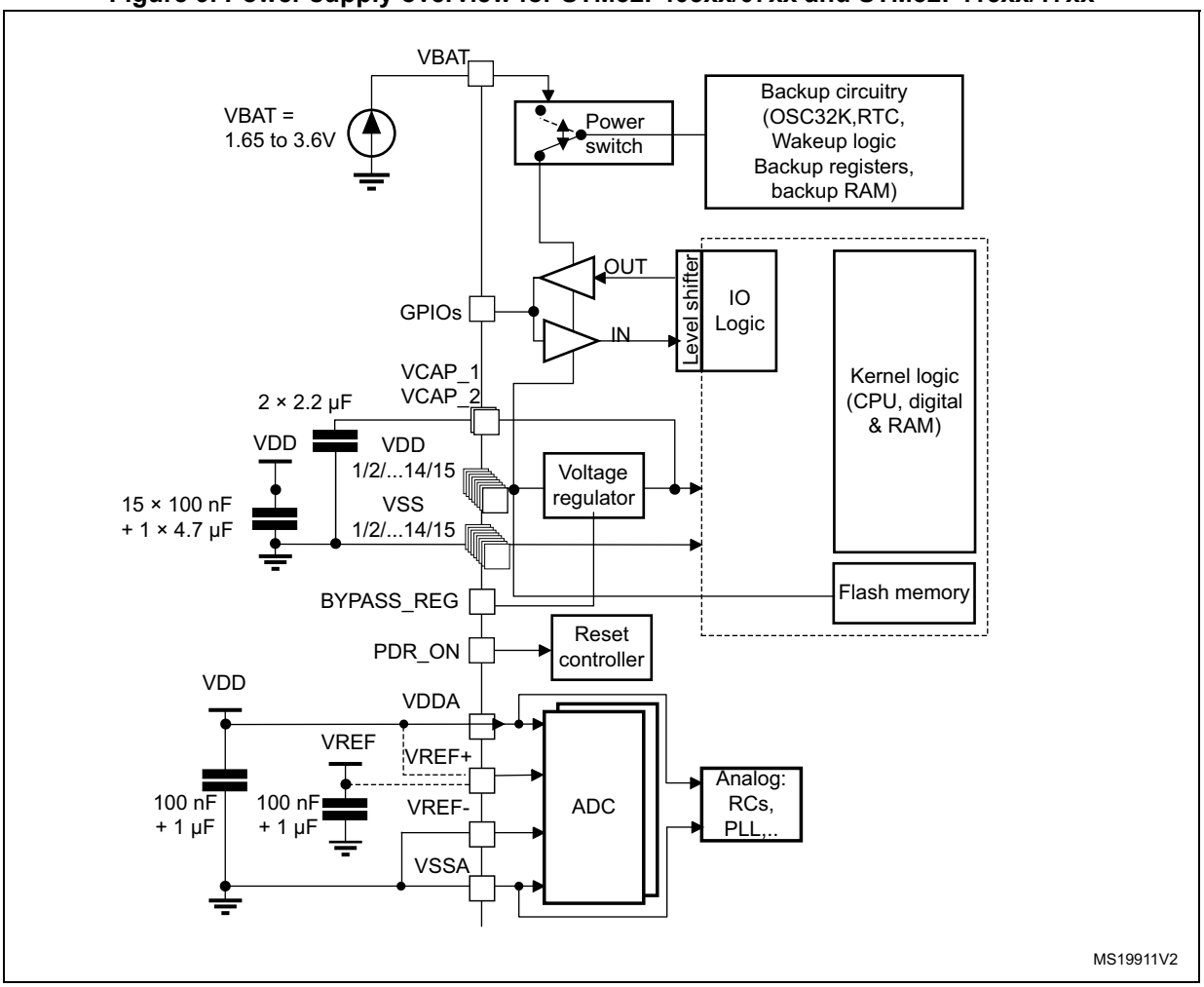

1. V_{DDA} and V_{SSA} must be connected to V_{DD} and V_{SS}, respectively.

Figure 10. Power supply overview for STM32F42xxx and STM32F43xxx

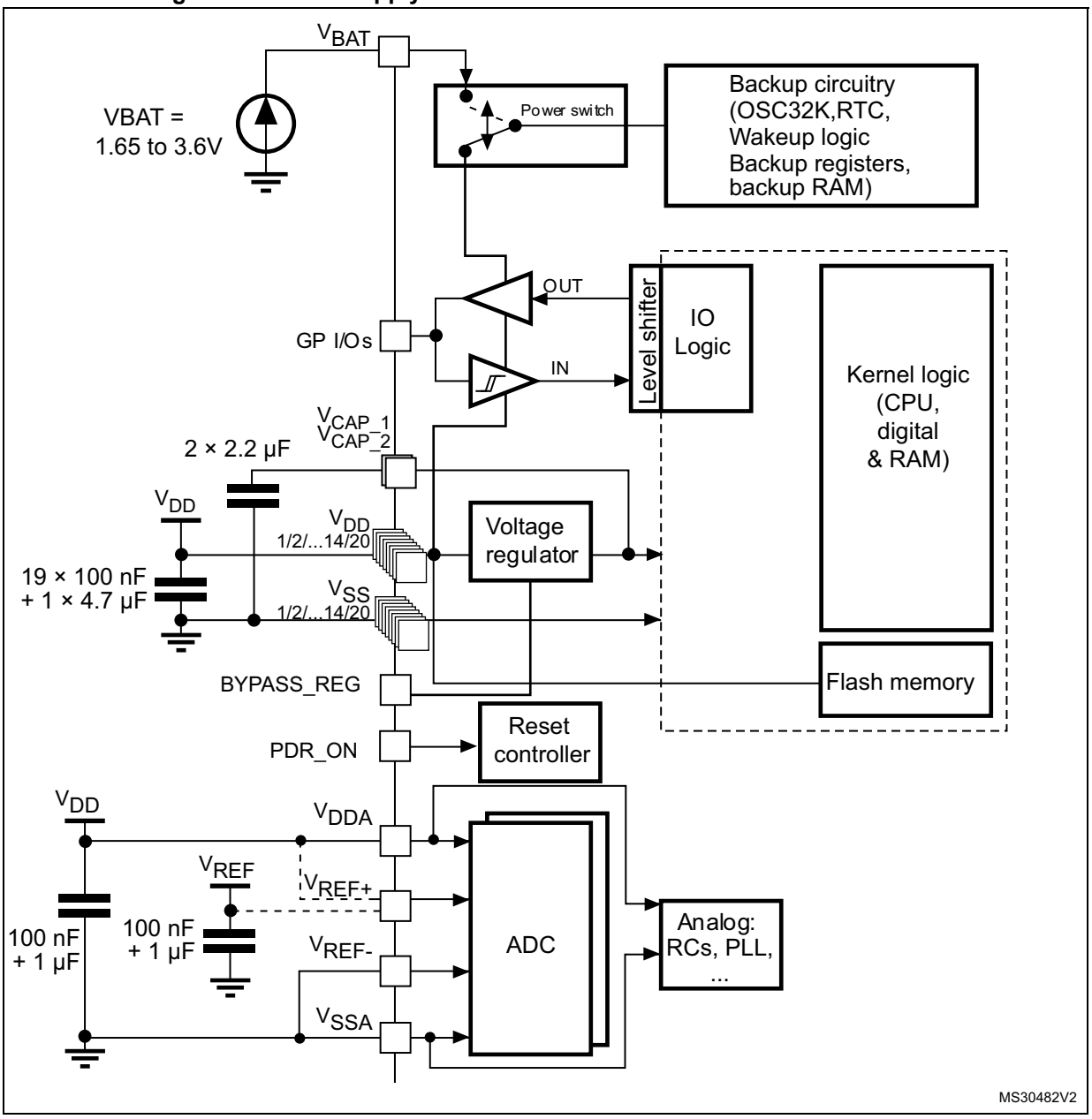

1. V_{DDA} and V_{SSA} must be connected to V_{DD} and V_{SS}, respectively.

5.1.1 Independent A/D converter supply and reference voltage

To improve conversion accuracy, the ADC has an independent power supply which can be separately filtered and shielded from noise on the PCB.

- The ADC voltage supply input is available on a separate V_{DDA} pin.
- An isolated supply ground connection is provided on pin V_{SSA}.

To ensure a better accuracy of low voltage inputs, the user can connect a separate external reference voltage ADC input on V_{REF}. The voltage on V_{REF} ranges from 1.8 V to V_{DDA}.

5.1.2 Battery backup domain

Backup domain description

To retain the content of the RTC backup registers, backup SRAM, and supply the RTC when V_{DD} is turned off, V_{BAT} pin can be connected to an optional standby voltage supplied by a battery or by another source.

To allow the RTC to operate even when the main digital supply (V_{DD}) is turned off, the V_{BAT} pin powers the following blocks:

- The RTC
- The LSE oscillator
- The backup SRAM when the low-power backup regulator is enabled
- PC13 to PC15 I/Os, plus PI8 I/O (when available)

The switch to the V_{BAT} supply is controlled by the power-down reset embedded in the Reset block.

Warning: **During $t_{RSTTEMPO}$ (temporization at V_{DD} startup) or after a PDR is detected, the power switch between V_{BAT} and V_{DD} remains connected to V_{BAT}.**
During the startup phase, if V_{DD} is established in less than $t_{RSTTEMPO}$ (Refer to the datasheet for the value of $t_{RSTTEMPO}$) and $V_{DD} > V_{BAT} + 0.6$ V, a current may be injected into V_{BAT} through an internal diode connected between V_{DD} and the power switch (V_{BAT}).
If the power supply/battery connected to the V_{BAT} pin cannot support this current injection, it is strongly recommended to connect an external low-drop diode between this power supply and the V_{BAT} pin.

If no external battery is used in the application, it is recommended to connect the V_{BAT} pin to V_{DD} with a 100 nF external decoupling ceramic capacitor in parallel.

When the backup domain is supplied by V_{DD} (analog switch connected to V_{DD}), the following functions are available:

- PC14 and PC15 can be used as either GPIO or LSE pins
- PC13 can be used as a GPIOas the RTC_AF1 pin (refer to *Table 37: RTC_AF1 pin* for more details about this pin configuration)

Note: Due to the fact that the switch only sinks a limited amount of current (3 mA), the use of PI8 and PC13 to PC15 GPIOs in output mode is restricted: the speed has to be limited to 2 MHz with a maximum load of 30 pF and these I/Os must not be used as a current source (e.g. to drive an LED).

When the backup domain is supplied by V_{BAT} (analog switch connected to V_{BAT} because V_{DD} is not present), the following functions are available:

- PC14 and PC15 can be used as LSE pins only
- PC13 can be used as the RTC_AF1 pin (refer to *Table 37: RTC_AF1 pin* for more details about this pin configuration)
- PI8 can be used as RTC_AF2

Backup domain access

After reset, the backup domain (RTC registers, RTC backup register and backup SRAM) is protected against possible unwanted write accesses. To enable access to the backup domain, proceed as follows:

- Access to the RTC and RTC backup registers

1. Enable the power interface clock by setting the PWREN bits in the RCC_APB1ENR register (see *Section 7.3.13* and *Section 6.3.13*)
2. Set the DBP bit in the *Section 5.4.1* and *PWR power control register (PWR_CR) for STM32F42xxx and STM32F43xxx* to enable access to the backup domain
3. Select the RTC clock source: see *Section 7.2.8: RTC/AWU clock*
4. Enable the RTC clock by programming the RTCEN [15] bit in the *Section 7.3.20: RCC Backup domain control register (RCC_BDCR)*

- Access to the backup SRAM

1. Enable the power interface clock by setting the PWREN bits in the RCC_APB1ENR register (see *Section 7.3.13* and *Section 6.3.13* for STM32F405xx/07xx and STM32F415xx/17xx and STM32F42xxx and STM32F43xxx, respectively)
2. Set the DBP bit in the *PWR power control register (PWR_CR) for STM32F405xx/07xx and STM32F415xx/17xx* and *PWR power control register (PWR_CR) for STM32F42xxx and STM32F43xxx* to enable access to the backup domain
3. Enable the backup SRAM clock by setting BKPSRAMEN bit in the *RCC AHB1 peripheral clock enable register (RCC_AHB1ENR)*.

RTC and RTC backup registers

The real-time clock (RTC) is an independent BCD timer/counter. The RTC provides a time-of-day clock/calendar, two programmable alarm interrupts, and a periodic programmable wakeup flag with interrupt capability. The RTC contains 20 backup data registers (80 bytes) which are reset when a tamper detection event occurs. For more details refer to *Section 26: Real-time clock (RTC)*.

Backup SRAM

The backup domain includes 4 Kbytes of backup SRAM addressed in 32-bit, 16-bit or 8-bit mode. Its content is retained even in Standby or V_{BAT} mode when the low-power backup regulator is enabled. It can be considered as an internal EEPROM when V_{BAT} is always present.

When the backup domain is supplied by V_{DD} (analog switch connected to V_{DD}), the backup SRAM is powered from V_{DD} which replaces the V_{BAT} power supply to save battery life.

When the backup domain is supplied by V_{BAT} (analog switch connected to V_{BAT} because V_{DD} is not present), the backup SRAM is powered by a dedicated low-power regulator. This regulator can be ON or OFF depending whether the application needs the backup SRAM function in Standby and V_{BAT} modes or not. The power-down of this regulator is controlled

by a dedicated bit, the BRE control bit of the PWR_CSR register (see *Section 5.4.2: PWR power control/status register (PWR_CSR) for STM32F405xx/07xx and STM32F415xx/17xx*).

The backup SRAM is not mass erased by an tamper event. When the Flash memory is read protected, the backup SRAM is also read protected to prevent confidential data, such as cryptographic private key, from being accessed. When the protection level change from level 1 to level 0 is requested, the backup SRAM content is erased.

Figure 11. Backup domain

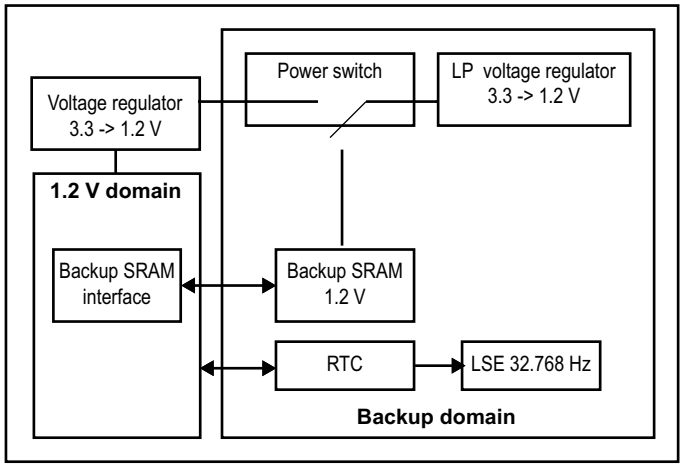

5.1.3 Voltage regulator for STM32F405xx/07xx and STM32F415xx/17xx

An embedded linear voltage regulator supplies all the digital circuitries except for the backup domain and the Standby circuitry. The regulator output voltage is around 1.2 V.

This voltage regulator requires one or two external capacitors to be connected to one or two dedicated pins, V_{CAP_1} and V_{CAP_2} available in all packages. Specific pins must be connected either to V_{SS} or V_{DD} to activate or deactivate the voltage regulator. These pins depend on the package.

When activated by software, the voltage regulator is always enabled after Reset. It works in three different modes depending on the application modes.

- In **Run mode**, the regulator supplies full power to the 1.2 V domain (core, memories and digital peripherals). In this mode, the regulator output voltage (around 1.2 V) can be scaled by software to different voltage values:

  Scale 1 or scale 2 can be configured on the fly through VOS (bit 15 of the PWR_CR register).

  The voltage scaling allows optimizing the power consumption when the device is clocked below the maximum system frequency.
- In **Stop mode,** the main regulator or the low-power regulator supplies to the 1.2 V domain, thus preserving the content of registers and internal SRAM. The voltage

regulator can be put either in main regulator mode (MR) or in low-power mode (LPR). The programmed voltage scale remains the same during Stop mode:

The programmed voltage scale remains the same during Stop mode (see *Section 5.4.1: PWR power control register (PWR_CR) for STM32F405xx/07xx and STM32F415xx/17xx*).

- In **Standby mode**, the regulator is powered down. The content of the registers and SRAM are lost except for the Standby circuitry and the backup domain.

Note: For more details, refer to the voltage regulator section in the STM32F405xx/07xx and STM32F415xx/17xx datasheets.

5.1.4 Voltage regulator for STM32F42xxx and STM32F43xxx

An embedded linear voltage regulator supplies all the digital circuitries except for the backup domain and the Standby circuitry. The regulator output voltage is around 1.2 V.

This voltage regulator requires two external capacitors to be connected to two dedicated pins, V_{CAP_1} and V_{CAP_2} available in all packages. Specific pins must be connected either to V_{SS} or V_{DD} to activate or deactivate the voltage regulator. These pins depend on the package.

When activated by software, the voltage regulator is always enabled after Reset. It works in three different modes depending on the application modes (Run, Stop, or Standby mode).

- In **Run mode**, the main regulator supplies full power to the 1.2 V domain (core, memories and digital peripherals). In this mode, the regulator output voltage (around 1.2 V) can be scaled by software to different voltage values (scale 1, scale 2, and scale 3 can be configured through VOS[1:0] bits of the PWR_CR register). The scale can be modified only when the PLL is OFF and the HSI or HSE clock source is selected as system clock source. The new value programmed is active only when the PLL is ON. When the PLL is OFF, the voltage scale 3 is automatically selected.

  The voltage scaling allows optimizing the power consumption when the device is clocked below the maximum system frequency. After exit from Stop mode, the voltage

scale 3 is automatically selected.(see *Section 5.4.1: PWR power control register (PWR_CR) for STM32F405xx/07xx and STM32F415xx/17xx*.

2 operating modes are available:

– **Normal mode**: The CPU and core logic operate at maximum frequency at a given voltage scaling (scale 1, scale 2 or scale 3)

– **Over-drive mode**: This mode allows the CPU and the core logic to operate at a higher frequency than the normal mode for the voltage scaling scale 1 and scale 2.

- In **Stop mode**: the main regulator or low-power regulator supplies a low-power voltage to the 1.2V domain, thus preserving the content of registers and internal SRAM.

  The voltage regulator can be put either in main regulator mode (MR) or in low-power mode (LPR). Both modes can be configured by software as follows:

  – **Normal mode**: the 1.2 V domain is preserved in nominal leakage mode. It is the default mode when the main regulator (MR) or the low-power regulator (LPR) is enabled.

  – **Under-drive mode**: the 1.2 V domain is preserved in reduced leakage mode. This mode is only available with the main regulator or in low-power regulator mode (see *Table 22*).

- In **Standby mode**: the regulator is powered down. The content of the registers and SRAM are lost except for the Standby circuitry and the backup domain.

Note: Over-drive and under-drive mode are not available when the regulator is bypassed.

For more details, refer to the voltage regulator section in the STM32F42xxx and STM32F43xxx datasheets.

Table 22. Voltage regulator configuration mode versus device operating mode(1)

Voltage regulator configuration	Run mode	Sleep mode	Stop mode	Standby mode
Normal mode	MR	MR	MR or LPR	-
Over-drive mode(2)	MR	MR	-	-
Under-drive mode	-	-	MR or LPR	-
Power-down mode	-	-	-	Yes

1. '-' means that the corresponding configuration is not available.
2. The over-drive mode is not available when V_{DD} = 1.8 to 2.1 V.

Entering Over-drive mode

It is recommended to enter Over-drive mode when the application is not running critical tasks and when the system clock source is either HSI or HSE. To optimize the configuration time, enable the Over-drive mode during the PLL lock phase.

To enter Over-drive mode, follow the sequence below:

1. Select HSI or HSE as system clock.
2. Configure RCC_PLLCFGR register and set PLLON bit of RCC_CR register.
3. Set ODEN bit of PWR_CR register to enable the Over-drive mode and wait for the ODRDY flag to be set in the PWR_CSR register.
4. Set the ODSW bit in the PWR_CR register to switch the voltage regulator from Normal mode to Over-drive mode. The System will be stalled during the switch but the PLL clock system will be still running during locking phase.
5. Wait for the ODSWRDY flag in the PWR_CSR to be set.
6. Select the required Flash latency as well as AHB and APB prescalers.
7. Wait for PLL lock.
8. Switch the system clock to the PLL.
9. Enable the peripherals that are not generated by the System PLL (I2S clock, LCD-TFT clock, SAI1 clock, USB_48MHz clock....).

Note: The PLLI2S and PLLSAI can be configured at the same time as the system PLL.

During the Over-drive switch activation, no peripheral clocks should be enabled. The peripheral clocks must be enabled once the Over-drive mode is activated.

Entering Stop mode disables the Over-drive mode, as well as the PLL. The application software has to configure again the Over-drive mode and the PLL after exiting from Stop mode.

Exiting from Over-drive mode

It is recommended to exit from Over-drive mode when the application is not running critical tasks and when the system clock source is either HSI or HSE.There are two sequences that allow exiting from over-drive mode:

- By resetting simultaneously the ODEN and ODSW bits bit in the PWR_CR register (sequence 1)
- By resetting first the ODSW bit to switch the voltage regulator to Normal mode and then resetting the ODEN bit to disable the Over-drive mode (sequence 2).

Example of sequence 1:

1. Select HSI or HSE as system clock source.
2. Disable the peripheral clocks that are not generated by the System PLL (I2S clock, LCD-TFT clock, SAI1 clock, USB_48MHz clock,....)
3. Reset simultaneously the ODEN and the ODSW bits in the PWR_CR register to switch back the voltage regulator to Normal mode and disable the Over-drive mode.
4. Wait for the ODWRDY flag of PWR_CSR to be reset.

Example of sequence 2:

1. Select HSI or HSE as system clock source.
2. Disable the peripheral clocks that are not generated by the System PLL (I2S clock, LCD-TFT clock, SAI1 clock, USB_48MHz clock,....).
3. Reset the ODSW bit in the PWR_CR register to switch back the voltage regulator to Normal mode. The system clock is stalled during voltage switching.
4. Wait for the ODWRDY flag of PWR_CSR to be reset.
5. Reset the ODEN bit in the PWR_CR register to disable the Over-drive mode.

Note: During step 3, the ODEN bit remains set and the Over-drive mode is still enabled but not active (ODSW bit is reset). If the ODEN bit is reset instead, the Over-drive mode is disabled and the voltage regulator is switched back to the initial voltage.

5.2 Power supply supervisor

5.2.1 Power-on reset (POR)/power-down reset (PDR)

The device has an integrated POR/PDR circuitry that allows proper operation starting from 1.8 V.

The device remains in Reset mode when V_{DD}/V_{DDA} is below a specified threshold, $V_{POR/PDR}$, without the need for an external reset circuit. For more details concerning the power on/power-down reset threshold, refer to the electrical characteristics of the datasheet.

Figure 12. Power-on reset/power-down reset waveform

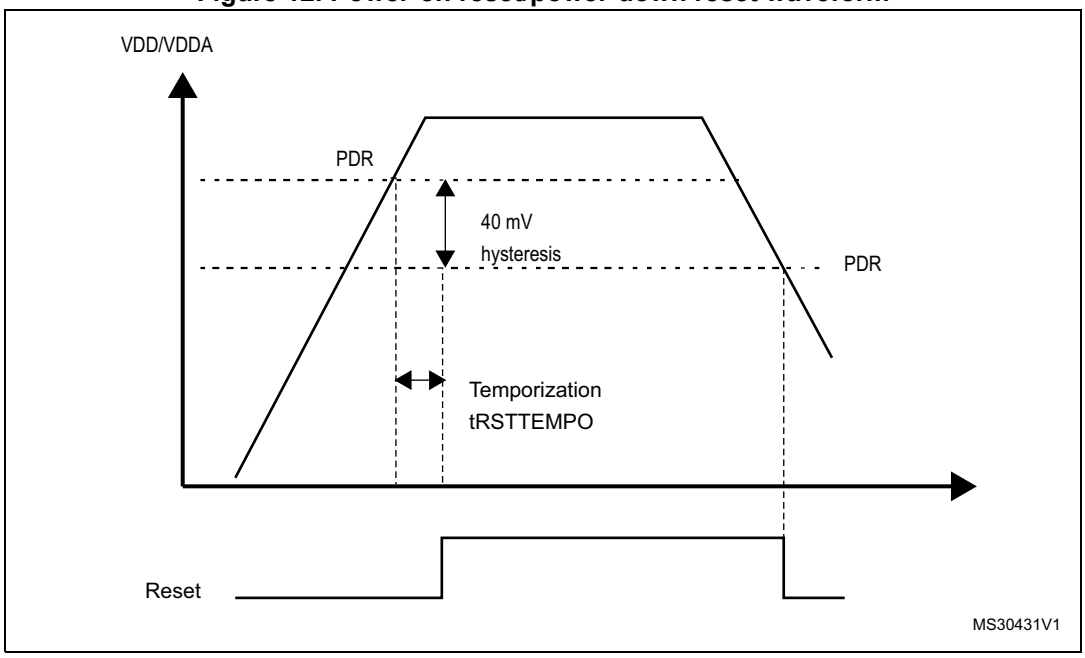

5.2.2 Brownout reset (BOR)

During power on, the Brownout reset (BOR) keeps the device under reset until the supply voltage reaches the specified V_{BOR} threshold.

V_{BOR} is configured through device option bytes. By default, BOR is off. 3 programmable V_{BOR} threshold levels can be selected:

- BOR Level 3 (VBOR3). Brownout threshold level 3.
- BOR Level 2 (VBOR2). Brownout threshold level 2.
- BOR Level 1 (VBOR1). Brownout threshold level 1.

Note: For full details about BOR characteristics, refer to the "Electrical characteristics" section in the device datasheet.

When the supply voltage (V_{DD}) drops below the selected V_{BOR} threshold, a device reset is generated.

The BOR can be disabled by programming the device option bytes. In this case, the power-on and power-down is then monitored by the POR/ PDR (see *Section 5.2.1: Power-on reset (POR)/power-down reset (PDR)*).

The BOR threshold hysteresis is ~100 mV (between the rising and the falling edge of the supply voltage).

Figure 13. BOR thresholds

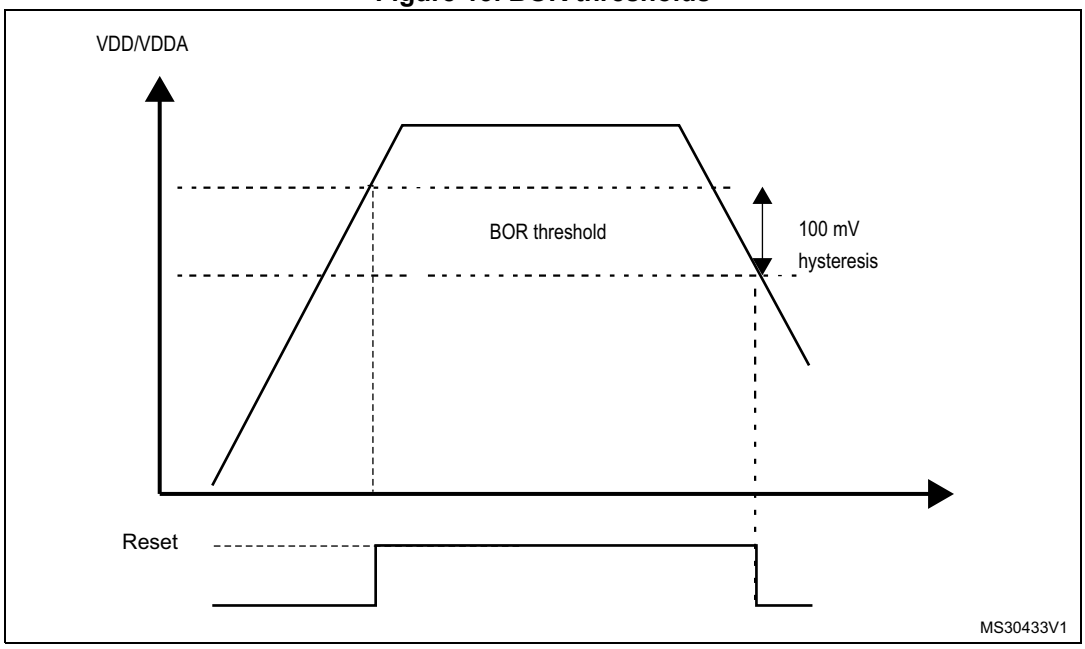

5.2.3 Programmable voltage detector (PVD)

You can use the PVD to monitor the V_{DD} power supply by comparing it to a threshold selected by the PLS[2:0] bits in the *PWR power control register (PWR_CR) for*

STM32F405xx/07xx and STM32F415xx/17xx and *PWR power control register (PWR_CR) for STM32F42xxx and STM32F43xxx*.

The PVD is enabled by setting the PVDE bit.

A PVDO flag is available, in the *PWR power control/status register (PWR_CSR) for STM32F405xx/07xx and STM32F415xx/17xx*, to indicate if V_{DD} is higher or lower than the PVD threshold. This event is internally connected to the EXTI line16 and can generate an interrupt if enabled through the EXTI registers. The PVD output interrupt can be generated when V_{DD} drops below the PVD threshold and/or when V_{DD} rises above the PVD threshold depending on EXTI line16 rising/falling edge configuration. As an example the service routine could perform emergency shutdown tasks.

Figure 14. PVD thresholds

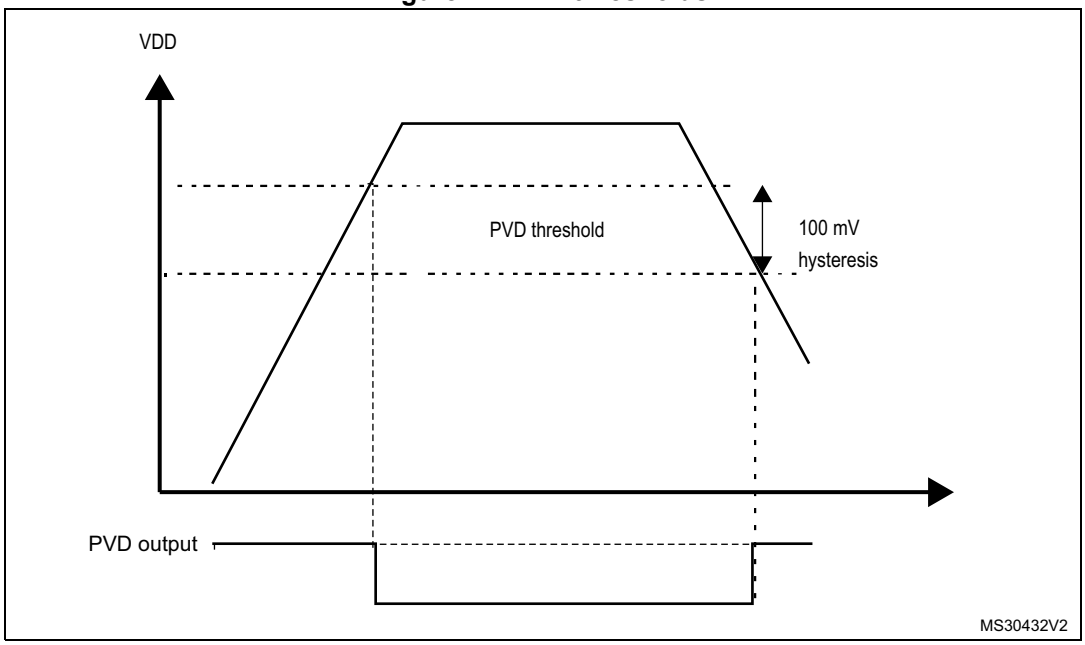

5.3 Low-power modes

By default, the microcontroller is in Run mode after a system or a power-on reset. In Run mode the CPU is clocked by HCLK and the program code is executed. Several low-power modes are available to save power when the CPU does not need to be kept running, for example when waiting for an external event. It is up to the user to select the mode that gives the best compromise between low-power consumption, short startup time and available wakeup sources.

The devices feature three low-power modes:

- Sleep mode (Cortex®-M4 with FPU core stopped, peripherals kept running)
- Stop mode (all clocks are stopped)
- Standby mode (1.2 V domain powered off)

In addition, the power consumption in Run mode can be reduce by one of the following means:

- Slowing down the system clocks
- Gating the clocks to the APBx and AHBx peripherals when they are unused.

Entering low-power mode

Low-power modes are entered by the MCU by executing the WFI (Wait For Interrupt), or WFE (Wait for Event) instructions, or when the SLEEPONEXIT bit in the Cortex®-M4 with FPU System Control register is set on Return from ISR.

Entering Low-power mode through WFI or WFE will be executed only if no interrupt is pending or no event is pending.

Exiting low-power mode

The MCU exits from Sleep and Stop modes low-power mode depending on the way the low-power mode was entered:

- If the WFI instruction or Return from ISR was used to enter the low-power mode, any peripheral interrupt acknowledged by the NVIC can wake up the device.
- If the WFE instruction is used to enter the low-power mode, the MCU exits the low-power mode as soon as an event occurs. The wakeup event can be generated either by:
  - NVIC IRQ interrupt:

    When SEVONPEND = 0 in the Cortex®-M4 with FPU System Control register: by enabling an interrupt in the peripheral control register and in the NVIC. When the MCU resumes from WFE, the peripheral interrupt pending bit and the NVIC peripheral IRQ channel pending bit (in the NVIC interrupt clear pending register) have to be cleared. Only NVIC interrupts with sufficient priority will wakeup and interrupt the MCU.

    When SEVONPEND = 1 in the Cortex®-M4 with FPU System Control register: by enabling an interrupt in the peripheral control register and optionally in the NVIC. When the MCU resumes from WFE, the peripheral interrupt pending bit and when enabled the NVIC peripheral IRQ channel pending bit (in the NVIC interrupt clear pending register) have to be cleared. All NVIC interrupts will wakeup the MCU, even the disabled ones.Only enabled NVIC interrupts with sufficient priority will wakeup and interrupt the MCU.
  - Event

    This is done by configuring a EXTI line in event mode. When the CPU resumes from WFE, it is not necessary to clear the EXTI peripheral interrupt pending bit or the NVIC IRQ channel pending bit as the pending bits corresponding to the event line is not set. It may be necessary to clear the interrupt flag in the peripheral.

The MCU exits from Standby low-power mode through an external reset (NRST pin), an IWDG reset, a rising edge on one of the enabled WKUPx pins or a RTC event occurs (see *Figure 237: RTC block diagram*).

After waking up from Standby mode, program execution restarts in the same way as after a Reset (boot pin sampling, option bytes loading, reset vector is fetched, etc.).

Only enabled NVIC interrupts with sufficient priority will wakeup and interrupt the MCU.

Table 23. Low-power mode summary

Mode name	Entry	Wakeup	Effect on 1.2 V domain clocks	Effect on V_{DD} domain clocks	Voltage regulator
Sleep (Sleep now or Sleep-on-exit)	WFI or Return from ISR	Any interrupt	CPU CLK OFF no effect on other clocks or analog clock sources	None	ON
	WFE	Wakeup event			
Stop	PDDS and LPDS bits + SLEEPDEEP bit + WFI, Return from ISR or WFE	Any EXTI line (configured in the EXTI registers, internal and external lines)	All 1.2 V domain clocks OFF	HSI and HSE oscillators OFF	ON or in low- power mode (depends on *PWR power control register (PWR_CR) for STM32F405xx/07xx and STM32F415xx/17xx* and *PWR power control register (PWR_CR) for STM32F405xx/07xx and STM32F415xx/17xxPWR power control register (PWR_CR) for STM32F42xxx and STM32F43xxx*
Standby	PDDS bit + SLEEPDEEP bit + WFI, Return from ISR or WFE	WKUP pin rising edge, RTC alarm (Alarm A or Alarm B), RTC Wakeup event, RTC tamper events, RTC time stamp event, external reset in NRST pin, IWDG reset			OFF

5.3.1 Slowing down system clocks

In Run mode the speed of the system clocks (SYSCLK, HCLK, PCLK1, PCLK2) can be reduced by programming the prescaler registers. These prescalers can also be used to slow down peripherals before entering Sleep mode.

For more details refer to *Section 7.3.3: RCC clock configuration register (RCC_CFGR)*.

5.3.2 Peripheral clock gating

In Run mode, the HCLKx and PCLKx for individual peripherals and memories can be stopped at any time to reduce power consumption.

To further reduce power consumption in Sleep mode the peripheral clocks can be disabled prior to executing the WFI or WFE instructions.

Peripheral clock gating is controlled by the AHB1 peripheral clock enable register (RCC_AHB1ENR), AHB2 peripheral clock enable register (RCC_AHB2ENR), AHB3 peripheral clock enable register (RCC_AHB3ENR) (see *Section 7.3.10: RCC AHB1 peripheral clock enable register (RCC_AHB1ENR)*, *Section 7.3.11: RCC AHB2 peripheral clock enable register (RCC_AHB2ENR)*, *Section 7.3.12: RCC AHB3 peripheral clock enable register (RCC_AHB3ENR)* for STM32F405xx/07xx and STM32F415xx/17xx, and *Section 6.3.10: RCC AHB1 peripheral clock register (RCC_AHB1ENR)*, *Section 6.3.11: RCC AHB2 peripheral clock enable register (RCC_AHB2ENR)*, and *Section 6.3.12: RCC AHB3 peripheral clock enable register (RCC_AHB3ENR)* for STM32F42xxx and STM32F43xxx).

Disabling the peripherals clocks in Sleep mode can be performed automatically by resetting the corresponding bit in RCC_AHBxLPENR and RCC_APBxLPENR registers.

5.3.3 Sleep mode

Entering Sleep mode

The Sleep mode is entered according to *Section : Entering low-power mode*, when the SLEEPDEEP bit in the Cortex®-M4 with FPU System Control register is cleared.

Refer to *Table 24* and *Table 25* for details on how to enter Sleep mode.

Note: All interrupt pending bits must be cleared before the sleep mode entry.

Exiting Sleep mode

The Sleep mode is exited according to *Section : Exiting low-power mode*.

Refer to *Table 24* and *Table 25* for more details on how to exit Sleep mode.

Table 24. Sleep-now entry and exit

Sleep-now mode	Description
Mode entry	WFI (Wait for Interrupt) or WFE (Wait for Event) while: – SLEEPDEEP = 0, and – No interrupt (for WFI) or event (for WFE) is pending. Refer to the Cortex®-M4 with FPU System Control register.
	On Return from ISR while: – SLEEPDEEP = 0 and – SLEEPONEXIT = 1, – No interrupt is pending. Refer to the Cortex®-M4 with FPU System Control register.

Table 24. Sleep-now entry and exit (continued)

Sleep-now mode	Description
Mode exit	If WFI or Return from ISR was used for entry: Interrupt: Refer to *Table 61: Vector table for STM32F405xx/07xx and STM32F415xx/17xx* and *Table 62: Vector table for STM32F42xxx and STM32F43xxx* If WFE was used for entry and SEVONPEND = 0 Wakeup event: Refer to *Section 12.2.3: Wakeup event management* f WFE was used for entry and SEVONPEND = 1 Interrupt even when disabled in NVIC: refer to *Table 61: Vector table for STM32F405xx/07xx and STM32F415xx/17xx* and *Table 62: Vector table for STM32F42xxx and STM32F43xxx* or Wakeup event (see *Section 12.2.3: Wakeup event management*).
Wakeup latency	None

Table 25. Sleep-on-exit entry and exit

Sleep-on-exit	Description
Mode entry	WFI (Wait for Interrupt) or WFE (Wait for Event) while: – SLEEPDEEP = 0, and – No interrupt (for WFI) or event (for WFE) is pending. Refer to the Cortex®-M4 with FPU System Control register.
	On Return from ISR while: – SLEEPDEEP = 0, and – SLEEPONEXIT = 1, and – No interrupt is pending. Refer to the Cortex®-M4 with FPU System Control register.
Mode exit	Interrupt: refer to *Table 61: Vector table for STM32F405xx/07xx and STM32F415xx/17xx* and *Table 62: Vector table for STM32F42xxx and STM32F43xxx*
Wakeup latency	None

5.3.4 Stop mode (STM32F405xx/07xx and STM32F415xx/17xx)

The Stop mode is based on the Cortex®-M4 with FPU deepsleep mode combined with peripheral clock gating. The voltage regulator can be configured either in normal or low-power mode. In Stop mode, all clocks in the 1.2 V domain are stopped, the PLLs, the HSI and the HSE RC oscillators are disabled. Internal SRAM and register contents are preserved.

By setting the FPDS bit in the PWR_CR register, the Flash memory also enters power-down mode when the device enters Stop mode. When the Flash memory is in power-down mode, an additional startup delay is incurred when waking up from Stop mode (see *Table 26: Stop operating modes (STM32F405xx/07xx and STM32F415xx/17xx)* and *Section 5.4.1: PWR power control register (PWR_CR) for STM32F405xx/07xx and STM32F415xx/17xx*).

Table 26. Stop operating modes (STM32F405xx/07xx and STM32F415xx/17xx)

Stop mode	LPDS bit	FPDS bit	Wake-up latency
STOP MR (Main regulator)	0	0	HSI RC startup time
STOP MR-FPD	0	1	HSI RC startup time + Flash wakeup time from Power Down mode
STOP LP	1	0	HSI RC startup time + regulator wakeup time from LP mode
STOP LP-FPD	1	1	HSI RC startup time + Flash wakeup time from Power Down mode + regulator wakeup time from LP mode

Entering Stop mode (for STM32F405xx/07xx and STM32F415xx/17xx)

The Stop mode is entered according to *Section : Entering low-power mode*, when the SLEEPDEEP bit in the Cortex®-M4 with FPU System Control register is set.

Refer to *Table 27* for details on how to enter the Stop mode.

To further reduce power consumption in Stop mode, the internal voltage regulator can be put in low-power mode. This is configured by the LPDS bit of the *PWR power control register (PWR_CR) for STM32F405xx/07xx and STM32F415xx/17xx* and *PWR power control register (PWR_CR) for STM32F42xxx and STM32F43xxx*.

If Flash memory programming is ongoing, the Stop mode entry is delayed until the memory access is finished.

If an access to the APB domain is ongoing, The Stop mode entry is delayed until the APB access is finished.

In Stop mode, the following features can be selected by programming individual control bits:

- Independent watchdog (IWDG): the IWDG is started by writing to its Key register or by hardware option. Once started it cannot be stopped except by a Reset. See *Section 21.3* in *Section 21: Independent watchdog (IWDG)*.
- Real-time clock (RTC): this is configured by the RTCEN bit in the *Section 7.3.20: RCC Backup domain control register (RCC_BDCR)*
- Internal RC oscillator (LSI RC): this is configured by the LSION bit in the *Section 7.3.21: RCC clock control & status register (RCC_CSR)*.
- External 32.768 kHz oscillator (LSE OSC): this is configured by the LSEON bit in the *Section 7.3.20: RCC Backup domain control register (RCC_BDCR)*.

The ADC or DAC can also consume power during the Stop mode, unless they are disabled before entering it. To disable them, the ADON bit in the ADC_CR2 register and the ENx bit in the DAC_CR register must both be written to 0.

Note: If the application needs to disable the external clock before entering Stop mode, the HSEON bit must first be disabled and the system clock switched to HSI.

Otherwise, if the HSEON bit is kept enabled while the external clock (external oscillator) can be removed before entering stop mode, the clock security system (CSS) feature must be enabled to detect any external oscillator failure and avoid a malfunction behavior when entering stop mode.

Exiting Stop mode (for STM32F405xx/07xx and STM32F415xx/17xx)

The Stop mode is exited according to *Section : Exiting low-power mode*.

Refer to *Table 27* for more details on how to exit Stop mode.

When exiting Stop mode by issuing an interrupt or a wakeup event, the HSI RC oscillator is selected as system clock.

When the voltage regulator operates in low-power mode, an additional startup delay is incurred when waking up from Stop mode. By keeping the internal regulator ON during Stop mode, the consumption is higher although the startup time is reduced.

Table 27. Stop mode entry and exit (for STM32F405xx/07xx and STM32F415xx/17xx)

Stop mode	Description
Mode entry	WFI (Wait for Interrupt) or WFE (Wait for Event) while: – No interrupt (for WFI) or event (for WFE) is pending, – SLEEPDEEP bit is set in Cortex®-M4 with FPU System Control register, – PDDS bit is cleared in Power Control register (PWR_CR), – Select the voltage regulator mode by configuring LPDS bit in PWR_CR.
	On Return from ISR: – No interrupt is pending, – SLEEPDEEP bit is set in Cortex®-M4 with FPU System Control register, – SLEEPONEXIT = 1, – PDDS bit is cleared in Power Control register (PWR_CR).
	Note: To enter Stop mode, all EXTI Line pending bits (in Pending register (EXTI_PR)), all peripheral interrupts pending bits, the RTC Alarm (Alarm A and Alarm B), RTC wakeup, RTC tamper, and RTC time stamp flags, must be reset. Otherwise, the Stop mode entry procedure is ignored and program execution continues.

Table 27. Stop mode entry and exit (for STM32F405xx/07xx and STM32F415xx/17xx)

Stop mode	Description
Mode exit	If WFI or Return from ISR was used for entry: Any EXTI lines configured in Interrupt mode (the corresponding EXTI Interrupt vector must be enabled in the NVIC). The interrupt source can be external interrupts or peripherals with wakeup capability. Refer to *Table 61: Vector table for STM32F405xx/07xx and STM32F415xx/17xx on page 372* and *Table 62: Vector table for STM32F42xxx and STM32F43xxx*. If WFE was used for entry and SEVONPEND = 0 Any EXTI lines configured in event mode. Refer to *Section 12.2.3: Wakeup event management on page 380*. If WFE was used for entry and SEVONPEND = 1: – Any EXTI lines configured in Interrupt mode (even if the corresponding EXTI Interrupt vector is disabled in the NVIC). The interrupt source can be an external interrupt or a peripheral with wakeup capability. Refer to *Table 61: Vector table for STM32F405xx/07xx and STM32F415xx/17xx on page 372* and *Table 62: Vector table for STM32F42xxx and STM32F43xxx*. – Wakeup event: refer to *Section 12.2.3: Wakeup event management on page 380*.
Wakeup latency	*Table 26: Stop operating modes (STM32F405xx/07xx and STM32F415xx/17xx)*

5.3.5 Stop mode (STM32F42xxx and STM32F43xxx)

The Stop mode is based on the Cortex®-M4 with FPU deepsleep mode combined with peripheral clock gating. The voltage regulator can be configured either in normal or low-power mode. In Stop mode, all clocks in the 1.2 V domain are stopped, the PLLs, the HSI and the HSE RC oscillators are disabled. Internal SRAM and register contents are preserved.

In Stop mode, the power consumption can be further reduced by using additional settings in the PWR_CR register. However this will induce an additional startup delay when waking up from Stop mode (see *Table 28*).

Table 28. Stop operating modes (STM32F42xxx and STM32F43xxx)

Voltage Regulator Mode		UDEN[1:0] bits	MRUDS bit	LPUDS bit	LPDS bit	FPDS bit	Wakeup latency
Normal mode	STOP MR (Main Regulator)	-	0	-	0	0	HSI RC startup time
	STOP MR- FPD	-	0	-	0	1	HSI RC startup time + Flash wakeup time from power-down mode
	STOP LP	-	0	0	1	0	HSI RC startup time + regulator wakeup time from LP mode
	STOP LP-FPD	-	-	0	1	1	HSI RC startup time + Flash wakeup time from power-down mode + regulator wakeup time from LP mode
Under-drive Mode	STOP UMR-FPD	3	1	-	0	-	HSI RC startup time + Flash wakeup time from power-down mode + Main regulator wakeup time from under-drive mode + Core logic to nominal mode
	STOP ULP-FPD	3	-	1	1	-	HSI RC startup time + Flash wakeup time from power-down mode + regulator wakeup time from LP under-drive mode + Core logic to nominal mode

Entering Stop mode (STM32F42xxx and STM32F43xxx)

The Stop mode is entered according to *Section : Entering low-power mode*, when the SLEEPDEEP bit in the Cortex®-M4 with FPU System Control register is set.

Refer to *Table 29* for details on how to enter the Stop mode.

When the microcontroller enters in Stop mode, the voltage scale 3 is automatically selected. To further reduce power consumption in Stop mode, the internal voltage regulator can be put in low voltage mode. This is configured by the LPDS, MRUDS, LPUDS and UDEN bits of the *PWR power control register (PWR_CR) for STM32F405xx/07xx and STM32F415xx/17xx*.

If Flash memory programming is ongoing, the Stop mode entry is delayed until the memory access is finished.

If an access to the APB domain is ongoing, The Stop mode entry is delayed until the APB access is finished.

If the Over-drive mode was enabled before entering Stop mode, it is automatically disabled during when the Stop mode is activated.

In Stop mode, the following features can be selected by programming individual control bits:

- Independent watchdog (IWDG): the IWDG is started by writing to its Key register or by hardware option. Once started it cannot be stopped except by a Reset. See *Section 21.3* in *Section 21: Independent watchdog (IWDG)*.
- Real-time clock (RTC): this is configured by the RTCEN bit in the *Section 7.3.20: RCC Backup domain control register (RCC_BDCR)*
- Internal RC oscillator (LSI RC): this is configured by the LSION bit in the *Section 7.3.21: RCC clock control & status register (RCC_CSR)*.
- External 32.768 kHz oscillator (LSE OSC): this is configured by the LSEON bit in the *RCC Backup domain control register (RCC_BDCR)*.

The ADC or DAC can also consume power during the Stop mode, unless they are disabled before entering it. To disable them, the ADON bit in the ADC_CR2 register and the ENx bit in the DAC_CR register must both be written to 0.

Note: Before entering Stop mode, it is recommended to enable the clock security system (CSS) feature to prevent external oscillator (HSE) failure from impacting the internal MCU behavior.

Exiting Stop mode (STM32F42xxx and STM32F43xxx)

The Stop mode is exited according to *Section : Exiting low-power mode*.

Refer to *Table 29* for more details on how to exit Stop mode.

When exiting Stop mode by issuing an interrupt or a wakeup event, the HSI RC oscillator is selected as system clock.

If the Under-drive mode was enabled, it is automatically disabled after exiting Stop mode.

When the voltage regulator operates in low voltage mode, an additional startup delay is incurred when waking up from Stop mode. By keeping the internal regulator ON during Stop mode, the consumption is higher although the startup time is reduced.

When the voltage regulator operates in Under-drive mode, an additional startup delay is induced when waking up from Stop mode.

Table 29. Stop mode entry and exit (STM32F42xxx and STM32F43xxx)

Stop mode	Description
Mode entry	WFI (Wait for Interrupt) or WFE (Wait for Event) while: – No interrupt or event is pending, – SLEEPDEEP bit is set in Cortex®-M4 with FPU System Control register, – PDDS bit is cleared in Power Control register (PWR_CR), – Select the voltage regulator mode by configuring LPDS, MRUDS, LPUDS and UDEN bits in PWR_CR (see *Table 28: Stop operating modes (STM32F42xxx and STM32F43xxx)*).
	On Return from ISR while: – No interrupt is pending, – SLEEPDEEP bit is set in Cortex®-M4 with FPU System Control register, and – SLEEPONEXIT = 1, and – PDDS is cleared in PWR_CR1.
	Note: To enter Stop mode, all EXTI Line pending bits (in Pending register (EXTI_PR)), all peripheral interrupts pending bits, the RTC Alarm (Alarm A and Alarm B), RTC wakeup, RTC tamper, and RTC time stamp flags, must be reset. Otherwise, the Stop mode entry procedure is ignored and program execution continues.
Mode exit	If WFI or Return from ISR was used for entry: All EXTI lines configured in Interrupt mode (the corresponding EXTI Interrupt vector must be enabled in the NVIC). The interrupt source can be external interrupts or peripherals with wakeup capability. Refer to *Table 61: Vector table for STM32F405xx/07xx and STM32F415xx/17xx on page 372*. If WFE was used for entry and SEVONPEND = 0: All EXTI Lines configured in event mode. Refer to *Section 12.2.3: Wakeup event management on page 380* If WFE was used for entry and SEVONPEND = 1: – Any EXTI lines configured in Interrupt mode (even if the corresponding EXTI Interrupt vector is disabled in the NVIC). The interrupt source can be external interrupts or peripherals with wakeup capability. Refer to *Table 61: Vector table for STM32F405xx/07xx and STM32F415xx/17xx on page 372* and *Table 62: Vector table for STM32F42xxx and STM32F43xxx*. – Wakeup event: refer to *Section 12.2.3: Wakeup event management on page 380*.
Wakeup latency	Refer to *Table 28: Stop operating modes (STM32F42xxx and STM32F43xxx)*

5.3.6 Standby mode

The Standby mode allows to achieve the lowest power consumption. It is based on the Cortex®-M4 with FPU deepsleep mode, with the voltage regulator disabled. The 1.2 V domain is consequently powered off. The PLLs, the HSI oscillator and the HSE oscillator are also switched off. SRAM and register contents are lost except for registers in the backup domain (RTC registers, RTC backup register and backup SRAM), and Standby circuitry (see *Figure 9*).

Entering Standby mode

The Standby mode is entered according to *Section : Entering low-power mode*, when the SLEEPDEEP bit in the Cortex®-M4 with FPU System Control register is set.

Refer to *Table 30* for more details on how to enter Standby mode.

In Standby mode, the following features can be selected by programming individual control bits:

- Independent watchdog (IWDG): the IWDG is started by writing to its Key register or by hardware option. Once started it cannot be stopped except by a reset. See *Section 21.3* in *Section 21: Independent watchdog (IWDG)*.
- Real-time clock (RTC): this is configured by the RTCEN bit in the backup domain control register (RCC_BDCR)
- Internal RC oscillator (LSI RC): this is configured by the LSION bit in the Control/status register (RCC_CSR).
- External 32.768 kHz oscillator (LSE OSC): this is configured by the LSEON bit in the backup domain control register (RCC_BDCR)

Exiting Standby mode

The Standby mode is exited according to *Section : Exiting low-power mode*. The SBF status flag in PWR_CR (see *Section 5.4.2: PWR power control/status register (PWR_CSR) for STM32F405xx/07xx and STM32F415xx/17xx*) indicates that the MCU was in Standby mode. All registers are reset after wakeup from Standby except for PWR_CR.

Refer to *Table 30* for more details on how to exit Standby mode.

Table 30. Standby mode entry and exit

Standby mode	Description
Mode entry	WFI (Wait for Interrupt) or WFE (Wait for Event) while: – SLEEPDEEP is set in Cortex®-M4 with FPU System Control register, – PDDS bit is set in Power Control register (PWR_CR), – No interrupt (for WFI) or event (for WFE) is pending, – WUF bit is cleared in Power Control register (PWR_CR), – the RTC flag corresponding to the chosen wakeup source (RTC Alarm A, RTC Alarm B, RTC wakeup, Tamper or Timestamp flags) is cleared
	On return from ISR while: – SLEEPDEEP bit is set in Cortex®-M4 with FPU System Control register, and – SLEEPONEXIT = 1, and – PDDS bit is set in Power Control register (PWR_CR), and – No interrupt is pending, – WUF bit is cleared in Power Control/Status register (PWR_SR), – The RTC flag corresponding to the chosen wakeup source (RTC Alarm A, RTC Alarm B, RTC wakeup, Tamper or Timestamp flags) is cleared.
Mode exit	WKUP pin rising edge, RTC alarm (Alarm A and Alarm B), RTC wakeup, tamper event, time stamp event, external reset in NRST pin, IWDG reset.
Wakeup latency	Reset phase.

I/O states in Standby mode

In Standby mode, all I/O pins are high impedance except for:

- Reset pad (still available)
- RTC_AF1 pin (PC13) if configured for tamper, time stamp, RTC Alarm out, or RTC clock calibration out
- WKUP pin (PA0), if enabled

Debug mode

By default, the debug connection is lost if the application puts the MCU in Stop or Standby mode while the debug features are used. This is due to the fact that the Cortex®-M4 with FPU core is no longer clocked.

However, by setting some configuration bits in the DBGMCU_CR register, the software can be debugged even when using the low-power modes extensively. For more details, refer to *Section 38.16.1: Debug support for low-power modes*.

5.3.7 Programming the RTC alternate functions to wake up the device from the Stop and Standby modes

The MCU can be woken up from a low-power mode by an RTC alternate function.

The RTC alternate functions are the RTC alarms (Alarm A and Alarm B), RTC wakeup, RTC tamper event detection and RTC time stamp event detection.

These RTC alternate functions can wake up the system from the Stop and Standby low-power modes.

The system can also wake up from low-power modes without depending on an external interrupt (Auto-wakeup mode), by using the RTC alarm or the RTC wakeup events.

The RTC provides a programmable time base for waking up from the Stop or Standby mode at regular intervals.

For this purpose, two of the three alternate RTC clock sources can be selected by programming the RTCSEL[1:0] bits in the *Section 7.3.20: RCC Backup domain control register (RCC_BDCR)*:

- Low-power 32.768 kHz external crystal oscillator (LSE OSC)
  This clock source provides a precise time base with a very low-power consumption (additional consumption of less than 1 µA under typical conditions)
- Low-power internal RC oscillator (LSI RC)
  This clock source has the advantage of saving the cost of the 32.768 kHz crystal. This internal RC oscillator is designed to use minimum power.

RTC alternate functions to wake up the device from the Stop mode

- To wake up the device from the Stop mode with an RTC alarm event, it is necessary to:
  a) Configure the EXTI Line 17 to be sensitive to rising edges (Interrupt or Event modes)
  b) Enable the RTC Alarm Interrupt in the RTC_CR register
  c) Configure the RTC to generate the RTC alarm
- To wake up the device from the Stop mode with an RTC tamper or time stamp event, it is necessary to:
  a) Configure the EXTI Line 21 to be sensitive to rising edges (Interrupt or Event modes)
  b) Enable the RTC time stamp Interrupt in the RTC_CR register or the RTC tamper interrupt in the RTC_TAFCR register
  c) Configure the RTC to detect the tamper or time stamp event
- To wake up the device from the Stop mode with an RTC wakeup event, it is necessary to:
  a) Configure the EXTI Line 22 to be sensitive to rising edges (Interrupt or Event modes)
  b) Enable the RTC wakeup interrupt in the RTC_CR register
  c) Configure the RTC to generate the RTC Wakeup event

RTC alternate functions to wake up the device from the Standby mode

- To wake up the device from the Standby mode with an RTC alarm event, it is necessary to:
  a) Enable the RTC alarm interrupt in the RTC_CR register
  b) Configure the RTC to generate the RTC alarm
- To wake up the device from the Standby mode with an RTC tamper or time stamp event, it is necessary to:
  a) Enable the RTC time stamp interrupt in the RTC_CR register or the RTC tamper interrupt in the RTC_TAFCR register
  b) Configure the RTC to detect the tamper or time stamp event
- To wake up the device from the Standby mode with an RTC wakeup event, it is necessary to:
  a) Enable the RTC wakeup interrupt in the RTC_CR register
  b) Configure the RTC to generate the RTC wakeup event

Safe RTC alternate function wakeup flag clearing sequence

If the selected RTC alternate function is set before the PWR wakeup flag (WUTF) is cleared, it will not be detected on the next event as detection is made once on the rising edge.

To avoid bouncing on the pins onto which the RTC alternate functions are mapped, and exit correctly from the Stop and Standby modes, it is recommended to follow the sequence below before entering the Standby mode:

- When using RTC alarm to wake up the device from the low-power modes:
  a) Disable the RTC alarm interrupt (ALRAIE or ALRBIE bits in the RTC_CR register)
  b) Clear the RTC alarm (ALRAF/ALRBF) flag

c) Clear the PWR Wakeup (WUF) flag
d) Enable the RTC alarm interrupt
e) Re-enter the low-power mode

- When using RTC wakeup to wake up the device from the low-power modes:
  a) Disable the RTC Wakeup interrupt (WUTIE bit in the RTC_CR register)
  b) Clear the RTC Wakeup (WUTF) flag
  c) Clear the PWR Wakeup (WUF) flag
  d) Enable the RTC Wakeup interrupt
  e) Re-enter the low-power mode
- When using RTC tamper to wake up the device from the low-power modes:
  a) Disable the RTC tamper interrupt (TAMPIE bit in the RTC_TAFCR register)
  b) Clear the Tamper (TAMP1F/TSF) flag
  c) Clear the PWR Wakeup (WUF) flag
  d) Enable the RTC tamper interrupt
  e) Re-enter the low-power mode
- When using RTC time stamp to wake up the device from the low-power modes:
  a) Disable the RTC time stamp interrupt (TSIE bit in RTC_CR)
  b) Clear the RTC time stamp (TSF) flag
  c) Clear the PWR Wakeup (WUF) flag
  d) Enable the RTC TimeStamp interrupt
  e) Re-enter the low-power mode

5.4 Power control registers (STM32F405xx/07xx and STM32F415xx/17xx)

5.4.1 PWR power control register (PWR_CR) for STM32F405xx/07xx and STM32F415xx/17xx

Address offset: 0x00

Reset value: 0x0000 4000 (reset by wakeup from Standby mode)

31	30	29	28	27	26	25	24	23	22	21	20	19	18	17	16
Reserved															
15	14	13	12	11	10	9	8	7	6	5	4	3	2	1	0
Res.	VOS	Reserved				FPDS	DBP	PLS[2:0]			PVDE	CSBF	CWUF	PDDS	LPDS
	rw					rw	rw	rw	rw	rw	rw	w	w	rw	rw

Bits 31:15 Reserved, must be kept at reset value.

Bit 14 **VOS**: Regulator voltage scaling output selection

This bit controls the main internal voltage regulator output voltage to achieve a trade-off between performance and power consumption when the device does not operate at the maximum frequency.

0: Scale 2 mode

1: Scale 1 mode (default value at reset)

Bits 13:10 Reserved, must be kept at reset value.

Bit 9 **FPDS**: Flash power-down in Stop mode

When set, the Flash memory enters power-down mode when the device enters Stop mode. This allows to achieve a lower consumption in stop mode but a longer restart time.

0: Flash memory not in power-down when the device is in Stop mode

1: Flash memory in power-down when the device is in Stop mode

Bit 8 **DBP**: Disable backup domain write protection

In reset state, the RCC_BDCR register, the RTC registers (including the backup registers), and the BRE bit of the PWR_CSR register, are protected against parasitic write access. This bit must be set to enable write access to these registers.

0: Access to RTC and RTC Backup registers and backup SRAM disabled

1: Access to RTC and RTC Backup registers and backup SRAM enabled

Bits 7:5 **PLS[2:0]:** PVD level selection

These bits are written by software to select the voltage threshold detected by the Power Voltage Detector

000: 2.0 V

001: 2.1 V

010: 2.3 V

011: 2.5 V

100: 2.6 V

101: 2.7 V

110: 2.8 V

111: 2.9 V

Note: Refer to the electrical characteristics of the datasheet for more details.

Bit 4 **PVDE:** Power voltage detector enable
This bit is set and cleared by software.
0: PVD disabled
1: PVD enabled

Bit 3 **CSBF**: Clear standby flag
This bit is always read as 0.
0: No effect
1: Clear the SBF Standby Flag (write).

Bit 2 **CWUF:** Clear wakeup flag
This bit is always read as 0.
0: No effect
1: Clear the WUF Wakeup Flag **after 2 System clock cycles**

Bit 1 **PDDS**: Power-down deepsleep
This bit is set and cleared by software. It works together with the LPDS bit.
0: Enter Stop mode when the CPU enters deepsleep. The regulator status depends on the LPDS bit.
1: Enter Standby mode when the CPU enters deepsleep.

Bit 0 **LPDS:** Low-power deepsleep
This bit is set and cleared by software. It works together with the PDDS bit.
0: Voltage regulator on during Stop mode
1: Voltage regulator in low-power mode during Stop mode

5.4.2 PWR power control/status register (PWR_CSR) for STM32F405xx/07xx and STM32F415xx/17xx

Address offset: 0x04

Reset value: 0x0000 0000 (not reset by wakeup from Standby mode)

Additional APB cycles are needed to read this register versus a standard APB read.

31	30	29	28	27	26	25	24	23	22	21	20	19	18	17	16
Reserved															
15	14	13	12	11	10	9	8	7	6	5	4	3	2	1	0
Res	VOS RDY	Reserved				BRE	EWUP	Reserved				BRR	PVDO	SBF	WUF
	r					rw	rw					r	r	r	r

Bits 31:15 Reserved, must be kept at reset value.

Bit 14 **VOSRDY**: Regulator voltage scaling output selection ready bit
0: Not ready
1: Ready

Bits 13:10 Reserved, must be kept at reset value.

Bit 9 **BRE**: Backup regulator enable

When set, the Backup regulator (used to maintain backup SRAM content in Standby and V_{BAT} modes) is enabled. If BRE is reset, the backup regulator is switched off. The backup SRAM can still be used but its content will be lost in the Standby and V_{BAT} modes. Once set, the application must wait that the Backup Regulator Ready flag (BRR) is set to indicate that the data written into the RAM will be maintained in the Standby and V_{BAT} modes.

0: Backup regulator disabled

1: Backup regulator enabled

Note: This bit is not reset when the device wakes up from Standby mode, by a system reset, or by a power reset.

Bit 8 **EWUP**: Enable WKUP pin

This bit is set and cleared by software.

0: WKUP pin is used for general purpose I/O. An event on the WKUP pin does not wakeup the device from Standby mode.

1: WKUP pin is used for wakeup from Standby mode and forced in input pull down configuration (rising edge on WKUP pin wakes-up the system from Standby mode).

Note: This bit is reset by a system reset.

Bits 7:4 Reserved, must be kept at reset value.

Bit 3 **BRR**: Backup regulator ready

Set by hardware to indicate that the Backup Regulator is ready.

0: Backup Regulator not ready

1: Backup Regulator ready

Note: This bit is not reset when the device wakes up from Standby mode or by a system reset or power reset.

Bit 2 **PVDO:** PVD output

This bit is set and cleared by hardware. It is valid only if PVD is enabled by the PVDE bit.

0: V_{DD} is higher than the PVD threshold selected with the PLS[2:0] bits.

1: V_{DD} is lower than the PVD threshold selected with the PLS[2:0] bits.

Note: The PVD is stopped by Standby mode. For this reason, this bit is equal to 0 after Standby or reset until the PVDE bit is set.

Bit 1 **SBF:** Standby flag

This bit is set by hardware and cleared only by a POR/PDR (power-on reset/power-down reset) or by setting the CSBF bit in the PWR_CR register.

0: Device has not been in Standby mode

1: Device has been in Standby mode

Bit 0 **WUF:** Wakeup flag

This bit is set by hardware and cleared either by a system reset or by setting the CWUF bit in the PWR_CR register.

0: No wakeup event occurred

1: A wakeup event was received from the WKUP pin or from the RTC alarm (Alarm A or Alarm B), RTC Tamper event, RTC TimeStamp event or RTC Wakeup).

Note: An additional wakeup event is detected if the WKUP pin is enabled (by setting the EWUP bit) when the WKUP pin level is already high.

5.5 Power control registers (STM32F42xxx and STM32F43xxx)

5.5.1 PWR power control register (PWR_CR) for STM32F42xxx and STM32F43xxx

Address offset: 0x00

Reset value: 0x0000 C000 (reset by wakeup from Standby mode)

31	30	29	28	27	26	25	24	23	22	21	20	19	18	17	16
Reserved												UDEN[1:0]		ODSWEN	ODEN
												rw	rw	rw	rw

15	14	13	12	11	10	9	8	7	6	5	4	3	2	1	0
VOS[1:0]		ADCDC1	Res.	MRUDS	LPUDS	FPDS	DBP	PLS[2:0]			PVDE	CSBF	CWUF	PDDS	LPDS
rw	rw	rw		rw	rw	rw	rw	rw	rw	rw	rw	rc_w1	rc_w1	rw	rw

Bits 31:20 Reserved, must be kept at reset value.

Bits 19:18 **UDEN[1:0]**: Under-drive enable in stop mode

These bits are set by software. They allow to achieve a lower power consumption in Stop mode but with a longer wakeup time.

When set, the digital area has less leakage consumption when the device enters Stop mode.

00: Under-drive disable

01: Reserved

10: Reserved

11:Under-drive enable

Bit 17 **ODSWEN**: Over-drive switching enabled.

This bit is set by software. It is cleared automatically by hardware after exiting from Stop mode or when the ODEN bit is reset. When set, It is used to switch to Over-drive mode.

To set or reset the ODSWEN bit, the HSI or HSE must be selected as system clock.

The ODSWEN bit must only be set when the ODRDY flag is set to switch to Over-drive mode.

0: Over-drive switching disabled

1: Over-drive switching enabled

Note: On any over-drive switch (enabled or disabled), the system clock will be stalled during the internal voltage set up.

Bit 16 **ODEN**: Over-drive enable

This bit is set by software. It is cleared automatically by hardware after exiting from Stop mode. It is used to enabled the Over-drive mode in order to reach a higher frequency.

To set or reset the ODEN bit, the HSI or HSE must be selected as system clock. When the ODEN bit is set, the application must first wait for the Over-drive ready flag (ODRDY) to be set before setting the ODSWEN bit.

0: Over-drive disabled

1: Over-drive enabled

Bits 15:14 **VOS[1:0]**: Regulator voltage scaling output selection

These bits control the main internal voltage regulator output voltage to achieve a trade-off between performance and power consumption when the device does not operate at the maximum frequency (refer to the STM32F42xx and STM32F43xx datasheets for more details).

These bits can be modified only when the PLL is OFF. The new value programmed is active only when the PLL is ON. When the PLL is OFF, the voltage scale 3 is automatically selected.

00: Reserved (Scale 3 mode selected)

01: Scale 3 mode

10: Scale 2 mode

11: Scale 1 mode (reset value)

Bit 13 **ADCDC1**:

0: No effect.

1: Refer to AN4073 for details on how to use this bit.

Note: This bit can only be set when operating at supply voltage range 2.7 to 3.6V and when the Prefetch is OFF.

Bit 12 Reserved, must be kept at reset value.

Bit 11 **MRUDS**: Main regulator in deepsleep under-drive mode

This bit is set and cleared by software.

0: Main regulator ON when the device is in Stop mode

1: Main Regulator in under-drive mode and Flash memory in power-down when the device is in Stop under-drive mode.

Bit 10 **LPUDS**: Low-power regulator in deepsleep under-drive mode

This bit is set and cleared by software.

0: Low-power regulator ON if LPDS bit is set when the device is in Stop mode

1: Low-power regulator in under-drive mode if LPDS bit is set and Flash memory in power-down when the device is in Stop under-drive mode.

Bit 9 **FPDS**: Flash power-down in Stop mode

When set, the Flash memory enters power-down mode when the device enters Stop mode. This allows to achieve a lower consumption in stop mode but a longer restart time.

0: Flash memory not in power-down when the device is in Stop mode

1: Flash memory in power-down when the device is in Stop mode

Bit 8 **DBP**: Disable backup domain write protection

In reset state, the RCC_BDCR register, the RTC registers (including the backup registers), and the BRE bit of the PWR_CSR register, are protected against parasitic write access. This bit must be set to enable write access to these registers.

0: Access to RTC and RTC Backup registers and backup SRAM disabled

1: Access to RTC and RTC Backup registers and backup SRAM enabled

Bits 7:5 **PLS[2:0]:** PVD level selection

These bits are written by software to select the voltage threshold detected by the Power Voltage Detector

000: 2.0 V
001: 2.1 V
010: 2.3 V
011: 2.5 V
100: 2.6 V
101: 2.7 V
110: 2.8 V
111: 2.9 V

Note: Refer to the electrical characteristics of the datasheet for more details.

Bit 4 **PVDE:** Power voltage detector enable

This bit is set and cleared by software.

0: PVD disabled
1: PVD enabled

Bit 3 **CSBF**: Clear standby flag

This bit is always read as 0.

0: No effect
1: Clear the SBF Standby Flag (write).

Bit 2 **CWUF:** Clear wakeup flag

This bit is always read as 0.

0: No effect
1: Clear the WUF Wakeup Flag **after 2 System clock cycles**

Bit 1 **PDDS**: Power-down deepsleep

This bit is set and cleared by software. It works together with the LPDS bit.

0: Enter Stop mode when the CPU enters deepsleep. The regulator status depends on the LPDS bit.
1: Enter Standby mode when the CPU enters deepsleep.

Bit 0 **LPDS:** Low-power deepsleep

This bit is set and cleared by software. It works together with the PDDS bit.

0:Main voltage regulator ON during Stop mode
1: Low-power voltage regulator ON during Stop mode

5.5.2 PWR power control/status register (PWR_CSR) for STM32F42xxx and STM32F43xxx

Address offset: 0x04

Reset value: 0x0000 0000 (not reset by wakeup from Standby mode)

Additional APB cycles are needed to read this register versus a standard APB read.

31	30	29	28	27	26	25	24	23	22	21	20	19	18	17	16
Reserved												UDRDY[1:0]		ODSWRDY	ODRDY
												rc_w1	rc_w1	r	r

15	14	13	12	11	10	9	8	7	6	5	4	3	2	1	0
Res	VOS RDY	Reserved				BRE	EWUP	Reserved.				BRR	PVDO	SBF	WUF
	r					rw	rw					r	r	r	r

Bits 31:20 Reserved, must be kept at reset value.

Bits 19:18 **UDRDY[1:0]**: Under-drive ready flag

These bits are set by hardware when MCU entered stop Under-drive mode and exited. When the under-drive mode is enabled, these bits are not set as long as the MCU has not entered stop mode yet. They are cleared by programming them to 1.

00: Under-drive is disabled

01: Reserved

10: Reserved

11:Under-drive mode is activated in Stop mode.

Bit 17 **ODSWRDY**: Over-drive mode switching ready

0: Over-drive mode is not active.

1: Over-drive mode is active on digital area on 1.2 V domain

Bit 16 **ODRDY**: Over-drive mode ready

0: Over-drive mode not ready.

1: Over-drive mode ready

Bit 14 **VOSRDY**: Regulator voltage scaling output selection ready bit

0: Not ready

1: Ready

Bits 13:10 Reserved, must be kept at reset value.

Bit 9 **BRE**: Backup regulator enable

When set, the Backup regulator (used to maintain backup SRAM content in Standby and V_{BAT} modes) is enabled. If BRE is reset, the backup regulator is switched off. The backup SRAM can still be used but its content will be lost in the Standby and V_{BAT} modes. Once set, the application must wait that the Backup Regulator Ready flag (BRR) is set to indicate that the data written into the RAM will be maintained in the Standby and V_{BAT} modes.

0: Backup regulator disabled

1: Backup regulator enabled

Note: This bit is not reset when the device wakes up from Standby mode, by a system reset, or by a power reset.

Bit 8 **EWUP**: Enable WKUP pin

This bit is set and cleared by software.

0: WKUP pin is used for general purpose I/O. An event on the WKUP pin does not wakeup the device from Standby mode.

1: WKUP pin is used for wakeup from Standby mode and forced in input pull down configuration (rising edge on WKUP pin wakes-up the system from Standby mode).

Note: This bit is reset by a system reset.

Bits 7:4 Reserved, must be kept at reset value.

Bit 3 **BRR**: Backup regulator ready

Set by hardware to indicate that the Backup Regulator is ready.

0: Backup Regulator not ready

1: Backup Regulator ready

Note: This bit is not reset when the device wakes up from Standby mode or by a system reset or power reset.

Bit 2 **PVDO:** PVD output

This bit is set and cleared by hardware. It is valid only if PVD is enabled by the PVDE bit.

0: V_{DD} is higher than the PVD threshold selected with the PLS[2:0] bits.

1: V_{DD} is lower than the PVD threshold selected with the PLS[2:0] bits.

Note: The PVD is stopped by Standby mode. For this reason, this bit is equal to 0 after Standby or reset until the PVDE bit is set.

Bit 1 **SBF:** Standby flag

This bit is set by hardware and cleared only by a POR/PDR (power-on reset/power-down reset) or by setting the CSBF bit in the *PWR power control register (PWR_CR) for STM32F405xx/07xx and STM32F415xx/17xx*

0: Device has not been in Standby mode

1: Device has been in Standby mode

Bit 0 **WUF:** Wakeup flag

This bit is set by hardware and cleared either by a system reset or by setting the CWUF bit in the PWR_CR register.

0: No wakeup event occurred

1: A wakeup event was received from the WKUP pin or from the RTC alarm (Alarm A or Alarm B), RTC Tamper event, RTC TimeStamp event or RTC Wakeup).

Note: An additional wakeup event is detected if the WKUP pin is enabled (by setting the EWUP bit) when the WKUP pin level is already high.

5.6 PWR register map

The following table summarizes the PWR registers.

Table 31. PWR - register map and reset values for STM32F405xx/07xx and STM32F415xx/17xx

Offset	Register	31	30	29	28	27	26	25	24	23	22	21	20	19	18	17	16	15	14	13	12	11	10	9	8	7	6	5	4	3	2	1	0
0x000	**PWR_CR**	Reserved																	VOS	Reserved				FPDS	DBP	PLS[2:0]			PVDE	CSBF	CWUF	PDDS	LPDS
	Reset value																		1					0	0	0	0	0	0	0	0	0	0
0x004	**PWR_CSR**	Reserved																	VOSRDY	Reserved				BRE	EWUP	Reserved				BRR	PVDO	SBF	WUF
	Reset value																		0					0	0					0	0	0	0

Table 32. PWR - register map and reset values for STM32F42xxx and STM32F43xxx

Offset	Register	31	30	29	28	27	26	25	24	23	22	21	20	19	18	17	16	15	14	13	12	11	10	9	8	7	6	5	4	3	2	1	0
0x000	PWR_CR	Reserved												UDEN[1:0]		ODSWEN	ODEN	VOS[1:0]		ADCDC1	Reserved	MRUDS	LPUDS	FPDS	DBP	PLS[2:0]			PVDE	CSBF	CWUF	PDDS	LPDS
	Reset value													1	1	1	1	1	1	0		1	1	0	0	0	0	0	0	0	0	0	0
0x004	PWR_CSR	Reserved												UDRDY[1:0]		ODSWRDY	ODRDY	Reserved	VOSRDY	Reserved				BRE	EWUP	Reserved				BRR	PVDO	SBF	WUF
	Reset value													0	0	0	0		0					0	0					0	0	0	0

Refer to *Section 2.3: Memory map*for the register boundary addresses.

6 Reset and clock control for STM32F42xxx and STM32F43xxx (RCC)

6.1 Reset

There are three types of reset, defined as system Reset, power Reset and backup domain Reset.

6.1.1 System reset

A system reset sets all registers to their reset values except the reset flags in the clock controller CSR register and the registers in the Backup domain (see *Figure 15*).

A system reset is generated when one of the following events occurs:

1. A low level on the NRST pin (external reset)
2. Window watchdog end of count condition (WWDG reset)
3. Independent watchdog end of count condition (IWDG reset)
4. A software reset (SW reset) (see *Software reset*)
5. Low-power management reset (see *Low-power management reset*)

Software reset

The reset source can be identified by checking the reset flags in the *RCC clock control & status register (RCC_CSR)*.

The SYSRESETREQ bit in Cortex®-M4 with FPU Application Interrupt and Reset Control Register must be set to force a software reset on the device. Refer to the Cortex®-M4 with FPU technical reference manual for more details.

Low-power management reset

There are two ways of generating a low-power management reset:

1. Reset generated when entering the Standby mode:

   This type of reset is enabled by resetting the nRST_STDBY bit in the user option bytes. In this case, whenever a Standby mode entry sequence is successfully executed, the device is reset instead of entering the Standby mode.
2. Reset when entering the Stop mode:

   This type of reset is enabled by resetting the nRST_STOP bit in the user option bytes. In this case, whenever a Stop mode entry sequence is successfully executed, the device is reset instead of entering the Stop mode.

6.1.2 Power reset

A power reset is generated when one of the following events occurs:

1. Power-on/power-down reset (POR/PDR reset) or brownout (BOR) reset
2. When exiting the Standby mode

A power reset sets all registers to their reset values except the Backup domain (see *Figure 15*)

These sources act on the NRST pin and it is always kept low during the delay phase. The RESET service routine vector is fixed at address 0x0000_0004 in the memory map.

The system reset signal provided to the device is output on the NRST pin. The pulse generator guarantees a minimum reset pulse duration of 20 µs for each internal reset source. In case of an external reset, the reset pulse is generated while the NRST pin is asserted low.

Figure 15. Simplified diagram of the reset circuit

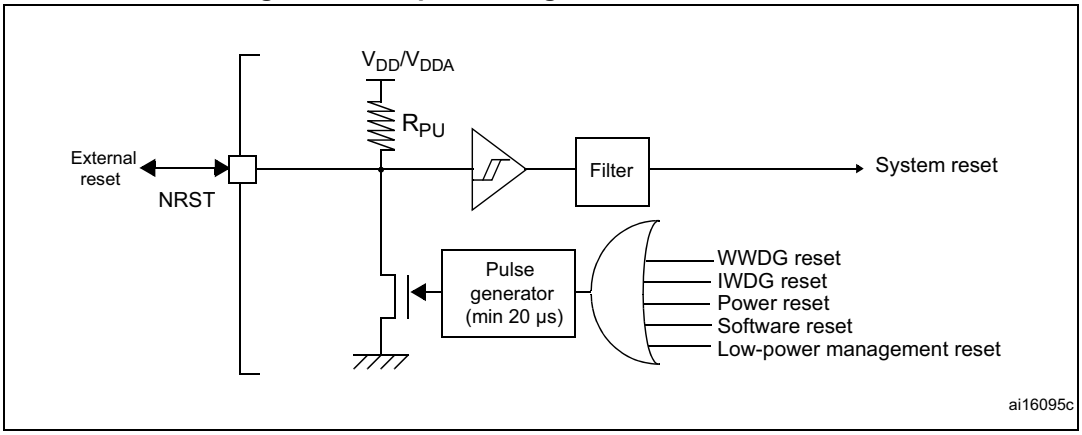

The Backup domain has two specific resets that affect only the Backup domain (see *Figure 15*).

6.1.3 Backup domain reset

The backup domain reset sets all RTC registers and the RCC_BDCR register to their reset values. The BKPSRAM is not affected by this reset. The only way of resetting the BKPSRAM is through the Flash interface by requesting a protection level change from 1 to 0.

A backup domain reset is generated when one of the following events occurs:

1. Software reset, triggered by setting the BDRST bit in the *RCC Backup domain control register (RCC_BDCR)*.
2. V_{DD} or V_{BAT} power on, if both supplies have previously been powered off.

6.2 Clocks

Three different clock sources can be used to drive the system clock (SYSCLK):

- HSI oscillator clock
- HSE oscillator clock
- Main PLL (PLL) clock

The devices have the two following secondary clock sources:

- 32 kHz low-speed internal RC (LSI RC) which drives the independent watchdog and, optionally, the RTC used for Auto-wakeup from the Stop/Standby mode.
- 32.768 kHz low-speed external crystal (LSE crystal) which optionally drives the RTC clock (RTCCLK)

Each clock source can be switched on or off independently when it is not used, to optimize power consumption.

Figure 16. Clock tree

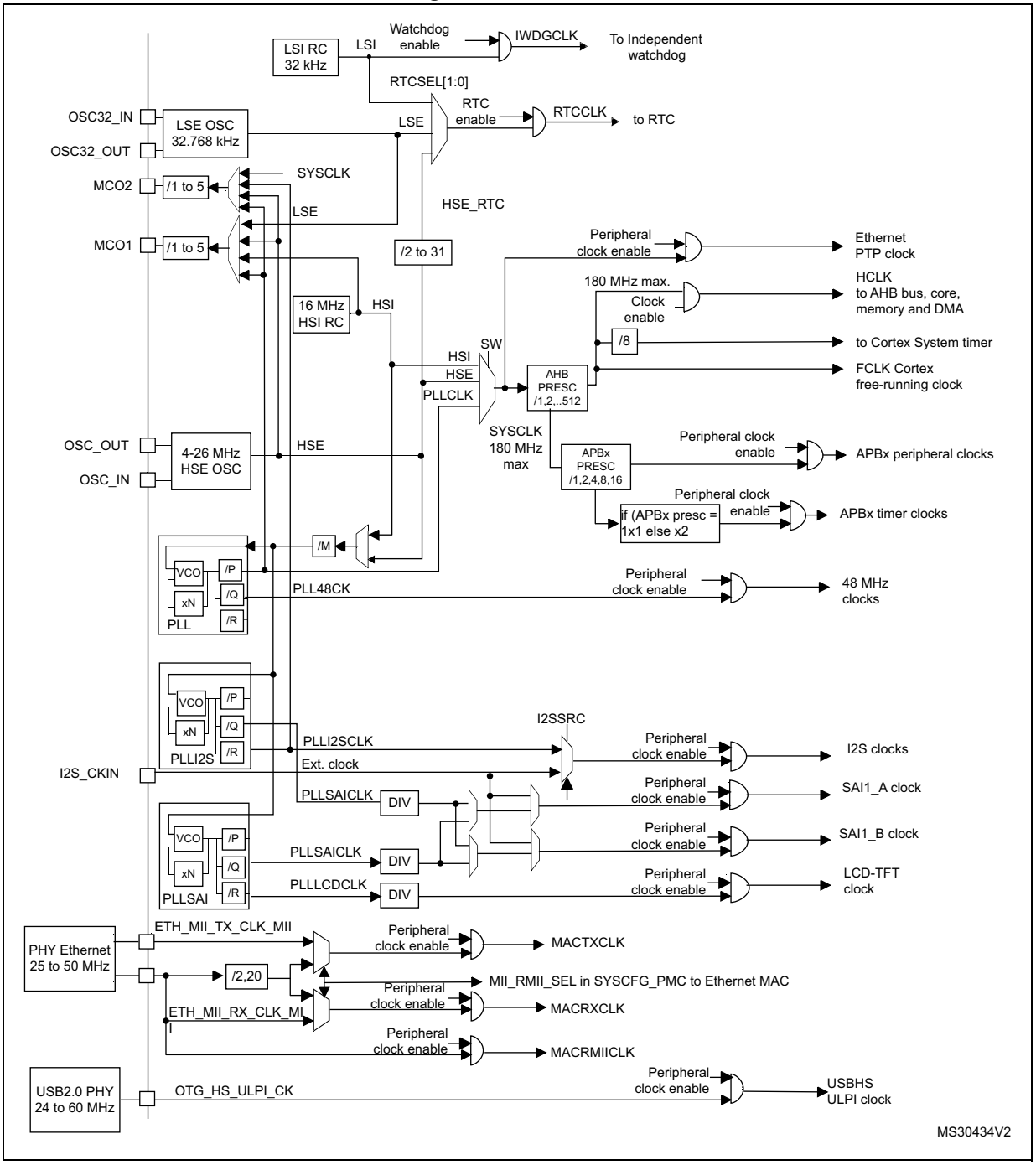

1. For full details about the internal and external clock source characteristics, refer to the Electrical characteristics section in the device datasheet.
2. When TIMPRE bit of the RCC_DCKCFGR register is reset, if APBx prescaler is 1, then TIMxCLK = PCLKx, otherwise TIMxCLK = 2x PCLKx.
3. When TIMPRE bit in the RCC_DCKCFGR register is set, if APBx prescaler is 1,2 or 4, then TIMxCLK = HCLK, otherwise TIMxCLK = 4x PCLKx.

The clock controller provides a high degree of flexibility to the application in the choice of the external crystal or the oscillator to run the core and peripherals at the highest frequency and, guarantee the appropriate frequency for peripherals that need a specific clock like Ethernet, USB OTG FS and HS, I2S, SAI, LTDC, and SDIO.

Several prescalers are used to configure the AHB frequency, the high-speed APB (APB2) and the low-speed APB (APB1) domains. The maximum frequency of the AHB domain is 180 MHz. The maximum allowed frequency of the high-speed APB2 domain is 90 MHz. The maximum allowed frequency of the low-speed APB1 domain is 45 MHz

All peripheral clocks are derived from the system clock (SYSCLK) except for:

- The USB OTG FS clock (48 MHz), the random analog generator (RNG) clock (≤48 MHz) and the SDIO clock (≤48 MHz) which are coming from a specific output of PLL (PLL48CLK)
- I2S clock

  To achieve high-quality audio performance, the I2S clock can be derived either from a specific PLL (PLLI2S) or from an external clock mapped on the I2S_CKIN pin. For more information about I2S clock frequency and precision, refer to *Section 28.4.4: Clock generator*.
- SAI1 clock

  The SAI1 clock is generated from a specific PLL (PLLSAI or PLLI2S) or from an external clock mapped on the I2S_CKIN pin.

  The PLLSAI can be used as clock source for SAI1 peripheral in case the PLLI2S is programmed to achieve another audio sampling frequency (49.152 MHz or 11.2896 MHz), and the application requires both frequencies at the same time.
- LTDC clock

  The LTDC clock is generated from a specific PLL (PLLSAI).
- The USB OTG HS (60 MHz) clock which is provided from the external PHY
- The Ethernet MAC clocks (TX, RX and RMII) which are provided from the external PHY. For further information on the Ethernet configuration, please refer to *Section 33.4.4: MII/RMII selection* in the Ethernet peripheral description. When the Ethernet is used, the AHB clock frequency must be at least 25 MHz.

The RCC feeds the external clock of the Cortex System Timer (SysTick) with the AHB clock (HCLK) divided by 8. The SysTick can work either with this clock or with the Cortex clock (HCLK), configurable in the SysTick control and status register.

The timer clock frequencies for STM32F42xxx and STM32F43xxx are automatically set by hardware. There are two cases depending on the value of TIMPRE bit in RCC_CFGR register:

- If TIMPRE bit in RCC_DKCFGR register is reset:

  If the APB prescaler is configured to a division factor of 1, the timer clock frequencies (TIMxCLK) are set to PCLKx. Otherwise, the timer clock frequencies are twice the frequency of the APB domain to which the timers are connected: TIMxCLK = 2xPCLKx.
- If TIMPRE bit in RCC_DKCFGR register is set:

  If the APB prescaler is configured to a division factor of 1, 2 or 4, the timer clock frequencies (TIMxCLK) are set to HCLK. Otherwise, the timer clock frequencies is four times the frequency of the APB domain to which the timers are connected: TIMxCLK = 4xPCLKx.

FCLK acts as Cortex®-M4 with FPU free-running clock. For more details, refer to the Cortex®-M4 with FPU technical reference manual.

6.2.1 HSE clock

The high speed external clock signal (HSE) can be generated from two possible clock sources:

- HSE external crystal/ceramic resonator
- HSE external user clock

The resonator and the load capacitors have to be placed as close as possible to the oscillator pins in order to minimize output distortion and startup stabilization time. The loading capacitance values must be adjusted according to the selected oscillator.

Figure 17. HSE/ LSE clock sources

	Hardware configuration
External clock	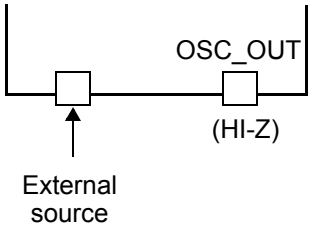
Crystal/ceramic resonators	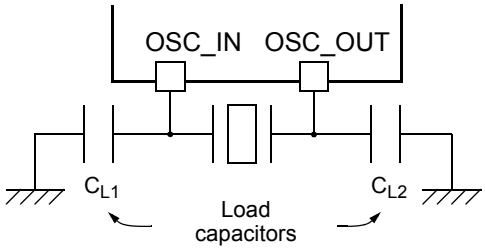

External source (HSE bypass)

In this mode, an external clock source must be provided. You select this mode by setting the HSEBYP and HSEON bits in the *RCC clock control register (RCC_CR)*. The external clock signal (square, sinus or triangle) with ~50% duty cycle has to drive the OSC_IN pin while the OSC_OUT pin should be left HI-Z. See *Figure 17*.

External crystal/ceramic resonator (HSE crystal)

The HSE has the advantage of producing a very accurate rate on the main clock.

The associated hardware configuration is shown in *Figure 17*. Refer to the electrical characteristics section of the *datasheet* for more details.

The HSERDY flag in the *RCC clock control register (RCC_CR)* indicates if the high-speed external oscillator is stable or not. At startup, the clock is not released until this bit is set by hardware. An interrupt can be generated if enabled in the *RCC clock interrupt register (RCC_CIR)*.

The HSE Crystal can be switched on and off using the HSEON bit in the *RCC clock control register (RCC_CR)*.

6.2.2 HSI clock

The HSI clock signal is generated from an internal 16 MHz RC oscillator and can be used directly as a system clock, or used as PLL input.

The HSI RC oscillator has the advantage of providing a clock source at low cost (no external components). It also has a faster startup time than the HSE crystal oscillator however, even with calibration the frequency is less accurate than an external crystal oscillator or ceramic resonator.

Calibration

RC oscillator frequencies can vary from one chip to another due to manufacturing process variations, this is why each device is factory calibrated by ST for 1% accuracy at T_A= 25 °C.

After reset, the factory calibration value is loaded in the HSICAL[7:0] bits in the *RCC clock control register (RCC_CR)*.

If the application is subject to voltage or temperature variations this may affect the RC oscillator speed. You can trim the HSI frequency in the application using the HSITRIM[4:0] bits in the *RCC clock control register (RCC_CR)*.

The HSIRDY flag in the *RCC clock control register (RCC_CR)* indicates if the HSI RC is stable or not. At startup, the HSI RC output clock is not released until this bit is set by hardware.

The HSI RC can be switched on and off using the HSION bit in the *RCC clock control register (RCC_CR)*.

The HSI signal can also be used as a backup source (Auxiliary clock) if the HSE crystal oscillator fails. Refer to *Section 6.2.7: Clock security system (CSS) on page 157*.

6.2.3 PLL configuration

The STM32F4xx devices feature three PLLs:

- A main PLL (PLL) clocked by the HSE or HSI oscillator and featuring two different output clocks:
  - The first output is used to generate the high speed system clock (up to 180 MHz)
  - The second output is used to generate the clock for the USB OTG FS (48 MHz), the random analog generator (≤48 MHz) and the SDIO (≤48 MHz).
- Two dedicated PLLs (PLLI2S and PLLSAI) used to generate an accurate clock to achieve high-quality audio performance on the I2S and SAI1 interfaces. PLLSAI is also used for the LCD-TFT clock.

Since the main-PLL configuration parameters cannot be changed once PLL is enabled, it is recommended to configure PLL before enabling it (selection of the HSI or HSE oscillator as PLL clock source, and configuration of division factors M, N, P, and Q).

The PLLI2S and PLLSAI use the same input clock as PLL (PLLM[5:0] and PLLSRC bits are common to both PLLs). However, the PLLI2S and PLLSAI have dedicated enable/disable and division factors (N and R) configuration bits. Once the PLLI2S and PLLSAI are enabled, the configuration parameters cannot be changed.

The three PLLs are disabled by hardware when entering Stop and Standby modes, or when an HSE failure occurs when HSE or PLL (clocked by HSE) are used as system clock. *RCC PLL configuration register (RCC_PLLCFGR)*,*RCC clock configuration register (RCC_CFGR)*, and *RCC Dedicated Clock Configuration Register (RCC_DCKCFGR)* can be used to configure PLL, PLLI2S, and PLLSAI.

6.2.4 LSE clock

The LSE clock is generated from a 32.768 kHz low-speed external crystal or ceramic resonator. It has the advantage providing a low-power but highly accurate clock source to the real-time clock peripheral (RTC) for clock/calendar or other timing functions.

The LSE oscillator is switched on and off using the LSEON bit in *RCC Backup domain control register (RCC_BDCR)*.

The LSERDY flag in the *RCC Backup domain control register (RCC_BDCR)* indicates if the LSE crystal is stable or not. At startup, the LSE crystal output clock signal is not released until this bit is set by hardware. An interrupt can be generated if enabled in the *RCC clock interrupt register (RCC_CIR)*.

External source (LSE bypass)

In this mode, an external clock source must be provided. It must have a frequency up to 1 MHz. You select this mode by setting the LSEBYP and LSEON bits in the *RCC Backup domain control register (RCC_BDCR)*. The external clock signal (square, sinus or triangle) with ~50% duty cycle has to drive the OSC32_IN pin while the OSC32_OUT pin should be left HI-Z. See *Figure 17*.

6.2.5 LSI clock

The LSI RC acts as an low-power clock source that can be kept running in Stop and Standby mode for the independent watchdog (IWDG) and Auto-wakeup unit (AWU). The clock frequency is around 32 kHz. For more details, refer to the electrical characteristics section of the datasheets.

The LSI RC can be switched on and off using the LSION bit in the *RCC clock control & status register (RCC_CSR)*.

The LSIRDY flag in the *RCC clock control & status register (RCC_CSR)* indicates if the low-speed internal oscillator is stable or not. At startup, the clock is not released until this bit is set by hardware. An interrupt can be generated if enabled in the *RCC clock interrupt register (RCC_CIR)*.

6.2.6 System clock (SYSCLK) selection

After a system reset, the HSI oscillator is selected as the system clock. When a clock source is used directly or through PLL as the system clock, it is not possible to stop it.

A switch from one clock source to another occurs only if the target clock source is ready (clock stable after startup delay or PLL locked). If a clock source that is not yet ready is selected, the switch occurs when the clock source is ready. Status bits in the *RCC clock control register (RCC_CR)* indicate which clock(s) is (are) ready and which clock is currently used as the system clock.

6.2.7 Clock security system (CSS)

The clock security system can be activated by software. In this case, the clock detector is enabled after the HSE oscillator startup delay, and disabled when this oscillator is stopped.

If a failure is detected on the HSE clock, this oscillator is automatically disabled, a clock failure event is sent to the break inputs of advanced-control timers TIM1 and TIM8, and an interrupt is generated to inform the software about the failure (clock security system interrupt CSSI), allowing the MCU to perform rescue operations. The CSSI is linked to the Cortex®-M4 with FPU NMI (non-maskable interrupt) exception vector.

Note: When the CSS is enabled, if the HSE clock happens to fail, the CSS generates an interrupt, which causes the automatic generation of an NMI. The NMI is executed indefinitely unless the CSS interrupt pending bit is cleared. As a consequence, the application has to clear the CSS interrupt in the NMI ISR by setting the CSSC bit in the Clock interrupt register (RCC_CIR).

If the HSE oscillator is used directly or indirectly as the system clock (indirectly meaning that it is directly used as PLL input clock, and that PLL clock is the system clock) and a failure is detected, then the system clock switches to the HSI oscillator and the HSE oscillator is disabled.

If the HSE oscillator clock was the clock source of PLL used as the system clock when the failure occurred, PLL is also disabled. In this case, if the PLLI2S was enabled, it is also disabled when the HSE fails.

6.2.8 RTC/AWU clock

Once the RTCCLK clock source has been selected, the only possible way of modifying the selection is to reset the power domain.

The RTCCLK clock source can be either the HSE 1 MHz (HSE divided by a programmable prescaler), the LSE or the LSI clock. This is selected by programming the RTCSEL[1:0] bits in the *RCC Backup domain control register (RCC_BDCR)* and the RTCPRE[4:0] bits in *RCC clock configuration register (RCC_CFGR)*. This selection cannot be modified without resetting the Backup domain.

If the LSE is selected as the RTC clock, the RTC operates normally if the backup or the system supply disappears. If the LSI is selected as the AWU clock, the AWU state is not guaranteed if the system supply disappears. If the HSE oscillator divided by a value between 2 and 31 is used as the RTC clock, the RTC state is not guaranteed if the backup or the system supply disappears.

The LSE clock is in the Backup domain, whereas the HSE and LSI clocks are not. As a consequence:

- If LSE is selected as the RTC clock:
  - The RTC continues to work even if the V_{DD} supply is switched off, provided the V_{BAT} supply is maintained.
- If LSI is selected as the Auto-wakeup unit (AWU) clock:
  - The AWU state is not guaranteed if the V_{DD} supply is powered off. Refer to *Section 6.2.5: LSI clock on page 156* for more details on LSI calibration.
- If the HSE clock is used as the RTC clock:
  - The RTC state is not guaranteed if the V_{DD} supply is powered off or if the internal voltage regulator is powered off (removing power from the 1.2 V domain).

Note: To read the RTC calendar register when the APB1 clock frequency is less than seven times the RTC clock frequency ($f_{APB1} < 7xf_{RTCLCK}$), the software must read the calendar time and date registers twice. The data are correct if the second read access to RTC_TR gives the same result than the first one. Otherwise a third read access must be performed.

6.2.9 Watchdog clock

If the independent watchdog (IWDG) is started by either hardware option or software access, the LSI oscillator is forced ON and cannot be disabled. After the LSI oscillator temporization, the clock is provided to the IWDG.

6.2.10 Clock-out capability

Two microcontroller clock output (MCO) pins are available:

- MCO1

  You can output four different clock sources onto the MCO1 pin (PA8) using the configurable prescaler (from 1 to 5):
  - HSI clock
  - LSE clock
  - HSE clock
  - PLL clock

  The desired clock source is selected using the MCO1PRE[2:0] and MCO1[1:0] bits in the *RCC clock configuration register (RCC_CFGR)*.
- MCO2

  You can output four different clock sources onto the MCO2 pin (PC9) using the configurable prescaler (from 1 to 5):
  - HSE clock
  - PLL clock
  - System clock (SYSCLK)
  - PLLI2S clock

  The desired clock source is selected using the MCO2PRE[2:0] and MCO2 bits in the *RCC clock configuration register (RCC_CFGR)*.

For the different MCO pins, the corresponding GPIO port has to be programmed in alternate function mode.

The selected clock to output onto MCO must not exceed 100 MHz (the maximum I/O speed).

6.2.11 Internal/external clock measurement using TIM5/TIM11

It is possible to indirectly measure the frequencies of all on-board clock source generators by means of the input capture of TIM5 channel4 and TIM11 channel1 as shown in *Figure 18* and *Figure 19*.

Internal/external clock measurement using TIM5 channel4

TIM5 has an input multiplexer which allows choosing whether the input capture is triggered by the I/O or by an internal clock. This selection is performed through the TI4_RMP [1:0] bits in the TIM5_OR register.

The primary purpose of having the LSE connected to the channel4 input capture is to be able to precisely measure the HSI (this requires to have the HSI used as the system clock source). The number of HSI clock counts between consecutive edges of the LSE signal provides a measurement of the internal clock period. Taking advantage of the high precision of LSE crystals (typically a few tens of ppm) we can determine the internal clock frequency with the same resolution, and trim the source to compensate for manufacturing-process and/or temperature- and voltage-related frequency deviations.

The HSI oscillator has dedicated, user-accessible calibration bits for this purpose.

The basic concept consists in providing a relative measurement (e.g. HSI/LSE ratio): the precision is therefore tightly linked to the ratio between the two clock sources. The greater the ratio, the better the measurement.

It is also possible to measure the LSI frequency: this is useful for applications that do not have a crystal. The ultralow-power LSI oscillator has a large manufacturing process deviation: by measuring it versus the HSI clock source, it is possible to determine its frequency with the precision of the HSI. The measured value can be used to have more accurate RTC time base timeouts (when LSI is used as the RTC clock source) and/or an IWDG timeout with an acceptable accuracy.

Use the following procedure to measure the LSI frequency:

1. Enable the TIM5 timer and configure channel4 in Input capture mode.
2. This bit is set the TI4_RMP bits in the TIM5_OR register to 0x01 to connect the LSI clock internally to TIM5 channel4 input capture for calibration purposes.
3. Measure the LSI clock frequency using the TIM5 capture/compare 4 event or interrupt.
4. Use the measured LSI frequency to update the prescaler of the RTC depending on the desired time base and/or to compute the IWDG timeout.

Figure 18. Frequency measurement with TIM5 in Input capture mode

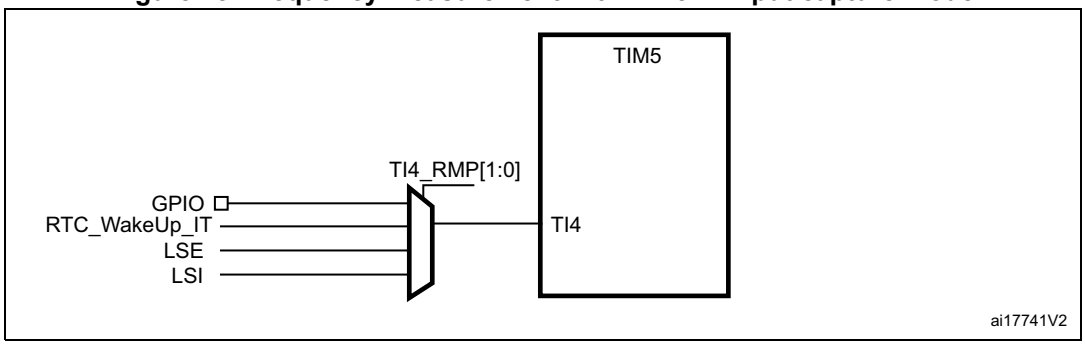

Internal/external clock measurement using TIM11 channel1

TIM11 has an input multiplexer which allows choosing whether the input capture is triggered by the I/O or by an internal clock. This selection is performed through TI1_RMP [1:0] bits in the TIM11_OR register. The HSE_RTC clock (HSE divided by a programmable prescaler) is connected to channel 1 input capture to have a rough indication of the external crystal frequency. This requires that the HSI is the system clock source. This can be useful for instance to ensure compliance with the IEC 60730/IEC 61335 standards which require to be able to determine harmonic or subharmonic frequencies (–50/+100% deviations).

Figure 19. Frequency measurement with TIM11 in Input capture mode

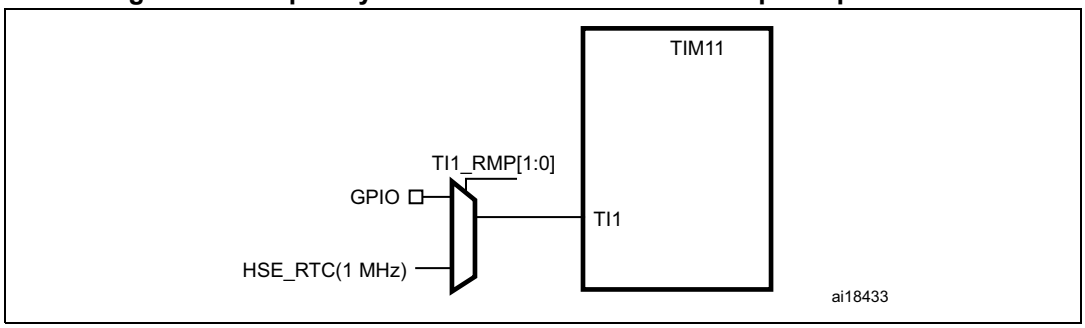

6.3 RCC registers

Refer to *Section 1.1: List of abbreviations for registers* for a list of abbreviations used in register descriptions.

6.3.1 RCC clock control register (RCC_CR)

Address offset: 0x00

Reset value: 0x0000 XX83 where X is undefined.

Access: no wait state, word, half-word and byte access

31	30	29	28	27	26	25	24	23	22	21	20	19	18	17	16
Reserved		PLLSAI RDY	PLLSAI ON	PLLI2S RDY	PLLI2S ON	PLLRD Y	PLLON	Reserved				CSS ON	HSE BYP	HSE RDY	HSE ON
		r	rw	r	rw	r	rw					rw	rw	r	rw

15	14	13	12	11	10	9	8	7	6	5	4	3	2	1	0
HSICAL[7:0]								HSITRIM[4:0]					Res.	HSI RDY	HSION
r	r	r	r	r	r	r	r	rw	rw	rw	rw	rw		r	rw

Bits 31:28 Reserved, must be kept at reset value.

Bit 29 **PLLSAIRDY**: PLLSAI clock ready flag
Set by hardware to indicate that the PLLSAI is locked.
0: PLLSAI unlocked
1: PLLSAI locked

Bit 28 **PLLSAION**: PLLSAI enable
Set and cleared by software to enable PLLSAI.
Cleared by hardware when entering Stop or Standby mode.
0: PLLSAI OFF
1: PLLSAI ON

Bit 27 **PLLI2SRDY**: PLLI2S clock ready flag
Set by hardware to indicate that the PLLI2S is locked.
0: PLLI2S unlocked
1: PLLI2S locked

Bit 26 **PLLI2SON**: PLLI2S enable
Set and cleared by software to enable PLLI2S.
Cleared by hardware when entering Stop or Standby mode.
0: PLLI2S OFF
1: PLLI2S ON

Bit 25 **PLLRDY**: Main PLL (PLL) clock ready flag
Set by hardware to indicate that PLL is locked.
0: PLL unlocked
1: PLL locked

Bit 24 **PLLON**: Main PLL (PLL) enable
Set and cleared by software to enable PLL.
Cleared by hardware when entering Stop or Standby mode. This bit cannot be reset if PLL clock is used as the system clock.
0: PLL OFF
1: PLL ON

Bits 23:20 Reserved, must be kept at reset value.

Bit 19 **CSSON**: Clock security system enable

Set and cleared by software to enable the clock security system. When CSSON is set, the clock detector is enabled by hardware when the HSE oscillator is ready, and disabled by hardware if an oscillator failure is detected.

0: Clock security system OFF (Clock detector OFF)

1: Clock security system ON (Clock detector ON if HSE oscillator is stable, OFF if not)

Bit 18 **HSEBYP**: HSE clock bypass

Set and cleared by software to bypass the oscillator with an external clock. The external clock must be enabled with the HSEON bit, to be used by the device.

The HSEBYP bit can be written only if the HSE oscillator is disabled.

0: HSE oscillator not bypassed

1: HSE oscillator bypassed with an external clock

Bit 17 **HSERDY**: HSE clock ready flag

Set by hardware to indicate that the HSE oscillator is stable. After the HSEON bit is cleared, HSERDY goes low after 6 HSE oscillator clock cycles.

0: HSE oscillator not ready

1: HSE oscillator ready

Bit 16 **HSEON**: HSE clock enable

Set and cleared by software.

Cleared by hardware to stop the HSE oscillator when entering Stop or Standby mode. This bit cannot be reset if the HSE oscillator is used directly or indirectly as the system clock.

0: HSE oscillator OFF

1: HSE oscillator ON

Bits 15:8 **HSICAL[7:0]**: Internal high-speed clock calibration

These bits are initialized automatically at startup.

Bits 7:3 **HSITRIM[4:0]**: Internal high-speed clock trimming

These bits provide an additional user-programmable trimming value that is added to the HSICAL[7:0] bits. It can be programmed to adjust to variations in voltage and temperature that influence the frequency of the internal HSI RC.

Bit 2 Reserved, must be kept at reset value.

Bit 1 **HSIRDY**: Internal high-speed clock ready flag

Set by hardware to indicate that the HSI oscillator is stable. After the HSION bit is cleared, HSIRDY goes low after 6 HSI clock cycles.

0: HSI oscillator not ready

1: HSI oscillator ready

Bit 0 **HSION**: Internal high-speed clock enable

Set and cleared by software.

Set by hardware to force the HSI oscillator ON when leaving the Stop or Standby mode or in case of a failure of the HSE oscillator used directly or indirectly as the system clock. This bit cannot be cleared if the HSI is used directly or indirectly as the system clock.

0: HSI oscillator OFF

1: HSI oscillator ON

6.3.2 RCC PLL configuration register (RCC_PLLCFGR)

Address offset: 0x04

Reset value: 0x2400 3010

Access: no wait state, word, half-word and byte access.

This register is used to configure the PLL clock outputs according to the formulas:

- $f_{(VCO\ clock)} = f_{(PLL\ clock\ input)} \times (PLLN / PLLM)$
- $f_{(PLL\ general\ clock\ output)} = f_{(VCO\ clock)} / PLLP$
- $f_{(USB\ OTG\ FS,\ SDIO,\ RNG\ clock\ output)} = f_{(VCO\ clock)} / PLLQ$

31	30	29	28	27	26	25	24	23	22	21	20	19	18	17	16
Reserved				PLLQ3	PLLQ2	PLLQ1	PLLQ0	Reserved	PLLSRC	Reserved				PLLP1	PLLP0
				rw	rw	rw	rw		rw					rw	rw

15	14	13	12	11	10	9	8	7	6	5	4	3	2	1	0
Reserved	PLLN									PLLM5	PLLM4	PLLM3	PLLM2	PLLM1	PLLM0
	rw	rw	rw	rw	rw	rw	rw	rw	rw	rw	rw	rw	rw	rw	rw

Bits 31:28 Reserved, must be kept at reset value.

Bits 27:24 **PLLQ:** Main PLL (PLL) division factor for USB OTG FS, SDIO and random number generator clocks

Set and cleared by software to control the frequency of USB OTG FS clock, the random number generator clock and the SDIO clock. These bits should be written only if PLL is disabled.

Caution: The USB OTG FS requires a 48 MHz clock to work correctly. The SDIO and the random number generator need a frequency lower than or equal to 48 MHz to work correctly.

USB OTG FS clock frequency = VCO frequency / PLLQ with 2 ≤PLLQ ≤15

0000: PLLQ = 0, wrong configuration

0001: PLLQ = 1, wrong configuration

0010: PLLQ = 2

0011: PLLQ = 3

0100: PLLQ = 4

...

1111: PLLQ = 15

Bit 23 Reserved, must be kept at reset value.

Bit 22 **PLLSRC:** Main PLL(PLL) and audio PLL (PLLI2S) entry clock source

Set and cleared by software to select PLL and PLLI2S clock source. This bit can be written only when PLL and PLLI2S are disabled.

0: HSI clock selected as PLL and PLLI2S clock entry

1: HSE oscillator clock selected as PLL and PLLI2S clock entry

Bits 21:18 Reserved, must be kept at reset value.

Bits 17:16 **PLLP:** Main PLL (PLL) division factor for main system clock

Set and cleared by software to control the frequency of the general PLL output clock. These bits can be written only if PLL is disabled.

Caution: The software has to set these bits correctly not to exceed 180 MHz on this domain.

PLL output clock frequency = VCO frequency / PLLP with PLLP = 2, 4, 6, or 8

00: PLLP = 2
01: PLLP = 4
10: PLLP = 6
11: PLLP = 8

Bits 14:6 **PLLN:** Main PLL (PLL) multiplication factor for VCO

Set and cleared by software to control the multiplication factor of the VCO. These bits can be written only when PLL is disabled. Only half-word and word accesses are allowed to write these bits.

Caution: The software has to set these bits correctly to ensure that the VCO output frequency is between 100 and 432 MHz.

VCO output frequency = VCO input frequency × PLLN with 50 ≤PLLN ≤432

000000000: PLLN = 0, wrong configuration
000000001: PLLN = 1, wrong configuration
...
000110010: PLLN = 50
...
001100011: PLLN = 99
001100100: PLLN = 100
...
110110000: PLLN = 432
110110001: PLLN = 433, wrong configuration
...
111111111: PLLN = 511, wrong configuration

Note: Multiplication factors ranging from 50 and 99 are possible for VCO input frequency higher than 1 MHz. However care must be taken that the minimum VCO output frequency respects the value specified above.

Bits 5:0 **PLLM:** Division factor for the main PLL (PLL) and audio PLL (PLLI2S) input clock

Set and cleared by software to divide the PLL and PLLI2S input clock before the VCO. These bits can be written only when the PLL and PLLI2S are disabled.

Caution: The software has to set these bits correctly to ensure that the VCO input frequency ranges from 1 to 2 MHz. It is recommended to select a frequency of 2 MHz to limit PLL jitter.

VCO input frequency = PLL input clock frequency / PLLM with 2 ≤PLLM ≤63

000000: PLLM = 0, wrong configuration
000001: PLLM = 1, wrong configuration
000010: PLLM = 2
000011: PLLM = 3
000100: PLLM = 4
...
111110: PLLM = 62
111111: PLLM = 63

6.3.3 RCC clock configuration register (RCC_CFGR)

Address offset: 0x08

Reset value: 0x0000 0000

Access: 0 ≤ wait state ≤ 2, word, half-word and byte access

1 or 2 wait states inserted only if the access occurs during a clock source switch.

31	30	29	28	27	26	25	24	23	22	21	20	19	18	17	16
MCO2		MCO2 PRE[2:0]			MCO1 PRE[2:0]			I2SSCR	MCO1		RTCPRE[4:0]				
rw		rw	rw	rw	rw	rw	rw	rw	rw		rw	rw	rw	rw	rw

15	14	13	12	11	10	9	8	7	6	5	4	3	2	1	0
PPRE2[2:0]			PPRE1[2:0]			Reserved		HPRE[3:0]				SWS1	SWS0	SW1	SW0
rw	rw	rw	rw	rw	rw			rw	rw	rw	rw	r	r	rw	rw

Bits 31:30 **MCO2[1:0]:** Microcontroller clock output 2

Set and cleared by software. Clock source selection may generate glitches on MCO2. It is highly recommended to configure these bits only after reset before enabling the external oscillators and the PLLs.

00: System clock (SYSCLK) selected
01: PLLI2S clock selected
10: HSE oscillator clock selected
11: PLL clock selected

Bits 27:29 **MCO2PRE:** MCO2 prescaler

Set and cleared by software to configure the prescaler of the MCO2. Modification of this prescaler may generate glitches on MCO2. It is highly recommended to change this prescaler only after reset before enabling the external oscillators and the PLLs.

0xx: no division
100: division by 2
101: division by 3
110: division by 4
111: division by 5

Bits 24:26 **MCO1PRE:** MCO1 prescaler

Set and cleared by software to configure the prescaler of the MCO1. Modification of this prescaler may generate glitches on MCO1. It is highly recommended to change this prescaler only after reset before enabling the external oscillators and the PLL.

0xx: no division
100: division by 2
101: division by 3
110: division by 4
111: division by 5

Bit 23 **I2SSRC**: I2S clock selection

Set and cleared by software. This bit allows to select the I2S clock source between the PLLI2S clock and the external clock. It is highly recommended to change this bit only after reset and before enabling the I2S module.

0: PLLI2S clock used as I2S clock source
1: External clock mapped on the I2S_CKIN pin used as I2S clock source

Bits 22:21 **MCO1:** Microcontroller clock output 1

Set and cleared by software. Clock source selection may generate glitches on MCO1. It is highly recommended to configure these bits only after reset before enabling the external oscillators and PLL.

00: HSI clock selected
01: LSE oscillator selected
10: HSE oscillator clock selected
11: PLL clock selected

Bits 20:16 **RTCPRE:** HSE division factor for RTC clock

Set and cleared by software to divide the HSE clock input clock to generate a 1 MHz clock for RTC.

Caution: The software has to set these bits correctly to ensure that the clock supplied to the RTC is 1 MHz. These bits must be configured if needed before selecting the RTC clock source.

00000: no clock
00001: no clock
00010: HSE/2
00011: HSE/3
00100: HSE/4
...
11110: HSE/30
11111: HSE/31

Bits 15:13 **PPRE2:** APB high-speed prescaler (APB2)

Set and cleared by software to control APB high-speed clock division factor.

Caution: The software has to set these bits correctly not to exceed 90 MHz on this domain. The clocks are divided with the new prescaler factor from 1 to 16 AHB cycles after PPRE2 write.

0xx: AHB clock not divided
100: AHB clock divided by 2
101: AHB clock divided by 4
110: AHB clock divided by 8
111: AHB clock divided by 16

Bits 12:10 **PPRE1:** APB Low speed prescaler (APB1)

Set and cleared by software to control APB low-speed clock division factor.

Caution: The software has to set these bits correctly not to exceed 45 MHz on this domain. The clocks are divided with the new prescaler factor from 1 to 16 AHB cycles after PPRE1 write.

0xx: AHB clock not divided
100: AHB clock divided by 2
101: AHB clock divided by 4
110: AHB clock divided by 8
111: AHB clock divided by 16

Bits 9:8 Reserved, must be kept at reset value.

Bits 7:4 **HPRE:** AHB prescaler

Set and cleared by software to control AHB clock division factor.

Caution: The clocks are divided with the new prescaler factor from 1 to 16 AHB cycles after HPRE write.

Caution: The AHB clock frequency must be at least 25 MHz when the Ethernet is used.

0xxx: system clock not divided
1000: system clock divided by 2
1001: system clock divided by 4
1010: system clock divided by 8
1011: system clock divided by 16
1100: system clock divided by 64
1101: system clock divided by 128
1110: system clock divided by 256
1111: system clock divided by 512

Bits 3:2 **SWS:** System clock switch status

Set and cleared by hardware to indicate which clock source is used as the system clock.
00: HSI oscillator used as the system clock
01: HSE oscillator used as the system clock
10: PLL used as the system clock
11: not applicable

Bits 1:0 **SW:** System clock switch

Set and cleared by software to select the system clock source.
Set by hardware to force the HSI selection when leaving the Stop or Standby mode or in case of failure of the HSE oscillator used directly or indirectly as the system clock.
00: HSI oscillator selected as system clock
01: HSE oscillator selected as system clock
10: PLL selected as system clock
11: not allowed

6.3.4 RCC clock interrupt register (RCC_CIR)

Address offset: 0x0C

Reset value: 0x0000 0000

Access: no wait state, word, half-word and byte access

31	30	29	28	27	26	25	24	23	22	21	20	19	18	17	16
Reserved								CSSC	PLLSAI RDYC	PLLI2S RDYC	PLL RDYC	HSE RDYC	HSI RDYC	LSE RDYC	LSI RDYC
								w	w	w	w	w	w	w	w
15	14	13	12	11	10	9	8	7	6	5	4	3	2	1	0
Reserved	PLLSAI RDYIE	PLLI2S RDYIE	PLL RDYIE	HSE RDYIE	HSI RDYIE	LSE RDYIE	LSI RDYIE	CSSF	PLLSAI RDYF	PLLI2S RDYF	PLL RDYF	HSE RDYF	HSI RDYF	LSE RDYF	LSI RDYF
	rw	rw	rw	rw	rw	rw	rw	r	r	r	r	r	r	r	r

Bits 31:24 Reserved, must be kept at reset value.

Bit 23 **CSSC:** Clock security system interrupt clear
This bit is set by software to clear the CSSF flag.
0: No effect
1: Clear CSSF flag

Bit 22 **PLLSAIRDYC**: PLLSAI Ready Interrupt Clear
This bit is set by software to clear PLLSAIRDYF flag. It is reset by hardware when the PLLSAIRDYF is cleared.
0: PLLSAIRDYF not cleared
1: PLLSAIRDYF cleared

Bit 21 **PLLI2SRDYC:** PLLI2S ready interrupt clear
This bit is set by software to clear the PLLI2SRDYF flag.
0: No effect
1: PLLI2SRDYF cleared

Bit 20 **PLLRDYC:** Main PLL(PLL) ready interrupt clear
This bit is set by software to clear the PLLRDYF flag.
0: No effect
1: PLLRDYF cleared

Bit 19 **HSERDYC:** HSE ready interrupt clear
This bit is set by software to clear the HSERDYF flag.
0: No effect
1: HSERDYF cleared

Bit 18 **HSIRDYC:** HSI ready interrupt clear
This bit is set software to clear the HSIRDYF flag.
0: No effect
1: HSIRDYF cleared

Bit 17 **LSERDYC:** LSE ready interrupt clear
This bit is set by software to clear the LSERDYF flag.
0: No effect
1: LSERDYF cleared

Bit 16 **LSIRDYC:** LSI ready interrupt clear
This bit is set by software to clear the LSIRDYF flag.
0: No effect
1: LSIRDYF cleared

Bit 15 Reserved, must be kept at reset value.

Bit 14 **PLLSAIRDYIE**: PLLSAI Ready Interrupt Enable
This bit is set and reset by software to enable/disable interrupt caused by PLLSAI lock.
0: PLLSAI lock interrupt disabled
1: PLLSAI lock interrupt enabled

Bit 13 **PLLI2SRDYIE:** PLLI2S ready interrupt enable
This bit is set and cleared by software to enable/disable interrupt caused by PLLI2S lock.
0: PLLI2S lock interrupt disabled
1: PLLI2S lock interrupt enabled

Bit 12 **PLLRDYIE:** Main PLL (PLL) ready interrupt enable

This bit is set and cleared by software to enable/disable interrupt caused by PLL lock.
0: PLL lock interrupt disabled
1: PLL lock interrupt enabled

Bit 11 **HSERDYIE:** HSE ready interrupt enable

This bit is set and cleared by software to enable/disable interrupt caused by the HSE oscillator stabilization.
0: HSE ready interrupt disabled
1: HSE ready interrupt enabled

Bit 10 **HSIRDYIE:** HSI ready interrupt enable

This bit is set and cleared by software to enable/disable interrupt caused by the HSI oscillator stabilization.
0: HSI ready interrupt disabled
1: HSI ready interrupt enabled

Bit 9 **LSERDYIE:** LSE ready interrupt enable

This bit is set and cleared by software to enable/disable interrupt caused by the LSE oscillator stabilization.
0: LSE ready interrupt disabled
1: LSE ready interrupt enabled

Bit 8 **LSIRDYIE:** LSI ready interrupt enable

This bit is set and cleared by software to enable/disable interrupt caused by LSI oscillator stabilization.
0: LSI ready interrupt disabled
1: LSI ready interrupt enabled

Bit 7 **CSSF:** Clock security system interrupt flag

This bit is set by hardware when a failure is detected in the HSE oscillator.
It is cleared by software by setting the CSSC bit.
0: No clock security interrupt caused by HSE clock failure
1: Clock security interrupt caused by HSE clock failure

Bit 6 **PLLSAIRDYF**: PLLSAI Ready Interrupt flag

This bit is set by hardware when the PLLSAI is locked and PLLSAIRDYDIE is set.
It is cleared by software by setting the PLLSAIRDYC bit.
0: No clock ready interrupt caused by PLLSAI lock
1: Clock ready interrupt caused by PLLSAI lock

Bit 5 **PLLI2SRDYF:** PLLI2S ready interrupt flag

This bit is set by hardware when the PLLI2S is locked and PLLI2SRDYDIE is set.
It is cleared by software by setting the PLLRI2SDYC bit.
0: No clock ready interrupt caused by PLLI2S lock
1: Clock ready interrupt caused by PLLI2S lock

Bit 4 **PLLRDYF:** Main PLL (PLL) ready interrupt flag

This bit is set by hardware when PLL is locked and PLLRDYDIE is set.
It is cleared by software setting the PLLRDYC bit.
0: No clock ready interrupt caused by PLL lock
1: Clock ready interrupt caused by PLL lock

Bit 3 **HSERDYF:** HSE ready interrupt flag

This bit is set by hardware when External High Speed clock becomes stable and HSERDYDIE is set.

It is cleared by software by setting the HSERDYC bit.

0: No clock ready interrupt caused by the HSE oscillator

1: Clock ready interrupt caused by the HSE oscillator

Bit 2 **HSIRDYF:** HSI ready interrupt flag

This bit is set by hardware when the Internal High Speed clock becomes stable and HSIRDYDIE is set.

It is cleared by software by setting the HSIRDYC bit.

0: No clock ready interrupt caused by the HSI oscillator

1: Clock ready interrupt caused by the HSI oscillator

Bit 1 **LSERDYF:** LSE ready interrupt flag

This bit is set by hardware when the External Low Speed clock becomes stable and LSERDYDIE is set.

It is cleared by software by setting the LSERDYC bit.

0: No clock ready interrupt caused by the LSE oscillator

1: Clock ready interrupt caused by the LSE oscillator

Bit 0 **LSIRDYF:** LSI ready interrupt flag

This bit is set by hardware when the internal low speed clock becomes stable and LSIRDYDIE is set.

It is cleared by software by setting the LSIRDYC bit.

0: No clock ready interrupt caused by the LSI oscillator

1: Clock ready interrupt caused by the LSI oscillator

6.3.5 RCC AHB1 peripheral reset register (RCC_AHB1RSTR)

Address offset: 0x10

Reset value: 0x0000 0000

Access: no wait state, word, half-word and byte access.

31	30	29	28	27	26	25	24	23	22	21	20	19	18	17	16
Reserved		OTGHS RST	Reserved			ETHMAC RST	Res.	DMA2D RST	DMA2 RST	DMA1 RST	Reserved				
		rw				rw		rw	rw	rw					

15	14	13	12	11	10	9	8	7	6	5	4	3	2	1	0
Reserved			CRCRST	Res.	GPIOKRST	GPIOJRST	GPIOIRST	GPIOHRST	GPIOGGRST	GPIOFRST	GPIOERST	GPIODRST	GPIOCRST	GPIOBRST	GPIOARST
			rw		rw	rw	rw	rw	rw	rw	rw	rw	rw	rw	rw

Bits 31:30 Reserved, must be kept at reset value.

Bit 29 **OTGHSRST:** USB OTG HS module reset

This bit is set and cleared by software.

0: does not reset the USB OTG HS module

1: resets the USB OTG HS module

Bits 28:26 Reserved, must be kept at reset value.

Bit 25 **ETHMACRST:** Ethernet MAC reset
This bit is set and cleared by software.
0: does not reset Ethernet MAC
1: resets Ethernet MAC

Bit 24 Reserved, must be kept at reset value.

Bit 23 **DMA2DRST**: DMA2D reset
This bit is set and reset by software.
0: does not reset DMA2D
1: resets DMA2D

Bit 22 **DMA2RST:** DMA2 reset
This bit is set and cleared by software.
0: does not reset DMA2
1: resets DMA2

Bit 21 **DMA1RST:** DMA2 reset
This bit is set and cleared by software.
0: does not reset DMA2
1: resets DMA2

Bits 20:13 Reserved, must be kept at reset value.

Bit 12 **CRCRST:** CRC reset
This bit is set and cleared by software.
0: does not reset CRC
1: resets CRC

Bit 11 Reserved, must be kept at reset value.

Bit 10 **GPIOKRST**: IO port K reset
This bit is set and cleared by software.
0: does not reset IO port K
1: resets IO port K

Bit 9 **GPIOJRST**: IO port J reset
This bit is set and cleared by software.
0: does not reset IO port J
1: resets IO port J

Bit 8 **GPIOIRST:** IO port I reset
This bit is set and cleared by software.
0: does not reset IO port I
1: resets IO port I

Bit 7 **GPIOHRST:** IO port H reset
This bit is set and cleared by software.
0: does not reset IO port H
1: resets IO port H

Bit 6 **GPIOGRST:** IO port G reset
This bit is set and cleared by software.
0: does not reset IO port G
1: resets IO port G

Bit 5 **GPIOFRST:** IO port F reset

This bit is set and cleared by software.
0: does not reset IO port F
1: resets IO port F

Bit 4 **GPIOERST:** IO port E reset

This bit is set and cleared by software.
0: does not reset IO port E
1: resets IO port E

Bit 3 **GPIODRST:** IO port D reset

This bit is set and cleared by software.
0: does not reset IO port D
1: resets IO port D

Bit 2 **GPIOCRST:** IO port C reset

This bit is set and cleared by software.
0: does not reset IO port C
1: resets IO port C

Bit 1 **GPIOBRST:** IO port B reset

This bit is set and cleared by software.
0: does not reset IO port B
1:resets IO port B

Bit 0 **GPIOARST:** IO port A reset

This bit is set and cleared by software.
0: does not reset IO port A
1: resets IO port A

6.3.6 RCC AHB2 peripheral reset register (RCC_AHB2RSTR)

Address offset: 0x14

Reset value: 0x0000 0000

Access: no wait state, word, half-word and byte access

31	30	29	28	27	26	25	24	23	22	21	20	19	18	17	16
Reserved															
15	14	13	12	11	10	9	8	7	6	5	4	3	2	1	0
Reserved								OTGFS RST	RNG RST	HASH RST	CRYP RST	Reserved			DCMI RST
								rw	rw	rw	rw				rw

Bits 31:8 Reserved, must be kept at reset value.

Bit 7 **OTGFSRST:** USB OTG FS module reset
Set and cleared by software.
0: does not reset the USB OTG FS module
1: resets the USB OTG FS module

Bit 6 **RNGRST:** Random number generator module reset
Set and cleared by software.
0: does not reset the random number generator module
1: resets the random number generator module

Bit 5 **HASHRST:** Hash module reset
Set and cleared by software.
0: does not reset the HASH module
1: resets the HASH module

Bit 4 **CRYPRST:** Cryptographic module reset
Set and cleared by software.
0: does not reset the cryptographic module
1: resets the cryptographic module

Bits 3:1 Reserved, must be kept at reset value.

Bit 0 **DCMIRST:** Camera interface reset
Set and cleared by software.
0: does not reset the Camera interface
1: resets the Camera interface

6.3.7 RCC AHB3 peripheral reset register (RCC_AHB3RSTR)

Address offset: 0x18

Reset value: 0x0000 0000

Access: no wait state, word, half-word and byte access.

31	30	29	28	27	26	25	24	23	22	21	20	19	18	17	16
Reserved															
15	14	13	12	11	10	9	8	7	6	5	4	3	2	1	0
Reserved															FMCRST
															rw

Bits 31:1 Reserved, must be kept at reset value.

Bit 0 **FMCRST:** Flexible memory controller module reset
Set and cleared by software.
0: does not reset the FMC module
1: resets the FMC module

6.3.8 RCC APB1 peripheral reset register (RCC_APB1RSTR)

Address offset: 0x20

Reset value: 0x0000 0000

Access: no wait state, word, half-word and byte access.

31	30	29	28	27	26	25	24	23	22	21	20	19	18	17	16
UART8RST	UART7RST	DACRST	PWRRST	Reserved	CAN2RST	CAN1RST	Reserved	I2C3RST	I2C2RST	I2C1RST	UART5RST	UART4RST	UART3RST	UART2RST	Reserved
rw	rw	rw	rw			rw		rw	rw	rw	rw	rw	rw	rw	
15	14	13	12	11	10	9	8	7	6	5	4	3	2	1	0
SPI3RST	SPI2RST	Reserved		WWDGRST	Reserved		TIM14RST	TIM13RST	TIM12RST	TIM7RST	TIM6RST	TIM5RST	TIM4RST	TIM3RST	TIM2RST
rw	rw			rw			rw	rw	rw	rw	rw	rw	rw	rw	rw

Bit 31 **UART8RST**: UART8 reset
Set and cleared by software.
0: does not reset UART8
1: resets UART8

Bit 30 **UART7RST**: UART7 reset
Set and cleared by software.
0: does not reset UART7
1: resets UART7

Bit 29 **DACRST:** DAC reset
Set and cleared by software.
0: does not reset the DAC interface
1: resets the DAC interface

Bit 28 **PWRRST:** Power interface reset
Set and cleared by software.
0: does not reset the power interface
1: resets the power interface

Bit 27 Reserved, must be kept at reset value.

Bit 26 **CAN2RST:** CAN2 reset
Set and cleared by software.
0: does not reset CAN2
1: resets CAN2

Bit 25 **CAN1RST:** CAN1 reset
Set and cleared by software.
0: does not reset CAN1
1: resets CAN1

Bit 24 Reserved, must be kept at reset value.

Bit 23 **I2C3RST:** I2C3 reset
Set and cleared by software.
0: does not reset I2C3
1: resets I2C3

Bit 22 **I2C2RST:** I2C2 reset
Set and cleared by software.
0: does not reset I2C2
1: resets I2C2

Bit 21 **I2C1RST:** I2C1 reset
Set and cleared by software.
0: does not reset I2C1
1: resets I2C1

Bit 20 **UART5RST:** UART5 reset
Set and cleared by software.
0: does not reset UART5
1: resets UART5

Bit 19 **UART4RST:** USART4 reset
Set and cleared by software.
0: does not reset UART4
1: resets UART4

Bit 18 **USART3RST:** USART3 reset
Set and cleared by software.
0: does not reset USART3
1: resets USART3

Bit 17 **USART2RST:** USART2 reset
Set and cleared by software.
0: does not reset USART2
1: resets USART2

Bit 16 Reserved, must be kept at reset value.

Bit 15 **SPI3RST:** SPI3 reset
Set and cleared by software.
0: does not reset SPI3
1: resets SPI3

Bit 14 **SPI2RST:** SPI2 reset
Set and cleared by software.
0: does not reset SPI2
1: resets SPI2

Bits 13:12 Reserved, must be kept at reset value.

Bit 11 **WWDGRST:** Window watchdog reset
Set and cleared by software.
0: does not reset the window watchdog
1: resets the window watchdog

Bits 10:9 Reserved, must be kept at reset value.

Bit 8 **TIM14RST:** TIM14 reset
Set and cleared by software.
0: does not reset TIM14
1: resets TIM14

Bit 7 **TIM13RST:** TIM13 reset
Set and cleared by software.
0: does not reset TIM13
1: resets TIM13

Bit 6 **TIM12RST:** TIM12 reset
Set and cleared by software.
0: does not reset TIM12
1: resets TIM12

Bit 5 **TIM7RST:** TIM7 reset
Set and cleared by software.
0: does not reset TIM7
1: resets TIM7

Bit 4 **TIM6RST:** TIM6 reset
Set and cleared by software.
0: does not reset TIM6
1: resets TIM6

Bit 3 **TIM5RST:** TIM5 reset

Set and cleared by software.
0: does not reset TIM5
1: resets TIM5

Bit 2 **TIM4RST:** TIM4 reset

Set and cleared by software.
0: does not reset TIM4
1: resets TIM4

Bit 1 **TIM3RST:** TIM3 reset

Set and cleared by software.
0: does not reset TIM3
1: resets TIM3

Bit 0 **TIM2RST:** TIM2 reset

Set and cleared by software.
0: does not reset TIM2
1: resets TIM2

6.3.9 RCC APB2 peripheral reset register (RCC_APB2RSTR)

Address offset: 0x24

Reset value: 0x0000 0000

Access: no wait state, word, half-word and byte access.

31	30	29	28	27	26	25	24	23	22	21	20	19	18	17	16
Reserved					LTD CRST	Reserved			SAI1 RST	SPI6 RST	SPI5 RST	Res.	TIM11 RST	TIM10 RST	TIM9 RST
					rw				rw	rw	rw		rw	rw	rw

15	14	13	12	11	10	9	8	7	6	5	4	3	2	1	0
Reser-ved	SYSCFG RST	SPI4 RST	SPI1 RST	SDIO RST	Reserved		ADC RST	Reserved		USART 6 RST	USART 1 RST	Reserved		TIM8 RST	TIM1 RST
	rw	rw	rw	rw			rw			rw	rw			rw	rw

Bits 31:27 Reserved, must be kept at reset value.

Bit 26 **LTDCRST**: LTDC reset
This bit is set and reset by software.
0: does not reset LCD-TFT
1: resets LCD-TFT

Bits 27:23 Reserved, must be kept at reset value.

Bit 22 **SAI1RST**: SAI1 reset
This bit is set and reset by software.
0: does not reset SAI1
1: resets SAI1

Bit 21 **SPI6RST**: SPI6 reset
This bit is set and cleared by software.
0: does not reset SPI6
1: resets SPI6

Bit 20 **SPI5RST**: SPI5 reset
This bit is set and cleared by software.
0: does not reset SPI5
1: resets SPI5

Bit 19 Reserved, must be kept at reset value.

Bit 18 **TIM11RST:** TIM11 reset
This bit is set and cleared by software.
0: does not reset TIM11
1: resets TIM14

Bit 17 **TIM10RST:** TIM10 reset
This bit is set and cleared by software.
0: does not reset TIM10
1: resets TIM10

Bit 16 **TIM9RST:** TIM9 reset
This bit is set and cleared by software.
0: does not reset TIM9
1: resets TIM9

Bit 15 Reserved, must be kept at reset value.

Bit 14 **SYSCFGRST:** System configuration controller reset
This bit is set and cleared by software.
0: does not reset the System configuration controller
1: resets the System configuration controller

Bit 13 **SPI4RST**: SPI4 reset
This bit is set and cleared by software.
0: does not reset SPI4
1: resets SPI4

Bit 12 **SPI1RST:** SPI1 reset
This bit is set and cleared by software.
0: does not reset SPI1
1: resets SPI1

Bit 11 **SDIORST:** SDIO reset
This bit is set and cleared by software.
0: does not reset the SDIO module
1: resets the SDIO module

Bits 10:9 Reserved, must be kept at reset value.

Bit 8 **ADCRST:** ADC interface reset (common to all ADCs)
This bit is set and cleared by software.
0: does not reset the ADC interface
1: resets the ADC interface

Bits 7:6 Reserved, must be kept at reset value.

Bit 5 **USART6RST:** USART6 reset
This bit is set and cleared by software.
0: does not reset USART6
1: resets USART6

Bit 4 **USART1RST:** USART1 reset
This bit is set and cleared by software.
0: does not reset USART1
1: resets USART1

Bits 3:2 Reserved, must be kept at reset value.

Bit 1 **TIM8RST:** TIM8 reset
This bit is set and cleared by software.
0: does not reset TIM8
1: resets TIM8

Bit 0 **TIM1RST:** TIM1 reset
This bit is set and cleared by software.
0: does not reset TIM1
1: resets TIM1

6.3.10 RCC AHB1 peripheral clock register (RCC_AHB1ENR)

Address offset: 0x30

Reset value: 0x0010 0000

Access: no wait state, word, half-word and byte access.

31	30	29	28	27	26	25	24	23	22	21	20	19	18	17	16
Reser-ved	OTGHS ULPIEN	OTGHSEN	ETHMACPTPEN	ETHMACRXEN	ETHMACTXEN	ETHMACEN	Res.	**DMA2DEN**	DMA2EN	DMA1EN	CCMDATARAMEN	Res.	BKPSRAMEN	Reserved	
	rw	rw	rw	rw	rw	rw		rw	rw	rw			rw		

15	14	13	12	11	10	9	8	7	6	5	4	3	2	1	0
Reserved			CRCEN	Res.	GPIOKEN	GPIOJEN	GPIOIEN	GPIOHEN	GPIOGEN	GPIOFEN	GPIOEEN	GPIODEN	GPIOCEN	GPIOBEN	GPIOAEN
			rw		rw	rw	rw	rw	rw	rw	rw	rw	rw	rw	rw

Bit 31 Reserved, must be kept at reset value.

Bit 30 **OTGHSULPIEN:** USB OTG HSULPI clock enable

This bit is set and cleared by software. It must be cleared when the OTG_HS is used in FS mode.

0: USB OTG HS ULPI clock disabled

1: USB OTG HS ULPI clock enabled

Bit 29 **OTGHSEN:** USB OTG HS clock enable

This bit is set and cleared by software.

0: USB OTG HS clock disabled

1: USB OTG HS clock enabled

Bit 28 **ETHMACPTPEN:** Ethernet PTP clock enable

This bit is set and cleared by software.

0: Ethernet PTP clock disabled

1: Ethernet PTP clock enabled

Bit 27 **ETHMACRXEN:** Ethernet Reception clock enable

This bit is set and cleared by software.

0: Ethernet Reception clock disabled

1: Ethernet Reception clock enabled

Bit 26 **ETHMACTXEN:** Ethernet Transmission clock enable

This bit is set and cleared by software.

0: Ethernet Transmission clock disabled

1: Ethernet Transmission clock enabled

Bit 25 **ETHMACEN:** Ethernet MAC clock enable

This bit is set and cleared by software.

0: Ethernet MAC clock disabled

1: Ethernet MAC clock enabled

Bit 24 Reserved, must be kept at reset value.

Bit 23 **DMA2DEN:** DMA2D clock enable

This bit is set and cleared by software.

0: DMA2D clock disabled

1: DMA2D clock enabled

Bit 22 **DMA2EN:** DMA2 clock enable
This bit is set and cleared by software.
0: DMA2 clock disabled
1: DMA2 clock enabled

Bit 21 **DMA1EN:** DMA1 clock enable
This bit is set and cleared by software.
0: DMA1 clock disabled
1: DMA1 clock enabled

Bit 20 **CCMDATARAMEN**: CCM data RAM clock enable
This bit is set and cleared by software.
0: CCM data RAM clock disabled
1: CCM data RAM clock enabled

Bit 19 Reserved, must be kept at reset value.

Bit 18 **BKPSRAMEN:** Backup SRAM interface clock enable
This bit is set and cleared by software.
0: Backup SRAM interface clock disabled
1: Backup SRAM interface clock enabled

Bits 17:13 Reserved, must be kept at reset value.

Bit 12 **CRCEN:** CRC clock enable
This bit is set and cleared by software.
0: CRC clock disabled
1: CRC clock enabled

Bit 11 Reserved, must be kept at reset value.

Bit 10 **GPIOKEN:** IO port K clock enable
This bit is set and cleared by software.
0: IO port K clock disabled
1: IO port K clock enabled

Bit 9 **GPIOJEN:** IO port J clock enable
This bit is set and cleared by software.
0: IO port J clock disabled
1: IO port J clock enabled

Bit 8 **GPIOIEN:** IO port I clock enable
This bit is set and cleared by software.
0: IO port I clock disabled
1: IO port I clock enabled

Bit 7 **GPIOHEN:** IO port H clock enable
This bit is set and cleared by software.
0: IO port H clock disabled
1: IO port H clock enabled

Bit 6 **GPIOGEN:** IO port G clock enable
This bit is set and cleared by software.
0: IO port G clock disabled
1: IO port G clock enabled

Bit 5 **GPIOFEN:** IO port F clock enable
This bit is set and cleared by software.
0: IO port F clock disabled
1: IO port F clock enabled

Bit 4 **GPIOEEN:** IO port E clock enable
This bit is set and cleared by software.
0: IO port E clock disabled
1: IO port E clock enabled

Bit 3 **GPIODEN:** IO port D clock enable
This bit is set and cleared by software.
0: IO port D clock disabled
1: IO port D clock enabled

Bit 2 **GPIOCEN:** IO port C clock enable
This bit is set and cleared by software.
0: IO port C clock disabled
1: IO port C clock enabled

Bit 1 **GPIOBEN:** IO port B clock enable
This bit is set and cleared by software.
0: IO port B clock disabled
1: IO port B clock enabled

Bit 0 **GPIOAEN:** IO port A clock enable
This bit is set and cleared by software.
0: IO port A clock disabled
1: IO port A clock enabled

6.3.11 RCC AHB2 peripheral clock enable register (RCC_AHB2ENR)

Address offset: 0x34

Reset value: 0x0000 0000

Access: no wait state, word, half-word and byte access.

31	30	29	28	27	26	25	24	23	22	21	20	19	18	17	16
Reserved															
15	14	13	12	11	10	9	8	7	6	5	4	3	2	1	0
Reserved								OTGFS EN	RNG EN	HASH EN	CRYP EN	Reserved			DCMI EN
								rw	rw	rw	rw				rw

Bits 31:8 Reserved, must be kept at reset value.

Bit 7 **OTGFSEN:** USB OTG FS clock enable
This bit is set and cleared by software.
0: USB OTG FS clock disabled
1: USB OTG FS clock enabled

Bit 6 **RNGEN:** Random number generator clock enable
This bit is set and cleared by software.
0: Random number generator clock disabled
1: Random number generator clock enabled

Bit 5 **HASHEN:** Hash modules clock enable
This bit is set and cleared by software.
0: Hash modules clock disabled
1: Hash modules clock enabled

Bit 4 **CRYPEN:** Cryptographic modules clock enable
This bit is set and cleared by software.
0: cryptographic module clock disabled
1: cryptographic module clock enabled

Bits 3:1 Reserved, must be kept at reset value.

Bit 0 **DCMIEN:** Camera interface enable
This bit is set and cleared by software.
0: Camera interface clock disabled
1: Camera interface clock enabled

6.3.12 RCC AHB3 peripheral clock enable register (RCC_AHB3ENR)

Address offset: 0x38

Reset value: 0x0000 0000

Access: no wait state, word, half-word and byte access.

31	30	29	28	27	26	25	24	23	22	21	20	19	18	17	16
Reserved															
15	14	13	12	11	10	9	8	7	6	5	4	3	2	1	0
Reserved															FMCEN
															rw

Bits 31:1 Reserved, must be kept at reset value.

Bit 0 **FMCEN:** Flexible memory controller module clock enable
This bit is set and cleared by software.
0: FMC module clock disabled
1: FMC module clock enabled

6.3.13 RCC APB1 peripheral clock enable register (RCC_APB1ENR)

Address offset: 0x40

Reset value: 0x0000 0000

Access: no wait state, word, half-word and byte access.

31	30	29	28	27	26	25	24	23	22	21	20	19	18	17	16
UART8 EN	UART7 EN	DAC EN	PWR EN	Reser-ved	CAN2 EN	CAN1 EN	Reser-ved	I2C3 EN	I2C2 EN	I2C1 EN	UART5 EN	UART4 EN	USART 3 EN	USART 2 EN	Reser-ved
rw	rw	rw	rw		rw	rw		rw	rw	rw	rw	rw	rw	rw	
15	14	13	12	11	10	9	8	7	6	5	4	3	2	1	0
SPI3 EN	SPI2 EN	Reserved		WWDG EN	Reserved		TIM14 EN	TIM13 EN	TIM12 EN	TIM7 EN	TIM6 EN	TIM5 EN	TIM4 EN	TIM3 EN	TIM2 EN
rw	rw			rw			rw	rw	rw	rw	rw	rw	rw	rw	rw

Bit 31 **UART8EN**: UART8 clock enable
This bit is set and cleared by software.
0: UART8 clock disabled
1: UART8 clock enabled

Bit 30 **UART7EN**: UART7 clock enable
This bit is set and cleared by software.
0: UART7 clock disabled
1: UART7 clock enabled

Bit 29 **DACEN:** DAC interface clock enable
This bit is set and cleared by software.
0: DAC interface clock disabled
1: DAC interface clock enable

Bit 28 **PWREN:** Power interface clock enable
This bit is set and cleared by software.
0: Power interface clock disabled
1: Power interface clock enable

Bit 27 Reserved, must be kept at reset value.

Bit 26 **CAN2EN:** CAN 2 clock enable
This bit is set and cleared by software.
0: CAN 2 clock disabled
1: CAN 2 clock enabled

Bit 25 **CAN1EN:** CAN 1 clock enable
This bit is set and cleared by software.
0: CAN 1 clock disabled
1: CAN 1 clock enabled

Bit 24 Reserved, must be kept at reset value.

Bit 23 **I2C3EN:** I2C3 clock enable
This bit is set and cleared by software.
0: I2C3 clock disabled
1: I2C3 clock enabled

Bit 22 **I2C2EN:** I2C2 clock enable
This bit is set and cleared by software.
0: I2C2 clock disabled
1: I2C2 clock enabled

Bit 21 **I2C1EN:** I2C1 clock enable
This bit is set and cleared by software.
0: I2C1 clock disabled
1: I2C1 clock enabled

Bit 20 **UART5EN:** UART5 clock enable
This bit is set and cleared by software.
0: UART5 clock disabled
1: UART5 clock enabled

Bit 19 **UART4EN:** UART4 clock enable
This bit is set and cleared by software.
0: UART4 clock disabled
1: UART4 clock enabled

Bit 18 **USART3EN:** USART3 clock enable
This bit is set and cleared by software.
0: USART3 clock disabled
1: USART3 clock enabled

Bit 17 **USART2EN:** USART2 clock enable
This bit is set and cleared by software.
0: USART2 clock disabled
1: USART2 clock enabled

Bit 16 Reserved, must be kept at reset value.

Bit 15 **SPI3EN:** SPI3 clock enable
This bit is set and cleared by software.
0: SPI3 clock disabled
1: SPI3 clock enabled

Bit 14 **SPI2EN:** SPI2 clock enable
This bit is set and cleared by software.
0: SPI2 clock disabled
1: SPI2 clock enabled

Bits 13:12 Reserved, must be kept at reset value.

Bit 11 **WWDGEN:** Window watchdog clock enable
This bit is set and cleared by software.
0: Window watchdog clock disabled
1: Window watchdog clock enabled

Bit 10:9 Reserved, must be kept at reset value.

Bit 8 **TIM14EN:** TIM14 clock enable
This bit is set and cleared by software.
0: TIM14 clock disabled
1: TIM14 clock enabled

Bit 7 **TIM13EN:** TIM13 clock enable
This bit is set and cleared by software.
0: TIM13 clock disabled
1: TIM13 clock enabled

Bit 6 **TIM12EN:** TIM12 clock enable
This bit is set and cleared by software.
0: TIM12 clock disabled
1: TIM12 clock enabled

Bit 5 **TIM7EN:** TIM7 clock enable
This bit is set and cleared by software.
0: TIM7 clock disabled
1: TIM7 clock enabled

Bit 4 **TIM6EN:** TIM6 clock enable
This bit is set and cleared by software.
0: TIM6 clock disabled
1: TIM6 clock enabled

Bit 3 **TIM5EN:** TIM5 clock enable

This bit is set and cleared by software.
0: TIM5 clock disabled
1: TIM5 clock enabled

Bit 2 **TIM4EN:** TIM4 clock enable

This bit is set and cleared by software.
0: TIM4 clock disabled
1: TIM4 clock enabled

Bit 1 **TIM3EN:** TIM3 clock enable

This bit is set and cleared by software.
0: TIM3 clock disabled
1: TIM3 clock enabled

Bit 0 **TIM2EN:** TIM2 clock enable

This bit is set and cleared by software.
0: TIM2 clock disabled
1: TIM2 clock enabled

6.3.14 RCC APB2 peripheral clock enable register (RCC_APB2ENR)

Address offset: 0x44

Reset value: 0x0000 0000

Access: no wait state, word, half-word and byte access.

31	30	29	28	27	26	25	24	23	22	21	20	19	18	17	16
Reserved					LTDC EN	Reserved			SAI1EN	SPI6EN	SPI5EN	Res.	TIM11 EN	TIM10 EN	TIM9 EN
					rw				rw	rw	rw		rw	rw	rw

15	14	13	12	11	10	9	8	7	6	5	4	3	2	1	0
Reser-ved	SYSCFG EN	SPI4EN	SPI1 EN	SDIO EN	ADC3 EN	ADC2 EN	ADC1 EN	Reserved		USART 6 EN	USART 1 EN	Reserved		TIM8 EN	TIM1 EN
	rw	rw	rw	rw	rw	rw	rw			rw	rw			rw	rw

Bits 31:27 Reserved, must be kept at reset value.

Bit 26 **LTDCEN:** LTDC clock enable
This bit is set and cleared by software.
0: LTDC clock disabled
1: LTDC clock enabled

Bits 27: 23 Reserved, must be kept at reset value.

Bit 22 **SAI1EN:** SAI1 clock enable
This bit is set and cleared by software.
0: SAI1 clock disabled
1: SAI1 clock enabled

Bit 21 **SPI6EN:** SPI6 clock enable
This bit is set and cleared by software.
0: SPI6 clock disabled
1: SPI6 clock enabled

Bit 20 **SPI5EN:** SPI5 clock enable
This bit is set and cleared by software.
0: SPI5 clock disabled
1: SPI5 clock enabled

Bit 18 **TIM11EN:** TIM11 clock enable
This bit is set and cleared by software.
0: TIM11 clock disabled
1: TIM11 clock enabled

Bit 17 **TIM10EN:** TIM10 clock enable
This bit is set and cleared by software.
0: TIM10 clock disabled
1: TIM10 clock enabled

Bit 16 **TIM9EN:** TIM9 clock enable
This bit is set and cleared by software.
0: TIM9 clock disabled
1: TIM9 clock enabled

Bit 15 Reserved, must be kept at reset value.

Bit 14 **SYSCFGEN:** System configuration controller clock enable
This bit is set and cleared by software.
0: System configuration controller clock disabled
1: System configuration controller clock enabled

Bit 13 **SPI4EN:** SPI4 clock enable
This bit is set and cleared by software.
0: SPI4 clock disabled
1: SPI4 clock enabled

Bit 12 **SPI1EN:** SPI1 clock enable
This bit is set and cleared by software.
0: SPI1 clock disabled
1: SPI1 clock enabled

Bit 11 **SDIOEN:** SDIO clock enable
This bit is set and cleared by software.
0: SDIO module clock disabled
1: SDIO module clock enabled

Bit 10 **ADC3EN:** ADC3 clock enable
This bit is set and cleared by software.
0: ADC3 clock disabled
1: ADC3 clock enabled

Bit 9 **ADC2EN:** ADC2 clock enable
This bit is set and cleared by software.
0: ADC2 clock disabled
1: ADC2 clock enabled

Bit 8 **ADC1EN:** ADC1 clock enable
This bit is set and cleared by software.
0: ADC1 clock disabled
1: ADC1 clock enabled

Bits 7:6 Reserved, must be kept at reset value.

Bit 5 **USART6EN:** USART6 clock enable
This bit is set and cleared by software.
0: USART6 clock disabled
1: USART6 clock enabled

Bit 4 **USART1EN:** USART1 clock enable
This bit is set and cleared by software.
0: USART1 clock disabled
1: USART1 clock enabled

Bits 3:2 Reserved, must be kept at reset value.

Bit 1 **TIM8EN:** TIM8 clock enable
This bit is set and cleared by software.
0: TIM8 clock disabled
1: TIM8 clock enabled

Bit 0 **TIM1EN:** TIM1 clock enable
This bit is set and cleared by software.
0: TIM1 clock disabled
1: TIM1 clock enabled

6.3.15 RCC AHB1 peripheral clock enable in low power mode register (RCC_AHB1LPENR)

Address offset: 0x50

Reset value: 0x7EEF 97FF

Access: no wait state, word, half-word and byte access.

31	30	29	28	27	26	25	24	23	22	21	20	19	18	17	16
Res.	OTGHS ULPILPEN	OTGHS LPEN	ETHPTP LPEN	ETHRX LPEN	ETHTX LPEN	ETHMAC LPEN	Res.	DMA2D LPEN	DMA2 LPEN	DMA1 LPEN	Res.	SRAM3 LPEN	BKPSRAM LPEN	SRAM2 LPEN	SRAM1 LPEN
	rw	rw	rw	rw	rw	rw		rw	rw	rw		rw	rw	rw	rw

15	14	13	12	11	10	9	8	7	6	5	4	3	2	1	0
FLITF LPEN	Reserved		CRC LPEN	Res.	GPIOK LPEN	GPIOIJ LPEN	GPIOI LPEN	GPIOH LPEN	GPIOG LPEN	GPIOF LPEN	GPIOE LPEN	GPIOD LPEN	GPIOC LPEN	GPIOB LPEN	GPIOA LPEN
rw			rw		rw	rw	rw	rw	rw	rw	rw	rw	rw	rw	rw

Bit 31 Reserved, must be kept at reset value.

Bit 30 **OTGHSULPILPEN:** USB OTG HS ULPI clock enable during Sleep mode

This bit is set and cleared by software. It must be cleared when the OTG_HS is used in FS mode.

0: USB OTG HS ULPI clock disabled during Sleep mode

1: USB OTG HS ULPI clock enabled during Sleep mode

Bit 29 **OTGHSLPEN:** USB OTG HS clock enable during Sleep mode

This bit is set and cleared by software.

0: USB OTG HS clock disabled during Sleep mode

1: USB OTG HS clock enabled during Sleep mode

Bit 28 **ETHMACPTPLPEN:** Ethernet PTP clock enable during Sleep mode

This bit is set and cleared by software.

0: Ethernet PTP clock disabled during Sleep mode

1: Ethernet PTP clock enabled during Sleep mode

Bit 27 **ETHMACRXLPEN:** Ethernet reception clock enable during Sleep mode

This bit is set and cleared by software.

0: Ethernet reception clock disabled during Sleep mode

1: Ethernet reception clock enabled during Sleep mode

Bit 26 **ETHMACTXLPEN:** Ethernet transmission clock enable during Sleep mode

This bit is set and cleared by software.

0: Ethernet transmission clock disabled during sleep mode

1: Ethernet transmission clock enabled during sleep mode

Bit 25 **ETHMACLPEN:** Ethernet MAC clock enable during Sleep mode

This bit is set and cleared by software.

0: Ethernet MAC clock disabled during Sleep mode

1: Ethernet MAC clock enabled during Sleep mode

Bit 24 Reserved, must be kept at reset value.

Bit 23 **DMA2DLPEN:** DMA2D clock enable during Sleep mode
This bit is set and cleared by software.
0: DMA2D clock disabled during Sleep mode
1: DMA2D clock enabled during Sleep mode

Bit 22 **DMA2LPEN:** DMA2 clock enable during Sleep mode
This bit is set and cleared by software.
0: DMA2 clock disabled during Sleep mode
1: DMA2 clock enabled during Sleep mode

Bit 21 **DMA1LPEN:** DMA1 clock enable during Sleep mode
This bit is set and cleared by software.
0: DMA1 clock disabled during Sleep mode
1: DMA1 clock enabled during Sleep mode

Bit 20 Reserved, must be kept at reset value.

Bit 19 **SRAM3LPEN:** SRAM3 interface clock enable during Sleep mode
This bit is set and cleared by software.
0: SRAM3 interface clock disabled during Sleep mode
1: SRAM3 interface clock enabled during Sleep mode

Bit 18 **BKPSRAMLPEN:** Backup SRAM interface clock enable during Sleep mode
This bit is set and cleared by software.
0: Backup SRAM interface clock disabled during Sleep mode
1: Backup SRAM interface clock enabled during Sleep mode

Bit 17 **SRAM2LPEN:** SRAM2 interface clock enable during Sleep mode
This bit is set and cleared by software.
0: SRAM2 interface clock disabled during Sleep mode
1: SRAM2 interface clock enabled during Sleep mode

Bit 16 **SRAM1LPEN:** SRAM1 interface clock enable during Sleep mode
This bit is set and cleared by software.
0: SRAM1 interface clock disabled during Sleep mode
1: SRAM1 interface clock enabled during Sleep mode

Bit 15 **FLITFLPEN:** Flash interface clock enable during Sleep mode
This bit is set and cleared by software.
0: Flash interface clock disabled during Sleep mode
1: Flash interface clock enabled during Sleep mode

Bits 14:13 Reserved, must be kept at reset value.

Bit 12 **CRCLPEN:** CRC clock enable during Sleep mode
This bit is set and cleared by software.
0: CRC clock disabled during Sleep mode
1: CRC clock enabled during Sleep mode

Bit 11 Reserved, must be kept at reset value.

Bit 10 **GPIOKLPEN:** IO port K clock enable during Sleep mode
This bit is set and cleared by software.
0: IO port K clock disabled during Sleep mode
1: IO port K clock enabled during Sleep mode

Bit 9 **GPIOJLPEN:** IO port J clock enable during Sleep mode
This bit is set and cleared by software.
0: IO port J clock disabled during Sleep mode
1: IO port J clock enabled during Sleep mode

Bit 8 **GPIOILPEN:** IO port I clock enable during Sleep mode
This bit is set and cleared by software.
0: IO port I clock disabled during Sleep mode
1: IO port I clock enabled during Sleep mode

Bit 7 **GPIOHLPEN:** IO port H clock enable during Sleep mode
This bit is set and cleared by software.
0: IO port H clock disabled during Sleep mode
1: IO port H clock enabled during Sleep mode

Bits 6 **GPIOGLPEN:** IO port G clock enable during Sleep mode
This bit is set and cleared by software.
0: IO port G clock disabled during Sleep mode
1: IO port G clock enabled during Sleep mode

Bit 5 **GPIOFLPEN:** IO port F clock enable during Sleep mode
This bit is set and cleared by software.
0: IO port F clock disabled during Sleep mode
1: IO port F clock enabled during Sleep mode

Bit 4 **GPIOELPEN:** IO port E clock enable during Sleep mode
Set and cleared by software.
0: IO port E clock disabled during Sleep mode
1: IO port E clock enabled during Sleep mode

Bit 3 **GPIODLPEN:** IO port D clock enable during Sleep mode
This bit is set and cleared by software.
0: IO port D clock disabled during Sleep mode
1: IO port D clock enabled during Sleep mode

Bit 2 **GPIOCLPEN:** IO port C clock enable during Sleep mode
This bit is set and cleared by software.
0: IO port C clock disabled during Sleep mode
1: IO port C clock enabled during Sleep mode

Bit 1 **GPIOBLPEN:** IO port B clock enable during Sleep mode
This bit is set and cleared by software.
0: IO port B clock disabled during Sleep mode
1: IO port B clock enabled during Sleep mode

Bit 0 **GPIOALPEN:** IO port A clock enable during sleep mode
This bit is set and cleared by software.
0: IO port A clock disabled during Sleep mode
1: IO port A clock enabled during Sleep mode

6.3.16 RCC AHB2 peripheral clock enable in low power mode register (RCC_AHB2LPENR)

Address offset: 0x54

Reset value: 0x0000 00F1

Access: no wait state, word, half-word and byte access.

31	30	29	28	27	26	25	24	23	22	21	20	19	18	17	16
Reserved															
15	14	13	12	11	10	9	8	7	6	5	4	3	2	1	0
Reserved								OTGFS LPEN	RNG LPEN	HASH LPEN	CRYP LPEN	Reserved			DCMI LPEN
								rw	rw	rw	rw				rw

Bits 31:8 Reserved, must be kept at reset value.

Bit 7 **OTGFSLPEN:** USB OTG FS clock enable during Sleep mode
This bit is set and cleared by software.
0: USB OTG FS clock disabled during Sleep mode
1: USB OTG FS clock enabled during Sleep mode

Bit 6 **RNGLPEN:** Random number generator clock enable during Sleep mode
This bit is set and cleared by software.
0: Random number generator clock disabled during Sleep mode
1: Random number generator clock enabled during Sleep mode

Bit 5 **HASHLPEN:** Hash modules clock enable during Sleep mode
This bit is set and cleared by software.
0: Hash modules clock disabled during Sleep mode
1: Hash modules clock enabled during Sleep mode

Bit 4 **CRYPLPEN:** Cryptography modules clock enable during Sleep mode
This bit is set and cleared by software.
0: cryptography modules clock disabled during Sleep mode
1: cryptography modules clock enabled during Sleep mode

Bits 3:1 Reserved, must be kept at reset value.

Bit 0 **DCMILPEN:** Camera interface enable during Sleep mode
This bit is set and cleared by software.
0: Camera interface clock disabled during Sleep mode
1: Camera interface clock enabled during Sleep mode

6.3.17 RCC AHB3 peripheral clock enable in low power mode register (RCC_AHB3LPENR)

Address offset: 0x58

Reset value: 0x0000 0001

Access: no wait state, word, half-word and byte access.

31	30	29	28	27	26	25	24	23	22	21	20	19	18	17	16
Reserved															
15	14	13	12	11	10	9	8	7	6	5	4	3	2	1	0
Reserved															FMC LPEN
															rw

Bits 31:1Reserved, must be kept at reset value.

Bit 0 **FMCLPEN:** Flexible memory controller module clock enable during Sleep mode
This bit is set and cleared by software.
0: FMC module clock disabled during Sleep mode
1: FMC module clock enabled during Sleep mode

6.3.18 RCC APB1 peripheral clock enable in low power mode register (RCC_APB1LPENR)

Address offset: 0x60

Reset value: 0xF6FE C9FF

Access: no wait state, word, half-word and byte access.

31	30	29	28	27	26	25	24	23	22	21	20	19	18	17	16
UART8 LPEN	UART7 LPEN	DAC LPEN	PWR LPEN	RESERVED	CAN2 LPEN	CAN1 LPEN	Reser-ved	I2C3 LPEN	I2C2 LPEN	I2C1 LPEN	UART5 LPEN	UART4 LPEN	USART3 LPEN	USART2 LPEN	Reser-ved
rw	rw	rw	rw		rw	rw		rw	rw	rw	rw	rw	rw	rw	
15	14	13	12	11	10	9	8	7	6	5	4	3	2	1	0
SPI3 LPEN	SPI2 LPEN	Reserved		WWDG LPEN	Reserved		TIM14 LPEN	TIM13 LPEN	TIM12 LPEN	TIM7 LPEN	TIM6 LPEN	TIM5 LPEN	TIM4 LPEN	TIM3 LPEN	TIM2 LPEN
rw	rw			rw			rw	rw	rw	rw	rw	rw	rw	rw	rw

Bit 31 **UART8LPEN:** UART8 clock enable during Sleep mode
This bit is set and cleared by software.
0: UART8 clock disabled during Sleep mode
1: UART8 clock enabled during Sleep mode

Bit 30 **UART7LPEN:** UART7 clock enable during Sleep mode
This bit is set and cleared by software.
0: UART7 clock disabled during Sleep mode
1: UART7 clock enabled during Sleep mode

Bit 29 **DACLPEN:** DAC interface clock enable during Sleep mode
This bit is set and cleared by software.
0: DAC interface clock disabled during Sleep mode
1: DAC interface clock enabled during Sleep mode

Bit 28 **PWRLPEN:** Power interface clock enable during Sleep mode
This bit is set and cleared by software.
0: Power interface clock disabled during Sleep mode
1: Power interface clock enabled during Sleep mode

Bit 27 Reserved, must be kept at reset value.

Bit 26 **CAN2LPEN:** CAN 2 clock enable during Sleep mode
This bit is set and cleared by software.
0: CAN 2 clock disabled during sleep mode
1: CAN 2 clock enabled during sleep mode

Bit 25 **CAN1LPEN:** CAN 1 clock enable during Sleep mode
This bit is set and cleared by software.
0: CAN 1 clock disabled during Sleep mode
1: CAN 1 clock enabled during Sleep mode

Bit 24 Reserved, must be kept at reset value.

Bit 23 **I2C3LPEN:** I2C3 clock enable during Sleep mode
This bit is set and cleared by software.
0: I2C3 clock disabled during Sleep mode
1: I2C3 clock enabled during Sleep mode

Bit 22 **I2C2LPEN:** I2C2 clock enable during Sleep mode
This bit is set and cleared by software.
0: I2C2 clock disabled during Sleep mode
1: I2C2 clock enabled during Sleep mode

Bit 21 **I2C1LPEN:** I2C1 clock enable during Sleep mode
This bit is set and cleared by software.
0: I2C1 clock disabled during Sleep mode
1: I2C1 clock enabled during Sleep mode

Bit 20 **UART5LPEN:** UART5 clock enable during Sleep mode
This bit is set and cleared by software.
0: UART5 clock disabled during Sleep mode
1: UART5 clock enabled during Sleep mode

Bit 19 **UART4LPEN:** UART4 clock enable during Sleep mode
This bit is set and cleared by software.
0: UART4 clock disabled during Sleep mode
1: UART4 clock enabled during Sleep mode

Bit 18 **USART3LPEN:** USART3 clock enable during Sleep mode
This bit is set and cleared by software.
0: USART3 clock disabled during Sleep mode
1: USART3 clock enabled during Sleep mode

Bit 17 **USART2LPEN:** USART2 clock enable during Sleep mode
This bit is set and cleared by software.
0: USART2 clock disabled during Sleep mode
1: USART2 clock enabled during Sleep mode

Bit 16 Reserved, must be kept at reset value.

Bit 15 **SPI3LPEN:** SPI3 clock enable during Sleep mode
This bit is set and cleared by software.
0: SPI3 clock disabled during Sleep mode
1: SPI3 clock enabled during Sleep mode

Bit 14 **SPI2LPEN:** SPI2 clock enable during Sleep mode
This bit is set and cleared by software.
0: SPI2 clock disabled during Sleep mode
1: SPI2 clock enabled during Sleep mode

Bits 13:12 Reserved, must be kept at reset value.

Bit 11 **WWDGLPEN:** Window watchdog clock enable during Sleep mode
This bit is set and cleared by software.
0: Window watchdog clock disabled during sleep mode
1: Window watchdog clock enabled during sleep mode

Bits 10:9 Reserved, must be kept at reset value.

Bit 8 **TIM14LPEN:** TIM14 clock enable during Sleep mode
This bit is set and cleared by software.
0: TIM14 clock disabled during Sleep mode
1: TIM14 clock enabled during Sleep mode

Bit 7 **TIM13LPEN:** TIM13 clock enable during Sleep mode
This bit is set and cleared by software.
0: TIM13 clock disabled during Sleep mode
1: TIM13 clock enabled during Sleep mode

Bit 6 **TIM12LPEN:** TIM12 clock enable during Sleep mode
This bit is set and cleared by software.
0: TIM12 clock disabled during Sleep mode
1: TIM12 clock enabled during Sleep mode

Bit 5 **TIM7LPEN:** TIM7 clock enable during Sleep mode
This bit is set and cleared by software.
0: TIM7 clock disabled during Sleep mode
1: TIM7 clock enabled during Sleep mode

Bit 4 **TIM6LPEN:** TIM6 clock enable during Sleep mode
This bit is set and cleared by software.
0: TIM6 clock disabled during Sleep mode
1: TIM6 clock enabled during Sleep mode

Bit 3 **TIM5LPEN:** TIM5 clock enable during Sleep mode
This bit is set and cleared by software.
0: TIM5 clock disabled during Sleep mode
1: TIM5 clock enabled during Sleep mode

Bit 2 **TIM4LPEN:** TIM4 clock enable during Sleep mode
This bit is set and cleared by software.
0: TIM4 clock disabled during Sleep mode
1: TIM4 clock enabled during Sleep mode

Bit 1 **TIM3LPEN:** TIM3 clock enable during Sleep mode
This bit is set and cleared by software.
0: TIM3 clock disabled during Sleep mode
1: TIM3 clock enabled during Sleep mode

Bit 0 **TIM2LPEN:** TIM2 clock enable during Sleep mode
This bit is set and cleared by software.
0: TIM2 clock disabled during Sleep mode
1: TIM2 clock enabled during Sleep mode

6.3.19 RCC APB2 peripheral clock enabled in low power mode register (RCC_APB2LPENR)

Address offset: 0x64

Reset value: 0x0x0477 7F33

Access: no wait state, word, half-word and byte access.

31	30	29	28	27	26	25	24	23	22	21	20	19	18	17	16
Reserved					LTDC LPEN	Reserved			SAI1 LPEN	SPI6 LPEN	SPI5 LPEN	Reser-ved	TIM11 LPEN	TIM10 LPEN	TIM9 LPEN
					rw				rw	rw	rw		rw	rw	rw

15	14	13	12	11	10	9	8	7	6	5	4	3	2	1	0
Reser-ved	SYSCFG LPEN	SPI4 LPEN	SPI1 LPEN	SDIO LPEN	ADC3 LPEN	ADC2 LPEN	ADC1 LPEN	Reserved		USART 6 LPEN	USART 1 LPEN	Reserved		TIM8 LPEN	TIM1 LPEN
	rw	rw	rw	rw	rw	rw	rw			rw	rw			rw	rw

Bits 31:27 Reserved, must be kept at reset value.

Bit 26 **LTDCLPEN:** LTDC clock enable during Sleep mode
This bit is set and cleared by software.
0: LTDC clock disabled during Sleep mode
1: LTDC clock enabled during Sleep mode

Bits 25:23 Reserved, must be kept at reset value.

Bit 22 **SAI1LPEN:** SAI1 clock enable during Sleep mode
This bit is set and cleared by software.
0: SAI1 clock disabled during Sleep mode
1: SAI1 clock enabled during Sleep mode

Bit 21 **SPI6LPEN:** SPI6 clock enable during Sleep mode
This bit is set and cleared by software.
0: SPI6 clock disabled during Sleep mode
1: SPI6 clock enabled during Sleep mode

Bit 20 **SPI5LPEN:** SPI5 clock enable during Sleep mode
This bit is set and cleared by software.
0: SPI5 clock disabled during Sleep mode
1: SPI5 clock enabled during Sleep mode

Bit 19 Reserved, must be kept at reset value.

Bit 18 **TIM11LPEN:** TIM11 clock enable during Sleep mode
This bit is set and cleared by software.
0: TIM11 clock disabled during Sleep mode
1: TIM11 clock enabled during Sleep mode

Bit 17 **TIM10LPEN:** TIM10 clock enable during Sleep mode
This bit is set and cleared by software.
0: TIM10 clock disabled during Sleep mode
1: TIM10 clock enabled during Sleep mode

Bit 16 **TIM9LPEN:** TIM9 clock enable during sleep mode
This bit is set and cleared by software.
0: TIM9 clock disabled during Sleep mode
1: TIM9 clock enabled during Sleep mode

Bit 15 Reserved, must be kept at reset value.

Bit 14 **SYSCFGLPEN:** System configuration controller clock enable during Sleep mode
This bit is set and cleared by software.
0: System configuration controller clock disabled during Sleep mode
1: System configuration controller clock enabled during Sleep mode

Bit 13 **SPI4LPEN:** SPI4 clock enable during Sleep mode
This bit is set and cleared by software.
0: SPI4 clock disabled during Sleep mode
1: SPI4 clock enabled during Sleep mode

Bit 12 **SPI1LPEN:** SPI1 clock enable during Sleep mode
This bit is set and cleared by software.
0: SPI1 clock disabled during Sleep mode
1: SPI1 clock enabled during Sleep mode

Bit 11 **SDIOLPEN:** SDIO clock enable during Sleep mode
This bit is set and cleared by software.
0: SDIO module clock disabled during Sleep mode
1: SDIO module clock enabled during Sleep mode

Bit 10 **ADC3LPEN:** ADC 3 clock enable during Sleep mode
This bit is set and cleared by software.
0: ADC 3 clock disabled during Sleep mode
1: ADC 3 clock disabled during Sleep mode

Bit 9 **ADC2LPEN:** ADC2 clock enable during Sleep mode
This bit is set and cleared by software.
0: ADC2 clock disabled during Sleep mode
1: ADC2 clock disabled during Sleep mode

Bit 8 **ADC1LPEN:** ADC1 clock enable during Sleep mode
This bit is set and cleared by software.
0: ADC1 clock disabled during Sleep mode
1: ADC1 clock disabled during Sleep mode

Bits 7:6 Reserved, must be kept at reset value.

Bit 5 **USART6LPEN:** USART6 clock enable during Sleep mode
This bit is set and cleared by software.
0: USART6 clock disabled during Sleep mode
1: USART6 clock enabled during Sleep mode

Bit 4 **USART1LPEN:** USART1 clock enable during Sleep mode
This bit is set and cleared by software.
0: USART1 clock disabled during Sleep mode
1: USART1 clock enabled during Sleep mode

Bits 3:2 Reserved, must be kept at reset value.

Bit 1 **TIM8LPEN:** TIM8 clock enable during Sleep mode
This bit is set and cleared by software.
0: TIM8 clock disabled during Sleep mode
1: TIM8 clock enabled during Sleep mode

Bit 0 **TIM1LPEN:** TIM1 clock enable during Sleep mode
This bit is set and cleared by software.
0: TIM1 clock disabled during Sleep mode
1: TIM1 clock enabled during Sleep mode

6.3.20 RCC Backup domain control register (RCC_BDCR)

Address offset: 0x70

Reset value: 0x0000 0000, reset by Backup domain reset.
Access: 0 ≤ wait state ≤ 3, word, half-word and byte access
Wait states are inserted in case of successive accesses to this register.

The LSEON, LSEBYP, RTCSEL and RTCEN bits in the *RCC Backup domain control register (RCC_BDCR)* are in the Backup domain. As a result, after Reset, these bits are write-protected and the DBP bit in the *PWR power control register (PWR_CR) for STM32F42xxx and STM32F43xxx* has to be set before these can be modified. Refer to *Section 6.1.1: System reset on page 150* for further information. These bits are only reset after a Backup domain Reset (see *Section 6.1.3: Backup domain reset*). Any internal or external Reset will not have any effect on these bits.

31	30	29	28	27	26	25	24	23	22	21	20	19	18	17	16
Reserved															BDRST
															rw

15	14	13	12	11	10	9	8	7	6	5	4	3	2	1	0
RTCEN	Reserved					RTCSEL[1:0]		Reserved					LSEBYP	LSERDY	LSEON
rw						rw	rw						rw	r	rw

Bits 31:17 Reserved, must be kept at reset value.

Bit 16 **BDRST:** Backup domain software reset
This bit is set and cleared by software.
0: Reset not activated
1: Resets the entire Backup domain

Note: The BKPSRAM is not affected by this reset, the only way of resetting the BKPSRAM is through the Flash interface when a protection level change from level 1 to level 0 is requested.

Bit 15 **RTCEN:** RTC clock enable
This bit is set and cleared by software.
0: RTC clock disabled
1: RTC clock enabled

Bits 14:10 Reserved, must be kept at reset value.

Bits 9:8 **RTCSEL[1:0]:** RTC clock source selection

These bits are set by software to select the clock source for the RTC. Once the RTC clock source has been selected, it cannot be changed anymore unless the Backup domain is reset. The BDRST bit can be used to reset them.

00: No clock
01: LSE oscillator clock used as the RTC clock
10: LSI oscillator clock used as the RTC clock
11: HSE oscillator clock divided by a programmable prescaler (selection through the RTCPRE[4:0] bits in the RCC clock configuration register (RCC_CFGR)) used as the RTC clock

Bits 7:3 Reserved, must be kept at reset value.

Bit 2 **LSEBYP:** External low-speed oscillator bypass

This bit is set and cleared by software to bypass the oscillator. This bit can be written only when the LSE clock is disabled.

0: LSE oscillator not bypassed
1: LSE oscillator bypassed

Bit 1 **LSERDY:** External low-speed oscillator ready

This bit is set and cleared by hardware to indicate when the external 32 kHz oscillator is stable. After the LSEON bit is cleared, LSERDY goes low after 6 external low-speed oscillator clock cycles.

0: LSE clock not ready
1: LSE clock ready

Bit 0 **LSEON:** External low-speed oscillator enable

This bit is set and cleared by software.

0: LSE clock OFF
1: LSE clock ON

6.3.21 RCC clock control & status register (RCC_CSR)

Address offset: 0x74

Reset value: 0x0E00 0000, reset by system reset, except reset flags by power reset only.

Access: 0 ≤ wait state ≤ 3, word, half-word and byte access

Wait states are inserted in case of successive accesses to this register.

31	30	29	28	27	26	25	24	23	22	21	20	19	18	17	16
LPWR RSTF	WWDG RSTF	IWDG RSTF	SFT RSTF	POR RSTF	PIN RSTF	BORRS TF	RMVF	Reserved							
r	r	r	r	r	r	r	rt_w								

15	14	13	12	11	10	9	8	7	6	5	4	3	2	1	0
Reserved														LSIRDY	LSION
														r	rw

Bit 31 **LPWRRSTF:** Low-power reset flag

This bit is set by hardware when a Low-power management reset occurs.
Cleared by writing to the RMVF bit.
0: No Low-power management reset occurred
1: Low-power management reset occurred
For further information on Low-power management reset, refer to *Low-power management reset*.

Bit 30 **WWDGRSTF:** Window watchdog reset flag

This bit is set by hardware when a window watchdog reset occurs.
Cleared by writing to the RMVF bit.
0: No window watchdog reset occurred
1: Window watchdog reset occurred

Bit 29 **IWDGRSTF**: Independent watchdog reset flag

This bit is set by hardware when an independent watchdog reset from V_{DD} domain occurs.
Cleared by writing to the RMVF bit.
0: No watchdog reset occurred
1: Watchdog reset occurred

Bit 28 **SFTRSTF:** Software reset flag

This bit is set by hardware when a software reset occurs.
Cleared by writing to the RMVF bit.
0: No software reset occurred
1: Software reset occurred

Bit 27 **PORRSTF:** POR/PDR reset flag

This bit is set by hardware when a POR/PDR reset occurs.
Cleared by writing to the RMVF bit.
0: No POR/PDR reset occurred
1: POR/PDR reset occurred

Bit 26 **PINRSTF:** PIN reset flag

This bit is set by hardware when a reset from the NRST pin occurs.
Cleared by writing to the RMVF bit.
0: No reset from NRST pin occurred
1: Reset from NRST pin occurred

Bit 25 **BORRSTF:** BOR reset flag

Cleared by software by writing the RMVF bit.
This bit is set by hardware when a POR/PDR or BOR reset occurs.
0: No POR/PDR or BOR reset occurred
1: POR/PDR or BOR reset occurred

Bit 24 **RMVF:** Remove reset flag

This bit is set by software to clear the reset flags.
0: No effect
1: Clear the reset flags

Bits 23:2 Reserved, must be kept at reset value.

Bit 1 **LSIRDY:** Internal low-speed oscillator ready

This bit is set and cleared by hardware to indicate when the internal RC 40 kHz oscillator is stable. After the LSION bit is cleared, LSIRDY goes low after 3 LSI clock cycles.

0: LSI RC oscillator not ready

1: LSI RC oscillator ready

Bit 0 **LSION:** Internal low-speed oscillator enable

This bit is set and cleared by software.

0: LSI RC oscillator OFF

1: LSI RC oscillator ON

6.3.22 RCC spread spectrum clock generation register (RCC_SSCGR)

Address offset: 0x80

Reset value: 0x0000 0000

Access: no wait state, word, half-word and byte access.

The spread spectrum clock generation is available only for the main PLL.

The RCC_SSCGR register must be written either before the main PLL is enabled or after the main PLL disabled.

Note: For full details about PLL spread spectrum clock generation (SSCG) characteristics, refer to the "Electrical characteristics" section in your device datasheet.

31	30	29	28	27	26	25	24	23	22	21	20	19	18	17	16
SSCGEN	SPREADSEL	Reserved		INCSTEP											
rw	rw			rw	rw	rw		rw	rw	rw	rw	rw	rw	rw	rw

15	14	13	12	11	10	9	8	7	6	5	4	3	2	1	0
INCSTEP			MODPER												
rw	rw	rw	rw	rw	rw	rw	rw	rw	rw	rw	rw	rw	rw	rw	rw

Bit 31 **SSCGEN:** Spread spectrum modulation enable

This bit is set and cleared by software.

0: Spread spectrum modulation DISABLE. (To write after clearing CR[24]=PLLON bit)

1: Spread spectrum modulation ENABLE. (To write before setting CR[24]=PLLON bit)

Bit 30 **SPREADSEL:** Spread Select

This bit is set and cleared by software.

To write before to set CR[24]=PLLON bit.

0: Center spread

1: Down spread

Bits 29:28 Reserved, must be kept at reset value.

Bits 27:13 **INCSTEP:** Incrementation step

These bits are set and cleared by software. To write before setting CR[24]=PLLON bit. Configuration input for modulation profile amplitude.

Bits 12:0 **MODPER:** Modulation period

These bits are set and cleared by software. To write before setting CR[24]=PLLON bit. Configuration input for modulation profile period.

6.3.23 RCC PLLI2S configuration register (RCC_PLLI2SCFGR)

Address offset: 0x84

Reset value: 0x2400 3000

Access: no wait state, word, half-word and byte access.

This register is used to configure the PLLI2S clock outputs according to the formulas:

$f_{(VCO\ clock)} = f_{(PLLI2S\ clock\ input)} \times (PLLI2SN / PLLM)$

$f_{(PLL\ I2S\ clock\ output)} = f_{(VCO\ clock)} / PLLI2SR$

31	30	29	28	27	26	25	24	23	22	21	20	19	18	17	16
Reserved	PLLI2SR2	PLLI2SR1	PLLI2SR0	PLLI2SQ				Reserved							
	rw	rw	rw	rw	rw	rw	rw								

15	14	13	12	11	10	9	8	7	6	5	4	3	2	1	0
Reserved	PLLI2SN8	PLLI2SN7	PLLI2SN6	PLLI2SN5	PLLI2SN4	PLLI2SN3	PLLI2SN2	PLLI2SN1	PLLI2SN0	Reserved					
	rw	rw	rw	rw	rw	rw	rw	rw	rw						

Bit 31 Reserved, must be kept at reset value.

Bits 30:28 **PLLI2SR:** PLLI2S division factor for I2S clocks

These bits are set and cleared by software to control the I2S clock frequency. These bits should be written only if the PLLI2S is disabled. The factor must be chosen in accordance with the prescaler values inside the I2S peripherals, to reach 0.3% error when using standard crystals and 0% error with audio crystals. For more information about I2S clock frequency and precision, refer to *Section 28.4.4: Clock generator* in the I2S chapter.

Caution: The I2Ss requires a frequency lower than or equal to 192 MHz to work correctly.

I2S clock frequency = VCO frequency / PLLR with 2 ≤PLLR ≤7

000: PLLR = 0, wrong configuration

001: PLLR = 1, wrong configuration

010: PLLR = 2

...

111: PLLR = 7

Bits 27:24 **PLLI2SQ**: PLLI2S division factor for SAI1 clock

These bits are set and cleared by software to control the SAI1 clock frequency.

They should be written when the PLLI2S is disabled.

SAI1 clock frequency = VCO frequency / PLLI2SQ with 2 <= PLLI2SIQ <= 15

0000: PLLI2SQ = 0, wrong configuration

0001: PLLI2SQ = 1, wrong configuration

0010: PLLI2SQ = 2

0011: PLLI2SQ = 3

0100: PLLI2SQ = 4

0101: PLLI2SQ = 5

...

1111: PLLI2SQ = 15

Bits 23:15 Reserved, must be kept at reset value.

Bits 14:6 **PLLI2SN:** PLLI2S multiplication factor for VCO

These bits are set and cleared by software to control the multiplication factor of the VCO. These bits can be written only when PLLI2S is disabled. Only half-word and word accesses are allowed to write these bits.

Caution: The software has to set these bits correctly to ensure that the VCO output frequency is between 100 and 432 MHz.

VCO output frequency = VCO input frequency × PLLI2SN with 50 ≤PLLI2SN ≤432

000000000: PLLI2SN = 0, wrong configuration
000000001: PLLI2SN = 1, wrong configuration
...
000110010: PLLI2SN = 50
...
001100011: PLLI2SN = 99
001100100: PLLI2SN = 100
001100101: PLLI2SN = 101
001100110: PLLI2SN = 102
...
110110000: PLLI2SN = 432
110110001: PLLI2SN = 433, wrong configuration
...
111111111: PLLI2SN = 511, wrong configuration

Note: Multiplication factors ranging from 50 and 99 are possible for VCO input frequency higher than 1 MHz. However care must be taken that the minimum VCO output frequency respects the value specified above.

Bits 5:0 Reserved, must be kept at reset value.

6.3.24 RCC PLL configuration register (RCC_PLLSAICFGR)

Address offset: 0x88

Reset value: 0x2400 3000

Access: no wait state, word, half-word and byte access.

This register is used to configure the PLLSAI clock outputs according to the formulas:

- $f_{(VCO\ clock)} = f_{(PLLSAI\ clock\ input)} \times (PLLSAIN / PLLM)$
- $f_{(PLLSAI1\ clock\ output)} = f_{(VCO\ clock)} / PLLSAIQ$
- $f_{(PLL\ LCD\ clock\ output)} = f_{(VCO\ clock)} / PLLSAIR$

31	30	29	28	27	26	25	24	23	22	21	20	19	18	17	16
Reserved	PLLSAIR			PLLSAIQ				Reserved							
	rw	rw	rw	rw	rw	rw	rw								

15	14	13	12	11	10	9	8	7	6	5	4	3	2	1	0
Reserved	PLLSAIN									Reserved					
	rw	rw	rw	rw	rw	rw	rw	rw	rw						

Bit 31 Reserved, must be kept at reset value.

Bits 30:28 **PLLSAIR:** PLLSAI division factor for LCD clock

Set and reset by software to control the LCD clock frequency.
These bits should be written when the PLLSAI is disabled.
LCD clock frequency = VCO frequency / PLLSAIR with $2 \leq PLLSAIR \leq 7$
000: PLLSAIR = 0, wrong configuration
001: PLLSAIR = 1, wrong configuration
010: PLLSAIR = 2
...
111: PLLSAIR = 7

Bits 27:24 **PLLSAIQ:** PLLSAI division factor for SAI1 clock

Set and reset by software to control the frequency of SAI1 clock.
These bits should be written when the PLLSAI is disabled.
SAI1 clock frequency = VCO frequency / PLLSAIQ with $2 \leq PLLSAIQ \leq 15$
0000: PLLSAIQ = 0, wrong configuration
0001: PLLSAIQ = 1, wrong configuration
...
0010: PLLSAIQ = 2
0011: PLLSAIQ = 3
0100: PLLSAIQ = 4
0101: PLLSAIQ = 5
...
1111: PLLSAIQ = 15

Bits 23:15 Reserved, must be kept at reset value.

Bits 14:6 **PLLSAIN:** PLLSAI division factor for VCO

These bits are set and cleared by software to control the multiplication factor of the VCO. These bits can be written only when PLLSAI is disabled. Only half-word and word accesses are allowed to write these bits.

Caution: The software has to set these bits correctly to ensure that the VCO output frequency is between 100 and 432 MHz.

VCO output frequency = VCO input frequency × PLLISAIN with 50 ≤PLLISAIN ≤432

000000000: PLLISAIN = 0, wrong configuration

000000001: PLLISAIN = 1, wrong configuration

...

000110010: PLLISAIN = 50

...

001100011: PLLISAIN = 99

001100100: PLLISAIN = 100

001100101: PLLISAIN = 101

001100110: PLLISAIN = 102

...

110110000: PLLISAIN = 432

110110001: PLLISAIN = 433, wrong configuration

...

111111111: PLLISAIN = 511, wrong configuration

Note: Multiplication factors ranging from 50 and 99 are possible for VCO input frequency higher than 1 MHz. However care must be taken that the minimum VCO output frequency respects the value specified above.

Bits 5:0 Reserved, must be kept at reset value

6.3.25 RCC Dedicated Clock Configuration Register (RCC_DCKCFGR)

Address offset: 0x8C

Reset value: 0x0000 0000

Access: no wait state, word, half-word and byte access.

The RCC_DCKCFGR register allows to configure the timer clock prescalers and the PLLSAI and PLLI2S output clock dividers for SAI1 and LTDC peripherals according to the following formula:

$f_{(PLLSAIDIVQ\ clock\ output)} = f_{(PLLSAI_Q)} / PLLSAIDIVQ$

$f_{(PLLSAIDIVR\ clock\ output)} = f_{(PLLSAI_R)} / PLLSAIDIVR$

$f_{(PLLI2SDIVQ\ clock\ output)} = f_{(PLLI2S_Q)} / PLLI2SDIVQ$

31	30	29	28	27	26	25	24	23	22	21	20	19	18	17	16
Reserved							TIMPRE	SAI1BSRC		SAI1ASRC		Reserved		PLLSAIDIVR	
							rw	rw	rw	rw	rw			rw	rw

15	14	13	12	11	10	9	8	7	6	5	4	3	2	1	0
Reserved			PLLSAIDIVQ					Reserved			PLLS2DIVQ				
			rw	rw	rw	rw	rw				rw	rw	rw	rw	rw

Bits 31:25 Reserved, must be kept at reset value.

Bit 24 **TIMPRE**: Timers clocks prescalers selection

This bit is set and reset by software to control the clock frequency of all the timers connected to APB1 and APB2 domain.

0: If the APB prescaler (PPRE1, PPRE2 in the RCC_CFGR register) is configured to a division factor of 1, TIMxCLK = PCLKx. Otherwise, the timer clock frequencies are set to twice to the frequency of the APB domain to which the timers are connected:
TIMxCLK = 2xPCLKx.

1:If the APB prescaler (PPRE1, PPRE2 in the RCC_CFGR register) is configured to a division factor of 1, 2 or 4, TIMxCLK = HCLK. Otherwise, the timer clock frequencies are set to four times to the frequency of the APB domain to which the timers are connected:
TIMxCLK = 4xPCLKx.

Bits 23:22 **SAI1BSRC**: SAI1-B clock source selection

These bits are set and cleared by software to control the SAI1-B clock frequency.
They should be written when the PLLSAI and PLLI2S are disabled.
00: SAI1-B clock frequency = f(PLLSAI_Q) / PLLSAIDIVQ
01: SAI1-B clock frequency = f(PLLI2S_Q) / PLLI2SDIVQ
10: SAI1-B clock frequency = Alternate function input frequency
11: wrong configuration

Bits 21:20 **SAI1ASRC**: SAI1-A clock source selection

These bits are set and cleared by software to control the SAI1-A clock frequency.
They should be written when the PLLSAI and PLLI2S are disabled.
00: SAI1-A clock frequency = f(PLLSAI_Q) / PLLSAIDIVQ
01: SAI1-A clock frequency = f(PLLI2S_Q) / PLLI2SDIVQ
10: SAI1-A clock frequency = Alternate function input frequency
11: wrong configuration

Bits 19: 18 Reserved, must be kept at reset value.

Bits 17:16 **PLLSAIDIVR**: division factor for LCD_CLK

These bits are set and cleared by software to control the frequency of LCD_CLK.
They should be written only if PLLSAI is disabled.
LCD_CLK frequency = f(PLLSAI_R) / PLLSAIDIVR with 2 ≤PLLSAIDIVR ≤16
00: PLLSAIDIVR = /2
01: PLLSAIDIVR = /4
10: PLLSAIDIVR = /8
11: PLLSAIDIVR = /16

Bits 15: 13 Reserved, must be kept at reset value.

Bits 12:8 **PLLSAIDIVQ**: PLLSAI division factor for SAI1 clock

These bits are set and reset by software to control the SAI1 clock frequency.
They should be written only if PLLSAI is disabled.
SAI1 clock frequency = f(PLLSAI_Q) / PLLSAIDIVQ with 1 ≤PLLSAIDIVQ ≤31
00000: PLLSAIDIVQ = /1
00001: PLLSAIDIVQ = /2
00010: PLLSAIDIVQ = /3
00011: PLLSAIDIVQ = /4
00100: PLLSAIDIVQ = /5
...
11111: PLLSAIDIVQ = /32

Bits 7:5 Reserved, must be kept at reset value.

Bits 4:0 **PLLI2SDIVQ**: PLLI2S division factor for SAI1 clock

These bits are set and reset by software to control the SAI1 clock frequency.
They should be written only if PLLI2S is disabled.
SAI1 clock frequency = f(PLLI2S_Q) / PLLI2SDIVQ with 1 <= PLLI2SDIVQ <= 31
00000: PLLI2SDIVQ = /1
00001: PLLI2SDIVQ = /2
00010: PLLI2SDIVQ = /3
00011: PLLI2SDIVQ = /4
00100: PLLI2SDIVQ = /5
...
11111: PLLI2SDIVQ = /32

6.3.26 RCC register map

Table 33 gives the register map and reset values.

Table 33. RCC register map and reset values for STM32F42xxx and STM32F43xxx

Addr. offset	Register name	31	30	29	28	27	26	25	24	23	22	21	20	19	18	17	16	15	14	13	12	11	10	9	8	7	6	5	4	3	2	1	0
0x00	RCC_CR	Reserved		PLL SAIRDY	PLL SAION	PLL I2SRDY	PLL I2SON	PLL RDY	PLL ON	Reserved				CSSON	HSEBYP	HSERDY	HSEON	HSICAL 7	HSICAL 6	HSICAL 5	HSICAL 4	HSICAL 3	HSICAL 2	HSICAL 1	HSICAL 0	HSITRIM 4	HSITRIM 3	HSITRIM 2	HSITRIM 1	HSITRIM 0	Reserved	HSIRDY	HSION
0x04	RCC_PLLCFGR	Reserved				PLLQ 3	PLLQ 2	PLLQ 1	PLLQ 0	Reserved	PLLSRC	Reserved				PLLP 1	PLLP 0	Reserved	PLLN 8	PLLN 7	PLLN 6	PLLN 5	PLLN 4	PLLN 3	PLLN 2	PLLN 1	PLLN 0	PLLM 5	PLLM 4	PLLM 3	PLLM 2	PLLM 1	PLLM 0
0x08	RCC_CFGR	MCO2 1	MCO2 0	MCO2PRE2	MCO2PRE1	MCO2PRE0	MCO1PRE2	MCO1PRE1	MCO1PRE0	I2SSRC	MCO1 1	MCO1 0	RTCPRE 4	RTCPRE 3	RTCPRE 2	RTCPRE 1	RTCPRE 0	PPRE2 2	PPRE2 1	PPRE2 0	PPRE1 2	PPRE1 1	PPRE1 0	Reserved		HPRE 3	HPRE 2	HPRE 1	HPRE 0	SWS 1	SWS 0	SW 1	SW 0
0x0C	RCC_CIR	Reserved								CSSC	PLLSAIRDYC	PLLI2SRDYC	PLLRDYC	HSERDYC	HSIRDYC	LSERDYC	LSIRDYC	Reserved	PLLSAIRDYIE	PLLI2SRDYIE	PLLRDYIE	HSERDYIE	HSIRDYIE	LSERDYIE	LSIRDYIE	CSSF	PLLSAIRDYF	PLLI2SRDYF	PLLRDYF	HSERDYF	HSIRDYF	LSERDYF	LSIRDYF
0x10	RCC_AHB1RSTR	Reserved		OTGHSRST	Reserved			ETHMACRST	Reserved	DMA2DRST	DMA2RST	DMA1RST	Reserved								CRCRST	Reserved	GPIOKRST	GPIOJRST	GPIOIRST	GPIOHRST	GPIOGRST	GPIOFRST	GPIOERST	GPIODRST	GPIOCRST	GPIOBRST	GPIOARST
0x14	RCC_AHB2RSTR	Reserved																								OTGFSRST	RNGRST	HSAHRST	CRYPRST	Reserved			DCMIRST
0x18	RCC_AHB3RSTR	Reserved																															FMCRST
0x1C	Reserved	Reserved																															
0x20	RCC_APB1RSTR	UART8RST	UART7RST	DACRST	PWRRST	Reserved	CAN2RST	CAN1RST	Reserved	I2C3RST	I2C2RST	I2C1RST	UART5RST	UART4RST	UART3RST	UART2RST	Reserved	SPI3RST	SPI2RST	Reserved		WWDGRST	Reserved		TIM14RST	TIM13RST	TIM12RST	TIM7RST	TIM6RST	TIM5RST	TIM4RST	TIM3RST	TIM2RST
0x24	RCC_APB2RSTR	Reserved				LTDCRST	Reserved			SAI1RST	SPI6RST	SPI5RST	Reserved	TIM11RST	TIM10RST	TIM9RST	Reserved	SYSCFGRST	SP45RST	SPI1RST	SDIORST	Reserved		ADCRST	Reserved		USART6RST	USART1RST	Reserved		TIM8RST	TIM1RST
0x28	Reserved	Reserved																															
0x2C	Reserved	Reserved																															
0x30	RCC_AHB1ENR	Reserved	OTGHSULPIEN	OTGHSEN	ETHMACPTPEN	ETHMACRXEN	ETHMACTXEN	ETHMACEN	Reserved	DMA2DEN	DMA2EN	DMA1EN	CCMDATARAMEN	Reserved	BKPSRAMEN	Reserved					CRCEN	Reserved	GPIOKEN	GPIOJEN	GPIOIEN	GPIOHEN	GPIOGEN	GPIOFEN	GPIOEEN	GPIODEN	GPIOCEN	GPIOBEN	GPIOAEN
0x34	RCC_AHB2ENR	Reserved																								OTGFSEN	RNGEN	HASHEN	CRYPEN	Reserved			DCMIEN
0x38	RCC_AHB3ENR	Reserved																															FMCEN
0x3C	Reserved	Reserved																															

Table 33. RCC register map and reset values for STM32F42xxx and STM32F43xxx (continued)

Addr. offset	Register name	31	30	29	28	27	26	25	24	23	22	21	20	19	18	17	16	15	14	13	12	11	10	9	8	7	6	5	4	3	2	1	0
0x40	RCC_ APB1ENR	UART8EN	UART7EN	DACEN	PWREN	Reserved	CAN2EN	CAN1EN	Reserved	I2C3EN	I2C2EN	I2C1EN	UART5EN	UART4EN	USART3EN	USART2EN	Reserved	SPI3EN	SPI2EN	Reserved		WWDGEN	Reserved		TIM14EN	TIM13EN	TIM12EN	TIM7EN	TIM6EN	TIM5EN	TIM4EN	TIM3EN	TIM2EN
0x44	RCC_ APB2ENR	Reserved					LTDCEN	Reserved			SAI1EN	SPI6EN	SPI5EN	Reserved	TIM11EN	TIM10EN	TIM9EN	Reserved	SYSCFGEN	SPI4EN	SPI1EN	SDIOEN	ADC3EN	ADC2EN	ADC1EN	Reserved		USART6EN	USART1EN	Reserved		TIM8EN	TIM1EN
0x48	Reserved	Reserved																															
0x4C	Reserved	Reserved																															
0x50	RCC_AHB1LP ENR	Reserved	OTGHSULPILPEN	OTGHSLPEN	ETHMACPTPLPEN	ETHMACRXLPEN	ETHMACTXLPEN	ETHMACLPEN	Reserved	DMA2DLPEN	DMA2LPEN	DMA1LPEN	Reserved	SRAM3LPEN	BKPSRAMLPEN	SRAM2LPEN	SRAM1LPEN	FLITFLPEN	Reserved		CRCLPEN	Reserved	GPIOKLPEN	GPIOJLPEN	GPIOILPEN	GPIOHLPEN	GPIOGLPEN	GPIOFLPEN	GPIOELPEN	GPIODLPEN	GPIOCLPEN	GPIOBLPEN	GPIOALPEN
0x54	RCC_AHB2LP ENR	Reserved																								OTGFSLPEN	RNGLPEN	HASHLPEN	CRYPLPEN	Reserved			DCMILPEN
0x58	RCC_AHB3LP ENR	Reserved																															FMCLPEN
0x5C	Reserved	Reserved																															
0x60	RCC_APB1LP ENR	UART8LPEN	UART7LPEN	DACLPEN	PWRLPEN	Reserved	CAN2LPEN	CAN1LPEN	Reserved	I2C3LPEN	I2C2LPEN	I2C1LPEN	UART5LPEN	UART4LPEN	USART3LPEN	USART2LPEN	Reserved	SPI3LPEN	SPI2LPEN	Reserved		WWDGLPEN	Reserved		TIM14LPEN	TIM13LPEN	TIM12LPEN	TIM7LPEN	TIM6LPEN	TIM5LPEN	TIM4LPEN	TIM3LPEN	TIM2LPEN
0x64	RCC_APB2LP ENR	Reserved					LTDCLPEN	Reserved			SAI1LPEN	SPI6LPEN	SPI5LPEN	Reserved	TIM11LPEN	TIM10LPEN	TIM9LPEN	Reserved	SYSCFGLPEN	SPI4LPEN	SPI1LPEN	SDIOLPEN	ADC3LPEN	ADC2LPEN	ADC1LPEN	Reserved		USART6LPEN	USART1LPEN	Reserved		TIM8LPEN	TIM1LPEN
0x68	Reserved	Reserved																															
0x6C	Reserved	Reserved																															
0x70	RCC_BDCR	Reserved															BDRST	RTCEN	Reserved					RTCSEL 1	RTCSEL 0	Reserved						LSEBYP	LSERDY	LSEON
0x74	RCC_CSR	LPWRRSTF	WWDGRSTF	WDGRSTF	SFTRSTF	PORRSTF	PADRSTF	BORRSTF	RMVF	Reserved																						LSIRDY	LSION
0x78	Reserved	Reserved																															
0x7C	Reserved	Reserved																															
0x80	RCC_SSCGR	SSCGEN	SPREADSEL	Reserved			INCSTEP														MODPER												
0x84	RCC_PLLI2SC FGR	Reserved	PLLI2SRx				PLLI2SQ			Reserved								PLLI2SNx										Reserved					

Table 33. RCC register map and reset values for STM32F42xxx and STM32F43xxx (continued)

Addr. offset	Register name	31	30	29	28	27	26	25	24	23	22	21	20	19	18	17	16	15	14	13	12	11	10	9	8	7	6	5	4	3	2	1	0
0x88	RCC_PLLSAICFGR		PLLSAIR				PLLSAIQ			Reserved									PLLSAIN									Reserved					
0x8C	RCC_DCKCFGR	Reserved							TIMPRE	SAI1BSCR		SAI1ASCR		Reserved		PLLSAIDIVR		Reserved	PLLSAIDIVQ					Reserved				PLLI2SDIVQ					

Refer to *Section 2.3: Memory map* for the register boundary addresses.

7 Reset and clock control for STM32F405xx/07xx and STM32F415xx/17xx(RCC)

7.1 Reset

There are three types of reset, defined as system Reset, power Reset and backup domain Reset.

7.1.1 System reset

A system reset sets all registers to their reset values except the reset flags in the clock controller CSR register and the registers in the Backup domain (see *Figure 20*).

A system reset is generated when one of the following events occurs:

1. A low level on the NRST pin (external reset)
2. Window watchdog end of count condition (WWDG reset)
3. Independent watchdog end of count condition (IWDG reset)
4. A software reset (SW reset) (see *Software reset*)
5. Low-power management reset (see *Low-power management reset*)

Software reset

The reset source can be identified by checking the reset flags in the *RCC clock control & status register (RCC_CSR)*.

The SYSRESETREQ bit in Cortex®-M4 with FPU Application Interrupt and Reset Control Register must be set to force a software reset on the device. Refer to the Cortex®-M4 with FPU technical reference manual for more details.

Low-power management reset

There are two ways of generating a low-power management reset:

1. Reset generated when entering the Standby mode:

   This type of reset is enabled by resetting the nRST_STDBY bit in the user option bytes. In this case, whenever a Standby mode entry sequence is successfully executed, the device is reset instead of entering the Standby mode.

2. Reset when entering the Stop mode:

   This type of reset is enabled by resetting the nRST_STOP bit in the user option bytes. In this case, whenever a Stop mode entry sequence is successfully executed, the device is reset instead of entering the Stop mode.

7.1.2 Power reset

A power reset is generated when one of the following events occurs:

1. Power-on/power-down reset (POR/PDR reset) or brownout (BOR) reset
2. When exiting the Standby mode

A power reset sets all registers to their reset values except the Backup domain (see *Figure 20*)

These sources act on the NRST pin and it is always kept low during the delay phase. The RESET service routine vector is fixed at address 0x0000_0004 in the memory map.

The system reset signal provided to the device is output on the NRST pin. The pulse generator guarantees a minimum reset pulse duration of 20 µs for each internal reset source. In case of an external reset, the reset pulse is generated while the NRST pin is asserted low.

Figure 20. Simplified diagram of the reset circuit

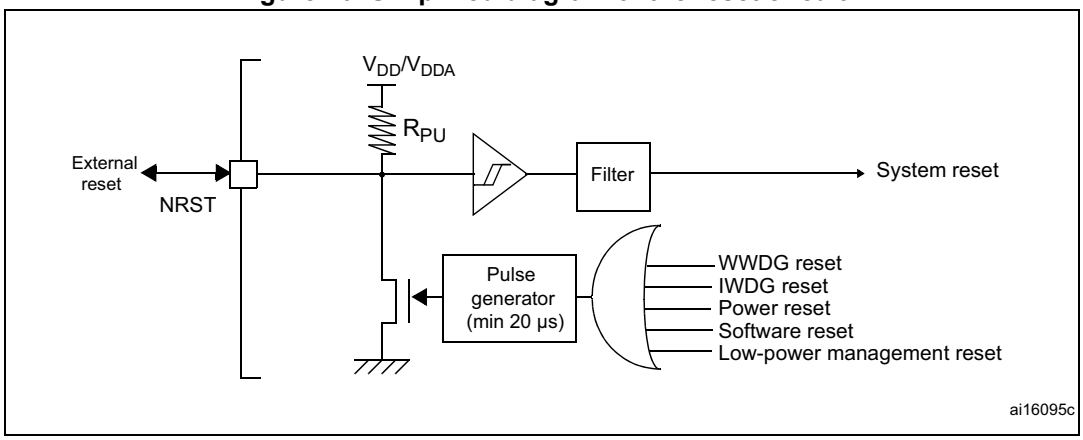

The Backup domain has two specific resets that affect only the Backup domain (see *Figure 20*).

7.1.3 Backup domain reset

The backup domain reset sets all RTC registers and the RCC_BDCR register to their reset values. The BKPSRAM is not affected by this reset. The only way of resetting the BKPSRAM is through the Flash interface by requesting a protection level change from 1 to 0.

A backup domain reset is generated when one of the following events occurs:

1. Software reset, triggered by setting the BDRST bit in the *RCC Backup domain control register (RCC_BDCR)*.
2. V_{DD} or V_{BAT} power on, if both supplies have previously been powered off.

7.2 Clocks

Three different clock sources can be used to drive the system clock (SYSCLK):

- HSI oscillator clock
- HSE oscillator clock
- Main PLL (PLL) clock

The devices have the two following secondary clock sources:

- 32 kHz low-speed internal RC (LSI RC) which drives the independent watchdog and, optionally, the RTC used for Auto-wakeup from the Stop/Standby mode.
- 32.768 kHz low-speed external crystal (LSE crystal) which optionally drives the RTC clock (RTCCLK)

Each clock source can be switched on or off independently when it is not used, to optimize power consumption.

Figure 21. Clock tree

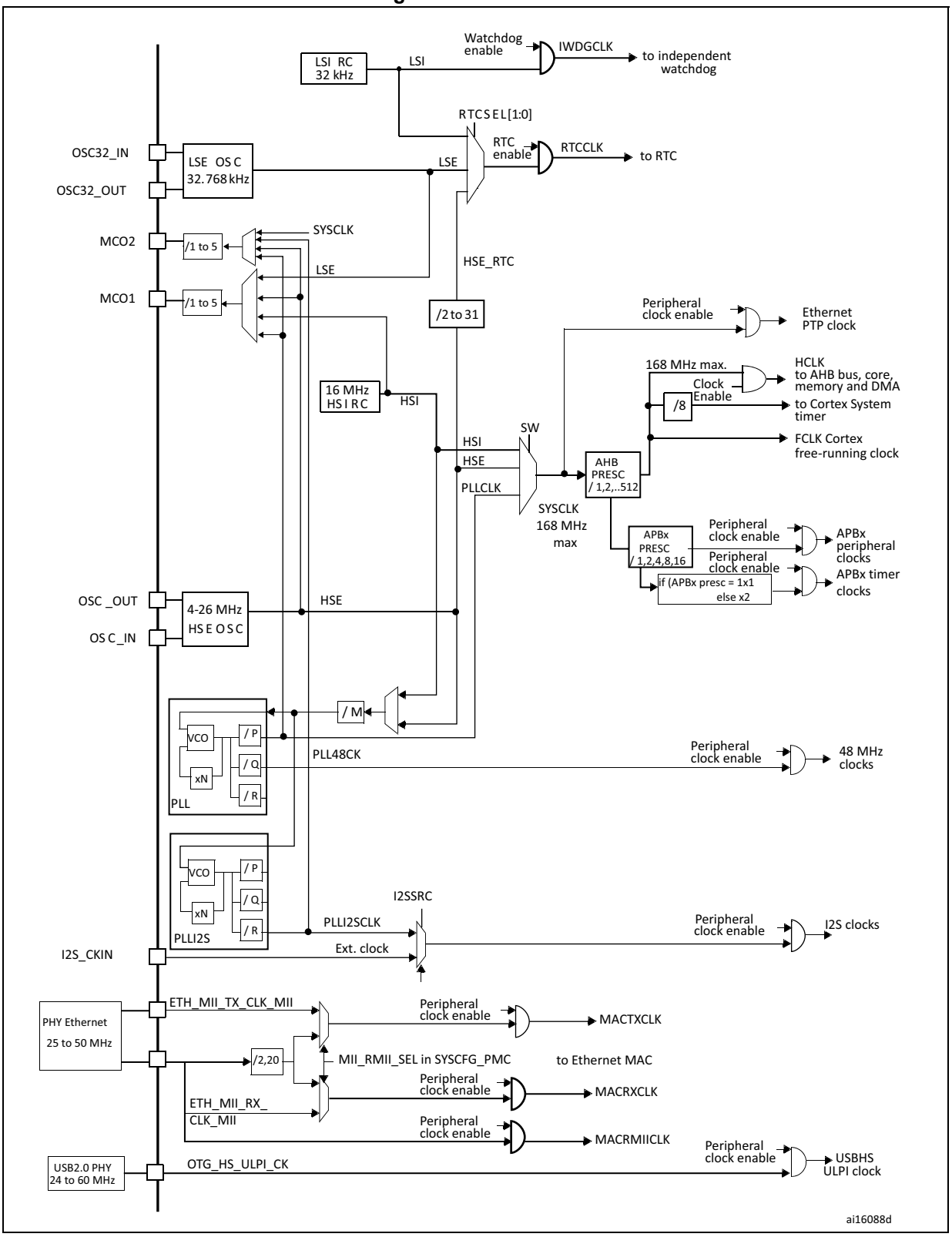

1. For full details about the internal and external clock source characteristics, refer to the Electrical characteristics section in the device datasheet.

The clock controller provides a high degree of flexibility to the application in the choice of the external crystal or the oscillator to run the core and peripherals at the highest frequency and, guarantee the appropriate frequency for peripherals that need a specific clock like Ethernet, USB OTG FS and HS, I2S and SDIO.

Several prescalers are used to configure the AHB frequency, the high-speed APB (APB2) and the low-speed APB (APB1) domains. The maximum frequency of the AHB domain is 168 MHz. The maximum allowed frequency of the high-speed APB2 domain is 84 MHz. The maximum allowed frequency of the low-speed APB1 domain is 42 MHz

All peripheral clocks are derived from the system clock (SYSCLK) except for:

- The USB OTG FS clock (48 MHz), the random analog generator (RNG) clock (≤48 MHz) and the SDIO clock (≤48 MHz) which are coming from a specific output of PLL (PLL48CLK)
- The I2S clock

  To achieve high-quality audio performance, the I2S clock can be derived either from a specific PLL (PLLI2S) or from an external clock mapped on the I2S_CKIN pin. For more information about I2S clock frequency and precision, refer to *Section 28.4.4: Clock generator*.
- The USB OTG HS (60 MHz) clock which is provided from the external PHY
- The Ethernet MAC clocks (TX, RX and RMII) which are provided from the external PHY. For further information on the Ethernet configuration, please refer to *Section 33.4.4: MII/RMII selection* in the Ethernet peripheral description. When the Ethernet is used, the AHB clock frequency must be at least 25 MHz.

The RCC feeds the external clock of the Cortex System Timer (SysTick) with the AHB clock (HCLK) divided by 8. The SysTick can work either with this clock or with the Cortex clock (HCLK), configurable in the SysTick control and status register.

The timer clock frequencies are automatically set by hardware. There are two cases:

1. If the APB prescaler is 1, the timer clock frequencies are set to the same frequency as that of the APB domain to which the timers are connected.
2. Otherwise, they are set to twice (×2) the frequency of the APB domain to which the timers are connected.

FCLK acts as Cortex®-M4 with FPU free-running clock. For more details, refer to the Cortex®-M4 with FPU technical reference manual.

7.2.1 HSE clock

The high speed external clock signal (HSE) can be generated from two possible clock sources:

- HSE external crystal/ceramic resonator
- HSE external user clock

The resonator and the load capacitors have to be placed as close as possible to the oscillator pins in order to minimize output distortion and startup stabilization time. The loading capacitance values must be adjusted according to the selected oscillator.

Figure 22. HSE/ LSE clock sources

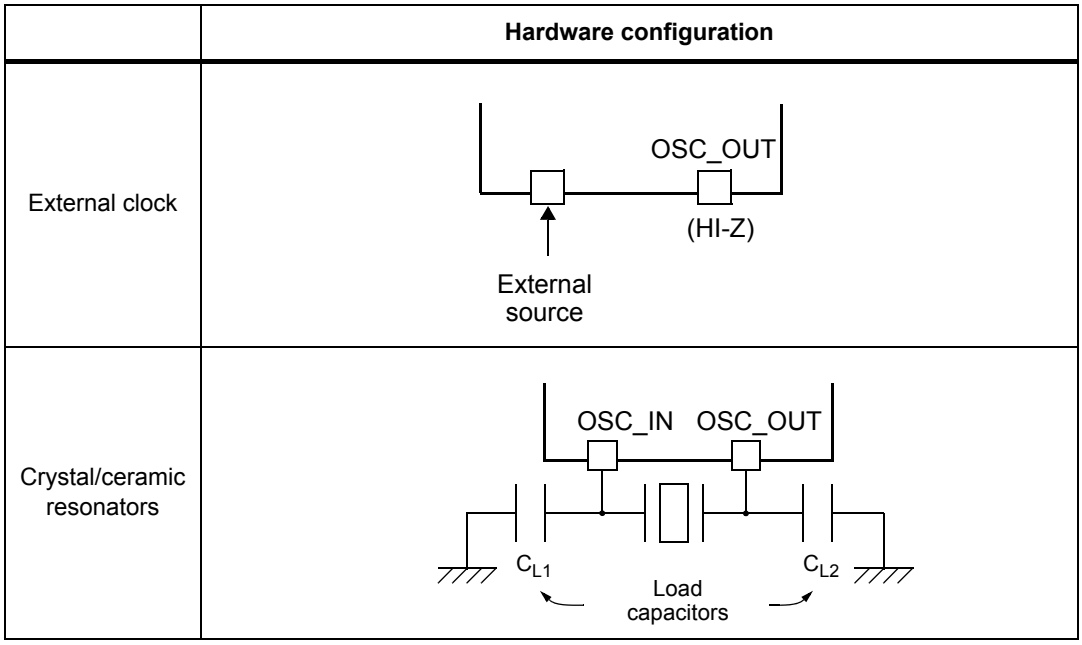

External source (HSE bypass)

In this mode, an external clock source must be provided. You select this mode by setting the HSEBYP and HSEON bits in the *RCC clock control register (RCC_CR)*. The external clock signal (square, sinus or triangle) with ~50% duty cycle has to drive the OSC_IN pin while the OSC_OUT pin should be left HI-Z. See *Figure 22*.

External crystal/ceramic resonator (HSE crystal)

The HSE has the advantage of producing a very accurate rate on the main clock.

The associated hardware configuration is shown in *Figure 22*. Refer to the electrical characteristics section of the *datasheet* for more details.

The HSERDY flag in the *RCC clock control register (RCC_CR)* indicates if the high-speed external oscillator is stable or not. At startup, the clock is not released until this bit is set by hardware. An interrupt can be generated if enabled in the *RCC clock interrupt register (RCC_CIR)*.

The HSE Crystal can be switched on and off using the HSEON bit in the *RCC clock control register (RCC_CR)*.

7.2.2 HSI clock

The HSI clock signal is generated from an internal 16 MHz RC oscillator and can be used directly as a system clock, or used as PLL input.

The HSI RC oscillator has the advantage of providing a clock source at low cost (no external components). It also has a faster startup time than the HSE crystal oscillator however, even with calibration the frequency is less accurate than an external crystal oscillator or ceramic resonator.

Calibration

RC oscillator frequencies can vary from one chip to another due to manufacturing process variations, this is why each device is factory calibrated by ST for 1% accuracy at T_A= 25 °C.

After reset, the factory calibration value is loaded in the HSICAL[7:0] bits in the *RCC clock control register (RCC_CR)*.

If the application is subject to voltage or temperature variations this may affect the RC oscillator speed. You can trim the HSI frequency in the application using the HSITRIM[4:0] bits in the *RCC clock control register (RCC_CR)*.

The HSIRDY flag in the *RCC clock control register (RCC_CR)* indicates if the HSI RC is stable or not. At startup, the HSI RC output clock is not released until this bit is set by hardware.

The HSI RC can be switched on and off using the HSION bit in the *RCC clock control register (RCC_CR)*.

The HSI signal can also be used as a backup source (Auxiliary clock) if the HSE crystal oscillator fails. Refer to *Section 7.2.7: Clock security system (CSS) on page 220*.

7.2.3 PLL configuration

The STM32F4xx devices feature two PLLs:

- A main PLL (PLL) clocked by the HSE or HSI oscillator and featuring two different output clocks:
  - The first output is used to generate the high speed system clock (up to 168 MHz)
  - The second output is used to generate the clock for the USB OTG FS (48 MHz), the random analog generator (≤48 MHz) and the SDIO (≤48 MHz).
- A dedicated PLL (PLLI2S) used to generate an accurate clock to achieve high-quality audio performance on the I2S interface.

Since the main-PLL configuration parameters cannot be changed once PLL is enabled, it is recommended to configure PLL before enabling it (selection of the HSI or HSE oscillator as PLL clock source, and configuration of division factors M, N, P, and Q).

The PLLI2S uses the same input clock as PLL (PLLM[5:0] and PLLSRC bits are common to both PLLs). However, the PLLI2S has dedicated enable/disable and division factors (N and R) configuration bits. Once the PLLI2S is enabled, the configuration parameters cannot be changed.

The two PLLs are disabled by hardware when entering Stop and Standby modes, or when an HSE failure occurs when HSE or PLL (clocked by HSE) are used as system clock. *RCC PLL configuration register (RCC_PLLCFGR)* and *RCC clock configuration register (RCC_CFGR)* can be used to configure PLL and PLLI2S, respectively.

7.2.4 LSE clock

The LSE clock is generated from a 32.768 kHz low-speed external crystal or ceramic resonator. It has the advantage providing a low-power but highly accurate clock source to the real-time clock peripheral (RTC) for clock/calendar or other timing functions.

The LSE oscillator is switched on and off using the LSEON bit in *RCC Backup domain control register (RCC_BDCR)*.

The LSERDY flag in the *RCC Backup domain control register (RCC_BDCR)* indicates if the LSE crystal is stable or not. At startup, the LSE crystal output clock signal is not released until this bit is set by hardware. An interrupt can be generated if enabled in the *RCC clock interrupt register (RCC_CIR)*.

External source (LSE bypass)

In this mode, an external clock source must be provided. It must have a frequency up to 1 MHz. You select this mode by setting the LSEBYP and LSEON bits in the *RCC Backup domain control register (RCC_BDCR)*. The external clock signal (square, sinus or triangle) with ~50% duty cycle has to drive the OSC32_IN pin while the OSC32_OUT pin should be left HI-Z. See *Figure 22*.

7.2.5 LSI clock

The LSI RC acts as an low-power clock source that can be kept running in Stop and Standby mode for the independent watchdog (IWDG) and Auto-wakeup unit (AWU). The clock frequency is around 32 kHz. For more details, refer to the electrical characteristics section of the datasheets.

The LSI RC can be switched on and off using the LSION bit in the *RCC clock control & status register (RCC_CSR)*.

The LSIRDY flag in the *RCC clock control & status register (RCC_CSR)* indicates if the low-speed internal oscillator is stable or not. At startup, the clock is not released until this bit is set by hardware. An interrupt can be generated if enabled in the *RCC clock interrupt register (RCC_CIR)*.

7.2.6 System clock (SYSCLK) selection

After a system reset, the HSI oscillator is selected as the system clock. When a clock source is used directly or through PLL as the system clock, it is not possible to stop it.

A switch from one clock source to another occurs only if the target clock source is ready (clock stable after startup delay or PLL locked). If a clock source that is not yet ready is selected, the switch occurs when the clock source is ready. Status bits in the *RCC clock control register (RCC_CR)* indicate which clock(s) is (are) ready and which clock is currently used as the system clock.

7.2.7 Clock security system (CSS)

The clock security system can be activated by software. In this case, the clock detector is enabled after the HSE oscillator startup delay, and disabled when this oscillator is stopped.

If a failure is detected on the HSE clock, this oscillator is automatically disabled, a clock failure event is sent to the break inputs of advanced-control timers TIM1 and TIM8, and an interrupt is generated to inform the software about the failure (clock security system interrupt CSSI), allowing the MCU to perform rescue operations. The CSSI is linked to the Cortex®-M4 with FPU NMI (non-maskable interrupt) exception vector.

Note: When the CSS is enabled, if the HSE clock happens to fail, the CSS generates an interrupt, which causes the automatic generation of an NMI. The NMI is executed indefinitely unless the CSS interrupt pending bit is cleared. As a consequence, the application has to clear the CSS interrupt in the NMI ISR by setting the CSSC bit in the Clock interrupt register (RCC_CIR).

If the HSE oscillator is used directly or indirectly as the system clock (indirectly meaning that it is directly used as PLL input clock, and that PLL clock is the system clock) and a failure is detected, then the system clock switches to the HSI oscillator and the HSE oscillator is disabled.

If the HSE oscillator clock was the clock source of PLL used as the system clock when the failure occurred, PLL is also disabled. In this case, if the PLLI2S was enabled, it is also disabled when the HSE fails.

7.2.8 RTC/AWU clock

Once the RTCCLK clock source has been selected, the only possible way of modifying the selection is to reset the power domain.

The RTCCLK clock source can be either the HSE 1 MHz (HSE divided by a programmable prescaler), the LSE or the LSI clock. This is selected by programming the RTCSEL[1:0] bits in the *RCC Backup domain control register (RCC_BDCR)* and the RTCPRE[4:0] bits in *RCC clock configuration register (RCC_CFGR)*. This selection cannot be modified without resetting the Backup domain.

If the LSE is selected as the RTC clock, the RTC operates normally if the backup or the system supply disappears. If the LSI is selected as the AWU clock, the AWU state is not guaranteed if the system supply disappears. If the HSE oscillator divided by a value between 2 and 31 is used as the RTC clock, the RTC state is not guaranteed if the backup or the system supply disappears.

The LSE clock is in the Backup domain, whereas the HSE and LSI clocks are not. As a consequence:

- If LSE is selected as the RTC clock:
  - The RTC continues to work even if the V_{DD} supply is switched off, provided the V_{BAT} supply is maintained.
- If LSI is selected as the Auto-wakeup unit (AWU) clock:
  - The AWU state is not guaranteed if the V_{DD} supply is powered off. Refer to *Section 7.2.5: LSI clock on page 220* for more details on LSI calibration.
- If the HSE clock is used as the RTC clock:
  - The RTC state is not guaranteed if the V_{DD} supply is powered off or if the internal voltage regulator is powered off (removing power from the 1.2 V domain).

Note: To read the RTC calendar register when the APB1 clock frequency is less than seven times the RTC clock frequency ($f_{APB1} < 7xf_{RTCLCK}$), the software must read the calendar time and date registers twice. The data are correct if the second read access to RTC_TR gives the same result than the first one. Otherwise a third read access must be performed.

7.2.9 Watchdog clock

If the independent watchdog (IWDG) is started by either hardware option or software access, the LSI oscillator is forced ON and cannot be disabled. After the LSI oscillator temporization, the clock is provided to the IWDG.

7.2.10 Clock-out capability

Two microcontroller clock output (MCO) pins are available:

- MCO1

  You can output four different clock sources onto the MCO1 pin (PA8) using the configurable prescaler (from 1 to 5):

  – HSI clock
  – LSE clock
  – HSE clock
  – PLL clock

  The desired clock source is selected using the MCO1PRE[2:0] and MCO1[1:0] bits in the *RCC clock configuration register (RCC_CFGR)*.

- MCO2

  You can output four different clock sources onto the MCO2 pin (PC9) using the configurable prescaler (from 1 to 5):

  – HSE clock
  – PLL clock
  – System clock (SYSCLK)
  – PLLI2S clock

  The desired clock source is selected using the MCO2PRE[2:0] and MCO2 bits in the *RCC clock configuration register (RCC_CFGR)*.

For the different MCO pins, the corresponding GPIO port has to be programmed in alternate function mode.

The selected clock to output onto MCO must not exceed 100 MHz (the maximum I/O speed).

7.2.11 Internal/external clock measurement using TIM5/TIM11

It is possible to indirectly measure the frequencies of all on-board clock source generators by means of the input capture of TIM5 channel4 and TIM11 channel1 as shown in *Figure 23* and *Figure 24*.

Internal/external clock measurement using TIM5 channel4

TIM5 has an input multiplexer which allows choosing whether the input capture is triggered by the I/O or by an internal clock. This selection is performed through the TI4_RMP [1:0] bits in the TIM5_OR register.

The primary purpose of having the LSE connected to the channel4 input capture is to be able to precisely measure the HSI (this requires to have the HSI used as the system clock source). The number of HSI clock counts between consecutive edges of the LSE signal provides a measurement of the internal clock period. Taking advantage of the high precision of LSE crystals (typically a few tens of ppm) we can determine the internal clock frequency with the same resolution, and trim the source to compensate for manufacturing-process and/or temperature- and voltage-related frequency deviations.

The HSI oscillator has dedicated, user-accessible calibration bits for this purpose.

The basic concept consists in providing a relative measurement (e.g. HSI/LSE ratio): the precision is therefore tightly linked to the ratio between the two clock sources. The greater the ratio, the better the measurement.

It is also possible to measure the LSI frequency: this is useful for applications that do not have a crystal. The ultralow-power LSI oscillator has a large manufacturing process deviation: by measuring it versus the HSI clock source, it is possible to determine its frequency with the precision of the HSI. The measured value can be used to have more accurate RTC time base timeouts (when LSI is used as the RTC clock source) and/or an IWDG timeout with an acceptable accuracy.

Use the following procedure to measure the LSI frequency:

1. Enable the TIM5 timer and configure channel4 in Input capture mode.
2. Set the TI4_RMP bits in the TIM5_OR register to 0x01 to connect the LSI clock internally to TIM5 channel4 input capture for calibration purposes.
3. Measure the LSI clock frequency using the TIM5 capture/compare 4 event or interrupt.
4. Use the measured LSI frequency to update the prescaler of the RTC depending on the desired time base and/or to compute the IWDG timeout.

Figure 23. Frequency measurement with TIM5 in Input capture mode

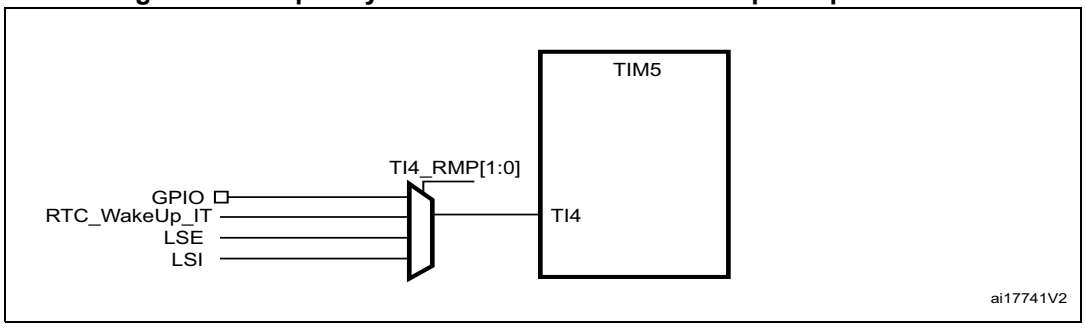

Internal/external clock measurement using TIM11 channel1

TIM11 has an input multiplexer which allows choosing whether the input capture is triggered by the I/O or by an internal clock. This selection is performed through TI1_RMP [1:0] bits in the TIM11_OR register. The HSE_RTC clock (HSE divided by a programmable prescaler) is connected to channel 1 input capture to have a rough indication of the external crystal frequency. This requires that the HSI is the system clock source. This can be useful for instance to ensure compliance with the IEC 60730/IEC 61335 standards which require to be able to determine harmonic or subharmonic frequencies (–50/+100% deviations).

Figure 24. Frequency measurement with TIM11 in Input capture mode

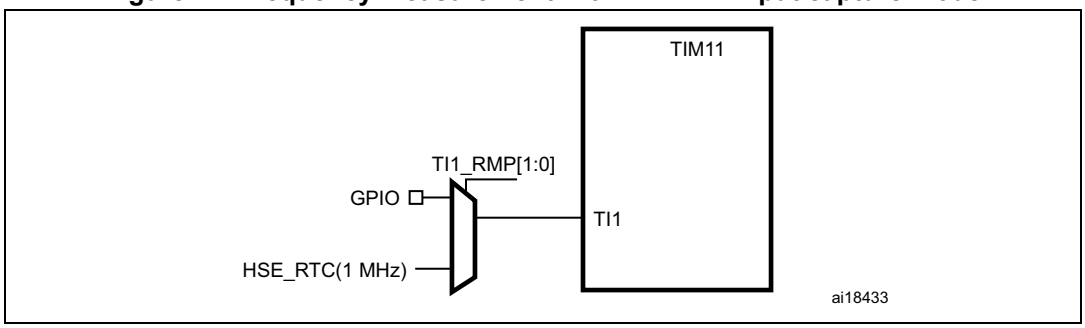

7.3 RCC registers

Refer to *Section 1.1: List of abbreviations for registers* for a list of abbreviations used in register descriptions.

7.3.1 RCC clock control register (RCC_CR)

Address offset: 0x00

Reset value: 0x0000 XX83 where X is undefined.

Access: no wait state, word, half-word and byte access

31	30	29	28	27	26	25	24	23	22	21	20	19	18	17	16
Reserved				PLLI2S RDY	PLLI2S ON	PLLRD Y	PLLON	Reserved				CSS ON	HSE BYP	HSE RDY	HSE ON
				r	rw	r	rw					rw	rw	r	rw

15	14	13	12	11	10	9	8	7	6	5	4	3	2	1	0
HSICAL[7:0]								HSITRIM[4:0]					Res.	HSI RDY	HSION
r	r	r	r	r	r	r	r	rw	rw	rw	rw	rw		r	rw

Bits 31:28 Reserved, must be kept at reset value.

Bit 27 **PLLI2SRDY**: PLLI2S clock ready flag
Set by hardware to indicate that the PLLI2S is locked.
0: PLLI2S unlocked
1: PLLI2S locked

Bit 26 **PLLI2SON**: PLLI2S enable
Set and cleared by software to enable PLLI2S.
Cleared by hardware when entering Stop or Standby mode.
0: PLLI2S OFF
1: PLLI2S ON

Bit 25 **PLLRDY**: Main PLL (PLL) clock ready flag
Set by hardware to indicate that PLL is locked.
0: PLL unlocked
1: PLL locked

Bit 24 **PLLON**: Main PLL (PLL) enable
Set and cleared by software to enable PLL.
Cleared by hardware when entering Stop or Standby mode. This bit cannot be reset if PLL clock is used as the system clock.
0: PLL OFF
1: PLL ON

Bits 23:20 Reserved, must be kept at reset value.

Bit 19 **CSSON**: Clock security system enable
Set and cleared by software to enable the clock security system. When CSSON is set, the clock detector is enabled by hardware when the HSE oscillator is ready, and disabled by hardware if an oscillator failure is detected.
0: Clock security system OFF (Clock detector OFF)
1: Clock security system ON (Clock detector ON if HSE oscillator is stable, OFF if not)

Bit 18 **HSEBYP**: HSE clock bypass

Set and cleared by software to bypass the oscillator with an external clock. The external clock must be enabled with the HSEON bit, to be used by the device.
The HSEBYP bit can be written only if the HSE oscillator is disabled.
0: HSE oscillator not bypassed
1: HSE oscillator bypassed with an external clock

Bit 17 **HSERDY**: HSE clock ready flag

Set by hardware to indicate that the HSE oscillator is stable. After the HSEON bit is cleared, HSERDY goes low after 6 HSE oscillator clock cycles.
0: HSE oscillator not ready
1: HSE oscillator ready

Bit 16 **HSEON**: HSE clock enable

Set and cleared by software.
Cleared by hardware to stop the HSE oscillator when entering Stop or Standby mode. This bit cannot be reset if the HSE oscillator is used directly or indirectly as the system clock.
0: HSE oscillator OFF
1: HSE oscillator ON

Bits 15:8 **HSICAL[7:0]**: Internal high-speed clock calibration

These bits are initialized automatically at startup.

Bits 7:3 **HSITRIM[4:0]**: Internal high-speed clock trimming

These bits provide an additional user-programmable trimming value that is added to the HSICAL[7:0] bits. It can be programmed to adjust to variations in voltage and temperature that influence the frequency of the internal HSI RC.

Bit 2 Reserved, must be kept at reset value.

Bit 1 **HSIRDY**: Internal high-speed clock ready flag

Set by hardware to indicate that the HSI oscillator is stable. After the HSION bit is cleared, HSIRDY goes low after 6 HSI clock cycles.
0: HSI oscillator not ready
1: HSI oscillator ready

Bit 0 **HSION**: Internal high-speed clock enable

Set and cleared by software.
Set by hardware to force the HSI oscillator ON when leaving the Stop or Standby mode or in case of a failure of the HSE oscillator used directly or indirectly as the system clock. This bit cannot be cleared if the HSI is used directly or indirectly as the system clock.
0: HSI oscillator OFF
1: HSI oscillator ON

7.3.2 RCC PLL configuration register (RCC_PLLCFGR)

Address offset: 0x04

Reset value: 0x2400 3010

Access: no wait state, word, half-word and byte access.

This register is used to configure the PLL clock outputs according to the formulas:

- $f_{(VCO\ clock)} = f_{(PLL\ clock\ input)} \times (PLLN / PLLM)$
- $f_{(PLL\ general\ clock\ output)} = f_{(VCO\ clock)} / PLLP$
- $f_{(USB\ OTG\ FS,\ SDIO,\ RNG\ clock\ output)} = f_{(VCO\ clock)} / PLLQ$

31	30	29	28	27	26	25	24	23	22	21	20	19	18	17	16
Reserved				PLLQ3	PLLQ2	PLLQ1	PLLQ0	Reserved	PLLSRC	Reserved				PLLP1	PLLP0
				rw	rw	rw	rw		rw					rw	rw

15	14	13	12	11	10	9	8	7	6	5	4	3	2	1	0
Reserved	PLLN									PLLM5	PLLM4	PLLM3	PLLM2	PLLM1	PLLM0
	rw	rw	rw	rw	rw	rw	rw	rw	rw	rw	rw	rw	rw	rw	rw

Bits 31:28 Reserved, must be kept at reset value.

Bits 27:24 **PLLQ:** Main PLL (PLL) division factor for USB OTG FS, SDIO and random number generator clocks

Set and cleared by software to control the frequency of USB OTG FS clock, the random number generator clock and the SDIO clock. These bits should be written only if PLL is disabled.

Caution: The USB OTG FS requires a 48 MHz clock to work correctly. The SDIO and the random number generator need a frequency lower than or equal to 48 MHz to work correctly.

USB OTG FS clock frequency = VCO frequency / PLLQ with 2 ≤PLLQ ≤15

0000: PLLQ = 0, wrong configuration

0001: PLLQ = 1, wrong configuration

0010: PLLQ = 2

0011: PLLQ = 3

0100: PLLQ = 4

...

1111: PLLQ = 15

Bit 23 Reserved, must be kept at reset value.

Bit 22 **PLLSRC:** Main PLL(PLL) and audio PLL (PLLI2S) entry clock source

Set and cleared by software to select PLL and PLLI2S clock source. This bit can be written only when PLL and PLLI2S are disabled.

0: HSI clock selected as PLL and PLLI2S clock entry

1: HSE oscillator clock selected as PLL and PLLI2S clock entry

Bits 21:18 Reserved, must be kept at reset value.

Bits 17:16 **PLLP:** Main PLL (PLL) division factor for main system clock

Set and cleared by software to control the frequency of the general PLL output clock. These bits can be written only if PLL is disabled.

Caution: The software has to set these bits correctly not to exceed 168 MHz on this domain.

PLL output clock frequency = VCO frequency / PLLP with PLLP = 2, 4, 6, or 8

00: PLLP = 2
01: PLLP = 4
10: PLLP = 6
11: PLLP = 8

Bits 14:6 **PLLN:** Main PLL (PLL) multiplication factor for VCO

Set and cleared by software to control the multiplication factor of the VCO. These bits can be written only when PLL is disabled. Only half-word and word accesses are allowed to write these bits.

Caution: The software has to set these bits correctly to ensure that the VCO output frequency is between 100 and 432 MHz.

VCO output frequency = VCO input frequency × PLLN with 50 ≤PLLN ≤432

000000000: PLLN = 0, wrong configuration
000000001: PLLN = 1, wrong configuration
...
000110010: PLLN = 50
...
001100011: PLLN = 99
001100100: PLLN = 100
...
110110000: PLLN = 432
110110001: PLLN = 433, wrong configuration
...
111111111: PLLN = 511, wrong configuration

Note: Multiplication factors ranging from 50 and 99 are possible for VCO input frequency higher than 1 MHz. However care must be taken that the minimum VCO output frequency respects the value specified above.

Bits 5:0 **PLLM:** Division factor for the main PLL (PLL) and audio PLL (PLLI2S) input clock

Set and cleared by software to divide the PLL and PLLI2S input clock before the VCO. These bits can be written only when the PLL and PLLI2S are disabled.

Caution: The software has to set these bits correctly to ensure that the VCO input frequency ranges from 1 to 2 MHz. It is recommended to select a frequency of 2 MHz to limit PLL jitter.

VCO input frequency = PLL input clock frequency / PLLM with 2 ≤PLLM ≤63

000000: PLLM = 0, wrong configuration
000001: PLLM = 1, wrong configuration
000010: PLLM = 2
000011: PLLM = 3
000100: PLLM = 4
...
111110: PLLM = 62
111111: PLLM = 63

7.3.3 RCC clock configuration register (RCC_CFGR)

Address offset: 0x08

Reset value: 0x0000 0000

Access: 0 ≤ wait state ≤ 2, word, half-word and byte access

1 or 2 wait states inserted only if the access occurs during a clock source switch.

31	30	29	28	27	26	25	24	23	22	21	20	19	18	17	16
MCO2		MCO2 PRE[2:0]			MCO1 PRE[2:0]			I2SSCR	MCO1		RTCPRE[4:0]				
rw		rw	rw	rw	rw	rw	rw	rw	rw		rw	rw	rw	rw	rw

15	14	13	12	11	10	9	8	7	6	5	4	3	2	1	0
PPRE2[2:0]			PPRE1[2:0]			Reserved		HPRE[3:0]				SWS1	SWS0	SW1	SW0
rw	rw	rw	rw	rw	rw			rw	rw	rw	rw	r	r	rw	rw

Bits 31:30 **MCO2[1:0]:** Microcontroller clock output 2

Set and cleared by software. Clock source selection may generate glitches on MCO2. It is highly recommended to configure these bits only after reset before enabling the external oscillators and the PLLs.

00: System clock (SYSCLK) selected
01: PLLI2S clock selected
10: HSE oscillator clock selected
11: PLL clock selected

Bits 27:29 **MCO2PRE:** MCO2 prescaler

Set and cleared by software to configure the prescaler of the MCO2. Modification of this prescaler may generate glitches on MCO2. It is highly recommended to change this prescaler only after reset before enabling the external oscillators and the PLLs.

0xx: no division
100: division by 2
101: division by 3
110: division by 4
111: division by 5

Bits 24:26 **MCO1PRE:** MCO1 prescaler

Set and cleared by software to configure the prescaler of the MCO1. Modification of this prescaler may generate glitches on MCO1. It is highly recommended to change this prescaler only after reset before enabling the external oscillators and the PLL.

0xx: no division
100: division by 2
101: division by 3
110: division by 4
111: division by 5

Bit 23 **I2SSRC**: I2S clock selection

Set and cleared by software. This bit allows to select the I2S clock source between the PLLI2S clock and the external clock. It is highly recommended to change this bit only after reset and before enabling the I2S module.

0: PLLI2S clock used as I2S clock source
1: External clock mapped on the I2S_CKIN pin used as I2S clock source

Bits 22:21 **MCO1:** Microcontroller clock output 1

Set and cleared by software. Clock source selection may generate glitches on MCO1. It is highly recommended to configure these bits only after reset before enabling the external oscillators and PLL.

00: HSI clock selected
01: LSE oscillator selected
10: HSE oscillator clock selected
11: PLL clock selected

Bits 20:16 **RTCPRE:** HSE division factor for RTC clock

Set and cleared by software to divide the HSE clock input clock to generate a 1 MHz clock for RTC.

Caution: The software has to set these bits correctly to ensure that the clock supplied to the RTC is 1 MHz. These bits must be configured if needed before selecting the RTC clock source.

00000: no clock
00001: no clock
00010: HSE/2
00011: HSE/3
00100: HSE/4
...
11110: HSE/30
11111: HSE/31

Bits 15:13 **PPRE2:** APB high-speed prescaler (APB2)

Set and cleared by software to control APB high-speed clock division factor.

Caution: The software has to set these bits correctly not to exceed 84 MHz on this domain. The clocks are divided with the new prescaler factor from 1 to 16 AHB cycles after PPRE2 write.

0xx: AHB clock not divided
100: AHB clock divided by 2
101: AHB clock divided by 4
110: AHB clock divided by 8
111: AHB clock divided by 16

Bits 12:10 **PPRE1:** APB Low speed prescaler (APB1)

Set and cleared by software to control APB low-speed clock division factor.

Caution: The software has to set these bits correctly not to exceed 42 MHz on this domain. The clocks are divided with the new prescaler factor from 1 to 16 AHB cycles after PPRE1 write.

0xx: AHB clock not divided
100: AHB clock divided by 2
101: AHB clock divided by 4
110: AHB clock divided by 8
111: AHB clock divided by 16

Bits 9:8 Reserved, must be kept at reset value.

Bits 7:4 **HPRE:** AHB prescaler

Set and cleared by software to control AHB clock division factor.

Caution: The clocks are divided with the new prescaler factor from 1 to 16 AHB cycles after HPRE write.

Caution: The AHB clock frequency must be at least 25 MHz when the Ethernet is used.

0xxx: system clock not divided
1000: system clock divided by 2
1001: system clock divided by 4
1010: system clock divided by 8
1011: system clock divided by 16
1100: system clock divided by 64
1101: system clock divided by 128
1110: system clock divided by 256
1111: system clock divided by 512

Bits 3:2 **SWS:** System clock switch status

Set and cleared by hardware to indicate which clock source is used as the system clock.
00: HSI oscillator used as the system clock
01: HSE oscillator used as the system clock
10: PLL used as the system clock
11: not applicable

Bits 1:0 **SW:** System clock switch

Set and cleared by software to select the system clock source.
Set by hardware to force the HSI selection when leaving the Stop or Standby mode or in case of failure of the HSE oscillator used directly or indirectly as the system clock.
00: HSI oscillator selected as system clock
01: HSE oscillator selected as system clock
10: PLL selected as system clock
11: not allowed

7.3.4 RCC clock interrupt register (RCC_CIR)

Address offset: 0x0C

Reset value: 0x0000 0000

Access: no wait state, word, half-word and byte access

31	30	29	28	27	26	25	24	23	22	21	20	19	18	17	16
Reserved								CSSC	Reserved	PLLI2S RDYC	PLL RDYC	HSE RDYC	HSI RDYC	LSE RDYC	LSI RDYC
								w		w	w	w	w	w	w

15	14	13	12	11	10	9	8	7	6	5	4	3	2	1	0
Reserved		PLLI2S RDYIE	PLL RDYIE	HSE RDYIE	HSI RDYIE	LSE RDYIE	LSI RDYIE	CSSF	Reserved	PLLI2S RDYF	PLL RDYF	HSE RDYF	HSI RDYF	LSE RDYF	LSI RDYF
		rw	rw	rw	rw	rw	rw	r		r	r	r	r	r	r

Bits 31:24 Reserved, must be kept at reset value.

Bit 23 **CSSC:** Clock security system interrupt clear
This bit is set by software to clear the CSSF flag.
0: No effect
1: Clear CSSF flag

Bits 22 Reserved, must be kept at reset value.

Bit 21 **PLLI2SRDYC:** PLLI2S ready interrupt clear
This bit is set by software to clear the PLLI2SRDYF flag.
0: No effect
1: PLLI2SRDYF cleared

Bit 20 **PLLRDYC:** Main PLL(PLL) ready interrupt clear
This bit is set by software to clear the PLLRDYF flag.
0: No effect
1: PLLRDYF cleared

Bit 19 **HSERDYC:** HSE ready interrupt clear
This bit is set by software to clear the HSERDYF flag.
0: No effect
1: HSERDYF cleared

Bit 18 **HSIRDYC:** HSI ready interrupt clear
This bit is set software to clear the HSIRDYF flag.
0: No effect
1: HSIRDYF cleared

Bit 17 **LSERDYC:** LSE ready interrupt clear
This bit is set by software to clear the LSERDYF flag.
0: No effect
1: LSERDYF cleared

Bit 16 **LSIRDYC:** LSI ready interrupt clear
This bit is set by software to clear the LSIRDYF flag.
0: No effect
1: LSIRDYF cleared

Bits 15:12 Reserved, must be kept at reset value.

Bit 13 **PLLI2SRDYIE:** PLLI2S ready interrupt enable
Set and cleared by software to enable/disable interrupt caused by PLLI2S lock.
0: PLLI2S lock interrupt disabled
1: PLLI2S lock interrupt enabled

Bit 12 **PLLRDYIE:** Main PLL (PLL) ready interrupt enable
Set and cleared by software to enable/disable interrupt caused by PLL lock.
0: PLL lock interrupt disabled
1: PLL lock interrupt enabled

Bit 11 **HSERDYIE:** HSE ready interrupt enable
Set and cleared by software to enable/disable interrupt caused by the HSE oscillator stabilization.
0: HSE ready interrupt disabled
1: HSE ready interrupt enabled

Bit 10 **HSIRDYIE:** HSI ready interrupt enable

Set and cleared by software to enable/disable interrupt caused by the HSI oscillator stabilization.
0: HSI ready interrupt disabled
1: HSI ready interrupt enabled

Bit 9 **LSERDYIE:** LSE ready interrupt enable

Set and cleared by software to enable/disable interrupt caused by the LSE oscillator stabilization.
0: LSE ready interrupt disabled
1: LSE ready interrupt enabled

Bit 8 **LSIRDYIE:** LSI ready interrupt enable

Set and cleared by software to enable/disable interrupt caused by LSI oscillator stabilization.
0: LSI ready interrupt disabled
1: LSI ready interrupt enabled

Bit 7 **CSSF:** Clock security system interrupt flag

Set by hardware when a failure is detected in the HSE oscillator.
Cleared by software setting the CSSC bit.
0: No clock security interrupt caused by HSE clock failure
1: Clock security interrupt caused by HSE clock failure

Bits 6 Reserved, must be kept at reset value.

Bit 5 **PLLI2SRDYF:** PLLI2S ready interrupt flag

Set by hardware when the PLLI2S locks and PLLI2SRDYDIE is set.
Cleared by software setting the PLLRI2SDYC bit.
0: No clock ready interrupt caused by PLLI2S lock
1: Clock ready interrupt caused by PLLI2S lock

Bit 4 **PLLRDYF:** Main PLL (PLL) ready interrupt flag

Set by hardware when PLL locks and PLLRDYDIE is set.
Cleared by software setting the PLLRDYC bit.
0: No clock ready interrupt caused by PLL lock
1: Clock ready interrupt caused by PLL lock

Bit 3 **HSERDYF:** HSE ready interrupt flag

Set by hardware when External High Speed clock becomes stable and HSERDYDIE is set.
Cleared by software setting the HSERDYC bit.
0: No clock ready interrupt caused by the HSE oscillator
1: Clock ready interrupt caused by the HSE oscillator

Bit 2 **HSIRDYF:** HSI ready interrupt flag

Set by hardware when the Internal High Speed clock becomes stable and HSIRDYDIE is set.

Cleared by software setting the HSIRDYC bit.

0: No clock ready interrupt caused by the HSI oscillator

1: Clock ready interrupt caused by the HSI oscillator

Bit 1 **LSERDYF:** LSE ready interrupt flag

Set by hardware when the External Low Speed clock becomes stable and LSERDYDIE is set.

Cleared by software setting the LSERDYC bit.

0: No clock ready interrupt caused by the LSE oscillator

1: Clock ready interrupt caused by the LSE oscillator

Bit 0 **LSIRDYF:** LSI ready interrupt flag

Set by hardware when the internal low speed clock becomes stable and LSIRDYDIE is set.

Cleared by software setting the LSIRDYC bit.

0: No clock ready interrupt caused by the LSI oscillator

1: Clock ready interrupt caused by the LSI oscillator

7.3.5 RCC AHB1 peripheral reset register (RCC_AHB1RSTR)

Address offset: 0x10

Reset value: 0x0000 0000

Access: no wait state, word, half-word and byte access.

31	30	29	28	27	26	25	24	23	22	21	20	19	18	17	16
Reserved		OTGHS RST	Reserved			ETHMAC RST	Reserved		DMA2 RST	DMA1 RST	Reserved				
		rw				rw			rw	rw					

15	14	13	12	11	10	9	8	7	6	5	4	3	2	1	0
Reserved			CRCRST	Reserved			GPIOIRST	GPIOHRST	GPIOGGRST	GPIOFRST	GPIOERST	GPIODRST	GPIOCRST	GPIOBRST	GPIOARST
			rw				rw	rw	rw	rw	rw	rw	rw	rw	rw

Bits 31:30 Reserved, must be kept at reset value.

Bit 29 **OTGHSRST:** USB OTG HS module reset

Set and cleared by software.

0: does not reset the USB OTG HS module

1: resets the USB OTG HS module

Bits 28:26 Reserved, must be kept at reset value.

Bit 25 **ETHMACRST:** Ethernet MAC reset

Set and cleared by software.

0: does not reset Ethernet MAC

1: resets Ethernet MAC

Bits 24:23 Reserved, must be kept at reset value.

Bit 22 **DMA2RST:** DMA2 reset
Set and cleared by software.
0: does not reset DMA2
1: resets DMA2

Bit 21 **DMA1RST:** DMA1 reset
Set and cleared by software.
0: does not reset DMA1
1: resets DMA1

Bits 20:13 Reserved, must be kept at reset value.

Bit 12 **CRCRST:** CRC reset
Set and cleared by software.
0: does not reset CRC
1: resets CRC

Bits 11:9 Reserved, must be kept at reset value.

Bit 8 **GPIOIRST:** IO port I reset
Set and cleared by software.
0: does not reset IO port I
1: resets IO port I

Bit 7 **GPIOHRST:** IO port H reset
Set and cleared by software.
0: does not reset IO port H
1: resets IO port H

Bits 6 **GPIOGRST:** IO port G reset
Set and cleared by software.
0: does not reset IO port G
1: resets IO port G

Bit 5 **GPIOFRST:** IO port F reset
Set and cleared by software.
0: does not reset IO port F
1: resets IO port F

Bit 4 **GPIOERST:** IO port E reset
Set and cleared by software.
0: does not reset IO port E
1: resets IO port E

Bit 3 **GPIODRST:** IO port D reset
Set and cleared by software.
0: does not reset IO port D
1: resets IO port D

Bit 2 **GPIOCRST:** IO port C reset

Set and cleared by software.
0: does not reset IO port C
1: resets IO port C

Bit 1 **GPIOBRST:** IO port B reset

Set and cleared by software.
0: does not reset IO port B
1:resets IO port B

Bit 0 **GPIOARST:** IO port A reset

Set and cleared by software.
0: does not reset IO port A
1: resets IO port A

7.3.6 RCC AHB2 peripheral reset register (RCC_AHB2RSTR)

Address offset: 0x14

Reset value: 0x0000 0000

Access: no wait state, word, half-word and byte access

31	30	29	28	27	26	25	24	23	22	21	20	19	18	17	16
Reserved															
15	14	13	12	11	10	9	8	7	6	5	4	3	2	1	0
Reserved								OTGFS RST	RNG RST	HASH RST	CRYP RST	Reserved			DCMI RST
								rw	rw	rw	rw				rw

Bits 31:8 Reserved, must be kept at reset value.

Bit 7 **OTGFSRST:** USB OTG FS module reset
Set and cleared by software.
0: does not reset the USB OTG FS module
1: resets the USB OTG FS module

Bit 6 **RNGRST:** Random number generator module reset
Set and cleared by software.
0: does not reset the random number generator module
1: resets the random number generator module

Bit 5 **HASHRST:** Hash module reset
Set and cleared by software.
0: does not reset the HASH module
1: resets the HASH module

Bit 4 **CRYPRST:** Cryptographic module reset
Set and cleared by software.
0: does not reset the cryptographic module
1: resets the cryptographic module

Bits 3:1 Reserved, must be kept at reset value.

Bit 0 **DCMIRST:** Camera interface reset
Set and cleared by software.
0: does not reset the Camera interface
1: resets the Camera interface

7.3.7 RCC AHB3 peripheral reset register (RCC_AHB3RSTR)

Address offset: 0x18

Reset value: 0x0000 0000

Access: no wait state, word, half-word and byte access.

31	30	29	28	27	26	25	24	23	22	21	20	19	18	17	16
Reserved															
15	14	13	12	11	10	9	8	7	6	5	4	3	2	1	0
Reserved															FSMCRST
															rw

Bits 31:1 Reserved, must be kept at reset value.

Bit 0 **FSMCRST:** Flexible static memory controller module reset
Set and cleared by software.
0: does not reset the FSMC module
1: resets the FSMC module

7.3.8 RCC APB1 peripheral reset register (RCC_APB1RSTR)

Address offset: 0x20

Reset value: 0x0000 0000

Access: no wait state, word, half-word and byte access.

31	30	29	28	27	26	25	24	23	22	21	20	19	18	17	16
Reserved		DACRST	PWR RST	Reser-ved	CAN2 RST	CAN1 RST	Reser-ved	I2C3 RST	I2C2 RST	I2C1 RST	UART5 RST	UART4 RST	UART3 RST	UART2 RST	Reser-ved
		rw	rw			rw		rw	rw	rw	rw	rw	rw	rw	
15	14	13	12	11	10	9	8	7	6	5	4	3	2	1	0
SPI3 RST	SPI2 RST	Reserved		WWDG RST	Reserved		TIM14 RST	TIM13 RST	TIM12 RST	TIM7 RST	TIM6 RST	TIM5 RST	TIM4 RST	TIM3 RST	TIM2 RST
rw	rw			rw			rw	rw	rw	rw	rw	rw	rw	rw	rw

Bits 31:30 Reserved, must be kept at reset value.

Bit 29 **DACRST:** DAC reset
Set and cleared by software.
0: does not reset the DAC interface
1: resets the DAC interface

Bit 28 **PWRRST:** Power interface reset
Set and cleared by software.
0: does not reset the power interface
1: resets the power interface

Bit 27 Reserved, must be kept at reset value.

Bit 26 **CAN2RST:** CAN2 reset
Set and cleared by software.
0: does not reset CAN2
1: resets CAN2

Bit 25 **CAN1RST:** CAN1 reset
Set and cleared by software.
0: does not reset CAN1
1: resets CAN1

Bit 24 Reserved, must be kept at reset value.

Bit 23 **I2C3RST:** I2C3 reset
Set and cleared by software.
0: does not reset I2C3
1: resets I2C3

Bit 22 **I2C2RST:** I2C2 reset
Set and cleared by software.
0: does not reset I2C2
1: resets I2C2

Bit 21 **I2C1RST:** I2C1 reset
Set and cleared by software.
0: does not reset I2C1
1: resets I2C1

Bit 20 **UART5RST:** UART5 reset
Set and cleared by software.
0: does not reset UART5
1: resets UART5

Bit 19 **UART4RST:** USART4 reset
Set and cleared by software.
0: does not reset UART4
1: resets UART4

Bit 18 **USART3RST:** USART3 reset
Set and cleared by software.
0: does not reset USART3
1: resets USART3

Bit 17 **USART2RST:** USART2 reset
Set and cleared by software.
0: does not reset USART2
1: resets USART2

Bit 16 Reserved, must be kept at reset value.

Bit 15 **SPI3RST:** SPI3 reset
Set and cleared by software.
0: does not reset SPI3
1: resets SPI3

Bit 14 **SPI2RST:** SPI2 reset
Set and cleared by software.
0: does not reset SPI2
1: resets SPI2

Bits 13:12 Reserved, must be kept at reset value.

Bit 11 **WWDGRST:** Window watchdog reset
Set and cleared by software.
0: does not reset the window watchdog
1: resets the window watchdog

Bits 10:9 Reserved, must be kept at reset value.

Bit 8 **TIM14RST:** TIM14 reset
Set and cleared by software.
0: does not reset TIM14
1: resets TIM14

Bit 7 **TIM13RST:** TIM13 reset
Set and cleared by software.
0: does not reset TIM13
1: resets TIM13

Bit 6 **TIM12RST:** TIM12 reset
Set and cleared by software.
0: does not reset TIM12
1: resets TIM12

Bit 5 **TIM7RST:** TIM7 reset
Set and cleared by software.
0: does not reset TIM7
1: resets TIM7

Bit 4 **TIM6RST:** TIM6 reset
Set and cleared by software.
0: does not reset TIM6
1: resets TIM6

Bit 3 **TIM5RST:** TIM5 reset
Set and cleared by software.
0: does not reset TIM5
1: resets TIM5

Bit 2 **TIM4RST:** TIM4 reset
Set and cleared by software.
0: does not reset TIM4
1: resets TIM4

Bit 1 **TIM3RST:** TIM3 reset
Set and cleared by software.
0: does not reset TIM3
1: resets TIM3

Bit 0 **TIM2RST:** TIM2 reset
Set and cleared by software.
0: does not reset TIM2
1: resets TIM2

7.3.9 RCC APB2 peripheral reset register (RCC_APB2RSTR)

Address offset: 0x24

Reset value: 0x0000 0000

Access: no wait state, word, half-word and byte access.

31	30	29	28	27	26	25	24	23	22	21	20	19	18	17	16
Reserved													TIM11 RST	TIM10 RST	TIM9 RST
													rw	rw	rw

15	14	13	12	11	10	9	8	7	6	5	4	3	2	1	0
Reser-ved	SYSCFG RST	Reser-ved	SPI1 RST	SDIO RST	Reserved		ADC RST	Reserved		USART 6 RST	USART 1 RST	Reserved		TIM8 RST	TIM1 RST
	rw		rw	rw			rw			rw	rw			rw	rw

Bits 31:19 Reserved, must be kept at reset value.

Bit 18 **TIM11RST:** TIM11 reset
Set and cleared by software.
0: does not reset TIM11
1: resets TIM14

Bit 17 **TIM10RST:** TIM10 reset
Set and cleared by software.
0: does not reset TIM10
1: resets TIM10

Bit 16 **TIM9RST:** TIM9 reset
Set and cleared by software.
0: does not reset TIM9
1: resets TIM9

Bit 15 Reserved, must be kept at reset value.

Bit 14 **SYSCFGRST:** System configuration controller reset
Set and cleared by software.
0: does not reset the System configuration controller
1: resets the System configuration controller

Bit 13 Reserved, must be kept at reset value.

Bit 12 **SPI1RST:** SPI1 reset
Set and cleared by software.
0: does not reset SPI1
1: resets SPI1

Bit 11 **SDIORST:** SDIO reset
Set and cleared by software.
0: does not reset the SDIO module
1: resets the SDIO module

Bits 10:9 Reserved, must be kept at reset value.

Bit 8 **ADCRST:** ADC interface reset (common to all ADCs)
Set and cleared by software.
0: does not reset the ADC interface
1: resets the ADC interface

Bits 7:6 Reserved, must be kept at reset value.

Bit 5 **USART6RST:** USART6 reset
Set and cleared by software.
0: does not reset USART6
1: resets USART6

Bit 4 **USART1RST:** USART1 reset
Set and cleared by software.
0: does not reset USART1
1: resets USART1

Bits 3:2 Reserved, must be kept at reset value.

Bit 1 **TIM8RST:** TIM8 reset
Set and cleared by software.
0: does not reset TIM8
1: resets TIM8

Bit 0 **TIM1RST:** TIM1 reset
Set and cleared by software.
0: does not reset TIM1
1: resets TIM1

7.3.10 RCC AHB1 peripheral clock enable register (RCC_AHB1ENR)

Address offset: 0x30

Reset value: 0x0010 0000

Access: no wait state, word, half-word and byte access.

31	30	29	28	27	26	25	24	23	22	21	20	19	18	17	16
Reser-ved	OTGHS ULPIEN	OTGHSEN	ETHMACPTPEN	ETHMACRXEN	ETHMACTXEN	ETHMACEN	Reserved		DMA2EN	DMA1EN	CCMDATARAMEN	Res.	BKPSRAMEN	Reserved	
	rw	rw	rw	rw	rw	rw			rw	rw			rw		

15	14	13	12	11	10	9	8	7	6	5	4	3	2	1	0
Reserved			CRCEN	Reserved			GPIOIEN	GPIOHEN	GPIOGEN	GPIOFEN	GPIOEEN	GPIODEN	GPIOCEN	GPIOBEN	GPIOAEN
			rw				rw	rw	rw	rw	rw	rw	rw	rw	rw

Bit 31 Reserved, must be kept at reset value.

Bit 30 **OTGHSULPIEN:** USB OTG HSULPI clock enable
Set and cleared by software. This bit must be cleared when the OTG_HS is used in FS mode.
0: USB OTG HS ULPI clock disabled
1: USB OTG HS ULPI clock enabled

Bit 29 **OTGHSEN:** USB OTG HS clock enable
Set and cleared by software.
0: USB OTG HS clock disabled
1: USB OTG HS clock enabled

Bit 28 **ETHMACPTPEN:** Ethernet PTP clock enable
Set and cleared by software.
0: Ethernet PTP clock disabled
1: Ethernet PTP clock enabled

Bit 27 **ETHMACRXEN:** Ethernet Reception clock enable
Set and cleared by software.
0: Ethernet Reception clock disabled
1: Ethernet Reception clock enabled

Bit 26 **ETHMACTXEN:** Ethernet Transmission clock enable
Set and cleared by software.
0: Ethernet Transmission clock disabled
1: Ethernet Transmission clock enabled

Bit 25 **ETHMACEN:** Ethernet MAC clock enable
Set and cleared by software.
0: Ethernet MAC clock disabled
1: Ethernet MAC clock enabled

Bits 24:23 Reserved, must be kept at reset value.

Bit 22 **DMA2EN:** DMA2 clock enable
Set and cleared by software.
0: DMA2 clock disabled
1: DMA2 clock enabled

Bit 21 **DMA1EN:** DMA1 clock enable
Set and cleared by software.
0: DMA1 clock disabled
1: DMA1 clock enabled

Bit 20 **CCMDATARAMEN**: CCM data RAM clock enable
Set and cleared by software.
0: CCM data RAM clock disabled
1: CCM data RAM clock enabled

Bit 19 Reserved, must be kept at reset value.

Bit 18 **BKPSRAMEN:** Backup SRAM interface clock enable
Set and cleared by software.
0: Backup SRAM interface clock disabled
1: Backup SRAM interface clock enabled

Bits 17:13 Reserved, must be kept at reset value.

Bit 12 **CRCEN:** CRC clock enable
Set and cleared by software.
0: CRC clock disabled
1: CRC clock enabled

Bits 11:9 Reserved, must be kept at reset value.

Bit 8 **GPIOIEN:** IO port I clock enable
Set and cleared by software.
0: IO port I clock disabled
1: IO port I clock enabled

Bit 7 **GPIOHEN:** IO port H clock enable
Set and cleared by software.
0: IO port H clock disabled
1: IO port H clock enabled

Bit 6 **GPIOGEN:** IO port G clock enable
Set and cleared by software.
0: IO port G clock disabled
1: IO port G clock enabled

Bit 5 **GPIOFEN:** IO port F clock enable
Set and cleared by software.
0: IO port F clock disabled
1: IO port F clock enabled

Bit 4 **GPIOEEN:** IO port E clock enable
Set and cleared by software.
0: IO port E clock disabled
1: IO port E clock enabled

Bit 3 **GPIODEN:** IO port D clock enable
Set and cleared by software.
0: IO port D clock disabled
1: IO port D clock enabled

Bit 2 **GPIOCEN:** IO port C clock enable
Set and cleared by software.
0: IO port C clock disabled
1: IO port C clock enabled

Bit 1 **GPIOBEN:** IO port B clock enable
Set and cleared by software.
0: IO port B clock disabled
1: IO port B clock enabled

Bit 0 **GPIOAEN:** IO port A clock enable
Set and cleared by software.
0: IO port A clock disabled
1: IO port A clock enabled

7.3.11 RCC AHB2 peripheral clock enable register (RCC_AHB2ENR)

Address offset: 0x34

Reset value: 0x0000 0000

Access: no wait state, word, half-word and byte access.

31	30	29	28	27	26	25	24	23	22	21	20	19	18	17	16
Reserved															
15	14	13	12	11	10	9	8	7	6	5	4	3	2	1	0
Reserved								OTGFS EN	RNG EN	HASH EN	CRYP EN	Reserved			DCMI EN
								rw	rw	rw	rw				rw

Bits 31:8 Reserved, must be kept at reset value.

Bit 7 **OTGFSEN:** USB OTG FS clock enable
Set and cleared by software.
0: USB OTG FS clock disabled
1: USB OTG FS clock enabled

Bit 6 **RNGEN:** Random number generator clock enable
Set and cleared by software.
0: Random number generator clock disabled
1: Random number generator clock enabled

Bit 5 **HASHEN:** Hash modules clock enable
Set and cleared by software.
0: Hash modules clock disabled
1: Hash modules clock enabled

Bit 4 **CRYPEN:** Cryptographic modules clock enable
Set and cleared by software.
0: cryptographic module clock disabled
1: cryptographic module clock enabled

Bits 3:1 Reserved, must be kept at reset value.

Bit 0 **DCMIEN:** Camera interface enable
Set and cleared by software.
0: Camera interface clock disabled
1: Camera interface clock enabled

7.3.12 RCC AHB3 peripheral clock enable register (RCC_AHB3ENR)

Address offset: 0x38

Reset value: 0x0000 0000

Access: no wait state, word, half-word and byte access.

31	30	29	28	27	26	25	24	23	22	21	20	19	18	17	16
Reserved															
15	14	13	12	11	10	9	8	7	6	5	4	3	2	1	0
Reserved															FSMCEN
															rw

Bits 31:1 Reserved, must be kept at reset value.

Bit 0 **FSMCEN:** Flexible static memory controller module clock enable
Set and cleared by software.
0: FSMC module clock disabled
1: FSMC module clock enabled

7.3.13 RCC APB1 peripheral clock enable register (RCC_APB1ENR)

Address offset: 0x40

Reset value: 0x0000 0000

Access: no wait state, word, half-word and byte access.

31	30	29	28	27	26	25	24	23	22	21	20	19	18	17	16
Reserved		DAC EN	PWR EN	Reser-ved	CAN2 EN	CAN1 EN	Reser-ved	I2C3 EN	I2C2 EN	I2C1 EN	UART5 EN	UART4 EN	USART 3 EN	USART 2 EN	Reser-ved
		rw	rw		rw	rw		rw	rw	rw	rw	rw	rw	rw	
15	14	13	12	11	10	9	8	7	6	5	4	3	2	1	0
SPI3 EN	SPI2 EN	Reserved		WWDG EN	Reserved		TIM14 EN	TIM13 EN	TIM12 EN	TIM7 EN	TIM6 EN	TIM5 EN	TIM4 EN	TIM3 EN	TIM2 EN
rw	rw			rw			rw	rw	rw	rw	rw	rw	rw	rw	rw

Bits 31:30 Reserved, must be kept at reset value.

Bit 29 **DACEN:** DAC interface clock enable
Set and cleared by software.
0: DAC interface clock disabled
1: DAC interface clock enable

Bit 28 **PWREN:** Power interface clock enable
Set and cleared by software.
0: Power interface clock disabled
1: Power interface clock enable

Bit 27 Reserved, must be kept at reset value.

Bit 26 **CAN2EN:** CAN 2 clock enable
Set and cleared by software.
0: CAN 2 clock disabled
1: CAN 2 clock enabled

Bit 25 **CAN1EN:** CAN 1 clock enable
Set and cleared by software.
0: CAN 1 clock disabled
1: CAN 1 clock enabled

Bit 24 Reserved, must be kept at reset value.

Bit 23 **I2C3EN:** I2C3 clock enable
Set and cleared by software.
0: I2C3 clock disabled
1: I2C3 clock enabled

Bit 22 **I2C2EN:** I2C2 clock enable
Set and cleared by software.
0: I2C2 clock disabled
1: I2C2 clock enabled

Bit 21 **I2C1EN:** I2C1 clock enable
Set and cleared by software.
0: I2C1 clock disabled
1: I2C1 clock enabled

Bit 20 **UART5EN:** UART5 clock enable
Set and cleared by software.
0: UART5 clock disabled
1: UART5 clock enabled

Bit 19 **UART4EN:** UART4 clock enable
Set and cleared by software.
0: UART4 clock disabled
1: UART4 clock enabled

Bit 18 **USART3EN:** USART3 clock enable
Set and cleared by software.
0: USART3 clock disabled
1: USART3 clock enabled

Bit 17 **USART2EN:** USART2 clock enable
Set and cleared by software.
0: USART2 clock disabled
1: USART2 clock enabled

Bit 16 Reserved, must be kept at reset value.

Bit 15 **SPI3EN:** SPI3 clock enable
Set and cleared by software.
0: SPI3 clock disabled
1: SPI3 clock enabled

Bit 14 **SPI2EN:** SPI2 clock enable
Set and cleared by software.
0: SPI2 clock disabled
1: SPI2 clock enabled

Bits 13:12 Reserved, must be kept at reset value.

Bit 11 **WWDGEN:** Window watchdog clock enable
Set and cleared by software.
0: Window watchdog clock disabled
1: Window watchdog clock enabled

Bits 10:9 Reserved, must be kept at reset value.

Bit 8 **TIM14EN:** TIM14 clock enable
Set and cleared by software.
0: TIM14 clock disabled
1: TIM14 clock enabled

Bit 7 **TIM13EN:** TIM13 clock enable
Set and cleared by software.
0: TIM13 clock disabled
1: TIM13 clock enabled

Bit 6 **TIM12EN:** TIM12 clock enable
Set and cleared by software.
0: TIM12 clock disabled
1: TIM12 clock enabled

Bit 5 **TIM7EN:** TIM7 clock enable
Set and cleared by software.
0: TIM7 clock disabled
1: TIM7 clock enabled

Bit 4 **TIM6EN:** TIM6 clock enable
Set and cleared by software.
0: TIM6 clock disabled
1: TIM6 clock enabled

Bit 3 **TIM5EN:** TIM5 clock enable
Set and cleared by software.
0: TIM5 clock disabled
1: TIM5 clock enabled

Bit 2 **TIM4EN:** TIM4 clock enable
Set and cleared by software.
0: TIM4 clock disabled
1: TIM4 clock enabled

Bit 1 **TIM3EN:** TIM3 clock enable
Set and cleared by software.
0: TIM3 clock disabled
1: TIM3 clock enabled

Bit 0 **TIM2EN:** TIM2 clock enable
Set and cleared by software.
0: TIM2 clock disabled
1: TIM2 clock enabled

7.3.14 RCC APB2 peripheral clock enable register (RCC_APB2ENR)

Address offset: 0x44

Reset value: 0x0000 0000

Access: no wait state, word, half-word and byte access.

31	30	29	28	27	26	25	24	23	22	21	20	19	18	17	16
Reserved													TIM11 EN	TIM10 EN	TIM9 EN
													rw	rw	rw

15	14	13	12	11	10	9	8	7	6	5	4	3	2	1	0
Reser-ved	SYSCFG EN	Reser-ved	SPI1 EN	SDIO EN	ADC3 EN	ADC2 EN	ADC1 EN	Reserved		USART 6 EN	USART 1 EN	Reserved		TIM8 EN	TIM1 EN
	rw		rw	rw	rw	rw	rw			rw	rw			rw	rw

Bits 31:19 Reserved, must be kept at reset value.

Bit 18 **TIM11EN:** TIM11 clock enable
Set and cleared by software.
0: TIM11 clock disabled
1: TIM11 clock enabled

Bit 17 **TIM10EN:** TIM10 clock enable
Set and cleared by software.
0: TIM10 clock disabled
1: TIM10 clock enabled

Bit 16 **TIM9EN:** TIM9 clock enable
Set and cleared by software.
0: TIM9 clock disabled
1: TIM9 clock enabled

Bit 15 Reserved, must be kept at reset value.

Bit 14 **SYSCFGEN:** System configuration controller clock enable
Set and cleared by software.
0: System configuration controller clock disabled
1: System configuration controller clock enabled

Bit 13 Reserved, must be kept at reset value.

Bit 12 **SPI1EN:** SPI1 clock enable
Set and cleared by software.
0: SPI1 clock disabled
1: SPI1 clock enabled

Bit 11 **SDIOEN:** SDIO clock enable
Set and cleared by software.
0: SDIO module clock disabled
1: SDIO module clock enabled

Bit 10 **ADC3EN:** ADC3 clock enable
Set and cleared by software.
0: ADC3 clock disabled
1: ADC3 clock disabled

Bit 9 **ADC2EN:** ADC2 clock enable
Set and cleared by software.
0: ADC2 clock disabled
1: ADC2 clock disabled

Bit 8 **ADC1EN:** ADC1 clock enable
Set and cleared by software.
0: ADC1 clock disabled
1: ADC1 clock disabled

Bits 7:6 Reserved, must be kept at reset value.

Bit 5 **USART6EN:** USART6 clock enable
Set and cleared by software.
0: USART6 clock disabled
1: USART6 clock enabled

Bit 4 **USART1EN:** USART1 clock enable
Set and cleared by software.
0: USART1 clock disabled
1: USART1 clock enabled

Bits 3:2 Reserved, must be kept at reset value.

Bit 1 **TIM8EN:** TIM8 clock enable
Set and cleared by software.
0: TIM8 clock disabled
1: TIM8 clock enabled

Bit 0 **TIM1EN:** TIM1 clock enable
Set and cleared by software.
0: TIM1 clock disabled
1: TIM1 clock enabled

7.3.15 RCC AHB1 peripheral clock enable in low power mode register (RCC_AHB1LPENR)

Address offset: 0x50

Reset value: 0x7E67 91FF

Access: no wait state, word, half-word and byte access.

31	30	29	28	27	26	25	24	23	22	21	20	19	18	17	16
Reser-ved	OTGHSULPILPEN	OTGHSLPEN	ETHPTPLPEN	ETHRXLPEN	ETHTXLPEN	ETHMACLPEN	Reserved		DMA2LPEN	DMA1LPEN	Reserved		BKPSRAMLPEN	SRAM2LPEN	SRAM1LPEN
	rw	rw	rw	rw	rw	rw			rw	rw			rw	rw	rw

15	14	13	12	11	10	9	8	7	6	5	4	3	2	1	0
FLITFLPEN	Reserved		CRCLPEN	Reserved			GPIOILPEN	GPIOHLPEN	GPIOGGLPEN	GPIOFLPEN	GPIOELPEN	GPIODLPEN	GPIOCLPEN	GPIOBLPEN	GPIOALPEN
rw			rw				rw	rw	rw	rw	rw	rw	rw	rw	rw

Bit 31 Reserved, must be kept at reset value.

Bit 30 **OTGHSULPILPEN:** USB OTG HS ULPI clock enable during Sleep mode

Set and cleared by software. This bit must be cleared when the OTG_HS is used in FS mode.

0: USB OTG HS ULPI clock disabled during Sleep mode

1: USB OTG HS ULPI clock enabled during Sleep mode

Bit 29 **OTGHSLPEN:** USB OTG HS clock enable during Sleep mode

Set and cleared by software.

0: USB OTG HS clock disabled during Sleep mode

1: USB OTG HS clock enabled during Sleep mode

Bit 28 **ETHMACPTPLPEN:** Ethernet PTP clock enable during Sleep mode

Set and cleared by software.

0: Ethernet PTP clock disabled during Sleep mode

1: Ethernet PTP clock enabled during Sleep mode

Bit 27 **ETHMACRXLPEN:** Ethernet reception clock enable during Sleep mode

Set and cleared by software.

0: Ethernet reception clock disabled during Sleep mode

1: Ethernet reception clock enabled during Sleep mode

Bit 26 **ETHMACTXLPEN:** Ethernet transmission clock enable during Sleep mode

Set and cleared by software.

0: Ethernet transmission clock disabled during sleep mode

1: Ethernet transmission clock enabled during sleep mode

Bit 25 **ETHMACLPEN:** Ethernet MAC clock enable during Sleep mode

Set and cleared by software.

0: Ethernet MAC clock disabled during Sleep mode

1: Ethernet MAC clock enabled during Sleep mode

Bits 24:23 Reserved, must be kept at reset value.

Bit 22 **DMA2LPEN:** DMA2 clock enable during Sleep mode
Set and cleared by software.
0: DMA2 clock disabled during Sleep mode
1: DMA2 clock enabled during Sleep mode

Bit 21 **DMA1LPEN:** DMA1 clock enable during Sleep mode
Set and cleared by software.
0: DMA1 clock disabled during Sleep mode
1: DMA1 clock enabled during Sleep mode

Bits 20:19 Reserved, must be kept at reset value.

Bit 18 **BKPSRAMLPEN:** Backup SRAM interface clock enable during Sleep mode
Set and cleared by software.
0: Backup SRAM interface clock disabled during Sleep mode
1: Backup SRAM interface clock enabled during Sleep mode

Bit 17 **SRAM2LPEN:** SRAM 2 interface clock enable during Sleep mode
Set and cleared by software.
0: SRAM 2 interface clock disabled during Sleep mode
1: SRAM 2 interface clock enabled during Sleep mode

Bit 16 **SRAM1LPEN:** SRAM 1interface clock enable during Sleep mode
Set and cleared by software.
0: SRAM 1 interface clock disabled during Sleep mode
1: SRAM 1 interface clock enabled during Sleep mode

Bit 15 **FLITFLPEN:** Flash interface clock enable during Sleep mode
Set and cleared by software.
0: Flash interface clock disabled during Sleep mode
1: Flash interface clock enabled during Sleep mode

Bits 14:13 Reserved, must be kept at reset value.

Bit 12 **CRCLPEN:** CRC clock enable during Sleep mode
Set and cleared by software.
0: CRC clock disabled during Sleep mode
1: CRC clock enabled during Sleep mode

Bits 11:9 Reserved, must be kept at reset value.

Bit 8 **GPIOILPEN:** IO port I clock enable during Sleep mode
Set and cleared by software.
0: IO port I clock disabled during Sleep mode
1: IO port I clock enabled during Sleep mode

Bit 7 **GPIOHLPEN:** IO port H clock enable during Sleep mode
Set and cleared by software.
0: IO port H clock disabled during Sleep mode
1: IO port H clock enabled during Sleep mode

Bits 6 **GPIOGLPEN:** IO port G clock enable during Sleep mode
Set and cleared by software.
0: IO port G clock disabled during Sleep mode
1: IO port G clock enabled during Sleep mode

Bit 5 **GPIOFLPEN:** IO port F clock enable during Sleep mode
Set and cleared by software.
0: IO port F clock disabled during Sleep mode
1: IO port F clock enabled during Sleep mode

Bit 4 **GPIOELPEN:** IO port E clock enable during Sleep mode
Set and cleared by software.
0: IO port E clock disabled during Sleep mode
1: IO port E clock enabled during Sleep mode

Bit 3 **GPIODLPEN:** IO port D clock enable during Sleep mode
Set and cleared by software.
0: IO port D clock disabled during Sleep mode
1: IO port D clock enabled during Sleep mode

Bit 2 **GPIOCLPEN:** IO port C clock enable during Sleep mode
Set and cleared by software.
0: IO port C clock disabled during Sleep mode
1: IO port C clock enabled during Sleep mode

Bit 1 **GPIOBLPEN:** IO port B clock enable during Sleep mode
Set and cleared by software.
0: IO port B clock disabled during Sleep mode
1: IO port B clock enabled during Sleep mode

Bit 0 **GPIOALPEN:** IO port A clock enable during sleep mode
Set and cleared by software.
0: IO port A clock disabled during Sleep mode
1: IO port A clock enabled during Sleep mode

7.3.16 RCC AHB2 peripheral clock enable in low power mode register (RCC_AHB2LPENR)

Address offset: 0x54

Reset value: 0x0000 00F1

Access: no wait state, word, half-word and byte access.

31	30	29	28	27	26	25	24	23	22	21	20	19	18	17	16
Reserved															
15	14	13	12	11	10	9	8	7	6	5	4	3	2	1	0
Reserved								OTGFS LPEN	RNG LPEN	HASH LPEN	CRYP LPEN	Reserved			DCMI LPEN
								rw	rw	rw	rw				rw

Bits 31:8 Reserved, must be kept at reset value.

Bit 7 **OTGFSLPEN:** USB OTG FS clock enable during Sleep mode
Set and cleared by software.
0: USB OTG FS clock disabled during Sleep mode
1: USB OTG FS clock enabled during Sleep mode

Bit 6 **RNGLPEN:** Random number generator clock enable during Sleep mode
Set and cleared by software.
0: Random number generator clock disabled during Sleep mode
1: Random number generator clock enabled during Sleep mode

Bit 5 **HASHLPEN:** Hash modules clock enable during Sleep mode
Set and cleared by software.
0: Hash modules clock disabled during Sleep mode
1: Hash modules clock enabled during Sleep mode

Bit 4 **CRYPLPEN:** Cryptography modules clock enable during Sleep mode
Set and cleared by software.
0: cryptography modules clock disabled during Sleep mode
1: cryptography modules clock enabled during Sleep mode

Bits 3:1 Reserved, must be kept at reset value.

Bit 0 **DCMILPEN:** Camera interface enable during Sleep mode
Set and cleared by software.
0: Camera interface clock disabled during Sleep mode
1: Camera interface clock enabled during Sleep mode

7.3.17 RCC AHB3 peripheral clock enable in low power mode register (RCC_AHB3LPENR)

Address offset: 0x58

Reset value: 0x0000 0001

Access: no wait state, word, half-word and byte access.

31	30	29	28	27	26	25	24	23	22	21	20	19	18	17	16
Reserved															
15	14	13	12	11	10	9	8	7	6	5	4	3	2	1	0
Reserved															FSMC LPEN
															rw

Bits 31:1 Reserved, must be kept at reset value.

Bit 0 **FSMCLPEN:** Flexible static memory controller module clock enable during Sleep mode
Set and cleared by software.
0: FSMC module clock disabled during Sleep mode
1: FSMC module clock enabled during Sleep mode

7.3.18 RCC APB1 peripheral clock enable in low power mode register (RCC_APB1LPENR)

Address offset: 0x60

Reset value: 0x36FE C9FF

Access: no wait state, word, half-word and byte access.

31	30	29	28	27	26	25	24	23	22	21	20	19	18	17	16
Reserved		DAC LPEN	PWR LPEN	RESERVED	CAN2 LPEN	CAN1 LPEN	Reser-ved	I2C3 LPEN	I2C2 LPEN	I2C1 LPEN	UART5 LPEN	UART4 LPEN	USART 3 LPEN	USART 2 LPEN	Reser-ved
		rw	rw		rw	rw		rw	rw	rw	rw	rw	rw	rw	

15	14	13	12	11	10	9	8	7	6	5	4	3	2	1	0
SPI3 LPEN	SPI2 LPEN	Reserved		WWDG LPEN	Reserved		TIM14 LPEN	TIM13 LPEN	TIM12 LPEN	TIM7 LPEN	TIM6 LPEN	TIM5 LPEN	TIM4 LPEN	TIM3 LPEN	TIM2 LPEN
rw	rw			rw			rw	rw	rw	rw	rw	rw	rw	rw	rw

Bits 31:30 Reserved, must be kept at reset value.

Bit 29 **DACLPEN:** DAC interface clock enable during Sleep mode
Set and cleared by software.
0: DAC interface clock disabled during Sleep mode
1: DAC interface clock enabled during Sleep mode

Bit 28 **PWRLPEN:** Power interface clock enable during Sleep mode
Set and cleared by software.
0: Power interface clock disabled during Sleep mode
1: Power interface clock enabled during Sleep mode

Bit 27 Reserved, must be kept at reset value.

Bit 26 **CAN2LPEN:** CAN 2 clock enable during Sleep mode
Set and cleared by software.
0: CAN 2 clock disabled during sleep mode
1: CAN 2 clock enabled during sleep mode

Bit 25 **CAN1LPEN:** CAN 1 clock enable during Sleep mode
Set and cleared by software.
0: CAN 1 clock disabled during Sleep mode
1: CAN 1 clock enabled during Sleep mode

Bit 24 Reserved, must be kept at reset value.

Bit 23 **I2C3LPEN:** I2C3 clock enable during Sleep mode
Set and cleared by software.
0: I2C3 clock disabled during Sleep mode
1: I2C3 clock enabled during Sleep mode

Bit 22 **I2C2LPEN:** I2C2 clock enable during Sleep mode
Set and cleared by software.
0: I2C2 clock disabled during Sleep mode
1: I2C2 clock enabled during Sleep mode

Bit 21 **I2C1LPEN:** I2C1 clock enable during Sleep mode
Set and cleared by software.
0: I2C1 clock disabled during Sleep mode
1: I2C1 clock enabled during Sleep mode

Bit 20 **UART5LPEN:** UART5 clock enable during Sleep mode
Set and cleared by software.
0: UART5 clock disabled during Sleep mode
1: UART5 clock enabled during Sleep mode

Bit 19 **UART4LPEN:** UART4 clock enable during Sleep mode
Set and cleared by software.
0: UART4 clock disabled during Sleep mode
1: UART4 clock enabled during Sleep mode

Bit 18 **USART3LPEN:** USART3 clock enable during Sleep mode
Set and cleared by software.
0: USART3 clock disabled during Sleep mode
1: USART3 clock enabled during Sleep mode

Bit 17 **USART2LPEN:** USART2 clock enable during Sleep mode
Set and cleared by software.
0: USART2 clock disabled during Sleep mode
1: USART2 clock enabled during Sleep mode

Bit 16 Reserved, must be kept at reset value.

Bit 15 **SPI3LPEN:** SPI3 clock enable during Sleep mode
Set and cleared by software.
0: SPI3 clock disabled during Sleep mode
1: SPI3 clock enabled during Sleep mode

Bit 14 **SPI2LPEN:** SPI2 clock enable during Sleep mode
Set and cleared by software.
0: SPI2 clock disabled during Sleep mode
1: SPI2 clock enabled during Sleep mode

Bits 13:12 Reserved, must be kept at reset value.

Bit 11 **WWDGLPEN:** Window watchdog clock enable during Sleep mode
Set and cleared by software.
0: Window watchdog clock disabled during sleep mode
1: Window watchdog clock enabled during sleep mode

Bits 10:9 Reserved, must be kept at reset value.

Bit 8 **TIM14LPEN:** TIM14 clock enable during Sleep mode
Set and cleared by software.
0: TIM14 clock disabled during Sleep mode
1: TIM14 clock enabled during Sleep mode

Bit 7 **TIM13LPEN:** TIM13 clock enable during Sleep mode
Set and cleared by software.
0: TIM13 clock disabled during Sleep mode
1: TIM13 clock enabled during Sleep mode

Bit 6 **TIM12LPEN:** TIM12 clock enable during Sleep mode
Set and cleared by software.
0: TIM12 clock disabled during Sleep mode
1: TIM12 clock enabled during Sleep mode

Bit 5 **TIM7LPEN:** TIM7 clock enable during Sleep mode
Set and cleared by software.
0: TIM7 clock disabled during Sleep mode
1: TIM7 clock enabled during Sleep mode

Bit 4 **TIM6LPEN:** TIM6 clock enable during Sleep mode
Set and cleared by software.
0: TIM6 clock disabled during Sleep mode
1: TIM6 clock enabled during Sleep mode

Bit 3 **TIM5LPEN:** TIM5 clock enable during Sleep mode
Set and cleared by software.
0: TIM5 clock disabled during Sleep mode
1: TIM5 clock enabled during Sleep mode

Bit 2 **TIM4LPEN:** TIM4 clock enable during Sleep mode
Set and cleared by software.
0: TIM4 clock disabled during Sleep mode
1: TIM4 clock enabled during Sleep mode

Bit 1 **TIM3LPEN:** TIM3 clock enable during Sleep mode
Set and cleared by software.
0: TIM3 clock disabled during Sleep mode
1: TIM3 clock enabled during Sleep mode

Bit 0 **TIM2LPEN:** TIM2 clock enable during Sleep mode
Set and cleared by software.
0: TIM2 clock disabled during Sleep mode
1: TIM2 clock enabled during Sleep mode

7.3.19 RCC APB2 peripheral clock enabled in low power mode register (RCC_APB2LPENR)

Address offset: 0x64

Reset value: 0x0007 5F33

Access: no wait state, word, half-word and byte access.

31	30	29	28	27	26	25	24	23	22	21	20	19	18	17	16
Reserved													TIM11 LPEN	TIM10 LPEN	TIM9 LPEN
													rw	rw	rw

15	14	13	12	11	10	9	8	7	6	5	4	3	2	1	0
Reser-ved	SYSCFG LPEN	Reser-ved	SPI1 LPEN	SDIO LPEN	ADC3 LPEN	ADC2 LPEN	ADC1 LPEN	Reserved		USART 6 LPEN	USART 1 LPEN	Reserved		TIM8 LPEN	TIM1 LPEN
	rw		rw	rw	rw	rw	rw			rw	rw			rw	rw

Bits 31:19 Reserved, must be kept at reset value.

Bit 18 **TIM11LPEN:** TIM11 clock enable during Sleep mode
Set and cleared by software.
0: TIM11 clock disabled during Sleep mode
1: TIM11 clock enabled during Sleep mode

Bit 17 **TIM10LPEN:** TIM10 clock enable during Sleep mode
Set and cleared by software.
0: TIM10 clock disabled during Sleep mode
1: TIM10 clock enabled during Sleep mode

Bit 16 **TIM9LPEN:** TIM9 clock enable during sleep mode
Set and cleared by software.
0: TIM9 clock disabled during Sleep mode
1: TIM9 clock enabled during Sleep mode

Bit 15 Reserved, must be kept at reset value.

Bit 14 **SYSCFGLPEN:** System configuration controller clock enable during Sleep mode
Set and cleared by software.
0: System configuration controller clock disabled during Sleep mode
1: System configuration controller clock enabled during Sleep mode

Bit 13 Reserved, must be kept at reset value.

Bit 12 **SPI1LPEN:** SPI1 clock enable during Sleep mode
Set and cleared by software.
0: SPI1 clock disabled during Sleep mode
1: SPI1 clock enabled during Sleep mode

Bit 11 **SDIOLPEN:** SDIO clock enable during Sleep mode
Set and cleared by software.
0: SDIO module clock disabled during Sleep mode
1: SDIO module clock enabled during Sleep mode

Bit 10 **ADC3LPEN:** ADC 3 clock enable during Sleep mode
Set and cleared by software.
0: ADC 3 clock disabled during Sleep mode
1: ADC 3 clock disabled during Sleep mode

Bit 9 **ADC2LPEN:** ADC2 clock enable during Sleep mode
Set and cleared by software.
0: ADC2 clock disabled during Sleep mode
1: ADC2 clock disabled during Sleep mode

Bit 8 **ADC1LPEN:** ADC1 clock enable during Sleep mode
Set and cleared by software.
0: ADC1 clock disabled during Sleep mode
1: ADC1 clock disabled during Sleep mode

Bits 7:6 Reserved, must be kept at reset value.

Bit 5 **USART6LPEN:** USART6 clock enable during Sleep mode
Set and cleared by software.
0: USART6 clock disabled during Sleep mode
1: USART6 clock enabled during Sleep mode

Bit 4 **USART1LPEN:** USART1 clock enable during Sleep mode
Set and cleared by software.
0: USART1 clock disabled during Sleep mode
1: USART1 clock enabled during Sleep mode

Bits 3:2 Reserved, must be kept at reset value.

Bit 1 **TIM8LPEN:** TIM8 clock enable during Sleep mode
Set and cleared by software.
0: TIM8 clock disabled during Sleep mode
1: TIM8 clock enabled during Sleep mode

Bit 0 **TIM1LPEN:** TIM1 clock enable during Sleep mode
Set and cleared by software.
0: TIM1 clock disabled during Sleep mode
1: TIM1 clock enabled during Sleep mode

7.3.20 RCC Backup domain control register (RCC_BDCR)

Address offset: 0x70

Reset value: 0x0000 0000, reset by Backup domain reset.
Access: 0 ≤ wait state ≤ 3, word, half-word and byte access
Wait states are inserted in case of successive accesses to this register.

The LSEON, LSEBYP, RTCSEL and RTCEN bits in the *RCC Backup domain control register (RCC_BDCR)* are in the Backup domain. As a result, after Reset, these bits are write-protected and the DBP bit in the *PWR power control register (PWR_CR) for STM32F405xx/07xx and STM32F415xx/17xx* has to be set before these can be modified. Refer to *Section 7.1.1: System reset on page 213* for further information. These bits are only reset after a Backup domain Reset (see *Section 7.1.3: Backup domain reset*). Any internal or external Reset will not have any effect on these bits.

31	30	29	28	27	26	25	24	23	22	21	20	19	18	17	16
Reserved															BDRST
															rw

15	14	13	12	11	10	9	8	7	6	5	4	3	2	1	0
RTCEN	Reserved					RTCSEL[1:0]		Reserved					LSEBYP	LSERDY	LSEON
rw						rw	rw						rw	r	rw

Bits 31:17 Reserved, must be kept at reset value.

Bit 16 **BDRST:** Backup domain software reset
Set and cleared by software.
0: Reset not activated
1: Resets the entire Backup domain

Note: The BKPSRAM is not affected by this reset, the only way of resetting the BKPSRAM is through the Flash interface when a protection level change from level 1 to level 0 is requested.

Bit 15 **RTCEN:** RTC clock enable
Set and cleared by software.
0: RTC clock disabled
1: RTC clock enabled

Bits 14:10 Reserved, must be kept at reset value.

Bits 9:8 **RTCSEL[1:0]:** RTC clock source selection
Set by software to select the clock source for the RTC. Once the RTC clock source has been selected, it cannot be changed anymore unless the Backup domain is reset. The BDRST bit can be used to reset them.
00: No clock
01: LSE oscillator clock used as the RTC clock
10: LSI oscillator clock used as the RTC clock
11: HSE oscillator clock divided by a programmable prescaler (selection through the RTCPRE[4:0] bits in the RCC clock configuration register (RCC_CFGR)) used as the RTC clock

Bits 7:3 Reserved, must be kept at reset value.

Bit 2 **LSEBYP:** External low-speed oscillator bypass

Set and cleared by software to bypass the oscillator. This bit can be written only when the LSE clock is disabled.

0: LSE oscillator not bypassed

1: LSE oscillator bypassed

Bit 1 **LSERDY:** External low-speed oscillator ready

Set and cleared by hardware to indicate when the external 32 kHz oscillator is stable. After the LSEON bit is cleared, LSERDY goes low after 6 external low-speed oscillator clock cycles.

0: LSE clock not ready

1: LSE clock ready

Bit 0 **LSEON:** External low-speed oscillator enable

Set and cleared by software.

0: LSE clock OFF

1: LSE clock ON

7.3.21 RCC clock control & status register (RCC_CSR)

Address offset: 0x74

Reset value: 0x0E00 0000, reset by system reset, except reset flags by power reset only.

Access: 0 ≤ wait state ≤ 3, word, half-word and byte access

Wait states are inserted in case of successive accesses to this register.

31	30	29	28	27	26	25	24	23	22	21	20	19	18	17	16
LPWR RSTF	WWDG RSTF	IWDG RSTF	SFT RSTF	POR RSTF	PIN RSTF	BORRS TF	RMVF	Reserved							
r	r	r	r	r	r	r	rt_w								

15	14	13	12	11	10	9	8	7	6	5	4	3	2	1	0
Reserved														LSIRDY	LSION
														r	rw

Bit 31 **LPWRRSTF:** Low-power reset flag

Set by hardware when a Low-power management reset occurs.

Cleared by writing to the RMVF bit.

0: No Low-power management reset occurred

1: Low-power management reset occurred

For further information on Low-power management reset, refer to *Low-power management reset*.

Bit 30 **WWDGRSTF:** Window watchdog reset flag

Set by hardware when a window watchdog reset occurs.

Cleared by writing to the RMVF bit.

0: No window watchdog reset occurred

1: Window watchdog reset occurred

Bit 29 **IWDGRSTF**: Independent watchdog reset flag

Set by hardware when an independent watchdog reset from V_{DD} domain occurs.

Cleared by writing to the RMVF bit.

0: No watchdog reset occurred

1: Watchdog reset occurred

Bit 28 **SFTRSTF:** Software reset flag

Set by hardware when a software reset occurs.
Cleared by writing to the RMVF bit.
0: No software reset occurred
1: Software reset occurred

Bit 27 **PORRSTF:** POR/PDR reset flag

Set by hardware when a POR/PDR reset occurs.
Cleared by writing to the RMVF bit.
0: No POR/PDR reset occurred
1: POR/PDR reset occurred

Bit 26 **PINRSTF:** PIN reset flag

Set by hardware when a reset from the NRST pin occurs.
Cleared by writing to the RMVF bit.
0: No reset from NRST pin occurred
1: Reset from NRST pin occurred

Bit 25 **BORRSTF:** BOR reset flag

Cleared by software by writing the RMVF bit.
Set by hardware when a POR/PDR or BOR reset occurs.
0: No POR/PDR or BOR reset occurred
1: POR/PDR or BOR reset occurred

Bit 24 **RMVF:** Remove reset flag

Set by software to clear the reset flags.
0: No effect
1: Clear the reset flags

Bits 23:2 Reserved, must be kept at reset value.

Bit 1 **LSIRDY:** Internal low-speed oscillator ready

Set and cleared by hardware to indicate when the internal RC 40 kHz oscillator is stable. After the LSION bit is cleared, LSIRDY goes low after 3 LSI clock cycles.
0: LSI RC oscillator not ready
1: LSI RC oscillator ready

Bit 0 **LSION:** Internal low-speed oscillator enable

Set and cleared by software.
0: LSI RC oscillator OFF
1: LSI RC oscillator ON

7.3.22 RCC spread spectrum clock generation register (RCC_SSCGR)

Address offset: 0x80

Reset value: 0x0000 0000

Access: no wait state, word, half-word and byte access.

The spread spectrum clock generation is available only for the main PLL.

The RCC_SSCGR register must be written either before the main PLL is enabled or after the main PLL disabled.

Note: For full details about PLL spread spectrum clock generation (SSCG) characteristics, refer to the "Electrical characteristics" section in your device datasheet.

31	30	29	28	27	26	25	24	23	22	21	20	19	18	17	16
SSCG EN	SPR EAD SEL	Reserved		INCSTEP											
rw	rw			rw	rw	rw		rw	rw	rw	rw	rw	rw	rw	rw

15	14	13	12	11	10	9	8	7	6	5	4	3	2	1	0
INCSTEP			MODPER												
rw	rw	rw	rw	rw	rw	rw	rw	rw	rw	rw	rw	rw	rw	rw	rw

Bit 31 **SSCGEN:** Spread spectrum modulation enable
Set and cleared by software.
0: Spread spectrum modulation DISABLE. (To write after clearing CR[24]=PLLON bit)
1: Spread spectrum modulation ENABLE. (To write before setting CR[24]=PLLON bit)

Bit 30 **SPREADSEL:** Spread Select
Set and cleared by software.
To write before to set CR[24]=PLLON bit.
0: Center spread
1: Down spread

Bits 29:28 Reserved, must be kept at reset value.

Bits 27:13 **INCSTEP:** Incrementation step
Set and cleared by software. To write before setting CR[24]=PLLON bit.
Configuration input for modulation profile amplitude.

Bits 12:0 **MODPER:** Modulation period
Set and cleared by software. To write before setting CR[24]=PLLON bit.
Configuration input for modulation profile period.

7.3.23 RCC PLLI2S configuration register (RCC_PLLI2SCFGR)

Address offset: 0x84

Reset value: 0x2000 3000

Access: no wait state, word, half-word and byte access.

This register is used to configure the PLLI2S clock outputs according to the formulas:

- $f_{(VCO\ clock)} = f_{(PLLI2S\ clock\ input)} \times (PLLI2SN / PLLM)$
- $f_{(PLL\ I2S\ clock\ output)} = f_{(VCO\ clock)} / PLLI2SR$

31	30	29	28	27	26	25	24	23	22	21	20	19	18	17	16
Reserved	PLLI2SR2	PLLI2SR1	PLLI2SR0	Reserved											
	rw	rw	rw												

15	14	13	12	11	10	9	8	7	6	5	4	3	2	1	0
Reserved	PLLI2SN8	PLLI2SN7	PLLI2SN6	PLLI2SN5	PLLI2SN4	PLLI2SN3	PLLI2SN2	PLLI2SN1	PLLI2SN0	Reserved					
	rw	rw	rw	rw	rw	rw	rw	rw	rw						

Bit 31 Reserved, must be kept at reset value.

Bits 30:28 **PLLI2SR:** PLLI2S division factor for I2S clocks

Set and cleared by software to control the I2S clock frequency. These bits should be written only if the PLLI2S is disabled. The factor must be chosen in accordance with the prescaler values inside the I2S peripherals, to reach 0.3% error when using standard crystals and 0% error with audio crystals. For more information about I2S clock frequency and precision, refer to *Section 28.4.4: Clock generator* in the I2S chapter.

Caution: The I2Ss requires a frequency lower than or equal to 192 MHz to work correctly.

I2S clock frequency = VCO frequency / PLLR with $2 \leq PLLR \leq 7$

000: PLLR = 0, wrong configuration
001: PLLR = 1, wrong configuration
010: PLLR = 2
...
111: PLLR = 7

Bits 27:15 Reserved, must be kept at reset value.

Bits 14:6 **PLLI2SN:** PLLI2S multiplication factor for VCO

These bits are set and cleared by software to control the multiplication factor of the VCO. These bits can be written only when PLLI2S is disabled. Only half-word and word accesses are allowed to write these bits.

Caution: The software has to set these bits correctly to ensure that the VCO output frequency is between 100 and 432 MHz.

VCO output frequency = VCO input frequency × PLLI2SN with 50 ≤PLLI2SN ≤432

000000000: PLLI2SN = 0, wrong configuration
000000001: PLLI2SN = 1, wrong configuration
...
000110010: PLLI2SN = 50
...
001100011: PLLI2SN = 99
001100100: PLLI2SN = 100
001100101: PLLI2SN = 101
001100110: PLLI2SN = 102
...
110110000: PLLI2SN = 432
110110001: PLLI2SN = 433, wrong configuration
...
111111111: PLLI2SN = 511, wrong configuration

Note: Multiplication factors ranging from 50 and 99 are possible for VCO input frequency higher than 1 MHz. However care must be taken that the minimum VCO output frequency respects the value specified above.

Bits 5:0 Reserved, must be kept at reset value.

7.3.24 RCC register map

Table 34 gives the register map and reset values.

Table 34. RCC register map and reset values

Addr. offset	Register name	31	30	29	28	27	26	25	24	23	22	21	20	19	18	17	16	15	14	13	12	11	10	9	8	7	6	5	4	3	2	1	0
0x00	RCC_CR	Reserved				PLL I2SRDY	PLL I2SON	PLL RDY	PLL ON	Reserved				CSSON	HSEBYP	HSERDY	HSEON	HSICAL 7	HSICAL 6	HSICAL 5	HSICAL 4	HSICAL 3	HSICAL 2	HSICAL 1	HSICAL 0	HSITRIM 4	HSITRIM 3	HSITRIM 2	HSITRIM 1	HSITRIM 0	Reserved	HSIRDY	HSION
0x04	RCC_ PLLCFGR	Reserved				PLLQ 3	PLLQ 2	PLLQ 1	PLLQ 0	Reserved	PLLSRC	Reserved				PLLP 1	PLLP 0	Reserved	PLLN 8	PLLN 7	PLLN 6	PLLN 5	PLLN 4	PLLN 3	PLLN 2	PLLN 1	PLLN 0	PLLM 5	PLLM 4	PLLM 3	PLLM 2	PLLM 1	PLLM 0
0x08	RCC_CFGR	MCO2 1	MCO2 0	MCO2PRE2	MCO2PRE1	MCO2PRE0	MCO1PRE2	MCO1PRE1	MCO1PRE0	I2SSRC	MCO1 1	MCO1 0	RTCPRE 4	RTCPRE 3	RTCPRE 2	RTCPRE 1	RTCPRE 0	PPRE2 2	PPRE2 1	PPRE2 0	PPRE1 2	PPRE1 1	PPRE1 0	Reserved		HPRE 3	HPRE 2	HPRE 1	HPRE 0	SWS 1	SWS 0	SW 1	SW 0
0x0C	RCC_CIR	Reserved								CSSC	Reserved	PLLI2SRDYC	PLLRDYC	HSERDYC	HSIRDYC	LSERDYC	LSIRDYC	Reserved		PLLI2SRDYIE	PLLRDYIE	HSERDYIE	HSIRDYIE	LSERDYIE	LSIRDYIE	CSSF	Reserved	PLLI2SRDYF	PLLRDYF	HSERDYF	HSIRDYF	LSERDYF	LSIRDYF
0x10	RCC_ AHB1RSTR	Reserved		OTGHSRST	Reserved			ETHMACRST	Reserved		DMA2RST	DMA1RST	Reserved								CRCRST	Reserved			GPIOIRST	GPIOHRST	GPIOGRST	GPIOFRST	GPIOERST	GPIODRST	GPIOCRST	GPIOBRST	GPIOARST
0x14	RCC_ AHB2RSTR	Reserved																								OTGFSRST	RNGRST	HSAHRST	CRYPRST	Reserved			DCMIRST
0x18	RCC_ AHB3RSTR	Reserved																															FSMCRST
0x1C	Reserved	Reserved																															
0x20	RCC_ APB1RSTR	Reserved		DACRST	PWRRST	Reserved	CAN2RST	CAN1RST	Reserved	I2C3RST	I2C2RST	I2C1RST	UART5RST	UART4RST	UART3RST	UART2RST	Reserved	SPI3RST	SPI2RST	Reserved		WWDGRST	Reserved		TIM14RST	TIM13RST	TIM12RST	TIM7RST	TIM6RST	TIM5RST	TIM4RST	TIM3RST	TIM2RST
0x24	RCC_ APB2RSTR	Reserved													TIM11RST	TIM10RST	TIM9RST	Reserved	SYSCFGRST	Reserved	SPI1RST	SDIORST	Reserved		ADCRST	Reserved		USART6RST	USART1RST	Reserved		TIM8RST	TIM1RST
0x28	Reserved	Reserved																															
0x2C	Reserved	Reserved																															
0x30	RCC_ AHB1ENR	Reserved	OTGHSULPIEN	OTGHSEN	ETHMACPTPEN	ETHMACRXEN	ETHMACTXEN	ETHMACEN	Reserved		DMA2EN	DMA1EN	CCMDATARAMEN	Reserved	BKPSRAMEN	Reserved					CRCEN	Reserved			GPIOIEN	GPIOHEN	GPIOGEN	GPIOFEN	GPIOEEN	GPIODEN	GPIOCEN	GPIOBEN	GPIOAEN
0x34	RCC_ AHB2ENR	Reserved																								OTGFSEN	RNGEN	HASHEN	CRYPEN	Reserved			DCMIEN
0x38	RCC_ AHB3ENR	Reserved																															FSMCEN
0x3C	Reserved	Reserved																															

Table 34. RCC register map and reset values (continued)

Addr. offset	Register name	31	30	29	28	27	26	25	24	23	22	21	20	19	18	17	16	15	14	13	12	11	10	9	8	7	6	5	4	3	2	1	0
0x40	RCC_ APB1ENR	Reserved		DACEN	PWREN	Reserved	CAN2EN	CAN1EN	Reserved	I2C3EN	I2C2EN	I2C1EN	UART5EN	UART4EN	USART3EN	USART2EN	Reserved	SPI3EN	SPI2EN	Reserved		WWDGEN	Reserved		TIM14EN	TIM13EN	TIM12EN	TIM7EN	TIM6EN	TIM5EN	TIM4EN	TIM3EN	TIM2EN
0x44	RCC_ APB2ENR	Reserved													TIM11EN	TIM10EN	TIM9EN	Reserved	SYSCFGEN	Reserved	SPI1EN	SDIOEN	ADC3EN	ADC2EN	ADC1EN	Reserved		USART6EN	USART1EN	Reserved		TIM8EN	TIM1EN
0x48	Reserved	Reserved																															
0x4C	Reserved	Reserved																															
0x50	RCC_AHB1LP ENR	Reserved	OTGHSULPILPEN	OTGHSLPEN	ETHMACPTPLPEN	ETHMACRXLPEN	ETHMACTXLPEN	ETHMACLPEN	Reserved	DMA2LPEN	DMA1LPEN	Reserved			BKPSRAMLPEN	SRAM2LPEN	SRAM1LPEN	FLITFLPEN	Reserved	CRCLPEN	Reserved				GPIOILPEN	GPIOHLPEN	GPIOGLPEN	GPIOFLPEN	GPIOELPEN	GPIODLPEN	GPIOCLPEN	GPIOBLPEN	GPIOALPEN
0x54	RCC_AHB2LP ENR	Reserved																								OTGFSLPEN	RNGLPEN	HASHLPEN	CRYPLPEN	Reserved			DCMILPEN
0x58	RCC_AHB3LP ENR	Reserved																															FSMCLPEN
0x5C	Reserved	Reserved																															
0x60	RCC_APB1LP ENR	Reserved		DACLPEN	PWRLPEN	Reserved	CAN2LPEN	CAN1LPEN	Reserved	I2C3LPEN	I2C2LPEN	I2C1LPEN	UART5LPEN	UART4LPEN	USART3LPEN	USART2LPEN	Reserved	SPI3LPEN	SPI2LPEN	Reserved		WWDGLPEN	Reserved		TIM14LPEN	TIM13LPEN	TIM12LPEN	TIM7LPEN	TIM6LPEN	TIM5LPEN	TIM4LPEN	TIM3LPEN	TIM2LPEN
0x64	RCC_APB2LP ENR	Reserved													TIM11LPEN	TIM10LPEN	TIM9LPEN	Reserved	SYSCFGLPEN	Reserved	SPI1LPEN	SDIOLPEN	ADC3LPEN	ADC2LPEN	ADC1LPEN	Reserved		USART6LPEN	USART1LPEN	Reserved		TIM8LPEN	TIM1LPEN
0x68	Reserved	Reserved																															
0x6C	Reserved	Reserved																															
0x70	RCC_BDCR	Reserved															BDRST	RTCEN	Reserved					RTCSEL 1	RTCSEL 0	Reserved						LSEBYP	LSERDY	LSEON
0x74	RCC_CSR	LPWRRSTF	WWDGRSTF	WDGRSTF	SFTRSTF	PORRSTF	PADRSTF	BORRSTF	RMVF	Reserved																						LSIRDY	LSION
0x78	Reserved	Reserved																															
0x7C	Reserved	Reserved																															
0x80	RCC_SSCGR	SSCGEN	SPREADSEL	Reserved						INCSTEP											MODPER												
0x84	RCC_PLLI2SC FGR	Reserved	PLLI2SRx							Reserved									PLLI2SNx									Reserved					

Refer to *Section 2.3: Memory map* for the register boundary addresses.

8 General-purpose I/Os (GPIO)

This section applies to the whole STM32F4xx family, unless otherwise specified.

8.1 GPIO introduction

Each general-purpose I/O port has four 32-bit configuration registers (GPIOx_MODER, GPIOx_OTYPER, GPIOx_OSPEEDR and GPIOx_PUPDR), two 32-bit data registers (GPIOx_IDR and GPIOx_ODR), a 32-bit set/reset register (GPIOx_BSRR), a 32-bit locking register (GPIOx_LCKR) and two 32-bit alternate function selection register (GPIOx_AFRH and GPIOx_AFRL).

8.2 GPIO main features

- Up to 16 I/Os under control
- Output states: push-pull or open drain + pull-up/down
- Output data from output data register (GPIOx_ODR) or peripheral (alternate function output)
- Speed selection for each I/O
- Input states: floating, pull-up/down, analog
- Input data to input data register (GPIOx_IDR) or peripheral (alternate function input)
- Bit set and reset register (GPIOx_BSRR) for bitwise write access to GPIOx_ODR
- Locking mechanism (GPIOx_LCKR) provided to freeze the I/O configuration
- Analog function
- Alternate function input/output selection registers (at most 16 AFs per I/O)
- Fast toggle capable of changing every two clock cycles
- Highly flexible pin multiplexing allows the use of I/O pins as GPIOs or as one of several peripheral functions

8.3 GPIO functional description

Subject to the specific hardware characteristics of each I/O port listed in the datasheet, each port bit of the general-purpose I/O (GPIO) ports can be individually configured by software in several modes:

- Input floating
- Input pull-up
- Input-pull-down
- Analog
- Output open-drain with pull-up or pull-down capability
- Output push-pull with pull-up or pull-down capability
- Alternate function push-pull with pull-up or pull-down capability
- Alternate function open-drain with pull-up or pull-down capability

Each I/O port bit is freely programmable, however the I/O port registers have to be accessed as 32-bit words, half-words or bytes. The purpose of the GPIOx_BSRR register is to allow atomic read/modify accesses to any of the GPIO registers. In this way, there is no risk of an IRQ occurring between the read and the modify access.

Figure 25 shows the basic structure of a 5 V tolerant I/O port bit. *Table 39* gives the possible port bit configurations.

Figure 25. Basic structure of a five-volt tolerant I/O port bit

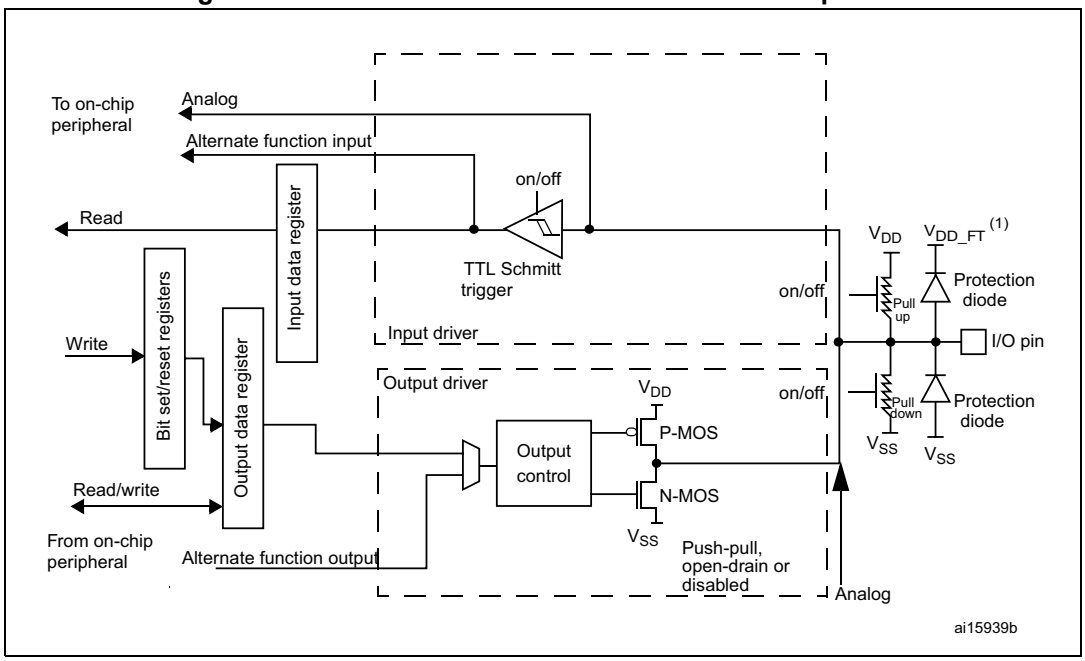

1. V_{DD_FT} is a potential specific to five-volt tolerant I/Os and different from V_{DD}.

Table 35. Port bit configuration table(1)

MODER(i) [1:0]	OTYPER(i)	OSPEEDR(i) [B:A]	PUPDR(i) [1:0]		I/O configuration	
01	0	SPEED [B:A]	0	0	GP output	PP
	0		0	1	GP output	PP + PU
	0		1	0	GP output	PP + PD
	0		1	1	Reserved	
	1		0	0	GP output	OD
	1		0	1	GP output	OD + PU
	1		1	0	GP output	OD + PD
	1		1	1	Reserved (GP output OD)	

Table 35. Port bit configuration table[1] (continued)

MODER(i) [1:0]	OTYPER(i)	OSPEEDR(i) [B:A]		PUPDR(i) [1:0]		I/O configuration	
10	0	SPEED [B:A]		0	0	AF	PP
	0			0	1	AF	PP + PU
	0			1	0	AF	PP + PD
	0			1	1	Reserved	
	1			0	0	AF	OD
	1			0	1	AF	OD + PU
	1			1	0	AF	OD + PD
	1			1	1	Reserved	
00	x	x	x	0	0	Input	Floating
	x	x	x	0	1	Input	PU
	x	x	x	1	0	Input	PD
	x	x	x	1	1	Reserved (input floating)	
11	x	x	x	0	0	Input/output	Analog
	x	x	x	0	1	Reserved	
	x	x	x	1	0		
	x	x	x	1	1		

1. GP = general-purpose, PP = push-pull, PU = pull-up, PD = pull-down, OD = open-drain, AF = alternate function.

8.3.1 General-purpose I/O (GPIO)

During and just after reset, the alternate functions are not active and the I/O ports are configured in input floating mode.

The debug pins are in AF pull-up/pull-down after reset:

- PA15: JTDI in pull-up
- PA14: JTCK/SWCLK in pull-down
- PA13: JTMS/SWDAT in pull-up
- PB4: NJTRST in pull-up
- PB3: JTDO in floating state

When the pin is configured as output, the value written to the output data register (GPIOx_ODR) is output on the I/O pin. It is possible to use the output driver in push-pull mode or open-drain mode (only the N-MOS is activated when 0 is output).

The input data register (GPIOx_IDR) captures the data present on the I/O pin at every AHB1 clock cycle.

All GPIO pins have weak internal pull-up and pull-down resistors, which can be activated or not depending on the value in the GPIOx_PUPDR register.

8.3.2 I/O pin multiplexer and mapping

The microcontroller I/O pins are connected to onboard peripherals/modules through a multiplexer that allows only one peripheral's alternate function (AF) connected to an I/O pin at a time. In this way, there can be no conflict between peripherals sharing the same I/O pin.

Each I/O pin has a multiplexer with sixteen alternate function inputs (AF0 to AF15) that can be configured through the GPIOx_AFRL (for pin 0 to 7) and GPIOx_AFRH (for pin 8 to 15) registers:

- After reset all I/Os are connected to the system's alternate function 0 (AF0)
- The peripherals' alternate functions are mapped from AF1 to AF13
- Cortex®-M4 with FPU EVENTOUT is mapped on AF15

This structure is shown in *Figure 26* below.

In addition to this flexible I/O multiplexing architecture, each peripheral has alternate functions mapped onto different I/O pins to optimize the number of peripherals available in smaller packages.

To use an I/O in a given configuration, proceed as follows:

- **System function**

  Connect the I/O to AF0 and configure it depending on the function used:
  - JTAG/SWD, after each device reset these pins are assigned as dedicated pins immediately usable by the debugger host (not controlled by the GPIO controller)
  - RTC_REFIN: this pin should be configured in Input floating mode
  - MCO1 and MCO2: these pins have to be configured in alternate function mode.

Note: The user can disable some or all of the JTAG/SWD pins and so release the associated pins for GPIO usage (released pins highlighted in gray in the table).

For more details please refer to *Section 7.2.10: Clock-out capability* and *Section 6.2.10: Clock-out capability*.

Table 36. Flexible SWJ-DP pin assignment

Available debug ports	SWJ I/O pin assigned				
	PA13 / JTMS/ SWDIO	PA14 / JTCK/ SWCLK	PA15 / JTDI	PB3 / JTDO	PB4/ NJTRST
Full SWJ (JTAG-DP + SW-DP) - Reset state	X	X	X	X	X
Full SWJ (JTAG-DP + SW-DP) but without NJTRST	X	X	X	X	
JTAG-DP Disabled and SW-DP Enabled	X	X			
JTAG-DP Disabled and SW-DP Disabled	Released				

- **GPIO**

  Configure the desired I/O as output or input in the GPIOx_MODER register.
- **Peripheral alternate function**

  For the ADC and DAC, configure the desired I/O as analog in the GPIOx_MODER register.

  For other peripherals:
  - Configure the desired I/O as an alternate function in the GPIOx_MODER register
  - Select the type, pull-up/pull-down and output speed via the GPIOx_OTYPER, GPIOx_PUPDR and GPIOx_OSPEEDR registers, respectively
  - Connect the I/O to the desired AFx in the GPIOx_AFRL or GPIOx_AFRH register
- **EVENTOUT**

  Configure the I/O pin used to output the Cortex®-M4 with FPU EVENTOUT signal by connecting it to AF15

Note: EVENTOUT is not mapped onto the following I/O pins: PC13, PC14, PC15, PH0, PH1 and PI8.

Please refer to the “Alternate function mapping” table in the datasheets for the detailed mapping of the system and peripherals’ alternate function I/O pins.

Figure 26. Selecting an alternate function on STM32F405xx/07xx and STM32F415xx/17xx

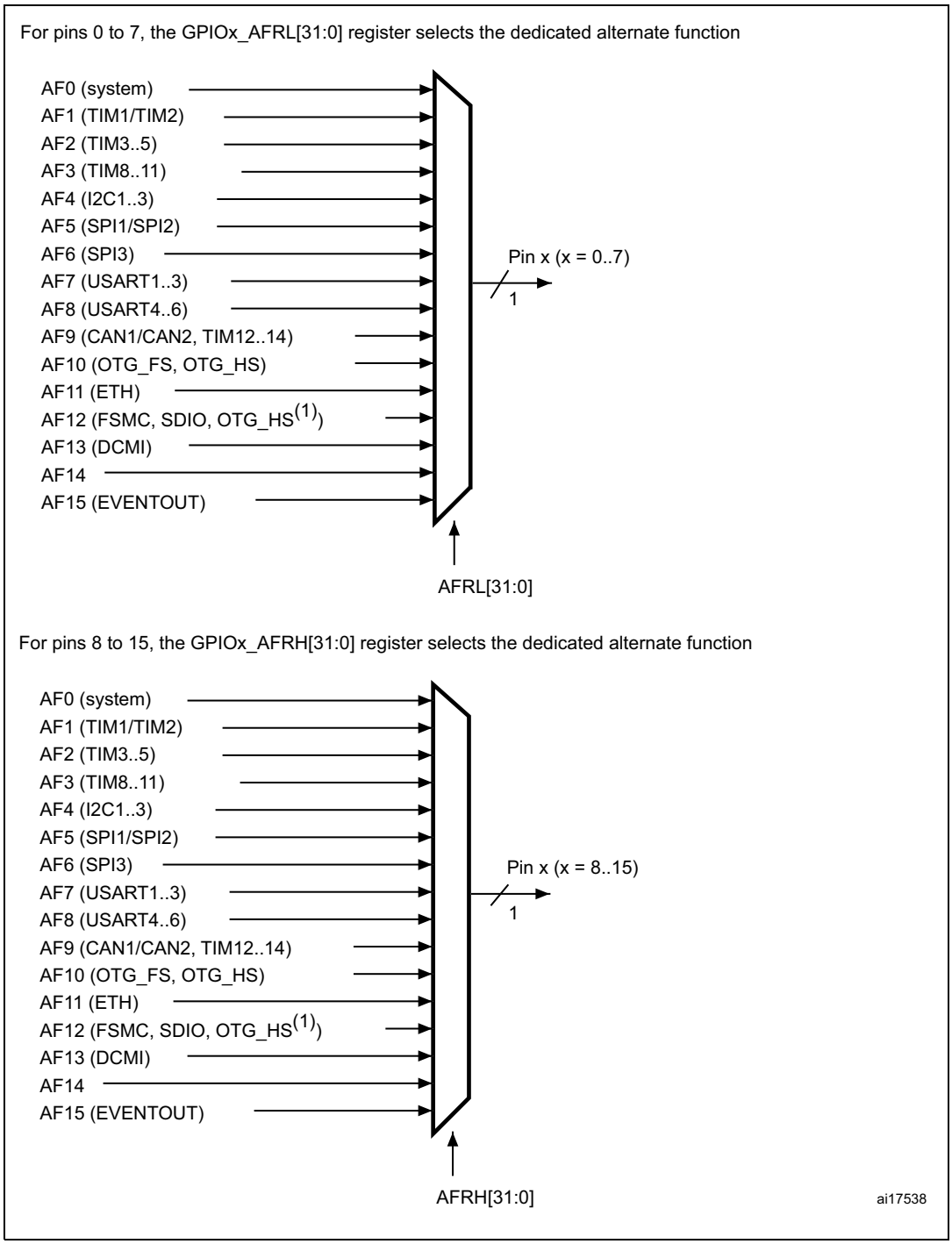

1. Configured in FS.

Figure 27. Selecting an alternate function on STM32F42xxx and STM32F43xxx

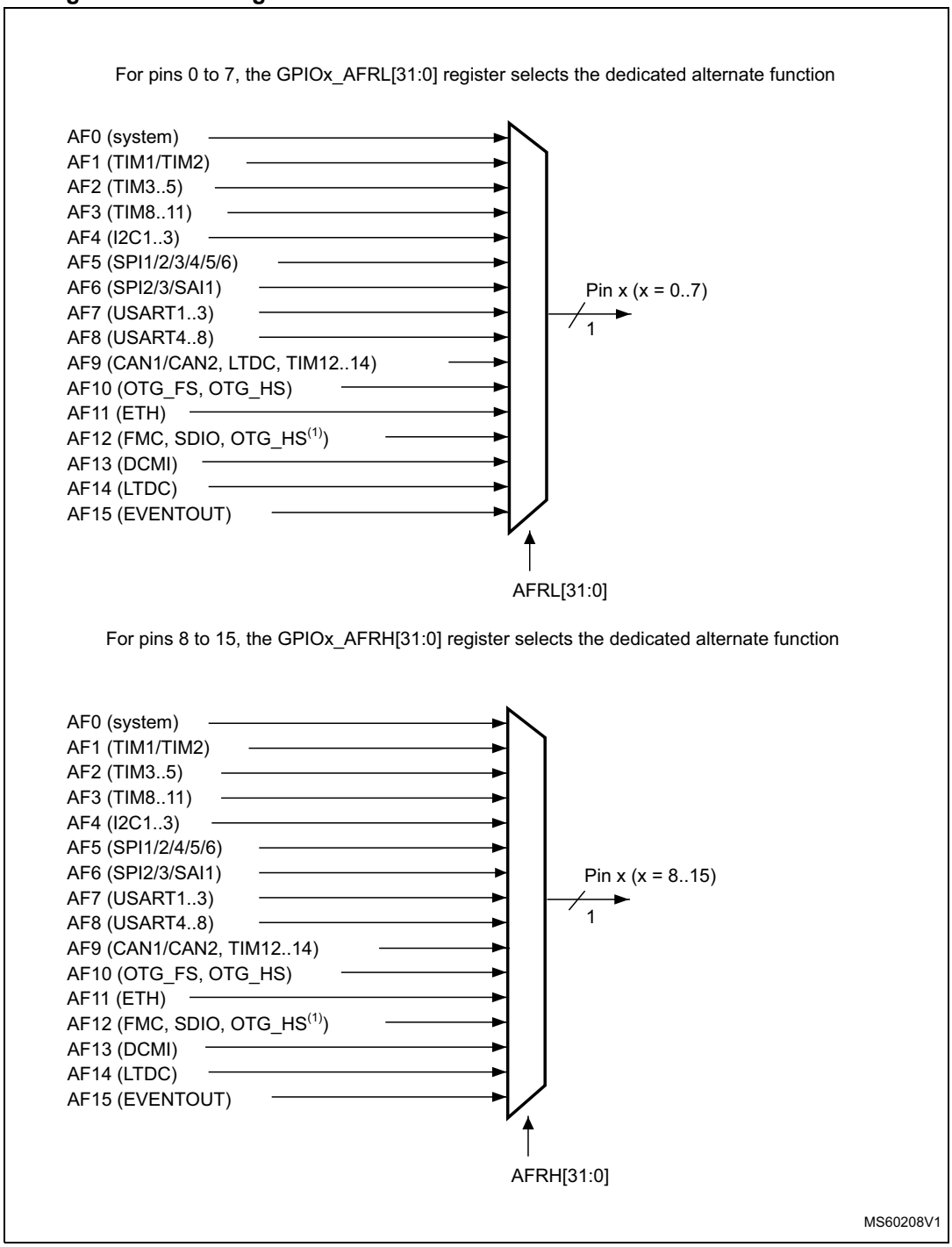

1. Configured in FS.

8.3.3 I/O port control registers

Each of the GPIOs has four 32-bit memory-mapped control registers (GPIOx_MODER, GPIOx_OTYPER, GPIOx_OSPEEDR, GPIOx_PUPDR) to configure up to 16 I/Os.

The GPIOx_MODER register is used to select the I/O direction (input, output, AF, analog). The GPIOx_OTYPER and GPIOx_OSPEEDR registers are used to select the output type (push-pull or open-drain) and speed (the I/O speed pins are directly connected to the corresponding GPIOx_OSPEEDR register bits whatever the I/O direction). The GPIOx_PUPDR register is used to select the pull-up/pull-down whatever the I/O direction.

8.3.4 I/O port data registers

Each GPIO has two 16-bit memory-mapped data registers: input and output data registers (GPIOx_IDR and GPIOx_ODR). GPIOx_ODR stores the data to be output, it is read/write accessible. The data input through the I/O are stored into the input data register (GPIOx_IDR), a read-only register.

See *Section 8.4.5: GPIO port input data register (GPIOx_IDR) (x = A..I/J/K)* and *Section 8.4.6: GPIO port output data register (GPIOx_ODR) (x = A..I/J/K)* for the register descriptions.

8.3.5 I/O data bitwise handling

The bit set reset register (GPIOx_BSRR) is a 32-bit register which allows the application to set and reset each individual bit in the output data register (GPIOx_ODR). The bit set reset register has twice the size of GPIOx_ODR.

To each bit in GPIOx_ODR, correspond two control bits in GPIOx_BSRR: BSRR(i) and BSRR(i+SIZE). When written to 1, bit BSRR(i) sets the corresponding ODR(i) bit. When written to 1, bit BSRR(i+SIZE) resets the ODR(i) corresponding bit.

Writing any bit to 0 in GPIOx_BSRR does not have any effect on the corresponding bit in GPIOx_ODR. If there is an attempt to both set and reset a bit in GPIOx_BSRR, the set action takes priority.

Using the GPIOx_BSRR register to change the values of individual bits in GPIOx_ODR is a “one-shot” effect that does not lock the GPIOx_ODR bits. The GPIOx_ODR bits can always be accessed directly. The GPIOx_BSRR register provides a way of performing atomic bitwise handling.

There is no need for the software to disable interrupts when programming the GPIOx_ODR at bit level: it is possible to modify one or more bits in a single atomic AHB1 write access.

8.3.6 GPIO locking mechanism

It is possible to freeze the GPIO control registers by applying a specific write sequence to the GPIOx_LCKR register. The frozen registers are GPIOx_MODER, GPIOx_OTYPER, GPIOx_OSPEEDR, GPIOx_PUPDR, GPIOx_AFRL and GPIOx_AFRH.

To write the GPIOx_LCKR register, a specific write / read sequence has to be applied. When the right LOCK sequence is applied to bit 16 in this register, the value of LCKR[15:0] is used to lock the configuration of the I/Os (during the write sequence the LCKR[15:0] value must be the same). When the LOCK sequence has been applied to a port bit, the value of the port bit can no longer be modified until the next MCU or peripheral reset. Each GPIOx_LCKR bit

freezes the corresponding bit in the control registers (GPIOx_MODER, GPIOx_OTYPER, GPIOx_OSPEEDR, GPIOx_PUPDR, GPIOx_AFRL and GPIOx_AFRH).

The LOCK sequence (refer to *Section 8.4.8: GPIO port configuration lock register (GPIOx_LCKR) (x = A..I/J/K)*) can only be performed using a word (32-bit long) access to the GPIOx_LCKR register due to the fact that GPIOx_LCKR bit 16 has to be set at the same time as the [15:0] bits.

For more details please refer to LCKR register description in *Section 8.4.8: GPIO port configuration lock register (GPIOx_LCKR) (x = A..I/J/K)*.

8.3.7 I/O alternate function input/output

Two registers are provided to select one out of the sixteen alternate function inputs/outputs available for each I/O. With these registers, you can connect an alternate function to some other pin as required by your application.
This means that a number of possible peripheral functions are multiplexed on each GPIO using the GPIOx_AFRL and GPIOx_AFRH alternate function registers. The application can thus select any one of the possible functions for each I/O. The AF selection signal being common to the alternate function input and alternate function output, a single channel is selected for the alternate function input/output of one I/O.

To know which functions are multiplexed on each GPIO pin, refer to the datasheets.

Note: The application is allowed to select one of the possible peripheral functions for each I/O at a time.

8.3.8 External interrupt/wakeup lines

All ports have external interrupt capability. To use external interrupt lines, the port must be configured in input mode, refer to *Section 12.2: External interrupt/event controller (EXTI)* and *Section 12.2.3: Wakeup event management*.

8.3.9 Input configuration

When the I/O port is programmed as Input:

- the output buffer is disabled
- the Schmitt trigger input is activated
- the pull-up and pull-down resistors are activated depending on the value in the GPIOx_PUPDR register
- The data present on the I/O pin are sampled into the input data register every AHB1 clock cycle
- A read access to the input data register provides the I/O State

Figure 28 shows the input configuration of the I/O port bit.

Figure 28. Input floating/pull up/pull down configurations

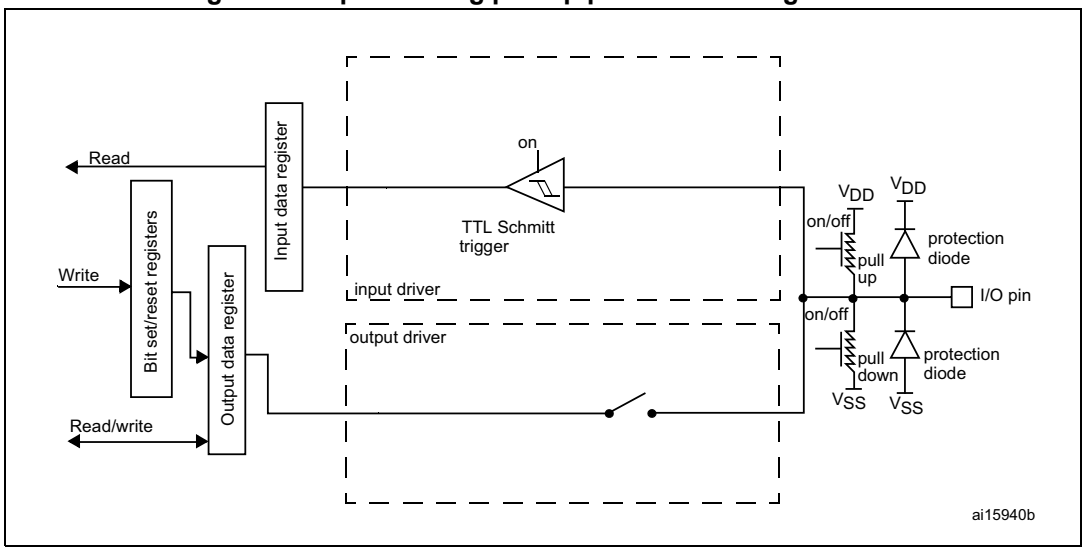

8.3.10 Output configuration

When the I/O port is programmed as output:

- The output buffer is enabled:
  - Open drain mode: A “0” in the Output register activates the N-MOS whereas a “1” in the Output register leaves the port in Hi-Z (the P-MOS is never activated)
  - Push-pull mode: A “0” in the Output register activates the N-MOS whereas a “1” in the Output register activates the P-MOS
- The Schmitt trigger input is activated
- The weak pull-up and pull-down resistors are activated or not depending on the value in the GPIOx_PUPDR register
- The data present on the I/O pin are sampled into the input data register every AHB1 clock cycle
- A read access to the input data register gets the I/O state
- A read access to the output data register gets the last written value

Figure 29 shows the output configuration of the I/O port bit.

Figure 29. Output configuration

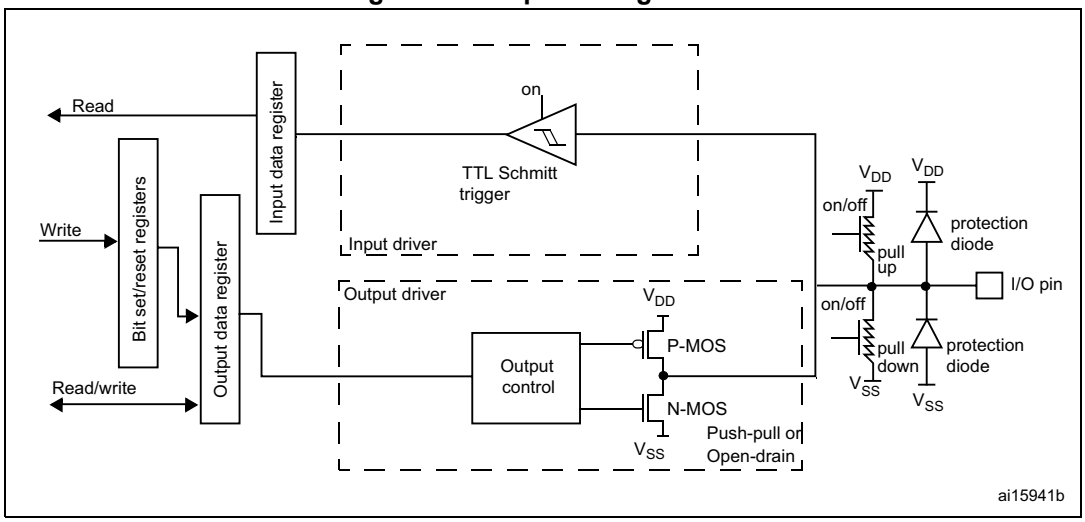

8.3.11 Alternate function configuration

When the I/O port is programmed as alternate function:

- The output buffer can be configured as open-drain or push-pull
- The output buffer is driven by the signal coming from the peripheral (transmitter enable and data)
- The Schmitt trigger input is activated
- The weak pull-up and pull-down resistors are activated or not depending on the value in the GPIOx_PUPDR register
- The data present on the I/O pin are sampled into the input data register every AHB1 clock cycle
- A read access to the input data register gets the I/O state

Figure 30 shows the Alternate function configuration of the I/O port bit.

Figure 30. Alternate function configuration

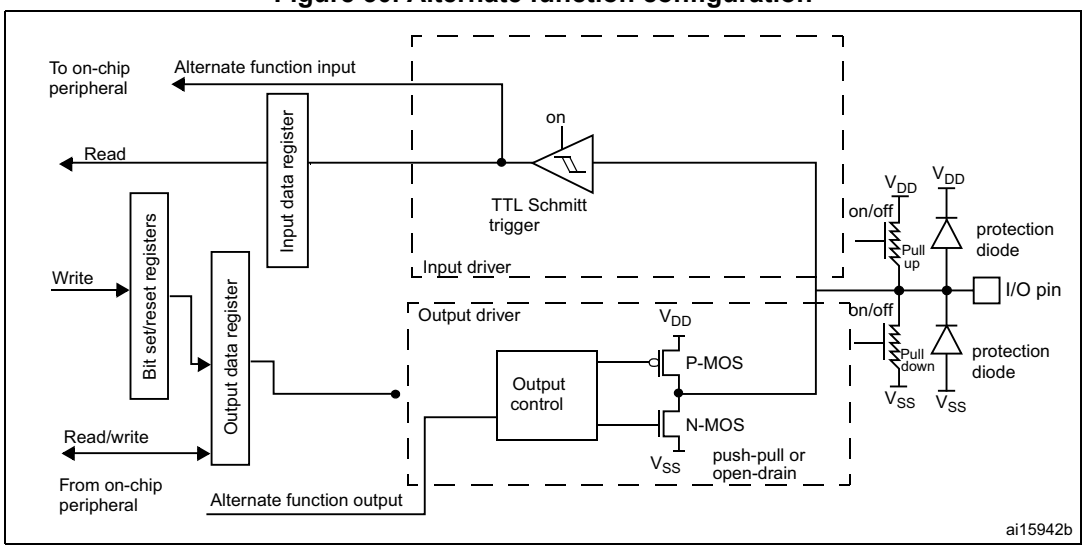

8.3.12 Analog configuration

When the I/O port is programmed as analog configuration:

- The output buffer is disabled
- The Schmitt trigger input is deactivated, providing zero consumption for every analog value of the I/O pin. The output of the Schmitt trigger is forced to a constant value (0).
- The weak pull-up and pull-down resistors are disabled
- Read access to the input data register gets the value “0”

Note: In the analog configuration, the I/O pins cannot be 5 Volt tolerant.

Figure 31 shows the high-impedance, analog-input configuration of the I/O port bit.

Figure 31. High impedance-analog configuration

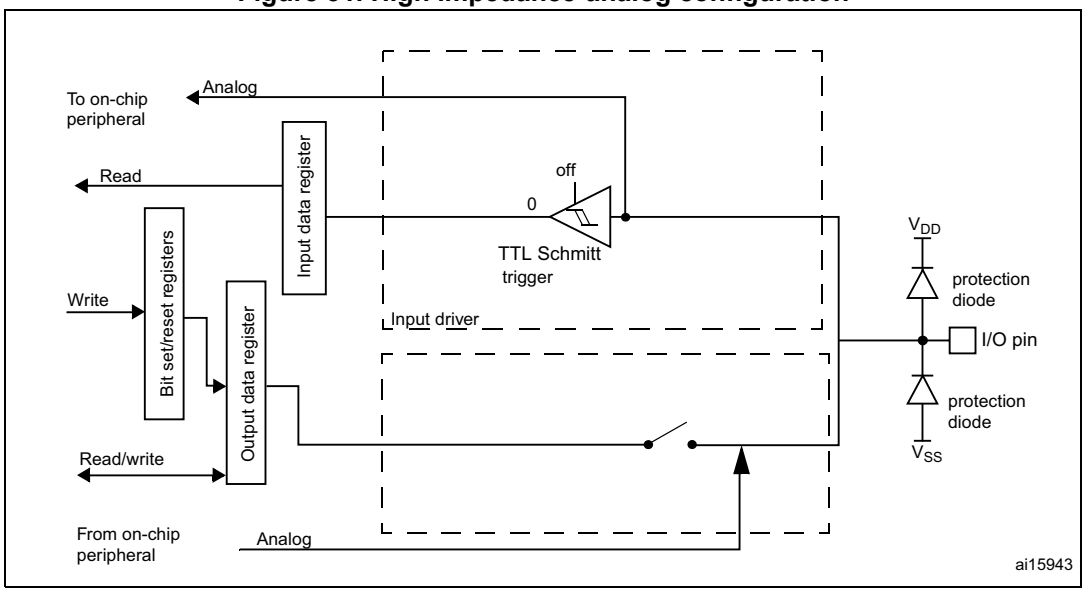

8.3.13 Using the OSC32_IN/OSC32_OUT pins as GPIO PC14/PC15 port pins

The LSE oscillator pins OSC32_IN and OSC32_OUT can be used as general-purpose PC14 and PC15 I/Os, respectively, when the LSE oscillator is off. The PC14 and PC15 I/Os are only configured as LSE oscillator pins OSC32_IN and OSC32_OUT when the LSE oscillator is ON. This is done by setting the LSEON bit in the RCC_BDCR register. The LSE has priority over the GPIO function.

Note: The PC14/PC15 GPIO functionality is lost when the 1.2 V domain is powered off (by the device entering the standby mode) or when the backup domain is supplied by V_{BAT} (V_{DD} no more supplied). In this case the I/Os are set in analog input mode.

8.3.14 Using the OSC_IN/OSC_OUT pins as GPIO PH0/PH1 port pins

The HSE oscillator pins OSC_IN/OSC_OUT can be used as general-purpose PH0/PH1 I/Os, respectively, when the HSE oscillator is OFF. (after reset, the HSE oscillator is off). The PH0/PH1 I/Os are only configured as OSC_IN/OSC_OUT HSE oscillator pins when the HSE oscillator is ON. This is done by setting the HSEON bit in the RCC_CR register. The HSE has priority over the GPIO function.

8.3.15 Selection of RTC_AF1 and RTC_AF2 alternate functions

The STM32F4xx feature two GPIO pins RTC_AF1 and RTC_AF2 that can be used for the detection of a tamper or time stamp event, or RTC_ALARM, or RTC_CALIB RTC outputs.

- The RTC_AF1 (PC13) can be used for the following purposes:

RTC_ALARM output: this output can be RTC Alarm A, RTC Alarm B or RTC Wakeup depending on the OSEL[1:0] bits in the RTC_CR register

- RTC_CALIB output: this feature is enabled by setting the COE[23] in the RTC_CR register
- RTC_TAMP1: tamper event detection
- RTC_TS: time stamp event detection

The RTC_AF2 (PI8) can be used for the following purposes:

- RTC_TAMP1: tamper event detection
- RTC_TAMP2: tamper event detection
- RTC_TS: time stamp event detection

The selection of the corresponding pin is performed through the RTC_TAFCR register as follows:

- TAMP1INSEL is used to select which pin is used as the RTC_TAMP1 tamper input
- TSINSEL is used to select which pin is used as the RTC_TS time stamp input
- ALARMOUTTYPE is used to select whether the RTC_ALARM is output in push-pull or open-drain mode

The output mechanism follows the priority order listed in *Table 37* and *Table 38*.

Table 37. RTC_AF1 pin(1)

Pin configuration and function	RTC_ALARM enabled	RTC_CALIB enabled	Tamper enabled	Time stamp enabled	TAMP1INSEL TAMPER1 pin selection	TSINSEL TIMESTAMP pin selection	ALARMOUTTYPE RTC_ALARM configuration
Alarm out output OD	1	Don’t care	Don’t care	Don’t care	Don’t care	Don’t care	0
Alarm out output PP	1	Don’t care	Don’t care	Don’t care	Don’t care	Don’t care	1
Calibration out output PP	0	1	Don’t care	Don’t care	Don’t care	Don’t care	Don’t care
TAMPER1 input floating	0	0	1	0	0	Don’t care	Don’t care
TIMESTAMP and TAMPER1 input floating	0	0	1	1	0	0	Don’t care
TIMESTAMP input floating	0	0	0	1	Don’t care	0	Don’t care
Standard GPIO	0	0	0	0	Don’t care	Don’t care	Don’t care

1. OD: open drain; PP: push-pull.

Table 38. RTC_AF2 pin

Pin configuration and function	Tamper enabled	Time stamp enabled	TAMP1INSEL TAMPER1 pin selection	TSINSEL TIMESTAMP pin selection	ALARMOUTTYPE RTC_ALARM configuration
TAMPER1 input floating	1	0	1	Don’t care	Don’t care
TIMESTAMP and TAMPER1 input floating	1	1	1	1	Don’t care
TIMESTAMP input floating	0	1	Don’t care	1	Don’t care
Standard GPIO	0	0	Don’t care	Don’t care	Don’t care

8.4 GPIO registers

This section gives a detailed description of the GPIO registers.
For a summary of register bits, register address offsets and reset values, refer to *Table 39*.

The GPIO registers can be accessed by byte (8 bits), half-words (16 bits) or words (32 bits).

8.4.1 GPIO port mode register (GPIOx_MODER) (x = A..I/J/K)

Address offset: 0x00

Reset values:

- 0xA800 0000 for port A
- 0x0000 0280 for port B
- 0x0000 0000 for other ports

31	30	29	28	27	26	25	24	23	22	21	20	19	18	17	16
MODER15[1:0]		MODER14[1:0]		MODER13[1:0]		MODER12[1:0]		MODER11[1:0]		MODER10[1:0]		MODER9[1:0]		MODER8[1:0]	
rw	rw	rw	rw	rw	rw	rw	rw	rw	rw	rw	rw	rw	rw	rw	rw
15	14	13	12	11	10	9	8	7	6	5	4	3	2	1	0
MODER7[1:0]		MODER6[1:0]		MODER5[1:0]		MODER4[1:0]		MODER3[1:0]		MODER2[1:0]		MODER1[1:0]		MODER0[1:0]	
rw	rw	rw	rw	rw	rw	rw	rw	rw	rw	rw	rw	rw	rw	rw	rw

Bits 2y:2y+1 **MODERy[1:0]:** Port x configuration bits (y = 0..15)
These bits are written by software to configure the I/O direction mode.
00: Input (reset state)
01: General purpose output mode
10: Alternate function mode
11: Analog mode

8.4.2 GPIO port output type register (GPIOx_OTYPER) (x = A..I/J/K)

Address offset: 0x04

Reset value: 0x0000 0000

31	30	29	28	27	26	25	24	23	22	21	20	19	18	17	16
Reserved															
15	14	13	12	11	10	9	8	7	6	5	4	3	2	1	0
OT15	OT14	OT13	OT12	OT11	OT10	OT9	OT8	OT7	OT6	OT5	OT4	OT3	OT2	OT1	OT0
rw	rw	rw	rw	rw	rw	rw	rw	rw	rw	rw	rw	rw	rw	rw	rw

Bits 31:16 Reserved, must be kept at reset value.

Bits 15:0 **OTy**: Port x configuration bits (y = 0..15)
These bits are written by software to configure the output type of the I/O port.
0: Output push-pull (reset state)
1: Output open-drain

8.4.3 GPIO port output speed register (GPIOx_OSPEEDR) (x = A..I/J/K)

Address offset: 0x08

Reset values:

- 0x0C00 0000 for port A
- 0x0000 00C0 for port B
- 0x0000 0000 for other ports

31	30	29	28	27	26	25	24	23	22	21	20	19	18	17	16
OSPEEDR15 [1:0]		OSPEEDR14 [1:0]		OSPEEDR13 [1:0]		OSPEEDR12 [1:0]		OSPEEDR11 [1:0]		OSPEEDR10 [1:0]		OSPEEDR9 [1:0]		OSPEEDR8 [1:0]	
rw	rw	rw	rw	rw	rw	rw	rw	rw	rw	rw	rw	rw	rw	rw	rw

15	14	13	12	11	10	9	8	7	6	5	4	3	2	1	0
OSPEEDR7[1:0]		OSPEEDR6[1:0]		OSPEEDR5[1:0]		OSPEEDR4[1:0]		OSPEEDR3[1:0]		OSPEEDR2[1:0]		OSPEEDR1 [1:0]		OSPEEDR0 1:0]	
rw	rw	rw	rw	rw	rw	rw	rw	rw	rw	rw	rw	rw	rw	rw	rw

Bits 2y:2y+1 **OSPEEDRy[1:0]:** Port x configuration bits (y = 0..15)

These bits are written by software to configure the I/O output speed.

00: Low speed
01: Medium speed
10: High speed
11: Very high speed

Note: Refer to the product datasheets for the values of OSPEEDRy bits versus V_{DD} range and external load.

8.4.4 GPIO port pull-up/pull-down register (GPIOx_PUPDR) (x = A..I/J/K)

Address offset: 0x0C

Reset values:

- 0x6400 0000 for port A
- 0x0000 0100 for port B
- 0x0000 0000 for other ports

31	30	29	28	27	26	25	24	23	22	21	20	19	18	17	16
PUPDR15[1:0]		PUPDR14[1:0]		PUPDR13[1:0]		PUPDR12[1:0]		PUPDR11[1:0]		PUPDR10[1:0]		PUPDR9[1:0]		PUPDR8[1:0]	
rw	rw	rw	rw	rw	rw	rw	rw	rw	rw	rw	rw	rw	rw	rw	rw

15	14	13	12	11	10	9	8	7	6	5	4	3	2	1	0
PUPDR7[1:0]		PUPDR6[1:0]		PUPDR5[1:0]		PUPDR4[1:0]		PUPDR3[1:0]		PUPDR2[1:0]		PUPDR1[1:0]		PUPDR0[1:0]	
rw	rw	rw	rw	rw	rw	rw	rw	rw	rw	rw	rw	rw	rw	rw	rw

Bits 2y:2y+1 **PUPDRy[1:0]:** Port x configuration bits (y = 0..15)

These bits are written by software to configure the I/O pull-up or pull-down

00: No pull-up, pull-down
01: Pull-up
10: Pull-down
11: Reserved

8.4.5 GPIO port input data register (GPIOx_IDR) (x = A..I/J/K)

Address offset: 0x10

Reset value: 0x0000 XXXX (where X means undefined)

31	30	29	28	27	26	25	24	23	22	21	20	19	18	17	16
Reserved															
15	14	13	12	11	10	9	8	7	6	5	4	3	2	1	0
IDR15	IDR14	IDR13	IDR12	IDR11	IDR10	IDR9	IDR8	IDR7	IDR6	IDR5	IDR4	IDR3	IDR2	IDR1	IDR0
r	r	r	r	r	r	r	r	r	r	r	r	r	r	r	r

Bits 31:16 Reserved, must be kept at reset value.

Bits 15:0 **IDRy**: Port input data (y = 0..15)

These bits are read-only and can be accessed in word mode only. They contain the input value of the corresponding I/O port.

8.4.6 GPIO port output data register (GPIOx_ODR) (x = A..I/J/K)

Address offset: 0x14

Reset value: 0x0000 0000

31	30	29	28	27	26	25	24	23	22	21	20	19	18	17	16
Reserved															
15	14	13	12	11	10	9	8	7	6	5	4	3	2	1	0
ODR15	ODR14	ODR13	ODR12	ODR11	ODR10	ODR9	ODR8	ODR7	ODR6	ODR5	ODR4	ODR3	ODR2	ODR1	ODR0
rw	rw	rw	rw	rw	rw	rw	rw	rw	rw	rw	rw	rw	rw	rw	rw

Bits 31:16 Reserved, must be kept at reset value.

Bits 15:0 **ODRy**: Port output data (y = 0..15)

These bits can be read and written by software.

Note: For atomic bit set/reset, the ODR bits can be individually set and reset by writing to the GPIOx_BSRR register (x = A..I/J/K).

8.4.7 GPIO port bit set/reset register (GPIOx_BSRR) (x = A..I/J/K)

Address offset: 0x18

Reset value: 0x0000 0000

31	30	29	28	27	26	25	24	23	22	21	20	19	18	17	16
BR15	BR14	BR13	BR12	BR11	BR10	BR9	BR8	BR7	BR6	BR5	BR4	BR3	BR2	BR1	BR0
w	w	w	w	w	w	w	w	w	w	w	w	w	w	w	w
15	14	13	12	11	10	9	8	7	6	5	4	3	2	1	0
BS15	BS14	BS13	BS12	BS11	BS10	BS9	BS8	BS7	BS6	BS5	BS4	BS3	BS2	BS1	BS0
w	w	w	w	w	w	w	w	w	w	w	w	w	w	w	w

Bits 31:16 **BRy:** Port x reset bit y (y = 0..15)

These bits are write-only and can be accessed in word, half-word or byte mode. A read to these bits returns the value 0x0000.

0: No action on the corresponding ODRx bit

1: Resets the corresponding ODRx bit

Note: If both BSx and BRx are set, BSx has priority.

Bits 15:0 **BSy:** Port x set bit y (y= 0..15)

These bits are write-only and can be accessed in word, half-word or byte mode. A read to these bits returns the value 0x0000.

0: No action on the corresponding ODRx bit

1: Sets the corresponding ODRx bit

8.4.8 GPIO port configuration lock register (GPIOx_LCKR) (x = A..I/J/K)

This register is used to lock the configuration of the port bits when a correct write sequence is applied to bit 16 (LCKK). The value of bits [15:0] is used to lock the configuration of the GPIO. During the write sequence, the value of LCKR[15:0] must not change. When the LOCK sequence has been applied on a port bit, the value of this port bit can no longer be modified until the next MCU or peripheral reset.

Note: A specific write sequence is used to write to the GPIOx_LCKR register. Only word access (32-bit long) is allowed during this write sequence.

Each lock bit freezes a specific configuration register (control and alternate function registers).

Address offset: 0x1C

Reset value: 0x0000 0000

Access: 32-bit word only, read/write register

31	30	29	28	27	26	25	24	23	22	21	20	19	18	17	16
Reserved															LCKK
															rw
15	14	13	12	11	10	9	8	7	6	5	4	3	2	1	0
LCK15	LCK14	LCK13	LCK12	LCK11	LCK10	LCK9	LCK8	LCK7	LCK6	LCK5	LCK4	LCK3	LCK2	LCK1	LCK0
rw	rw	rw	rw	rw	rw	rw	rw	rw	rw	rw	rw	rw	rw	rw	rw

Bits 31:17 Reserved, must be kept at reset value.

Bit 16 **LCKK[16]:** Lock key

This bit can be read any time. It can only be modified using the lock key write sequence.
0: Port configuration lock key not active
1: Port configuration lock key active. The GPIOx_LCKR register is locked until an MCU reset or a peripheral reset occurs.

LOCK key write sequence:
WR LCKR[16] = ‘1’ + LCKR[15:0]
WR LCKR[16] = ‘0’ + LCKR[15:0]
WR LCKR[16] = ‘1’ + LCKR[15:0]
RD LCKR
RD LCKR[16] = ‘1’ (this read operation is optional but it confirms that the lock is active)

Note: During the LOCK key write sequence, the value of LCK[15:0] must not change.
Any error in the lock sequence aborts the lock.
After the first lock sequence on any bit of the port, any read access on the LCKK bit will return ‘1’ until the next CPU reset.

Bits 15:0 **LCKy:** Port x lock bit y (y= 0..15)

These bits are read/write but can only be written when the LCKK bit is ‘0.
0: Port configuration not locked
1: Port configuration locked

8.4.9 GPIO alternate function low register (GPIOx_AFRL) (x = A..I/J/K)

Address offset: 0x20

Reset value: 0x0000 0000

31	30	29	28	27	26	25	24	23	22	21	20	19	18	17	16
AFRL7[3:0]				AFRL6[3:0]				AFRL5[3:0]				AFRL4[3:0]			
rw	rw	rw	rw	rw	rw	rw	rw	rw	rw	rw	rw	rw	rw	rw	rw
15	14	13	12	11	10	9	8	7	6	5	4	3	2	1	0
AFRL3[3:0]				AFRL2[3:0]				AFRL1[3:0]				AFRL0[3:0]			
rw	rw	rw	rw	rw	rw	rw	rw	rw	rw	rw	rw	rw	rw	rw	rw

Bits 31:0 **AFRLy:** Alternate function selection for port x bit y (y = 0..7)

These bits are written by software to configure alternate function I/Os

AFRLy selection:

0000: AF0	1000: AF8
0001: AF1	1001: AF9
0010: AF2	1010: AF10
0011: AF3	1011: AF11
0100: AF4	1100: AF12
0101: AF5	1101: AF13
0110: AF6	1110: AF14
0111: AF7	1111: AF15

8.4.10 GPIO alternate function high register (GPIOx_AFRH) (x = A..I/J)

Address offset: 0x24

Reset value: 0x0000 0000

31	30	29	28	27	26	25	24	23	22	21	20	19	18	17	16
AFRH15[3:0]				AFRH14[3:0]				AFRH13[3:0]				AFRH12[3:0]			
rw	rw	rw	rw	rw	rw	rw	rw	rw	rw	rw	rw	rw	rw	rw	rw
15	14	13	12	11	10	9	8	7	6	5	4	3	2	1	0
AFRH11[3:0]				AFRH10[3:0]				AFRH9[3:0]				AFRH8[3:0]			
rw	rw	rw	rw	rw	rw	rw	rw	rw	rw	rw	rw	rw	rw	rw	rw

Bits 31:0 **AFRHy:** Alternate function selection for port x bit y (y = 8..15)

These bits are written by software to configure alternate function I/Os

AFRHy selection:

0000: AF0	1000: AF8
0001: AF1	1001: AF9
0010: AF2	1010: AF10
0011: AF3	1011: AF11
0100: AF4	1100: AF12
0101: AF5	1101: AF13
0110: AF6	1110: AF14
0111: AF7	1111: AF15

8.4.11 GPIO register map

The following table gives the GPIO register map and the reset values.

Table 39. GPIO register map and reset values

Offset	Register	31	30	29	28	27	26	25	24	23	22	21	20	19	18	17	16	15	14	13	12	11	10	9	8	7	6	5	4	3	2	1	0
0x00	**GPIOA_ MODER**	MODER15[1:0]		MODER14[1:0]		MODER13[1:0]		MODER12[1:0]		MODER11[1:0]		MODER10[1:0]		MODER9[1:0]		MODER8[1:0]		MODER7[1:0]		MODER6[1:0]		MODER5[1:0]		MODER4[1:0]		MODER3[1:0]		MODER2[1:0]		MODER1[1:0]		MODER0[1:0]	
	Reset value	1	0	1	0	1	0	0	0	0	0	0	0	0	0	0	0	0	0	0	0	0	0	0	0	0	0	0	0	0	0	0	0
0x00	**GPIOB_ MODER**	MODER15[1:0]		MODER14[1:0]		MODER13[1:0]		MODER12[1:0]		MODER11[1:0]		MODER10[1:0]		MODER9[1:0]		MODER8[1:0]		MODER7[1:0]		MODER6[1:0]		MODER5[1:0]		MODER4[1:0]		MODER3[1:0]		MODER2[1:0]		MODER1[1:0]		MODER0[1:0]	
	Reset value	0	0	0	0	0	0	0	0	0	0	0	0	0	0	0	0	0	0	0	0	0	0	1	0	1	0	0	0	0	0	0	0
0x00	**GPIOx_MODER** (where x = C..I/J/K)	MODER15[1:0]		MODER14[1:0]		MODER13[1:0]		MODER12[1:0]		MODER11[1:0]		MODER10[1:0]		MODER9[1:0]		MODER8[1:0]		MODER7[1:0]		MODER6[1:0]		MODER5[1:0]		MODER4[1:0]		MODER3[1:0]		MODER2[1:0]		MODER1[1:0]		MODER0[1:0]	
	Reset value	0	0	0	0	0	0	0	0	0	0	0	0	0	0	0	0	0	0	0	0	0	0	0	0	0	0	0	0	0	0	0	0
0x04	**GPIOx_ OTYPER** (where x = A..I/J/K)	Reserved																OT15	OT14	OT13	OT12	OT11	OT10	OT9	OT8	OT7	OT6	OT5	OT4	OT3	OT2	OT1	OT0
	Reset value																	0	0	0	0	0	0	0	0	0	0	0	0	0	0	0	0
0x08	**GPIOx_ OSPEEDR** (where x = A..I/J/K except B)	OSPEEDR15[1:0]		OSPEEDR14[1:0]		OSPEEDR13[1:0]		OSPEEDR12[1:0]		OSPEEDR11[1:0]		OSPEEDR10[1:0]		OSPEEDR9[1:0]		OSPEEDR8[1:0]		OSPEEDR7[1:0]		OSPEEDR6[1:0]		OSPEEDR5[1:0]		OSPEEDR4[1:0]		OSPEEDR3[1:0]		OSPEEDR2[1:0]		OSPEEDR1[1:0]		OSPEEDR0[1:0]	
	Reset value	0	0	0	0	0	0	0	0	0	0	0	0	0	0	0	0	0	0	0	0	0	0	0	0	0	0	0	0	0	0	0	0
0x08	**GPIOB_ OSPEEDR**	OSPEEDR15[1:0]		OSPEEDR14[1:0]		OSPEEDR13[1:0]		OSPEEDR12[1:0]		OSPEEDR11[1:0]		OSPEEDR10[1:0]		OSPEEDR9[1:0]		OSPEEDR8[1:0]		OSPEEDR7[1:0]		OSPEEDR6[1:0]		OSPEEDR5[1:0]		OSPEEDR4[1:0]		OSPEEDR3[1:0]		OSPEEDR2[1:0]		OSPEEDR1[1:0]		OSPEEDR0[1:0]	
	Reset value	0	0	0	0	0	0	0	0	0	0	0	0	0	0	0	0	0	0	0	0	0	0	0	0	1	1	0	0	0	0	0	0
0x0C	**GPIOA_PUPDR**	PUPDR15[1:0]		PUPDR14[1:0]		PUPDR13[1:0]		PUPDR12[1:0]		PUPDR11[1:0]		PUPDR10[1:0]		PUPDR9[1:0]		PUPDR8[1:0]		PUPDR7[1:0]		PUPDR6[1:0]		PUPDR5[1:0]		PUPDR4[1:0]		PUPDR3[1:0]		PUPDR2[1:0]		PUPDR1[1:0]		PUPDR0[1:0]	
	Reset value	0	1	1	0	0	1	0	0	0	0	0	0	0	0	0	0	0	0	0	0	0	0	0	0	0	0	0	0	0	0	0	0
0x0C	**GPIOB_PUPDR**	PUPDR15[1:0]		PUPDR14[1:0]		PUPDR13[1:0]		PUPDR12[1:0]		PUPDR11[1:0]		PUPDR10[1:0]		PUPDR9[1:0]		PUPDR8[1:0]		PUPDR7[1:0]		PUPDR6[1:0]		PUPDR5[1:0]		PUPDR4[1:0]		PUPDR3[1:0]		PUPDR2[1:0]		PUPDR1[1:0]		PUPDR0[1:0]	
	Reset value	0	0	0	0	0	0	0	0	0	0	0	0	0	0	0	0	0	0	0	0	0	0	0	1	0	0	0	0	0	0	0	0

Table 39. GPIO register map and reset values (continued)

Offset	Register	31	30	29	28	27	26	25	24	23	22	21	20	19	18	17	16	15	14	13	12	11	10	9	8	7	6	5	4	3	2	1	0
0x0C	**GPIOx_PUPDR** (where x = C..I/J/K)	PUPDR15[1:0]		PUPDR14[1:0]		PUPDR13[1:0]		PUPDR12[1:0]		PUPDR11[1:0]		PUPDR10[1:0]		PUPDR9[1:0]		PUPDR8[1:0]		PUPDR7[1:0]		PUPDR6[1:0]		PUPDR5[1:0]		PUPDR4[1:0]		PUPDR3[1:0]		PUPDR2[1:0]		PUPDR1[1:0]		PUPDR0[1:0]	
	Reset value	0	0	0	0	0	0	0	0	0	0	0	0	0	0	0	0	0	0	0	0	0	0	0	0	0	0	0	0	0	0	0	0
0x10	**GPIOx_IDR** (where x = A..I/J/K)	Reserved																IDR15	IDR14	IDR13	IDR12	IDR11	IDR10	IDR9	IDR8	IDR7	IDR6	IDR5	IDR4	IDR3	IDR2	IDR1	IDR0
	Reset value																	x	x	x	x	x	x	x	x	x	x	x	x	x	x	x	x
0x14	**GPIOx_ODR** (where x = A..I/J/K)	Reserved																ODR15	ODR14	ODR13	ODR12	ODR11	ODR10	ODR9	ODR8	ODR7	ODR6	ODR5	ODR4	ODR3	ODR2	ODR1	ODR0
	Reset value																	0	0	0	0	0	0	0	0	0	0	0	0	0	0	0	0
0x18	**GPIOx_BSRR** (where x = A..I/J/K)	BR15	BR14	BR13	BR12	BR11	BR10	BR9	BR8	BR7	BR6	BR5	BR4	BR3	BR2	BR1	BR0	BS15	BS14	BS13	BS12	BS11	BS10	BS9	BS8	BS7	BS6	BS5	BS4	BS3	BS2	BS1	BS0
	Reset value	0	0	0	0	0	0	0	0	0	0	0	0	0	0	0	0	0	0	0	0	0	0	0	0	0	0	0	0	0	0	0	0
0x1C	**GPIOx_LCKR** (where x = A..I/J/K)	Reserved															LCKK	LCK15	LCK14	LCK13	LCK12	LCK11	LCK10	LCK9	LCK8	LCK7	LCK6	LCK5	LCK4	LCK3	LCK2	LCK1	LCK0
	Reset value																0	0	0	0	0	0	0	0	0	0	0	0	0	0	0	0	0
0x20	**GPIOx_AFRL** (where x = A..I/J/K)	AFRL7[3:0]				AFRL6[3:0]				AFRL5[3:0]				AFRL4[3:0]				AFRL3[3:0]				AFRL2[3:0]				AFRL1[3:0]				AFRL0[3:0]			
	Reset value	0	0	0	0	0	0	0	0	0	0	0	0	0	0	0	0	0	0	0	0	0	0	0	0	0	0	0	0	0	0	0	0
0x24	**GPIOx_AFRH** (where x = A..I/J)	AFRH15[3:0]				AFRH14[3:0]				AFRH13[3:0]				AFRH12[3:0]				AFRH11[3:0]				AFRH10[3:0]				AFRH9[3:0]				AFRH8[3:0]			
	Reset value	0	0	0	0	0	0	0	0	0	0	0	0	0	0	0	0	0	0	0	0	0	0	0	0	0	0	0	0	0	0	0	0

Refer to *Section 2.3: Memory map* for the register boundary addresses.

9 System configuration controller (SYSCFG)

The system configuration controller is mainly used to remap the memory accessible in the code area, select the Ethernet PHY interface and manage the external interrupt line connection to the GPIOs.

This section applies to the whole STM32F4xx family, unless otherwise specified.

9.1 I/O compensation cell

By default the I/O compensation cell is not used. However when the I/O output buffer speed is configured in 50 MHz or 100 MHz mode, it is recommended to use the compensation cell for slew rate control on I/O $t_{f(IO)out}$)/$t_{r(IO)out}$ commutation to reduce the I/O noise on power supply.

When the compensation cell is enabled, a READY flag is set to indicate that the compensation cell is ready and can be used. The I/O compensation cell can be used only when the supply voltage ranges from 2.4 to 3.6 V.

9.2 SYSCFG registers for STM32F405xx/07xx and STM32F415xx/17xx

9.2.1 SYSCFG memory remap register (SYSCFG_MEMRMP)

This register is used for specific configurations on memory remap:

- Two bits are used to configure the type of memory accessible at address 0x0000 0000. These bits are used to select the physical remap by software and so, bypass the BOOT pins.
- After reset these bits take the value selected by the BOOT pins. When booting from main Flash memory with BOOT pins set to 10 [(BOOT1,BOOT0) = (1,0)] this register takes the value 0x00.

When the FSMC is remapped at address 0x0000 0000, only the first two regions of Bank 1 memory controller (Bank1 NOR/PSRAM 1 and NOR/PSRAM 2) can be remapped. In remap mode, the CPU can access the external memory via ICode bus instead of System bus which boosts up the performance.

Address offset: 0x00

Reset value: 0x0000 000X (X is the memory mode selected by the BOOT pins)

31	30	29	28	27	26	25	24	23	22	21	20	19	18	17	16
Reserved															
15	14	13	12	11	10	9	8	7	6	5	4	3	2	1	0
Reserved														MEM_MODE	
														rw	rw

Bits 31:2 Reserved, must be kept at reset value.

Bits 1:0 **MEM_MODE:** Memory mapping selection

Set and cleared by software. This bit controls the memory internal mapping at address 0x0000 0000. After reset these bits take the value selected by the Boot pins (except for FSMC).

00: Main Flash memory mapped at 0x0000 0000
01: System Flash memory mapped at 0x0000 0000
10: FSMC Bank1 (NOR/PSRAM 1 and 2) mapped at 0x0000 0000
11: Embedded SRAM (SRAM1) mapped at 0x0000 0000

Note: Refer to Section 2.3: Memory map for details about the memory mapping at address 0x0000 0000.

9.2.2 SYSCFG peripheral mode configuration register (SYSCFG_PMC)

Address offset: 0x04

Reset value: 0x0000 0000

31	30	29	28	27	26	25	24	23	22	21	20	19	18	17	16
Reserved								MII_RMII_SEL	Reserved						
								rw							
15	14	13	12	11	10	9	8	7	6	5	4	3	2	1	0
Reserved															

Bits 31:24 Reserved, must be kept at reset value.

Bit 23 **MII_RMII_SEL:** Ethernet PHY interface selection

Set and Cleared by software.These bits control the PHY interface for the Ethernet MAC.

0: MII interface is selected
1: RMII PHY interface is selected

Note: This configuration must be done while the MAC is under reset and before enabling the MAC clocks.

Bits 22:0 Reserved, must be kept at reset value.

9.2.3 SYSCFG external interrupt configuration register 1 (SYSCFG_EXTICR1)

Address offset: 0x08

Reset value: 0x0000 0000

31	30	29	28	27	26	25	24	23	22	21	20	19	18	17	16
Reserved															
15	14	13	12	11	10	9	8	7	6	5	4	3	2	1	0
EXTI3[3:0]				EXTI2[3:0]				EXTI1[3:0]				EXTI0[3:0]			
rw	rw	rw	rw	rw	rw	rw	rw	rw	rw	rw	rw	rw	rw	rw	rw

Bits 31:16 Reserved, must be kept at reset value.

Bits 15:0 **EXTIx[3:0]**: EXTI x configuration (x = 0 to 3)

These bits are written by software to select the source input for the EXTIx external interrupt.

0000: PA[x] pin
0001: PB[x] pin
0010: PC[x] pin
0011: PD[x] pin
0100: PE[x] pin
0101: PF[x] pin
0110: PG[x] pin
0111: PH[x] pin
1000: PI[x] pin

9.2.4 SYSCFG external interrupt configuration register 2 (SYSCFG_EXTICR2)

Address offset: 0x0C

Reset value: 0x0000 0000

31	30	29	28	27	26	25	24	23	22	21	20	19	18	17	16
Reserved															
15	14	13	12	11	10	9	8	7	6	5	4	3	2	1	0
EXTI7[3:0]				EXTI6[3:0]				EXTI5[3:0]				EXTI4[3:0]			
rw	rw	rw	rw	rw	rw	rw	rw	rw	rw	rw	rw	rw	rw	rw	rw

Bits 31:16 Reserved, must be kept at reset value.

Bits 15:0 **EXTIx[3:0]**: EXTI x configuration (x = 4 to 7)

These bits are written by software to select the source input for the EXTIx external interrupt.
0000: PA[x] pin
0001: PB[x] pin
0010: PC[x] pin
0011: PD[x] pin
0100: PE[x] pin
0101: PF[x] pin
0110: PG[x] pin
0111: PH[x] pin
1000: PI[x] pin

9.2.5 SYSCFG external interrupt configuration register 3 (SYSCFG_EXTICR3)

Address offset: 0x10

Reset value: 0x0000 0000

31	30	29	28	27	26	25	24	23	22	21	20	19	18	17	16
Reserved															
15	14	13	12	11	10	9	8	7	6	5	4	3	2	1	0
EXTI11[3:0]				EXTI10[3:0]				EXTI9[3:0]				EXTI8[3:0]			
rw	rw	rw	rw	rw	rw	rw	rw	rw	rw	rw	rw	rw	rw	rw	rw

Bits 31:16 Reserved, must be kept at reset value.

Bits 15:0 **EXTIx[3:0]**: EXTI x configuration (x = 8 to 11)

These bits are written by software to select the source input for the EXTIx external interrupt.
0000: PA[x] pin
0001: PB[x] pin
0010: PC[x] pin
0011: PD[x] pin
0100: PE[x] pin
0101: PF[x] pin
0110: PG[x] pin
0111: PH[x] pin
1000: PI[x] pin

9.2.6 SYSCFG external interrupt configuration register 4 (SYSCFG_EXTICR4)

Address offset: 0x14

Reset value: 0x0000 0000

31	30	29	28	27	26	25	24	23	22	21	20	19	18	17	16
Reserved															
15	14	13	12	11	10	9	8	7	6	5	4	3	2	1	0
EXTI15[3:0]				EXTI14[3:0]				EXTI13[3:0]				EXTI12[3:0]			
rw	rw	rw	rw	rw	rw	rw	rw	rw	rw	rw	rw	rw	rw	rw	rw

Bits 31:16 Reserved, must be kept at reset value.

Bits 15:0 **EXTIx[3:0]**: EXTI x configuration (x = 12 to 15)

These bits are written by software to select the source input for the EXTIx external interrupt.

0000: PA[x] pin
0001: PB[x] pin
0010: PC[x] pin
0011: PD[x] pin
0100: PE[x] pin
0101: PF[x] pin
0110: PG[x] pin
0111: PH[x] pin

Note: PI[15:12] are not used.

9.2.7 Compensation cell control register (SYSCFG_CMPCR)

Address offset: 0x20

Reset value: 0x0000 0000

31	30	29	28	27	26	25	24	23	22	21	20	19	18	17	16
Reserved															
15	14	13	12	11	10	9	8	7	6	5	4	3	2	1	0
Reserved							READY	Reserved							CMP_PD
							r								rw

Bits 31:9 Reserved, must be kept at reset value.

Bit 8 **READY:** Compensation cell ready flag

0: I/O compensation cell not ready
1: O compensation cell ready

Bits 7:2 Reserved, must be kept at reset value.

Bit 0 **CMP_PD:** Compensation cell power-down

0: I/O compensation cell power-down mode
1: I/O compensation cell enabled

9.2.8 SYSCFG register maps for STM32F405xx/07xx and STM32F415xx/17xx

The following table gives the SYSCFG register map and the reset values.

Table 40. SYSCFG register map and reset values (STM32F405xx/07xx and STM32F415xx/17xx)

Offset	Register	31	30	29	28	27	26	25	24	23	22	21	20	19	18	17	16	15	14	13	12	11	10	9	8	7	6	5	4	3	2	1	0
0x00	SYSCFG_MEMRMP	Reserved																														MEM_MODE	
	Reset value																															x	x
0x04	SYSCFG_PMC	Reserved								MII_RMII_SEL	Reserved							Reserved															
	Reset value									0																							
0x08	SYSCFG_EXTICR1	Reserved																EXTI3[3:0]				EXTI2[3:0]				EXTI1[3:0]				EXTI0[3:0]			
	Reset value																	0	0	0	0	0	0	0	0	0	0	0	0	0	0	0	0
0x0C	SYSCFG_EXTICR2	Reserved																EXTI7[3:0]				EXTI6[3:0]				EXTI5[3:0]				EXTI4[3:0]			
	Reset value																	0	0	0	0	0	0	0	0	0	0	0	0	0	0	0	0
0x10	SYSCFG_EXTICR3	Reserved																EXTI11[3:0]				EXTI10[3:0]				EXTI9[3:0]				EXTI8[3:0]			
	Reset value																	0	0	0	0	0	0	0	0	0	0	0	0	0	0	0	0
0x14	SYSCFG_EXTICR4	Reserved																EXTI15[3:0]				EXTI14[3:0]				EXTI13[3:0]				EXTI12[3:0]			
	Reset value																	0	0	0	0	0	0	0	0	0	0	0	0	0	0	0	0
0x20	SYSCFG_CMPCR	Reserved																								READY	Reserved						CMP_PD
	Reset value																									0							0

Refer to *Section 2.3: Memory map* for the register boundary addresses.

9.3 SYSCFG registers for STM32F42xxx and STM32F43xxx

9.3.1 SYSCFG memory remap register (SYSCFG_MEMRMP)

This register is used for specific configurations on memory remap:

- Three bits are used to configure the type of memory accessible at address 0x0000 0000. These bits are used to select the physical remap by software and so, bypass the BOOT pins.
- After reset these bits take the value selected by the BOOT pins. When booting from main Flash memory with BOOT pins set to 10 [(BOOT1,BOOT0) = (1,0)] this register takes the value 0x00.
- Other bits are used to swap FMC SDRAM Bank 1/2 with FMC Bank 3/4 and configure the Flash Bank 1/2 mapping

There are two possible FMC remap at address 0x0000 0000:

- FMC Bank 1 (NOR/PSRAM 1 and 2) remap:

  Only the first two regions of Bank 1 memory controller (Bank1 NOR/PSRAM 1 and NOR/PSRAM 2) can be remapped.
- FMC SDRAM Bank 1 remap.

In remap mode at address 0x0000 0000, the CPU can access the external memory via ICode bus instead of System bus which boosts up the performance.

Address offset: 0x00

Reset value: 0x0000 000X (X is the memory mode selected by the BOOT pins)

Note: Booting from NOR Flash memory or SDRAM is not allowed. The regions can only be mapped at 0x0000 0000 through software remap.

31	30	29	28	27	26	25	24	23	22	21	20	19	18	17	16
Reserved															
15	14	13	12	11	10	9	8	7	6	5	4	3	2	1	0
Reserved				SWP_FMC		Res.	FB_ MODE	Reserved					MEM_MODE[2:0]		
				rw	rw		rw						rw	rw	rw

Bits 31:12 Reserved, must be kept at reset value.

Bits 11:10 **SWP_FMC**: FMC memory mapping swap

Set and cleared by software. These bits are used to swap the FMC SDRAM Bank 1/2 and FMC Bank 3/4 (SDRAM Bank 1/2 and NAND Bank 2/PCCARD Bank) in order to enable the code execution from SDRAM Banks without a physical remapping at 0x0000 0000 address.

00: No FMC memory mapping swap

01: SDRAM banks and NAND Bank 2/PCCARD mapping are swapped. SDRAM Bank 1 and 2 are mapped at NAND Bank 2 (0x8000 0000) and PCCARD Bank (0x9000 0000) address, respectively. NAND Bank 2 and PCCARD Bank are mapped at 0xC000 0000 and 0xD000 0000, respectively.

10: Reserved

11: Reserved

Bit 9 Reserved, must be kept at reset value.

Bit 8 **FB_MODE**: Flash Bank mode selection

Set and cleared by software. This bit controls the Flash Bank 1/2 mapping.

0: Flash Bank 1 is mapped at 0x0800 0000 (and aliased at 0x0000 0000) and Flash Bank 2 is mapped at 0x0810 0000 (and aliased at 0x0010 0000)

1: Flash Bank 2 is mapped at 0x0800 0000 (and aliased at 0x0000 0000) and Flash Bank 1 is mapped at 0x0810 0000 (and aliased at 0x0010 0000)

Bits 7:3 Reserved, must be kept at reset value.

Bits 2:0 **MEM_MODE:** Memory mapping selection

Set and cleared by software. This bit controls the memory internal mapping at address 0x0000 0000. After reset these bits take the value selected by the Boot pins (except for FMC).

000: Main Flash memory mapped at 0x0000 0000

001: System Flash memory mapped at 0x0000 0000

010: FMC Bank1 (NOR/PSRAM 1 and 2) mapped at 0x0000 0000

011: Embedded SRAM (SRAM1) mapped at 0x0000 0000

100: FMC/SDRAM Bank 1 mapped at 0x0000 0000

Other configurations are reserved

Note: Refer to Section 2.3: Memory map for details about the memory mapping at address 0x0000 0000.

9.3.2 SYSCFG peripheral mode configuration register (SYSCFG_PMC)

Address offset: 0x04

Reset value: 0x0000 0000

31	30	29	28	27	26	25	24	23	22	21	20	19	18	17	16
Reserved								MII_RMII_SEL	Reserved				ADCxDC2		
								rw					rw	rw	rw
15	14	13	12	11	10	9	8	7	6	5	4	3	2	1	0
Reserved															

Bits 31:24 Reserved, must be kept at reset value.

Bit 23 **MII_RMII_SEL:** Ethernet PHY interface selection

Set and Cleared by software.These bits control the PHY interface for the Ethernet MAC.

0: MII interface is selected

1: RMII PHY interface is selected

Note: This configuration must be done while the MAC is under reset and before enabling the MAC clocks.

Bits 22:19 Reserved, must be kept at reset value.

Bits 18:16 **ADCxDC2**:

0: No effect.

1: Refer to AN4073 on how to use this bit.

Note: These bits can be set only if the following conditions are met:

- ADC clock higher or equal to 30 MHz.

- Only one ADCxDC2 bit must be selected if ADC conversions do not start at the same time and the sampling times differ.

- These bits must not be set when the ADCDC1 bit is set in PWR_CR register.

Bits 15:0 Reserved, must be kept at reset value.

9.3.3 SYSCFG external interrupt configuration register 1 (SYSCFG_EXTICR1)

Address offset: 0x08

Reset value: 0x0000 0000

31	30	29	28	27	26	25	24	23	22	21	20	19	18	17	16
Reserved															
15	14	13	12	11	10	9	8	7	6	5	4	3	2	1	0
EXTI3[3:0]				EXTI2[3:0]				EXTI1[3:0]				EXTI0[3:0]			
rw	rw	rw	rw	rw	rw	rw	rw	rw	rw	rw	rw	rw	rw	rw	rw

Bits 31:16 Reserved, must be kept at reset value.

Bits 15:0 **EXTIx[3:0]**: EXTI x configuration (x = 0 to 3)

These bits are written by software to select the source input for the EXTIx external interrupt.

0000: PA[x] pin
0001: PB[x] pin
0010: PC[x] pin
0011: PD[x] pin
0100: PE[x] pin
0101: PF[x] pin
0110: PG[x] pin
0111: PH[x] pin
1000: PI[x] pin
1001: PJ[x] pin
1010: PK[x] pin

9.3.4 SYSCFG external interrupt configuration register 2 (SYSCFG_EXTICR2)

Address offset: 0x0C

Reset value: 0x0000 0000

31	30	29	28	27	26	25	24	23	22	21	20	19	18	17	16
Reserved															
15	14	13	12	11	10	9	8	7	6	5	4	3	2	1	0
EXTI7[3:0]				EXTI6[3:0]				EXTI5[3:0]				EXTI4[3:0]			
rw	rw	rw	rw	rw	rw	rw	rw	rw	rw	rw	rw	rw	rw	rw	rw

Bits 31:16 Reserved, must be kept at reset value.

Bits 15:0 **EXTIx[3:0]**: EXTI x configuration (x = 4 to 7)

These bits are written by software to select the source input for the EXTIx external interrupt.

0000: PA[x] pin
0001: PB[x] pin
0010: PC[x] pin
0011: PD[x] pin
0100: PE[x] pin
0101: PF[x] pin
0110: PG[x] pin
0111: PH[x] pin
1000: PI[x] pin
1001: PJ[x] pin
1010: PK[x] pin

9.3.5 SYSCFG external interrupt configuration register 3 (SYSCFG_EXTICR3)

Address offset: 0x10

Reset value: 0x0000 0000

31	30	29	28	27	26	25	24	23	22	21	20	19	18	17	16
Reserved															
15	14	13	12	11	10	9	8	7	6	5	4	3	2	1	0
EXTI11[3:0]				EXTI10[3:0]				EXTI9[3:0]				EXTI8[3:0]			
rw	rw	rw	rw	rw	rw	rw	rw	rw	rw	rw	rw	rw	rw	rw	rw

Bits 31:16 Reserved, must be kept at reset value.

Bits 15:0 **EXTIx[3:0]**: EXTI x configuration (x = 8 to 11)

These bits are written by software to select the source input for the EXTIx external interrupt.

0000: PA[x] pin
0001: PB[x] pin
0010: PC[x] pin
0011: PD[x] pin
0100: PE[x] pin
0101: PF[x] pin
0110: PG[x] pin
0111: PH[x] pin
1000: PI[x] pin
1001: PJ[x] pin

Note: PK[11:8] are not used.

9.3.6 SYSCFG external interrupt configuration register 4 (SYSCFG_EXTICR4)

Address offset: 0x14

Reset value: 0x0000 0000

31	30	29	28	27	26	25	24	23	22	21	20	19	18	17	16
Reserved															
15	14	13	12	11	10	9	8	7	6	5	4	3	2	1	0
EXTI15[3:0]				EXTI14[3:0]				EXTI13[3:0]				EXTI12[3:0]			
rw	rw	rw	rw	rw	rw	rw	rw	rw	rw	rw	rw	rw	rw	rw	rw

Bits 31:16 Reserved, must be kept at reset value.

Bits 15:0 **EXTIx[3:0]**: EXTI x configuration (x = 12 to 15)

These bits are written by software to select the source input for the EXTIx external interrupt.

0000: PA[x] pin
0001: PB[x] pin
0010: PC[x] pin
0011: PD[x] pin
0100: PE[x] pin
0101: PF[x] pin
0110: PG[x] pin
0111: PH[x] pin
1000: PI[x] pin
1001: PJ[x] pin

Note: PK[15:12] are not used.

9.3.7 Compensation cell control register (SYSCFG_CMPCR)

Address offset: 0x20

Reset value: 0x0000 0000

31	30	29	28	27	26	25	24	23	22	21	20	19	18	17	16
Reserved															
15	14	13	12	11	10	9	8	7	6	5	4	3	2	1	0
Reserved							READY	Reserved							CMP_PD
							r								rw

Bits 31:9 Reserved, must be kept at reset value.

Bit 8 **READY:** Compensation cell ready flag

0: I/O compensation cell not ready
1: O compensation cell ready

Bits 7:2 Reserved, must be kept at reset value.

Bit 0 **CMP_PD:** Compensation cell power-down

0: I/O compensation cell power-down mode
1: I/O compensation cell enabled

9.3.8 SYSCFG register maps for STM32F42xxx and STM32F43xxx

The following table gives the SYSCFG register map and the reset values.

Table 41. SYSCFG register map and reset values (STM32F42xxx and STM32F43xxx)

Offset	Register	31	30	29	28	27	26	25	24	23	22	21	20	19	18	17	16	15	14	13	12	11	10	9	8	7	6	5	4	3	2	1	0
0x00	SYSCFG_ MEMRMP	Reserved																				SWP_FMC		Reserved	FB_MODE	Reserved					MEM_ MODE		
	Reset value																					0	0		0						x	x	x
0x04	SYSCFG_PMC	Reserved								MII_RMII_SEL	Reserved				ADC3DC2	ADC2DC2	ADC1DC2	Reserved															
	Reset value									0					0	0	0																
0x08	SYSCFG_EXTICR1	Reserved																EXTI3[3:0]				EXTI2[3:0]				EXTI1[3:0]				EXTI0[3:0]			
	Reset value																	0	0	0	0	0	0	0	0	0	0	0	0	0	0	0	0
0x0C	SYSCFG_EXTICR2	Reserved																EXTI7[3:0]				EXTI6[3:0]				EXTI5[3:0]				EXTI4[3:0]			
	Reset value																	0	0	0	0	0	0	0	0	0	0	0	0	0	0	0	0
0x10	SYSCFG_EXTICR3	Reserved																EXTI11[3:0]				EXTI10[3:0]				EXTI9[3:0]				EXTI8[3:0]			
	Reset value																	0	0	0	0	0	0	0	0	0	0	0	0	0	0	0	0
0x14	SYSCFG_EXTICR4	Reserved																EXTI15[3:0]				EXTI14[3:0]				EXTI13[3:0]				EXTI12[3:0]			
	Reset value																	0	0	0	0	0	0	0	0	0	0	0	0	0	0	0	0
0x20	SYSCFG_CMPCR	Reserved																								READY	Reserved						CMP_PD
	Reset value																									0							0

Refer to *Section 2.3: Memory map* for the register boundary addresses.

10 DMA controller (DMA)

This section applies to the whole STM32F4xx family, unless otherwise specified.

10.1 DMA introduction

Direct memory access (DMA) is used in order to provide high-speed data transfer between peripherals and memory and between memory and memory. Data can be quickly moved by DMA without any CPU action. This keeps CPU resources free for other operations.

The DMA controller combines a powerful dual AHB master bus architecture with independent FIFO to optimize the bandwidth of the system, based on a complex bus matrix architecture.

The two DMA controllers have 16 streams in total (8 for each controller), each dedicated to managing memory access requests from one or more peripherals. Each stream can have up to 8 channels (requests) in total. And each has an arbiter for handling the priority between DMA requests.

10.2 DMA main features

The main DMA features are:

- Dual AHB master bus architecture, one dedicated to memory accesses and one dedicated to peripheral accesses
- AHB slave programming interface supporting only 32-bit accesses
- 8 streams for each DMA controller, up to 8 channels (requests) per stream
- Four-word depth 32 first-in, first-out memory buffers (FIFOs) per stream, that can be used in FIFO mode or direct mode:
  - FIFO mode: with threshold level software selectable between 1/4, 1/2 or 3/4 of the FIFO size
  - Direct mode

    Each DMA request immediately initiates a transfer from/to the memory. When it is configured in direct mode (FIFO disabled), to transfer data in memory-to-peripheral mode, the DMA preloads only one data from the memory to the internal

FIFO to ensure an immediate data transfer as soon as a DMA request is triggered by a peripheral.

- Each stream can be configured by hardware to be:
  - a regular channel that supports peripheral-to-memory, memory-to-peripheral and memory-to-memory transfers
  - a double buffer channel that also supports double buffering on the memory side
- Each of the 8 streams are connected to dedicated hardware DMA channels (requests)
- Priorities between DMA stream requests are software-programmable (4 levels consisting of very high, high, medium, low) or hardware in case of equality (request 0 has priority over request 1, etc.)
- Each stream also supports software trigger for memory-to-memory transfers (only available for the DMA2 controller)
- Each stream request can be selected among up to 8 possible channel requests. This selection is software-configurable and allows several peripherals to initiate DMA requests
- The number of data items to be transferred can be managed either by the DMA controller or by the peripheral:
  - DMA flow controller: the number of data items to be transferred is software-programmable from 1 to 65535
  - Peripheral flow controller: the number of data items to be transferred is unknown and controlled by the source or the destination peripheral that signals the end of the transfer by hardware
- Independent source and destination transfer width (byte, half-word, word): when the data widths of the source and destination are not equal, the DMA automatically packs/unpacks the necessary transfers to optimize the bandwidth. This feature is only available in FIFO mode
- Incrementing or non-incrementing addressing for source and destination
- Supports incremental burst transfers of 4, 8 or 16 beats. The size of the burst is software-configurable, usually equal to half the FIFO size of the peripheral
- Each stream supports circular buffer management
- 5 event flags (DMA Half Transfer, DMA Transfer complete, DMA Transfer Error, DMA FIFO Error, Direct Mode Error) logically ORed together in a single interrupt request for each stream

10.3 DMA functional description

10.3.1 General description

Figure 32 shows the block diagram of a DMA.

Figure 32. DMA block diagram

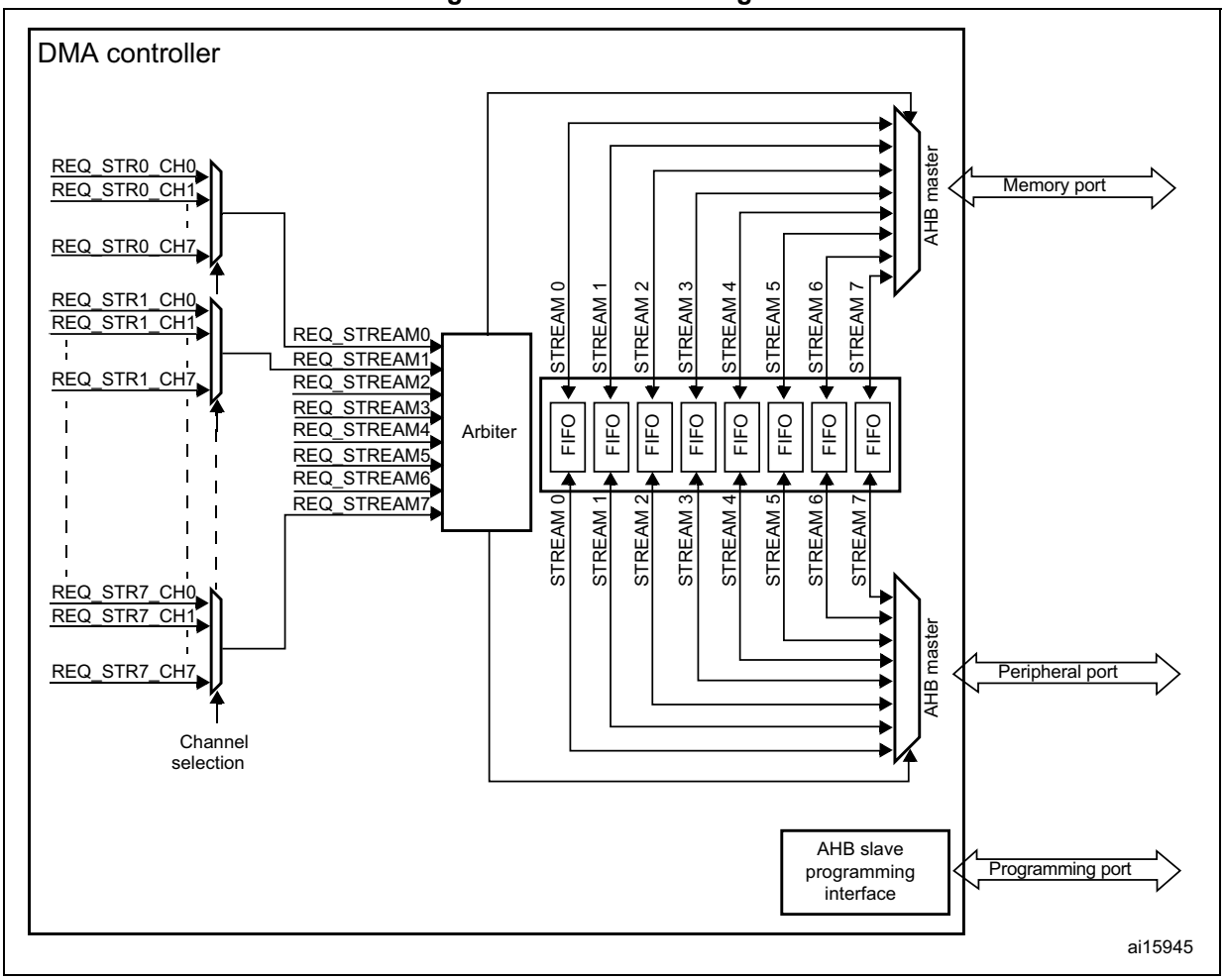

The DMA controller performs direct memory transfer: as an AHB master, it can take the control of the AHB bus matrix to initiate AHB transactions.

It can carry out the following transactions:

- peripheral-to-memory
- memory-to-peripheral
- memory-to-memory

The DMA controller provides two AHB master ports: the *AHB memory port*, intended to be connected to memories and the *AHB peripheral port*, intended to be connected to peripherals. However, to allow memory-to-memory transfers, the *AHB peripheral port* must also have access to the memories.

The AHB slave port is used to program the DMA controller (it supports only 32-bit accesses).

See *Figure 33* and *Figure 34* for the implementation of the system of two DMA controllers.

Figure 33. System implementation of the two DMA controllers (STM32F405xx/07xx and STM32F415xx/17xx)

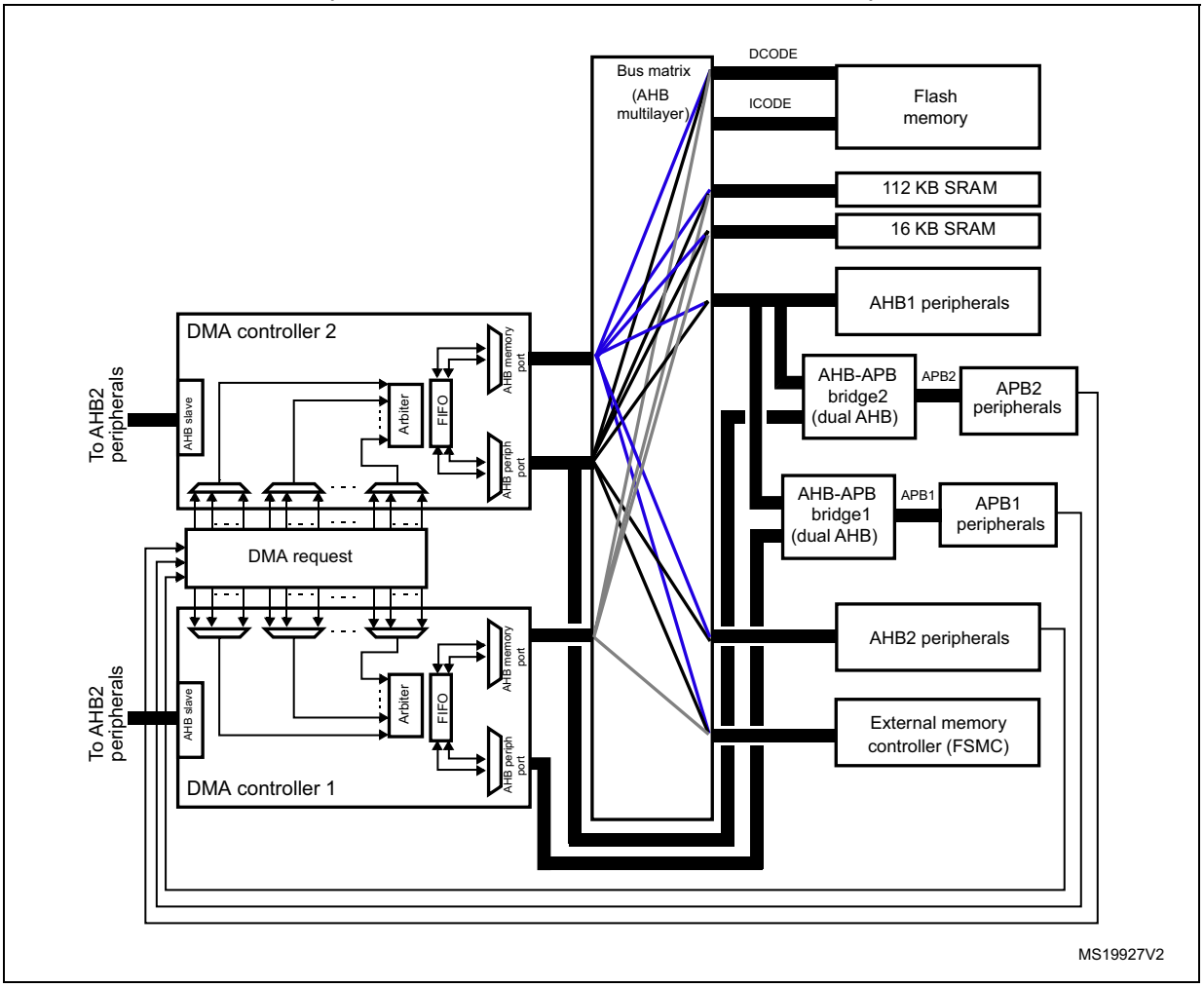

1. The DMA1 controller AHB peripheral port is not connected to the bus matrix like DMA2 controller. As a result, only DMA2 streams are able to perform memory-to-memory transfers.

Figure 34. System implementation of the two DMA controllers (STM32F42xxx and STM32F43xxx)

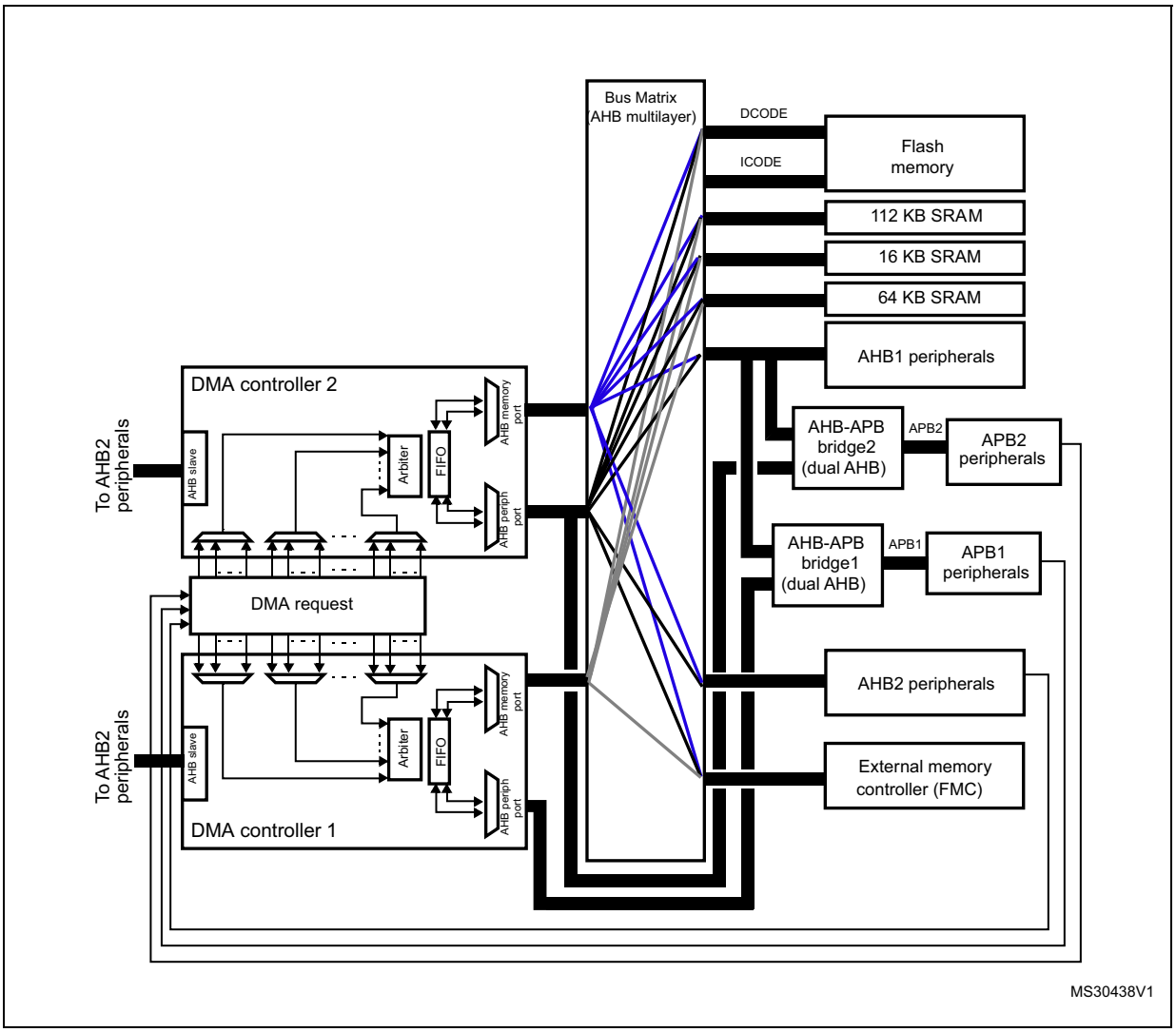

1. The DMA1 controller AHB peripheral port is not connected to the bus matrix like in the case of the DMA2 controller, thus only DMA2 streams are able to perform memory-to-memory transfers.

10.3.2 DMA transactions

A DMA transaction consists of a sequence of a given number of data transfers. The number of data items to be transferred and their width (8-bit, 16-bit or 32-bit) are software-programmable.

Each DMA transfer consists of three operations:

- A loading from the peripheral data register or a location in memory, addressed through the DMA_SxPAR or DMA_SxM0AR register
- A storage of the data loaded to the peripheral data register or a location in memory addressed through the DMA_SxPAR or DMA_SxM0AR register
- A post-decrement of the DMA_SxNDTR register, which contains the number of transactions that still have to be performed

After an event, the peripheral sends a request signal to the DMA controller. The DMA controller serves the request depending on the channel priorities. As soon as the DMA controller accesses the peripheral, an Acknowledge signal is sent to the peripheral by the DMA controller. The peripheral releases its request as soon as it gets the Acknowledge signal from the DMA controller. Once the request has been deasserted by the peripheral, the DMA controller releases the Acknowledge signal. If there are more requests, the peripheral can initiate the next transaction.

10.3.3 Channel selection

Each stream is associated with a DMA request that can be selected out of 8 possible channel requests. The selection is controlled by the CHSEL[2:0] bits in the DMA_SxCR register.

Figure 35. Channel selection

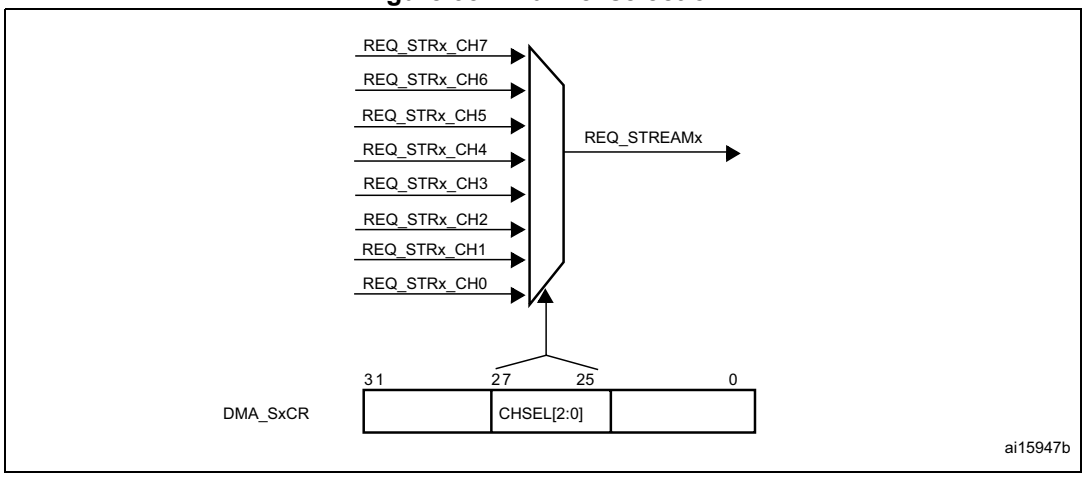

The 8 requests from the peripherals (TIM, ADC, SPI, I2C, etc.) are independently connected to each channel and their connection depends on the product implementation.

See the following table(s) for examples of DMA request mappings.

Table 42. DMA1 request mapping

Peripheral requests	Stream 0	Stream 1	Stream 2	Stream 3	Stream 4	Stream 5	Stream 6	Stream 7
Channel 0	SPI3_RX	-	SPI3_RX	SPI2_RX	SPI2_TX	SPI3_TX	-	SPI3_TX
Channel 1	I2C1_RX	-	TIM7_UP	-	TIM7_UP	I2C1_RX	I2C1_TX	I2C1_TX
Channel 2	TIM4_CH1	-	I2S3_EXT_RX	TIM4_CH2	I2S2_EXT_TX	I2S3_EXT_TX	TIM4_UP	TIM4_CH3
Channel 3	I2S3_EXT_RX	TIM2_UP TIM2_CH3	I2C3_RX	I2S2_EXT_RX	I2C3_TX	TIM2_CH1	TIM2_CH2 TIM2_CH4	TIM2_UP TIM2_CH4
Channel 4	UART5_RX	USART3_RX	UART4_RX	USART3_TX	UART4_TX	USART2_RX	USART2_TX	UART5_TX
Channel 5	UART8_TX(1)	UART7_TX(1)	TIM3_CH4 TIM3_UP	UART7_RX(1)	TIM3_CH1 TIM3_TRIG	TIM3_CH2	UART8_RX(1)	TIM3_CH3

Table 42. DMA1 request mapping (continued)

Peripheral requests	Stream 0	Stream 1	Stream 2	Stream 3	Stream 4	Stream 5	Stream 6	Stream 7
Channel 6	TIM5_CH3 TIM5_UP	TIM5_CH4 TIM5_TRIG	TIM5_CH1	TIM5_CH4 TIM5_TRIG	TIM5_CH2	-	TIM5_UP	-
Channel 7	-	TIM6_UP	I2C2_RX	I2C2_RX	USART3_TX	DAC1	DAC2	I2C2_TX

1. These requests are available on STM32F42xxx and STM32F43xxx only.

Table 43. DMA2 request mapping

Peripheral requests	Stream 0	Stream 1	Stream 2	Stream 3	Stream 4	Stream 5	Stream 6	Stream 7
Channel 0	ADC1	SAI1_A(1)	TIM8_CH1 TIM8_CH2 TIM8_CH3	SAI1_A(1)	ADC1	SAI1_B(1)	TIM1_CH1 TIM1_CH2 TIM1_CH3	-
Channel 1	-	DCMI	ADC2	ADC2	SAI1_B(1)	SPI6_TX(1)	SPI6_RX(1)	DCMI
Channel 2	ADC3	ADC3	-	SPI5_RX(1)	SPI5_TX(1)	CRYP_OUT	CRYP_IN	HASH_IN
Channel 3	SPI1_RX	-	SPI1_RX	SPI1_TX	-	SPI1_TX	-	-
Channel 4	SPI4_RX(1)	SPI4_TX(1)	USART1_RX	SDIO	-	USART1_RX	SDIO	USART1_TX
Channel 5	-	USART6_RX	USART6_RX	SPI4_RX(1)	SPI4_TX(1)	-	USART6_TX	USART6_TX
Channel 6	TIM1_TRIG	TIM1_CH1	TIM1_CH2	TIM1_CH1	TIM1_CH4 TIM1_TRIG TIM1_COM	TIM1_UP	TIM1_CH3	-
Channel 7	-	TIM8_UP	TIM8_CH1	TIM8_CH2	TIM8_CH3	SPI5_RX(1)	SPI5_TX(1)	TIM8_CH4 TIM8_TRIG TIM8_COM

1. These requests are available on STM32F42xxx and STM32F43xxx.

10.3.4 Arbiter

An arbiter manages the 8 DMA stream requests based on their priority for each of the two AHB master ports (memory and peripheral ports) and launches the peripheral/memory access sequences.

Priorities are managed in two stages:

- Software: each stream priority can be configured in the DMA_SxCR register. There are four levels:
  - Very high priority
  - High priority
  - Medium priority
  - Low priority
- Hardware: If two requests have the same software priority level, the stream with the lower number takes priority over the stream with the higher number. For example, Stream 2 takes priority over Stream 4.

10.3.5 DMA streams

Each of the 8 DMA controller streams provides a unidirectional transfer link between a source and a destination.

Each stream can be configured to perform:

- Regular type transactions: memory-to-peripherals, peripherals-to-memory or memory-to-memory transfers
- Double-buffer type transactions: double buffer transfers using two memory pointers for the memory (while the DMA is reading/writing from/to a buffer, the application can write/read to/from the other buffer).

The amount of data to be transferred (up to 65535) is programmable and related to the source width of the peripheral that requests the DMA transfer connected to the peripheral AHB port. The register that contains the amount of data items to be transferred is decremented after each transaction.

10.3.6 Source, destination and transfer modes

Both source and destination transfers can address peripherals and memories in the entire 4 GB area, at addresses comprised between 0x0000 0000 and 0xFFFF FFFF.

The direction is configured using the DIR[1:0] bits in the DMA_SxCR register and offers three possibilities: memory-to-peripheral, peripheral-to-memory or memory-to-memory transfers. *Table 44* describes the corresponding source and destination addresses.

Table 44. Source and destination address

Bits DIR[1:0] of the DMA_SxCR register	Direction	Source address	Destination address
00	Peripheral-to-memory	DMA_SxPAR	DMA_SxM0AR
01	Memory-to-peripheral	DMA_SxM0AR	DMA_SxPAR
10	Memory-to-memory	DMA_SxPAR	DMA_SxM0AR
11	reserved	-	-

When the data width (programmed in the PSIZE or MSIZE bits in the DMA_SxCR register) is a half-word or a word, respectively, the peripheral or memory address written into the DMA_SxPAR or DMA_SxM0AR/M1AR registers has to be aligned on a word or half-word address boundary, respectively.

Peripheral-to-memory mode

Figure 36 describes this mode.

When this mode is enabled (by setting the bit EN in the DMA_SxCR register), each time a peripheral request occurs, the stream initiates a transfer from the source to fill the FIFO.

When the threshold level of the FIFO is reached, the contents of the FIFO are drained and stored into the destination.

The transfer stops once the DMA_SxNDTR register reaches zero, when the peripheral requests the end of transfers (in case of a peripheral flow controller) or when the EN bit in the DMA_SxCR register is cleared by software.

In direct mode (when the DMDIS value in the DMA_SxFCR register is ‘0’), the threshold level of the FIFO is not used: after each single data transfer from the peripheral to the FIFO, the corresponding data are immediately drained and stored into the destination.

The stream has access to the AHB source or destination port only if the arbitration of the corresponding stream is won. This arbitration is performed using the priority defined for each stream using the PL[1:0] bits in the DMA_SxCR register.

Figure 36. Peripheral-to-memory mode

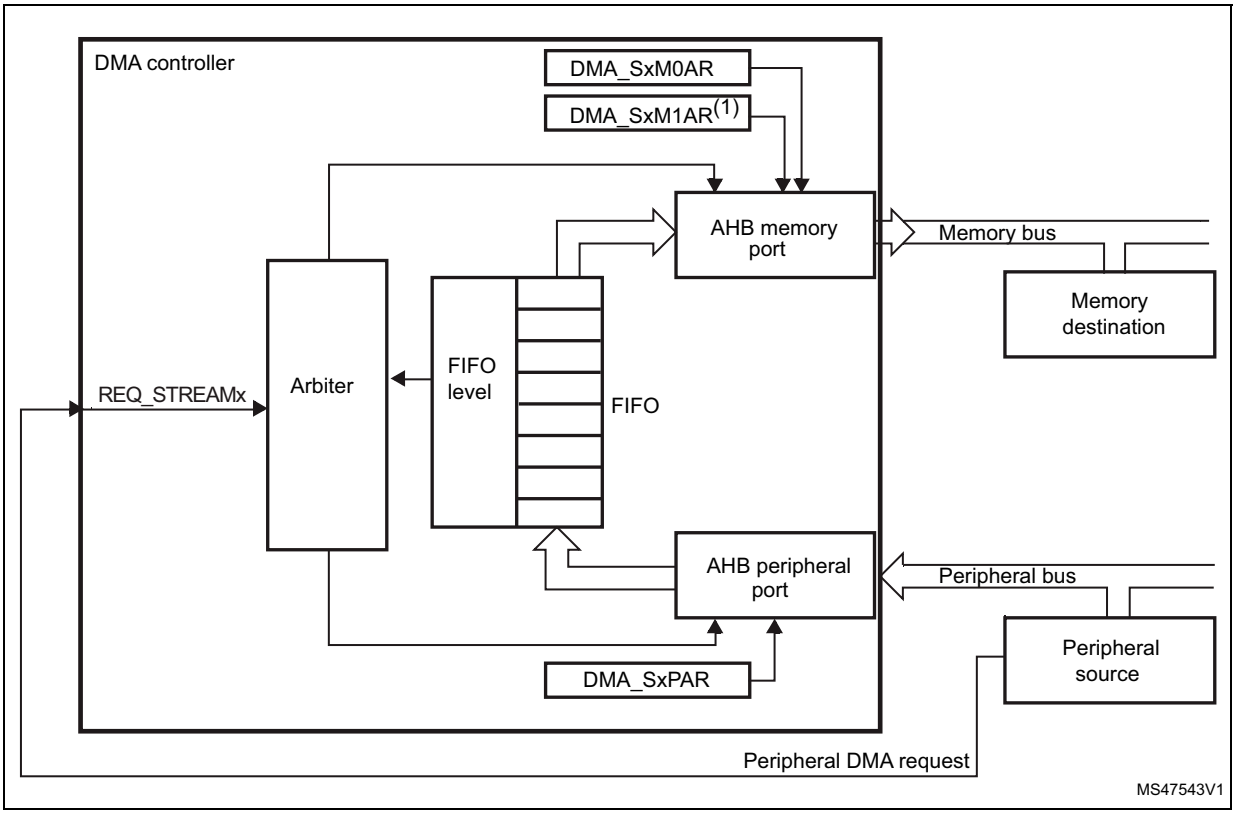

1. For double-buffer mode.

Memory-to-peripheral mode

Figure 37 describes this mode.

When this mode is enabled (by setting the EN bit in the DMA_SxCR register), the stream immediately initiates transfers from the source to entirely fill the FIFO.

Each time a peripheral request occurs, the contents of the FIFO are drained and stored into the destination. When the level of the FIFO is lower than or equal to the predefined threshold level, the FIFO is fully reloaded with data from the memory.

The transfer stops once the DMA_SxNDTR register reaches zero, when the peripheral requests the end of transfers (in case of a peripheral flow controller) or when the EN bit in the DMA_SxCR register is cleared by software.

In direct mode (when the DMDIS value in the DMA_SxFCR register is '0'), the threshold level of the FIFO is not used. Once the stream is enabled, the DMA preloads the first data to transfer into an internal FIFO. As soon as the peripheral requests a data transfer, the DMA transfers the preloaded value into the configured destination. It then reloads again the

empty internal FIFO with the next data to be transfer. The preloaded data size corresponds to the value of the PSIZE bitfield in the DMA_SxCR register.

The stream has access to the AHB source or destination port only if the arbitration of the corresponding stream is won. This arbitration is performed using the priority defined for each stream using the PL[1:0] bits in the DMA_SxCR register.

Figure 37. Memory-to-peripheral mode

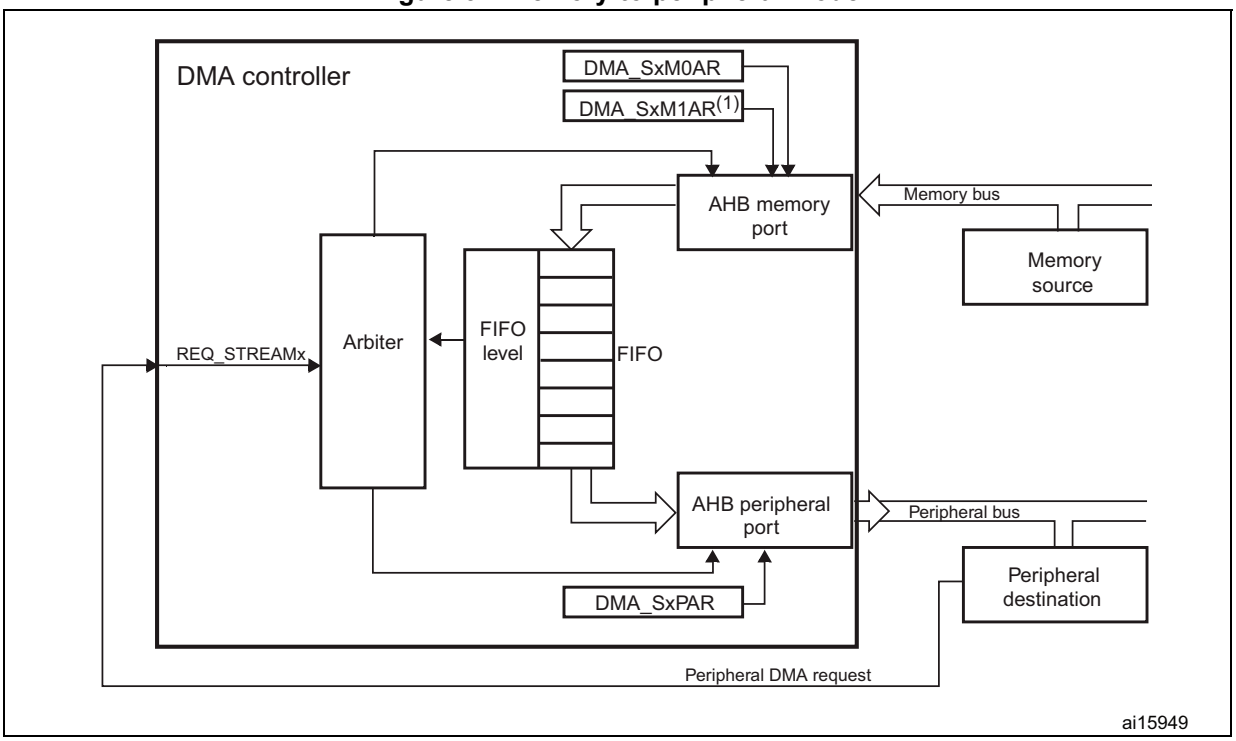

1. For double-buffer mode.

Memory-to-memory mode

The DMA channels can also work without being triggered by a request from a peripheral. This is the memory-to-memory mode, described in *Figure 38*.

When the stream is enabled by setting the Enable bit (EN) in the DMA_SxCR register, the stream immediately starts to fill the FIFO up to the threshold level. When the threshold level is reached, the FIFO contents are drained and stored into the destination.

The transfer stops once the DMA_SxNDTR register reaches zero or when the EN bit in the DMA_SxCR register is cleared by software.

The stream has access to the AHB source or destination port only if the arbitration of the corresponding stream is won. This arbitration is performed using the priority defined for each stream using the PL[1:0] bits in the DMA_SxCR register.

Note: When memory-to-memory mode is used, the Circular and direct modes are not allowed.

Only the DMA2 controller is able to perform memory-to-memory transfers.

Figure 38. Memory-to-memory mode

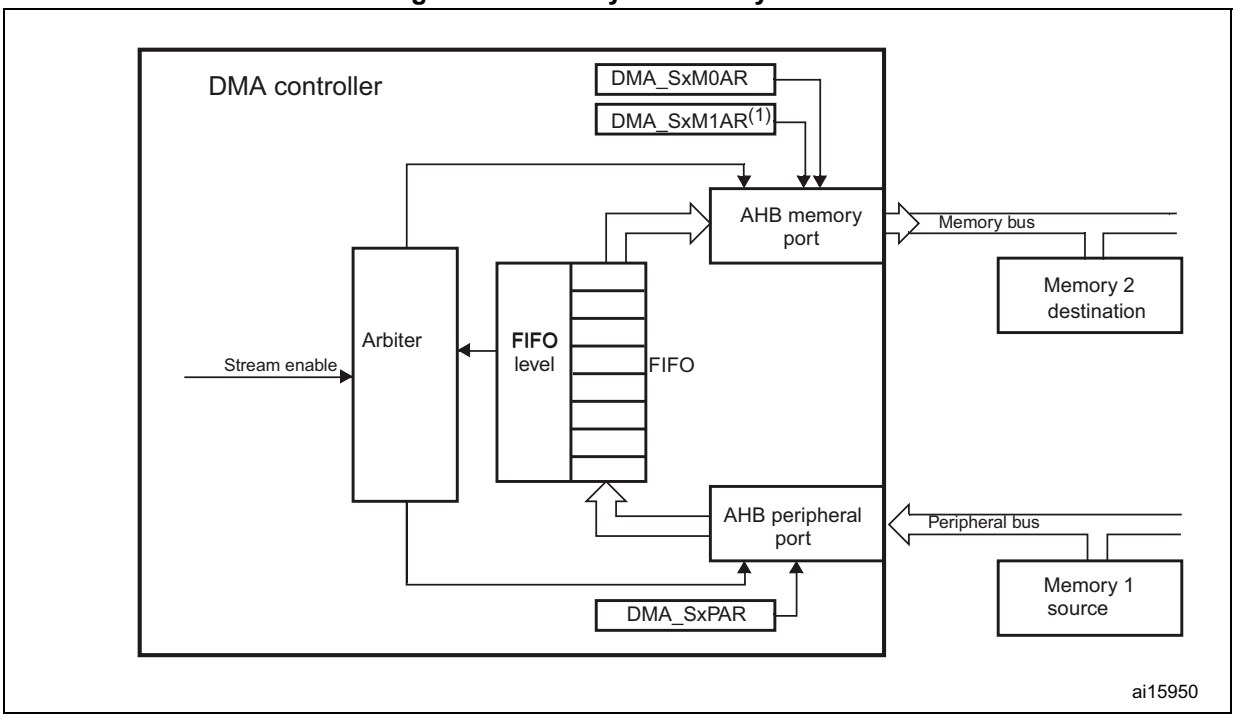

1. For double-buffer mode.

10.3.7 Pointer incrementation

Peripheral and memory pointers can optionally be automatically post-incremented or kept constant after each transfer depending on the PINC and MINC bits in the DMA_SxCR register.

Disabling the Increment mode is useful when the peripheral source or destination data are accessed through a single register.

If the Increment mode is enabled, the address of the next transfer will be the address of the previous one incremented by 1 (for bytes), 2 (for half-words) or 4 (for words) depending on the data width programmed in the PSIZE or MSIZE bits in the DMA_SxCR register.

In order to optimize the packing operation, it is possible to fix the increment offset size for the peripheral address whatever the size of the data transferred on the AHB peripheral port. The PINCOS bit in the DMA_SxCR register is used to align the increment offset size with the data size on the peripheral AHB port, or on a 32-bit address (the address is then incremented by 4). The PINCOS bit has an impact on the AHB peripheral port only.

If PINCOS bit is set, the address of the next transfer is the address of the previous one incremented by 4 (automatically aligned on a 32-bit address) whatever the PSIZE value. The AHB memory port, however, is not impacted by this operation.

10.3.8 Circular mode

The Circular mode is available to handle circular buffers and continuous data flows (e.g. ADC scan mode). This feature can be enabled using the CIRC bit in the DMA_SxCR register.

When the circular mode is activated, the number of data items to be transferred is automatically reloaded with the initial value programmed during the stream configuration phase, and the DMA requests continue to be served.

Note: In the circular mode, it is mandatory to respect the following rule in case of a burst mode configured for memory:

DMA_SxNDTR = Multiple of ((Mburst beat) × (Msize)/(Psize)), where:

- *(Mburst beat) = 4, 8 or 16 (depending on the MBURST bits in the DMA_SxCR register)*
- *((Msize)/(Psize)) = 1, 2, 4, 1/2 or 1/4 (Msize and Psize represent the MSIZE and PSIZE bits in the DMA_SxCR register. They are byte dependent)*
- *DMA_SxNDTR = Number of data items to transfer on the AHB peripheral port*

For example: Mburst beat = 8 (INCR8), MSIZE = '00' (byte) and PSIZE = '01' (half-word), in this case: DMA_SxNDTR must be a multiple of (8 × 1/2 = 4).

If this formula is not respected, the DMA behavior and data integrity are not guaranteed.

NDTR must also be a multiple of the Peripheral burst size multiplied by the peripheral data size, otherwise this could result in a bad DMA behavior.

10.3.9 Double buffer mode

This mode is available for all the DMA1 and DMA2 streams.

The Double buffer mode is enabled by setting the DBM bit in the DMA_SxCR register.

A double-buffer stream works as a regular (single buffer) stream with the difference that it has two memory pointers. When the Double buffer mode is enabled, the Circular mode is automatically enabled (CIRC bit in DMA_SxCR is don't care) and at each end of transaction, the memory pointers are swapped.

In this mode, the DMA controller swaps from one memory target to another at each end of transaction. This allows the software to process one memory area while the second memory area is being filled/used by the DMA transfer. The double-buffer stream can work in both directions (the memory can be either the source or the destination) as described in *Table 45: Source and destination address registers in Double buffer mode (DBM=1)*.

*Note: In Double buffer mode, it is possible to update the base address for the AHB memory port on-the-fly (*DMA_SxM0AR or DMA_SxM1AR*) when the stream is enabled, by respecting the following conditions:*

- *When the CT bit is '0' in the DMA_SxCR register, the DMA_SxM1AR register can be written. Attempting to write to this register while CT = '1' sets an error flag (TEIF) and the stream is automatically disabled.*
- *When the CT bit is '1' in the DMA_SxCR register, the DMA_SxM0AR register can be written. Attempting to write to this register while CT = '0', sets an error flag (TEIF) and the stream is automatically disabled.*

To avoid any error condition, it is advised to change the base address as soon as the TCIF flag is asserted because, at this point, the targeted memory must have changed from

memory 0 to 1 (or from 1 to 0) depending on the value of CT in the DMA_SxCR register in accordance with one of the two above conditions.

For all the other modes (except the Double buffer mode), the memory address registers are write-protected as soon as the stream is enabled.

Table 45. Source and destination address registers in Double buffer mode (DBM=1)

Bits DIR[1:0] of the DMA_SxCR register	Direction	Source address	Destination address
00	Peripheral-to-memory	DMA_SxPAR	DMA_SxM0AR / DMA_SxM1AR
01	Memory-to-peripheral	DMA_SxM0AR / DMA_SxM1AR	DMA_SxPAR
10	Not allowed(1)		
11	Reserved	-	-

1. When the Double buffer mode is enabled, the Circular mode is automatically enabled. Since the memory-to-memory mode is not compatible with the Circular mode, when the Double buffer mode is enabled, it is not allowed to configure the memory-to-memory mode.

10.3.10 Programmable data width, packing/unpacking, endianess

The number of data items to be transferred has to be programmed into DMA_SxNDTR (number of data items to transfer bit, NDT) before enabling the stream (except when the flow controller is the peripheral, PFCTRL bit in DMA_SxCR is set).

When using the internal FIFO, the data widths of the source and destination data are programmable through the PSIZE and MSIZE bits in the DMA_SxCR register (can be 8-, 16- or 32-bit).

When PSIZE and MSIZE are not equal:

- The data width of the number of data items to transfer, configured in the DMA_SxNDTR register is equal to the width of the peripheral bus (configured by the PSIZE bits in the DMA_SxCR register). For instance, in case of peripheral-to-memory, memory-to-peripheral or memory-to-memory transfers and if the PSIZE[1:0] bits are configured for half-word, the number of bytes to be transferred is equal to 2 × NDT.
- The DMA controller only copes with little-endian addressing for both source and destination. This is described in *Table 46: Packing/unpacking & endian behavior (bit PINC = MINC = 1)*.

This packing/unpacking procedure may present a risk of data corruption when the operation is interrupted before the data are completely packed/unpacked. So, to ensure data coherence, the stream may be configured to generate burst transfers: in this case, each group of transfers belonging to a burst are indivisible (refer to *Section 10.3.11: Single and burst transfers*).

In direct mode (DMDIS = 0 in the DMA_SxFCR register), the packing/unpacking of data is not possible. In this case, it is not allowed to have different source and destination transfer data widths: both are equal and defined by the PSIZE bits in the DMA_SxCR MSIZE bits are don't care).

Table 46. Packing/unpacking & endian behavior (bit PINC = MINC = 1)

AHB memory port width	AHB peripheral port width	Number of data items to transfer (NDT)	Memory transfer number	Memory port address / byte lane	Peripheral transfer number	Peripheral port address / byte lane	
						PINCOS = 1	PINCOS = 0
8	8	4	1 2 3 4	0x0 / B0[7:0] 0x1 / B1[7:0] 0x2 / B2[7:0] 0x3 / B3[7:0]	1 2 3 4	0x0 / B0[7:0] 0x4 / B1[7:0] 0x8 / B2[7:0] 0xC / B3[7:0]	0x0 / B0[7:0] 0x1 / B1[7:0] 0x2 / B2[7:0] 0x3 / B3[7:0]
8	16	2	1 2 3 4	0x0 / B0[7:0] 0x1 / B1[7:0] 0x2 / B2[7:0] 0x3 / B3[7:0]	1 2	0x0 / B1|B0[15:0] 0x4 / B3|B2[15:0]	0x0 / B1|B0[15:0] 0x2 / B3|B2[15:0]
8	32	1	1 2 3 4	0x0 / B0[7:0] 0x1 / B1[7:0] 0x2 / B2[7:0] 0x3 / B3[7:0]	1	0x0 / B3|B2|B1|B0[31:0]	0x0 / B3|B2|B1|B0[31:0]
16	8	4	1 2	0x0 / B1|B0[15:0] 0x2 / B3|B2[15:0]	1 2 3 4	0x0 / B0[7:0] 0x4 / B1[7:0] 0x8 / B2[7:0] 0xC / B3[7:0]	0x0 / B0[7:0] 0x1 / B1[7:0] 0x2 / B2[7:0] 0x3 / B3[7:0]
16	16	2	1 2	0x0 / B1|B0[15:0] 0x2 / B1|B0[15:0]	1 2	0x0 / B1|B0[15:0] 0x4 / B3|B2[15:0]	0x0 / B1|B0[15:0] 0x2 / B3|B2[15:0]
16	32	1	1 2	0x0 / B1|B0[15:0] 0x2 / B3|B2[15:0]	1	0x0 / B3|B2|B1|B0[31:0]	0x0 / B3|B2|B1|B0[31:0]
32	8	4	1	0x0 / B3|B2|B1|B0[31:0]	1 2 3 4	0x0 / B0[7:0] 0x4 / B1[7:0] 0x8 / B2[7:0] 0xC / B3[7:0]	0x0 / B0[7:0] 0x1 / B1[7:0] 0x2 / B2[7:0] 0x3 / B3[7:0]
32	16	2	1	0x0 /B3|B2|B1|B0[31:0]	1 2	0x0 / B1|B0[15:0] 0x4 / B3|B2[15:0]	0x0 / B1|B0[15:0] 0x2 / B3|B2[15:0]
32	32	1	1	0x0 /B3|B2|B1|B0 [31:0]	1	0x0 /B3|B2|B1|B0 [31:0]	0x0 / B3|B2|B1|B0[31:0]

Note: Peripheral port may be the source or the destination (it could also be the memory source in the case of memory-to-memory transfer).

PSIZE, MSIZE and NDT[15:0] have to be configured so as to ensure that the last transfer will not be incomplete. This can occur when the data width of the peripheral port (PSIZE bits) is lower than the data width of the memory port (MSIZE bits). This constraint is summarized in *Table 47*.

Table 47. Restriction on NDT versus PSIZE and MSIZE

PSIZE[1:0] of DMA_SxCR	MSIZE[1:0] of DMA_SxCR	NDT[15:0] of DMA_SxNDTR
00 (8-bit)	01 (16-bit)	must be a multiple of 2
00 (8-bit)	10 (32-bit)	must be a multiple of 4
01 (16-bit)	10 (32-bit)	must be a multiple of 2

10.3.11 Single and burst transfers

The DMA controller can generate single transfers or incremental burst transfers of 4, 8 or 16 beats.

The size of the burst is configured by software independently for the two AHB ports by using the MBURST[1:0] and PBURST[1:0] bits in the DMA_SxCR register.

The burst size indicates the number of beats in the burst, not the number of bytes transferred.

To ensure data coherence, each group of transfers that form a burst are indivisible: AHB transfers are locked and the arbiter of the AHB bus matrix does not degrant the DMA master during the sequence of the burst transfer.

Depending on the single or burst configuration, each DMA request initiates a different number of transfers on the AHB peripheral port:

- When the AHB peripheral port is configured for single transfers, each DMA request generates a data transfer of a byte, half-word or word depending on the PSIZE[1:0] bits in the DMA_SxCR register
- When the AHB peripheral port is configured for burst transfers, each DMA request generates 4,8 or 16 beats of byte, half word or word transfers depending on the PBURST[1:0] and PSIZE[1:0] bits in the DMA_SxCR register.

The same as above has to be considered for the AHB memory port considering the MBURST and MSIZE bits.

In direct mode, the stream can only generate single transfers and the MBURST[1:0] and PBURST[1:0] bits are forced by hardware.

The address pointers (DMA_SxPAR or DMA_SxM0AR registers) must be chosen so as to ensure that all transfers within a burst block are aligned on the address boundary equal to the size of the transfer.

The burst configuration has to be selected in order to respect the AHB protocol, where bursts must *not* cross the 1 KB address boundary because the minimum address space that can be allocated to a single slave is 1 KB. This means that the 1 KB address boundary should not be crossed by a burst block transfer, otherwise an AHB error would be generated, that is not reported by the DMA registers.

10.3.12 FIFO

FIFO structure

The FIFO is used to temporarily store data coming from the source before transmitting them to the destination.

Each stream has an independent 4-word FIFO and the threshold level is software-configurable between 1/4, 1/2, 3/4 or full.

To enable the use of the FIFO threshold level, the direct mode must be disabled by setting the DMDIS bit in the DMA_SxFCR register.

The structure of the FIFO differs depending on the source and destination data widths, and is described in *Figure 39: FIFO structure*.

Figure 39. FIFO structure

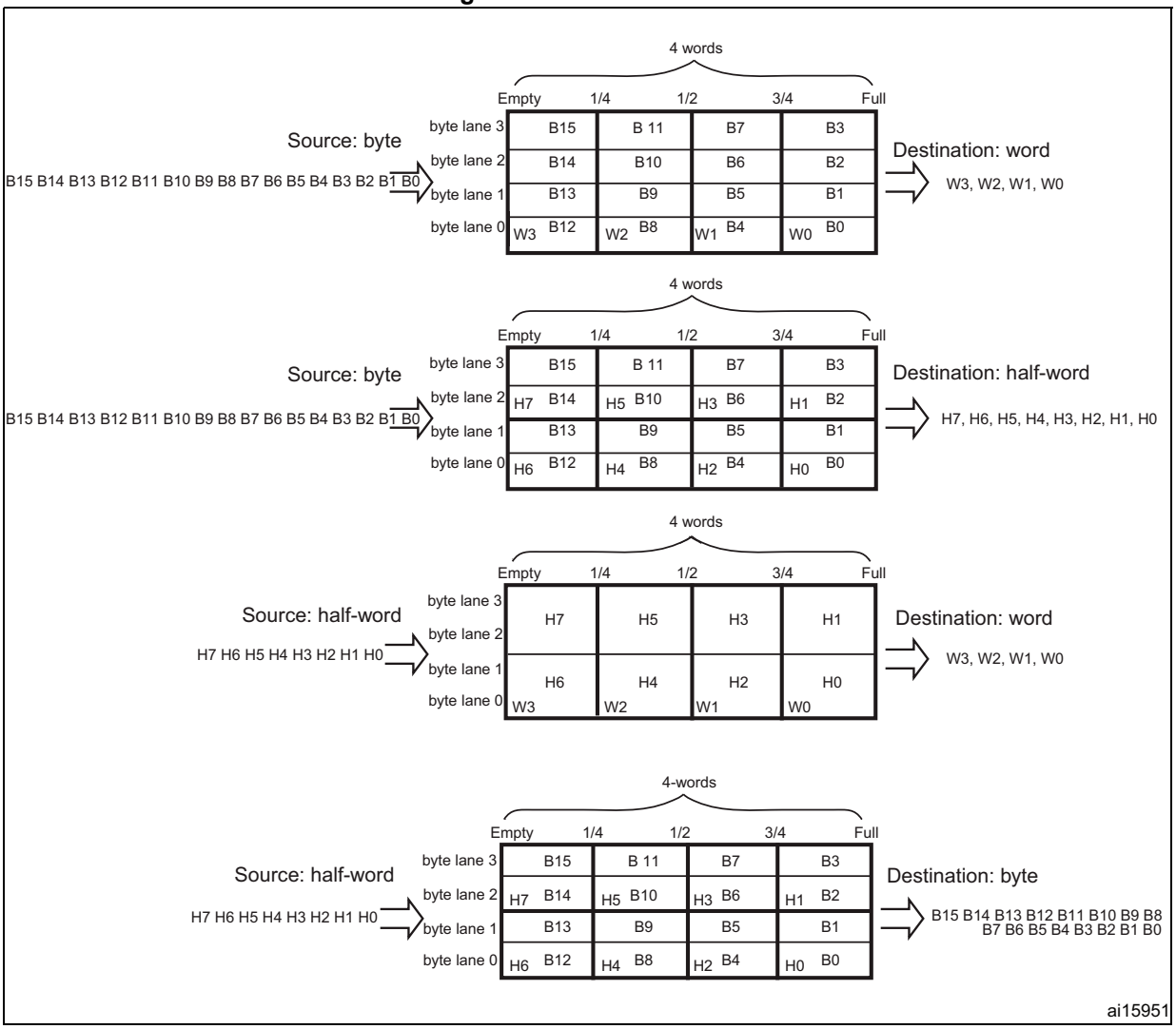

FIFO threshold and burst configuration

Caution is required when choosing the FIFO threshold (bits FTH[1:0] of the DMA_SxFCR register) and the size of the memory burst (MBURST[1:0] of the DMA_SxCR register): The content pointed by the FIFO threshold must exactly match to an integer number of memory burst transfers. If this is not in the case, a FIFO error (flag FEIFx of the DMA_HISR or DMA_LISR register) will be generated when the stream is enabled, then the stream will be automatically disabled. The allowed and forbidden configurations are described in the *Table 48: FIFO threshold configurations*.

Table 48. FIFO threshold configurations

MSIZE	FIFO level	MBURST = INCR4	MBURST = INCR8	MBURST = INCR16
Byte	1/4	1 burst of 4 beats	forbidden	forbidden
	1/2	2 bursts of 4 beats	1 burst of 8 beats	
	3/4	3 bursts of 4 beats	forbidden	
	Full	4 bursts of 4 beats	2 bursts of 8 beats	1 burst of 16 beats
Half-word	1/4	forbidden	forbidden	forbidden
	1/2	1 burst of 4 beats		
	3/4	forbidden		
	Full	2 bursts of 4 beats	1 burst of 8 beats	
Word	1/4	forbidden	forbidden	
	1/2			
	3/4			
	Full	1 burst of 4 beats		

In all cases, the burst size multiplied by the data size must not exceed the FIFO size (data size can be: 1 (byte), 2 (half-word) or 4 (word)).

Incomplete Burst transfer at the end of a DMA transfer may happen if one of the following conditions occurs:

- For the AHB peripheral port configuration: the total number of data items (set in the DMA_SxNDTR register) is not a multiple of the burst size multiplied by the data size
- For the AHB memory port configuration: the number of remaining data items in the FIFO to be transferred to the memory is not a multiple of the burst size multiplied by the data size

In such cases, the remaining data to be transferred will be managed in single mode by the DMA, even if a burst transaction was requested during the DMA stream configuration.

Note: When burst transfers are requested on the peripheral AHB port and the FIFO is used (DMDIS = 1 in the DMA_SxCR register), it is mandatory to respect the following rule to avoid permanent underrun or overrun conditions, depending on the DMA stream direction:

If (PBURST × PSIZE) = FIFO_SIZE (4 words), FIFO_Threshold = 3/4 is forbidden with PSIZE = 1, 2 or 4 and PBURST = 4, 8 or 16.

This rule ensures that enough FIFO space at a time will be free to serve the request from the peripheral.

FIFO flush

The FIFO can be flushed when the stream is disabled by resetting the EN bit in the DMA_SxCR register and when the stream is configured to manage peripheral-to-memory or memory-to-memory transfers: If some data are still present in the FIFO when the stream is disabled, the DMA controller continues transferring the remaining data to the destination (even though stream is effectively disabled). When this flush is completed, the transfer complete status bit (TCIFx) in the DMA_LISR or DMA_HISR register is set.

The remaining data counter DMA_SxNDTR keeps the value in this case to indicate how many data items are currently available in the destination memory.

Note that during the FIFO flush operation, if the number of remaining data items in the FIFO to be transferred to memory (in bytes) is less than the memory data width (for example 2 bytes in FIFO while MSIZE is configured to word), data will be sent with the data width set in the MSIZE bit in the DMA_SxCR register. This means that memory will be written with an undesired value. The software may read the DMA_SxNDTR register to determine the memory area that contains the good data (start address and last address).

If the number of remaining data items in the FIFO is lower than a burst size (if the MBURST bits in DMA_SxCR register are set to configure the stream to manage burst on the AHB memory port), single transactions will be generated to complete the FIFO flush.

Direct mode

By default, the FIFO operates in direct mode (DMDIS bit in the DMA_SxFCR is reset) and the FIFO threshold level is not used. This mode is useful when the system requires an immediate and single transfer to or from the memory after each DMA request.

When the DMA is configured in direct mode (FIFO disabled), to transfer data in memory-to-peripheral mode, the DMA preloads one data from the memory to the internal FIFO to ensure an immediate data transfer as soon as a DMA request is triggered by a peripheral.

To avoid saturating the FIFO, it is recommended to configure the corresponding stream with a high priority.

This mode is restricted to transfers where:

- The source and destination transfer widths are equal and both defined by the PSIZE[1:0] bits in DMA_SxCR (MSIZE[1:0] bits are don’t care)
- Burst transfers are not possible (PBURST[1:0] and MBURST[1:0] bits in DMA_SxCR are don’t care)

Direct mode must not be used when implementing memory-to-memory transfers.

10.3.13 DMA transfer completion

Different events can generate an end of transfer by setting the TCIFx bit in the DMA_LISR or DMA_HISR status register:

- In DMA flow controller mode:
  - The DMA_SxNDTR counter has reached zero in the memory-to-peripheral mode
  - The stream is disabled before the end of transfer (by clearing the EN bit in the DMA_SxCR register) and (when transfers are peripheral-to-memory or memory-

to-memory) all the remaining data have been flushed from the FIFO into the memory

- In Peripheral flow controller mode:
  - The last external burst or single request has been generated from the peripheral and (when the DMA is operating in peripheral-to-memory mode) the remaining data have been transferred from the FIFO into the memory
  - The stream is disabled by software, and (when the DMA is operating in peripheral-to-memory mode) the remaining data have been transferred from the FIFO into the memory

Note: The transfer completion is dependent on the remaining data in FIFO to be transferred into memory only in the case of peripheral-to-memory mode. This condition is not applicable in memory-to-peripheral mode.

If the stream is configured in noncircular mode, after the end of the transfer (that is when the number of data to be transferred reaches zero), the DMA is stopped (EN bit in DMA_SxCR register is cleared by Hardware) and no DMA request is served unless the software reprograms the stream and re-enables it (by setting the EN bit in the DMA_SxCR register).

10.3.14 DMA transfer suspension

At any time, a DMA transfer can be suspended to be restarted later on or to be definitively disabled before the end of the DMA transfer.

There are two cases:

- The stream disables the transfer with no later-on restart from the point where it was stopped. There is no particular action to do, except to clear the EN bit in the DMA_SxCR register to disable the stream. The stream may take time to be disabled (ongoing transfer is completed first). The transfer complete interrupt flag (TCIF in the DMA_LISR or DMA_HISR register) is set in order to indicate the end of transfer. The value of the EN bit in DMA_SxCR is now ‘0’ to confirm the stream interruption. The DMA_SxNDTR register contains the number of remaining data items at the moment when the stream was stopped so that the software can determine how many data items have been transferred before the stream was interrupted.
- The stream suspends the transfer before the number of remaining data items to be transferred in the DMA_SxNDTR register reaches 0. The aim is to restart the transfer later by re-enabling the stream. In order to restart from the point where the transfer was stopped, the software has to read the DMA_SxNDTR register after disabling the stream by writing the EN bit in DMA_SxCR register (and then checking that it is at ‘0’) to know the number of data items already collected. Then:
  - The peripheral and/or memory addresses have to be updated in order to adjust the address pointers
  - The SxNDTR register has to be updated with the remaining number of data items to be transferred (the value read when the stream was disabled)
  - The stream may then be re-enabled to restart the transfer from the point it was stopped

Note: Note that a Transfer complete interrupt flag (TCIF in DMA_LISR or DMA_HISR) is set to indicate the end of transfer due to the stream interruption.

10.3.15 Flow controller

The entity that controls the number of data to be transferred is known as the flow controller. This flow controller is configured independently for each stream using the PFCTRL bit in the DMA_SxCR register.

The flow controller can be:

- The DMA controller: in this case, the number of data items to be transferred is programmed by software into the DMA_SxNDTR register before the DMA stream is enabled.
- The peripheral source or destination: this is the case when the number of data items to be transferred is unknown. The peripheral indicates by hardware to the DMA controller when the last data are being transferred. This feature is only supported for peripherals which are able to signal the end of the transfer, that is:
  - SDIO

When the peripheral flow controller is used for a given stream, the value written into the DMA_SxNDTR has no effect on the DMA transfer. Actually, whatever the value written, it will be forced by hardware to 0xFFFF as soon as the stream is enabled, to respect the following schemes:

- Anticipated stream interruption: EN bit in DMA_SxCR register is reset to 0 by the software to stop the stream before the last data hardware signal (single or burst) is sent by the peripheral. In such a case, the stream is switched off and the FIFO flush is triggered in the case of a peripheral-to-memory DMA transfer. The TCIFx flag of the corresponding stream is set in the status register to indicate the DMA completion. To know the number of data items transferred during the DMA transfer, read the DMA_SxNDTR register and apply the following formula:
  - Number_of_data_transferred = 0xFFFF – DMA_SxNDTR
- Normal stream interruption due to the reception of a last data hardware signal: the stream is automatically interrupted when the peripheral requests the last transfer (single or burst) and when this transfer is complete. the TCIFx flag of the corresponding stream is set in the status register to indicate the DMA transfer completion. To know the number of data items transferred, read the DMA_SxNDTR register and apply the same formula as above.
- The DMA_SxNDTR register reaches 0: the TCIFx flag of the corresponding stream is set in the status register to indicate the forced DMA transfer completion. The stream is automatically switched off even though the last data hardware signal (single or burst) has not been yet asserted. The already transferred data will not be lost. This means that a maximum of 65535 data items can be managed by the DMA in a single transaction, even in peripheral flow control mode.

Note: When configured in memory-to-memory mode, the DMA is always the flow controller and the PFCTRL bit is forced to 0 by hardware.

The Circular mode is forbidden in the peripheral flow controller mode.

10.3.16 Summary of the possible DMA configurations

Table 49 summarizes the different possible DMA configurations.

Table 49. Possible DMA configurations

DMA transfer mode	Source	Destination	Flow controller	Circular mode	Transfer type	Direct mode	Double buffer mode
Peripheral-to-memory	AHB peripheral port	AHB memory port	DMA	possible	single	possible	possible
					burst	forbidden	
			Peripheral	forbidden	single	possible	forbidden
					burst	forbidden	
Memory-to-peripheral	AHB memory port	AHB peripheral port	DMA	possible	single	possible	possible
					burst	forbidden	
			Peripheral	forbidden	single	possible	forbidden
					burst	forbidden	
Memory-to-memory	AHB peripheral port	AHB memory port	DMA only	forbidden	single	forbidden	forbidden
					burst		

10.3.17 Stream configuration procedure

The following sequence should be followed to configure a DMA stream x (where x is the stream number):

1. If the stream is enabled, disable it by resetting the EN bit in the DMA_SxCR register, then read this bit in order to confirm that there is no ongoing stream operation. Writing this bit to 0 is not immediately effective since it is actually written to 0 once all the current transfers have finished. When the EN bit is read as 0, this means that the stream is ready to be configured. It is therefore necessary to wait for the EN bit to be cleared before starting any stream configuration. All the stream dedicated bits set in the status register (DMA_LISR and DMA_HISR) from the previous data block DMA transfer should be cleared before the stream can be re-enabled.
2. Set the peripheral port register address in the DMA_SxPAR register. The data will be moved from/ to this address to/ from the peripheral port after the peripheral event.
3. Set the memory address in the DMA_SxMA0R register (and in the DMA_SxMA1R register in the case of a double buffer mode). The data will be written to or read from this memory after the peripheral event.
4. Configure the total number of data items to be transferred in the DMA_SxNDTR register. After each peripheral event or each beat of the burst, this value is decremented.
5. Select the DMA channel (request) using CHSEL[2:0] in the DMA_SxCR register.
6. If the peripheral is intended to be the flow controller and if it supports this feature, set the PFCTRL bit in the DMA_SxCR register.
7. Configure the stream priority using the PL[1:0] bits in the DMA_SxCR register.
8. Configure the FIFO usage (enable or disable, threshold in transmission and reception)
9. Configure the data transfer direction, peripheral and memory incremented/fixed mode, single or burst transactions, peripheral and memory data widths, Circular mode,

Double buffer mode and interrupts after half and/or full transfer, and/or errors in the DMA_SxCR register.

10. Activate the stream by setting the EN bit in the DMA_SxCR register.

As soon as the stream is enabled, it can serve any DMA request from the peripheral connected to the stream.

Once half the data have been transferred on the AHB destination port, the half-transfer flag (HTIF) is set and an interrupt is generated if the half-transfer interrupt enable bit (HTIE) is set. At the end of the transfer, the transfer complete flag (TCIF) is set and an interrupt is generated if the transfer complete interrupt enable bit (TCIE) is set.

Warning: To switch off a peripheral connected to a DMA stream request, it is mandatory to, first, switch off the DMA stream to which the peripheral is connected, then to wait for EN bit = 0. Only then can the peripheral be safely disabled.

10.3.18 Error management

The DMA controller can detect the following errors:

- **Transfer error**: the transfer error interrupt flag (TEIFx) is set when:
  - A bus error occurs during a DMA read or a write access
  - A write access is requested by software on a memory address register in Double buffer mode whereas the stream is enabled and the current target memory is the one impacted by the write into the memory address register (refer to *Section 10.3.9: Double buffer mode*)
- **FIFO error**: the FIFO error interrupt flag (FEIFx) is set if:
  - A FIFO underrun condition is detected
  - A FIFO overrun condition is detected (no detection in memory-to-memory mode because requests and transfers are internally managed by the DMA)
  - The stream is enabled while the FIFO threshold level is not compatible with the size of the memory burst (refer to *Table 48: FIFO threshold configurations*)
- **Direct mode error**: the direct mode error interrupt flag (DMEIFx) can only be set in the peripheral-to-memory mode while operating in direct mode and when the MINC bit in the DMA_SxCR register is cleared. This flag is set when a DMA request occurs while the previous data have not yet been fully transferred into the memory (because the memory bus was not granted). In this case, the flag indicates that 2 data items were be transferred successively to the same destination address, which could be an issue if the destination is not able to manage this situation

In direct mode, the FIFO error flag can also be set under the following conditions:

- In the peripheral-to-memory mode, the FIFO can be saturated (overrun) if the memory bus is not granted for several peripheral requests
- In the memory-to-peripheral mode, an underrun condition may occur if the memory bus has not been granted before a peripheral request occurs

If the TEIFx or the FEIFx flag is set due to incompatibility between burst size and FIFO threshold level, the faulty stream is automatically disabled through a hardware clear of its EN bit in the corresponding stream configuration register (DMA_SxCR).

If the DMEIFx or the FEIFx flag is set due to an overrun or underrun condition, the faulty stream is not automatically disabled and it is up to the software to disable or not the stream by resetting the EN bit in the DMA_SxCR register. This is because there is no data loss when this kind of errors occur.

When the stream's error interrupt flag (TEIF, FEIF, DMEIF) in the DMA_LISR or DMA_HISR register is set, an interrupt is generated if the corresponding interrupt enable bit (TEIE, FEIE, DMIE) in the DMA_SxCR or DMA_SxFCR register is set.

Note: When a FIFO overrun or underrun condition occurs, the data are not lost because the peripheral request is not acknowledged by the stream until the overrun or underrun condition is cleared. If this acknowledge takes too much time, the peripheral itself may detect an overrun or underrun condition of its internal buffer and data might be lost.

10.4 DMA interrupts

For each DMA stream, an interrupt can be produced on the following events:

- Half-transfer reached
- Transfer complete
- Transfer error
- Fifo error (overrun, underrun or FIFO level error)
- Direct mode error

Separate interrupt enable control bits are available for flexibility as shown in *Table 50*.

Table 50. DMA interrupt requests

Interrupt event	Event flag	Enable control bit
Half-transfer	HTIF	HTIE
Transfer complete	TCIF	TCIE
Transfer error	TEIF	TEIE
FIFO overrun/underrun	FEIF	FEIE
Direct mode error	DMEIF	DMEIE

Note: Before setting an Enable control bit to ‘1’, the corresponding event flag should be cleared, otherwise an interrupt is immediately generated.

10.5 DMA registers

The DMA registers have to be accessed by words (32 bits).

10.5.1 DMA low interrupt status register (DMA_LISR)

Address offset: 0x00

Reset value: 0x0000 0000

31	30	29	28	27	26	25	24	23	22	21	20	19	18	17	16
Reserved				TCIF3	HTIF3	TEIF3	DMEIF3	Reserved	FEIF3	TCIF2	HTIF2	TEIF2	DMEIF2	Reserved	FEIF2
r	r	r	r	r	r	r	r		r	r	r	r	r		r

15	14	13	12	11	10	9	8	7	6	5	4	3	2	1	0
Reserved				TCIF1	HTIF1	TEIF1	DMEIF1	Reserved	FEIF1	TCIF0	HTIF0	TEIF0	DMEIF0	Reserved	FEIF0
r	r	r	r	r	r	r	r		r	r	r	r	r		r

Bits 31:28, 15:12 Reserved, must be kept at reset value.

Bits 27, 21, 11, 5 **TCIFx**: Stream x transfer complete interrupt flag (x = 3..0)

This bit is set by hardware. It is cleared by software writing 1 to the corresponding bit in the DMA_LIFCR register.

0: No transfer complete event on stream x

1: A transfer complete event occurred on stream x

Bits 26, 20, 10, 4 **HTIFx**: Stream x half transfer interrupt flag (x=3..0)

This bit is set by hardware. It is cleared by software writing 1 to the corresponding bit in the DMA_LIFCR register.

0: No half transfer event on stream x

1: A half transfer event occurred on stream x

Bits 25, 19, 9, 3 **TEIFx**: Stream x transfer error interrupt flag (x=3..0)

This bit is set by hardware. It is cleared by software writing 1 to the corresponding bit in the DMA_LIFCR register.

0: No transfer error on stream x

1: A transfer error occurred on stream x

Bits 24, 18, 8, 2 **DMEIFx**: Stream x direct mode error interrupt flag (x=3..0)

This bit is set by hardware. It is cleared by software writing 1 to the corresponding bit in the DMA_LIFCR register.

0: No Direct Mode Error on stream x

1: A Direct Mode Error occurred on stream x

Bits 23, 17, 7, 1 Reserved, must be kept at reset value.

Bits 22, 16, 6, 0 **FEIFx**: Stream x FIFO error interrupt flag (x=3..0)

This bit is set by hardware. It is cleared by software writing 1 to the corresponding bit in the DMA_LIFCR register.

0: No FIFO Error event on stream x

1: A FIFO Error event occurred on stream x

10.5.2 DMA high interrupt status register (DMA_HISR)

Address offset: 0x04

Reset value: 0x0000 0000

31	30	29	28	27	26	25	24	23	22	21	20	19	18	17	16
Reserved				TCIF7	HTIF7	TEIF7	DMEIF7	Reserved	FEIF7	TCIF6	HTIF6	TEIF6	DMEIF6	Reserved	FEIF6
				r	r	r	r		r	r	r	r	r		r

15	14	13	12	11	10	9	8	7	6	5	4	3	2	1	0
Reserved				TCIF5	HTIF5	TEIF5	DMEIF5	Reserved	FEIF5	TCIF4	HTIF4	TEIF4	DMEIF4	Reserved	FEIF4
				r	r	r	r		r	r	r	r	r		r

Bits 31:28, 15:12 Reserved, must be kept at reset value.

Bits 27, 21, 11, 5 **TCIFx**: Stream x transfer complete interrupt flag (x=7..4)

This bit is set by hardware. It is cleared by software writing 1 to the corresponding bit in the DMA_HIFCR register.

0: No transfer complete event on stream x

1: A transfer complete event occurred on stream x

Bits 26, 20, 10, 4 **HTIFx**: Stream x half transfer interrupt flag (x=7..4)

This bit is set by hardware. It is cleared by software writing 1 to the corresponding bit in the DMA_HIFCR register.

0: No half transfer event on stream x

1: A half transfer event occurred on stream x

Bits 25, 19, 9, 3 **TEIFx**: Stream x transfer error interrupt flag (x=7..4)

This bit is set by hardware. It is cleared by software writing 1 to the corresponding bit in the DMA_HIFCR register.

0: No transfer error on stream x

1: A transfer error occurred on stream x

Bits 24, 18, 8, 2 **DMEIFx**: Stream x direct mode error interrupt flag (x=7..4)

This bit is set by hardware. It is cleared by software writing 1 to the corresponding bit in the DMA_HIFCR register.

0: No Direct mode error on stream x

1: A Direct mode error occurred on stream x

Bits 23, 17, 7, 1 Reserved, must be kept at reset value.

Bits 22, 16, 6, 0 **FEIFx**: Stream x FIFO error interrupt flag (x=7..4)

This bit is set by hardware. It is cleared by software writing 1 to the corresponding bit in the DMA_HIFCR register.

0: No FIFO error event on stream x

1: A FIFO error event occurred on stream x

10.5.3 DMA low interrupt flag clear register (DMA_LIFCR)

Address offset: 0x08

Reset value: 0x0000 0000

31	30	29	28	27	26	25	24	23	22	21	20	19	18	17	16
Reserved				CTCIF3	CHTIF3	CTEIF3	CDMEIF3	Reserved	CFEIF3	CTCIF2	CHTIF2	CTEIF2	CDMEIF2	Reserved	CFEIF2
				w	w	w	w		w	w	w	w	w		w

15	14	13	12	11	10	9	8	7	6	5	4	3	2	1	0
Reserved				CTCIF1	CHTIF1	CTEIF1	CDMEIF1	Reserved	CFEIF1	CTCIF0	CHTIF0	CTEIF0	CDMEIF0	Reserved	CFEIF0
				w	w	w	w		w	w	w	w	w		w

Bits 31:28, 15:12 Reserved, must be kept at reset value.

Bits 27, 21, 11, 5 **CTCIFx**: Stream x clear transfer complete interrupt flag (x = 3..0)
Writing 1 to this bit clears the corresponding TCIFx flag in the DMA_LISR register

Bits 26, 20, 10, 4 **CHTIFx**: Stream x clear half transfer interrupt flag (x = 3..0)
Writing 1 to this bit clears the corresponding HTIFx flag in the DMA_LISR register

Bits 25, 19, 9, 3 **CTEIFx**: Stream x clear transfer error interrupt flag (x = 3..0)
Writing 1 to this bit clears the corresponding TEIFx flag in the DMA_LISR register

Bits 24, 18, 8, 2 **CDMEIFx**: Stream x clear direct mode error interrupt flag (x = 3..0)
Writing 1 to this bit clears the corresponding DMEIFx flag in the DMA_LISR register

Bits 23, 17, 7, 1 Reserved, must be kept at reset value.

Bits 22, 16, 6, 0 **CFEIFx**: Stream x clear FIFO error interrupt flag (x = 3..0)
Writing 1 to this bit clears the corresponding CFEIFx flag in the DMA_LISR register

10.5.4 DMA high interrupt flag clear register (DMA_HIFCR)

Address offset: 0x0C

Reset value: 0x0000 0000

31	30	29	28	27	26	25	24	23	22	21	20	19	18	17	16
Reserved				CTCIF7	CHTIF7	CTEIF7	CDMEIF7	Reserved	CFEIF7	CTCIF6	CHTIF6	CTEIF6	CDMEIF6	Reserved	CFEIF6
				w	w	w	w		w	w	w	w	w		w

15	14	13	12	11	10	9	8	7	6	5	4	3	2	1	0
Reserved				CTCIF5	CHTIF5	CTEIF5	CDMEIF5	Reserved	CFEIF5	CTCIF4	CHTIF4	CTEIF4	CDMEIF4	Reserved	CFEIF4
				w	w	w	w		w	w	w	w	w		w

Bits 31:28, 15:12 Reserved, must be kept at reset value.

Bits 27, 21, 11, 5 **CTCIFx**: Stream x clear transfer complete interrupt flag (x = 7..4)
Writing 1 to this bit clears the corresponding TCIFx flag in the DMA_HISR register

Bits 26, 20, 10, 4 **CHTIFx**: Stream x clear half transfer interrupt flag (x = 7..4)
Writing 1 to this bit clears the corresponding HTIFx flag in the DMA_HISR register

Bits 25, 19, 9, 3 **CTEIFx**: Stream x clear transfer error interrupt flag (x = 7..4)
Writing 1 to this bit clears the corresponding TEIFx flag in the DMA_HISR register

Bits 24, 18, 8, 2 **CDMEIFx**: Stream x clear direct mode error interrupt flag (x = 7..4)
Writing 1 to this bit clears the corresponding DMEIFx flag in the DMA_HISR register

Bits 23, 17, 7, 1 Reserved, must be kept at reset value.

Bits 22, 16, 6, 0 **CFEIFx**: Stream x clear FIFO error interrupt flag (x = 7..4)
Writing 1 to this bit clears the corresponding CFEIFx flag in the DMA_HISR register

10.5.5 DMA stream x configuration register (DMA_SxCR) (x = 0..7)

This register is used to configure the concerned stream.

Address offset: 0x10 + 0x18 × *stream number*

Reset value: 0x0000 0000

31	30	29	28	27	26	25	24	23	22	21	20	19	18	17	16
Reserved				CHSEL[2:0]			MBURST [1:0]		PBURST[1:0]		Reser-ved	CT	DBM	PL[1:0]	
				rw	rw	rw	rw	rw	rw	rw		rw	rw	rw	rw

15	14	13	12	11	10	9	8	7	6	5	4	3	2	1	0
PINCOS	MSIZE[1:0]		PSIZE[1:0]		MINC	PINC	CIRC	DIR[1:0]		PFCTRL	TCIE	HTIE	TEIE	DMEIE	EN
rw	rw	rw	rw	rw	rw	rw	rw	rw	rw	rw	rw	rw	rw	rw	rw

Bits 31:28 Reserved, must be kept at reset value.

Bits 27:25 **CHSEL[2:0]**: Channel selection
These bits are set and cleared by software.
000: channel 0 selected
001: channel 1 selected
010: channel 2 selected
011: channel 3 selected
100: channel 4 selected
101: channel 5 selected
110: channel 6 selected
111: channel 7 selected
These bits are protected and can be written only if EN is ‘0’

Bits 24:23 **MBURST**: Memory burst transfer configuration
These bits are set and cleared by software.
00: single transfer
01: INCR4 (incremental burst of 4 beats)
10: INCR8 (incremental burst of 8 beats)
11: INCR16 (incremental burst of 16 beats)
These bits are protected and can be written only if EN is ‘0’
In direct mode, these bits are forced to 0x0 by hardware as soon as bit EN= '1'.

Bits 22:21 **PBURST[1:0]**: Peripheral burst transfer configuration
These bits are set and cleared by software.
00: single transfer
01: INCR4 (incremental burst of 4 beats)
10: INCR8 (incremental burst of 8 beats)
11: INCR16 (incremental burst of 16 beats)
These bits are protected and can be written only if EN is ‘0’
In direct mode, these bits are forced to 0x0 by hardware.

Bit 20 Reserved, must be kept at reset value.

Bit 19 **CT**: Current target (only in double buffer mode)

This bits is set and cleared by hardware. It can also be written by software.

0: The current target memory is Memory 0 (addressed by the DMA_SxM0AR pointer)
1: The current target memory is Memory 1 (addressed by the DMA_SxM1AR pointer)
This bit can be written only if EN is ‘0’ to indicate the target memory area of the first transfer. Once the stream is enabled, this bit operates as a status flag indicating which memory area is the current target.

Bit 18 **DBM**: Double buffer mode

This bits is set and cleared by software.
0: No buffer switching at the end of transfer
1: Memory target switched at the end of the DMA transfer
This bit is protected and can be written only if EN is ‘0’.

Bits 17:16 **PL[1:0]**: Priority level

These bits are set and cleared by software.
00: Low
01: Medium
10: High
11: Very high
These bits are protected and can be written only if EN is ‘0’.

Bit 15 **PINCOS**: Peripheral increment offset size

This bit is set and cleared by software
0: The offset size for the peripheral address calculation is linked to the PSIZE
1: The offset size for the peripheral address calculation is fixed to 4 (32-bit alignment).
This bit has no meaning if bit PINC = '0'.
This bit is protected and can be written only if EN = '0'.
This bit is forced low by hardware when the stream is enabled (bit EN = '1') if the direct mode is selected or if PBURST are different from “00”.

Bits 14:13 **MSIZE[1:0]**: Memory data size

These bits are set and cleared by software.
00: byte (8-bit)
01: half-word (16-bit)
10: word (32-bit)
11: reserved
These bits are protected and can be written only if EN is ‘0’.
In direct mode, MSIZE is forced by hardware to the same value as PSIZE as soon as bit EN = '1'.

Bits 12:11 **PSIZE[1:0]**: Peripheral data size

These bits are set and cleared by software.
00: Byte (8-bit)
01: Half-word (16-bit)
10: Word (32-bit)
11: reserved
These bits are protected and can be written only if EN is ‘0’

Bit 10 **MINC**: Memory increment mode

This bit is set and cleared by software.
0: Memory address pointer is fixed
1: Memory address pointer is incremented after each data transfer (increment is done according to MSIZE)
This bit is protected and can be written only if EN is ‘0’.

Bit 9 **PINC**: Peripheral increment mode

This bit is set and cleared by software.
0: Peripheral address pointer is fixed
1: Peripheral address pointer is incremented after each data transfer (increment is done according to PSIZE)
This bit is protected and can be written only if EN is ‘0’.

Bit 8 **CIRC**: Circular mode

This bit is set and cleared by software and can be cleared by hardware.
0: Circular mode disabled
1: Circular mode enabled
When the peripheral is the flow controller (bit PFCTRL=1) and the stream is enabled (bit EN=1), then this bit is automatically forced by hardware to 0.
It is automatically forced by hardware to 1 if the DBM bit is set, as soon as the stream is enabled (bit EN ='1').

Bits 7:6 **DIR[1:0]**: Data transfer direction

These bits are set and cleared by software.
00: Peripheral-to-memory
01: Memory-to-peripheral
10: Memory-to-memory
11: reserved
These bits are protected and can be written only if EN is ‘0’.

Bit 5 **PFCTRL**: Peripheral flow controller

This bit is set and cleared by software.
0: The DMA is the flow controller
1: The peripheral is the flow controller
This bit is protected and can be written only if EN is ‘0’.
When the memory-to-memory mode is selected (bits DIR[1:0]=10), then this bit is automatically forced to 0 by hardware.

Bit 4 **TCIE**: Transfer complete interrupt enable

This bit is set and cleared by software.
0: TC interrupt disabled
1: TC interrupt enabled

Bit 3 **HTIE**: Half transfer interrupt enable

This bit is set and cleared by software.
0: HT interrupt disabled
1: HT interrupt enabled

Bit 2 **TEIE**: Transfer error interrupt enable

This bit is set and cleared by software.
0: TE interrupt disabled
1: TE interrupt enabled

Bit 1 **DMEIE**: Direct mode error interrupt enable

This bit is set and cleared by software.
0: DME interrupt disabled
1: DME interrupt enabled

Bit 0 **EN**: Stream enable / flag stream ready when read low

This bit is set and cleared by software.

0: Stream disabled

1: Stream enabled

This bit may be cleared by hardware:

- on a DMA end of transfer (stream ready to be configured)
- if a transfer error occurs on the AHB master buses
- when the FIFO threshold on memory AHB port is not compatible with the size of the burst

When this bit is read as 0, the software is allowed to program the Configuration and FIFO bits registers. It is forbidden to write these registers when the EN bit is read as 1.

Note: Before setting EN bit to '1' to start a new transfer, the event flags corresponding to the stream in DMA_LISR or DMA_HISR register must be cleared.

10.5.6 DMA stream x number of data register (DMA_SxNDTR) (x = 0..7)

Address offset: 0x14 + 0x18 × *stream number*

Reset value: 0x0000 0000

31	30	29	28	27	26	25	24	23	22	21	20	19	18	17	16
Reserved															
15	14	13	12	11	10	9	8	7	6	5	4	3	2	1	0
NDT[15:0]															
rw	rw	rw	rw	rw	rw	rw	rw	rw	rw	rw	rw	rw	rw	rw	rw

Bits 31:16 Reserved, must be kept at reset value.

Bits 15:0 **NDT[15:0]**: Number of data items to transfer

Number of data items to be transferred (0 up to 65535). This register can be written only when the stream is disabled. When the stream is enabled, this register is read-only, indicating the remaining data items to be transmitted. This register decrements after each DMA transfer.

Once the transfer has completed, this register can either stay at zero (when the stream is in normal mode) or be reloaded automatically with the previously programmed value in the following cases:

- when the stream is configured in Circular mode.
- when the stream is enabled again by setting EN bit to '1'

If the value of this register is zero, no transaction can be served even if the stream is enabled.

10.5.7 DMA stream x peripheral address register (DMA_SxPAR) (x = 0..7)

Address offset: 0x18 + 0x18 × *stream number*

Reset value: 0x0000 0000

31	30	29	28	27	26	25	24	23	22	21	20	19	18	17	16
PAR[31:16]															
rw	rw	rw	rw	rw	rw	rw	rw	rw	rw	rw	rw	rw	rw	rw	rw
15	14	13	12	11	10	9	8	7	6	5	4	3	2	1	0
PAR[15:0]															
rw	rw	rw	rw	rw	rw	rw	rw	rw	rw	rw	rw	rw	rw	rw	rw

Bits 31:0 **PAR[31:0]**: Peripheral address

Base address of the peripheral data register from/to which the data will be read/written.

These bits are write-protected and can be written only when bit EN = '0' in the DMA_SxCR register.

10.5.8 DMA stream x memory 0 address register (DMA_SxM0AR) (x = 0..7)

Address offset: 0x1C + 0x18 × *stream number*

Reset value: 0x0000 0000

31	30	29	28	27	26	25	24	23	22	21	20	19	18	17	16
M0A[31:16]															
rw	rw	rw	rw	rw	rw	rw	rw	rw	rw	rw	rw	rw	rw	rw	rw
15	14	13	12	11	10	9	8	7	6	5	4	3	2	1	0
M0A[15:0]															
rw	rw	rw	rw	rw	rw	rw	rw	rw	rw	rw	rw	rw	rw	rw	rw

Bits 31:0 **M0A[31:0]**: Memory 0 address

Base address of Memory area 0 from/to which the data will be read/written.

These bits are write-protected. They can be written only if:

- the stream is disabled (bit EN= '0' in the DMA_SxCR register) or
- the stream is enabled (EN='1' in DMA_SxCR register) and bit CT = '1' in the DMA_SxCR register (in Double buffer mode).

10.5.9 DMA stream x memory 1 address register (DMA_SxM1AR) (x = 0..7)

Address offset: 0x20 + 0x18 × *stream number*

Reset value: 0x0000 0000

31	30	29	28	27	26	25	24	23	22	21	20	19	18	17	16
M1A[31:16]															
rw	rw	rw	rw	rw	rw	rw	rw	rw	rw	rw	rw	rw	rw	rw	rw
15	14	13	12	11	10	9	8	7	6	5	4	3	2	1	0
M1A[15:0]															
rw	rw	rw	rw	rw	rw	rw	rw	rw	rw	rw	rw	rw	rw	rw	rw

Bits 31:0 **M1A[31:0]**: Memory 1 address (used in case of Double buffer mode)

Base address of Memory area 1 from/to which the data will be read/written.

This register is used only for the Double buffer mode.

These bits are write-protected. They can be written only if:

- the stream is disabled (bit EN= '0' in the DMA_SxCR register) or
- the stream is enabled (EN='1' in DMA_SxCR register) and bit CT = '0' in the DMA_SxCR register.

10.5.10 DMA stream x FIFO control register (DMA_SxFCR) (x = 0..7)

Address offset: 0x24 + 0x24 × *stream number*

Reset value: 0x0000 0021

31	30	29	28	27	26	25	24	23	22	21	20	19	18	17	16
Reserved															
15	14	13	12	11	10	9	8	7	6	5	4	3	2	1	0
Reserved								FEIE	Reserved	FS[2:0]			DMDIS	FTH[1:0]	
								rw		r	r	r	rw	rw	rw

Bits 31:8 Reserved, must be kept at reset value.

Bit 7 **FEIE**: FIFO error interrupt enable

This bit is set and cleared by software.

0: FE interrupt disabled

1: FE interrupt enabled

Bit 6 Reserved, must be kept at reset value.

Bits 5:3 **FS[2:0]**: FIFO status

These bits are read-only.

000: 0 < fifo_level < 1/4

001: 1/4 ≤ fifo_level < 1/2

010: 1/2 ≤ fifo_level < 3/4

011: 3/4 ≤ fifo_level < full

100: FIFO is empty

101: FIFO is full

others: no meaning

These bits are not relevant in the direct mode (DMDIS bit is zero).

Bit 2 **DMDIS**: Direct mode disable

This bit is set and cleared by software. It can be set by hardware.

0: Direct mode enabled

1: Direct mode disabled

This bit is protected and can be written only if EN is ‘0’.

This bit is set by hardware if the memory-to-memory mode is selected (DIR bit in DMA_SxCR are “10”) and the EN bit in the DMA_SxCR register is ‘1’ because the direct mode is not allowed in the memory-to-memory configuration.

Bits 1:0 **FTH[1:0]**: FIFO threshold selection

These bits are set and cleared by software.

00: 1/4 full FIFO

01: 1/2 full FIFO

10: 3/4 full FIFO

11: full FIFO

These bits are not used in the direct mode when the DMIS value is zero.

These bits are protected and can be written only if EN is ‘0’.

10.5.11 DMA register map

Table 51 summarizes the DMA registers.

Table 51. DMA register map and reset values

Offset	Register	31	30	29	28	27	26	25	24	23	22	21	20	19	18	17	16	15	14	13	12	11	10	9	8	7	6	5	4	3	2	1	0
0x0000	DMA_LISR	Reserved				TCIF3	HTIF3	TEIF3	DMEIF3	Reserved	FEIF3	TCIF2	HTIF2	TEIF2	DMEIF2	Reserved	FEIF2	Reserved				TCIF1	HTIF1	TEIF1	DMEIF1	Reserved	FEIF1	TCIF0	HTIF0	TEIF0	DMEIF0	Reserved	FEIF0
	Reset value					0	0	0	0		0	0	0	0	0		0					0	0	0	0		0	0	0	0	0		0
0x0004	DMA_HISR	Reserved				TCIF7	HTIF7	TEIF7	DMEIF7	Reserved	FEIF7	TCIF6	HTIF6	TEIF6	DMEIF6	Reserved	FEIF6	Reserved				TCIF5	HTIF5	TEIF5	DMEIF5	Reserved	FEIF5	TCIF4	HTIF4	TEIF4	DMEIF4	Reserved	FEIF4
	Reset value					0	0	0	0		0	0	0	0	0		0					0	0	0	0		0	0	0	0	0		0
0x0008	DMA_LIFCR	Reserved				CTCIF3	CHTIF3	TEIF3	CDMEIF3	Reserved	CFEIF3	CTCIF2	CHTIF2	CTEIF2	CDMEIF2	Reserved	CFEIF2	Reserved				CTCIF1	CHTIF1	CTEIF1	CDMEIF1	Reserved	CFEIF1	CTCIF0	CHTIF0	CTEIF0	CDMEIF0	Reserved	CFEIF0
	Reset value					0	0	0	0		0	0	0	0	0	Reserved	0					0	0	0	0	Reserved	0	0	0	0	0	Reserved	0
0x000C	DMA_HIFCR	Reserved				CTCIF7	CHTIF7	CTEIF7	CDMEIF7	Reserved	CFEIF7	CTCIF6	CHTIF6	CTEIF6	CDMEIF6	-	CFEIF6	Reserved				CTCIF5	CHTIF5	CTEIF5	CDMEIF5	-	CFEIF5	CTCIF4	CHTIF4	CTEIF4	CDMEIF4	-	CFEIF4
	Reset value					0	0	0	0		0	0	0	0	0	-	0					0	0	0	0	-	0	0	0	0	0	-	0
0x0010	DMA_S0CR	Reserved				CHSEL[2:0]			MBURST[1:0]		PBURST[1:0]		Reserved	CT	DBM	PL[1:0]		PINCOS	MSIZE[1:0]		PSIZE[1:0]		MINC	PINC	CIRC	DIR[1:0]		PFCTRL	TCIE	HTIE	TEIE	DMEIE	EN
	Reset value					0	0	0	0	0	0	0		0	0	0	0	0	0	0	0	0	0	0	0	0	0	0	0	0	0	0	0
0x0014	DMA_S0NDTR	Reserved																NDT[15:.]															
	Reset value																	0	0	0	0	0	0	0	0	0	0	0	0	0	0	0	0
0x0018	DMA_S0PAR	PA[31:0]																															
	Reset value	0	0	0	0	0	0	0	0	0	0	0	0	0	0	0	0	0	0	0	0	0	0	0	0	0	0	0	0	0	0	0	0
0x001C	DMA_S0M0AR	M0A[31:0]																															
	Reset value	0	0	0	0	0	0	0	0	0	0	0	0	0	0	0	0	0	0	0	0	0	0	0	0	0	0	0	0	0	0	0	0
0x0020	DMA_S0M1AR	M1A[31:0]																															
	Reset value	0	0	0	0	0	0	0	0	0	0	0	0	0	0	0	0	0	0	0	0	0	0	0	0	0	0	0	0	0	0	0	0
0x0024	DMA_S0FCR	Reserved																								FEIE	Reserved	FS[2:0]			DMDIS	FTH [1:0]	
	Reset value																									0		1	0	0	0	0	1
0x0028	DMA_S1CR	Reserved				CHSEL [2:0]			MBURST[1:]		PBURST[1:0]		Reserved	CT	DBM	PL[1:0]		PINCOS	MSIZE[1:0]		PSIZE[1:0]		MINC	PINC	CIRC	DIR[1:0]		PFCTRL	TCIE	HTIE	TEIE	DMEIE	EN
	Reset value					0	0	0	0	0	0	0		0	0	0	0	0	0	0	0	0	0	0	0	0	0	0	0	0	0	0	0
0x002C	DMA_S1NDTR	Reserved																NDT[15:.]															
	Reset value																	0	0	0	0	0	0	0	0	0	0	0	0	0	0	0	0

Table 51. DMA register map and reset values (continued)

Offset	Register	31	30	29	28	27	26	25	24	23	22	21	20	19	18	17	16	15	14	13	12	11	10	9	8	7	6	5	4	3	2	1	0
0x0030	**DMA_S1PAR**	PA[31:0]																															
	Reset value	0	0	0	0	0	0	0	0	0	0	0	0	0	0	0	0	0	0	0	0	0	0	0	0	0	0	0	0	0	0	0	0
0x0034	**DMA_S1M0A**R	M0A[31:0]																															
	Reset value	0	0	0	0	0	0	0	0	0	0	0	0	0	0	0	0	0	0	0	0	0	0	0	0	0	0	0	0	0	0	0	0
0x0038	**DMA_S1M1AR**	M1A[31:0]																															
	Reset value	0	0	0	0	0	0	0	0	0	0	0	0	0	0	0	0	0	0	0	0	0	0	0	0	0	0	0	0	0	0	0	0
0x003C	**DMA_S1FCR**	Reserved																								FEIE	Reserved	FS[2:0]			DMDIS	FTH [1:0]	
	Reset value																									0		1	0	0	0	0	1
0x0040	**DMA_S2CR**	Reserved				CHSEL [2:0]			MBURST[1:0]		PBURST[1:0]		Reserved	CT	DBM	PL[1:0]		PINCOS	MSIZE[1:0]		PSIZE[1:0]		MINC	PINC	CIRC	DIR [1:0]		PFCTRL	TCIE	HTIE	TEIE	DMEIE	EN
	Reset value					0	0	0	0	0	0	0		0	0	0	0	0	0	0	0	0	0	0	0	0	0	0	0	0	0	0	0
0x0044	**DMA_S2NDTR**	Reserved																NDT[15:.]															
	Reset value																	0	0	0	0	0	0	0	0	0	0	0	0	0	0	0	0
0x0048	**DMA_S2PAR**	PA[31:0]																															
	Reset value	0	0	0	0	0	0	0	0	0	0	0	0	0	0	0	0	0	0	0	0	0	0	0	0	0	0	0	0	0	0	0	0
0x004C	**DMA_S2M0AR**	M0A[31:0]																															
	Reset value	0	0	0	0	0	0	0	0	0	0	0	0	0	0	0	0	0	0	0	0	0	0	0	0	0	0	0	0	0	0	0	0
0x0050	**DMA_S2M1AR**	M1A[31:0]																															
	Reset value	0	0	0	0	0	0	0	0	0	0	0	0	0	0	0	0	0	0	0	0	0	0	0	0	0	0	0	0	0	0	0	0
0x0054	**DMA_S2FCR**	Reserved																								FEIE	Reserved	FS[2:0]			DMDIS	FTH [1:0]	
	Reset value																									0		1	0	0	0	0	1
0x0058	**DMA_S3CR**	Reserved				CHSEL[2:0]			MBURST[1:0]		PBURST[1:0]		Reserved	CT	DBM	PL[1:0]		PINCOS	MSIZE[1:0]		PSIZE[1:0]		MINC	PINC	CIRC	DIR[1:0]		PFCTRL	TCIE	HTIE	TEIE	DMEIE	EN
	Reset value					0	0	0	0	0	0	0		0	0	0	0	0	0	0	0	0	0	0	0	0	0	0	0	0	0	0	0
0x005C	**DMA_S3NDTR**	Reserved																NDT[15:.]															
	Reset value																	0	0	0	0	0	0	0	0	0	0	0	0	0	0	0	0
0x0060	**DMA_S3PAR**	PA[31:0]																															
	Reset value	0	0	0	0	0	0	0	0	0	0	0	0	0	0	0	0	0	0	0	0	0	0	0	0	0	0	0	0	0	0	0	0
0x0064	**DMA_S3M0AR**	M0A[31:0]																															
	Reset value	0	0	0	0	0	0	0	0	0	0	0	0	0	0	0	0	0	0	0	0	0	0	0	0	0	0	0	0	0	0	0	0

Table 51. DMA register map and reset values (continued)

Offset	Register	31	30	29	28	27	26	25	24	23	22	21	20	19	18	17	16	15	14	13	12	11	10	9	8	7	6	5	4	3	2	1	0
0x0068	**DMA_S3M1AR**	M1A[31:0]																															
	Reset value	0	0	0	0	0	0	0	0	0	0	0	0	0	0	0	0	0	0	0	0	0	0	0	0	0	0	0	0	0	0	0	0
0x006C	**DMA_S3FCR**	Reserved																								FEIE	Reserved	FS[2:0]			DMDIS	FTH [1:0]	
	Reset value																									0		1	0	0	0	0	1
0x0070	**DMA_S4CR**	Reserved				CHSEL[2:0]			MBURST[1:0]		PBURST[1:0]		Reserved	CT	DBM	PL[1:0]		PINCOS	MSIZE[1:0]		PSIZE[1:0]		MINC	PINC	CIRC	DIR [1:0]		PFCTRL	TCIE	HTIE	TEIE	DMEIE	EN
	Reset value					0	0	0	0	0	0	0		0	0	0	0	0	0	0	0	0	0	0	0	0	0	0	0	0	0	0	0
0x0074	**DMA_S4NDTR**	Reserved																NDT[15:.]															
	Reset value																	0	0	0	0	0	0	0	0	0	0	0	0	0	0	0	0
0x0078	**DMA_S4PAR**	PA[31:0]																															
	Reset value	0	0	0	0	0	0	0	0	0	0	0	0	0	0	0	0	0	0	0	0	0	0	0	0	0	0	0	0	0	0	0	0
0x007C	**DMA_S4M0AR**	M0A[31:0]																															
	Reset value	0	0	0	0	0	0	0	0	0	0	0	0	0	0	0	0	0	0	0	0	0	0	0	0	0	0	0	0	0	0	0	0
0x0080	**DMA_S4M1AR**	M1A[31:0]																															
	Reset value	0	0	0	0	0	0	0	0	0	0	0	0	0	0	0	0	0	0	0	0	0	0	0	0	0	0	0	0	0	0	0	0
0x0084	**DMA_S4FCR**	Reserved																								FEIE	Reserved	FS[2:0]			DMDIS	FTH [1:0]	
	Reset value																									0		1	0	0	0	0	1
0x0088	**DMA_S5CR**	Reserved				CHSEL[2:0]			MBURST[1:0]		PBURST[1:0]		Reserved	CT	DBM	PL[1:0]		PINCOS	MSIZE[1:0]		PSIZE[1:0]		MINC	PINC	CIRC	DIR[1:0]		PFCTRL	TCIE	HTIE	TEIE	DMEIE	EN
	Reset value					0	0	0	0	0	0	0		0	0	0	0	0	0	0	0	0	0	0	0	0	0	0	0	0	0	0	0
0x008C	**DMA_S5NDTR**	Reserved																NDT[15:.]															
	Reset value																	0	0	0	0	0	0	0	0	0	0	0	0	0	0	0	0
0x0090	**DMA_S5PAR**	PA[31:0]																															
	Reset value	0	0	0	0	0	0	0	0	0	0	0	0	0	0	0	0	0	0	0	0	0	0	0	0	0	0	0	0	0	0	0	0
0x0094	**DMA_S5M0AR**	M0A[31:0]																															
	Reset value	0	0	0	0	0	0	0	0	0	0	0	0	0	0	0	0	0	0	0	0	0	0	0	0	0	0	0	0	0	0	0	0
0x0098	**DMA_S5M1AR**	M1A[31:0]																															
	Reset value	0	0	0	0	0	0	0	0	0	0	0	0	0	0	0	0	0	0	0	0	0	0	0	0	0	0	0	0	0	0	0	0
0x009C	**DMA_S5FCR**	Reserved																								FEIE	Reserved	FS[2:0]			DMDIS	FTH [1:0]	
	Reset value																									0		1	0	0	0	0	1
0x00A0	**DMA_S6CR**	Reserved				CHSEL[2:0]			MBURST[1:0]		PBURST[1:0]		Reserved	CT	DBM	PL[1:0]		PINCOS	MSIZE[1:0]		PSIZE[1:0]		MINC	PINC	CIRC	DIR[1:0]		PFCTRL	TCIE	HTIE	TEIE	DMEIE	EN
	Reset value					0	0	0	0	0	0	0		0	0	0	0	0	0	0	0	0	0	0	0	0	0	0	0	0	0	0	0
0x00A4	**DMA_S6NDTR**	Reserved																NDT[15:.]															
	Reset value																	0	0	0	0	0	0	0	0	0	0	0	0	0	0	0	0
0x00A8	**DMA_S6PAR**	PA[31:0]																															
	Reset value	0	0	0	0	0	0	0	0	0	0	0	0	0	0	0	0	0	0	0	0	0	0	0	0	0	0	0	0	0	0	0	0

Table 51. DMA register map and reset values (continued)

Offset	Register	31	30	29	28	27	26	25	24	23	22	21	20	19	18	17	16	15	14	13	12	11	10	9	8	7	6	5	4	3	2	1	0
0x00AC	**DMA_S6M0AR**	M0A[31:0]																															
	Reset value	0	0	0	0	0	0	0	0	0	0	0	0	0	0	0	0	0	0	0	0	0	0	0	0	0	0	0	0	0	0	0	0
0x00B0	**DMA_S6M1AR**	M1A[31:0]																															
	Reset value	0	0	0	0	0	0	0	0	0	0	0	0	0	0	0	0	0	0	0	0	0	0	0	0	0	0	0	0	0	0	0	0
0x00B4	**DMA_S6FCR**	Reserved																								FEIE	Reserved	FS[2:0]			DMDIS	FTH [1:0]	
	Reset value																									0		1	0	0	0	0	1
0x00B8	**DMA_S7CR**	Reserved				CHSEL[2:0]			MBURST[1:0]		PBURST[1:0]		Reserved	CT	DBM	PL[1:0]		PINCOS	MSIZE[1:0]		PSIZE[1:0]		MINC	PINC	CIRC	DIR[1:0]		PFCTRL	TCIE	HTIE	TEIE	DMEIE	EN
	Reset value					0	0	0	0	0	0	0		0	0	0	0	-	0	0	0	0	0	0	0	0	0	0	0	0	0	0	0
0x00BC	**DMA_S7NDTR**	Reserved																NDT[15:.]															
	Reset value																	0	0	0	0	0	0	0	0	0	0	0	0	0	0	0	0
0x00C0	**DMA_S7PAR**	PA[31:0]																															
	Reset value	0	0	0	0	0	0	0	0	0	0	0	0	0	0	0	0	0	0	0	0	0	0	0	0	0	0	0	0	0	0	0	0
0x00C4	**DMA_S7M0AR**	M0A[31:0]																															
	Reset value	0	0	0	0	0	0	0	0	0	0	0	0	0	0	0	0	0	0	0	0	0	0	0	0	0	0	0	0	0	0	0	0
0x00C8	**DMA_S7M1AR**	M1A[31:0]																															
	Reset value	0	0	0	0	0	0	0	0	0	0	0	0	0	0	0	0	0	0	0	0	0	0	0	0	0	0	0	0	0	0	0	0
0x00CC	**DMA_S7FCR**	Reserved																								FEIE	Reserved	FS[2:0]			DMDIS	FTH [1:0]	
	Reset value																									0		1	0	0	0	0	1

Refer to *Section 2.3: Memory map* for the register boundary addresses.

11 Chrom-Art Accelerator™ controller (DMA2D)

11.1 DMA2D introduction

The Chrom-Art Accelerator™ (DMA2D) is a specialized DMA dedicated to image manipulation. It can perform the following operations:

- Filling a part or the whole of a destination image with a specific color
- Copying a part or the whole of a source image into a part or the whole of a destination image
- Copying a part or the whole of a source image into a part or the whole of a destination image with a pixel format conversion
- Blending a part and/or two complete source images with different pixel format and copy the result into a part or the whole of a destination image with a different color format.

All the classical color coding schemes are supported from 4-bit up to 32-bit per pixel with indexed or direct color mode. The DMA2D has its own dedicated memories for CLUTs (color look-up tables).

11.2 DMA2D main features

The main DMA2D features are:

- Single AHB master bus architecture.
- AHB slave programming interface supporting 8/16/32-bit accesses (except for CLUT accesses which are 32-bit).
- User programmable working area size
- User programmable offset for sources and destination areas
- User programmable sources and destination addresses on the whole memory space
- Up to 2 sources with blending operation
- Alpha value can be modified (source value, fixed value or modulated value)
- User programmable source and destination color format
- Up to 11 color formats supported from 4-bit up to 32-bit per pixel with indirect or direct color coding
- 2 internal memories for CLUT storage in indirect color mode
- Automatic CLUT loading or CLUT programming via the CPU
- User programmable CLUT size
- Internal timer to control AHB bandwidth
- 4 operating modes: register-to-memory, memory-to-memory, memory-to-memory with pixel format conversion, and memory-to-memory with pixel format conversion and blending
- Area filling with a fixed color
- Copy from an area to another
- Copy with pixel format conversion between source and destination images
- Copy from two sources with independent color format and blending
- Abort and suspend of DMA2D operations
- Watermark interrupt on a user programmable destination line
- Interrupt generation on bus error or access conflict
- Interrupt generation on process completion

11.3 DMA2D functional description

11.3.1 General description

The DMA2D controller performs direct memory transfer. As an AHB master, it can take the control of the AHB bus matrix to initiate AHB transactions.

The DMA2D can operate in the following modes:

- Register-to-memory
- Memory-to-memory
- Memory-to-memory with Pixel Format Conversion
- Memory-to-memory with Pixel Format Conversion and Blending

The AHB slave port is used to program the DMA2D controller.

The block diagram of the DMA2D is shown in *Figure 40: DMA2D block diagram*.

Figure 40. DMA2D block diagram

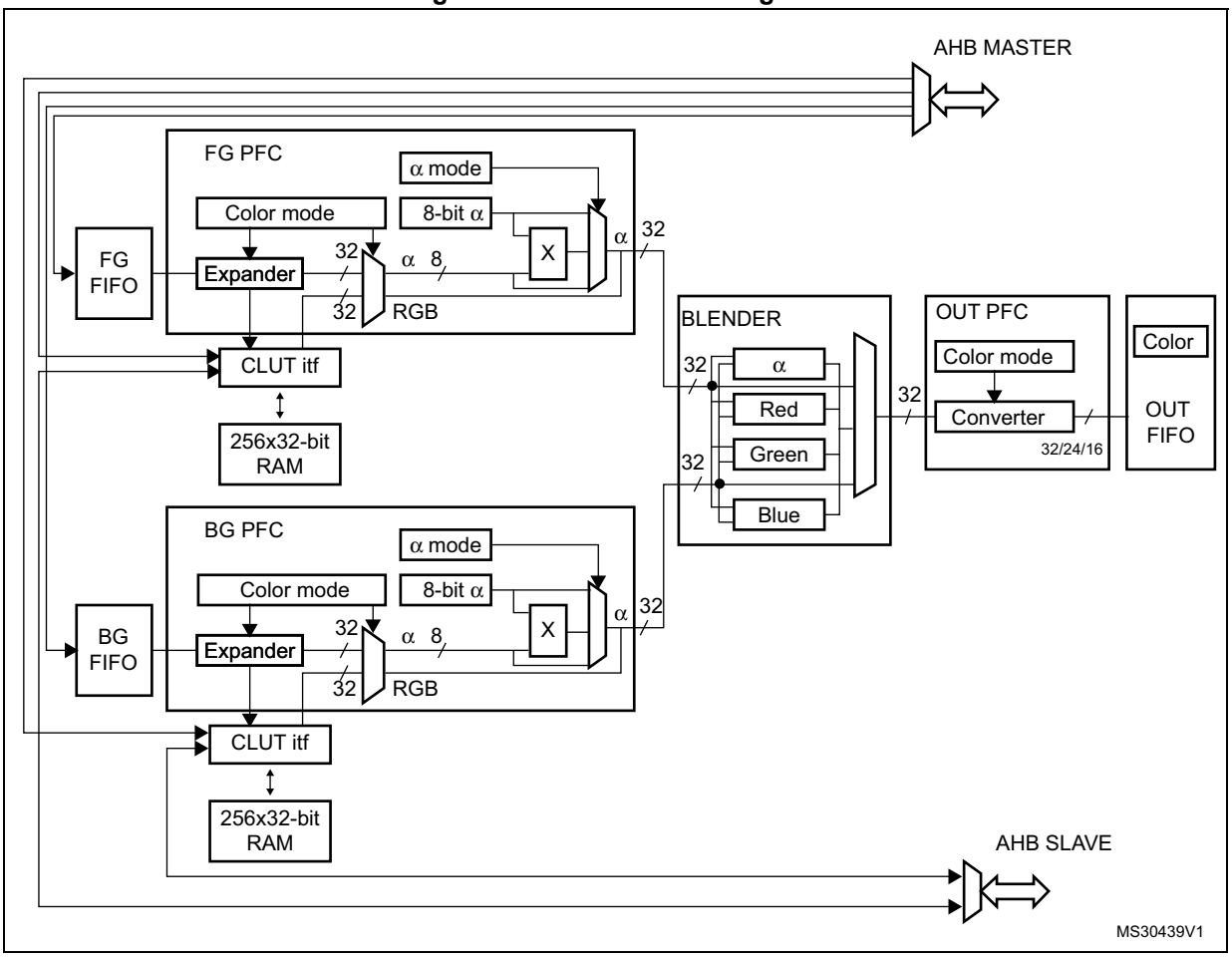

11.3.2 DMA2D control

The DMA2D controller is configured through the DMA2D Control Register (DMA2D_CR) which allows selecting:

The user application can perform the following operations:

- Select the operating mode
- Enable/disable the DMA2D interrupt
- Start/suspend/abort ongoing data transfers

11.3.3 DMA2D foreground and background FIFOs

The DMA2D foreground (FG) FG FIFO and background (BG) FIFO fetch the input data to be copied and/or processed.

The FIFOs fetch the pixels according to the color format defined in their respective pixel format converter (PFC).

They are programmed through a set of control registers:

- DMA2D foreground memory address register (DMA2D_FGMAR)
- DMA2D foreground offset register (DMA2D_FGOR)
- DMA2D background memory address register (DMA2D_BGMAR)
- DMA2D background offset register (DMA2D_BGBOR)
- DMA2D number of lines register (number of lines and pixel per lines) (DMA2D_NLR)

When the DMA2D operates in register-to-memory mode, none of the FIFOs is activated.

When the DMA2D operates in memory-to-memory mode (no pixel format conversion nor blending operation), only the FG FIFO is activated and acts as a buffer.

When the DMA2D operates in memory-to-memory operation with pixel format conversion (no blending operation), the BG FIFO is not activated.

11.3.4 DMA2D foreground and background pixel format converter (PFC)

DMA2D foreground pixel format converter (PFC) and background pixel format converter perform the pixel format conversion to generate a 32-bit per pixel value. The PFC can also modify the alpha channel.

The first stage of the converter converts the color format. The original color format of the foreground pixel and background pixels are configured through the CM[3:0] bits of the DMA2D_FGPFCCR and DMA2D_BGPFCCR, respectively.

The supported input formats are given in *Table 52: Supported color mode in input*.

Table 52. Supported color mode in input

CM[3:0]	Color mode
0000	ARGB8888
0001	RGB888
0010	RGB565
0011	ARGB1555
0100	ARGB4444
0101	L8
0110	AL44
0111	AL88
1000	L4
1001	A8
1010	A4

The color format are coded as follows:

- Alpha value field: transparency
  0xFF value corresponds to an opaque pixel and 0x00 to a transparent one.
- R field for Red
- G field for Green
- B field for Blue
- L field: luminance
  This field is the index to a CLUT to retrieve the three/four RGB/ARGB components.

If the original format was direct color mode, then the extension to 8-bit per channel is performed by copying the MSBs into the LSBs. This ensures a perfect linearity of the conversion.

If the original format does not include an alpha channel, the alpha value is automatically set to 0xFF (opaque).

If the original format is indirect color mode, a CLUT is required and each pixel format converter is associated with a 256 entry 32-bit CLUT.

For the specific alpha mode A4 and A8, no color information is stored nor indexed. The color to be used for the image generation is fixed and is defined in the DMA2D_FGCOLR for foreground pixels and in the DMA2D_BGCOLR register for background pixels.

The order of the fields in the system memory is defined in *Table 53: Data order in memory*.

Table 53. Data order in memory

Color Mode	@ + 3	@ + 2	@ + 1	@ + 0
ARGB8888	A_0[7:0]	R_0[7:0]	G_0[7:0]	B_0[7:0]
RGB888	B_1[7:0]	R_0[7:0]	G_0[7:0]	B_0[7:0]
	G_2[7:0]	B_2[7:0]	R_1[7:0]	G_1[7:0]
	R_3[7:0]	G_3[7:0]	B_3[7:0]	R_2[7:0]
RGB565	R_1[4:0]G_1[5:3]	G_1[2:0]B_1[4:0]	R_0[4:0]G_0[5:3]	G_0[2:0]B_0[4:0]
ARGB1555	A_1[0]R_1[4:0]G_1[4:3]	G_1[2:0]B_1[4:0]	A_0[0]R_0[4:0]G_0[4:3]	G_0[2:0]B_0[4:0]
ARGB4444	A_1[3:0]R_1[3:0]	G_1[3:0]B_1[3:0]	A_0[3:0]R_0[3:0]	G_0[3:0]B_0[3:0]
L8	L_3[7:0]	L_2[7:0]	L_1[7:0]	L_0[7:0]
AL44	A_3[3:0]L_3[3:0]	A_2[3:0]L_2[3:0]	A_1[3:0]L_1[3:0]	A_0[3:0]L_0[3:0]
AL88	A_1[7:0]	L_1[7:0]	A_0[7:0]	L_0[7:0]
L4	L_7[3:0]L_6[3:0]	L_5[3:0]L_4[3:0]	L_3[3:0]L_2[3:0]	L_1[3:0]L_0[3:0]
A8	A_3[7:0]	A_2[7:0]	A_1[7:0]	A_0[7:0]
A4	A_7[3:0]A_6[3:0]	A_5[3:0]A_4[3:0]	A_3[3:0]A_2[3:0]	A_1[3:0]A_0[3:0]

The 24-bit RGB888 aligned on 32-bit is supported through the ARGB8888 mode.

Once the 32-bit value is generated, the alpha channel can be modified according to the AM[1:0] field of the DMA2D_FGPFCCR/DMA2D_BGPFCCR registers as shown in *Table 54: Alpha mode configuration*.

The alpha channel can be:

- kept as it is (no modification),
- replaced by the ALPHA[7:0] value of DMA2D_FGPFCCR/DMA2D_BGPFCCR,
- or replaced by the original alpha value multiplied by the ALPHA[7:0] value of DMA2D_FGPFCCR/DMA2D_BGPFCCR divided by 255.

Table 54. Alpha mode configuration

AM[1:0]	Alpha mode
00	No modification
01	Replaced by value in DMA2D_xxPFCCR
10	Replaced by original value multiplied by the value in DMA2D_xxPFCCR / 255
11	Reserved

11.3.5 DMA2D foreground and background CLUT interface

The CLUT interface manages the CLUT memory access and the automatic loading of the CLUT.

Three kinds of accesses are possible:

- CLUT read by the PFC during pixel format conversion operation
- CLUT accessed through the AHB slave port when the CPU is reading or writing data into the CLUT
- CLUT written through the AHB master port when an automatic loading of the CLUT is performed

The CLUT memory loading can be done in two different ways:

- Automatic loading

  The following sequence should be followed to load the CLUT:

  a) Program the CLUT address into the DMA2D_FGCMAR register (foreground CLUT) or DMA2D_BGCMAR register (background CLUT)

  b) Program the CLUT size in the CS[7:0] field of the DMA2D_FGPFCCR register (foreground CLUT) or DMA2D_BGPFCCR register (background CLUT).

  c) Set the START bit of the DMA2D_FGPFCCR register (foreground CLUT) or DMA2D_BGPFCCR register (background CLUT) to start the transfer. During this automatic loading process, the CLUT is not accessible by the CPU. If a conflict occurs, a CLUT access error interrupt is raised assuming CAEIE is set to ‘1’ in DMA2D_CR.

- Manual loading

  The application has to program the CLUT manually through the DMA2D AHB slave port to which the local CLUT memory is mapped.The foreground CLUT is located at address offset 0x0400 and the background CLUT at address offset 0x0800.

The CLUT format can be 24 or 32 bits. It is configured through the CCM bit of the DMA2D_FGPFCCR register (foreground CLUT) or DMA2D_BGPFCCR register (background CLUT) as shown in *Table 55: Supported CLUT color mode*.

Table 55. Supported CLUT color mode

CCM	CLUT color mode
0	32-bit ARGB8888
1	24-bit RGB888

The way the CLUT data are organized in the system memory is specified in *Table 56: CLUT data order in memory*.

Table 56. CLUT data order in memory

CLUT Color Mode	@ + 3	@ + 2	@ + 1	@ + 0
ARGB8888	A_0[7:0]	R_0[7:0]	G_0[7:0]	B_0[7:0]
RGB888	B_1[7:0]	R_0[7:0]	G_0[7:0]	B_0[7:0]
	G_2[7:0]	B_2[7:0]	R_1[7:0]	G_1[7:0]
	R_3[7:0]	G_3[7:0]	B_3[7:0]	R_2[7:0]

11.3.6 DMA2D blender

The DMA2D blender blends the source pixels by pair to compute the resulting pixel.

The blending is performed according to the following equation:

$$\text{with } \alpha_{Mult} = \frac{\alpha_{FG} \cdot \alpha_{BG}}{255}$$

$$\alpha_{OUT} = \alpha_{FG} + \alpha_{BG} - \alpha_{Mult}$$

$$C_{OUT} = \frac{C_{FG}.\alpha_{FG} + C_{BG}.\alpha_{BG} - C_{BG}.\alpha_{Mult}}{\alpha_{OUT}} \quad \text{with C = R or G or B}$$

Division is rounded to the nearest lower integer

No configuration register is required by the blender. The blender usage depends on the DMA2D operating mode defined in MODE[1:0] field of the DMA2D_CR register.

11.3.7 DMA2D output PFC

The output PFC performs the pixel format conversion from 32 bits to the output format defined in the CM[2:0] field of the DMA2D output pixel format converter configuration register (DMA2D_OPFCCR).

The supported output formats are given in *Table 57: Supported color mode in output*

Table 57. Supported color mode in output

CM[2:0]	Color mode
000	ARGB8888
001	RGB888
010	RGB565
011	ARGB1555
100	ARGB4444

11.3.8 DMA2D output FIFO

The output FIFO programs the pixels according to the color format defined in the output PFC.

The destination area is defined through a set of control registers:

- DMA2D output memory address register (DMA2D_OMAR)
- DMA2D output offset register (DMA2D_OOR)
- DMA2D number of lines register (number of lines and pixel per lines) (DMA2D_NLR)

If the DMA2D operates in register-to-memory mode, the configured output rectangle is filled by the color specified in the DMA2D output color register (DMA2D_OCOLR) which contains a fixed 32-bit, 24-bit or 16-bit value. The format is selected by the CM[2:0] field of the DMA2D_OPFCCR register.

The data are stored into the memory in the order defined in *Table 58: Data order in memory*

Table 58. Data order in memory

Color Mode	@ + 3	@ + 2	@ + 1	@ + 0
ARGB8888	A_0[7:0]	R_0[7:0]	G_0[7:0]	B_0[7:0]
RGB888	B_1[7:0]	R_0[7:0]	G_0[7:0]	B_0[7:0]
	G_2[7:0]	B_2[7:0]	R_1[7:0]	G_1[7:0]
	R_3[7:0]	G_3[7:0]	B_3[7:0]	R_2[7:0]
RGB565	R_1[4:0]G_1[5:3]	G_1[2:0]B_1[4:0]	R_0[4:0]G_0[5:3]	G_0[2:0]B_0[4:0]
ARGB1555	A_1[0]R_1[4:0]G_1[4:3]	G_1[2:0]B_1[4:0]	A_0[0]R_0[4:0]G_0[4:3]	G_0[2:0]B_0[4:0]
ARGB4444	A_1[3:0]R_1[3:0]	G_1[3:0]B_1[3:0]	A_0[3:0]R_0[3:0]	G_0[3:0]B_0[3:0]

The RGB888 aligned on 32-bit is supported through the ARGB8888 mode.

11.3.9 DMA2D AHB master port timer

An 8-bit timer is embedded into the AHB master port to provide an optional limitation of the bandwidth on the crossbar.

This timer is clocked by the AHB clock and counts a dead time between two consecutive accesses. This limits the bandwidth usage.

The timer enabling and the dead time value are configured through the AHB master port timer configuration register (DMA2D_AMPTCR).

11.3.10 DMA2D transactions

DMA2D transactions consist of a sequence of a given number of data transfers. The number of data and the width can be programmed by software.

Each DMA2D data transfer is composed of up to 4 steps:

1. Data loading from the memory location pointed by the DMA2D_FGMAR register and pixel format conversion as defined in DMA2D_FGCR.
2. Data loading from a memory location pointed by the DMA2D_BGMAR register and pixel format conversion as defined in DMA2D_BGCR.
3. Blending of all retrieved pixels according to the alpha channels resulting of the PFC operation on alpha values.
4. Pixel format conversion of the resulting pixels according to the DMA2D_OCR register and programming of the data to the memory location addressed through the DMA2D_OMAR register.

11.3.11 DMA2D configuration

Both source and destination data transfers can target peripherals and memories in the whole 4 Gbyte memory area, at addresses ranging between 0x0000 0000 and 0xFFFF FFFF.

The DMA2D can operate in any of the four following modes selected through MODE[1:0] bits of the DMA2D_CR register:

- Register-to-memory
- Memory-to-memory
- Memory-to-memory with PFC
- Memory-to-memory with PFC and blending

Register-to-memory

The register-to-memory mode is used to fill a user defined area with a predefined color.

The color format is set in the DMA2D_OPFCCR.

The DMA2D does not perform any data fetching from any source. It just writes the color defined in the DMA2D_OCOLR register to the area located at the address pointed by the DMA2D_OMAR and defined in the DMA2D_NLR and DMA2D_OOR.

Memory-to-memory

In memory-to-memory mode, the DMA2D does not perform any graphical data transformation. The foreground input FIFO acts as a buffer and the data are transferred from the source memory location defined in DMA2D_FGMAR to the destination memory location pointed by DMA2D_OMAR.

The color mode programmed in the CM[3:0] bits of the DMA2D_FGPFCCR register defines the number of bits per pixel for both input and output.

The size of the area to be transferred is defined by the DMA2D_NLR and DMA2D_FGOR registers for the source, and by DMA2D_NLR and DMA2D_OOR registers for the destination.

Memory-to-memory with PFC

In this mode, the DMA2D performs a pixel format conversion of the source data and stores them in the destination memory location.

The size of the areas to be transferred are defined by the DMA2D_NLR and DMA2D_FGOR registers for the source, and by DMA2D_NLR and DMA2D_OOR registers for the destination.

Data are fetched from the location defined in the DMA2D_FGMAR register and processed by the foreground PFC. The original pixel format is configured through the DMA2D_FGPFCCR register.

If the original pixel format is direct color mode, then the color channels are all expanded to 8 bits.

If the pixel format is indirect color mode, the associated CLUT has to be loaded into the CLUT memory.

The CLUT loading can be done automatically by following the sequence below:

1. Set the CLUT address into the DMA2D_FGCMAR.
2. Set the CLUT size in the CS[7:0] bits of the DMA2D_FGPFCCR register.
3. Set the CLUT format (24 or 32 bits) in the CCM bit of the DMA2D_FGPFCCR register.
4. Start the CLUT loading by setting the START bit of the DMA2D_FGPFCCR register.

Once the CLUT loading is complete, the CTCIF flag of the DMA2D_IFR register is raised, and an interrupt is generated if the CTCIE bit is set in DMA2D_CR. The automatic CLUT loading process can not work in parallel with classical DMA2D transfers.

The CLUT can also be filled by the CPU or by any other master through the APB port. The access to the CLUT is not possible when a DMA2D transfer is ongoing and uses the CLUT (indirect color format).

In parallel to the color conversion process, the alpha value can be added or changed depending on the value programmed in the DMA2D_FGPFCCR register. If the original image does not have an alpha channel, a default alpha value of 0xFF is automatically added to obtain a fully opaque pixel. The alpha value can be modified according to the AM[1:0] bits of the DMA2D_FGPFCCR register:

- It can be unchanged.
- It can be replaced by the value defined in the ALPHA[7:0] value of the DMA2D_FGPFCCR register.
- It can be replaced by the original value multiplied by the ALPHA[7:0] value of the DMA2D_FGPFCCR register divided by 255.

The resulting 32-bit data are encoded by the OUT PFC into the format specified by the CM[2:0] field of the DMA2D_OPFCCR register. The output pixel format cannot be the indirect mode since no CLUT generation process is supported.

The processed data are written into the destination memory location pointed by DMA2D_OMAR.

Memory-to-memory with PFC and blending

In this mode, 2 sources are fetched in the foreground FIFO and background FIFO from the memory locations defined by DMA2D_FGMAR and DMA2D_BGMAR.

The two pixel format converters have to be configured as described in the memory-to-memory mode. Their configurations can be different as each pixel format converter are independent and have their own CLUT memory.

Once each pixel has been converted into 32 bits by their respective PFCs, they are blended according to the equation below:

$$\text{with } \alpha_{Mult} = \frac{\alpha_{FG} \cdot \alpha_{BG}}{255}$$

$$\alpha_{OUT} = \alpha_{FG} + \alpha_{BG} - \alpha_{Mult}$$

$$C_{OUT} = \frac{C_{FG}.\alpha_{FG} + C_{BG}.\alpha_{BG} - C_{BG}.\alpha_{Mult}}{\alpha_{OUT}} \quad \text{with C = R or G or B}$$

Division are rounded to the nearest lower integer

The resulting 32-bit pixel value is encoded by the output PFC according to the specified output format, and the data are written into the destination memory location pointed by DMA2D_OMAR.

Configuration error detection

The DMA2D checks that the configuration is correct before any transfer. The configuration error interrupt flag is set by hardware when a wrong configuration is detected when a new transfer/automatic loading starts. An interrupt is then generated if the CEIE bit of the DMA2D_CR is set.

The wrong configurations that can be detected are listed below:

- Foreground CLUT automatic loading: MA bits of DMA2D_FGCMAR not aligned with CCM of DMA2D_FGPFCCR.
- Background CLUT automatic loading: MA of DMA2D_BGCMAR not aligned with CCM of DMA2D_BGPFCCR
- Memory transfer (except in register-to-memory mode): MA of DMA2D_FGMAR not aligned with CM of DMA2D_FGPFCCR
- Memory transfer (except in register-to-memory mode): CM in DMA2D_FGPFCCR are invalid
- Memory transfer (except in register-to-memory mode): PL bits of DMA2D_NLR odd while CM of DMA2D_FGPFCCR is A4 or L4
- Memory transfer (except in register-to-memory mode): LO bits in DMA2D_FGOR odd while CM of DMA2D_FGPFCCR is A4 or L4
- Memory transfer (only in blending mode): MA bits in DMA2D_BGMAR are not aligned with the CM of DMA2D_BGPFCCR
- Memory transfer: CM of DMA2D_BGPFCCR invalid (only in blending mode)
- Memory transfer (only in blending mode): PL bits of DMA2D_NLR odd while CM of DMA2D_BGPFCCR is A4 or L4
- Memory transfer (only in blending mode): LO bits of DMA2D_BGOR odd while CM of DMA2D_BGPFCCR is A4 or L4
- Memory transfer (except in memory to memory mode): MA bits in DMA2D_OMAR are not aligned with CM bits in DMA2D_OPFCCR.
- Memory transfer (except in memory to memory mode): CM bits in DMA2D_OPFCCR invalid
- Memory transfer: NL bits in DMA2D_NLR = 0
- Memory transfer: PL bits in DMA2D_NLR = 0

11.3.12 DMA2D transfer control (start, suspend, abort and completion)

Once the DMA2D is configured, the transfer can be launched by setting the START bit of the DMA2D_CR register. Once the transfer is completed, the START bit is automatically reset and the TCIF flag of the DMA2D_ISR register is raised. An interrupt can be generated if the TCIE bit of the DMA2D_CR is set.

The user application can suspend the DMA2D at any time by setting the SUSP bit of the DMA2D_CR register. The transaction can then be aborted by setting the ABORT bit of the DMA2D_CR register or can be restarted by resetting the SUSP bit of the DMA2D_CR register.

The user application can abort at any time an ongoing transaction by setting the ABORT bit of the DMA2D_CR register. In this case, the TCIF flag is not raised.

Automatic CLUT transfers can also be aborted or suspended by using the ABORT or the SUSP bit of the DMA2D_CR register.

11.3.13 Watermark

A watermark can be programmed to generate an interrupt when the last pixel of a given line has been written to the destination memory area.

The line number is defined in the LW[15:0] field of the DMA2D_LWR register.

When the last pixel of this line has been transferred, the TWIF flag of the DMA2D_ISR register is raised and an interrupt is generated if the TWIE bit of the DMA2D_CR is set.

11.3.14 Error management

Two kind of errors can be triggered:

- AHB master port errors signalled by the TEIF flag of the DMA2D_ISR register.
- Conflicts caused by CLUT access (CPU trying to access the CLUT while a CLUT loading or a DMA2D transfer is ongoing) signalled by the CAEIF flag of the DMA2D_ISR register.

Both flags are associated to their own interrupt enable flag in the DMA2D_CR register to generate an interrupt if need be (TEIE and CAEIE).

11.3.15 AHB dead time

To limit the AHB bandwidth usage, a dead time between two consecutive AHB accesses can be programmed.

This feature can be enabled by setting the EN bit in the DMA2D_AMTCR register.

The dead time value is stored in the DT[7:0] field of the DMA2D_AMTCR register. This value represents the guaranteed minimum number of cycles between two consecutive transactions on the AHB bus.

The update of the dead time value while the DMA2D is running will be taken into account for the next AHB transfer.

11.4 DMA2D interrupts

An interrupt can be generated on the following events:

- Configuration error
- CLUT transfer complete
- CLUT access error
- Transfer watermark reached
- Transfer complete
- Transfer error

Separate interrupt enable bits are available for flexibility.

Table 59. DMA2D interrupt requests

Interrupt event	Event flag	Enable control bit
Configuration error	CEIF	CEIE
CLUT transfer complete	CTCIF	CTCIE

Table 59. DMA2D interrupt requests (continued)

Interrupt event	Event flag	Enable control bit
CLUT access error	CAEIF	CAEIE
Transfer watermark	TWF	TWIE
Transfer complete	TCIF	TCIE
Transfer error	TEIF	TEIE

11.5 DMA2D registers

11.5.1 DMA2D control register (DMA2D_CR)

Address offset: 0x0000

Reset value: 0x0000 0000

31	30	29	28	27	26	25	24	23	22	21	20	19	18	17	16
Reserved														MODE	

15	14	13	12	11	10	9	8	7	6	5	4	3	2	1	0
Reserved		CEIE	CTCIE	CAEIE	TWIE	TCIE	TEIE	Reserved					ABORT	SUSP	START
		rw	rw	rw	rw	rw	rw						rs	rw	rs

Bits 31:18 Reserved, must be kept at reset value

Bits 17:16 **MODE**: DMA2D mode

This bit is set and cleared by software. It cannot be modified while a transfer is ongoing.

00: Memory-to-memory (FG fetch only)

01: Memory-to-memory with PFC (FG fetch only with FG PFC active)

10: Memory-to-memory with blending (FG and BG fetch with PFC and blending)

11: Register-to-memory (no FG nor BG, only output stage active)

Bits 15:14 Reserved, must be kept at reset value

Bit 13 **CEIE**: Configuration Error Interrupt Enable

This bit is set and cleared by software.

0: CE interrupt disable

1: CE interrupt enable

Bit 12 **CTCIE**: CLUT transfer complete interrupt enable

This bit is set and cleared by software.

0: CTC interrupt disable

1: CTC interrupt enable

Bit 11 **CAEIE**: CLUT access error interrupt enable

This bit is set and cleared by software.

0: CAE interrupt disable

1: CAE interrupt enable

Bit 10 **TWIE**: Transfer watermark interrupt enable
This bit is set and cleared by software.
0: TW interrupt disable
1: TW interrupt enable

Bit 9 **TCIE**: Transfer complete interrupt enable
This bit is set and cleared by software.
0: TC interrupt disable
1: TC interrupt enable

Bit 8 **TEIE**: Transfer error interrupt enable
This bit is set and cleared by software.
0: TE interrupt disable
1: TE interrupt enable

Bits 7:3 Reserved, must be kept at reset value

Bit 2 **ABORT**: Abort
This bit can be used to abort the current transfer. This bit is set by software and is automatically reset by hardware when the START bit is reset.
0: No transfer abort requested
1: Transfer abort requested

Bit 1 **SUSP**: Suspend
This bit can be used to suspend the current transfer. This bit is set and reset by software. It is automatically reset by hardware when the START bit is reset.
0: Transfer not suspended
1: Transfer suspended

Bit 0 **START**: Start
This bit can be used to launch the DMA2D according to the parameters loaded in the various configuration registers. This bit is automatically reset by the following events:
- At the end of the transfer
- When the data transfer is aborted by the user application by setting the ABORT bit in DMA2D_CR
- When a data transfer error occurs
- When the data transfer has not started due to a configuration error or another transfer operation already ongoing (automatic CLUT loading).

11.5.2 DMA2D Interrupt Status Register (DMA2D_ISR)

Address offset: 0x0004

Reset value: 0x0000 0000

31	30	29	28	27	26	25	24	23	22	21	20	19	18	17	16
Reserved															

15	14	13	12	11	10	9	8	7	6	5	4	3	2	1	0
Reserved										CEIF	CTCIF	CAEIF	TWIF	TCIF	TEIF
										r	r	r	r	r	r

Bits 31:6 Reserved, must be kept at reset value

Bit 5 **CEIF**: Configuration error interrupt flag

This bit is set when the START bit of DMA2D_CR, DMA2DFGPFCCR or DMA2D_BGPFCCR is set and a wrong configuration has been programmed.

Bit 4 **CTCIF**: CLUT transfer complete interrupt flag

This bit is set when the CLUT copy from a system memory area to the internal DMA2D memory is complete.

Bit 3 **CAEIF**: CLUT access error interrupt flag

This bit is set when the CPU accesses the CLUT while the CLUT is being automatically copied from a system memory to the internal DMA2D.

Bit 2 **TWIF**: Transfer watermark interrupt flag

This bit is set when the last pixel of the watermarked line has been transferred.

Bit 1 **TCIF**: Transfer complete interrupt flag

This bit is set when a DMA2D transfer operation is complete (data transfer only).

Bit 0 **TEIF**: Transfer error interrupt flag

This bit is set when an error occurs during a DMA transfer (data transfer or automatic CLUT loading).

11.5.3 DMA2D interrupt flag clear register (DMA2D_IFCR)

Address offset: 0x0008

Reset value: 0x0000 0000

31	30	29	28	27	26	25	24	23	22	21	20	19	18	17	16
Reserved															

15	14	13	12	11	10	9	8	7	6	5	4	3	2	1	0
Reserved										CCEIF	CCTCIF	CAECIF	CTWIF	CTCIF	CTEIF
										rc_w1	rc_w1	rc_w1	rc_w1	rc_w1	rc_w1

Bits 31:6 Reserved, must be kept at reset value

Bit 5 **CCEIF**: Clear configuration error interrupt flag
Programming this bit to 1 clears the CEIF flag in the DMA2D_ISR register

Bit 4 **CCTCIF**: Clear CLUT transfer complete interrupt flag
Programming this bit to 1 clears the CTCIF flag in the DMA2D_ISR register

Bit 3 **CAECIF**: Clear CLUT access error interrupt flag
Programming this bit to 1 clears the CAEIF flag in the DMA2D_ISR register

Bit 2 **CTWIF**: Clear transfer watermark interrupt flag
Programming this bit to 1 clears the TWIF flag in the DMA2D_ISR register

Bit 1 **CTCIF**: Clear transfer complete interrupt flag
Programming this bit to 1 clears the TCIF flag in the DMA2D_ISR register

Bit 0 **CTEIF**: Clear Transfer error interrupt flag
Programming this bit to 1 clears the TEIF flag in the DMA2D_ISR register

11.5.4 DMA2D foreground memory address register (DMA2D_FGMAR)

Address offset: 0x000C

Reset value: 0x0000 0000

31	30	29	28	27	26	25	24	23	22	21	20	19	18	17	16
MA[31:16]															
rw	rw	rw	rw	rw	rw	rw	rw	rw	rw	rw	rw	rw	rw	rw	rw
15	14	13	12	11	10	9	8	7	6	5	4	3	2	1	0
MA[15:0]															
rw	rw	rw	rw	rw	rw	rw	rw	rw	rw	rw	rw	rw	rw	rw	rw

Bits 31:0 **MA[31: 0]**: Memory address

Address of the data used for the foreground image. This register can only be written when data transfers are disabled. Once the data transfer has started, this register is read-only.

The address alignment must match the image format selected e.g. a 32-bit per pixel format must be 32-bit aligned, a 16-bit per pixel format must be 16-bit aligned and a 4-bit per pixel format must be 8-bit aligned.

11.5.5 DMA2D foreground offset register (DMA2D_FGOR)

Address offset: 0x0010

Reset value: 0x0000 0000

31	30	29	28	27	26	25	24	23	22	21	20	19	18	17	16
Reserved															
15	14	13	12	11	10	9	8	7	6	5	4	3	2	1	0
Reserved		LO[13:0]													
		rw	rw	rw	rw	rw	rw	rw	rw	rw	rw	rw	rw	rw	rw

Bits 31:14 Reserved, must be kept at reset value

Bits 13:0 **LO[13: 0]**: Line offset

Line offset used for the foreground expressed in pixel. This value is used to generate the address. It is added at the end of each line to determine the starting address of the next line.

These bits can only be written when data transfers are disabled. Once a data transfer has started, they become read-only.

If the image format is 4-bit per pixel, the line offset must be even.

11.5.6 DMA2D background memory address register (DMA2D_BGMAR)

Address offset: 0x0014

Reset value: 0x0000 0000

31	30	29	28	27	26	25	24	23	22	21	20	19	18	17	16
MA[31:16]															
rw	rw	rw	rw	rw	rw	rw	rw	rw	rw	rw	rw	rw	rw	rw	rw
15	14	13	12	11	10	9	8	7	6	5	4	3	2	1	0
MA[15:0]															
rw	rw	rw	rw	rw	rw	rw	rw	rw	rw	rw	rw	rw	rw	rw	rw

Bits 31: 0 **MA[31: 0]**: Memory address

Address of the data used for the background image. This register can only be written when data transfers are disabled. Once a data transfer has started, this register is read-only.

The address alignment must match the image format selected e.g. a 32-bit per pixel format must be 32-bit aligned, a 16-bit per pixel format must be 16-bit aligned and a 4-bit per pixel format must be 8-bit aligned.

11.5.7 DMA2D background offset register (DMA2D_BGOR)

Address offset: 0x0018

Reset value: 0x0000 0000

31	30	29	28	27	26	25	24	23	22	21	20	19	18	17	16
Reserved															
15	14	13	12	11	10	9	8	7	6	5	4	3	2	1	0
Reserved		LO[13:0]													
		rw	rw	rw	rw	rw	rw	rw	rw	rw	rw	rw	rw	rw	rw

Bits 31:14 Reserved, must be kept at reset value

Bits 13:0 **LO[13: 0]**: Line offset

Line offset used for the background image (expressed in pixel). This value is used for the address generation. It is added at the end of each line to determine the starting address of the next line.

These bits can only be written when data transfers are disabled. Once data transfer has started, they become read-only.

If the image format is 4-bit per pixel, the line offset must be even.

11.5.8 DMA2D foreground PFC control register (DMA2D_FGPFCCR)

Address offset: 0x001C

Reset value: 0x0000 0000

31	30	29	28	27	26	25	24	23	22	21	20	19	18	17	16
ALPHA[7:0]								Reserved						AM[1:0]	
rw	rw	rw	rw	rw	rw	rw	rw							rw	rw

15	14	13	12	11	10	9	8	7	6	5	4	3	2	1	0
CS[7:0]								Reserved		START	CCM	CM[3:0]			
rw	rw	rw	rw	rw	rw	rw	rw			rs	rw	rw	rw	rw	rw

Bits 31:24 **ALPHA[7: 0]**: Alpha value

These bits define a fixed alpha channel value which can replace the original alpha value or be multiplied by the original alpha value according to the alpha mode selected through the AM[1:0] bits.

These bits can only be written when data transfers are disabled. Once a transfer has started, they become read-only.

Bits 23:18 Reserved, must be kept at reset value

Bits 17:16 **AM[1: 0]**: Alpha mode

These bits select the alpha channel value to be used for the foreground image. They can only be written data the transfer are disabled. Once the transfer has started, they become read-only.

00: No modification of the foreground image alpha channel value

01: Replace original foreground image alpha channel value by ALPHA[7: 0]

10: Replace original foreground image alpha channel value by ALPHA[7:0] multiplied with original alpha channel value

other configurations are meaningless

Bits 15:8 **CS[7: 0]**: CLUT size

These bits define the size of the CLUT used for the foreground image. Once the CLUT transfer has started, this field is read-only.

The number of CLUT entries is equal to CS[7:0] + 1.

Bits 7:6 Reserved, must be kept at reset value

Bit 5 **START**: Start

This bit can be set to start the automatic loading of the CLUT. It is automatically reset:

- at the end of the transfer
- when the transfer is aborted by the user application by setting the ABORT bit in DMA2D_CR
- when a transfer error occurs
- when the transfer has not started due to a configuration error or another transfer operation already ongoing (data transfer or automatic background CLUT transfer).

Bit 4 **CCM**: CLUT color mode

This bit defines the color format of the CLUT. It can only be written when the transfer is disabled. Once the CLUT transfer has started, this bit is read-only.

0: ARGB8888

1: RGB888

others: meaningless

Bits 3:0 **CM[3: 0]**: Color mode

These bits defines the color format of the foreground image. They can only be written when data transfers are disabled. Once the transfer has started, they are read-only.

0000: ARGB8888

0001: RGB888

0010: RGB565

0011: ARGB1555

0100: ARGB4444

0101: L8

0110: AL44

0111: AL88

1000: L4

1001: A8

1010: A4

others: meaningless

11.5.9 DMA2D foreground color register (DMA2D_FGCOLR)

Address offset: 0x0020

Reset value: 0x0000 0000

31	30	29	28	27	26	25	24	23	22	21	20	19	18	17	16
Reserved								RED[7:0]							
								rw	rw	rw	rw	rw	rw	rw	rw
15	14	13	12	11	10	9	8	7	6	5	4	3	2	1	0
GREEN[7:0]								BLUE[7:0]							
rw	rw	rw	rw	rw	rw	rw	rw	rw	rw	rw	rw	rw	rw	rw	rw

Bits 31:24 Reserved, must be kept at reset value

Bits 23:16 **RED[7: 0]**: Red Value

These bits defines the red value for the A4 or A8 mode of the foreground image. They can only be written when data transfers are disabled. Once the transfer has started, they are read-only.

Bits 15:8 **GREEN[7: 0]**: Green Value

These bits defines the green value for the A4 or A8 mode of the foreground image. They can only be written when data transfers are disabled. Once the transfer has started, They are read-only.

Bits 7:0 **BLUE[7: 0]**: Blue Value

These bits defines the blue value for the A4 or A8 mode of the foreground image. They can only be written when data transfers are disabled. Once the transfer has started, They are read-only.

11.5.10 DMA2D background PFC control register (DMA2D_BGPFCCR)

Address offset: 0x0024

Reset value: 0x0000 0000

31	30	29	28	27	26	25	24	23	22	21	20	19	18	17	16
ALPHA[7:0]								Reserved						AM[1:0]	
rw	rw	rw	rw	rw	rw	rw	rw							rw	rw

15	14	13	12	11	10	9	8	7	6	5	4	3	2	1	0
CS[7:0]								Reserved		START	CCM	CM[3:0]			
rw	rw	rw	rw	rw	rw	rw	rw			rs	rw	rw	rw	rw	rw

Bits 31:24 **ALPHA[7: 0]**: Alpha value

These bits define a fixed alpha channel value which can replace the original alpha value or be multiplied with the original alpha value according to the alpha mode selected with bits AM[1: 0]. These bits can only be written when data transfers are disabled. Once the transfer has started, they are read-only.

Bits 23:18 Reserved, must be kept at reset value

Bits 17:16 **AM[1: 0]**: Alpha mode

These bits define which alpha channel value to be used for the background image. These bits can only be written when data transfers are disabled. Once the transfer has started, they are read-only.

00: No modification of the foreground image alpha channel value

01: Replace original background image alpha channel value by ALPHA[7: 0]

10: Replace original background image alpha channel value by ALPHA[7:0] multiplied with original alpha channel value

others: meaningless

Bits 15:8 **CS[7: 0]**: CLUT size

These bits define the size of the CLUT used for the BG. Once the CLUT transfer has started, this field is read-only.

The number of CLUT entries is equal to CS[7:0] + 1.

Bits 7:6 Reserved, must be kept at reset value

Bit 5 **START**: Start

This bit is set to start the automatic loading of the CLUT. This bit is automatically reset:

- at the end of the transfer
- when the transfer is aborted by the user application by setting the ABORT bit in the DMA2D_CR
- when a transfer error occurs
- when the transfer has not started due to a configuration error or another transfer operation already on going (data transfer or automatic foreground CLUT transfer).

Bit 4 **CCM**: CLUT Color mode

These bits define the color format of the CLUT. This register can only be written when the transfer is disabled. Once the CLUT transfer has started, this bit is read-only.

0: ARGB8888

1: RGB888

others: meaningless

Bits 3:0 **CM[3: 0]**: Color mode

These bits define the color format of the foreground image. These bits can only be written when data transfers are disabled. Once the transfer has started, they are read-only.

0000: ARGB8888

0001: RGB888

0010: RGB565

0011: ARGB1555

0100: ARGB4444

0101: L8

0110: AL44

0111: AL88

1000: L4

1001: A8

1010: A4

others: meaningless

11.5.11 DMA2D background color register (DMA2D_BGCOLR)

Address offset: 0x0028

Reset value: 0x0000 0000

31	30	29	28	27	26	25	24	23	22	21	20	19	18	17	16
Reserved								RED[7:0]							
								rw	rw	rw	rw	rw	rw	rw	rw
15	14	13	12	11	10	9	8	7	6	5	4	3	2	1	0
GREEN[7:0]								BLUE[7:0]							
rw	rw	rw	rw	rw	rw	rw	rw	rw	rw	rw	rw	rw	rw	rw	rw

Bits 31:24 Reserved, must be kept at reset value

Bits 23:16 **RED[7: 0]**: Red Value

These bits define the red value for the A4 or A8 mode of the background. These bits can only be written when data transfers are disabled. Once the transfer has started, they are read-only.

Bits 15:8 **GREEN[7: 0]**: Green Value

These bits define the green value for the A4 or A8 mode of the background. These bits can only be written when data transfers are disabled. Once the transfer has started, they are read-only.

Bits 7:0 **BLUE[7: 0]**: Blue Value

These bits define the blue value for the A4 or A8 mode of the background. These bits can only be written when data transfers are disabled. Once the transfer has started, they are read-only.

11.5.12 DMA2D foreground CLUT memory address register (DMA2D_FGCMAR)

Address offset: 0x002C

Reset value: 0x0000 0000

31	30	29	28	27	26	25	24	23	22	21	20	19	18	17	16
MA[31:16]															
rw	rw	rw	rw	rw	rw	rw	rw	rw	rw	rw	rw	rw	rw	rw	rw
15	14	13	12	11	10	9	8	7	6	5	4	3	2	1	0
MA[15:0]															
rw	rw	rw	rw	rw	rw	rw	rw	rw	rw	rw	rw	rw	rw	rw	rw

Bits 31: 0 **MA[31: 0]**: Memory Address

Address of the data used for the CLUT address dedicated to the foreground image. This register can only be written when no transfer is ongoing. Once the CLUT transfer has started, this register is read-only.

If the foreground CLUT format is 32-bit, the address must be 32-bit aligned.

11.5.13 DMA2D background CLUT memory address register (DMA2D_BGCMAR)

Address offset: 0x0030

Reset value: 0x0000 0000

31	30	29	28	27	26	25	24	23	22	21	20	19	18	17	16
MA[31:16]															
rw	rw	rw	rw	rw	rw	rw	rw	rw	rw	rw	rw	rw	rw	rw	rw
15	14	13	12	11	10	9	8	7	6	5	4	3	2	1	0
MA[15:0]															
rw	rw	rw	rw	rw	rw	rw	rw	rw	rw	rw	rw	rw	rw	rw	rw

Bits 31: 0 **MA[31: 0]**: Memory address

Address of the data used for the CLUT address dedicated to the background image. This register can only be written when no transfer is on going. Once the CLUT transfer has started, this register is read-only.

If the background CLUT format is 32-bit, the address must be 32-bit aligned.

11.5.14 DMA2D output PFC control register (DMA2D_OPFCCR)

Address offset: 0x0034

Reset value: 0x0000 0000

31	30	29	28	27	26	25	24	23	22	21	20	19	18	17	16
Reserved															
15	14	13	12	11	10	9	8	7	6	5	4	3	2	1	0
Reserved													CM[2:0]		
													rw	rw	rw

Bits 31: 3 Reserved, must be kept at reset value

Bits 2: 0 **CM[2: 0]**: Color mode

These bits define the color format of the output image. These bits can only be written when data transfers are disabled. Once the transfer has started, they are read-only.

000: ARGB8888
001: RGB888
010: RGB565
011: ARGB1555
100: ARGB4444
others: meaningless

11.5.15 DMA2D output color register (DMA2D_OCOLR)

Address offset: 0x0038

Reset value: 0x0000 0000

31	30	29	28	27	26	25	24	23	22	21	20	19	18	17	16
ALPHA[7:0]								RED[7:0]							
rw	rw	rw	rw	rw	rw	rw	rw	rw	rw	rw	rw	rw	rw	rw	rw
15	14	13	12	11	10	9	8	7	6	5	4	3	2	1	0
GREEN[7:0]								BLUE[7:0]							
RED[4:0]					GREEN[5:0]						BLUE[4:0]				
A	RED[4:0]					GREEN[4:0]					BLUE[4:0]				
ALPHA[3:0]				RED[3:0]				GREEN[3:0]				BLUE[3:0]			
rw	rw	rw	rw	rw	rw	rw	rw	rw	rw	rw	rw	rw	rw	rw	rw

Bits 31:24 **ALPHA[7: 0]**: Alpha Channel Value

These bits define the alpha channel of the output color. These bits can only be written when data transfers are disabled. Once the transfer has started, they are read-only.

Bits 23:16 **RED[7: 0]**: Red Value

These bits define the red value of the output image. These bits can only be written when data transfers are disabled. Once the transfer has started, they are read-only.

Bits 15:8 **GREEN[7: 0]**: Green Value

These bits define the green value of the output image. These bits can only be written when data transfers are disabled. Once the transfer has started, they are read-only.

Bits 7:0 **BLUE[7: 0]**: Blue Value

These bits define the blue value of the output image. These bits can only be written when data transfers are disabled. Once the transfer has started, they are read-only.

11.5.16 DMA2D output memory address register (DMA2D_OMAR)

Address offset: 0x003C

Reset value: 0x0000 0000

31	30	29	28	27	26	25	24	23	22	21	20	19	18	17	16
MA[31:16]															
rw	rw	rw	rw	rw	rw	rw	rw	rw	rw	rw	rw	rw	rw	rw	rw
15	14	13	12	11	10	9	8	7	6	5	4	3	2	1	0
MA[15:0]															
rw	rw	rw	rw	rw	rw	rw	rw	rw	rw	rw	rw	rw	rw	rw	rw

Bits 31: 0 **MA[31: 0]**: Memory Address

Address of the data used for the output FIFO. These bits can only be written when data transfers are disabled. Once the transfer has started, they are read-only.

The address alignment must match the image format selected e.g. a 32-bit per pixel format must be 32-bit aligned and a 16-bit per pixel format must be 16-bit aligned.

11.5.17 DMA2D output offset register (DMA2D_OOR)

Address offset: 0x0040

Reset value: 0x0000 0000

31	30	29	28	27	26	25	24	23	22	21	20	19	18	17	16
Reserved															

15	14	13	12	11	10	9	8	7	6	5	4	3	2	1	0
Reserved		LO[13:0]													
		rw	rw	rw	rw	rw	rw	rw	rw	rw	rw	rw	rw	rw	rw

Bits 31:14 Reserved, must be kept at reset value

Bits 13:0 **LO[13: 0]**: Line Offset

Line offset used for the output (expressed in pixels). This value is used for the address generation. It is added at the end of each line to determine the starting address of the next line. These bits can only be written when data transfers are disabled. Once the transfer has started, they are read-only.

11.5.18 DMA2D number of line register (DMA2D_NLR)

Address offset: 0x0044

Reset value: 0x0000 0000

31	30	29	28	27	26	25	24	23	22	21	20	19	18	17	16
Reserved		PL[13:0]													
		rw	rw	rw	rw	rw	rw	rw	rw	rw	rw	rw	rw	rw	rw

15	14	13	12	11	10	9	8	7	6	5	4	3	2	1	0
NL[15:0]															
rw	rw	rw	rw	rw	rw	rw	rw	rw	rw	rw	rw	rw	rw	rw	rw

Bits 31:30 Reserved, must be kept at reset value

Bits 29:16 **PL[13: 0]**: Pixel per lines

Number of pixels per lines of the area to be transferred. These bits can only be written when data transfers are disabled. Once the transfer has started, they are read-only.
If any of the input image format is 4-bit per pixel, pixel per lines must be even.

Bits 15:0 **NL[15: 0]**: Number of lines

Number of lines of the area to be transferred. These bits can only be written when data transfers are disabled. Once the transfer has started, they are read-only.

11.5.19 DMA2D line watermark register (DMA2D_LWR)

Address offset: 0x0048

Reset value: 0x0000 0000

31	30	29	28	27	26	25	24	23	22	21	20	19	18	17	16
Reserved															
15	14	13	12	11	10	9	8	7	6	5	4	3	2	1	0
LW[15:0]															
rw	rw	rw	rw	rw	rw	rw	rw	rw	rw	rw	rw	rw	rw	rw	rw

Bits 31:16 Reserved, must be kept at reset value

Bits 15:0 **LW[15:0]**: Line watermark

These bits allow to configure the line watermark for interrupt generation.

An interrupt is raised when the last pixel of the watermarked line has been transferred. These bits can only be written when data transfers are disabled. Once the transfer has started, they are read-only.

11.5.20 DMA2D AHB master timer configuration register (DMA2D_AMTCR)

Address offset: 0x004C

Reset value: 0x0000 0000

31	30	29	28	27	26	25	24	23	22	21	20	19	18	17	16
Reserved															
15	14	13	12	11	10	9	8	7	6	5	4	3	2	1	0
DT[7:0]								Reserved							EN
rw	rw	rw	rw	rw	rw	rw	rw								rw

Bits 31:16 Reserved

Bits 15:8 **DT[7: 0]**: Dead Time

Dead time value in the AHB clock cycle inserted between two consecutive accesses on the AHB master port. These bits represent the minimum guaranteed number of cycles between two consecutive AHB accesses.

Bits 7:1 Reserved

Bit 0 **EN**: Enable

Enables the dead time functionality.

11.5.21 DMA2D register map

The following table summarizes the DMA2D registers. Refer to *Section 2.3: Memory map* for the DMA2D register base address.

Table 60. DMA2D register map and reset values

Offset	Register	31	30	29	28	27	26	25	24	23	22	21	20	19	18	17	16	15	14	13	12	11	10	9	8	7	6	5	4	3	2	1	0
0x0000	DMA2D_CR	Reserved														MODE[1:0]		Reserved			CEIE	CTCIE	CAEIE	TWIE	TCIE	TEIE	Reserved				ABORT	SUSP	START
	Reset value															0	0				0	0	0	0	0	0					0	0	0
0x0004	DMA2D_ISR	Reserved																										CEIF	CTCIF	CAEIF	TWIF	TCIF	TEIF
	Reset value																											0	0	0	0	0	0
0x0008	DMA2D_IFCR	Reserved																										CCEIF	CCTCIF	CAECIF	CTWIF	CTCIF	CTEIF
	Reset value																											0	0	0	0	0	0
0x000C	DMA2D_FGMAR	MA[31:0]																															
	Reset value	0	0	0	0	0	0	0	0	0	0	0	0	0	0	0	0	0	0	0	0	0	0	0	0	0	0	0	0	0	0	0	0
0x0010	DMA2D_FGOR	Reserved																		LO[13:0]													
	Reset value																			0	0	0	0	0	0	0	0	0	0	0	0	0	0
0x0014	DMA2D_BGMAR	MA[31:0]																															
	Reset value	0	0	0	0	0	0	0	0	0	0	0	0	0	0	0	0	0	0	0	0	0	0	0	0	0	0	0	0	0	0	0	0
0x0018	DMA2D_BGOR	Reserved																		LO[13:0]													
	Reset value																			0	0	0	0	0	0	0	0	0	0	0	0	0	0
0x001C	DMA2D_FGPFCCR	ALPHA[7:0]								Reserved						AM[1:0]		CS[7:0]								Res		START	CCM	CM[3:0]			
	Reset value	0	0	0	0	0	0	0	0							0	0	0	0	0	0	0	0	0	0			0	0	0	0	0	0
0x0020	DMA2D_FGCOLR	APLHA[7:0]								RED[7:0]								GREEN[7:0]								BLUE[7:0]							
	Reset value	0	0	0	0	0	0	0	0	0	0	0	0	0	0	0	0	0	0	0	0	0	0	0	0	0	0	0	0	0	0	0	0
0x0024	DMA2D_BGPFCCR	ALPHA[7:0]								Reserved						AM[1:0]		CS[7:0]								Res		START	CCM	CM[3:0]			
	Reset value	0	0	0	0	0	0	0	0							0	0	0	0	0	0	0	0	0	0			0	0	0	0	0	0
0x0028	DMA2D_BGCOLR	APLHA[7:0]								RED[7:0]								GREEN[7:0]								BLUE[7:0]							
	Reset value	0	0	0	0	0	0	0	0	0	0	0	0	0	0	0	0	0	0	0	0	0	0	0	0	0	0	0	0	0	0	0	0
0x002C	DMA2D_FGCMAR	MA[31:0]																															
	Reset value	0	0	0	0	0	0	0	0	0	0	0	0	0	0	0	0	0	0	0	0	0	0	0	0	0	0	0	0	0	0	0	0
0x0030	DMA2D_BGCMAR	MA[31:0]																															
	Reset value	0	0	0	0	0	0	0	0	0	0	0	0	0	0	0	0	0	0	0	0	0	0	0	0	0	0	0	0	0	0	0	0
0x0034	DMA2D_OPFCCR	Reserved																													CM[2:0]		
	Reset value																														0	0	0
0x0038	DMA2D_OCOLR	APLHA[7:0]								RED[7:0]								GREEN[7:0]								BLUE[7:0]							
		Reserved																RED[4:0]					GREEN[6:0]							BLUE[4:0]		
		Reserved																A	RED[4:0]					GREEN[4:0]						BLUE[4:0]		
		Reserved																ALPHA[3:0]					RED[3:0]			GREEN[3:0]				BLUE[3:0]		
	Reset value	0	0	0	0	0	0	0	0	0	0	0	0	0	0	0	0	0	0	0	0	0	0	0	0	0	0	0	0	0	0	0	0
0x003C	DMA2D_OMAR	MA[31:0]																															
	Reset value	0	0	0	0	0	0	0	0	0	0	0	0	0	0	0	0	0	0	0	0	0	0	0	0	0	0	0	0	0	0	0	0

Table 60. DMA2D register map and reset values (continued)

Offset	Register	31	30	29	28	27	26	25	24	23	22	21	20	19	18	17	16	15	14	13	12	11	10	9	8	7	6	5	4	3	2	1	0
0x0040	DMA2D_OOR	Reserved																		LO[13:0]													
	Reset value																			0	0	0	0	0	0	0	0	0	0	0	0	0	0
0x0044	DMA2D_NLR	Res		PL[13:0]														NL[15:0]															
	Reset value			0	0	0	0	0	0	0	0	0	0	0	0	0	0	0	0	0	0	0	0	0	0	0	0	0	0	0	0	0	0
0x0048	DMA2D_LWR	Reserved																LW[15:0]															
	Reset value																	0	0	0	0	0	0	0	0	0	0	0	0	0	0	0	0
0x004C	DMA2D_AMTCR	Reserved																DT[7:0]								Reserved							EN
	Reset value																	0	0	0	0	0	0	0	0								0
0x0050-Ox03FF	-	Reserved																															
0x0400-0x07FF	DMA2D_FGCLUT	APLHA[7:0][255:0]								RED[7:0][255:0]								GREEN[7:0][255:0]								BLUE[7:0][255:0]							
	Reset value	X	X	X	X	X	X	X	X	X	X	X	X	X	X	X	X	X	X	X	X	X	X	X	X	X	X	X	X	X	X	X	X
0x0800-0x0BFF	DMA2D_BGCLUT	APLHA[7:0][255:0]								RED[7:0][255:0]								GREEN[7:0][255:0]								BLUE[7:0][255:0]							
	Reset value	X	X	X	X	X	X	X	X	X	X	X	X	X	X	X	X	X	X	X	X	X	X	X	X	X	X	X	X	X	X	X	X

12 Interrupts and events

This Section applies to the whole STM32F4xx family, unless otherwise specified.

12.1 Nested vectored interrupt controller (NVIC)

12.1.1 NVIC features

The nested vector interrupt controller NVIC includes the following features:

- 82 maskable interrupt channels for STM32F405xx/07xx and STM32F415xx/17xx, and up to 91 maskable interrupt channels for STM32F42xxx and STM32F43xxx (not including the 16 interrupt lines of Cortex®-M4 with FPU)
- 16 programmable priority levels (4 bits of interrupt priority are used)
- low-latency exception and interrupt handling
- power management control
- implementation of system control registers

The NVIC and the processor core interface are closely coupled, which enables low latency interrupt processing and efficient processing of late arriving interrupts.

All interrupts including the core exceptions are managed by the NVIC. For more information on exceptions and NVIC programming, refer to programming manual PM0214.

12.1.2 SysTick calibration value register

The SysTick calibration value is fixed to 18750, which gives a reference time base of 1 ms with the SysTick clock set to 18.75 MHz (HCLK/8, with HCLK set to 150 MHz).

12.1.3 Interrupt and exception vectors

See *Table 62* and *Table 62*, for the vector table for the STM32F405xx/07xx and STM32F415xx/17xx and STM32F42xxx and STM32F43xxx devices.

12.2 External interrupt/event controller (EXTI)

The external interrupt/event controller consists of up to 23 edge detectors for generating event/interrupt requests. Each input line can be independently configured to select the type (interrupt or event) and the corresponding trigger event (rising or falling or both). Each line can also masked independently. A pending register maintains the status line of the interrupt requests.

Table 61. Vector table for STM32F405xx/07xx and STM32F415xx/17xx

Position	Priority	Type of priority	Acronym	Description	Address
	-	-	-	Reserved	0x0000 0000
	-3	fixed	Reset	Reset	0x0000 0004
	-2	fixed	NMI	Non maskable interrupt. The RCC Clock Security System (CSS) is linked to the NMI vector.	0x0000 0008
	-1	fixed	HardFault	All class of fault	0x0000 000C
	0	settable	MemManage	Memory management	0x0000 0010
	1	settable	BusFault	Pre-fetch fault, memory access fault	0x0000 0014
	2	settable	UsageFault	Undefined instruction or illegal state	0x0000 0018
	-	-	-	Reserved	0x0000 001C - 0x0000 002B
	3	settable	SVCall	System service call via SWI instruction	0x0000 002C
	4	settable	Debug Monitor	Debug Monitor	0x0000 0030
	-	-	-	Reserved	0x0000 0034
	5	settable	PendSV	Pendable request for system service	0x0000 0038
	6	settable	SysTick	System tick timer	0x0000 003C
0	7	settable	WWDG	Window Watchdog interrupt	0x0000 0040
1	8	settable	PVD	PVD through EXTI line detection interrupt	0x0000 0044
2	9	settable	TAMP_STAMP	Tamper and TimeStamp interrupts through the EXTI line	0x0000 0048
3	10	settable	RTC_WKUP	RTC Wakeup interrupt through the EXTI line	0x0000 004C
4	11	settable	FLASH	Flash global interrupt	0x0000 0050
5	12	settable	RCC	RCC global interrupt	0x0000 0054
6	13	settable	EXTI0	EXTI Line0 interrupt	0x0000 0058
7	14	settable	EXTI1	EXTI Line1 interrupt	0x0000 005C
8	15	settable	EXTI2	EXTI Line2 interrupt	0x0000 0060
9	16	settable	EXTI3	EXTI Line3 interrupt	0x0000 0064
10	17	settable	EXTI4	EXTI Line4 interrupt	0x0000 0068
11	18	settable	DMA1_Stream0	DMA1 Stream0 global interrupt	0x0000 006C

Table 61. Vector table for STM32F405xx/07xx and STM32F415xx/17xx (continued)

Position	Priority	Type of priority	Acronym	Description	Address
12	19	settable	DMA1_Stream1	DMA1 Stream1 global interrupt	0x0000 0070
13	20	settable	DMA1_Stream2	DMA1 Stream2 global interrupt	0x0000 0074
14	21	settable	DMA1_Stream3	DMA1 Stream3 global interrupt	0x0000 0078
15	22	settable	DMA1_Stream4	DMA1 Stream4 global interrupt	0x0000 007C
16	23	settable	DMA1_Stream5	DMA1 Stream5 global interrupt	0x0000 0080
17	24	settable	DMA1_Stream6	DMA1 Stream6 global interrupt	0x0000 0084
18	25	settable	ADC	ADC1, ADC2 and ADC3 global interrupts	0x0000 0088
19	26	settable	CAN1_TX	CAN1 TX interrupts	0x0000 008C
20	27	settable	CAN1_RX0	CAN1 RX0 interrupts	0x0000 0090
21	28	settable	CAN1_RX1	CAN1 RX1 interrupt	0x0000 0094
22	29	settable	CAN1_SCE	CAN1 SCE interrupt	0x0000 0098
23	30	settable	EXTI9_5	EXTI Line[9:5] interrupts	0x0000 009C
24	31	settable	TIM1_BRK_TIM9	TIM1 Break interrupt and TIM9 global interrupt	0x0000 00A0
25	32	settable	TIM1_UP_TIM10	TIM1 Update interrupt and TIM10 global interrupt	0x0000 00A4
26	33	settable	TIM1_TRG_COM_TIM11	TIM1 Trigger and Commutation interrupts and TIM11 global interrupt	0x0000 00A8
27	34	settable	TIM1_CC	TIM1 Capture Compare interrupt	0x0000 00AC
28	35	settable	TIM2	TIM2 global interrupt	0x0000 00B0
29	36	settable	TIM3	TIM3 global interrupt	0x0000 00B4
30	37	settable	TIM4	TIM4 global interrupt	0x0000 00B8
31	38	settable	I2C1_EV	I^2C1 event interrupt	0x0000 00BC
32	39	settable	I2C1_ER	I^2C1 error interrupt	0x0000 00C0
33	40	settable	I2C2_EV	I^2C2 event interrupt	0x0000 00C4
34	41	settable	I2C2_ER	I^2C2 error interrupt	0x0000 00C8
35	42	settable	SPI1	SPI1 global interrupt	0x0000 00CC
36	43	settable	SPI2	SPI2 global interrupt	0x0000 00D0
37	44	settable	USART1	USART1 global interrupt	0x0000 00D4
38	45	settable	USART2	USART2 global interrupt	0x0000 00D8
39	46	settable	USART3	USART3 global interrupt	0x0000 00DC

Table 61. Vector table for STM32F405xx/07xx and STM32F415xx/17xx (continued)

Position	Priority	Type of priority	Acronym	Description	Address
40	47	settable	EXTI15_10	EXTI Line[15:10] interrupts	0x0000 00E0
41	48	settable	RTC_Alarm	RTC Alarms (A and B) through EXTI line interrupt	0x0000 00E4
42	49	settable	OTG_FS_WKUP	USB On-The-Go FS Wakeup through EXTI line interrupt	0x0000 00E8
43	50	settable	TIM8_BRK_TIM12	TIM8 Break interrupt and TIM12 global interrupt	0x0000 00EC
44	51	settable	TIM8_UP_TIM13	TIM8 Update interrupt and TIM13 global interrupt	0x0000 00F0
45	52	settable	TIM8_TRG_COM_TIM14	TIM8 Trigger and Commutation interrupts and TIM14 global interrupt	0x0000 00F4
46	53	settable	TIM8_CC	TIM8 Capture Compare interrupt	0x0000 00F8
47	54	settable	DMA1_Stream7	DMA1 Stream7 global interrupt	0x0000 00FC
48	55	settable	FSMC	FSMC global interrupt	0x0000 0100
49	56	settable	SDIO	SDIO global interrupt	0x0000 0104
50	57	settable	TIM5	TIM5 global interrupt	0x0000 0108
51	58	settable	SPI3	SPI3 global interrupt	0x0000 010C
52	59	settable	UART4	UART4 global interrupt	0x0000 0110
53	60	settable	UART5	UART5 global interrupt	0x0000 0114
54	61	settable	TIM6_DAC	TIM6 global interrupt, DAC1 and DAC2 underrun error interrupts	0x0000 0118
55	62	settable	TIM7	TIM7 global interrupt	0x0000 011C
56	63	settable	DMA2_Stream0	DMA2 Stream0 global interrupt	0x0000 0120
57	64	settable	DMA2_Stream1	DMA2 Stream1 global interrupt	0x0000 0124
58	65	settable	DMA2_Stream2	DMA2 Stream2 global interrupt	0x0000 0128
59	66	settable	DMA2_Stream3	DMA2 Stream3 global interrupt	0x0000 012C
60	67	settable	DMA2_Stream4	DMA2 Stream4 global interrupt	0x0000 0130
61	68	settable	ETH	Ethernet global interrupt	0x0000 0134
62	69	settable	ETH_WKUP	Ethernet Wakeup through EXTI line interrupt	0x0000 0138
63	70	settable	CAN2_TX	CAN2 TX interrupts	0x0000 013C
64	71	settable	CAN2_RX0	CAN2 RX0 interrupts	0x0000 0140

Table 61. Vector table for STM32F405xx/07xx and STM32F415xx/17xx (continued)

Position	Priority	Type of priority	Acronym	Description	Address
65	72	settable	CAN2_RX1	CAN2 RX1 interrupt	0x0000 0144
66	73	settable	CAN2_SCE	CAN2 SCE interrupt	0x0000 0148
67	74	settable	OTG_FS	USB On The Go FS global interrupt	0x0000 014C
68	75	settable	DMA2_Stream5	DMA2 Stream5 global interrupt	0x0000 0150
69	76	settable	DMA2_Stream6	DMA2 Stream6 global interrupt	0x0000 0154
70	77	settable	DMA2_Stream7	DMA2 Stream7 global interrupt	0x0000 0158
71	78	settable	USART6	USART6 global interrupt	0x0000 015C
72	79	settable	I2C3_EV	I^2C3 event interrupt	0x0000 0160
73	80	settable	I2C3_ER	I^2C3 error interrupt	0x0000 0164
74	81	settable	OTG_HS_EP1_OUT	USB On The Go HS End Point 1 Out global interrupt	0x0000 0168
75	82	settable	OTG_HS_EP1_IN	USB On The Go HS End Point 1 In global interrupt	0x0000 016C
76	83	settable	OTG_HS_WKUP	USB On The Go HS Wakeup through EXTI interrupt	0x0000 0170
77	84	settable	OTG_HS	USB On The Go HS global interrupt	0x0000 0174
78	85	settable	DCMI	DCMI global interrupt	0x0000 0178
79	86	settable	CRYP	CRYP crypto global interrupt	0x0000 017C
80	87	settable	HASH_RNG	Hash and Rng global interrupt	0x0000 0180
81	88	settable	FPU	FPU global interrupt	0x0000 0184

Table 62. Vector table for STM32F42xxx and STM32F43xxx

Position	Priority	Type of priority	Acronym	Description	Address
	-	-	-	Reserved	0x0000 0000
	-3	fixed	Reset	Reset	0x0000 0004
	-2	fixed	NMI	Non maskable interrupt, Clock Security System	0x0000 0008

Table 62. Vector table for STM32F42xxx and STM32F43xxx (continued)

Position	Priority	Type of priority	Acronym	Description	Address
	-1	fixed	HardFault	All class of fault	0x0000 000C
	0	settable	MemManage	Memory management	0x0000 0010
	1	settable	BusFault	Pre-fetch fault, memory access fault	0x0000 0014
	2	settable	UsageFault	Undefined instruction or illegal state	0x0000 0018
	-	-	-	Reserved	0x0000 001C - 0x0000 002B
	3	settable	SVCall	System Service call via SWI instruction	0x0000 002C
	4	settable	Debug Monitor	Debug Monitor	0x0000 0030
		-	-	Reserved	0x0000 0034
	5	settable	PendSV	Pendable request for system service	0x0000 0038
	6	settable	Systick	System tick timer	0x0000 003C
0	7	settable	WWDG	Window Watchdog interrupt	0x0000 0040
1	8	settable	PVD	PVD through EXTI line detection interrupt	0x0000 0044
2	9	settable	TAMP_STAMP	Tamper and TimeStamp interrupts through the EXTI line	0x0000 0048
3	10	settable	RTC_WKUP	RTC Wakeup interrupt through the EXTI line	0x0000 004C
4	11	settable	FLASH	Flash global interrupt	0x0000 0050
5	12	settable	RCC	RCC global interrupt	0x0000 0054
6	13	settable	EXTI0	EXTI Line0 interrupt	0x0000 0058
7	14	settable	EXTI1	EXTI Line1 interrupt	0x0000 005C
8	15	settable	EXTI2	EXTI Line2 interrupt	0x0000 0060
9	16	settable	EXTI3	EXTI Line3 interrupt	0x0000 0064
10	17	settable	EXTI4	EXTI Line4 interrupt	0x0000 0068
11	18	settable	DMA1_Stream0	DMA1 Stream0 global interrupt	0x0000 006C
12	19	settable	DMA1_Stream1	DMA1 Stream1 global interrupt	0x0000 0070
13	20	settable	DMA1_Stream2	DMA1 Stream2 global interrupt	0x0000 0074
14	21	settable	DMA1_Stream3	DMA1 Stream3 global interrupt	0x0000 0078
15	22	settable	DMA1_Stream4	DMA1 Stream4 global interrupt	0x0000 007C
16	23	settable	DMA1_Stream5	DMA1 Stream5 global interrupt	0x0000 0080
17	24	settable	DMA1_Stream6	DMA1 Stream6 global interrupt	0x0000 0084

Table 62. Vector table for STM32F42xxx and STM32F43xxx (continued)

Position	Priority	Type of priority	Acronym	Description	Address
18	25	settable	ADC	ADC1, ADC2 and ADC3 global interrupts	0x0000 0088
19	26	settable	CAN1_TX	CAN1 TX interrupts	0x0000 008C
20	27	settable	CAN1_RX0	CAN1 RX0 interrupts	0x0000 0090
21	28	settable	CAN1_RX1	CAN1 RX1 interrupt	0x0000 0094
22	29	settable	CAN1_SCE	CAN1 SCE interrupt	0x0000 0098
23	30	settable	EXTI9_5	EXTI Line[9:5] interrupts	0x0000 009C
24	31	settable	TIM1_BRK_TIM9	TIM1 Break interrupt and TIM9 global interrupt	0x0000 00A0
25	32	settable	TIM1_UP_TIM10	TIM1 Update interrupt and TIM10 global interrupt	0x0000 00A4
26	33	settable	TIM1_TRG_COM_TIM11	TIM1 Trigger and Commutation interrupts and TIM11 global interrupt	0x0000 00A8
27	34	settable	TIM1_CC	TIM1 Capture Compare interrupt	0x0000 00AC
28	35	settable	TIM2	TIM2 global interrupt	0x0000 00B0
29	36	settable	TIM3	TIM3 global interrupt	0x0000 00B4
30	37	settable	TIM4	TIM4 global interrupt	0x0000 00B8
31	38	settable	I2C1_EV	I^2C1 event interrupt	0x0000 00BC
32	39	settable	I2C1_ER	I^2C1 error interrupt	0x0000 00C0
33	40	settable	I2C2_EV	I^2C2 event interrupt	0x0000 00C4
34	41	settable	I2C2_ER	I^2C2 error interrupt	0x0000 00C8
35	42	settable	SPI1	SPI1 global interrupt	0x0000 00CC
36	43	settable	SPI2	SPI2 global interrupt	0x0000 00D0
37	44	settable	USART1	USART1 global interrupt	0x0000 00D4
38	45	settable	USART2	USART2 global interrupt	0x0000 00D8
39	46	settable	USART3	USART3 global interrupt	0x0000 00DC
40	47	settable	EXTI15_10	EXTI Line[15:10] interrupts	0x0000 00E0
41	48	settable	RTC_Alarm	RTC Alarms (A and B) through EXTI line interrupt	0x0000 00E4
42	49	settable	OTG_FS_WKUP	USB On-The-Go FS Wakeup through EXTI line interrupt	0x0000 00E8
43	50	settable	TIM8_BRK_TIM12	TIM8 Break interrupt and TIM12 global interrupt	0x0000 00EC

Table 62. Vector table for STM32F42xxx and STM32F43xxx (continued)

Position	Priority	Type of priority	Acronym	Description	Address
44	51	settable	TIM8_UP_TIM13	TIM8 Update interrupt and TIM13 global interrupt	0x0000 00F0
45	52	settable	TIM8_TRG_COM_TIM14	TIM8 Trigger and Commutation interrupts and TIM14 global interrupt	0x0000 00F4
46	53	settable	TIM8_CC	TIM8 Capture Compare interrupt	0x0000 00F8
47	54	settable	DMA1_Stream7	DMA1 Stream7 global interrupt	0x0000 00FC
48	55	settable	FSMC	FSMC global interrupt	0x0000 0100
49	56	settable	SDIO	SDIO global interrupt	0x0000 0104
50	57	settable	TIM5	TIM5 global interrupt	0x0000 0108
51	58	settable	SPI3	SPI3 global interrupt	0x0000 010C
52	59	settable	UART4	UART4 global interrupt	0x0000 0110
53	60	settable	UART5	UART5 global interrupt	0x0000 0114
54	61	settable	TIM6_DAC	TIM6 global interrupt, DAC1 and DAC2 underrun error interrupts	0x0000 0118
55	62	settable	TIM7	TIM7 global interrupt	0x0000 011C
56	63	settable	DMA2_Stream0	DMA2 Stream0 global interrupt	0x0000 0120
57	64	settable	DMA2_Stream1	DMA2 Stream1 global interrupt	0x0000 0124
58	65	settable	DMA2_Stream2	DMA2 Stream2 global interrupt	0x0000 0128
59	66	settable	DMA2_Stream3	DMA2 Stream3 global interrupt	0x0000 012C
60	67	settable	DMA2_Stream4	DMA2 Stream4 global interrupt	0x0000 0130
61	68	settable	ETH	Ethernet global interrupt	0x0000 0134
62	69	settable	ETH_WKUP	Ethernet Wakeup through EXTI line interrupt	0x0000 0138
63	70	settable	CAN2_TX	CAN2 TX interrupts	0x0000 013C
64	71	settable	CAN2_RX0	CAN2 RX0 interrupts	0x0000 0140
65	72	settable	CAN2_RX1	CAN2 RX1 interrupt	0x0000 0144
66	73	settable	CAN2_SCE	CAN2 SCE interrupt	0x0000 0148
67	74	settable	OTG_FS	USB On The Go FS global interrupt	0x0000 014C
68	75	settable	DMA2_Stream5	DMA2 Stream5 global interrupt	0x0000 0150
69	76	settable	DMA2_Stream6	DMA2 Stream6 global interrupt	0x0000 0154
70	77	settable	DMA2_Stream7	DMA2 Stream7 global interrupt	0x0000 0158
71	78	settable	USART6	USART6 global interrupt	0x0000 015C

Table 62. Vector table for STM32F42xxx and STM32F43xxx (continued)

Position	Priority	Type of priority	Acronym	Description	Address
72	79	settable	I2C3_EV	I^2C3 event interrupt	0x0000 0160
73	80	settable	I2C3_ER	I^2C3 error interrupt	0x0000 0164
74	81	settable	OTG_HS_EP1_OUT	USB On The Go HS End Point 1 Out global interrupt	0x0000 0168
75	82	settable	OTG_HS_EP1_IN	USB On The Go HS End Point 1 In global interrupt	0x0000 016C
76	83	settable	OTG_HS_WKUP	USB On The Go HS Wakeup through EXTI interrupt	0x0000 0170
77	84	settable	OTG_HS	USB On The Go HS global interrupt	0x0000 0174
78	85	settable	DCMI	DCMI global interrupt	0x0000 0178
79	86	settable	CRYP	CRYP crypto global interrupt	0x0000 017C
80	87	settable	HASH_RNG	Hash and Rng global interrupt	0x0000 0180
81	88	Settable	FPU	FPU global interrupt	0x0000 0184
82	89	settable	UART7	UART 7 global interrupt	0x0000 0188
83	90	settable	UART8	UART 8 global interrupt	0x0000 018C
84	91	settable	SPI4	SPI 4 global interrupt	0x0000 0190
85	92	settable	SPI5	SPI 5 global interrupt	0x0000 0194
86	93	settable	SPI6	SPI 6 global interrupt	0x0000 0198
87	94	settable	SAI1	SAI1 global interrupt	0x0000 019C
88	95	settable	LCD-TFT	LTDC global interrupt	0x0000 01A0
89	96	settable	LCD-TFT	LTDC global Error interrupt	0x0000 01A4
90	97	settable	DMA2D	DMA2D global interrupt	0x0000 01A8

12.2.1 EXTI main features

The main features of the EXTI controller are the following:

- independent trigger and mask on each interrupt/event line
- dedicated status bit for each interrupt line
- generation of up to 23 software event/interrupt requests
- detection of external signals with a pulse width lower than the APB2 clock period. Refer to the electrical characteristics section of the STM32F4xx datasheets for details on this parameter.

12.2.2 EXTI block diagram

Figure 41 shows the block diagram.

Figure 41. External interrupt/event controller block diagram

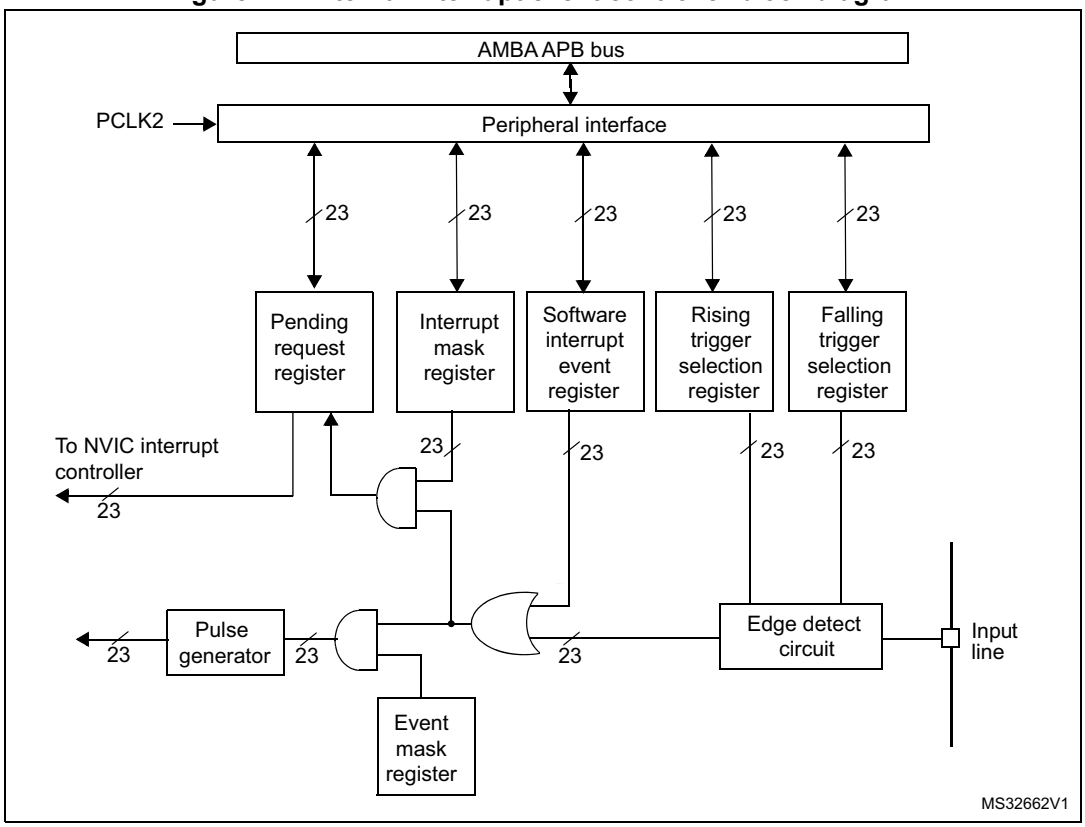

12.2.3 Wakeup event management

The STM32F4xx are able to handle external or internal events in order to wake up the core (WFE). The wakeup event can be generated either by:

- enabling an interrupt in the peripheral control register but not in the NVIC, and enabling the SEVONPEND bit in the Cortex®-M4 with FPU System Control register. When the MCU resumes from WFE, the peripheral interrupt pending bit and the peripheral NVIC IRQ channel pending bit (in the NVIC interrupt clear pending register) have to be cleared.
- or configuring an external or internal EXTI line in event mode. When the CPU resumes from WFE, it is not necessary to clear the peripheral interrupt pending bit or the NVIC IRQ channel pending bit as the pending bit corresponding to the event line is not set.

To use an external line as a wakeup event, refer to *Section 12.2.4: Functional description*.

12.2.4 Functional description

To generate the interrupt, the interrupt line should be configured and enabled. This is done by programming the two trigger registers with the desired edge detection and by enabling the interrupt request by writing a ‘1’ to the corresponding bit in the interrupt mask register. When the selected edge occurs on the external interrupt line, an interrupt request is

generated. The pending bit corresponding to the interrupt line is also set. This request is reset by writing a ‘1’ in the pending register.

To generate the event, the event line should be configured and enabled. This is done by programming the two trigger registers with the desired edge detection and by enabling the event request by writing a ‘1’ to the corresponding bit in the event mask register. When the selected edge occurs on the event line, an event pulse is generated. The pending bit corresponding to the event line is not set.

An interrupt/event request can also be generated by software by writing a ‘1’ in the software interrupt/event register.

Hardware interrupt selection

To configure the 23 lines as interrupt sources, use the following procedure:

- Configure the mask bits of the 23 interrupt lines (EXTI_IMR)
- Configure the Trigger selection bits of the interrupt lines (EXTI_RTSR and EXTI_FTSR)
- Configure the enable and mask bits that control the NVIC IRQ channel mapped to the external interrupt controller (EXTI) so that an interrupt coming from one of the 23 lines can be correctly acknowledged.

Hardware event selection

To configure the 23 lines as event sources, use the following procedure:

- Configure the mask bits of the 23 event lines (EXTI_EMR)
- Configure the Trigger selection bits of the event lines (EXTI_RTSR and EXTI_FTSR)

Software interrupt/event selection

The 23 lines can be configured as software interrupt/event lines. The following is the procedure to generate a software interrupt.

- Configure the mask bits of the 23 interrupt/event lines (EXTI_IMR, EXTI_EMR)
- Set the required bit in the software interrupt register (EXTI_SWIER)

12.2.5 External interrupt/event line mapping

Up to 140 GPIOs (STM32F405xx/07xx and STM32F415xx/17xx), 168 GPIOs (STM32F42xxx and STM32F43xxx) are connected to the 16 external interrupt/event lines in the following manner:

Figure 42. External interrupt/event GPIO mapping (STM32F405xx/07xx and STM32F415xx/17xx)

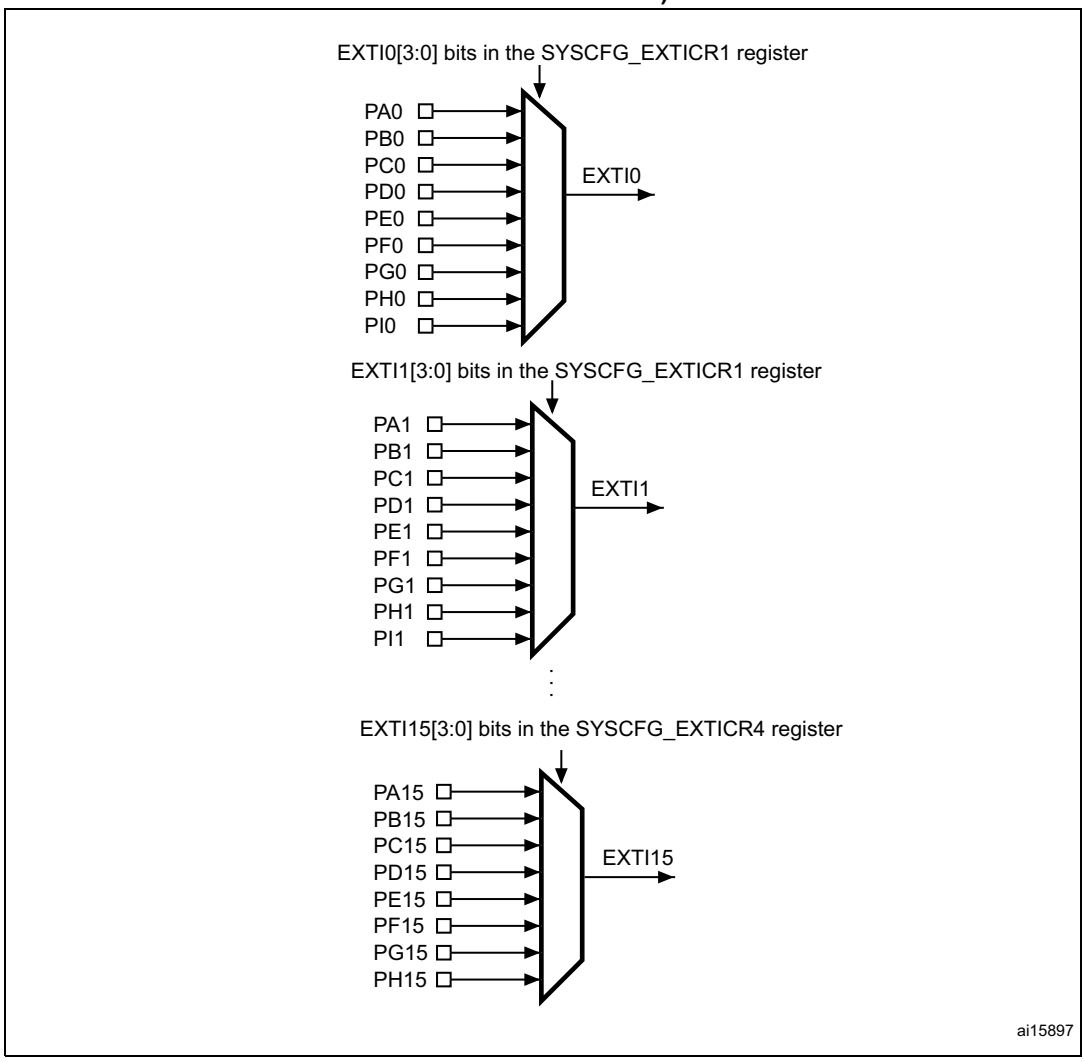

Figure 43. External interrupt/event GPIO mapping (STM32F42xxx and STM32F43xxx)

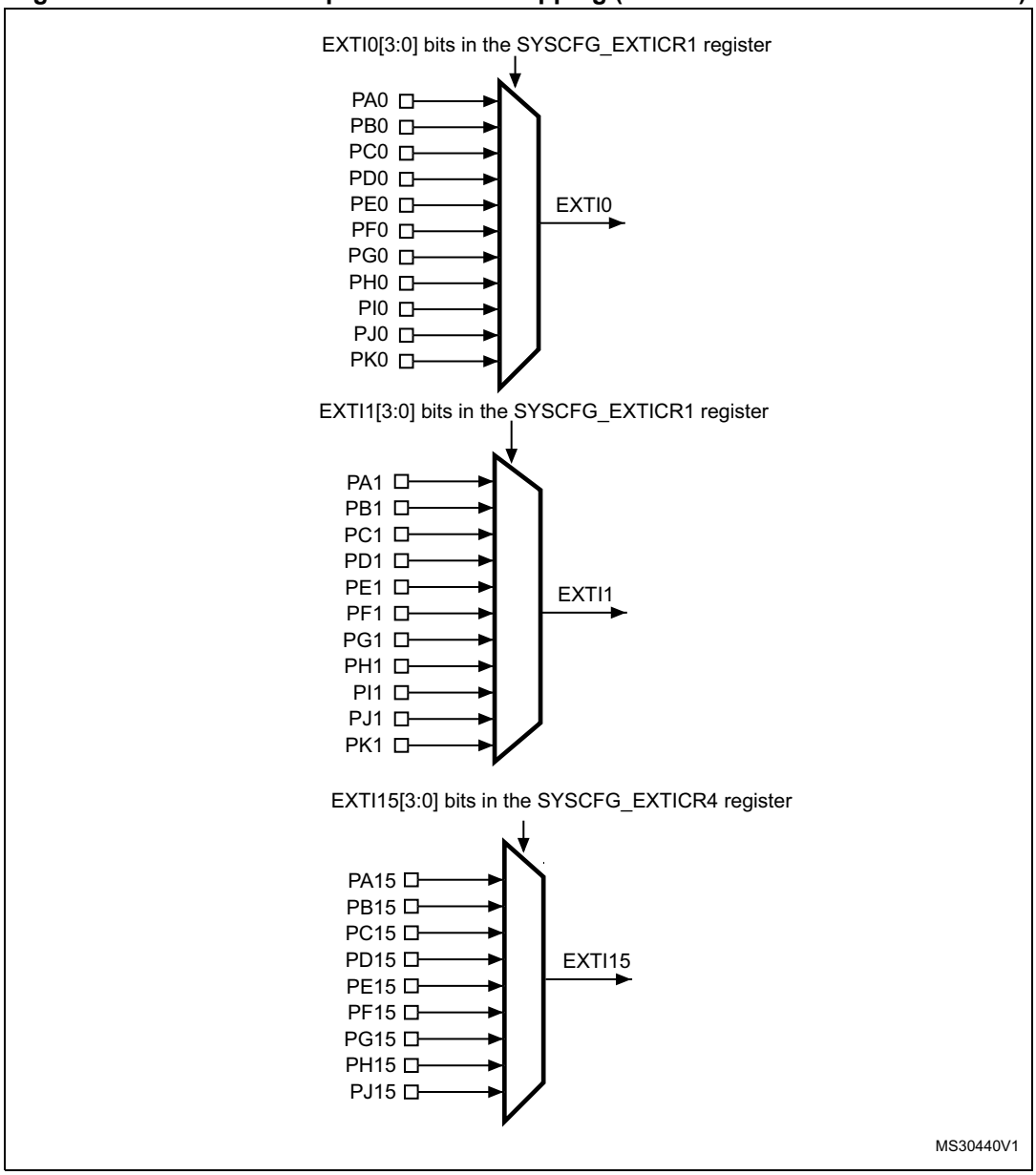

The seven other EXTI lines are connected as follows:

- EXTI line 16 is connected to the PVD output
- EXTI line 17 is connected to the RTC Alarm event
- EXTI line 18 is connected to the USB OTG FS Wakeup event
- EXTI line 19 is connected to the Ethernet Wakeup event
- EXTI line 20 is connected to the USB OTG HS (configured in FS) Wakeup event
- EXTI line 21 is connected to the RTC Tamper and TimeStamp events
- EXTI line 22 is connected to the RTC Wakeup event

12.3 EXTI registers

Refer to *Section 1.1: List of abbreviations for registers* for a list of abbreviations used in register descriptions.

12.3.1 Interrupt mask register (EXTI_IMR)

Address offset: 0x00

Reset value: 0x0000 0000

31	30	29	28	27	26	25	24	23	22	21	20	19	18	17	16
Reserved									MR22	MR21	MR20	MR19	MR18	MR17	MR16
									rw	rw	rw	rw	rw	rw	rw
15	14	13	12	11	10	9	8	7	6	5	4	3	2	1	0
MR15	MR14	MR13	MR12	MR11	MR10	MR9	MR8	MR7	MR6	MR5	MR4	MR3	MR2	MR1	MR0
rw	rw	rw	rw	rw	rw	rw	rw	rw	rw	rw	rw	rw	rw	rw	rw

Bits 31:23 Reserved, must be kept at reset value.

Bits 22:0 **MRx:** Interrupt mask on line x

0: Interrupt request from line x is masked
1: Interrupt request from line x is not masked

12.3.2 Event mask register (EXTI_EMR)

Address offset: 0x04
Reset value: 0x0000 0000

31	30	29	28	27	26	25	24	23	22	21	20	19	18	17	16
Reserved									MR22	MR21	MR20	MR19	MR18	MR17	MR16
									rw	rw	rw	rw	rw	rw	rw
15	14	13	12	11	10	9	8	7	6	5	4	3	2	1	0
MR15	MR14	MR13	MR12	MR11	MR10	MR9	MR8	MR7	MR6	MR5	MR4	MR3	MR2	MR1	MR0
rw	rw	rw	rw	rw	rw	rw	rw	rw	rw	rw	rw	rw	rw	rw	rw

Bits 31:23 Reserved, must be kept at reset value.

Bits 22:0 **MRx:** Event mask on line x

0: Event request from line x is masked
1: Event request from line x is not masked

12.3.3 Rising trigger selection register (EXTI_RTSR)

Address offset: 0x08
Reset value: 0x0000 0000

31	30	29	28	27	26	25	24	23	22	21	20	19	18	17	16
Reserved									TR22	TR21	TR20	TR19	TR18	TR17	TR16
									rw	rw	rw	rw	rw	rw	rw

15	14	13	12	11	10	9	8	7	6	5	4	3	2	1	0
TR15	TR14	TR13	TR12	TR11	TR10	TR9	TR8	TR7	TR6	TR5	TR4	TR3	TR2	TR1	TR0
rw	rw	rw	rw	rw	rw	rw	rw	rw	rw	rw	rw	rw	rw	rw	rw

Bits 31:23 Reserved, must be kept at reset value.

Bits 22:0 **TRx:** Rising trigger event configuration bit of line x
0: Rising trigger disabled (for Event and Interrupt) for input line
1: Rising trigger enabled (for Event and Interrupt) for input line

Note: The external wakeup lines are edge triggered, no glitch must be generated on these lines. If a rising edge occurs on the external interrupt line while writing to the EXTI_RTSR register, the pending bit is be set.

Rising and falling edge triggers can be set for the same interrupt line. In this configuration, both generate a trigger condition.

12.3.4 Falling trigger selection register (EXTI_FTSR)

Address offset: 0x0C
Reset value: 0x0000 0000

31	30	29	28	27	26	25	24	23	22	21	20	19	18	17	16
Reserved									TR22	TR21	TR20	TR19	TR18	TR17	TR16
									rw	rw	rw	rw	rw	rw	rw

15	14	13	12	11	10	9	8	7	6	5	4	3	2	1	0
TR15	TR14	TR13	TR12	TR11	TR10	TR9	TR8	TR7	TR6	TR5	TR4	TR3	TR2	TR1	TR0
rw	rw	rw	rw	rw	rw	rw	rw	rw	rw	rw	rw	rw	rw	rw	rw

Bits 31:23 Reserved, must be kept at reset value.

Bits 22:0 **TRx:** Falling trigger event configuration bit of line x
0: Falling trigger disabled (for Event and Interrupt) for input line
1: Falling trigger enabled (for Event and Interrupt) for input line.

Note: The external wakeup lines are edge triggered, no glitch must be generated on these lines. If a falling edge occurs on the external interrupt line while writing to the EXTI_FTSR register, the pending bit is not set.

Rising and falling edge triggers can be set for the same interrupt line. In this configuration, both generate a trigger condition.

12.3.5 Software interrupt event register (EXTI_SWIER)

Address offset: 0x10
Reset value: 0x0000 0000

31	30	29	28	27	26	25	24	23	22	21	20	19	18	17	16
Reserved									SWIER 22	SWIER 21	SWIER 20	SWIER 19	SWIER 18	SWIER 17	SWIER 16
									rw	rw	rw	rw	rw	rw	rw

15	14	13	12	11	10	9	8	7	6	5	4	3	2	1	0
SWIER 15	SWIER 14	SWIER 13	SWIER 12	SWIER 11	SWIER 10	SWIER 9	SWIER 8	SWIER 7	SWIER 6	SWIER 5	SWIER 4	SWIER 3	SWIER 2	SWIER 1	SWIER 0
rw	rw	rw	rw	rw	rw	rw	rw	rw	rw	rw	rw	rw	rw	rw	rw

Bits 31:23 Reserved, must be kept at reset value.

Bits 22:0 **SWIERx:** Software Interrupt on line x

If interrupt are enabled on line x in the EXTI_IMR register, writing '1' to SWIERx bit when it is set at '0' sets the corresponding pending bit in the EXTI_PR register, thus resulting in an interrupt request generation.

This bit is cleared by clearing the corresponding bit in EXTI_PR (by writing a 1 to the bit).

12.3.6 Pending register (EXTI_PR)

Address offset: 0x14
Reset value: undefined

31	30	29	28	27	26	25	24	23	22	21	20	19	18	17	16
Reserved									PR22	PR21	PR20	PR19	PR18	PR17	PR16
									rc_w1	rc_w1	rc_w1	rc_w1	rc_w1	rc_w1	rc_w1

15	14	13	12	11	10	9	8	7	6	5	4	3	2	1	0
PR15	PR14	PR13	PR12	PR11	PR10	PR9	PR8	PR7	PR6	PR5	PR4	PR3	PR2	PR1	PR0
rc_w1	rc_w1	rc_w1	rc_w1	rc_w1	rc_w1	rc_w1	rc_w1	rc_w1	rc_w1	rc_w1	rc_w1	rc_w1	rc_w1	rc_w1	rc_w1

Bits 31:23 Reserved, must be kept at reset value.

Bits 22:0 **PRx:** Pending bit

0: No trigger request occurred
1: selected trigger request occurred
This bit is set when the selected edge event arrives on the external interrupt line.
This bit is cleared by programming it to ‘1’.

12.3.7 EXTI register map

Table 64 gives the EXTI register map and the reset values.

Table 63. External interrupt/event controller register map and reset values

Offset	Register	31	30	29	28	27	26	25	24	23	22	21	20	19	18	17	16	15	14	13	12	11	10	9	8	7	6	5	4	3	2	1	0
0x00	**EXTI_IMR**	Reserved									MR[22:0]																						
	Reset value										0	0	0	0	0	0	0	0	0	0	0	0	0	0	0	0	0	0	0	0	0	0	0
0x04	**EXTI_EMR**	Reserved									MR[22:0]																						
	Reset value										0	0	0	0	0	0	0	0	0	0	0	0	0	0	0	0	0	0	0	0	0	0	0
0x08	**EXTI_RTSR**	Reserved									TR[22:0]																						
	Reset value										0	0	0	0	0	0	0	0	0	0	0	0	0	0	0	0	0	0	0	0	0	0	0
0x0C	**EXTI_FTSR**	Reserved									TR[22:0]																						
	Reset value										0	0	0	0	0	0	0	0	0	0	0	0	0	0	0	0	0	0	0	0	0	0	0
0x10	**EXTI_SWIER**	Reserved									SWIER[22:0]																						
	Reset value										0	0	0	0	0	0	0	0	0	0	0	0	0	0	0	0	0	0	0	0	0	0	0
0x14	**EXTI_PR**	Reserved									PR[22:0]																						
	Reset value										0	0	0	0	0	0	0	0	0	0	0	0	0	0	0	0	0	0	0	0	0	0	0

Refer to *Section 2.3: Memory map* for the register boundary addresses.

13 Analog-to-digital converter (ADC)

This section applies to the whole STM32F4xx family, unless otherwise specified.

13.1 ADC introduction

The 12-bit ADC is a successive approximation analog-to-digital converter. It has up to 19 multiplexed channels allowing it to measure signals from 16 external sources, two internal sources, and the V_{BAT} channel. The A/D conversion of the channels can be performed in single, continuous, scan or discontinuous mode. The result of the ADC is stored into a left- or right-aligned 16-bit data register.

The analog watchdog feature allows the application to detect if the input voltage goes beyond the user-defined, higher or lower thresholds.

13.2 ADC main features

- 12-bit, 10-bit, 8-bit or 6-bit configurable resolution
- Interrupt generation at the end of conversion, end of injected conversion, and in case of analog watchdog or overrun events
- Single and continuous conversion modes
- Scan mode for automatic conversion of channel 0 to channel ‘n’
- Data alignment with in-built data coherency
- Channel-wise programmable sampling time
- External trigger option with configurable polarity for both regular and injected conversions
- Discontinuous mode
- Dual/Triple mode (on devices with 2 ADCs or more)
- Configurable DMA data storage in Dual/Triple ADC mode
- Configurable delay between conversions in Dual/Triple interleaved mode
- ADC conversion type (refer to the datasheets)
- ADC supply requirements: 2.4 V to 3.6 V at full speed and down to 1.8 V at slower speed
- ADC input range: $V_{REF-} \leq V_{IN} \leq V_{REF+}$
- DMA request generation during regular channel conversion

Figure 44 shows the block diagram of the ADC.

Note: V_{REF-}, if available (depending on package), must be tied to V_{SSA}.

13.3 ADC functional description

Figure 44 shows a single ADC block diagram and *Table 65* gives the ADC pin description.

Figure 44. Single ADC block diagram

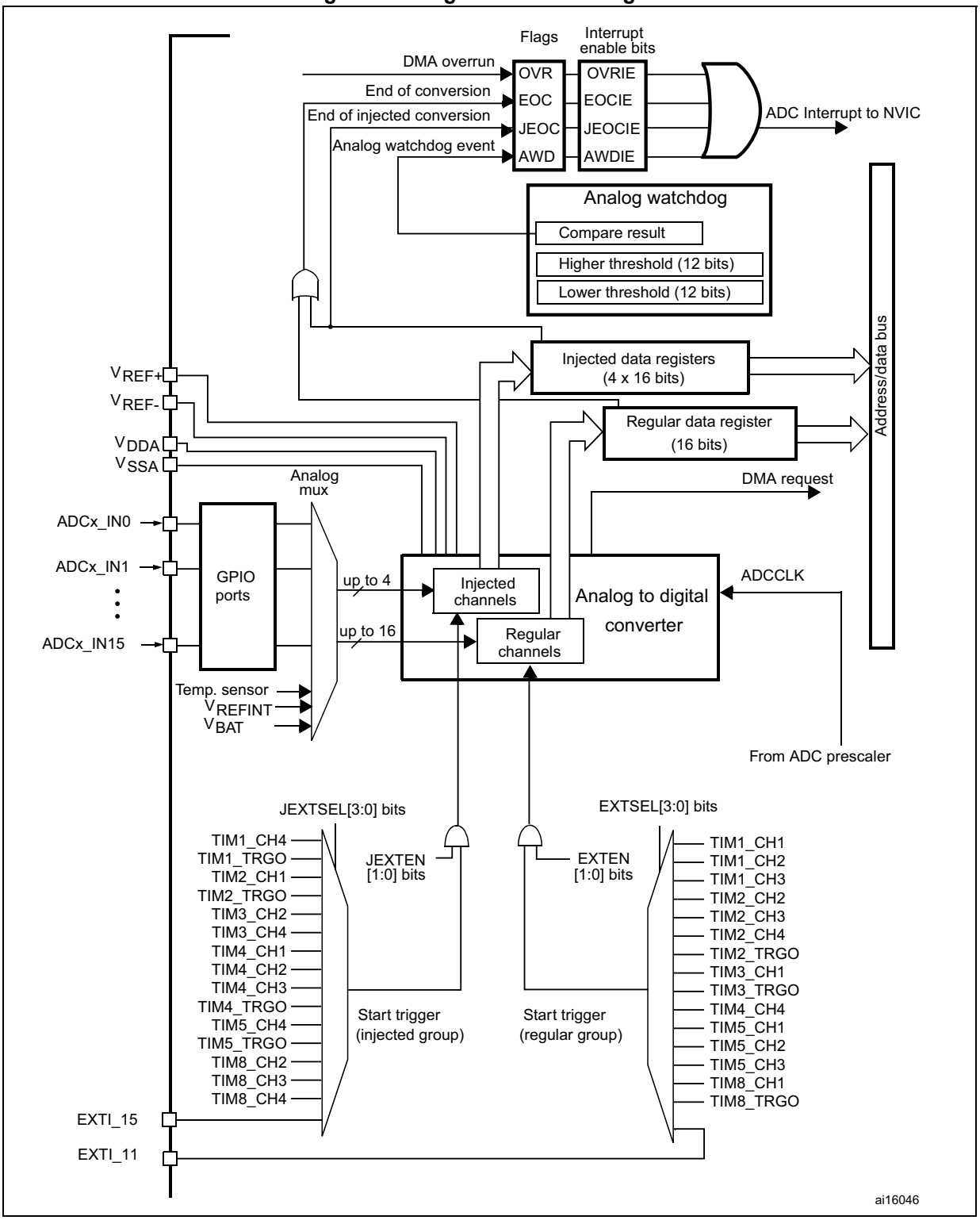

Table 65. ADC pins

Name	Signal type	Remarks
V_{REF+}	Input, analog reference positive	The higher/positive reference voltage for the ADC, 1.8 V $\leq V_{REF+} \leq V_{DDA}$
V_{DDA}	Input, analog supply	Analog power supply equal to V_{DD} and 2.4 V $\leq V_{DDA} \leq V_{DD}$ (3.6 V) for full speed 1.8 V $\leq V_{DDA} \leq V_{DD}$ (3.6 V) for reduced speed
V_{REF-}	Input, analog reference negative	The lower/negative reference voltage for the ADC, $V_{REF-} = V_{SSA}$
V_{SSA}	Input, analog supply ground	Ground for analog power supply equal to V_{SS}
ADCx_IN[15:0]	Analog input signals	16 analog input channels

13.3.1 ADC on-off control

The ADC is powered on by setting the ADON bit in the ADC_CR2 register. When the ADON bit is set for the first time, it wakes up the ADC from the Power-down mode.

Conversion starts when either the SWSTART or the JSWSTART bit is set.

You can stop conversion and put the ADC in power down mode by clearing the ADON bit. In this mode the ADC consumes almost no power (only a few µA).

13.3.2 ADC clock

The ADC features two clock schemes:

- Clock for the analog circuitry: ADCCLK, common to all ADCs

  This clock is generated from the APB2 clock divided by a programmable prescaler that allows the ADC to work at f_{PCLK2}/2, /4, /6 or /8. Refer to the datasheets for the maximum value of ADCCLK.
- Clock for the digital interface (used for registers read/write access)

  This clock is equal to the APB2 clock. The digital interface clock can be enabled/disabled individually for each ADC through the RCC APB2 peripheral clock enable register (RCC_APB2ENR).

13.3.3 Channel selection

There are 16 multiplexed channels. It is possible to organize the conversions in two groups: regular and injected. A group consists of a sequence of conversions that can be done on any channel and in any order. For instance, it is possible to implement the conversion sequence in the following order: ADC_IN3, ADC_IN8, ADC_IN2, ADC_IN2, ADC_IN0, ADC_IN2, ADC_IN2, ADC_IN15.

- A **regular group** is composed of up to 16 conversions. The regular channels and their order in the conversion sequence must be selected in the ADC_SQRx registers. The total number of conversions in the regular group must be written in the L[3:0] bits in the ADC_SQR1 register.
- An **injected group** is composed of up to 4 conversions. The injected channels and their order in the conversion sequence must be selected in the ADC_JSQR register.

The total number of conversions in the injected group must be written in the L[1:0] bits in the ADC_JSQR register.

If the ADC_SQRx or ADC_JSQR registers are modified during a conversion, the current conversion is reset and a new start pulse is sent to the ADC to convert the newly chosen group.

Temperature sensor, V_{REFINT} and V_{BAT} internal channels

- For the STM32F40x and STM32F41x devices, the temperature sensor is internally connected to channel ADC1_IN16.

  The internal reference voltage VREFINT is connected to ADC1_IN17.
- For the STM32F42x and STM32F43x devices, the temperature sensor is internally connected to ADC1_IN18 channel which is shared with VBAT. Only one conversion, temperature sensor or VBAT, must be selected at a time. When the temperature sensor and VBAT conversion are set simultaneously, only the VBAT conversion is performed.

  The internal reference voltage VREFINT is connected to ADC1_IN17.

The V_{BAT} channel (connected to channel ADC1_IN18) can also be converted as an injected or regular channel.

Note: The temperature sensor, V_{REFINT} and the V_{BAT} channel are available only on the master ADC1 peripheral.

13.3.4 Single conversion mode

In Single conversion mode the ADC does one conversion. This mode is started with the CONT bit at 0 by either:

- setting the SWSTART bit in the ADC_CR2 register (for a regular channel only)
- setting the JSWSTART bit (for an injected channel)
- external trigger (for a regular or injected channel)

Once the conversion of the selected channel is complete:

- If a regular channel was converted:
  - The converted data are stored into the 16-bit ADC_DR register
  - The EOC (end of conversion) flag is set
  - An interrupt is generated if the EOCIE bit is set
- If an injected channel was converted:
  - The converted data are stored into the 16-bit ADC_JDR1 register
  - The JEOC (end of conversion injected) flag is set
  - An interrupt is generated if the JEOCIE bit is set

Then the ADC stops.

13.3.5 Continuous conversion mode

In continuous conversion mode, the ADC starts a new conversion as soon as it finishes one. This mode is started with the CONT bit at 1 either by external trigger or by setting the SWSTRT bit in the ADC_CR2 register (for regular channels only).

After each conversion:

- If a regular group of channels was converted:
  - The last converted data are stored into the 16-bit ADC_DR register
  - The EOC (end of conversion) flag is set
  - An interrupt is generated if the EOCIE bit is set

Note: Injected channels cannot be converted continuously. The only exception is when an injected channel is configured to be converted automatically after regular channels in continuous mode (using JAUTO bit), refer to Auto-injection section).

13.3.6 Timing diagram

As shown in *Figure 45*, the ADC needs a stabilization time of t_{STAB} before it starts converting accurately. After the start of the ADC conversion and after 15 clock cycles, the EOC flag is set and the 16-bit ADC data register contains the result of the conversion.

Figure 45. Timing diagram

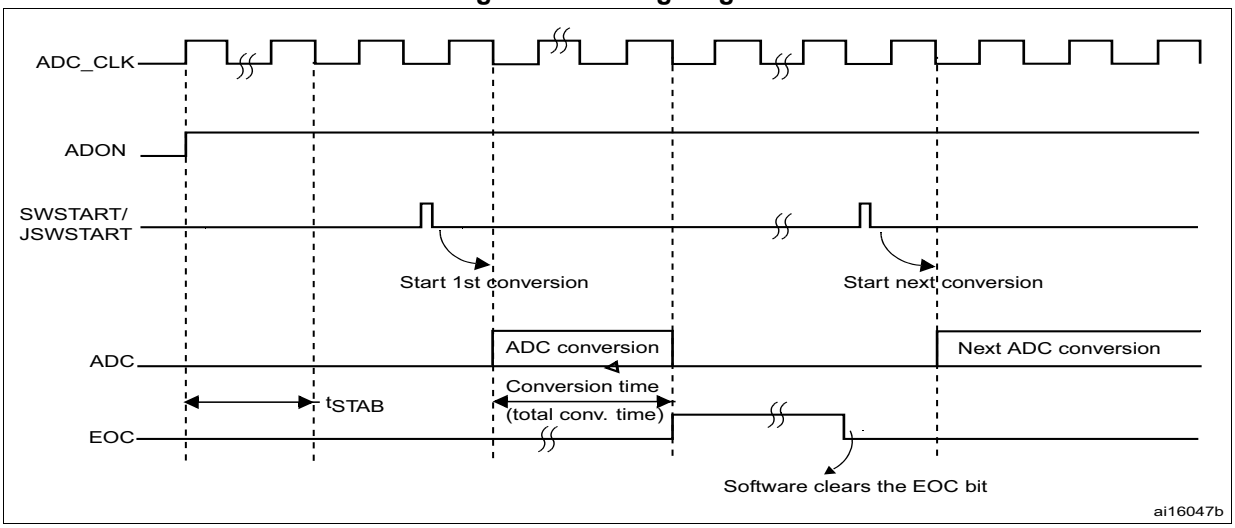

13.3.7 Analog watchdog

The AWD analog watchdog status bit is set if the analog voltage converted by the ADC is below a lower threshold or above a higher threshold. These thresholds are programmed in the 12 least significant bits of the ADC_HTR and ADC_LTR 16-bit registers. An interrupt can be enabled by using the AWDIE bit in the ADC_CR1 register.

The threshold value is independent of the alignment selected by the ALIGN bit in the ADC_CR2 register. The analog voltage is compared to the lower and higher thresholds before alignment.

Table 66 shows how the ADC_CR1 register should be configured to enable the analog watchdog on one or more channels.

Figure 46. Analog watchdog's guarded area

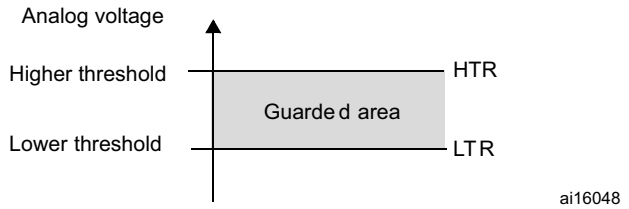

Table 66. Analog watchdog channel selection

Channels guarded by the analog watchdog	ADC_CR1 register control bits (x = don't care)		
	AWDSGL bit	AWDEN bit	JAWDEN bit
None	x	0	0
All injected channels	0	0	1
All regular channels	0	1	0
All regular and injected channels	0	1	1
Single(1) injected channel	1	0	1
Single(1) regular channel	1	1	0
Single (1) regular or injected channel	1	1	1

1. Selected by the AWDCH[4:0] bits

13.3.8 Scan mode

This mode is used to scan a group of analog channels.

The Scan mode is selected by setting the SCAN bit in the ADC_CR1 register. Once this bit has been set, the ADC scans all the channels selected in the ADC_SQRx registers (for regular channels) or in the ADC_JSQR register (for injected channels). A single conversion is performed for each channel of the group. After each end of conversion, the next channel in the group is converted automatically. If the CONT bit is set, regular channel conversion does not stop at the last selected channel in the group but continues again from the first selected channel.

If the DMA bit is set, the direct memory access (DMA) controller is used to transfer the data converted from the regular group of channels (stored in the ADC_DR register) to SRAM after each regular channel conversion.

The EOC bit is set in the ADC_SR register:

- At the end of each regular group sequence if the EOCS bit is cleared to 0
- At the end of each regular channel conversion if the EOCS bit is set to 1

The data converted from an injected channel are always stored into the ADC_JDRx registers.

13.3.9 Injected channel management

Triggered injection

To use triggered injection, the JAUTO bit must be cleared in the ADC_CR1 register.

1. Start the conversion of a group of regular channels either by external trigger or by setting the SWSTART bit in the ADC_CR2 register.
2. If an external injected trigger occurs or if the JSWSTART bit is set during the conversion of a regular group of channels, the current conversion is reset and the injected channel sequence switches to Scan-once mode.
3. Then, the regular conversion of the regular group of channels is resumed from the last interrupted regular conversion.
   If a regular event occurs during an injected conversion, the injected conversion is not interrupted but the regular sequence is executed at the end of the injected sequence. *Figure 47* shows the corresponding timing diagram.

Note: When using triggered injection, one must ensure that the interval between trigger events is longer than the injection sequence. For instance, if the sequence length is 30 ADC clock cycles (that is two conversions with a sampling time of 3 clock periods), the minimum interval between triggers must be 31 ADC clock cycles.

Auto-injection

If the JAUTO bit is set, then the channels in the injected group are automatically converted after the regular group of channels. This can be used to convert a sequence of up to 20 conversions programmed in the ADC_SQRx and ADC_JSQR registers.

In this mode, external trigger on injected channels must be disabled.

If the CONT bit is also set in addition to the JAUTO bit, regular channels followed by injected channels are continuously converted.

Note: It is not possible to use both the auto-injected and discontinuous modes simultaneously.

Figure 47. Injected conversion latency

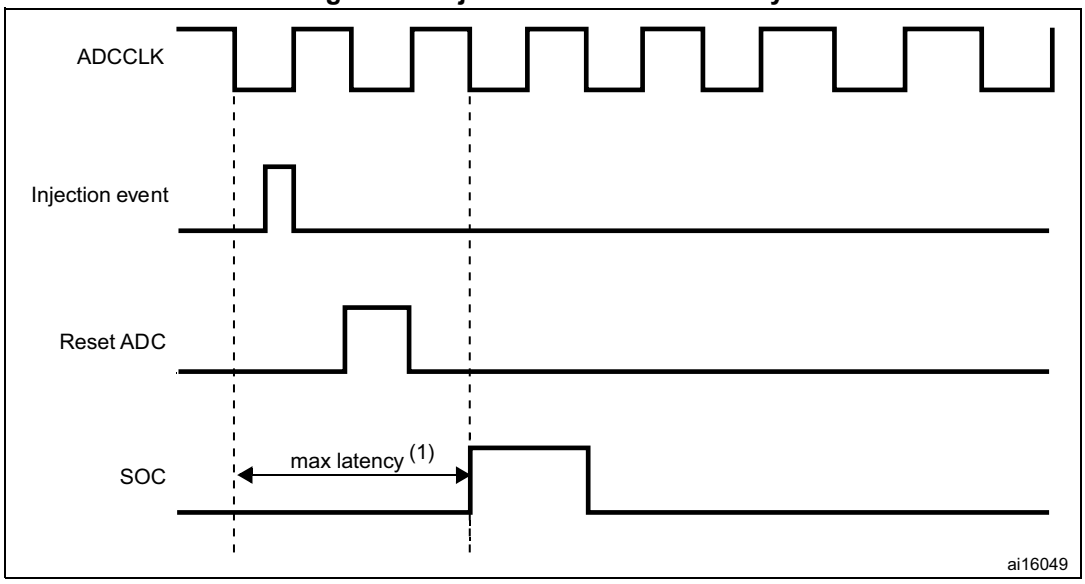

1. The maximum latency value can be found in the electrical characteristics of the STM32F40x and STM32F41x datasheets.

13.3.10 Discontinuous mode

Regular group

This mode is enabled by setting the DISCEN bit in the ADC_CR1 register. It can be used to convert a short sequence of n conversions (n ≤8) that is part of the sequence of conversions selected in the ADC_SQRx registers. The value of n is specified by writing to the DISCNUM[2:0] bits in the ADC_CR1 register.

When an external trigger occurs, it starts the next n conversions selected in the ADC_SQRx registers until all the conversions in the sequence are done. The total sequence length is defined by the L[3:0] bits in the ADC_SQR1 register.

Example:

- n = 3, channels to be converted = 0, 1, 2, 3, 6, 7, 9, 10
- 1st trigger: sequence converted 0, 1, 2. An EOC event is generated at each conversion.
- 2nd trigger: sequence converted 3, 6, 7. An EOC event is generated at each conversion
- 3rd trigger: sequence converted 9, 10.An EOC event is generated at each conversion
- 4th trigger: sequence converted 0, 1, 2. An EOC event is generated at each conversion

Note: When a regular group is converted in discontinuous mode, no rollover occurs.

When all subgroups are converted, the next trigger starts the conversion of the first subgroup. In the example above, the 4th trigger reconverts the channels 0, 1 and 2 in the 1st subgroup.

Injected group

This mode is enabled by setting the JDISCEN bit in the ADC_CR1 register. It can be used to convert the sequence selected in the ADC_JSQR register, channel by channel, after an external trigger event.

When an external trigger occurs, it starts the next channel conversions selected in the ADC_JSQR registers until all the conversions in the sequence are done. The total sequence length is defined by the JL[1:0] bits in the ADC_JSQR register.

Example:

n = 1, channels to be converted = 1, 2, 3
1st trigger: channel 1 converted
2nd trigger: channel 2 converted
3rd trigger: channel 3 converted and JEOC event generated
4th trigger: channel 1

Note: When all injected channels are converted, the next trigger starts the conversion of the first injected channel. In the example above, the 4th trigger reconverts the 1st injected channel 1.

It is not possible to use both the auto-injected and discontinuous modes simultaneously.

Discontinuous mode must not be set for regular and injected groups at the same time. Discontinuous mode must be enabled only for the conversion of one group.

13.4 Data alignment

The ALIGN bit in the ADC_CR2 register selects the alignment of the data stored after conversion. Data can be right- or left-aligned as shown in *Figure 48* and *Figure 49*.

The converted data value from the injected group of channels is decreased by the user-defined offset written in the ADC_JOFRx registers so the result can be a negative value. The SEXT bit represents the extended sign value.

For channels in a regular group, no offset is subtracted so only twelve bits are significant.

Figure 48. Right alignment of 12-bit data

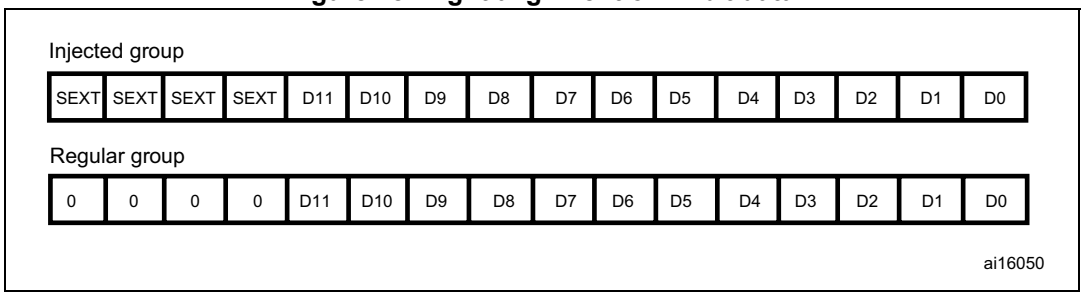

Figure 49. Left alignment of 12-bit data

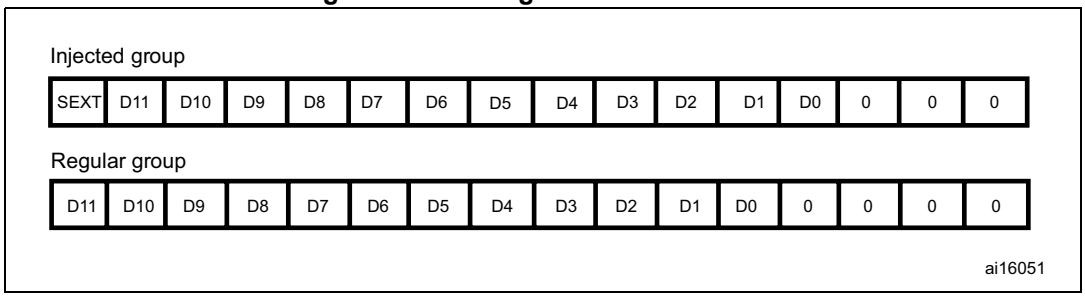

Special case: when left-aligned, the data are aligned on a half-word basis except when the resolution is set to 6-bit. in that case, the data are aligned on a byte basis as shown in *Figure 50*.

Figure 50. Left alignment of 6-bit data

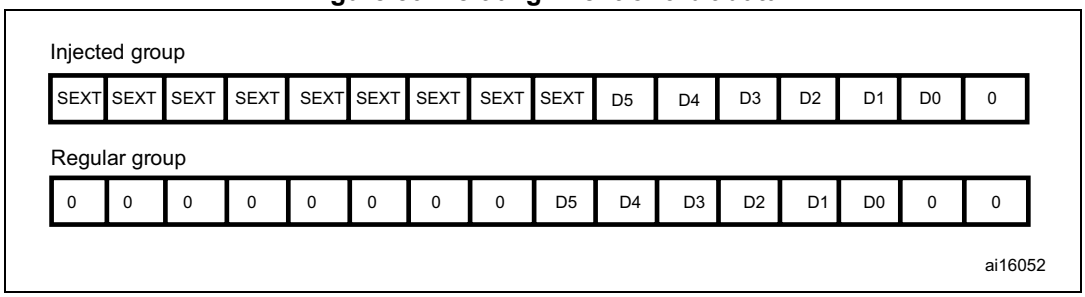

13.5 Channel-wise programmable sampling time

The ADC samples the input voltage for a number of ADCCLK cycles that can be modified using the SMP[2:0] bits in the ADC_SMPR1 and ADC_SMPR2 registers. Each channel can be sampled with a different sampling time.

The total conversion time is calculated as follows:

T_{conv} = Sampling time + 12 cycles

Example:

With ADCCLK = 30 MHz and sampling time = 3 cycles:

T_{conv} = 3 + 12 = 15 cycles = 0.5 µs with APB2 at 60 MHz

13.6 Conversion on external trigger and trigger polarity

Conversion can be triggered by an external event (e.g. timer capture, EXTI line). If the EXTEN[1:0] control bits (for a regular conversion) or JEXTEN[1:0] bits (for an injected conversion) are different from “0b00”, then external events are able to trigger a conversion with the selected polarity. *Table 67* provides the correspondence between the EXTEN[1:0] and JEXTEN[1:0] values and the trigger polarity.

Table 67. Configuring the trigger polarity

Source	EXTEN[1:0] / JEXTEN[1:0]
Trigger detection disabled	00
Detection on the rising edge	01
Detection on the falling edge	10
Detection on both the rising and falling edges	11

Note: The polarity of the external trigger can be changed on the fly.

The EXTSEL[3:0] and JEXTSEL[3:0] control bits are used to select which out of 16 possible events can trigger conversion for the regular and injected groups.

Table 68 gives the possible external trigger for regular conversion.

Table 68. External trigger for regular channels

Source	Type	EXTSEL[3:0]
TIM1_CH1 event	Internal signal from on-chip timers	0000
TIM1_CH2 event		0001
TIM1_CH3 event		0010
TIM2_CH2 event		0011
TIM2_CH3 event		0100
TIM2_CH4 event		0101
TIM2_TRGO event		0110
TIM3_CH1 event		0111
TIM3_TRGO event		1000
TIM4_CH4 event		1001
TIM5_CH1 event		1010
TIM5_CH2 event		1011
TIM5_CH3 event		1100
TIM8_CH1 event		1101
TIM8_TRGO event		1110
EXTI line11	External pin	1111

Table 69 gives the possible external trigger for injected conversion.

Table 69. External trigger for injected channels

Source	Connection type	JEXTSEL[3:0]
TIM1_CH4 event	Internal signal from on-chip timers	0000
TIM1_TRGO event		0001
TIM2_CH1 event		0010
TIM2_TRGO event		0011
TIM3_CH2 event		0100
TIM3_CH4 event		0101
TIM4_CH1 event		0110
TIM4_CH2 event		0111
TIM4_CH3 event		1000
TIM4_TRGO event		1001
TIM5_CH4 event		1010
TIM5_TRGO event		1011
TIM8_CH2 event		1100
TIM8_CH3 event		1101
TIM8_CH4 event		1110
EXTI line15	External pin	1111

Software source trigger events can be generated by setting SWSTART (for regular conversion) or JSWSTART (for injected conversion) in ADC_CR2.

A regular group conversion can be interrupted by an injected trigger.

Note: The trigger selection can be changed on the fly. However, when the selection changes, there is a time frame of 1 APB clock cycle during which the trigger detection is disabled. This is to avoid spurious detection during transitions.

13.7 Fast conversion mode

It is possible to perform faster conversion by reducing the ADC resolution. The RES bits are used to select the number of bits available in the data register. The minimum conversion time for each resolution is then as follows:

- 12 bits: 3 + 12 = 15 ADCCLK cycles
- 10 bits: 3 + 10 = 13 ADCCLK cycles
- 8 bits: 3 + 8 = 11 ADCCLK cycles
- 6 bits: 3 + 6 = 9 ADCCLK cycles

13.8 Data management

13.8.1 Using the DMA

Since converted regular channel values are stored into a unique data register, it is useful to use DMA for conversion of more than one regular channel. This avoids the loss of the data already stored in the ADC_DR register.

When the DMA mode is enabled (DMA bit set to 1 in the ADC_CR2 register), after each conversion of a regular channel, a DMA request is generated. This allows the transfer of the converted data from the ADC_DR register to the destination location selected by the software.

Despite this, if data are lost (overrun), the OVR bit in the ADC_SR register is set and an interrupt is generated (if the OVRIE enable bit is set). DMA transfers are then disabled and DMA requests are no longer accepted. In this case, if a DMA request is made, the regular conversion in progress is aborted and further regular triggers are ignored. It is then necessary to clear the OVR flag and the DMAEN bit in the used DMA stream, and to re-initialize both the DMA and the ADC to have the wanted converted channel data transferred to the right memory location. Only then can the conversion be resumed and the data transfer, enabled again. Injected channel conversions are not impacted by overrun errors.

When OVR = 1 in DMA mode, the DMA requests are blocked after the last valid data have been transferred, which means that all the data transferred to the RAM can be considered as valid.

At the end of the last DMA transfer (number of transfers configured in the DMA controller's DMA_SxNTR register):

- No new DMA request is issued to the DMA controller if the DDS bit is cleared to 0 in the ADC_CR2 register (this avoids generating an overrun error). However the DMA bit is not cleared by hardware. It must be written to 0, then to 1 to start a new transfer.
- Requests can continue to be generated if the DDS bit is set to 1. This allows configuring the DMA in double-buffer circular mode.

To recover the ADC from OVR state when the DMA is used, follow the steps below:

1. Reinitialize the DMA (adjust destination address and NDTR counter)
2. Clear the ADC OVR bit in ADC_SR register
3. Trigger the ADC to start the conversion.

13.8.2 Managing a sequence of conversions without using the DMA

If the conversions are slow enough, the conversion sequence can be handled by the software. In this case the EOCS bit must be set in the ADC_CR2 register for the EOC status bit to be set at the end of each conversion, and not only at the end of the sequence. When EOCS = 1, overrun detection is automatically enabled. Thus, each time a conversion is complete, EOC is set and the ADC_DR register can be read. The overrun management is the same as when the DMA is used.

To recover the ADC from OVR state when the EOCS is set, follow the steps below:

1. Clear the ADC OVR bit in ADC_SR register
2. Trigger the ADC to start the conversion.

13.8.3 Conversions without DMA and without overrun detection

It may be useful to let the ADC convert one or more channels without reading the data each time (if there is an analog watchdog for instance). For that, the DMA must be disabled (DMA = 0) and the EOC bit must be set at the end of a sequence only (EOCS = 0). In this configuration, overrun detection is disabled.

13.9 Multi ADC mode

In devices with two ADCs or more, the Dual (with two ADCs) and Triple (with three ADCs) ADC modes can be used (see *Figure 51*).

In multi ADC mode, the start of conversion is triggered alternately or simultaneously by the ADC1 master to the ADC2 and ADC3 slaves, depending on the mode selected by the MULTI[4:0] bits in the ADC_CCR register.

Note: In multi ADC mode, when configuring conversion trigger by an external event, the application must set trigger by the master only and disable trigger by slaves to prevent spurious triggers that would start unwanted slave conversions.

The four possible modes below are implemented:

- Injected simultaneous mode
- Regular simultaneous mode
- Interleaved mode
- Alternate trigger mode

It is also possible to use the previous modes combined in the following ways:

- Injected simultaneous mode + Regular simultaneous mode
- Regular simultaneous mode + Alternate trigger mode

Note: In multi ADC mode, the converted data can be read on the multi-mode data register (ADC_CDR). The status bits can be read in the multi-mode status register (ADC_CSR).

Figure 51. Multi ADC block diagram(1)

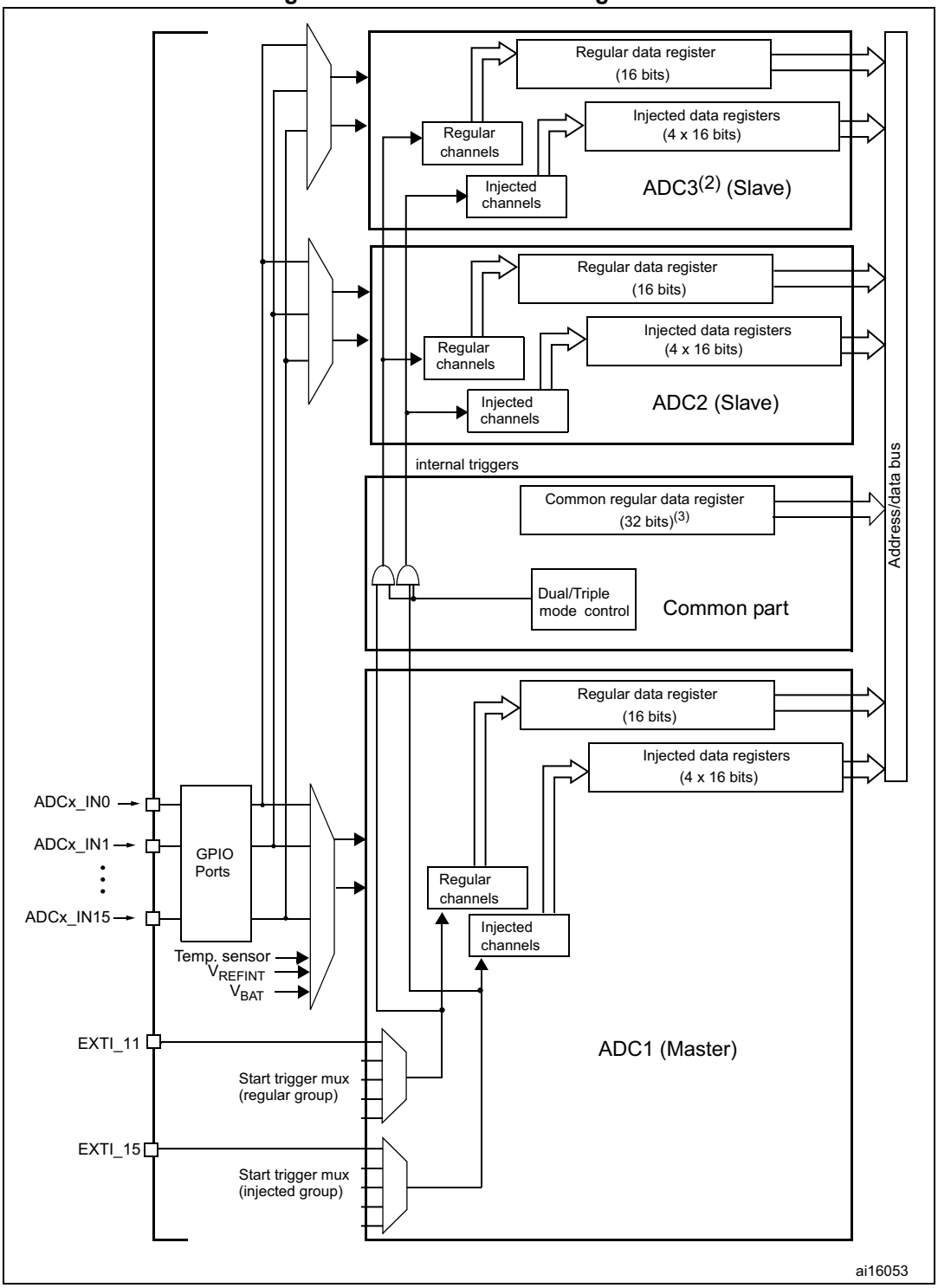

1. Although external triggers are present on ADC2 and ADC3 they are not shown in this diagram.
2. In the Dual ADC mode, the ADC3 slave part is not present.
3. In Triple ADC mode, the ADC common data register (ADC_CDR) contains the ADC1, ADC2 and ADC3's regular converted data. All 32 register bits are used according to a selected storage order.
In Dual ADC mode, the ADC common data register (ADC_CDR) contains both the ADC1 and ADC2's regular converted data. All 32 register bits are used.

- DMA requests in Multi ADC mode:

  In Multi ADC mode the DMA may be configured to transfer converted data in three different modes. In all cases, the DMA streams to use are those connected to the ADC:

  – **DMA mode 1:** On each DMA request (one data item is available), a half-word representing an ADC-converted data item is transferred.

    In Triple ADC mode, ADC1 data are transferred on the first request, ADC2 data are transferred on the second request and ADC3 data are transferred on the third request; the sequence is repeated. So the DMA first transfers ADC1 data followed by ADC2 data followed by ADC3 data and so on.

    DMA mode 1 is used in regular simultaneous triple mode only.

    Example:

    Regular simultaneous triple mode: 3 consecutive DMA requests are generated (one for each converted data item)

    1st request: ADC_CDR[31:0] = ADC1_DR[15:0]

    2nd request: ADC_CDR[31:0] = ADC2_DR[15:0]

    3rd request: ADC_CDR[31:0] = ADC3_DR[15:0]

    4th request: ADC_CDR[31:0] = ADC1_DR[15:0]

  – **DMA mode 2**: On each DMA request (two data items are available) two half-words representing two ADC-converted data items are transferred as a word.

    In Dual ADC mode, both ADC2 and ADC1 data are transferred on the first request (ADC2 data take the upper half-word and ADC1 data take the lower half-word) and so on.

    In Triple ADC mode, three DMA requests are generated. On the first request, both ADC2 and ADC1 data are transferred (ADC2 data take the upper half-word and ADC1 data take the lower half-word). On the second request, both ADC1 and ADC3 data are transferred (ADC1 data take the upper half-word and ADC3 data take the lower half-word).On the third request, both ADC3 and ADC2 data are transferred (ADC3 data take the upper half-word and ADC2 data take the lower half-word) and so on.

    DMA mode 2 is used in interleaved mode and in regular simultaneous mode (for Dual ADC mode only).

    Example:

    a) Interleaved dual mode: a DMA request is generated each time 2 data items are available:

    1st request: ADC_CDR[31:0] = ADC2_DR[15:0] | ADC1_DR[15:0]

    2nd request: ADC_CDR[31:0] = ADC2_DR[15:0] | ADC1_DR[15:0]

    b) Interleaved triple mode: a DMA request is generated each time 2 data items are available

    1st request: ADC_CDR[31:0] = ADC2_DR[15:0] | ADC1_DR[15:0]

    2nd request: ADC_CDR[31:0] = ADC1_DR[15:0] | ADC3_DR[15:0]

    3rd request: ADC_CDR[31:0] = ADC3_DR[15:0] | ADC2_DR[15:0]

    4th request: ADC_CDR[31:0] = ADC2_DR[15:0] | ADC1_DR[15:0]

  – **DMA mode 3**: This mode is similar to the DMA mode 2. The only differences are that the on each DMA request (two data items are available) two bytes

representing two ADC converted data items are transferred as a half-word. The data transfer order is similar to that of the DMA mode 2.

DMA mode 3 is used in interleaved mode in 6-bit and 8-bit resolutions (dual and triple mode).

Example:

a) Interleaved dual mode: a DMA request is generated each time 2 data items are available

1st request: ADC_CDR[15:0] = ADC2_DR[7:0] | ADC1_DR[7:0]

2nd request: ADC_CDR[15:0] = ADC2_DR[7:0] | ADC1_DR[7:0]

b) Interleaved triple mode: a DMA request is generated each time 2 data items are available

1st request: ADC_CDR[15:0] = ADC2_DR[7:0] | ADC1_DR[7:0]

2nd request: ADC_CDR[15:0] = ADC1_DR[7:0] | ADC3_DR[7:0]

3rd request: ADC_CDR[15:0] = ADC3_DR[7:0] | ADC2_DR[7:0]

4th request: ADC_CDR[15:0] = ADC2_DR[7:0] | ADC1_DR[7:0]

Overrun detection: If an overrun is detected on one of the concerned ADCs (ADC1 and ADC2 in dual and triple modes, ADC3 in triple mode only), the DMA requests are no longer issued to ensure that all the data transferred to the RAM are valid. It may happen that the EOC bit corresponding to one ADC remains set because the data register of this ADC contains valid data.

13.9.1 Injected simultaneous mode

This mode converts an injected group of channels. The external trigger source comes from the injected group multiplexer of ADC1 (selected by the JEXTSEL[3:0] bits in the ADC1_CR2 register). A simultaneous trigger is provided to ADC2 and ADC3.

Note: Do not convert the same channel on the two/three ADCs (no overlapping sampling times for the two/three ADCs when converting the same channel).

In simultaneous mode, one must convert sequences with the same length or ensure that the interval between triggers is longer than the longer of the 2 sequences (Dual ADC mode) /3 sequences (Triple ADC mode). Otherwise, the ADC with the shortest sequence may restart while the ADC with the longest sequence is completing the previous conversions.

Regular conversions can be performed on one or all ADCs. In that case, they are independent of each other and are interrupted when an injected event occurs. They are resumed at the end of the injected conversion group.

Dual ADC mode

At the end of conversion event on ADC1 or ADC2:

- The converted data are stored into the ADC_JDRx registers of each ADC interface.
- A JEOC interrupt is generated (if enabled on one of the two ADC interfaces) when the ADC1/ADC2's injected channels have all been converted.

Figure 52. Injected simultaneous mode on 4 channels: dual ADC mode

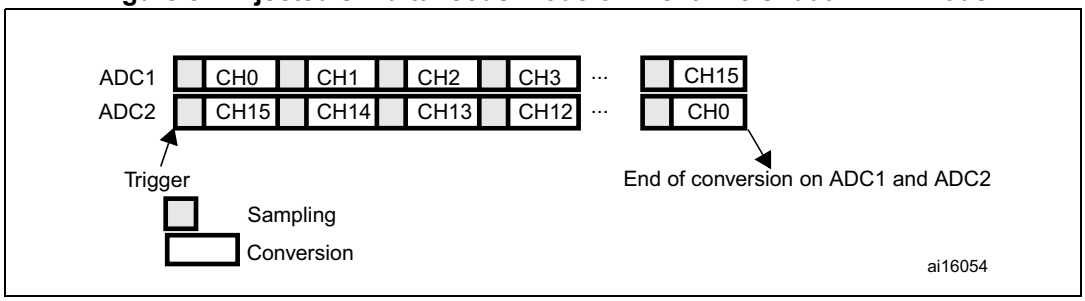

Triple ADC mode

At the end of conversion event on ADC1, ADC2 or ADC3:

- The converted data are stored into the ADC_JDRx registers of each ADC interface.
- A JEOC interrupt is generated (if enabled on one of the three ADC interfaces) when the ADC1/ADC2/ADC3's injected channels have all been converted.

Figure 53. Injected simultaneous mode on 4 channels: triple ADC mode

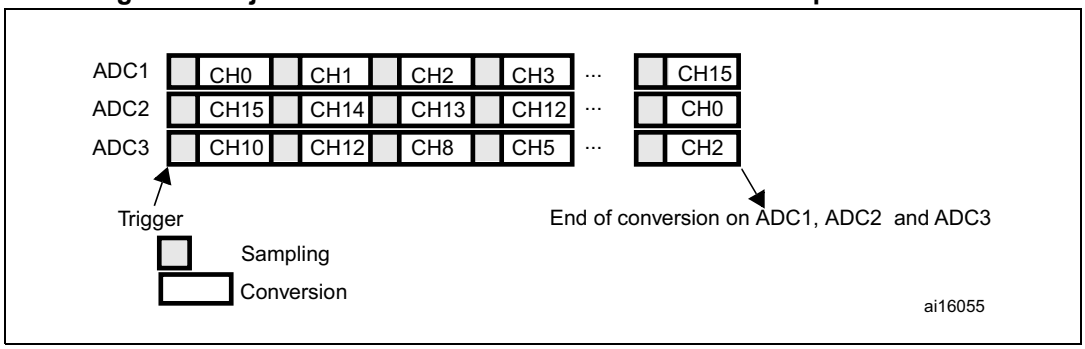

13.9.2 Regular simultaneous mode

This mode is performed on a regular group of channels. The external trigger source comes from the regular group multiplexer of ADC1 (selected by the EXTSEL[3:0] bits in the ADC1_CR2 register). A simultaneous trigger is provided to ADC2 and ADC3.

Note: Do not convert the same channel on the two/three ADCs (no overlapping sampling times for the two/three ADCs when converting the same channel).

In regular simultaneous mode, one must convert sequences with the same length or ensure that the interval between triggers is longer than the long conversion time of the 2 sequences (Dual ADC mode) /3 sequences (Triple ADC mode). Otherwise, the ADC with the shortest sequence may restart while the ADC with the longest sequence is completing the previous conversions.

Injected conversions must be disabled.

Dual ADC mode

At the end of conversion event on ADC1 or ADC2:

- A 32-bit DMA transfer request is generated (if DMA[1:0] bits in the ADC_CCR register are equal to 0b10). This request transfers the ADC2 converted data stored in the upper half-word of the ADC_CDR 32-bit register to the SRAM and then the ADC1 converted data stored in the lower half-word of ADC_CDR to the SRAM.
- An EOC interrupt is generated (if enabled on one of the two ADC interfaces) when the ADC1/ADC2's regular channels have all been converted.

Figure 54. Regular simultaneous mode on 16 channels: dual ADC mode

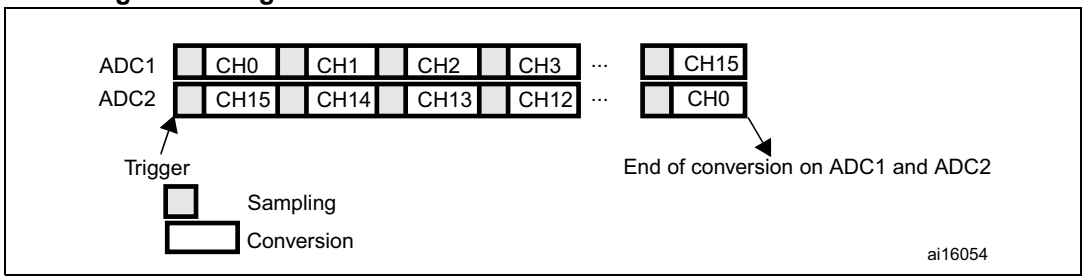

Triple ADC mode

At the end of conversion event on ADC1, ADC2 or ADC3:

- Three 32-bit DMA transfer requests are generated (if DMA[1:0] bits in the ADC_CCR register are equal to 0b01). Three transfers then take place from the ADC_CDR 32-bit register to SRAM: first the ADC1 converted data, then the ADC2 converted data and finally the ADC3 converted data. The process is repeated for each new three conversions.
- An EOC interrupt is generated (if enabled on one of the three ADC interfaces) when the ADC1/ADC2/ADC3's regular channels are have all been converted.

Figure 55. Regular simultaneous mode on 16 channels: triple ADC mode

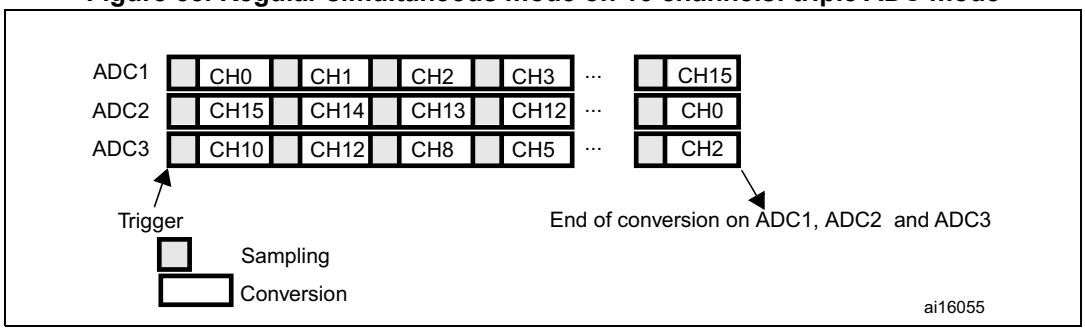

13.9.3 Interleaved mode

This mode can be started only on a regular group (usually one channel). The external trigger source comes from the regular channel multiplexer of ADC1.

Dual ADC mode

After an external trigger occurs:

- ADC1 starts immediately
- ADC2 starts after a delay of several-ADC clock cycles

The minimum delay which separates 2 conversions in interleaved mode is configured in the DELAY bits in the ADC_CCR register. However, an ADC cannot start a conversion if the complementary ADC is still sampling its input (only one ADC can sample the input signal at a given time). In this case, the delay becomes the sampling time + 2 ADC clock cycles. For instance, if DELAY = 5 clock cycles and the sampling takes 15 clock cycles on both ADCs, then 17 clock cycles will separate conversions on ADC1 and ADC2).

If the CONT bit is set on both ADC1 and ADC2, the selected regular channels of both ADCs are continuously converted.

Note: If the conversion sequence is interrupted (for instance when DMA end of transfer occurs), the multi-ADC sequencer must be reset by configuring it in independent mode first (bits DUAL[4:0] = 00000) before reprogramming the interleaved mode.

After an EOC interrupt is generated by ADC2 (if enabled through the EOCIE bit) a 32-bit DMA transfer request is generated (if the DMA[1:0] bits in ADC_CCR are equal to 0b10). This request first transfers the ADC2 converted data stored in the upper half-word of the ADC_CDR 32-bit register into SRAM, then the ADC1 converted data stored in the register's lower half-word into SRAM.

Figure 56. Interleaved mode on 1 channel in continuous conversion mode: dual ADC mode

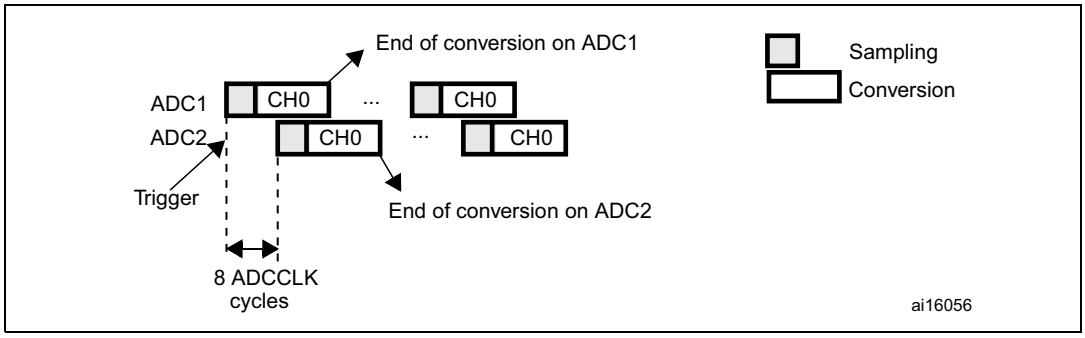

Triple ADC mode

After an external trigger occurs:

- ADC1 starts immediately and
- ADC2 starts after a delay of several ADC clock cycles
- ADC3 starts after a delay of several ADC clock cycles referred to the ADC2 conversion

The minimum delay which separates 2 conversions in interleaved mode is configured in the DELAY bits in the ADC_CCR register. However, an ADC cannot start a conversion if the complementary ADC is still sampling its input (only one ADC can sample the input signal at

a given time). In this case, the delay becomes the sampling time + 2 ADC clock cycles. For instance, if DELAY = 5 clock cycles and the sampling takes 15 clock cycles on the three ADCs, then 17 clock cycles will separate the conversions on ADC1, ADC2 and ADC3).

If the CONT bit is set on ADC1, ADC2 and ADC3, the selected regular channels of all ADCs are continuously converted.

Note: If the conversion sequence is interrupted (for instance when DMA end of transfer occurs), the multi-ADC sequencer must be reset by configuring it in independent mode first (bits DUAL[4:0] = 00000) before reprogramming the interleaved mode.

In this mode a DMA request is generated each time 2 data items are available, (if the DMA[1:0] bits in the ADC_CCR register are equal to 0b10). The request first transfers the first converted data stored in the lower half-word of the ADC_CDR 32-bit register to SRAM, then it transfers the second converted data stored in ADC_CDR's upper half-word to SRAM. The sequence is the following:

- 1st request: ADC_CDR[31:0] = ADC2_DR[15:0] | ADC1_DR[15:0]
- 2nd request: ADC_CDR[31:0] = ADC1_DR[15:0] | ADC3_DR[15:0]
- 3rd request: ADC_CDR[31:0] = ADC3_DR[15:0] | ADC2_DR[15:0]
- 4th request: ADC_CDR[31:0] = ADC2_DR[15:0] | ADC1_DR[15:0], ...

Figure 57. Interleaved mode on 1 channel in continuous conversion mode: triple ADC mode

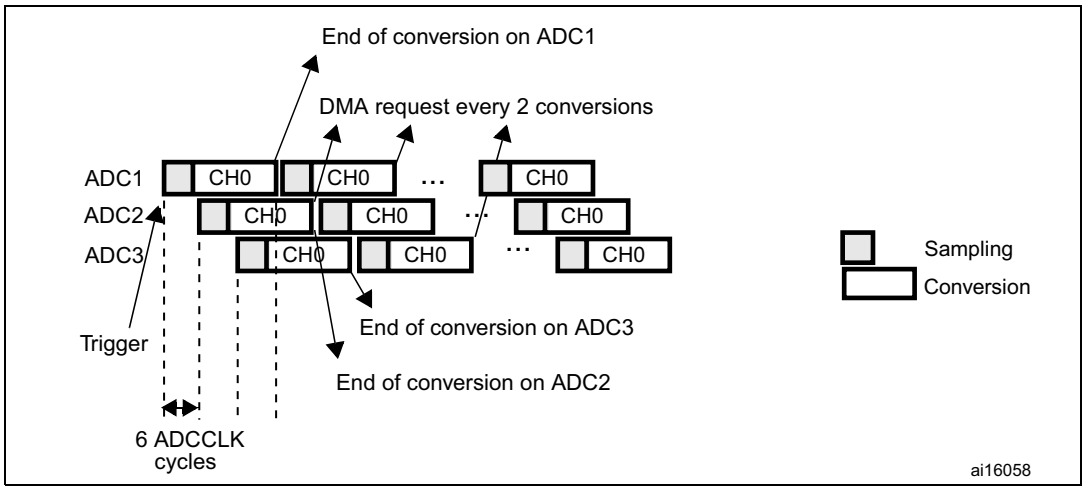

13.9.4 Alternate trigger mode

This mode can be started only on an injected group. The source of external trigger comes from the injected group multiplexer of ADC1.

Note: Regular conversions can be enabled on one or all ADCs. In this case the regular conversions are independent of each other. A regular conversion is interrupted when the

ADC has to perform an injected conversion. It is resumed when the injected conversion is finished.

If the conversion sequence is interrupted (for instance when DMA end of transfer occurs), the multi-ADC sequencer must be reset by configuring it in independent mode first (bits DUAL[4:0] = 00000) before reprogramming the interleaved mode.

The time interval between 2 trigger events must be greater than or equal to 1 ADC clock period. The minimum time interval between 2 trigger events that start conversions on the same ADC is the same as in the single ADC mode.

Dual ADC mode

- When the 1st trigger occurs, all injected ADC1 channels in the group are converted
- When the 2nd trigger occurs, all injected ADC2 channels in the group are converted
- and so on

A JEOC interrupt, if enabled, is generated after all injected ADC1 channels in the group have been converted.

A JEOC interrupt, if enabled, is generated after all injected ADC2 channels in the group have been converted.

If another external trigger occurs after all injected channels in the group have been converted then the alternate trigger process restarts by converting the injected ADC1 channels in the group.

Figure 58. Alternate trigger: injected group of each ADC

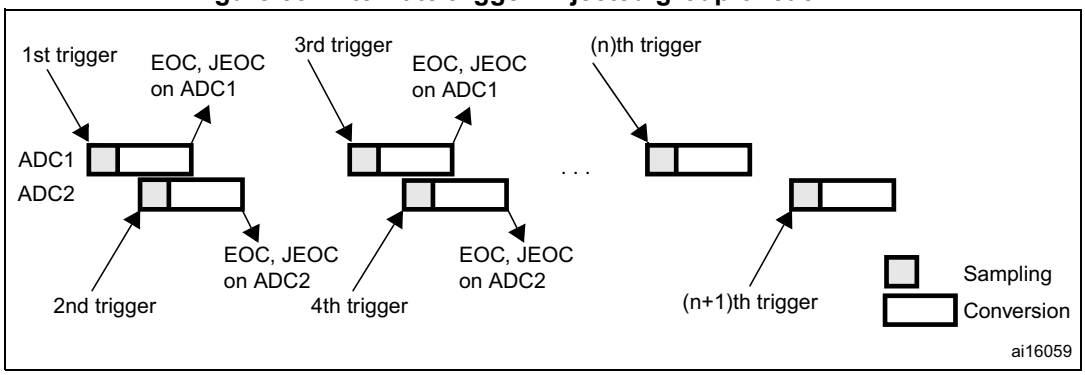

If the injected discontinuous mode is enabled for both ADC1 and ADC2:

- When the 1st trigger occurs, the first injected ADC1 channel is converted.
- When the 2nd trigger occurs, the first injected ADC2 channel are converted
- and so on

A JEOC interrupt, if enabled, is generated after all injected ADC1 channels in the group have been converted.

A JEOC interrupt, if enabled, is generated after all injected ADC2 channels in the group have been converted.

If another external trigger occurs after all injected channels in the group have been converted then the alternate trigger process restarts.

Figure 59. Alternate trigger: 4 injected channels (each ADC) in discontinuous mode

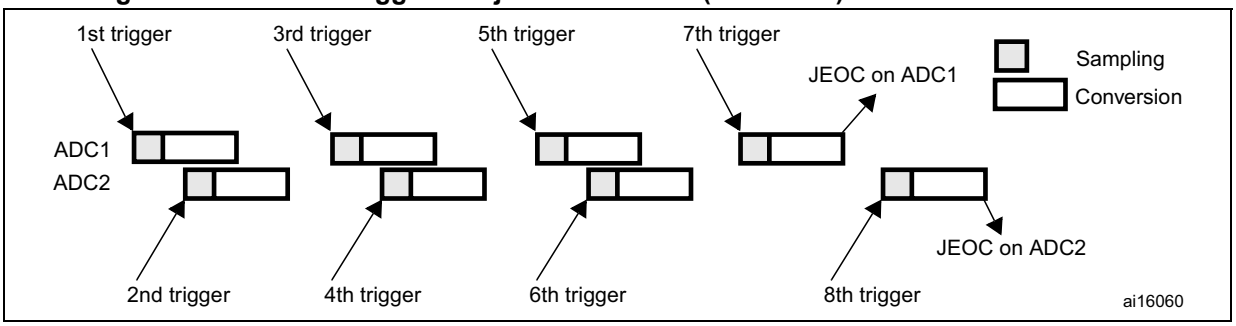

Triple ADC mode

- When the 1st trigger occurs, all injected ADC1 channels in the group are converted.
- When the 2nd trigger occurs, all injected ADC2 channels in the group are converted.
- When the 3rd trigger occurs, all injected ADC3 channels in the group are converted.
- and so on

A JEOC interrupt, if enabled, is generated after all injected ADC1 channels in the group have been converted.

A JEOC interrupt, if enabled, is generated after all injected ADC2 channels in the group have been converted.

A JEOC interrupt, if enabled, is generated after all injected ADC3 channels in the group have been converted.

If another external trigger occurs after all injected channels in the group have been converted then the alternate trigger process restarts by converting the injected ADC1 channels in the group.

Figure 60. Alternate trigger: injected group of each ADC

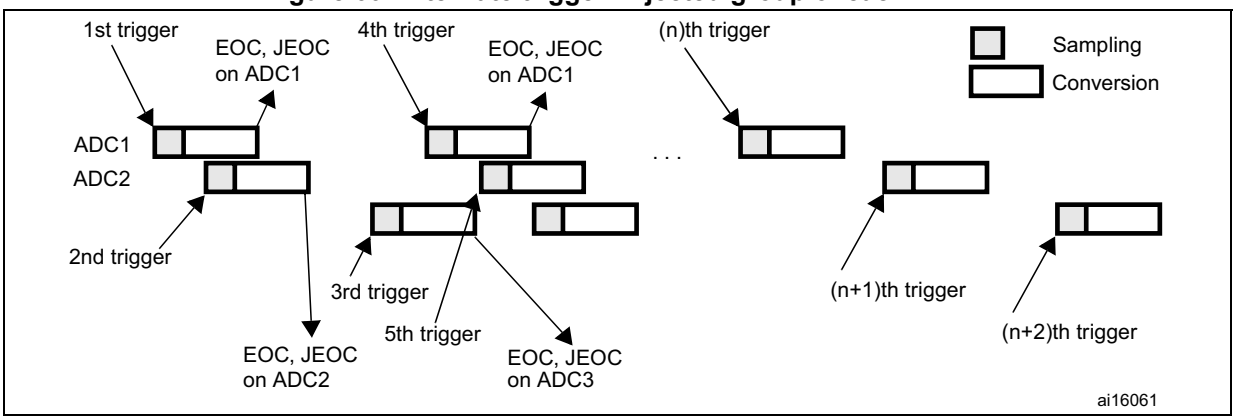

13.9.5 Combined regular/injected simultaneous mode

It is possible to interrupt the simultaneous conversion of a regular group to start the simultaneous conversion of an injected group.

Note: In combined regular/injected simultaneous mode, one must convert sequences with the same length or ensure that the interval between triggers is longer than the long conversion time of the 2 sequences (Dual ADC mode) /3 sequences (Triple ADC mode). Otherwise, the

ADC with the shortest sequence may restart while the ADC with the longest sequence is completing the previous conversions.

13.9.6 Combined regular simultaneous + alternate trigger mode

It is possible to interrupt the simultaneous conversion of a regular group to start the alternate trigger conversion of an injected group. *Figure 61* shows the behavior of an alternate trigger interrupting a simultaneous regular conversion.

The injected alternate conversion is immediately started after the injected event. If regular conversion is already running, in order to ensure synchronization after the injected conversion, the regular conversion of all (master/slave) ADCs is stopped and resumed synchronously at the end of the injected conversion.

Note: In combined regular simultaneous + alternate trigger mode, one must convert sequences with the same length or ensure that the interval between triggers is longer than the long conversion time of the 2 sequences (Dual ADC mode) /3 sequences (Triple ADC mode). Otherwise, the ADC with the shortest sequence may restart while the ADC with the longest sequence is completing the previous conversions.

If the conversion sequence is interrupted (for instance when DMA end of transfer occurs), the multi-ADC sequencer must be reset by configuring it in independent mode first (bits DUAL[4:0] = 00000) before reprogramming the interleaved mode.

Figure 61. Alternate + regular simultaneous

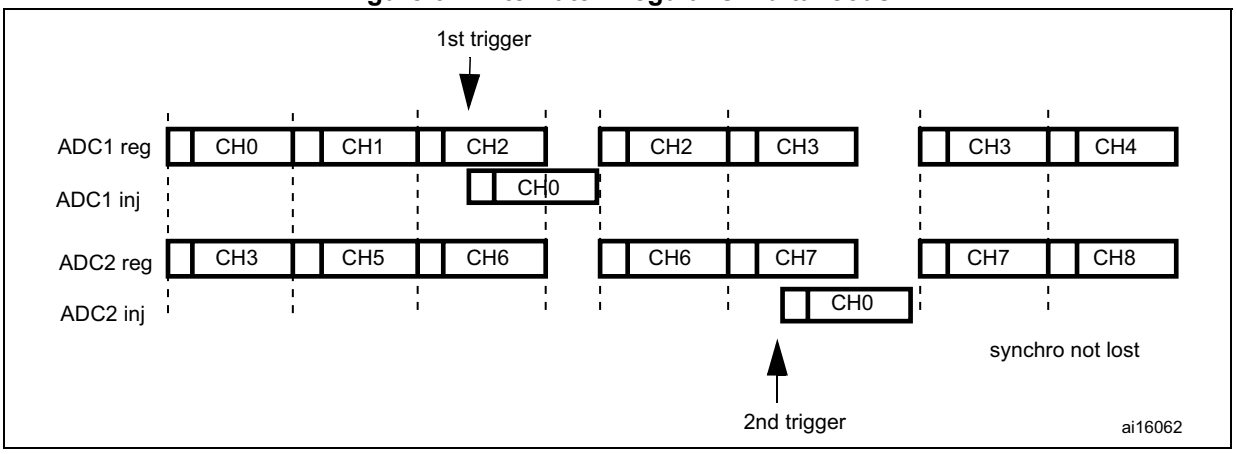

If a trigger occurs during an injected conversion that has interrupted a regular conversion, it is ignored. *Figure 62* shows the behavior in this case (2nd trigger is ignored).

Figure 62. Case of trigger occurring during injected conversion

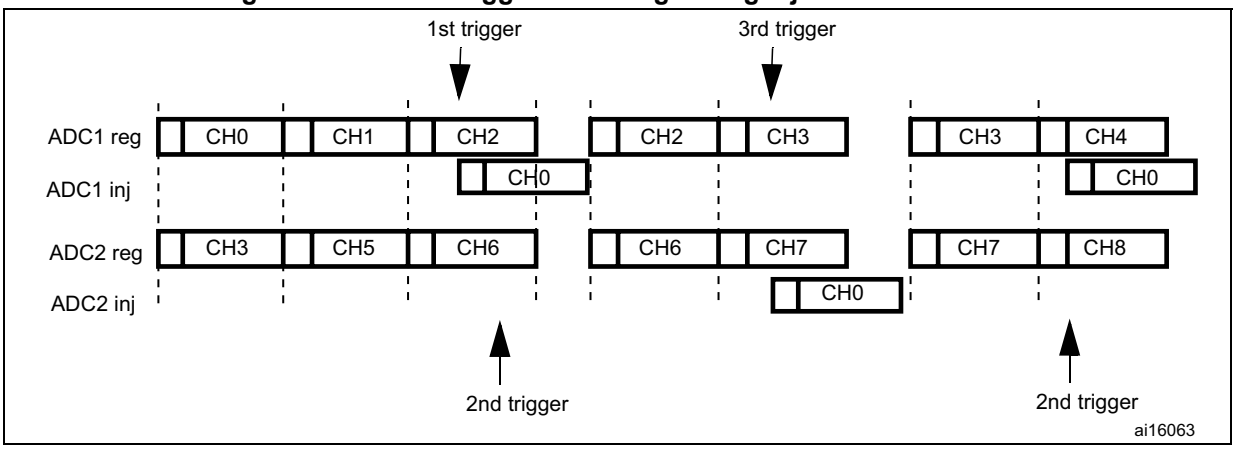

13.10 Temperature sensor

The temperature sensor can be used to measure the ambient temperature (T_A) of the device.

- On STM32F40x and STM32F41x devices, the temperature sensor is internally connected to ADC1_IN16 channel which is used to convert the sensor output voltage to a digital value.
- On STM32F42x and STM32F43x devices, the temperature sensor is internally connected to the same input channel, ADC1_IN18, as VBAT: ADC1_IN18 is used to convert the sensor output voltage or VBAT into a digital value. Only one conversion, temperature sensor or VBAT, must be selected at a time. When the temperature sensor and the VBAT conversion are set simultaneously, only the VBAT conversion is performed.

Figure 63 shows the block diagram of the temperature sensor.

When not in use, the sensor can be put in power down mode.

Note: The TSVREFE bit must be set to enable the conversion of both internal channels: the ADC1_IN16 or ADC1_IN18 (temperature sensor) and the ADC1_IN17 (VREFINT).

Main features

- Supported temperature range: –40 to 125 °C
- Precision: ±1.5 °C

Figure 63. Temperature sensor and V_{REFINT} channel block diagram

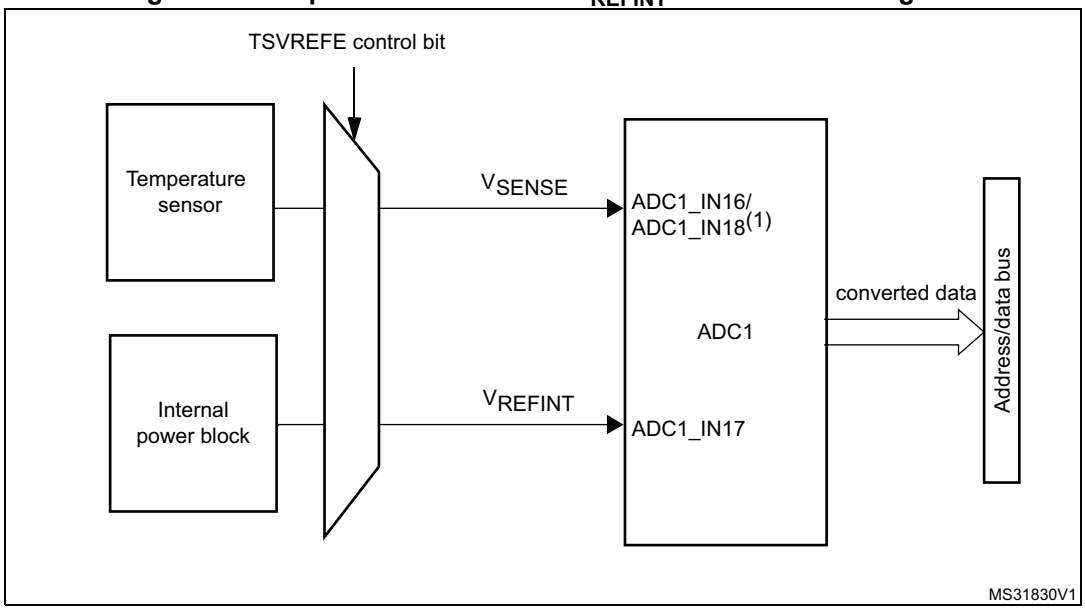

1. V_{SENSE} is input to ADC1_IN16 for the STM23F40x and STM32F41x devices and to ADC1_IN18 for the STM32F42x and STM32F43x devices.

Reading the temperature

To use the sensor:

3. Select ADC1_IN16 or ADC1_IN18 input channel.
4. Select a sampling time greater than the minimum sampling time specified in the datasheet.
5. Set the TSVREFE bit in the ADC_CCR register to wake up the temperature sensor from power down mode
6. Start the ADC conversion by setting the SWSTART bit (or by external trigger)
7. Read the resulting V_{SENSE} data in the ADC data register
8. Calculate the temperature using the following formula:

   Temperature (in °C) = $\{(V_{SENSE} – V_{25}) / Avg_Slope\} + 25$

   Where:

   – $V_{25} = V_{SENSE}$ value for 25° C
   – Avg_Slope = average slope of the temperature vs. V_{SENSE} curve (given in mV/°C or µV/°C)

   Refer to the datasheet's electrical characteristics section for the actual values of V_{25} and Avg_Slope.

Note: The sensor has a startup time after waking from power down mode before it can output V_{SENSE} at the correct level. The ADC also has a startup time after power-on, so to minimize the delay, the ADON and TSVREFE bits should be set at the same time.

The temperature sensor output voltage changes linearly with temperature. The offset of this linear function depends on each chip due to process variation (up to 45 °C from one chip to another).

The internal temperature sensor is more suited for applications that detect temperature variations instead of absolute temperatures. If accurate temperature reading is required, an external temperature sensor should be used.

13.11 Battery charge monitoring

The VBATE bit in the ADC_CCR register is used to switch to the battery voltage. As the V_{BAT} voltage could be higher than V_{DDA}, to ensure the correct operation of the ADC, the V_{BAT} pin is internally connected to a bridge divider.

When the VBATE is set, the bridge is automatically enabled to connect:

- VBAT/2 to the ADC1_IN18 input channel, on STM32F40xx and STM32F41xx devices
- VBAT/4 to the ADC1_IN18 input channel, on STM32F42xx and STM32F43xx devices

Note: On STM32F42xx and STM32F43xx devices, VBAT and temperature sensor are connected to the same ADC internal channel (ADC1_IN18). Only one conversion, either temperature sensor or VBAT, must be selected at a time. When both conversion are enabled simultaneously, only the VBAT conversion is performed.

13.12 ADC interrupts

An interrupt can be produced on the end of conversion for regular and injected groups, when the analog watchdog status bit is set and when the overrun status bit is set. Separate interrupt enable bits are available for flexibility.

Two other flags are present in the ADC_SR register, but there is no interrupt associated with them:

- JSTRT (Start of conversion for channels of an injected group)
- STRT (Start of conversion for channels of a regular group)

Table 70. ADC interrupts

Interrupt event	Event flag	Enable control bit
End of conversion of a regular group	EOC	EOCIE
End of conversion of an injected group	JEOC	JEOCIE
Analog watchdog status bit is set	AWD	AWDIE
Overrun	OVR	OVRIE

13.13 ADC registers

Refer to *Section 1.1: List of abbreviations for registers* for registers for a list of abbreviations used in register descriptions.

The peripheral registers must be written at word level (32 bits). Read accesses can be done by bytes (8 bits), half-words (16 bits) or words (32 bits).

13.13.1 ADC status register (ADC_SR)

Address offset: 0x00

Reset value: 0x0000 0000

31	30	29	28	27	26	25	24	23	22	21	20	19	18	17	16
Reserved															
15	14	13	12	11	10	9	8	7	6	5	4	3	2	1	0
Reserved										OVR	STRT	JSTRT	JEOC	EOC	AWD
										rc_w0	rc_w0	rc_w0	rc_w0	rc_w0	rc_w0

Bits 31:6 Reserved, must be kept at reset value.

Bit 5 **OVR:** Overrun

This bit is set by hardware when data are lost (either in single mode or in dual/triple mode). It is cleared by software. Overrun detection is enabled only when DMA = 1 or EOCS = 1.

0: No overrun occurred

1: Overrun has occurred

Bit 4 **STRT:** Regular channel start flag

This bit is set by hardware when regular channel conversion starts. It is cleared by software.

0: No regular channel conversion started

1: Regular channel conversion has started

Bit 3 **JSTRT:** Injected channel start flag

This bit is set by hardware when injected group conversion starts. It is cleared by software.

0: No injected group conversion started

1: Injected group conversion has started

Bit 2 **JEOC:** Injected channel end of conversion

This bit is set by hardware at the end of the conversion of all injected channels in the group. It is cleared by software.

0: Conversion is not complete

1: Conversion complete

Bit 1 **EOC:** Regular channel end of conversion

This bit is set by hardware at the end of the conversion of a regular group of channels. It is cleared by software or by reading the ADC_DR register.

0: Conversion not complete (EOCS=0), or sequence of conversions not complete (EOCS=1)

1: Conversion complete (EOCS=0), or sequence of conversions complete (EOCS=1)

Bit 0 **AWD:** Analog watchdog flag

This bit is set by hardware when the converted voltage crosses the values programmed in the ADC_LTR and ADC_HTR registers. It is cleared by software.

0: No analog watchdog event occurred

1: Analog watchdog event occurred

13.13.2 ADC control register 1 (ADC_CR1)

Address offset: 0x04

Reset value: 0x0000 0000

31	30	29	28	27	26	25	24	23	22	21	20	19	18	17	16
Reserved					OVRIE	RES		AWDEN	JAWDEN	Reserved					
					rw	rw	rw	rw	rw						

15	14	13	12	11	10	9	8	7	6	5	4	3	2	1	0
DISCNUM[2:0]			JDISCEN	DISCEN	JAUTO	AWDSGL	SCAN	JEOCIE	AWDIE	EOCIE	AWDCH[4:0]				
rw	rw	rw	rw	rw	rw	rw	rw	rw	rw	rw	rw	rw	rw	rw	rw

Bits 31:27 Reserved, must be kept at reset value.

Bit 26 **OVRIE:** Overrun interrupt enable

This bit is set and cleared by software to enable/disable the Overrun interrupt.
0: Overrun interrupt disabled
1: Overrun interrupt enabled. An interrupt is generated when the OVR bit is set.

Bits 25:24 **RES[1:0]:** Resolution

These bits are written by software to select the resolution of the conversion.
00: 12-bit (15 ADCCLK cycles)
01: 10-bit (13 ADCCLK cycles)
10: 8-bit (11 ADCCLK cycles)
11: 6-bit (9 ADCCLK cycles)

Bit 23 **AWDEN:** Analog watchdog enable on regular channels

This bit is set and cleared by software.
0: Analog watchdog disabled on regular channels
1: Analog watchdog enabled on regular channels

Bit 22 **JAWDEN:** Analog watchdog enable on injected channels

This bit is set and cleared by software.
0: Analog watchdog disabled on injected channels
1: Analog watchdog enabled on injected channels

Bits 21:16 Reserved, must be kept at reset value.

Bits 15:13 **DISCNUM[2:0]:** Discontinuous mode channel count

These bits are written by software to define the number of regular channels to be converted in discontinuous mode, after receiving an external trigger.
000: 1 channel
001: 2 channels
...
111: 8 channels

Bit 12 **JDISCEN:** Discontinuous mode on injected channels

This bit is set and cleared by software to enable/disable discontinuous mode on the injected channels of a group.
0: Discontinuous mode on injected channels disabled
1: Discontinuous mode on injected channels enabled

Bit 11 **DISCEN:** Discontinuous mode on regular channels

This bit is set and cleared by software to enable/disable Discontinuous mode on regular channels.

0: Discontinuous mode on regular channels disabled
1: Discontinuous mode on regular channels enabled

Bit 10 **JAUTO:** Automatic injected group conversion

This bit is set and cleared by software to enable/disable automatic injected group conversion after regular group conversion.

0: Automatic injected group conversion disabled
1: Automatic injected group conversion enabled

Bit 9 **AWDSGL:** Enable the watchdog on a single channel in scan mode

This bit is set and cleared by software to enable/disable the analog watchdog on the channel identified by the AWDCH[4:0] bits.

0: Analog watchdog enabled on all channels
1: Analog watchdog enabled on a single channel

Bit 8 **SCAN:** Scan mode

This bit is set and cleared by software to enable/disable the Scan mode. In Scan mode, the inputs selected through the ADC_SQRx or ADC_JSQRx registers are converted.

0: Scan mode disabled
1: Scan mode enabled

Note: An EOC interrupt is generated if the EOCIE bit is set:

- *At the end of each regular group sequence if the EOCS bit is cleared to 0*
- *At the end of each regular channel conversion if the EOCS bit is set to 1*

Note: A JEOC interrupt is generated only on the end of conversion of the last channel if the JEOCIE bit is set.

Bit 7 **JEOCIE:** Interrupt enable for injected channels

This bit is set and cleared by software to enable/disable the end of conversion interrupt for injected channels.

0: JEOC interrupt disabled
1: JEOC interrupt enabled. An interrupt is generated when the JEOC bit is set.

Bit 6 **AWDIE:** Analog watchdog interrupt enable

This bit is set and cleared by software to enable/disable the analog watchdog interrupt.

0: Analog watchdog interrupt disabled
1: Analog watchdog interrupt enabled

Bit 5 **EOCIE:** Interrupt enable for EOC

This bit is set and cleared by software to enable/disable the end of conversion interrupt.

0: EOC interrupt disabled
1: EOC interrupt enabled. An interrupt is generated when the EOC bit is set.

Bits 4:0 **AWDCH[4:0]:** Analog watchdog channel select bits

These bits are set and cleared by software. They select the input channel to be guarded by the analog watchdog.

Note: 00000: ADC analog input Channel0
00001: ADC analog input Channel1
...
01111: ADC analog input Channel15
10000: ADC analog input Channel16
10001: ADC analog input Channel17
10010: ADC analog input Channel18
Other values reserved

13.13.3 ADC control register 2 (ADC_CR2)

Address offset: 0x08

Reset value: 0x0000 0000

31	30	29	28	27	26	25	24	23	22	21	20	19	18	17	16
reserved	SWSTART	EXTEN		EXTSEL[3:0]				reserved	JSWSTART	JEXTEN		JEXTSEL[3:0]			
	rw	rw	rw	rw	rw	rw	rw		rw	rw	rw	rw	rw	rw	rw

15	14	13	12	11	10	9	8	7	6	5	4	3	2	1	0
reserved				ALIGN	EOCS	DDS	DMA	Reserved						CONT	ADON
				rw	rw	rw	rw							rw	rw

Bit 31 Reserved, must be kept at reset value.

Bit 30 **SWSTART:** Start conversion of regular channels

This bit is set by software to start conversion and cleared by hardware as soon as the conversion starts.

0: Reset state

1: Starts conversion of regular channels

Note: This bit can be set only when ADON = 1 otherwise no conversion is launched.

Bits 29:28 **EXTEN:** External trigger enable for regular channels

These bits are set and cleared by software to select the external trigger polarity and enable the trigger of a regular group.

00: Trigger detection disabled

01: Trigger detection on the rising edge

10: Trigger detection on the falling edge

11: Trigger detection on both the rising and falling edges

Bits 27:24 **EXTSEL[3:0]:** External event select for regular group

These bits select the external event used to trigger the start of conversion of a regular group:

0000: Timer 1 CC1 event

0001: Timer 1 CC2 event

0010: Timer 1 CC3 event

0011: Timer 2 CC2 event

0100: Timer 2 CC3 event

0101: Timer 2 CC4 event

0110: Timer 2 TRGO event

0111: Timer 3 CC1 event

1000: Timer 3 TRGO event

1001: Timer 4 CC4 event

1010: Timer 5 CC1 event

1011: Timer 5 CC2 event

1100: Timer 5 CC3 event

1101: Timer 8 CC1 event

1110: Timer 8 TRGO event

1111: EXTI line11

Bit 23 Reserved, must be kept at reset value.

Bit 22 **JSWSTART:** Start conversion of injected channels

This bit is set by software and cleared by hardware as soon as the conversion starts.
0: Reset state
1: Starts conversion of injected channels

Note: This bit can be set only when ADON = 1 otherwise no conversion is launched.

Bits 21:20 **JEXTEN:** External trigger enable for injected channels

These bits are set and cleared by software to select the external trigger polarity and enable the trigger of an injected group.
00: Trigger detection disabled
01: Trigger detection on the rising edge
10: Trigger detection on the falling edge
11: Trigger detection on both the rising and falling edges

Bits 19:16 **JEXTSEL[3:0]:** External event select for injected group

These bits select the external event used to trigger the start of conversion of an injected group.
0000: Timer 1 CC4 event
0001: Timer 1 TRGO event
0010: Timer 2 CC1 event
0011: Timer 2 TRGO event
0100: Timer 3 CC2 event
0101: Timer 3 CC4 event
0110: Timer 4 CC1 event
0111: Timer 4 CC2 event
1000: Timer 4 CC3 event
1001: Timer 4 TRGO event
1010: Timer 5 CC4 event
1011: Timer 5 TRGO event
1100: Timer 8 CC2 event
1101: Timer 8 CC3 event
1110: Timer 8 CC4 event
1111: EXTI line15

Bits 15:12 Reserved, must be kept at reset value.

Bit 11 **ALIGN:** Data alignment

This bit is set and cleared by software. Refer to *Figure 48* and *Figure 49*.
0: Right alignment
1: Left alignment

Bit 10 **EOCS:** End of conversion selection

This bit is set and cleared by software.
0: The EOC bit is set at the end of each sequence of regular conversions. Overrun detection is enabled only if DMA=1.
1: The EOC bit is set at the end of each regular conversion. Overrun detection is enabled.

Bit 9 **DDS:** DMA disable selection (for single ADC mode)

This bit is set and cleared by software.
0: No new DMA request is issued after the last transfer (as configured in the DMA controller)
1: DMA requests are issued as long as data are converted and DMA=1

Bit 8 **DMA:** Direct memory access mode (for single ADC mode)

This bit is set and cleared by software. Refer to the DMA controller chapter for more details.
0: DMA mode disabled
1: DMA mode enabled

Bits 7:2 Reserved, must be kept at reset value.

Bit 1 **CONT:** Continuous conversion

This bit is set and cleared by software. If it is set, conversion takes place continuously until it is cleared.

0: Single conversion mode
1: Continuous conversion mode

Bit 0 **ADON:** A/D Converter ON / OFF

This bit is set and cleared by software.

Note: 0: Disable ADC conversion and go to power down mode
1: Enable ADC

13.13.4 ADC sample time register 1 (ADC_SMPR1)

Address offset: 0x0C

Reset value: 0x0000 0000

31	30	29	28	27	26	25	24	23	22	21	20	19	18	17	16
Reserved					SMP18[2:0]			SMP17[2:0]			SMP16[2:0]			SMP15[2:1]	
					rw	rw	rw	rw	rw	rw	rw	rw	rw	rw	rw

15	14	13	12	11	10	9	8	7	6	5	4	3	2	1	0
SMP15_0	SMP14[2:0]			SMP13[2:0]			SMP12[2:0]			SMP11[2:0]			SMP10[2:0]		
rw	rw	rw	rw	rw	rw	rw	rw	rw	rw	rw	rw	rw	rw	rw	rw

Bits 31: 27 Reserved, must be kept at reset value.

Bits 26:0 **SMPx[2:0]:** Channel x sampling time selection

These bits are written by software to select the sampling time individually for each channel. During sampling cycles, the channel selection bits must remain unchanged.

Note: 000: 3 cycles
001: 15 cycles
010: 28 cycles
011: 56 cycles
100: 84 cycles
101: 112 cycles
110: 144 cycles
111: 480 cycles

13.13.5 ADC sample time register 2 (ADC_SMPR2)

Address offset: 0x10

Reset value: 0x0000 0000

31	30	29	28	27	26	25	24	23	22	21	20	19	18	17	16
Reserved		SMP9[2:0]			SMP8[2:0]			SMP7[2:0]			SMP6[2:0]			SMP5[2:1]	
		rw	rw	rw	rw	rw	rw	rw	rw	rw	rw	rw	rw	rw	rw

15	14	13	12	11	10	9	8	7	6	5	4	3	2	1	0
SMP 5_0	SMP4[2:0]			SMP3[2:0]			SMP2[2:0]			SMP1[2:0]			SMP0[2:0]		
rw	rw	rw	rw	rw	rw	rw	rw	rw	rw	rw	rw	rw	rw	rw	rw

Bits 31:30 Reserved, must be kept at reset value.

Bits 29:0 **SMPx[2:0]:** Channel x sampling time selection

These bits are written by software to select the sampling time individually for each channel. During sample cycles, the channel selection bits must remain unchanged.

Note: 000: 3 cycles
001: 15 cycles
010: 28 cycles
011: 56 cycles
100: 84 cycles
101: 112 cycles
110: 144 cycles
111: 480 cycles

13.13.6 ADC injected channel data offset register x (ADC_JOFRx) (x=1..4)

Address offset: 0x14-0x20

Reset value: 0x0000 0000

31	30	29	28	27	26	25	24	23	22	21	20	19	18	17	16
Reserved															
15	14	13	12	11	10	9	8	7	6	5	4	3	2	1	0
Reserved				JOFFSETx[11:0]											
				rw	rw	rw	rw	rw	rw	rw	rw	rw	rw	rw	rw

Bits 31:12 Reserved, must be kept at reset value.

Bits 11:0 **JOFFSETx[11:0]:** Data offset for injected channel x

These bits are written by software to define the offset to be subtracted from the raw converted data when converting injected channels. The conversion result can be read from in the ADC_JDRx registers.

13.13.7 ADC watchdog higher threshold register (ADC_HTR)

Address offset: 0x24

Reset value: 0x0000 0FFF

31	30	29	28	27	26	25	24	23	22	21	20	19	18	17	16
Reserved															
15	14	13	12	11	10	9	8	7	6	5	4	3	2	1	0
Reserved				HT[11:0]											
				rw	rw	rw	rw	rw	rw	rw	rw	rw	rw	rw	rw

Bits 31:12 Reserved, must be kept at reset value.

Bits 11:0 **HT[11:0]:** Analog watchdog higher threshold

These bits are written by software to define the higher threshold for the analog watchdog.

Note: The software can write to these registers when an ADC conversion is ongoing. The programmed value will be effective when the next conversion is complete. Writing to this register is performed with a write delay that can create uncertainty on the effective time at which the new value is programmed.

13.13.8 ADC watchdog lower threshold register (ADC_LTR)

Address offset: 0x28

Reset value: 0x0000 0000

31	30	29	28	27	26	25	24	23	22	21	20	19	18	17	16
Reserved															
15	14	13	12	11	10	9	8	7	6	5	4	3	2	1	0
Reserved				LT[11:0]											
				rw	rw	rw	rw	rw	rw	rw	rw	rw	rw	rw	rw

Bits 31:12 Reserved, must be kept at reset value.

Bits 11:0 **LT[11:0]:** Analog watchdog lower threshold

These bits are written by software to define the lower threshold for the analog watchdog.

Note: The software can write to these registers when an ADC conversion is ongoing. The programmed value will be effective when the next conversion is complete. Writing to this register is performed with a write delay that can create uncertainty on the effective time at which the new value is programmed.

13.13.9 ADC regular sequence register 1 (ADC_SQR1)

Address offset: 0x2C

Reset value: 0x0000 0000

31	30	29	28	27	26	25	24	23	22	21	20	19	18	17	16
Reserved								L[3:0]				SQ16[4:1]			
								rw	rw	rw	rw	rw	rw	rw	rw
15	14	13	12	11	10	9	8	7	6	5	4	3	2	1	0
SQ16_0	SQ15[4:0]					SQ14[4:0]					SQ13[4:0]				
rw	rw	rw	rw	rw	rw	rw	rw				rw	rw	rw	rw	rw

Bits 31:24 Reserved, must be kept at reset value.

Bits 23:20 **L[3:0]:** Regular channel sequence length

These bits are written by software to define the total number of conversions in the regular channel conversion sequence.
0000: 1 conversion
0001: 2 conversions
...
1111: 16 conversions

Bits 19:15 **SQ16[4:0]:** 16th conversion in regular sequence

These bits are written by software with the channel number (0..18) assigned as the 16th in the conversion sequence.

Bits 14:10 **SQ15[4:0]:** 15th conversion in regular sequence

Bits 9:5 **SQ14[4:0]:** 14th conversion in regular sequence

Bits 4:0 **SQ13[4:0]:** 13th conversion in regular sequence

13.13.10 ADC regular sequence register 2 (ADC_SQR2)

Address offset: 0x30

Reset value: 0x0000 0000

31	30	29	28	27	26	25	24	23	22	21	20	19	18	17	16
Reserved		SQ12[4:0]					SQ11[4:0]					SQ10[4:1]			
		rw	rw	rw	rw	rw	rw	rw	rw	rw	rw	rw	rw	rw	rw

15	14	13	12	11	10	9	8	7	6	5	4	3	2	1	0
SQ10_0	SQ9[4:0]					SQ8[4:0]					SQ7[4:0]				
rw	rw	rw	rw	rw	rw	rw	rw	rw	rw	rw	rw	rw	rw	rw	rw

Bits 31:30 Reserved, must be kept at reset value.

Bits 29:26 **SQ12[4:0]:** 12th conversion in regular sequence

These bits are written by software with the channel number (0..18) assigned as the 12th in the sequence to be converted.

Bits 24:20 **SQ11[4:0]:** 11th conversion in regular sequence

Bits 19:15 **SQ10[4:0]:** 10th conversion in regular sequence

Bits 14:10 **SQ9[4:0]:** 9th conversion in regular sequence

Bits 9:5 **SQ8[4:0]:** 8th conversion in regular sequence

Bits 4:0 **SQ7[4:0]:** 7th conversion in regular sequence

13.13.11 ADC regular sequence register 3 (ADC_SQR3)

Address offset: 0x34

Reset value: 0x0000 0000

31	30	29	28	27	26	25	24	23	22	21	20	19	18	17	16
Reserved		SQ6[4:0]					SQ5[4:0]					SQ4[4:1]			
		rw	rw	rw	rw	rw	rw	rw	rw	rw	rw	rw	rw	rw	rw

15	14	13	12	11	10	9	8	7	6	5	4	3	2	1	0
SQ4_0	SQ3[4:0]					SQ2[4:0]					SQ1[4:0]				
rw	rw	rw	rw	rw	rw	rw	rw	rw	rw	rw	rw	rw	rw	rw	rw

Bits 31:30 Reserved, must be kept at reset value.

Bits 29:25 **SQ6[4:0]:** 6th conversion in regular sequence

These bits are written by software with the channel number (0..18) assigned as the 6th in the sequence to be converted.

Bits 24:20 **SQ5[4:0]:** 5th conversion in regular sequence

Bits 19:15 **SQ4[4:0]:** 4th conversion in regular sequence

Bits 14:10 **SQ3[4:0]:** 3rd conversion in regular sequence

Bits 9:5 **SQ2[4:0]:** 2nd conversion in regular sequence

Bits 4:0 **SQ1[4:0]:** 1st conversion in regular sequence

13.13.12 ADC injected sequence register (ADC_JSQR)

Address offset: 0x38

Reset value: 0x0000 0000

31	30	29	28	27	26	25	24	23	22	21	20	19	18	17	16
Reserved										JL[1:0]		JSQ4[4:1]			
										rw	rw	rw	rw	rw	rw

15	14	13	12	11	10	9	8	7	6	5	4	3	2	1	0
JSQ4[0]	JSQ3[4:0]					JSQ2[4:0]					JSQ1[4:0]				
rw	rw	rw	rw	rw	rw	rw	rw	rw	rw	rw	rw	rw	rw	rw	rw

Bits 31:22 Reserved, must be kept at reset value.

Bits 21:20 **JL[1:0]:** Injected sequence length

These bits are written by software to define the total number of conversions in the injected channel conversion sequence.

00: 1 conversion
01: 2 conversions
10: 3 conversions
11: 4 conversions

Bits 19:15 **JSQ4[4:0]:** 4th conversion in injected sequence (when JL[1:0]=3, see note below)

These bits are written by software with the channel number (0..18) assigned as the 4th in the sequence to be converted.

Bits 14:10 **JSQ3[4:0]:** 3rd conversion in injected sequence (when JL[1:0]=3, see note below)

Bits 9:5 **JSQ2[4:0]:** 2nd conversion in injected sequence (when JL[1:0]=3, see note below)

Bits 4:0 **JSQ1[4:0]:** 1st conversion in injected sequence (when JL[1:0]=3, see note below)

Note: When JL[1:0]=3 (4 injected conversions in the sequencer), the ADC converts the channels in the following order: JSQ1[4:0], JSQ2[4:0], JSQ3[4:0], and JSQ4[4:0].

When JL=2 (3 injected conversions in the sequencer), the ADC converts the channels in the following order: JSQ2[4:0], JSQ3[4:0], and JSQ4[4:0].

When JL=1 (2 injected conversions in the sequencer), the ADC converts the channels in starting from JSQ3[4:0], and then JSQ4[4:0].

When JL=0 (1 injected conversion in the sequencer), the ADC converts only JSQ4[4:0] channel.

13.13.13 ADC injected data register x (ADC_JDRx) (x= 1..4)

Address offset: 0x3C - 0x48

Reset value: 0x0000 0000

31	30	29	28	27	26	25	24	23	22	21	20	19	18	17	16
Reserved															
15	14	13	12	11	10	9	8	7	6	5	4	3	2	1	0
JDATA[15:0]															
r	r	r	r	r	r	r	r	r	r	r	r	r	r	r	r

Bits 31:16 Reserved, must be kept at reset value.

Bits 15:0 **JDATA[15:0]:** Injected data

These bits are read-only. They contain the conversion result from injected channel x. The data are left -or right-aligned as shown in *Figure 48* and *Figure 49*.

13.13.14 ADC regular data register (ADC_DR)

Address offset: 0x4C

Reset value: 0x0000 0000

31	30	29	28	27	26	25	24	23	22	21	20	19	18	17	16
Reserved															
15	14	13	12	11	10	9	8	7	6	5	4	3	2	1	0
DATA[15:0]															
r	r	r	r	r	r	r	r	r	r	r	r	r	r	r	r

Bits 31:16 Reserved, must be kept at reset value.

Bits 15:0 **DATA[15:0]:** Regular data

These bits are read-only. They contain the conversion result from the regular channels. The data are left- or right-aligned as shown in *Figure 48* and *Figure 49*.

13.13.15 ADC Common status register (ADC_CSR)

Address offset: 0x00 (this offset address is relative to ADC1 base address + 0x300)

Reset value: 0x0000 0000

This register provides an image of the status bits of the different ADCs. Nevertheless it is read-only and does not allow to clear the different status bits. Instead each status bit must be cleared by writing it to 0 in the corresponding ADC_SR register.

31	30	29	28	27	26	25	24	23	22	21	20	19	18	17	16
Reserved										OVR3	STRT3	JSTRT3	JEOC 3	EOC3	AWD3
										ADC3					
										r	r	r	r	r	r

15	14	13	12	11	10	9	8	7	6	5	4	3	2	1	0
Reserved		OVR2	STRT2	JSTRT 2	JEOC2	EOC2	AWD2	Reserved		OVR1	STRT1	JSTRT1	JEOC 1	EOC1	AWD1
		ADC2								ADC1					
		r	r	r	r	r	r			r	r	r	r	r	r

Bits 31:22 Reserved, must be kept at reset value.

Bit 21 **OVR3:** Overrun flag of ADC3
This bit is a copy of the OVR bit in the ADC3_SR register.

Bit 20 **STRT3:** Regular channel Start flag of ADC3
This bit is a copy of the STRT bit in the ADC3_SR register.

Bit 19 **JSTRT3:** Injected channel Start flag of ADC3
This bit is a copy of the JSTRT bit in the ADC3_SR register.

Bit 18 **JEOC3:** Injected channel end of conversion of ADC3
This bit is a copy of the JEOC bit in the ADC3_SR register.

Bit 17 **EOC3:** End of conversion of ADC3
This bit is a copy of the EOC bit in the ADC3_SR register.

Bit 16 **AWD3:** Analog watchdog flag of ADC3
This bit is a copy of the AWD bit in the ADC3_SR register.

Bits 15:14 Reserved, must be kept at reset value.

Bit 13 **OVR2:** Overrun flag of ADC2
This bit is a copy of the OVR bit in the ADC2_SR register.

Bit 12 **STRT2:** Regular channel Start flag of ADC2
This bit is a copy of the STRT bit in the ADC2_SR register.

Bit 11 **JSTRT2:** Injected channel Start flag of ADC2
This bit is a copy of the JSTRT bit in the ADC2_SR register.

Bit 10 **JEOC2:** Injected channel end of conversion of ADC2
This bit is a copy of the JEOC bit in the ADC2_SR register.

Bit 9 **EOC2:** End of conversion of ADC2
This bit is a copy of the EOC bit in the ADC2_SR register.

Bit 8 **AWD2:** Analog watchdog flag of ADC2
This bit is a copy of the AWD bit in the ADC2_SR register.

Bits 7:6 Reserved, must be kept at reset value.

Bit 5 **OVR1:** Overrun flag of ADC1
This bit is a copy of the OVR bit in the ADC1_SR register.

Bit 4 **STRT1:** Regular channel Start flag of ADC1
This bit is a copy of the STRT bit in the ADC1_SR register.

Bit 3 **JSTRT1:** Injected channel Start flag of ADC1
This bit is a copy of the JSTRT bit in the ADC1_SR register.

Bit 2 **JEOC1:** Injected channel end of conversion of ADC1
This bit is a copy of the JEOC bit in the ADC1_SR register.

Bit 1 **EOC1:** End of conversion of ADC1
This bit is a copy of the EOC bit in the ADC1_SR register.

Bit 0 **AWD1:** Analog watchdog flag of ADC1
This bit is a copy of the AWD bit in the ADC1_SR register.

13.13.16 ADC common control register (ADC_CCR)

Address offset: 0x04 (this offset address is relative to ADC1 base address + 0x300)

Reset value: 0x0000 0000

31	30	29	28	27	26	25	24	23	22	21	20	19	18	17	16
Reserved								TSVREFE	VBATE	Reserved				ADCPRE	
								rw	rw					rw	rw

15	14	13	12	11	10	9	8	7	6	5	4	3	2	1	0
DMA[1:0]		DDS	Res.	DELAY[3:0]				Reserved			MULTI[4:0]				
rw	rw	rw		rw	rw	rw	rw				rw	rw	rw	rw	rw

Bits 31:24 Reserved, must be kept at reset value.

Bit 23 **TSVREFE:** Temperature sensor and V_{REFINT} enable
This bit is set and cleared by software to enable/disable the temperature sensor and the V_{REFINT} channel.
0: Temperature sensor and V_{REFINT} channel disabled
1: Temperature sensor and V_{REFINT} channel enabled

Note: On STM32F42x and STM32F43x devices, VBATE must be disabled when TSVREFE is set. If both bits are set, only the VBAT conversion is performed.

Bit 22 **VBATE:** V_{BAT} enable
This bit is set and cleared by software to enable/disable the V_{BAT} channel.
0: V_{BAT} channel disabled
1: V_{BAT} channel enabled

Bits 21:18 Reserved, must be kept at reset value.

Bits 17:16 **ADCPRE:** ADC prescaler

Set and cleared by software to select the frequency of the clock to the ADC. The clock is common for all the ADCs.

Note: 00: PCLK2 divided by 2
01: PCLK2 divided by 4
10: PCLK2 divided by 6
11: PCLK2 divided by 8

Bits 15:14 **DMA:** Direct memory access mode for multi ADC mode

This bit-field is set and cleared by software. Refer to the DMA controller section for more details.

00: DMA mode disabled
01: DMA mode 1 enabled (2 / 3 half-words one by one - 1 then 2 then 3)
10: DMA mode 2 enabled (2 / 3 half-words by pairs - 2&1 then 1&3 then 3&2)
11: DMA mode 3 enabled (2 / 3 bytes by pairs - 2&1 then 1&3 then 3&2)

Bit 13 **DDS:** DMA disable selection (for multi-ADC mode)

This bit is set and cleared by software.

0: No new DMA request is issued after the last transfer (as configured in the DMA controller). DMA bits are not cleared by hardware, however they must have been cleared and set to the wanted mode by software before new DMA requests can be generated.

1: DMA requests are issued as long as data are converted and DMA = 01, 10 or 11.

Bit 12 Reserved, must be kept at reset value.

Bit 11:8 **DELAY:** Delay between 2 sampling phases

Set and cleared by software. These bits are used in dual or triple interleaved modes.

0000: 5 * T_{ADCCLK}
0001: 6 * T_{ADCCLK}
0010: 7 * T_{ADCCLK}
...
1111: 20 * T_{ADCCLK}

Bits 7:5 Reserved, must be kept at reset value.

Bits 4:0 **MULTI[4:0]:** Multi ADC mode selection

These bits are written by software to select the operating mode.

– All the ADCs independent:
  00000: Independent mode
– 00001 to 01001: Dual mode, ADC1 and ADC2 working together, ADC3 is independent
  00001: Combined regular simultaneous + injected simultaneous mode
  00010: Combined regular simultaneous + alternate trigger mode
  00011: Reserved
  00101: Injected simultaneous mode only
  00110: Regular simultaneous mode only
  00111: interleaved mode only
  01001: Alternate trigger mode only
– 10001 to 11001: Triple mode: ADC1, 2 and 3 working together
  10001: Combined regular simultaneous + injected simultaneous mode
  10010: Combined regular simultaneous + alternate trigger mode
  10011: Reserved
  10101: Injected simultaneous mode only
  10110: Regular simultaneous mode only
  10111: interleaved mode only
  11001: Alternate trigger mode only
  All other combinations are reserved and must not be programmed

Note: In multi mode, a change of channel configuration generates an abort that can cause a loss of synchronization. It is recommended to disable the multi ADC mode before any configuration change.

13.13.17 ADC common regular data register for dual and triple modes (ADC_CDR)

Address offset: 0x08 (this offset address is relative to ADC1 base address + 0x300)

Reset value: 0x0000 0000

31	30	29	28	27	26	25	24	23	22	21	20	19	18	17	16
DATA2[15:0]															
r	r	r	r	r	r	r	r	r	r	r	r	r	r	r	r
15	14	13	12	11	10	9	8	7	6	5	4	3	2	1	0
DATA1[15:0]															
r	r	r	r	r	r	r	r	r	r	r	r	r	r	r	r

Bits 31:16 **DATA2[15:0]:** 2nd data item of a pair of regular conversions
- In dual mode, these bits contain the regular data of ADC2. Refer to *Dual ADC mode*.
- In triple mode, these bits contain alternatively the regular data of ADC2, ADC1 and ADC3. Refer to *Triple ADC mode*.

Bits 15:0 **DATA1[15:0]**: 1st data item of a pair of regular conversions
- In dual mode, these bits contain the regular data of ADC1. Refer to *Dual ADC mode*
- In triple mode, these bits contain alternatively the regular data of ADC1, ADC3 and ADC2. Refer to *Triple ADC mode*.

13.13.18 ADC register map

The following table summarizes the ADC registers.

Table 71. ADC global register map

Offset	Register
0x000 - 0x04C	ADC1
0x050 - 0x0FC	Reserved
0x100 - 0x14C	ADC2
0x118 - 0x1FC	Reserved
0x200 - 0x24C	ADC3
0x250 - 0x2FC	Reserved
0x300 - 0x308	Common registers

Table 72. ADC register map and reset values for each ADC

Offset	Register	31	30	29	28	27	26	25	24	23	22	21	20	19	18	17	16	15	14	13	12	11	10	9	8	7	6	5	4	3	2	1	0
0x00	**ADC_SR**	Reserved																										OVR	STRT	JSTRT	JEOC	EOC	AWD
	Reset value																											0	0	0	0	0	0
0x04	**ADC_CR1**	Reserved					OVRIE	RES[1:0]		AWDEN	JAWDEN	Reserved						DISC NUM [2:0]			JDISCEN	DISCEN	JAUTO	AWD SGL	SCAN	JEOCIE	AWDIE	EOCIE	AWDCH[4:0]				
	Reset value						0	0	0	0	0							0	0	0	0	0	0	0	0	0	0	0	0	0	0	0	0
0x08	**ADC_CR2**	Reserved	SWSTART	EXTEN[1:0]		EXTSEL [3:0]				Reserved	JSWSTART	JEXTEN[1:0]		JEXTSEL [3:0]				Reserved				ALIGN	EOCS	DDS	DMA	Reserved						CONT	ADON
	Reset value		0	0	0	0	0	0	0		0	0	0	0	0	0	0					0	0		0							0	0
0x0C	**ADC_SMPR1**	Sample time bits SMPx_x																															
	Reset value	0	0	0	0	0	0	0	0	0	0	0	0	0	0	0	0	0	0	0	0	0	0	0	0	0	0	0	0	0	0	0	0
0x10	**ADC_SMPR2**	Sample time bits SMPx_x																															
	Reset value	0	0	0	0	0	0	0	0	0	0	0	0	0	0	0	0	0	0	0	0	0	0	0	0	0	0	0	0	0	0	0	0
0x14	**ADC_JOFR1**	Reserved																				JOFFSET1[11:0]											
	Reset value																					0	0	0	0	0	0	0	0	0	0	0	0
0x18	**ADC_JOFR2**	Reserved																				JOFFSET2[11:0]											
	Reset value																					0	0	0	0	0	0	0	0	0	0	0	0
0x1C	**ADC_JOFR3**	Reserved																				JOFFSET3[11:0]											
	Reset value																					0	0	0	0	0	0	0	0	0	0	0	0
0x20	**ADC_JOFR4**	Reserved																				JOFFSET4[11:0]											
	Reset value																					0	0	0	0	0	0	0	0	0	0	0	0
0x24	**ADC_HTR**	Reserved																				HT[11:0]											
	Reset value																					1	1	1	1	1	1	1	1	1	1	1	1
0x28	**ADC_LTR**	Reserved																				LT[11:0]											
	Reset value																					0	0	0	0	0	0	0	0	0	0	0	0
0x2C	**ADC_SQR1**	Reserved								L[3:0]				Regular channel sequence SQx_x bits																			
	Reset value									0	0	0	0	0	0	0	0	0	0	0	0	0	0	0	0	0	0	0	0	0	0	0	0
0x30	**ADC_SQR2**	Reserved	Regular channel sequence SQx_x bits																														
	Reset value		0	0	0	0	0	0	0	0	0	0	0	0	0	0	0	0	0	0	0	0	0	0	0	0	0	0	0	0	0	0	0
0x34	**ADC_SQR3**	Reserved	Regular channel sequence SQx_x bits																														
	Reset value		0	0	0	0	0	0	0	0	0	0	0	0	0	0	0	0	0	0	0	0	0	0	0	0	0	0	0	0	0	0	0
0x38	**ADC_JSQR**	Reserved										JL[1:0]		Injected channel sequence JSQx_x bits																			
	Reset value											0	0	0	0	0	0	0	0	0	0	0	0	0	0	0	0	0	0	0	0	0	0
0x3C	**ADC_JDR1**	Reserved																JDATA[15:0]															
	Reset value																	0	0	0	0	0	0	0	0	0	0	0	0	0	0	0	0
0x40	**ADC_JDR2**	Reserved																JDATA[15:0]															
	Reset value																	0	0	0	0	0	0	0	0	0	0	0	0	0	0	0	0
0x44	**ADC_JDR3**	Reserved																JDATA[15:0]															
	Reset value																	0	0	0	0	0	0	0	0	0	0	0	0	0	0	0	0
0x48	**ADC_JDR4**	Reserved																JDATA[15:0]															
	Reset value																	0	0	0	0	0	0	0	0	0	0	0	0	0	0	0	0
0x4C	**ADC_DR**	Reserved																Regular DATA[15:0]															
	Reset value																	0	0	0	0	0	0	0	0	0	0	0	0	0	0	0	0

Table 73. ADC register map and reset values (common ADC registers)

Offset	Register	31	30	29	28	27	26	25	24	23	22	21	20	19	18	17	16	15	14	13	12	11	10	9	8	7	6	5	4	3	2	1	0
0x00	**ADC_CSR**	Reserved										OVR	STRT	JSTRT	JEOC	EOC	AWD	Reserved		OVR	STRT	JSTRT	JEOC	EOC	AWD	Reserved		OVR	STRT	JSTRT	JEOC	EOC	AWD
	Reset value											0	0	0	0	0	0			0	0	0	0	0	0			0	0	0	0	0	0
												ADC3								ADC2								ADC1					
0x04	**ADC_CCR**	Reserved								TSVREFE	VBATE	Reserved				ADCPRE[1:0]		DMA[1:0]		DDS	Reserved	DELAY [3:0]				Reserved		MULTI [4:0]					
	Reset value									0	0					0	0	0	0	0		0	0	0	0			0	0	0	0	0	
0x08	**ADC_CDR**	Regular DATA2[15:0]																Regular DATA1[15:0]															
	Reset value	0	0	0	0	0	0	0	0	0	0	0	0	0	0	0	0	0	0	0	0	0	0	0	0	0	0	0	0	0	0	0	0

Refer to *Section 2.3: Memory map* for the register boundary addresses.

14 Digital-to-analog converter (DAC)

This section applies to the whole STM32F4xx family, unless otherwise specified.

14.1 DAC introduction

The DAC module is a 12-bit, voltage output digital-to-analog converter. The DAC can be configured in 8- or 12-bit mode and may be used in conjunction with the DMA controller. In 12-bit mode, the data could be left- or right-aligned. The DAC has two output channels, each with its own converter. In dual DAC channel mode, conversions could be done independently or simultaneously when both channels are grouped together for synchronous update operations. An input reference pin, V_{REF+} (shared with ADC) is available for better resolution.

14.2 DAC main features

- Two DAC converters: one output channel each
- Left or right data alignment in 12-bit mode
- Synchronized update capability
- Noise-wave generation
- Triangular-wave generation
- Dual DAC channel for independent or simultaneous conversions
- DMA capability for each channel
- DMA underrun error detection
- External triggers for conversion
- Input voltage reference, V_{REF+}

Figure 64 shows the block diagram of a DAC channel and *Table 74* gives the pin description.

Figure 64. DAC channel block diagram

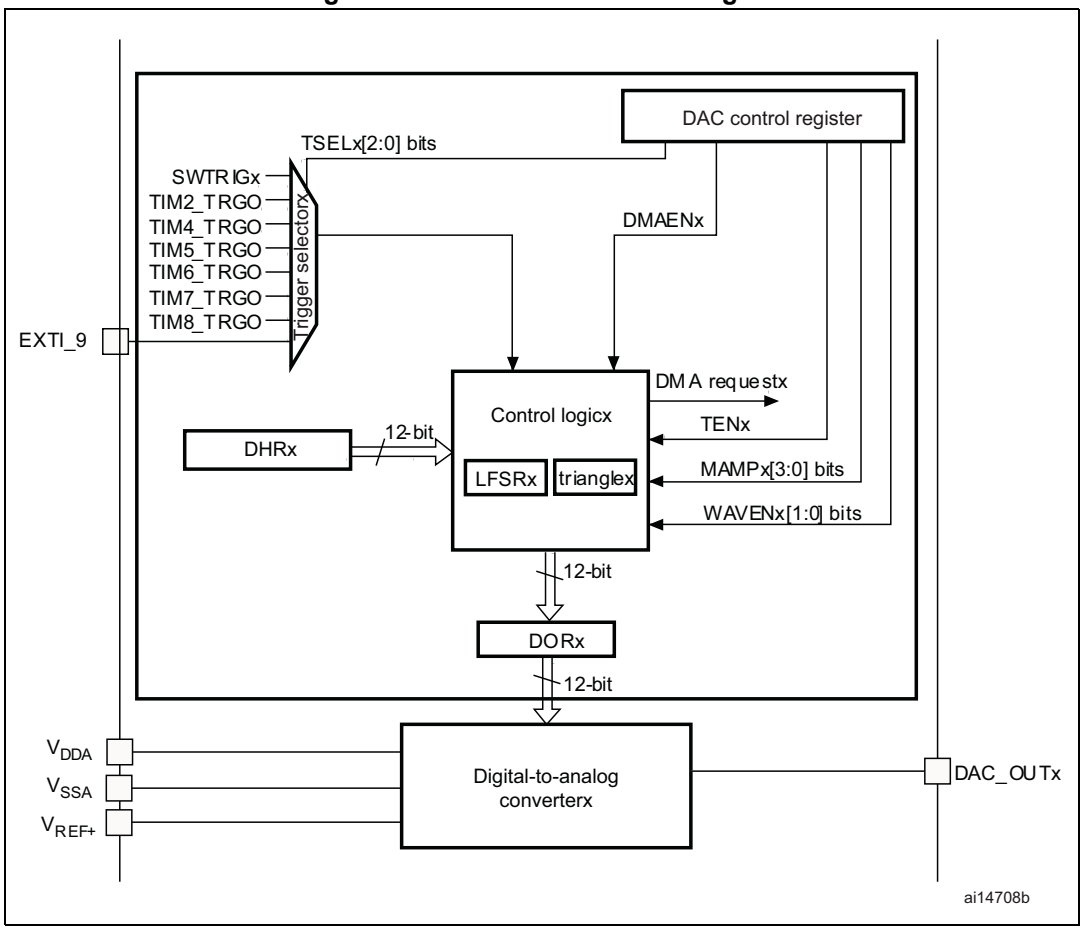

Table 74. DAC pins

Name	Signal type	Remarks
V_{REF+}	Input, analog reference positive	The higher/positive reference voltage for the DAC, 1.8 V $\leq V_{REF+} \leq V_{DDA}$
V_{DDA}	Input, analog supply	Analog power supply
V_{SSA}	Input, analog supply ground	Ground for analog power supply
DAC_OUTx	Analog output signal	DAC channelx analog output

Note: Once the DAC channelx is enabled, the corresponding GPIO pin (PA4 or PA5) is automatically connected to the analog converter output (DAC_OUTx). In order to avoid parasitic consumption, the PA4 or PA5 pin should first be configured to analog (AIN).

14.3 DAC functional description

14.3.1 DAC channel enable

Each DAC channel can be powered on by setting its corresponding ENx bit in the DAC_CR register. The DAC channel is then enabled after a startup time t_{WAKEUP}.

Note: The ENx bit enables the analog DAC Channelx macrocell only. The DAC Channelx digital interface is enabled even if the ENx bit is reset.

14.3.2 DAC output buffer enable

The DAC integrates two output buffers that can be used to reduce the output impedance, and to drive external loads directly without having to add an external operational amplifier. Each DAC channel output buffer can be enabled and disabled using the corresponding BOFFx bit in the DAC_CR register.

14.3.3 DAC data format

Depending on the selected configuration mode, the data have to be written into the specified register as described below:

- Single DAC channelx, there are three possibilities:
  - 8-bit right alignment: the software has to load data into the DAC_DHR8Rx [7:0] bits (stored into the DHRx[11:4] bits)
  - 12-bit left alignment: the software has to load data into the DAC_DHR12Lx [15:4] bits (stored into the DHRx[11:0] bits)
  - 12-bit right alignment: the software has to load data into the DAC_DHR12Rx [11:0] bits (stored into the DHRx[11:0] bits)

Depending on the loaded DAC_DHRyyyx register, the data written by the user is shifted and stored into the corresponding DHRx (data holding registerx, which are internal non-memory-mapped registers). The DHRx register is then loaded into the DORx register either automatically, by software trigger or by an external event trigger.

Figure 65. Data registers in single DAC channel mode

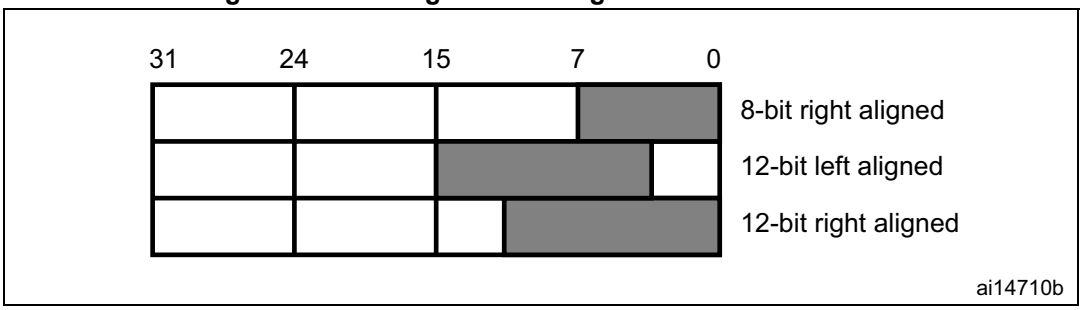

- Dual DAC channels, there are three possibilities:
  - 8-bit right alignment: data for DAC channel1 to be loaded into the DAC_DHR8RD [7:0] bits (stored into the DHR1[11:4] bits) and data for DAC channel2 to be loaded into the DAC_DHR8RD [15:8] bits (stored into the DHR2[11:4] bits)
  - 12-bit left alignment: data for DAC channel1 to be loaded into the DAC_DHR12LD [15:4] bits (stored into the DHR1[11:0] bits) and data for DAC channel2 to be loaded into the DAC_DHR12LD [31:20] bits (stored into the DHR2[11:0] bits)
  - 12-bit right alignment: data for DAC channel1 to be loaded into the DAC_DHR12RD [11:0] bits (stored into the DHR1[11:0] bits) and data for DAC channel2 to be loaded into the DAC_DHR12LD [27:16] bits (stored into the DHR2[11:0] bits)

Depending on the loaded DAC_DHRyyyD register, the data written by the user is shifted and stored into DHR1 and DHR2 (data holding registers, which are internal non-memory-mapped registers). The DHR1 and DHR2 registers are then loaded into the DOR1 and DOR2 registers, respectively, either automatically, by software trigger or by an external event trigger.

Figure 66. Data registers in dual DAC channel mode

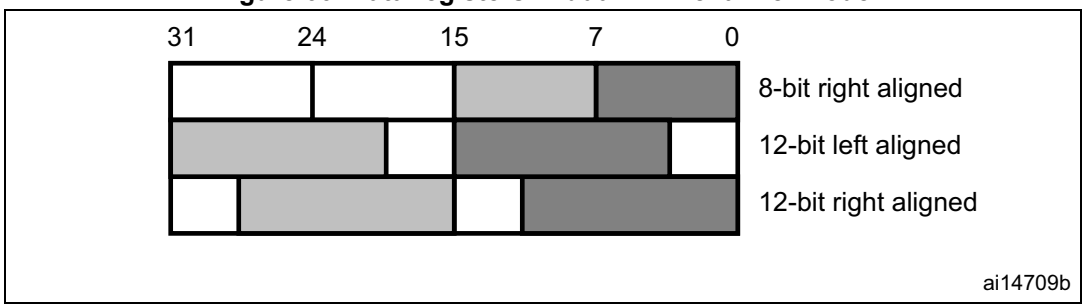

14.3.4 DAC conversion

The DAC_DORx cannot be written directly and any data transfer to the DAC channelx must be performed by loading the DAC_DHRx register (write to DAC_DHR8Rx, DAC_DHR12Lx, DAC_DHR12Rx, DAC_DHR8RD, DAC_DHR12LD or DAC_DHR12LD).

Data stored in the DAC_DHRx register are automatically transferred to the DAC_DORx register after one APB1 clock cycle, if no hardware trigger is selected (TENx bit in DAC_CR register is reset). However, when a hardware trigger is selected (TENx bit in DAC_CR register is set) and a trigger occurs, the transfer is performed three APB1 clock cycles later.

When DAC_DORx is loaded with the DAC_DHRx contents, the analog output voltage becomes available after a time $t_{SETTLING}$ that depends on the power supply voltage and the analog output load.

Figure 67. Timing diagram for conversion with trigger disabled TEN = 0

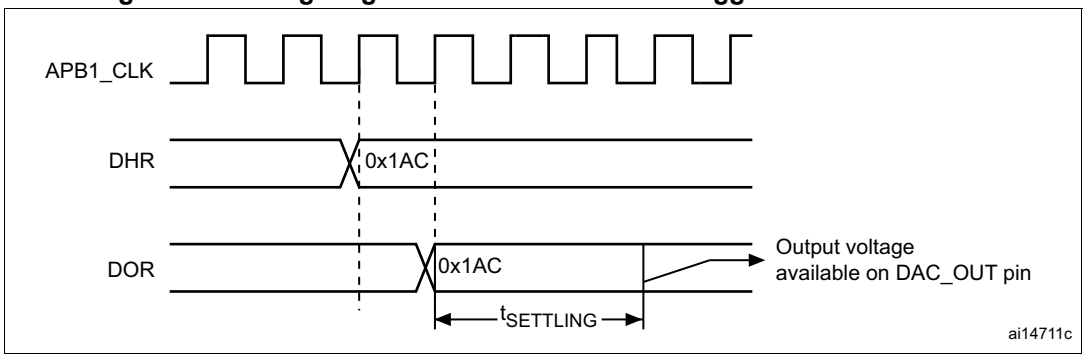

14.3.5 DAC output voltage

Digital inputs are converted to output voltages on a linear conversion between 0 and V_{REF+}.

The analog output voltages on each DAC channel pin are determined by the following equation:

$$\text{DACoutput} = V_{REF} \times \frac{DOR}{4096}$$

14.3.6 DAC trigger selection

If the TENx control bit is set, conversion can then be triggered by an external event (timer counter, external interrupt line). The TSELx[2:0] control bits determine which out of 8 possible events will trigger conversion as shown in *Table 75*.

Table 75. External triggers

Source	Type	TSEL[2:0]
Timer 6 TRGO event	Internal signal from on-chip timers	000
Timer 8 TRGO event		001
Timer 7 TRGO event		010
Timer 5 TRGO event		011
Timer 2 TRGO event		100
Timer 4 TRGO event		101
EXTI line9	External pin	110
SWTRIG	Software control bit	111

Each time a DAC interface detects a rising edge on the selected timer TRGO output, or on the selected external interrupt line 9, the last data stored into the DAC_DHRx register are transferred into the DAC_DORx register. The DAC_DORx register is updated three APB1 cycles after the trigger occurs.

If the software trigger is selected, the conversion starts once the SWTRIG bit is set. SWTRIG is reset by hardware once the DAC_DORx register has been loaded with the DAC_DHRx register contents.

Note: TSELx[2:0] bit cannot be changed when the ENx bit is set.

When software trigger is selected, the transfer from the DAC_DHRx register to the DAC_DORx register takes only one APB1 clock cycle.

14.3.7 DMA request

Each DAC channel has a DMA capability. Two DMA channels are used to service DAC channel DMA requests.

A DAC DMA request is generated when an external trigger (but not a software trigger) occurs while the DMAENx bit is set. The value of the DAC_DHRx register is then transferred into the DAC_DORx register.
In dual mode, if both DMAENx bits are set, two DMA requests are generated. If only one DMA request is needed, the user should set only the corresponding DMAENx bit. In this way, the application can manage both DAC channels in dual mode by using one DMA request and a unique DMA channel.

DMA underrun

The DAC DMA request is not queued so that if a second external trigger arrives before the acknowledgement for the first external trigger is received (first request), then no new request is issued and the DMA channelx underrun flag DMAUDRx in the DAC_SR register is set, reporting the error condition. DMA data transfers are then disabled and no further DMA request is treated. The DAC channelx continues to convert old data.

The software should clear the DMAUDRx flag by writing “1”, clear the DMAEN bit of the used DMA stream and re-initialize both DMA and DAC channelx to restart the transfer correctly. The software should modify the DAC trigger conversion frequency or lighten the DMA workload to avoid a new DMA underrun. Finally, the DAC conversion could be resumed by enabling both DMA data transfer and conversion trigger.

For each DAC channelx, an interrupt is also generated if its corresponding DMAUDRIEx bit in the DAC_CR register is enabled.

14.3.8 Noise generation

In order to generate a variable-amplitude pseudonoise, an LFSR (linear feedback shift register) is available. DAC noise generation is selected by setting WAVEx[1:0] to “01”. The preloaded value in LFSR is 0xAAA. This register is updated three APB1 clock cycles after each trigger event, following a specific calculation algorithm.

Figure 68. DAC LFSR register calculation algorithm

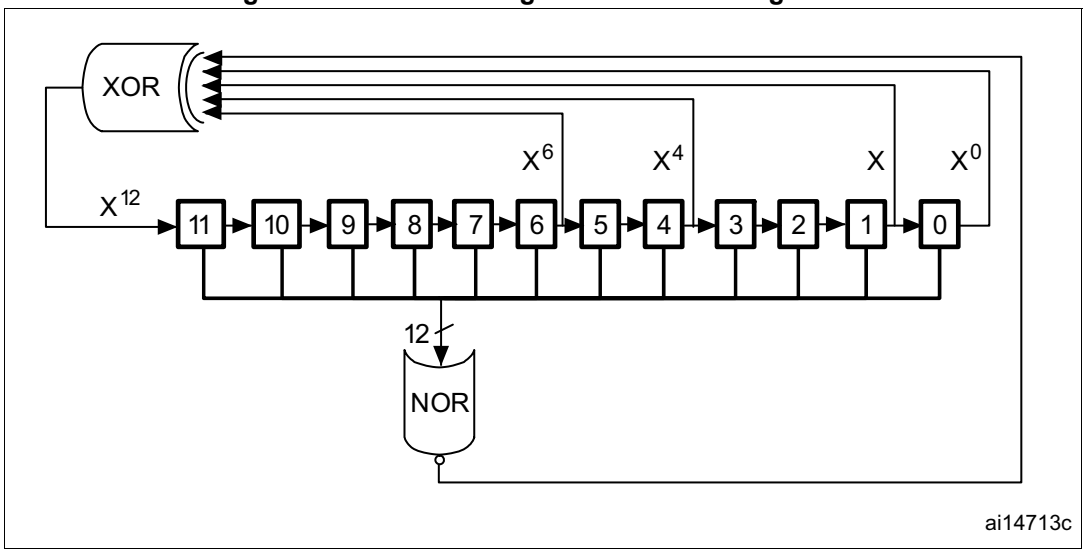

The LFSR value, that may be masked partially or totally by means of the MAMPx[3:0] bits in the DAC_CR register, is added up to the DAC_DHRx contents without overflow and this value is then stored into the DAC_DORx register.

If LFSR is 0x0000, a ‘1 is injected into it (antilock-up mechanism).

It is possible to reset LFSR wave generation by resetting the WAVEx[1:0] bits.

Figure 69. DAC conversion (SW trigger enabled) with LFSR wave generation

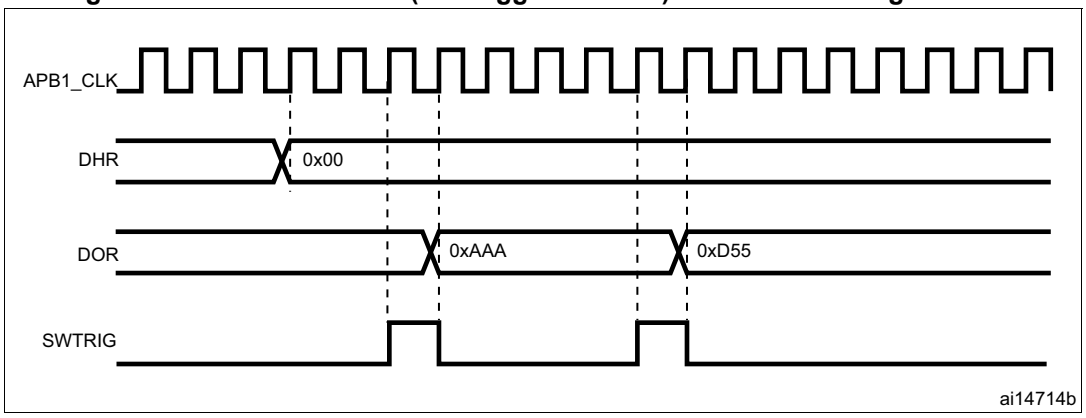

Note: The DAC trigger must be enabled for noise generation by setting the TENx bit in the DAC_CR register.

14.3.9 Triangle-wave generation

It is possible to add a small-amplitude triangular waveform on a DC or slowly varying signal. DAC triangle-wave generation is selected by setting WAVEx[1:0] to “10”. The amplitude is configured through the MAMPx[3:0] bits in the DAC_CR register. An internal triangle counter is incremented three APB1 clock cycles after each trigger event. The value of this counter is then added to the DAC_DHRx register without overflow and the sum is stored into the DAC_DORx register. The triangle counter is incremented as long as it is less than the maximum amplitude defined by the MAMPx[3:0] bits. Once the configured amplitude is reached, the counter is decremented down to 0, then incremented again and so on.

It is possible to reset triangle wave generation by resetting the WAVEx[1:0] bits.

Figure 70. DAC triangle wave generation

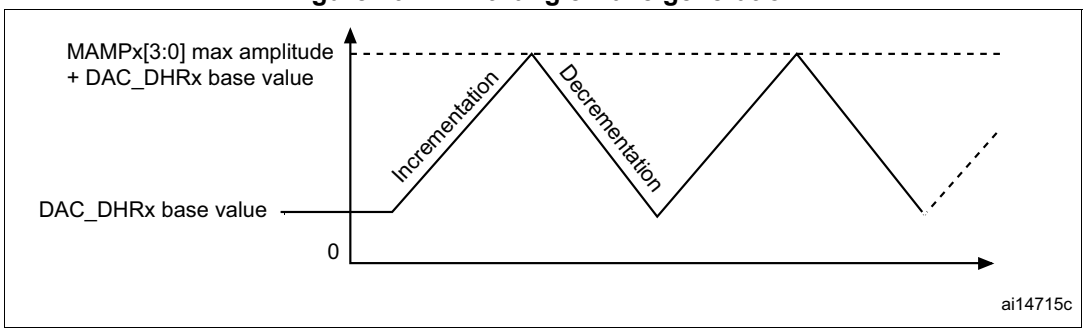

Figure 71. DAC conversion (SW trigger enabled) with triangle wave generation

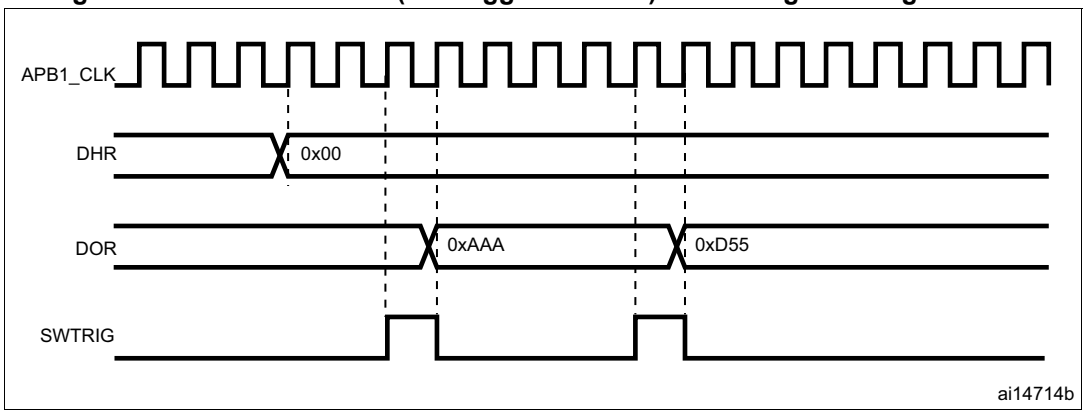

Note: The DAC trigger must be enabled for noise generation by setting the TENx bit in the DAC_CR register.

The MAMPx[3:0] bits must be configured before enabling the DAC, otherwise they cannot be changed.

14.4 Dual DAC channel conversion

To efficiently use the bus bandwidth in applications that require the two DAC channels at the same time, three dual registers are implemented: DHR8RD, DHR12RD and DHR12LD. A unique register access is then required to drive both DAC channels at the same time.

Eleven possible conversion modes are possible using the two DAC channels and these dual registers. All the conversion modes can nevertheless be obtained using separate DHRx registers if needed.

All modes are described in the paragraphs below.

14.4.1 Independent trigger without wave generation

To configure the DAC in this conversion mode, the following sequence is required:

- Set the two DAC channel trigger enable bits TEN1 and TEN2
- Configure different trigger sources by setting different values in the TSEL1[2:0] and TSEL2[2:0] bits
- Load the dual DAC channel data into the desired DHR register (DAC_DHR12RD, DAC_DHR12LD or DAC_DHR8RD)

When a DAC channel1 trigger arrives, the DHR1 register is transferred into DAC_DOR1 (three APB1 clock cycles later).

When a DAC channel2 trigger arrives, the DHR2 register is transferred into DAC_DOR2 (three APB1 clock cycles later).

14.4.2 Independent trigger with single LFSR generation

To configure the DAC in this conversion mode, the following sequence is required:

- Set the two DAC channel trigger enable bits TEN1 and TEN2
- Configure different trigger sources by setting different values in the TSEL1[2:0] and TSEL2[2:0] bits
- Configure the two DAC channel WAVEx[1:0] bits as “01” and the same LFSR mask value in the MAMPx[3:0] bits
- Load the dual DAC channel data into the desired DHR register (DHR12RD, DHR12LD or DHR8RD)

When a DAC channel1 trigger arrives, the LFSR1 counter, with the same mask, is added to the DHR1 register and the sum is transferred into DAC_DOR1 (three APB1 clock cycles later). Then the LFSR1 counter is updated.

When a DAC channel2 trigger arrives, the LFSR2 counter, with the same mask, is added to the DHR2 register and the sum is transferred into DAC_DOR2 (three APB1 clock cycles later). Then the LFSR2 counter is updated.

14.4.3 Independent trigger with different LFSR generation

To configure the DAC in this conversion mode, the following sequence is required:

- Set the two DAC channel trigger enable bits TEN1 and TEN2
- Configure different trigger sources by setting different values in the TSEL1[2:0] and TSEL2[2:0] bits
- Configure the two DAC channel WAVEx[1:0] bits as “01” and set different LFSR masks values in the MAMP1[3:0] and MAMP2[3:0] bits
- Load the dual DAC channel data into the desired DHR register (DAC_DHR12RD, DAC_DHR12LD or DAC_DHR8RD)

When a DAC channel1 trigger arrives, the LFSR1 counter, with the mask configured by MAMP1[3:0], is added to the DHR1 register and the sum is transferred into DAC_DOR1 (three APB1 clock cycles later). Then the LFSR1 counter is updated.

When a DAC channel2 trigger arrives, the LFSR2 counter, with the mask configured by MAMP2[3:0], is added to the DHR2 register and the sum is transferred into DAC_DOR2 (three APB1 clock cycles later). Then the LFSR2 counter is updated.

14.4.4 Independent trigger with single triangle generation

To configure the DAC in this conversion mode, the following sequence is required:

- Set the two DAC channel trigger enable bits TEN1 and TEN2
- Configure different trigger sources by setting different values in the TSEL1[2:0] and TSEL2[2:0] bits
- Configure the two DAC channel WAVEx[1:0] bits as “1x” and the same maximum amplitude value in the MAMPx[3:0] bits
- Load the dual DAC channel data into the desired DHR register (DAC_DHR12RD, DAC_DHR12LD or DAC_DHR8RD)

When a DAC channel1 trigger arrives, the DAC channel1 triangle counter, with the same triangle amplitude, is added to the DHR1 register and the sum is transferred into DAC_DOR1 (three APB1 clock cycles later). The DAC channel1 triangle counter is then updated.

When a DAC channel2 trigger arrives, the DAC channel2 triangle counter, with the same triangle amplitude, is added to the DHR2 register and the sum is transferred into DAC_DOR2 (three APB1 clock cycles later). The DAC channel2 triangle counter is then updated.

14.4.5 Independent trigger with different triangle generation

To configure the DAC in this conversion mode, the following sequence is required:

- Set the two DAC channel trigger enable bits TEN1 and TEN2
- Configure different trigger sources by setting different values in the TSEL1[2:0] and TSEL2[2:0] bits
- Configure the two DAC channel WAVEx[1:0] bits as “1x” and set different maximum amplitude values in the MAMP1[3:0] and MAMP2[3:0] bits
- Load the dual DAC channel data into the desired DHR register (DAC_DHR12RD, DAC_DHR12LD or DAC_DHR8RD)

When a DAC channel1 trigger arrives, the DAC channel1 triangle counter, with a triangle amplitude configured by MAMP1[3:0], is added to the DHR1 register and the sum is transferred into DAC_DOR1 (three APB1 clock cycles later). The DAC channel1 triangle counter is then updated.

When a DAC channel2 trigger arrives, the DAC channel2 triangle counter, with a triangle amplitude configured by MAMP2[3:0], is added to the DHR2 register and the sum is transferred into DAC_DOR2 (three APB1 clock cycles later). The DAC channel2 triangle counter is then updated.

14.4.6 Simultaneous software start

To configure the DAC in this conversion mode, the following sequence is required:

- Load the dual DAC channel data to the desired DHR register (DAC_DHR12RD, DAC_DHR12LD or DAC_DHR8RD)

In this configuration, one APB1 clock cycle later, the DHR1 and DHR2 registers are transferred into DAC_DOR1 and DAC_DOR2, respectively.

14.4.7 Simultaneous trigger without wave generation

To configure the DAC in this conversion mode, the following sequence is required:

- Set the two DAC channel trigger enable bits TEN1 and TEN2
- Configure the same trigger source for both DAC channels by setting the same value in the TSEL1[2:0] and TSEL2[2:0] bits
- Load the dual DAC channel data to the desired DHR register (DAC_DHR12RD, DAC_DHR12LD or DAC_DHR8RD)

When a trigger arrives, the DHR1 and DHR2 registers are transferred into DAC_DOR1 and DAC_DOR2, respectively (after three APB1 clock cycles).

14.4.8 Simultaneous trigger with single LFSR generation

To configure the DAC in this conversion mode, the following sequence is required:

- Set the two DAC channel trigger enable bits TEN1 and TEN2
- Configure the same trigger source for both DAC channels by setting the same value in the TSEL1[2:0] and TSEL2[2:0] bits
- Configure the two DAC channel WAVEx[1:0] bits as “01” and the same LFSR mask value in the MAMPx[3:0] bits
- Load the dual DAC channel data to the desired DHR register (DHR12RD, DHR12LD or DHR8RD)

When a trigger arrives, the LFSR1 counter, with the same mask, is added to the DHR1 register and the sum is transferred into DAC_DOR1 (three APB1 clock cycles later). The LFSR1 counter is then updated. At the same time, the LFSR2 counter, with the same mask, is added to the DHR2 register and the sum is transferred into DAC_DOR2 (three APB1 clock cycles later). The LFSR2 counter is then updated.

14.4.9 Simultaneous trigger with different LFSR generation

To configure the DAC in this conversion mode, the following sequence is required:

- Set the two DAC channel trigger enable bits TEN1 and TEN2
- Configure the same trigger source for both DAC channels by setting the same value in the TSEL1[2:0] and TSEL2[2:0] bits
- Configure the two DAC channel WAVEx[1:0] bits as “01” and set different LFSR mask values using the MAMP1[3:0] and MAMP2[3:0] bits
- Load the dual DAC channel data into the desired DHR register (DAC_DHR12RD, DAC_DHR12LD or DAC_DHR8RD)

When a trigger arrives, the LFSR1 counter, with the mask configured by MAMP1[3:0], is added to the DHR1 register and the sum is transferred into DAC_DOR1 (three APB1 clock cycles later). The LFSR1 counter is then updated.
At the same time, the LFSR2 counter, with the mask configured by MAMP2[3:0], is added to the DHR2 register and the sum is transferred into DAC_DOR2 (three APB1 clock cycles later). The LFSR2 counter is then updated.

14.4.10 Simultaneous trigger with single triangle generation

To configure the DAC in this conversion mode, the following sequence is required:

- Set the two DAC channel trigger enable bits TEN1 and TEN2
- Configure the same trigger source for both DAC channels by setting the same value in the TSEL1[2:0] and TSEL2[2:0] bits
- Configure the two DAC channel WAVEx[1:0] bits as “1x” and the same maximum amplitude value using the MAMPx[3:0] bits
- Load the dual DAC channel data into the desired DHR register (DAC_DHR12RD, DAC_DHR12LD or DAC_DHR8RD)

When a trigger arrives, the DAC channel1 triangle counter, with the same triangle amplitude, is added to the DHR1 register and the sum is transferred into DAC_DOR1 (three APB1 clock cycles later). The DAC channel1 triangle counter is then updated.
At the same time, the DAC channel2 triangle counter, with the same triangle amplitude, is added to the DHR2 register and the sum is transferred into DAC_DOR2 (three APB1 clock cycles later). The DAC channel2 triangle counter is then updated.

14.4.11 Simultaneous trigger with different triangle generation

To configure the DAC in this conversion mode, the following sequence is required:

- Set the two DAC channel trigger enable bits TEN1 and TEN2
- Configure the same trigger source for both DAC channels by setting the same value in the TSEL1[2:0] and TSEL2[2:0] bits
- Configure the two DAC channel WAVEx[1:0] bits as “1x” and set different maximum amplitude values in the MAMP1[3:0] and MAMP2[3:0] bits
- Load the dual DAC channel data into the desired DHR register (DAC_DHR12RD, DAC_DHR12LD or DAC_DHR8RD)

When a trigger arrives, the DAC channel1 triangle counter, with a triangle amplitude configured by MAMP1[3:0], is added to the DHR1 register and the sum is transferred into DAC_DOR1 (three APB1 clock cycles later). Then the DAC channel1 triangle counter is updated.
At the same time, the DAC channel2 triangle counter, with a triangle amplitude configured by MAMP2[3:0], is added to the DHR2 register and the sum is transferred into DAC_DOR2 (three APB1 clock cycles later). Then the DAC channel2 triangle counter is updated.

14.5 DAC registers

Refer to *Section 1.1: List of abbreviations for registers for registers* for a list of abbreviations used in register descriptions.

The peripheral registers have to be accessed by words (32 bits).

14.5.1 DAC control register (DAC_CR)

Address offset: 0x00

Reset value: 0x0000 0000

31	30	29	28	27	26	25	24	23	22	21	20	19	18	17	16
Reserved		DMAUDRIE2	DMAEN2	MAMP2[3:0]				WAVE2[1:0]		TSEL2[2:0]			TEN2	BOFF2	EN2
		rw	rw	rw	rw	rw	rw	rw	rw	rw	rw	rw	rw	rw	rw

15	14	13	12	11	10	9	8	7	6	5	4	3	2	1	0
Reserved		DMAUDRIE1	DMAEN1	MAMP1[3:0]				WAVE1[1:0]		TSEL1[2:0]			TEN1	BOFF1	EN1
		rw	rw	rw	rw	rw	rw	rw	rw	rw	rw	rw	rw	rw	rw

Bits 31:30 Reserved, must be kept at reset value.

Bits 29 **DMAUDRIE2**: DAC channel2 DMA underrun interrupt enable
This bit is set and cleared by software.
0: DAC channel2 DMA underrun interrupt disabled
1: DAC channel2 DMA underrun interrupt enabled

Bit 28 **DMAEN2**: DAC channel2 DMA enable
This bit is set and cleared by software.
0: DAC channel2 DMA mode disabled
1: DAC channel2 DMA mode enabled

Bits 27:24 **MAMP2[3:0]**: DAC channel2 mask/amplitude selector
These bits are written by software to select mask in wave generation mode or amplitude in triangle generation mode.
0000: Unmask bit0 of LFSR/ triangle amplitude equal to 1
0001: Unmask bits[1:0] of LFSR/ triangle amplitude equal to 3
0010: Unmask bits[2:0] of LFSR/ triangle amplitude equal to 7
0011: Unmask bits[3:0] of LFSR/ triangle amplitude equal to 15
0100: Unmask bits[4:0] of LFSR/ triangle amplitude equal to 31
0101: Unmask bits[5:0] of LFSR/ triangle amplitude equal to 63
0110: Unmask bits[6:0] of LFSR/ triangle amplitude equal to 127
0111: Unmask bits[7:0] of LFSR/ triangle amplitude equal to 255
1000: Unmask bits[8:0] of LFSR/ triangle amplitude equal to 511
1001: Unmask bits[9:0] of LFSR/ triangle amplitude equal to 1023
1010: Unmask bits[10:0] of LFSR/ triangle amplitude equal to 2047
≥ 1011: Unmask bits[11:0] of LFSR/ triangle amplitude equal to 4095

Bits 23:22 **WAVE2[1:0]**: DAC channel2 noise/triangle wave generation enable
These bits are set/reset by software.
00: wave generation disabled
01: Noise wave generation enabled
1x: Triangle wave generation enabled
Note: Only used if bit TEN2 = 1 (DAC channel2 trigger enabled)

Bits 21:19 **TSEL2[2:0]**: DAC channel2 trigger selection

These bits select the external event used to trigger DAC channel2
000: Timer 6 TRGO event
001: Timer 8 TRGO event
010: Timer 7 TRGO event
011: Timer 5 TRGO event
100: Timer 2 TRGO event
101: Timer 4 TRGO event
110: External line9
111: Software trigger

Note: Only used if bit TEN2 = 1 (DAC channel2 trigger enabled).

Bit 18 **TEN2**: DAC channel2 trigger enable

This bit is set and cleared by software to enable/disable DAC channel2 trigger
0: DAC channel2 trigger disabled and data written into the DAC_DHRx register are transferred one APB1 clock cycle later to the DAC_DOR2 register
1: DAC channel2 trigger enabled and data from the DAC_DHRx register are transferred three APB1 clock cycles later to the DAC_DOR2 register

Note: When software trigger is selected, the transfer from the DAC_DHRx reg*ister to the DAC_DOR2 register takes only one APB1 clock cycle.*

Bit 17 **BOFF2**: DAC channel2 output buffer disable

This bit is set and cleared by software to enable/disable DAC channel2 output buffer.
0: DAC channel2 output buffer enabled
1: DAC channel2 output buffer disabled

Bit 16 **EN2**: DAC channel2 enable

This bit is set and cleared by software to enable/disable DAC channel2.
0: DAC channel2 disabled
1: DAC channel2 enabled

Bits 15:14 Reserved, must be kept at reset value.

Bit 13 **DMAUDRIE1**: DAC channel1 DMA Underrun Interrupt enable

This bit is set and cleared by software.
0: DAC channel1 DMA Underrun Interrupt disabled
1: DAC channel1 DMA Underrun Interrupt enabled

Bit 12 **DMAEN1**: DAC channel1 DMA enable

This bit is set and cleared by software.
0: DAC channel1 DMA mode disabled
1: DAC channel1 DMA mode enabled

Bits 11:8 **MAMP1[3:0]**: DAC channel1 mask/amplitude selector

These bits are written by software to select mask in wave generation mode or amplitude in triangle generation mode.

0000: Unmask bit0 of LFSR/ triangle amplitude equal to 1
0001: Unmask bits[1:0] of LFSR/ triangle amplitude equal to 3
0010: Unmask bits[2:0] of LFSR/ triangle amplitude equal to 7
0011: Unmask bits[3:0] of LFSR/ triangle amplitude equal to 15
0100: Unmask bits[4:0] of LFSR/ triangle amplitude equal to 31
0101: Unmask bits[5:0] of LFSR/ triangle amplitude equal to 63
0110: Unmask bits[6:0] of LFSR/ triangle amplitude equal to 127
0111: Unmask bits[7:0] of LFSR/ triangle amplitude equal to 255
1000: Unmask bits[8:0] of LFSR/ triangle amplitude equal to 511
1001: Unmask bits[9:0] of LFSR/ triangle amplitude equal to 1023
1010: Unmask bits[10:0] of LFSR/ triangle amplitude equal to 2047
≥ 1011: Unmask bits[11:0] of LFSR/ triangle amplitude equal to 4095

Bits 7:6 **WAVE1[1:0]**: DAC channel1 noise/triangle wave generation enable

These bits are set and cleared by software.

00: wave generation disabled
01: Noise wave generation enabled
1x: Triangle wave generation enabled

Note: Only used if bit TEN1 = 1 (DAC channel1 trigger enabled).

Bits 5:3 **TSEL1[2:0]**: DAC channel1 trigger selection

These bits select the external event used to trigger DAC channel1.

000: Timer 6 TRGO event
001: Timer 8 TRGO event
010: Timer 7 TRGO event
011: Timer 5 TRGO event
100: Timer 2 TRGO event
101: Timer 4 TRGO event
110: External line9
111: Software trigger

Note: Only used if bit TEN1 = 1 (DAC channel1 trigger enabled).

Bit 2 **TEN1**: DAC channel1 trigger enable

This bit is set and cleared by software to enable/disable DAC channel1 trigger.

0: DAC channel1 trigger disabled and data written into the DAC_DHRx register are transferred one APB1 clock cycle later to the DAC_DOR1 register
1: DAC channel1 trigger enabled and data from the DAC_DHRx register are transferred three APB1 clock cycles later to the DAC_DOR1 register

Note: When software trigger is selected, the transfer from the DAC_DHRx register to the DAC_DOR1 register takes only one APB1 clock cycle.

Bit 1 **BOFF1**: DAC channel1 output buffer disable

This bit is set and cleared by software to enable/disable DAC channel1 output buffer.

0: DAC channel1 output buffer enabled
1: DAC channel1 output buffer disabled

Bit 0 **EN1**: DAC channel1 enable

This bit is set and cleared by software to enable/disable DAC channel1.

0: DAC channel1 disabled
1: DAC channel1 enabled

14.5.2 DAC software trigger register (DAC_SWTRIGR)

Address offset: 0x04
Reset value: 0x0000 0000

31	30	29	28	27	26	25	24	23	22	21	20	19	18	17	16
Reserved															

15	14	13	12	11	10	9	8	7	6	5	4	3	2	1	0
Reserved														SWTRIG2	SWTRIG1
														w	w

Bits 31:2 Reserved, must be kept at reset value.

Bit 1 **SWTRIG2**: DAC channel2 software trigger

This bit is set and cleared by software to enable/disable the software trigger.

0: Software trigger disabled

1: Software trigger enabled

Note: This bit is cleared by hardware (one APB1 clock cycle later) once the DAC_DHR2 register value has been loaded into the DAC_DOR2 register.

Bit 0 **SWTRIG1**: DAC channel1 software trigger

This bit is set and cleared by software to enable/disable the software trigger.

0: Software trigger disabled

1: Software trigger enabled

Note: This bit is cleared by hardware (one APB1 clock cycle later) once the DAC_DHR1 register value has been loaded into the DAC_DOR1 register.

14.5.3 DAC channel1 12-bit right-aligned data holding register (DAC_DHR12R1)

Address offset: 0x08
Reset value: 0x0000 0000

31	30	29	28	27	26	25	24	23	22	21	20	19	18	17	16
Reserved															

15	14	13	12	11	10	9	8	7	6	5	4	3	2	1	0
Reserved				DACC1DHR[11:0]											
				rw	rw	rw	rw	rw	rw	rw	rw	rw	rw	rw	rw

Bits 31:12 Reserved, must be kept at reset value.

Bits 11:0 **DACC1DHR[11:0]**: DAC channel1 12-bit right-aligned data

These bits are written by software which specifies 12-bit data for DAC channel1.

14.5.4 DAC channel1 12-bit left aligned data holding register (DAC_DHR12L1)

Address offset: 0x0C

Reset value: 0x0000 0000

31	30	29	28	27	26	25	24	23	22	21	20	19	18	17	16
Reserved															
15	14	13	12	11	10	9	8	7	6	5	4	3	2	1	0
DACC1DHR[11:0]												Reserved			
rw	rw	rw	rw	rw	rw	rw	rw	rw	rw	rw	rw				

Bits 31:16 Reserved, must be kept at reset value.

Bits 15:4 **DACC1DHR[11:0]**: DAC channel1 12-bit left-aligned data
These bits are written by software which specifies 12-bit data for DAC channel1.

Bits 3:0 Reserved, must be kept at reset value.

14.5.5 DAC channel1 8-bit right aligned data holding register (DAC_DHR8R1)

Address offset: 0x10

Reset value: 0x0000 0000

31	30	29	28	27	26	25	24	23	22	21	20	19	18	17	16
Reserved															
15	14	13	12	11	10	9	8	7	6	5	4	3	2	1	0
Reserved								DACC1DHR[7:0]							
								rw	rw	rw	rw	rw	rw	rw	rw

Bits 31:8 Reserved, must be kept at reset value.

Bits 7:0 **DACC1DHR[7:0]**: DAC channel1 8-bit right-aligned data
These bits are written by software which specifies 8-bit data for DAC channel1.

14.5.6 DAC channel2 12-bit right aligned data holding register (DAC_DHR12R2)

Address offset: 0x14

Reset value: 0x0000 0000

31	30	29	28	27	26	25	24	23	22	21	20	19	18	17	16
Reserved															
15	14	13	12	11	10	9	8	7	6	5	4	3	2	1	0
Reserved				DACC2DHR[11:0]											
				rw	rw	rw	rw	rw	rw	rw	rw	rw	rw	rw	rw

Bits 31:12 Reserved, must be kept at reset value.

Bits 11:0 **DACC2DHR[11:0]**: DAC channel2 12-bit right-aligned data
These bits are written by software which specifies 12-bit data for DAC channel2.

14.5.7 DAC channel2 12-bit left aligned data holding register (DAC_DHR12L2)

Address offset: 0x18

Reset value: 0x0000 0000

31	30	29	28	27	26	25	24	23	22	21	20	19	18	17	16
Reserved															
15	14	13	12	11	10	9	8	7	6	5	4	3	2	1	0
DACC2DHR[11:0]												Reserved			
rw	rw	rw	rw	rw	rw	rw	rw	rw	rw	rw	rw				

Bits 31:16 Reserved, must be kept at reset value.

Bits 15:4 **DACC2DHR[11:0]**: DAC channel2 12-bit left-aligned data
These bits are written by software which specify 12-bit data for DAC channel2.

Bits 3:0 Reserved, must be kept at reset value.

14.5.8 DAC channel2 8-bit right-aligned data holding register (DAC_DHR8R2)

Address offset: 0x1C

Reset value: 0x0000 0000

31	30	29	28	27	26	25	24	23	22	21	20	19	18	17	16
Reserved															
15	14	13	12	11	10	9	8	7	6	5	4	3	2	1	0
Reserved								DACC2DHR[7:0]							
								rw	rw	rw	rw	rw	rw	rw	rw

Bits 31:8 Reserved, must be kept at reset value.

Bits 7:0 **DACC2DHR[7:0]**: DAC channel2 8-bit right-aligned data
These bits are written by software which specifies 8-bit data for DAC channel2.

14.5.9 Dual DAC 12-bit right-aligned data holding register (DAC_DHR12RD)

Address offset: 0x20

Reset value: 0x0000 0000

31	30	29	28	27	26	25	24	23	22	21	20	19	18	17	16
Reserved				DACC2DHR[11:0]											
				rw	rw	rw	rw	rw	rw	rw	rw	rw	rw	rw	rw
15	14	13	12	11	10	9	8	7	6	5	4	3	2	1	0
Reserved				DACC1DHR[11:0]											
				rw	rw	rw	rw	rw	rw	rw	rw	rw	rw	rw	rw

Bits 31:28 Reserved, must be kept at reset value.

Bits 27:16 **DACC2DHR[11:0]**: DAC channel2 12-bit right-aligned data
These bits are written by software which specifies 12-bit data for DAC channel2.

Bits 15:12 Reserved, must be kept at reset value.

Bits 11:0 **DACC1DHR[11:0]**: DAC channel1 12-bit right-aligned data
These bits are written by software which specifies 12-bit data for DAC channel1.

14.5.10 DUAL DAC 12-bit left aligned data holding register (DAC_DHR12LD)

Address offset: 0x24

Reset value: 0x0000 0000

31	30	29	28	27	26	25	24	23	22	21	20	19	18	17	16
DACC2DHR[11:0]												Reserved			
rw	rw	rw	rw	rw	rw	rw	rw	rw	rw	rw	rw				
15	14	13	12	11	10	9	8	7	6	5	4	3	2	1	0
DACC1DHR[11:0]												Reserved			
rw	rw	rw	rw	rw	rw	rw	rw	rw	rw	rw	rw				

Bits 31:20 **DACC2DHR[11:0]**: DAC channel2 12-bit left-aligned data
These bits are written by software which specifies 12-bit data for DAC channel2.

Bits 19:16 Reserved, must be kept at reset value.

Bits 15:4 **DACC1DHR[11:0]**: DAC channel1 12-bit left-aligned data
These bits are written by software which specifies 12-bit data for DAC channel1.

Bits 3:0 Reserved, must be kept at reset value.

14.5.11 DUAL DAC 8-bit right aligned data holding register (DAC_DHR8RD)

Address offset: 0x28

Reset value: 0x0000 0000

31	30	29	28	27	26	25	24	23	22	21	20	19	18	17	16
Reserved															
15	14	13	12	11	10	9	8	7	6	5	4	3	2	1	0
DACC2DHR[7:0]								DACC1DHR[7:0]							
rw	rw	rw	rw	rw	rw	rw	rw	rw	rw	rw	rw	rw	rw	rw	rw

Bits 31:16 Reserved, must be kept at reset value.

Bits 15:8 **DACC2DHR[7:0]**: DAC channel2 8-bit right-aligned data
These bits are written by software which specifies 8-bit data for DAC channel2.

Bits 7:0 **DACC1DHR[7:0]**: DAC channel1 8-bit right-aligned data
These bits are written by software which specifies 8-bit data for DAC channel1.

14.5.12 DAC channel1 data output register (DAC_DOR1)

Address offset: 0x2C

Reset value: 0x0000 0000

31	30	29	28	27	26	25	24	23	22	21	20	19	18	17	16
Reserved															
15	14	13	12	11	10	9	8	7	6	5	4	3	2	1	0
Reserved				DACC1DOR[11:0]											
				r	r	r	r	r	r	r	r	r	r	r	r

Bits 31:12 Reserved, must be kept at reset value.

Bit 11:0 **DACC1DOR[11:0]**: DAC channel1 data output
These bits are read-only, they contain data output for DAC channel1.

14.5.13 DAC channel2 data output register (DAC_DOR2)

Address offset: 0x30
Reset value: 0x0000 0000

31	30	29	28	27	26	25	24	23	22	21	20	19	18	17	16
Reserved															
15	14	13	12	11	10	9	8	7	6	5	4	3	2	1	0
Reserved				DACC2DOR[11:0]											
				r	r	r	r	r	r	r	r	r	r	r	r

Bits 31:12 Reserved, must be kept at reset value.

Bits 11:0 **DACC2DOR[11:0]**: DAC channel2 data output
These bits are read-only, they contain data output for DAC channel2.

14.5.14 DAC status register (DAC_SR)

Address offset: 0x34

Reset value: 0x0000 0000

31	30	29	28	27	26	25	24	23	22	21	20	19	18	17	16
Reserved		DMAUDR2 rc_w1	Reserved												
15	14	13	12	11	10	9	8	7	6	5	4	3	2	1	0
Reserved		DMAUDR1 rc_w1	Reserved												

Bits 31:30 Reserved, must be kept at reset value.

Bit 29 **DMAUDR2**: DAC channel2 DMA underrun flag

This bit is set by hardware and cleared by software (by writing it to 1).
0: No DMA underrun error condition occurred for DAC channel2
1: DMA underrun error condition occurred for DAC channel2 (the currently selected trigger is driving DAC channel2 conversion at a frequency higher than the DMA service capability rate)

Bits 28:14 Reserved, must be kept at reset value.

Bit 13 **DMAUDR1**: DAC channel1 DMA underrun flag

This bit is set by hardware and cleared by software (by writing it to 1).
0: No DMA underrun error condition occurred for DAC channel1
1: DMA underrun error condition occurred for DAC channel1 (the currently selected trigger is driving DAC channel1 conversion at a frequency higher than the DMA service capability rate)

Bits 12:0 Reserved, must be kept at reset value.

14.5.15 DAC register map

Table 76 summarizes the DAC registers.

Table 76. DAC register map

Offset	Register	31	30	29	28	27	26	25	24	23	22	21	20	19	18	17	16	15	14	13	12	11	10	9	8	7	6	5	4	3	2	1	0
0x00	DAC_CR	Reserved		DMAUDRIE2	DMAEN2	MAMP2[3:0]				WAVE 2[2:0]		TSEL2[2:0]			TEN2	BOFF2	EN2	Reserved		DMAUDRIE1	DMAEN1	MAMP1[3:0]				WAVE 1[2:0]		TSEL1[2:0]			TEN1	BOFF1	EN1
0x04	DAC_ SWTRIGR	Reserved																														SWTRIG2	SWTRIG1
0x08	DAC_ DHR12R1	Reserved																				DACC1DHR[11:0]											
0x0C	DAC_ DHR12L1	Reserved																DACC1DHR[11:0]												Reserved			
0x10	DAC_ DHR8R1	Reserved																								DACC1DHR[7:0]							
0x14	DAC_ DHR12R2	Reserved																				DACC2DHR[11:0]											
0x18	DAC_ DHR12L2	Reserved																DACC2DHR[11:0]												Reserved			

Table 76. DAC register map (continued)

Offset	Register	31	30	29	28	27	26	25	24	23	22	21	20	19	18	17	16	15	14	13	12	11	10	9	8	7	6	5	4	3	2	1	0
0x1C	DAC_ DHR8R2	Reserved																								DACC2DHR[7:0]							
0x20	DAC_ DHR12RD	Reserved				DACC2DHR[11:0]												Reserved				DACC1DHR[11:0]											
0x24	DAC_ DHR12LD	DACC2DHR[11:0]												Reserved				DACC1DHR[11:0]												Reserved			
0x28	DAC_ DHR8RD	Reserved																DACC2DHR[7:0]								DACC1DHR[7:0]							
0x2C	DAC_ DOR1	Reserved																				DACC1DOR[11:0]											
0x30	DAC_ DOR2	Reserved																				DACC2DOR[11:0]											
0x34	DAC_SR	Reserved		DMAUDR2	Reserved															DMAUDR1	Reserved												

Refer to *Section 2.3: Memory map* for the register boundary addresses.

15 Digital camera interface (DCMI)

This section applies to all STM32F4xx devices, unless otherwise specified.

15.1 DCMI introduction

The digital camera is a synchronous parallel interface able to receive a high-speed data flow from an external 8-, 10-, 12- or 14-bit CMOS camera module. It supports different data formats: YCbCr4:2:2/RGB565 progressive video and compressed data (JPEG).

This interface is for use with black & white cameras, X24 and X5 cameras, and it is assumed that all pre-processing like resizing is performed in the camera module.

15.2 DCMI main features

- 8-, 10-, 12- or 14-bit parallel interface
- Embedded/external line and frame synchronization
- Continuous or snapshot mode
- Crop feature
- Supports the following data formats:
  - 8/10/12/14- bit progressive video: either monochrome or raw bayer
  - YCbCr 4:2:2 progressive video
  - RGB 565 progressive video
  - Compressed data: JPEG

15.3 DCMI pins

Table 77 shows the DCMI pins.

Table 77. DCMI pins

Name	Signal type
D[0:13]	Data inputs
HSYNC	Horizontal synchronization input
VSYNC	Vertical synchronization input
PIXCLK	Pixel clock input

15.4 DCMI clocks

The digital camera interface uses two clock domains PIXCLK and HCLK. The signals generated with PIXCLK are sampled on the rising edge of HCLK once they are stable. An enable signal is generated in the HCLK domain, to indicate that data coming from the camera are stable and can be sampled. The minimum PIXCLK period must be higher than 2.5 HCLK periods.

15.5 DCMI functional overview

The digital camera interface is a synchronous parallel interface that can receive high-speed (up to 54 Mbytes/s) data flows. It consists of up to 14 data lines (D13-D0) and a pixel clock line (PIXCLK). The pixel clock has a programmable polarity, so that data can be captured on either the rising or the falling edge of the pixel clock.

The data are packed into a 32-bit data register (DCMI_DR) and then transferred through a general-purpose DMA channel. The image buffer is managed by the DMA, not by the camera interface.

The data received from the camera can be organized in lines/frames (raw YUB/RGB/Bayer modes) or can be a sequence of JPEG images. To enable JPEG image reception, the JPEG bit (bit 3 of DCMI_CR register) must be set.

The data flow is synchronized either by hardware using the optional HSYNC (horizontal synchronization) and VSYNC (vertical synchronization) signals or by synchronization codes embedded in the data flow.

Figure 72 shows the DCMI block diagram.

Figure 72. DCMI block diagram

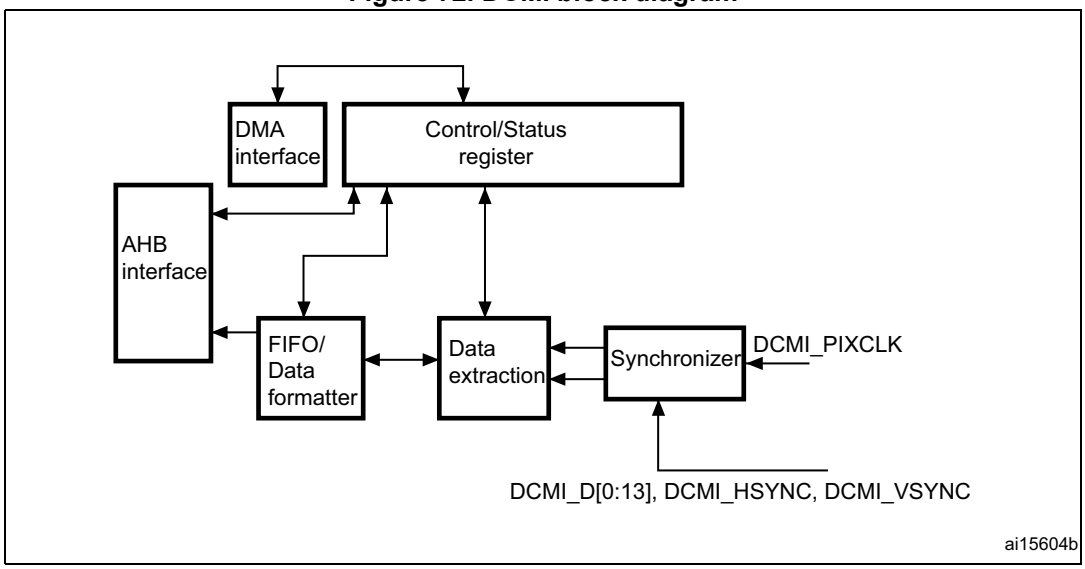

Figure 73. Top-level block diagram

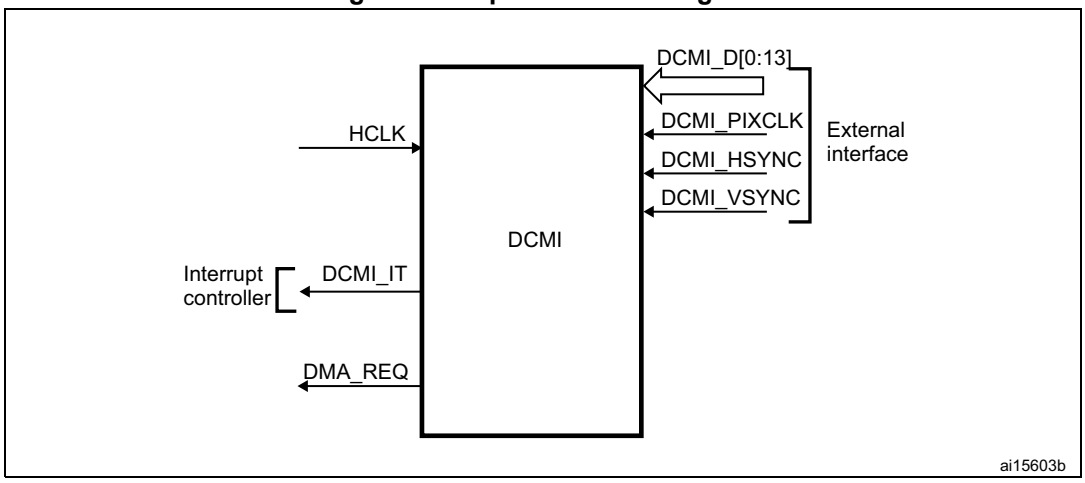

15.5.1 DMA interface

The DMA interface is active when the CAPTURE bit in the DCMI_CR register is set. A DMA request is generated each time the camera interface receives a complete 32-bit data block in its register.

15.5.2 DCMI physical interface

The interface is composed of 11/13/15/17 inputs. Only the Slave mode is supported.

The camera interface can capture 8-bit, 10-bit, 12-bit or 14-bit data depending on the EDM[1:0] bits in the DCMI_CR register. If less than 14 bits are used, the unused data pins must not be assigned to DCMI interface through GPIO alternate functions.

Table 78. DCMI signals

Signal name		Signal description
8 bits 10 bits 12 bits 14 bits	D[0..7] D[0..9] D[0..11] D[0..13]	Data
PIXCLK		Pixel clock
HSYNC		Horizontal synchronization / Data valid
VSYNC		Vertical synchronization

The data are synchronous with PIXCLK and change on the rising/falling edge of the pixel clock depending on the polarity.

The HSYNC signal indicates the start/end of a line.

The VSYNC signal indicates the start/end of a frame

Figure 74. DCMI signal waveforms

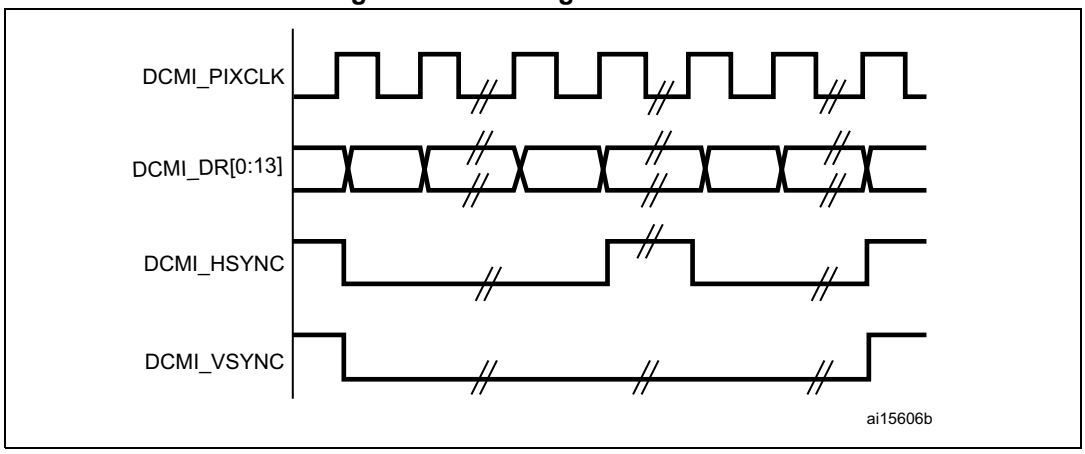

1. The capture edge of DCMI_PIXCLK is the falling edge, the active state of DCMI_HSYNC and DCMI_VSYNC is 1.
1. DCMI_HSYNC and DCMI_VSYNC can change states at the same time.

8-bit data

When EDM[1:0] in DCMI_CR are programmed to “00” the interface captures 8 LSB’s at its input (D[0:7]) and stores them as 8-bit data. The D[13:8] inputs are ignored. In this case, to capture a 32-bit word, the camera interface takes four pixel clock cycles.

The first captured data byte is placed in the LSB position in the 32-bit word and the 4th captured data byte is placed in the MSB position in the 32-bit word. *Table 79* gives an example of the positioning of captured data bytes in two 32-bit words.

Table 79. Positioning of captured data bytes in 32-bit words (8-bit width)

Byte address	31:24	23:16	15:8	7:0
0	D_{n+3}[7:0]	D_{n+2}[7:0]	D_{n+1}[7:0]	D_n[7:0]
4	D_{n+7}[7:0]	D_{n+6}[7:0]	D_{n+5}[7:0]	D_{n+4}[7:0]

10-bit data

When EDM[1:0] in DCMI_CR are programmed to “01”, the camera interface captures 10-bit data at its input D[0..9] and stores them as the 10 least significant bits of a 16-bit word. The remaining most significant bits in the DCMI_DR register (bits 11 to 15) are cleared to zero. So, in this case, a 32-bit data word is made up every two pixel clock cycles.

The first captured data are placed in the LSB position in the 32-bit word and the 2nd captured data are placed in the MSB position in the 32-bit word as shown in *Table 80*.

Table 80. Positioning of captured data bytes in 32-bit words (10-bit width)

Byte address	31:26	25:16	15:10	9:0
0	0	D_{n+1}[9:0]	0	D_n[9:0]
4	0	D_{n+3}[9:0]	0	D_{n+2}[9:0]

12-bit data

When EDM[1:0] in DCMI_CR are programmed to “10”, the camera interface captures the 12-bit data at its input D[0..11] and stores them as the 12 least significant bits of a 16-bit word. The remaining most significant bits are cleared to zero. So, in this case a 32-bit data word is made up every two pixel clock cycles.

The first captured data are placed in the LSB position in the 32-bit word and the 2nd captured data are placed in the MSB position in the 32-bit word as shown in *Table 81*.

Table 81. Positioning of captured data bytes in 32-bit words (12-bit width)

Byte address	31:28	27:16	15:12	11:0
0	0	D_{n+1}[11:0]	0	D_n[11:0]
4	0	D_{n+3}[11:0]	0	D_{n+2}[11:0]

14-bit data

When EDM[1:0] in DCMI_CR are programmed to “11”, the camera interface captures the 14-bit data at its input D[0..13] and stores them as the 14 least significant bits of a 16-bit word. The remaining most significant bits are cleared to zero. So, in this case a 32-bit data word is made up every two pixel clock cycles.

The first captured data are placed in the LSB position in the 32-bit word and the 2nd captured data are placed in the MSB position in the 32-bit word as shown in *Table 82*.

Table 82. Positioning of captured data bytes in 32-bit words (14-bit width)

Byte address	31:30	29:16	15:14	13:0
0	0	D_{n+1}[13:0]	0	D_n[13:0]
4	0	D_{n+3}[13:0]	0	D_{n+2}[13:0]

15.5.3 Synchronization

The digital camera interface supports embedded or hardware (HSYNC & VSYNC) synchronization. When embedded synchronization is used, it is up to the digital camera module to make sure that the 0x00 and 0xFF values are used ONLY for synchronization (not in data). Embedded synchronization codes are supported only for the 8-bit parallel data interface width (that is, in the DCMI_CR register, the EDM[1:0] bits should be cleared to “00”).

For compressed data, the DCMI supports only the hardware synchronization mode. In this case, VSYNC is used as a start/end of the image, and HSYNC is used as a Data Valid signal. *Figure 75* shows the corresponding timing diagram.

Figure 75. Timing diagram

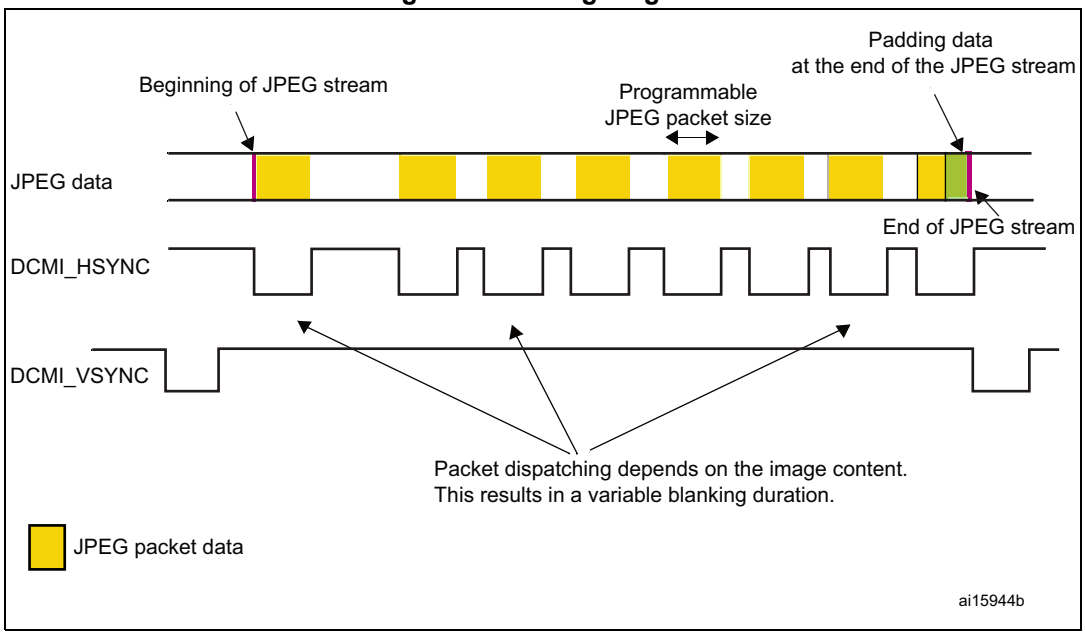

Hardware synchronization mode

In hardware synchronisation mode, the two synchronization signals (HSYNC/VSYNC) are used.

Depending on the camera module/mode, data may be transmitted during horizontal/vertical synchronisation periods. The HSYNC/VSYNC signals act like blanking signals since all the data received during HSYNC/VSYNC active periods are ignored.

In order to correctly transfer images into the DMA/RAM buffer, data transfer is synchronized with the VSYNC signal. When the hardware synchronisation mode is selected, and capture is enabled (CAPTURE bit set in DCMI_CR), data transfer is synchronized with the deactivation of the VSYNC signal (next start of frame).

Transfer can then be continuous, with successive frames transferred by DMA to successive buffers or the same/circular buffer. To allow the DMA management of successive frames, a VSIF (Vertical synchronization interrupt flag) is activated at the end of each frame.

Embedded data synchronization mode

In this synchronisation mode, the data flow is synchronised using 32-bit codes embedded in the data flow. These codes use the 0x00/0xFF values that are *not* used in data anymore. There are 4 types of codes, all with a 0xFF0000XY format. The embedded synchronization codes are supported only in 8-bit parallel data width capture (in the DCMI_CR register, the EDM[1:0] bits should be programmed to “00”). For other data widths, this mode generates unpredictable results and must not be used.

Note: Camera modules can have 8 such codes (in interleaved mode). For this reason, the interleaved mode is not supported by the camera interface (otherwise, every other half-frame would be discarded).

- Mode 2

  Four embedded codes signal the following events

  – Frame start (FS)
  – Frame end (FE)
  – Line start (LS)
  – Line end (LE)

  The XY values in the 0xFF0000XY format of the four codes are programmable (see *Section 15.8.7: DCMI embedded synchronization code register (DCMI_ESCR)*).

  A 0xFF value programmed as a “frame end” means that all the unused codes are interpreted as valid frame end codes.

  In this mode, once the camera interface has been enabled, the frame capture starts after the first occurrence of the frame end (FE) code followed by a frame start (FS) code.

- Mode 1

  An alternative coding is the camera mode 1. This mode is ITU656 compatible.

  The codes signal another set of events:

  – SAV (active line) - line start
  – EAV (active line) - line end
  – SAV (blanking) - end of line during interframe blanking period
  – EAV (blanking) - end of line during interframe blanking period

This mode can be supported by programming the following codes:

- FS ≤ 0xFF
- FE ≤ 0xFF
- LS ≤ SAV (active)
- LE ≤ EAV (active)

An embedded unmask code is also implemented for frame/line start and frame/line end codes. Using it, it is possible to compare only the selected unmasked bits with the programmed code. You can therefore select a bit to compare in the embedded code and detect a frame/line start or frame/line end. This means that there can be different codes for the frame/line start and frame/line end with the unmasked bit position remaining the same.

Example

FS = 0xA5

Unmask code for FS = 0x10

In this case the frame start code is embedded in the bit 4 of the frame start code.

15.5.4 Capture modes

This interface supports two types of capture: snapshot (single frame) and continuous grab.

Snapshot mode (single frame)

In this mode, a single frame is captured (CM = ‘1’ in the DCMI_CR register). After the CAPTURE bit is set in DCMI_CR, the interface waits for the detection of a start of frame before sampling the data. The camera interface is automatically disabled (CAPTURE bit cleared in DCMI_CR) after receiving the first complete frame. An interrupt is generated (IT_FRAME) if it is enabled.

In case of an overrun, the frame is lost and the CAPTURE bit is cleared.

Figure 76. Frame capture waveforms in Snapshot mode

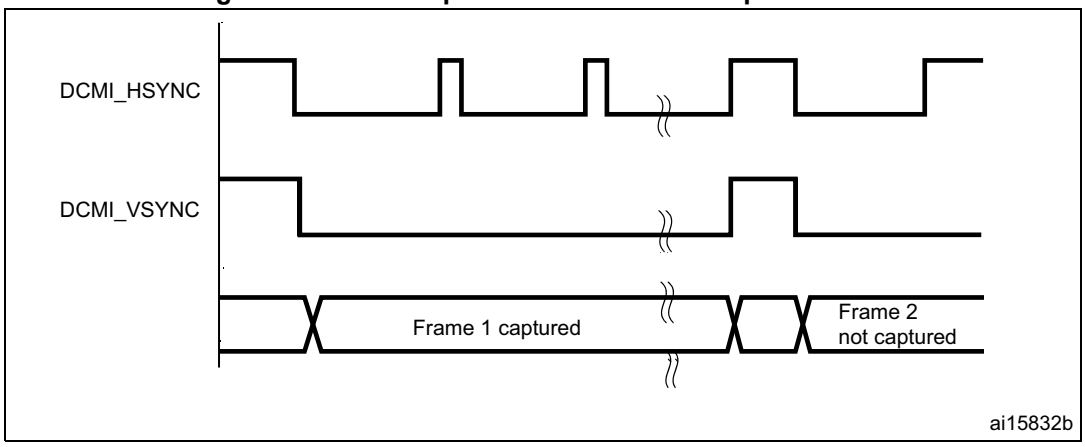

1. Here, the active state of DCMI_HSYNC and DCMI_VSYNC is 1.
2. DCMI_HSYNC and DCMI_VSYNC can change states at the same time.

Continuous grab mode

In this mode (CM bit = ‘0’ in DCMI_CR), once the CAPTURE bit has been set in DCMI_CR, the grabbing process starts on the next VSYNC or embedded frame start depending on the mode. The process continues until the CAPTURE bit is cleared in DCMI_CR. Once the CAPTURE bit has been cleared, the grabbing process continues until the end of the current frame.

Figure 77. Frame capture waveforms in continuous grab mode

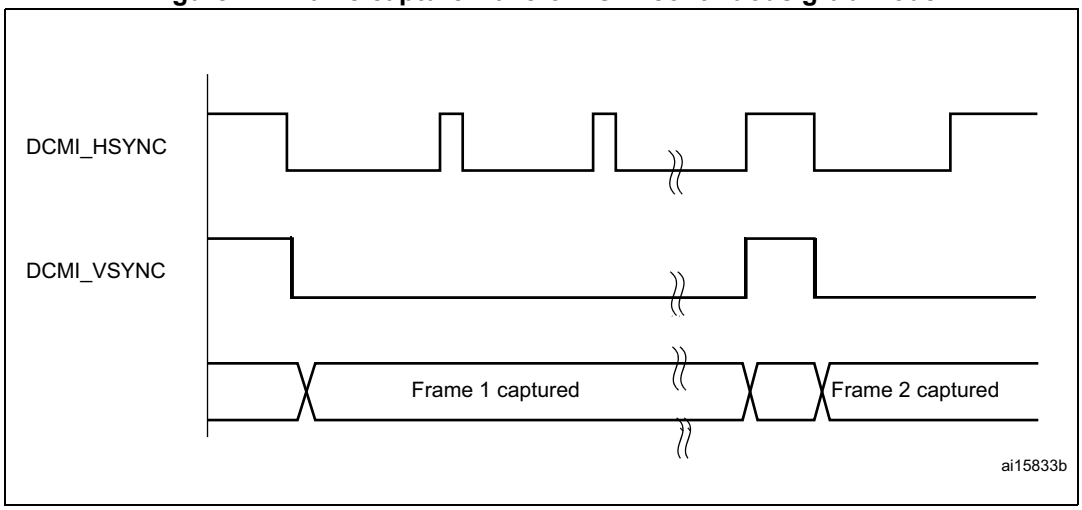

1. Here, the active state of DCMI_HSYNC and DCMI_VSYNC is 1.
2. DCMI_HSYNC and DCMI_VSYNC can change states at the same time.

In continuous grab mode, you can configure the FCRC bits in DCMI_CR to grab all pictures, every second picture or one out of four pictures to decrease the frame capture rate.

Note: In the hardware synchronization mode (ESS = ‘0’ in DCMI_CR), the IT_VSYNC interrupt is generated (if enabled) even when CAPTURE = ‘0’ in DCMI_CR so, to reduce the frame capture rate even further, the IT_VSYNC interrupt can be used to count the number of frames between 2 captures in conjunction with the Snapshot mode. This is not allowed by embedded data synchronization mode.

15.5.5 Crop feature

With the crop feature, the camera interface can select a rectangular window from the received image. The start (upper left corner) coordinates and size (horizontal dimension in number of pixel clocks and vertical dimension in number of lines) are specified using two 32-bit registers (DCMI_CWSTRT and DCMI_CWSIZE). The size of the window is specified in number of pixel clocks (horizontal dimension) and in number of lines (vertical dimension).

Figure 78. Coordinates and size of the window after cropping

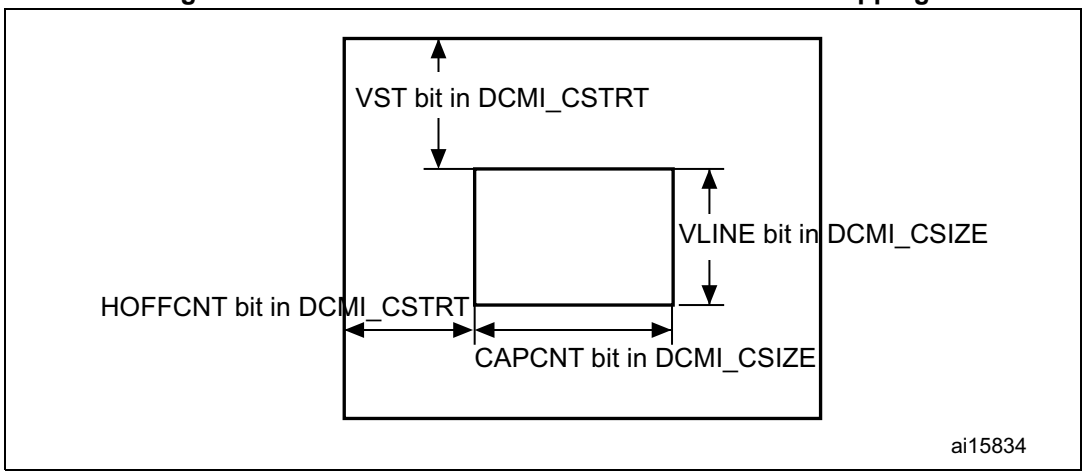

These registers specify the coordinates of the starting point of the capture window as a line number (in the frame, starting from 0) and a number of pixel clocks (on the line, starting from 0), and the size of the window as a line number and a number of pixel clocks. The CAPCNT value can only be a multiple of 4 (two least significant bits are forced to 0) to allow the correct transfer of data through the DMA.

If the VSYNC signal goes active before the number of lines is specified in the DCMI_CWSIZE register, then the capture stops and an IT_FRAME interrupt is generated when enabled.

Figure 79. Data capture waveforms

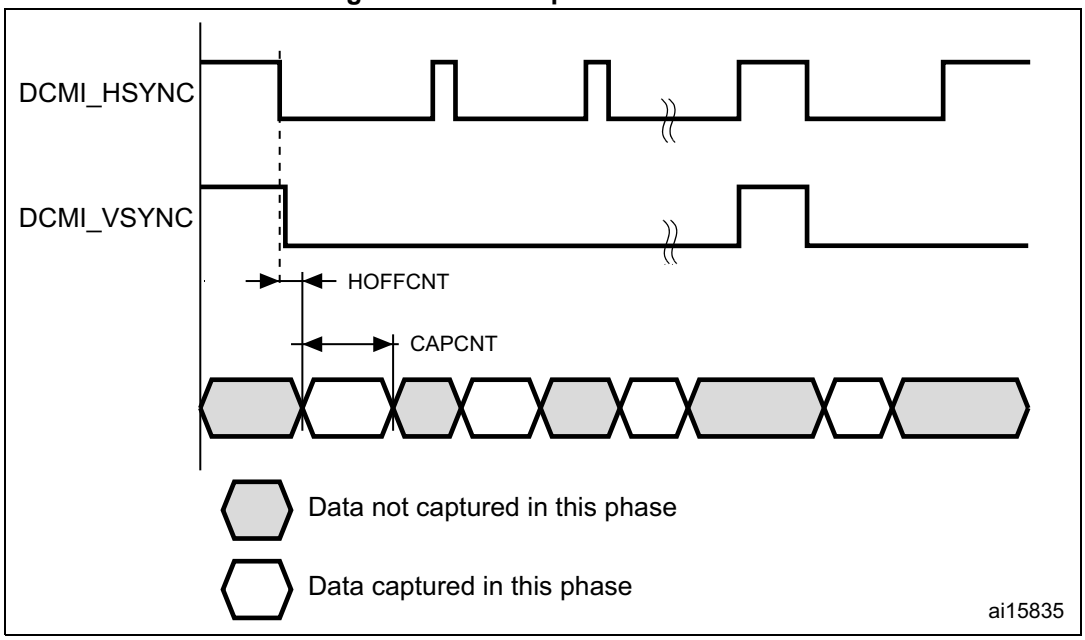

1. Here, the active state of DCMI_HSYNC and DCMI_VSYNC is 1.
2. DCMI_HSYNC and DCMI_VSYNC can change states at the same time.

15.5.6 JPEG format

To allow JPEG image reception, it is necessary to set the JPEG bit in the DCMI_CR register. JPEG images are not stored as lines and frames, so the VSYNC signal is used to start the capture while HSYNC serves as a data enable signal. The number of bytes in a line may not be a multiple of 4, you should therefore be careful when handling this case since a DMA request is generated each time a complete 32-bit word has been constructed from the captured data. When an end of frame is detected and the 32-bit word to be transferred has not been completely received, the remaining data are padded with ‘0s’ and a DMA request is generated.

The crop feature and embedded synchronization codes cannot be used in the JPEG format.

15.5.7 FIFO

A four-word FIFO is implemented to manage data rate transfers on the AHB. The DCMI features a simple FIFO controller with a read pointer incremented each time the camera interface reads from the AHB, and a write pointer incremented each time the camera interface writes to the FIFO. There is no overrun protection to prevent the data from being overwritten if the AHB interface does not sustain the data transfer rate.

In case of overrun or errors in the synchronization signals, the FIFO is reset and the DCMI interface waits for a new start of frame.

15.6 Data format description

15.6.1 Data formats

Three types of data are supported:

- 8-bit progressive video: either monochrome or raw Bayer format
- YCbCr 4:2:2 progressive video
- RGB565 progressive video. A pixel coded in 16 bits (5 bits for blue, 5 bits for red, 6 bits for green) takes two clock cycles to be transferred.

Compressed data: JPEG

For B&W, YCbCr or RGB data, the maximum input size is 2048 × 2048 pixels. No limit in JPEG compressed mode.

For monochrome, RGB & YCbCr, the frame buffer is stored in raster mode. 32-bit words are used. Only the little endian format is supported.

Figure 80. Pixel raster scan order

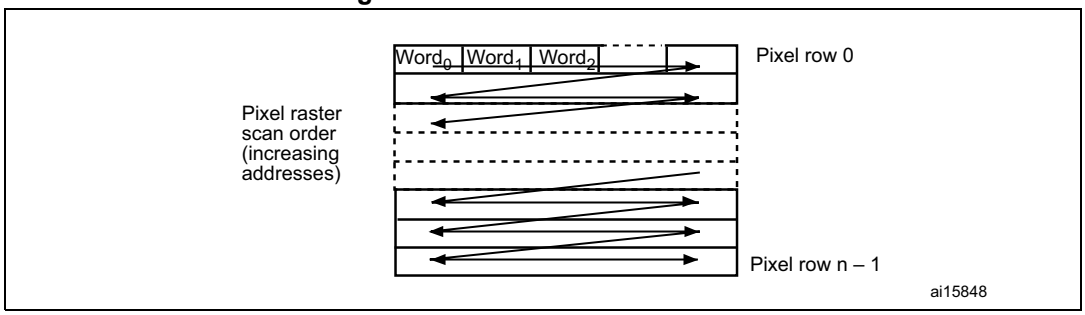

15.6.2 Monochrome format

Characteristics:

- Raster format
- 8 bits per pixel

Table 83 shows how the data are stored.

Table 83. Data storage in monochrome progressive video format

Byte address	31:24	23:16	15:8	7:0
0	n + 3	n + 2	n + 1	n
4	n + 7	n + 6	n + 5	n + 4

15.6.3 RGB format

Characteristics:

- Raster format
- RGB
- Interleaved: one buffer: R, G & B interleaved: BRGBRGBRG, etc.
- Optimized for display output

The RGB planar format is compatible with standard OS frame buffer display formats.
Only 16 BPP (bits per pixel): RGB565 (2 pixels per 32-bit word) is supported.
The 24 BPP (palletized format) and grayscale formats are not supported. Pixels are stored in a raster scan order, that is from top to bottom for pixel rows, and from left to right within a pixel row. Pixel components are R (red), G (green) and B (blue). All components have the same spatial resolution (4:4:4 format). A frame is stored in a single part, with the components interleaved on a pixel basis.

Table 84 shows how the data are stored.

Table 84. Data storage in RGB progressive video format

Byte address	31:27	26:21	20:16	15:11	10:5	4:0
0	Red n + 1	Green n + 1	Blue n + 1	Red n	Green n	Blue n
4	Red n + 4	Green n + 3	Blue n + 3	Red n + 2	Green n + 2	Blue n + 2

15.6.4 YCbCr format

Characteristics:

- Raster format
- YCbCr 4:2:2
- Interleaved: one Buffer: Y, Cb & Cr interleaved: CbYCrYCbYCr, etc.

Pixel components are Y (luminance or “luma”), Cb and Cr (chrominance or “chroma” blue and red). Each component is encoded in 8 bits. Luma and chroma are stored together (interleaved) as shown in *Table 85*.

Table 85. Data storage in YCbCr progressive video format

Byte address	31:24	23:16	15:8	7:0
0	Y n + 1	Cr n	Y n	Cb n
4	Y n + 3	Cr n + 2	Y n + 2	Cb n + 2

15.7 DCMI interrupts

Five interrupts are generated. All interrupts are maskable by software. The global interrupt (IT_DCMI) is the OR of all the individual interrupts. *Table 86* gives the list of all interrupts.

Table 86. DCMI interrupts

Interrupt name	Interrupt event
IT_LINE	Indicates the end of line
IT_FRAME	Indicates the end of frame capture
IT_OVR	indicates the overrun of data reception
IT_VSYNC	Indicates the synchronization frame
IT_ERR	Indicates the detection of an error in the embedded synchronization frame detection
IT_DCMI	Logic OR of the previous interrupts

15.8 DCMI register description

All DCMI registers have to be accessed as 32-bit words, otherwise a bus error occurs.

15.8.1 DCMI control register 1 (DCMI_CR)

Address offset: 0x00

Reset value: 0x0000 0x0000

31	30	29	28	27	26	25	24	23	22	21	20	19	18	17	16	15	14	13	12	11	10	9	8	7	6	5	4	3	2	1	0
Reserved																	ENABLE	Reserved		EDM		FCRC		VSPOL	HSPOL	PCKPOL	ESS	JPEG	CROP	CM	CAPTURE
																	rw			rw	rw	rw	rw	rw	rw	rw	rw	rw	rw	rw	rw

Bit 31:15 Reserved, must be kept at reset value.

Bit 14 **ENABLE:** DCMI enable
0: DCMI disabled
1: DCMI enabled
Note: The DCMI configuration registers should be programmed correctly before enabling this Bit

Bit 13: 12 Reserved, must be kept at reset value.

Bits 11:10 **EDM[1:0]:** Extended data mode

00: Interface captures 8-bit data on every pixel clock
01: Interface captures 10-bit data on every pixel clock
10: Interface captures 12-bit data on every pixel clock
11: Interface captures 14-bit data on every pixel clock

Bits 9:8 **FCRC[1:0]:** Frame capture rate control

These bits define the frequency of frame capture. They are meaningful only in Continuous grab mode. They are ignored in snapshot mode.

00: All frames are captured
01: Every alternate frame captured (50% bandwidth reduction)
10: One frame in 4 frames captured (75% bandwidth reduction)
11: reserved

Bit 7 **VSPOL:** Vertical synchronization polarity

This bit indicates the level on the VSYNC pin when the data are not valid on the parallel interface.

0: VSYNC active low
1: VSYNC active high

Bit 6 **HSPOL:** Horizontal synchronization polarity

This bit indicates the level on the HSYNC pin when the data are not valid on the parallel interface.

0: HSYNC active low
1: HSYNC active high

Bit 5 **PCKPOL:** Pixel clock polarity

This bit configures the capture edge of the pixel clock

0: Falling edge active.
1: Rising edge active.

Bit 4 **ESS:** Embedded synchronization select

0: Hardware synchronization data capture (frame/line start/stop) is synchronized with the HSYNC/VSYNC signals.
1: Embedded synchronization data capture is synchronized with synchronization codes embedded in the data flow.

Note: Valid only for 8-bit parallel data. HSPOL/VSPOL are ignored when the ESS bit is set.

This bit is disabled in JPEG mode.

Bit 3 **JPEG:** JPEG format

0: Uncompressed video format
1: This bit is used for JPEG data transfers. The HSYNC signal is used as data enable. The crop and embedded synchronization features (ESS bit) cannot be used in this mode.

Bits 2 **CROP:** Crop feature

0: The full image is captured. In this case the total number of bytes in an image frame should be a multiple of 4
1: Only the data inside the window specified by the crop register will be captured. If the size of the crop window exceeds the picture size, then only the picture size is captured.

Bit 1 **CM:** Capture mode

0: Continuous grab mode - The received data are transferred into the destination memory through the DMA. The buffer location and mode (linear or circular buffer) is controlled through the system DMA.

1: Snapshot mode (single frame) - Once activated, the interface waits for the start of frame and then transfers a single frame through the DMA. At the end of the frame, the CAPTURE bit is automatically reset.

Bit 0 **CAPTURE:** Capture enable

0: Capture disabled.

1: Capture enabled.

The camera interface waits for the first start of frame, then a DMA request is generated to transfer the received data into the destination memory.

In snapshot mode, the CAPTURE bit is automatically cleared at the end of the 1st frame received.

In continuous grab mode, if the software clears this bit while a capture is ongoing, the bit will be effectively cleared after the frame end.

Note: The DMA controller and all DCMI configuration registers should be programmed correctly before enabling this bit.

15.8.2 DCMI status register (DCMI_SR)

Address offset: 0x04

Reset value: 0x0000 0x0000

31	30	29	28	27	26	25	24	23	22	21	20	19	18	17	16	15	14	13	12	11	10	9	8	7	6	5	4	3	2	1	0
Reserved																													FNE	VSYNC	HSYNC
																													r	r	r

Bits 31:3 Reserved, must be kept at reset value.

Bit 2 **FNE:** FIFO not empty

This bit gives the status of the FIFO

1: FIFO contains valid data

0: FIFO empty

Bit 1 **VSYNC**

This bit gives the state of the VSYNC pin with the correct programmed polarity. When embedded synchronization codes are used, the meaning of this bit is the following:

0: active frame

1: synchronization between frames

In case of embedded synchronization, this bit is meaningful only if the CAPTURE bit in DCMI_CR is set.

Bit 0 **HSYNC**

This bit gives the state of the HSYNC pin with the correct programmed polarity. When embedded synchronization codes are used, the meaning of this bit is the following:

0: active line

1: synchronization between lines

In case of embedded synchronization, this bit is meaningful only if the CAPTURE bit in DCMI_CR is set.

15.8.3 DCMI raw interrupt status register (DCMI_RIS)

Address offset: 0x08

Reset value: 0x0000 0x0000

31	30	29	28	27	26	25	24	23	22	21	20	19	18	17	16	15	14	13	12	11	10	9	8	7	6	5	4	3	2	1	0
Reserved																											LINE_RIS	VSYNC_RIS	ERR_RIS	OVR_RIS	FRAME_RIS
																											r	r	r	r	r

DCMI_RIS gives the raw interrupt status and is accessible in read only. When read, this register returns the status of the corresponding interrupt before masking with the DCMI_IER register value.

Bits 31:5 Reserved, must be kept at reset value.

Bit 4 **LINE_RIS:** Line raw interrupt status

This bit gets set when the HSYNC signal changes from the inactive state to the active state. It goes high even if the line is not valid.

In the case of embedded synchronization, this bit is set only if the CAPTURE bit in DCMI_CR is set.

It is cleared by writing a ‘1’ to the LINE_ISC bit in DCMI_ICR.

Bit 3 **VSYNC_RIS:** VSYNC raw interrupt status

This bit is set when the VSYNC signal changes from the inactive state to the active state.

In the case of embedded synchronization, this bit is set only if the CAPTURE bit is set in DCMI_CR.

It is cleared by writing a ‘1’ to the VSYNC_ISC bit in DCMI_ICR.

Bit 2 **ERR_RIS:** Synchronization error raw interrupt status

0: No synchronization error detected

1: Embedded synchronization characters are not received in the correct order.

This bit is valid only in the embedded synchronization mode. It is cleared by writing a ‘1’ to the ERR_ISC bit in DCMI_ICR.

Note: This bit is available only in embedded synchronization mode.

Bit 1 **OVR_RIS:** Overrun raw interrupt status

0: No data buffer overrun occurred

1: A data buffer overrun occurred and the data FIFO is corrupted.

This bit is cleared by writing a ‘1’ to the OVR_ISC bit in DCMI_ICR.

Bit 0 **FRAME_RIS:** Capture complete raw interrupt status

0: No new capture

1: A frame has been captured.

This bit is set when a frame or window has been captured.

In case of a cropped window, this bit is set at the end of line of the last line in the crop. It is set even if the captured frame is empty (e.g. window cropped outside the frame).

This bit is cleared by writing a ‘1’ to the FRAME_ISC bit in DCMI_ICR.

15.8.4 DCMI interrupt enable register (DCMI_IER)

Address offset: 0x0C

Reset value: 0x0000 0x0000

31	30	29	28	27	26	25	24	23	22	21	20	19	18	17	16	15	14	13	12	11	10	9	8	7	6	5	4	3	2	1	0
Reserved																											LINE_IE	VSYNC_IE	ERR_IE	OVR_IE	FRAME_IE
																											rw	rw	rw	rw	rw

The DCMI_IER register is used to enable interrupts. When one of the DCMI_IER bits is set, the corresponding interrupt is enabled. This register is accessible in both read and write.

Bits 31:5 Reserved, must be kept at reset value.

Bit 4 **LINE_IE:** Line interrupt enable

0: No interrupt generation when the line is received
1: An Interrupt is generated when a line has been completely received

Bit 3 **VSYNC_IE:** VSYNC interrupt enable

0: No interrupt generation
1: An interrupt is generated on each VSYNC transition from the inactive to the active state
The active state of the VSYNC signal is defined by the VSPOL bit.

Bit 2 **ERR_IE:** Synchronization error interrupt enable

0: No interrupt generation
1: An interrupt is generated if the embedded synchronization codes are not received in the correct order.

Note: This bit is available only in embedded synchronization mode.

Bit 1 **OVR_IE:** Overrun interrupt enable

0: No interrupt generation
1: An interrupt is generated if the DMA was not able to transfer the last data before new data (32-bit) are received.

Bit 0 **FRAME_IE:** Capture complete interrupt enable

0: No interrupt generation
1: An interrupt is generated at the end of each received frame/crop window (in crop mode).

15.8.5 DCMI masked interrupt status register (DCMI_MIS)

This DCMI_MIS register is a read-only register. When read, it returns the current masked status value (depending on the value in DCMI_IER) of the corresponding interrupt. A bit in this register is set if the corresponding enable bit in DCMI_IER is set and the corresponding bit in DCMI_RIS is set.

Address offset: 0x10

Reset value: 0x0000

31	30	29	28	27	26	25	24	23	22	21	20	19	18	17	16	15	14	13	12	11	10	9	8	7	6	5	4	3	2	1	0
Reserved																											LINE_MIS	VSYNC_MIS	ERR_MIS	OVR_MIS	FRAME_MIS
																											r	r	r	r	r

Bits 31:5 Reserved, must be kept at reset value.

Bit 4 **LINE_MIS:** Line masked interrupt status

This bit gives the status of the masked line interrupt

0: No interrupt generation when the line is received

1: An Interrupt is generated when a line has been completely received and the LINE_IE bit is set in DCMI_IER.

Bit 3 **VSYNC_MIS:** VSYNC masked interrupt status

This bit gives the status of the masked VSYNC interrupt

0: No interrupt is generated on VSYNC transitions

1: An interrupt is generated on each VSYNC transition from the inactive to the active state and the VSYNC_IE bit is set in DCMI_IER.

The active state of the VSYNC signal is defined by the VSPOL bit.

Bit 2 **ERR_MIS:** Synchronization error masked interrupt status

This bit gives the status of the masked synchronization error interrupt

0: No interrupt is generated on a synchronization error

1: An interrupt is generated if the embedded synchronization codes are not received in the correct order and the ERR_IE bit in DCMI_IER is set.

Note: This bit is available only in embedded synchronization mode.

Bit 1 **OVR_MIS:** Overrun masked interrupt status

This bit gives the status of the masked overflow interrupt

0: No interrupt is generated on overrun

1: An interrupt is generated if the DMA was not able to transfer the last data before new data (32-bit) are received and the OVR_IE bit is set in DCMI_IER.

Bit 0 **FRAME_MIS:** Capture complete masked interrupt status

This bit gives the status of the masked capture complete interrupt

0: No interrupt is generated after a complete capture

1: An interrupt is generated at the end of each received frame/crop window (in crop mode) and the FRAME_IE bit is set in DCMI_IER.

15.8.6 DCMI interrupt clear register (DCMI_ICR)

Address offset: 0x14

Reset value: 0x0000 0x0000

31	30	29	28	27	26	25	24	23	22	21	20	19	18	17	16	15	14	13	12	11	10	9	8	7	6	5	4	3	2	1	0
Reserved																											LINE_ISC	VSYNC_ISC	ERR_ISC	OVR_ISC	FRAME_ISC
																											w	w	w	w	w

The DCMI_ICR register is write-only. Writing a ‘1’ into a bit of this register clears the corresponding bit in the DCMI_RIS and DCMI_MIS registers. Writing a ‘0’ has no effect.

Bits 15:5 Reserved, must be kept at reset value.

Bit 4 **LINE_ISC:** line interrupt status clear
Writing a ‘1’ into this bit clears LINE_RIS in the DCMI_RIS register

Bit 3 **VSYNC_ISC:** Vertical synch interrupt status clear
Writing a ‘1’ into this bit clears the VSYNC_RIS bit in DCMI_RIS

Bit 2 **ERR_ISC:** Synchronization error interrupt status clear
Writing a ‘1’ into this bit clears the ERR_RIS bit in DCMI_RIS
Note: This bit is available only in embedded synchronization mode.

Bit 1 **OVR_ISC:** Overrun interrupt status clear
Writing a ‘1’ into this bit clears the OVR_RIS bit in DCMI_RIS

Bits 0 **FRAME_ISC:** Capture complete interrupt status clear
Writing a ‘1’ into this bit clears the FRAME_RIS bit in DCMI_RIS

15.8.7 DCMI embedded synchronization code register (DCMI_ESCR)

Address offset: 0x18

Reset value: 0x0000 0x0000

31	30	29	28	27	26	25	24	23	22	21	20	19	18	17	16	15	14	13	12	11	10	9	8	7	6	5	4	3	2	1	0
FEC								LEC								LSC								FSC							
rw	rw	rw	rw	rw	rw	rw	rw	rw	rw	rw	rw	rw	rw	rw	rw	rw	rw	rw	rw	rw	rw	rw	rw	rw	rw	rw	rw	rw	rw	rw	rw

Bits 31:24 **FEC:** Frame end delimiter code

This byte specifies the code of the frame end delimiter. The code consists of 4 bytes in the form of 0xFF, 0x00, 0x00, FEC.

If FEC is programmed to 0xFF, all the unused codes (0xFF0000XY) are interpreted as frame end delimiters.

Bits 23:16 **LEC:** Line end delimiter code

This byte specifies the code of the line end delimiter. The code consists of 4 bytes in the form of 0xFF, 0x00, 0x00, LEC.

Bits 15:8 **LSC:** Line start delimiter code

This byte specifies the code of the line start delimiter. The code consists of 4 bytes in the form of 0xFF, 0x00, 0x00, LSC.

Bits 7:0 **FSC:** Frame start delimiter code

This byte specifies the code of the frame start delimiter. The code consists of 4 bytes in the form of 0xFF, 0x00, 0x00, FSC.

If FSC is programmed to 0xFF, no frame start delimiter is detected. But, the 1st occurrence of LSC after an FEC code will be interpreted as a start of frame delimiter.

15.8.8 DCMI embedded synchronization unmask register (DCMI_ESUR)

Address offset: 0x1C

Reset value: 0x0000 0x0000

31	30	29	28	27	26	25	24	23	22	21	20	19	18	17	16	15	14	13	12	11	10	9	8	7	6	5	4	3	2	1	0
FEU								LEU								LSU								FSU							
rw	rw	rw	rw	rw	rw	rw	rw	rw	rw	rw	rw	rw	rw	rw	rw	rw	rw	rw	rw	rw	rw	rw	rw	rw	rw	rw	rw	rw	rw	rw	rw

Bits 31:24 **FEU:** Frame end delimiter unmask

This byte specifies the mask to be applied to the code of the frame end delimiter.

0: The corresponding bit in the FEC byte in DCMI_ESCR is masked while comparing the frame end delimiter with the received data.

1: The corresponding bit in the FEC byte in DCMI_ESCR is compared while comparing the frame end delimiter with the received data

Bits 23:16 **LEU:** Line end delimiter unmask

This byte specifies the mask to be applied to the code of the line end delimiter.

0: The corresponding bit in the LEC byte in DCMI_ESCR is masked while comparing the line end delimiter with the received data

1: The corresponding bit in the LEC byte in DCMI_ESCR is compared while comparing the line end delimiter with the received data

Bits 15:8 **LSU:** Line start delimiter unmask

This byte specifies the mask to be applied to the code of the line start delimiter.

0: The corresponding bit in the LSC byte in DCMI_ESCR is masked while comparing the line start delimiter with the received data

1: The corresponding bit in the LSC byte in DCMI_ESCR is compared while comparing the line start delimiter with the received data

Bits 7:0 **FSU:** Frame start delimiter unmask

This byte specifies the mask to be applied to the code of the frame start delimiter.

0: The corresponding bit in the FSC byte in DCMI_ESCR is masked while comparing the frame start delimiter with the received data

1: The corresponding bit in the FSC byte in DCMI_ESCR is compared while comparing the frame start delimiter with the received data

15.8.9 DCMI crop window start (DCMI_CWSTRT)

Address offset: 0x20

Reset value: 0x0000 0x0000

31	30	29	28	27	26	25	24	23	22	21	20	19	18	17	16	15	14	13	12	11	10	9	8	7	6	5	4	3	2	1	0
Reserved			VST[12:0													Reserv ed		HOFFCNT[13:0]													
			rw	rw	rw	rw	rw	rw	rw	rw	rw	rw	rw	rw	rw			rw	rw	rw	rw	rw	rw	rw	rw	rw	rw	rw	rw	rw	rw

Bits 31:29 Reserved, must be kept at reset value.

Bits 28:16 **VST[12:0]:** Vertical start line count

The image capture starts with this line number. Previous line data are ignored.
0x0000 => line 1
0x0001 => line 2
0x0002 => line 3
....

Bits 15:14 Reserved, must be kept at reset value.

Bit 13:0 **HOFFCNT[13:0]:** Horizontal offset count

This value gives the number of pixel clocks to count before starting a capture.

15.8.10 DCMI crop window size (DCMI_CWSIZE)

Address offset: 0x24

Reset value: 0x0000 0x0000

31	30	29	28	27	26	25	24	23	22	21	20	19	18	17	16	15	14	13	12	11	10	9	8	7	6	5	4	3	2	1	0
Reserved		VLINE13:0]														Reserved		CAPCNT[13:0]													
		rw	rw	rw	rw	rw	rw	rw	rw	rw	rw	rw	rw	rw	rw			rw	rw	rw	rw	rw	rw	rw	rw	rw	rw	rw	rw	rw	rw

Bits 31:30 Reserved, must be kept at reset value.

Bitst 29:16 **VLINE[13:0]:** Vertical line count

This value gives the number of lines to be captured from the starting point.
0x0000 => 1 line
0x0001 => 2 lines
0x0002 => 3 lines
....

Bits 15:14 Reserved, must be kept at reset value.

Bits 13:0 **CAPCNT[13:0]:** Capture count

This value gives the number of pixel clocks to be captured from the starting point on the same line. It value should corresponds to word-aligned data for different widths of parallel interfaces.
0x0000 => 1 pixel
0x0001 => 2 pixels
0x0002 => 3 pixels
....

15.8.11 DCMI data register (DCMI_DR)

Address offset: 0x28

Reset value: 0x0000 0x0000

31	30	29	28	27	26	25	24	23	22	21	20	19	18	17	16	15	14	13	12	11	10	9	8	7	6	5	4	3	2	1	0
Byte3								Byte2								Byte1								Byte0							
r	r	r	r	r	r	r	r	r	r	r	r	r	r	r	r	r	r	r	r	r	r	r	r	r	r	r	r	r	r	r	r

Bits 31:24 Data byte 3

Bits 23:16 Data byte 2

Bits 15:8 Data byte 1

Bits 7:0 Data byte 0

The digital camera Interface packages all the received data in 32-bit format before requesting a DMA transfer. A 4-word deep FIFO is available to leave enough time for DMA transfers and avoid DMA overrun conditions.

15.8.12 DCMI register map

Table 87 summarizes the DCMI registers.

Table 87. DCMI register map and reset values

Offset	Register	31	30	29	28	27	26	25	24	23	22	21	20	19	18	17	16	15	14	13	12	11	10	9	8	7	6	5	4	3	2	1	0
0x00	DCMI_CR	Reserved																	ENABLE	Reserved		EDM		FCRC		VSPOL	HSPOL	PCKPOL	ESS	JPEG	CROP	CM	CAPTURE
	Reset value																		0			0	0	0	0	0	0	0	0	0	0	0	0
0x04	DCMI_SR	Reserved																													FNE	VSYNC	HSYNC
	Reset value																														0	0	0
0x08	DCMI_RIS	Reserved																											LINE_RIS	VSYNC_RIS	ERR_RIS	OVR_RIS	FRAME_RIS
	Reset value																												0	0	0	0	0
0x0C	DCMI_IER	Reserved																											LINE_IE	VSYNC_IE	ERR_IE	OVR_IE	FRAME_IE
	Reset value																												0	0	0	0	0
0x10	DCMI_MIS	Reserved																											LINE_MIS	VSYNC_MIS	ERR_MIS	OVR_MIS	FRAME_MIS
	Reset value																												0	0	0	0	0

Table 87. DCMI register map and reset values (continued)

Offset	Register	31	30	29	28	27	26	25	24	23	22	21	20	19	18	17	16	15	14	13	12	11	10	9	8	7	6	5	4	3	2	1	0
0x14	DCMI_ICR	Reserved																											LINE_ISC	VSYNC_ISC	ERR_ISC	OVR_ISC	FRAME_ISC
	Reset value																												0	0	0	0	0
0x18	DCMI_ESCR	FEC								LEC								LSC								FSC							
	Reset value	0	0	0	0	0	0	0	0	0	0	0	0	0	0	0	0	0	0	0	0	0	0	0	0	0	0	0	0	0	0	0	0
0x1C	DCMI_ESUR	FEU								LEU								LSU								FSU							
	Reset value	0	0	0	0	0	0	0	0	0	0	0	0	0	0	0	0	0	0	0	0	0	0	0	0	0	0	0	0	0	0	0	0
0x20	DCMI_CWSTRT	Reserved			VST[12:0													Reserved		HOFFCNT[13:0]													
	Reset value				0	0	0	0	0	0	0	0	0	0	0	0	0			0	0	0	0	0	0	0	0	0	0	0	0	0	0
0x24	DCMI_CWSIZE	Reserved			VLINE13:0]													Reserved		CAPCNT[13:0]													
	Reset value			0	0	0	0	0	0	0	0	0	0	0	0	0	0			0	0	0	0	0	0	0	0	0	0	0	0	0	0
0x28	DCMI_DR	Byte3								Byte2								Byte1								Byte0							
	Reset value	0	0	0	0	0	0	0	0	0	0	0	0	0	0	0	0	0	0	0	0	0	0	0	0	0	0	0	0	0	0	0	0

Refer to *Section 2.3: Memory map* for the register boundary addresses.

16 LCD-TFT controller (LTDC)

This section applies only to STM32F429xx/439xx devices.

16.1 Introduction

The LCD-TFT (Liquid Crystal Display - Thin Film Transistor) display controller provides a parallel digital RGB (Red, Green, Blue) and signals for horizontal, vertical synchronisation, Pixel Clock and Data Enable as output to interface directly to a variety of LCD and TFT panels.

16.2 LTDC main features

- 24-bit RGB Parallel Pixel Output; 8 bits-per-pixel (RGB888)
- 2 display layers with dedicated FIFO (64x32-bit)
- Color Look-Up Table (CLUT) up to 256 color (256x24-bit) per layer
- Supports up to XGA (1024x768) resolution
- Programmable timings for different display panels
- Programmable Background color
- Programmable polarity for HSync, VSync and Data Enable
- Up to 8 Input color formats selectable per layer
  - ARGB8888
  - RGB888
  - RGB565
  - ARGB1555
  - ARGB4444
  - L8 (8-bit Luminance or CLUT)
  - AL44 (4-bit alpha + 4-bit luminance)
  - AL88 (8-bit alpha + 8-bit luminance)
- Pseudo-random dithering output for low bits per channel
  - Dither width 2-bits for Red, Green, Blue
- Flexible blending between two layers using alpha value (per pixel or constant)
- Color Keying (transparency color)
- Programmable Window position and size
- Supports thin film transistor (TFT) color displays
- AHB master interface with burst of 16 words
- Up to 4 programmable interrupt events

16.3 LTDC functional description

16.3.1 LTDC block diagram

The block diagram of the LTDC is shown in *Figure 81: LTDC block diagram*.

Figure 81. LTDC block diagram

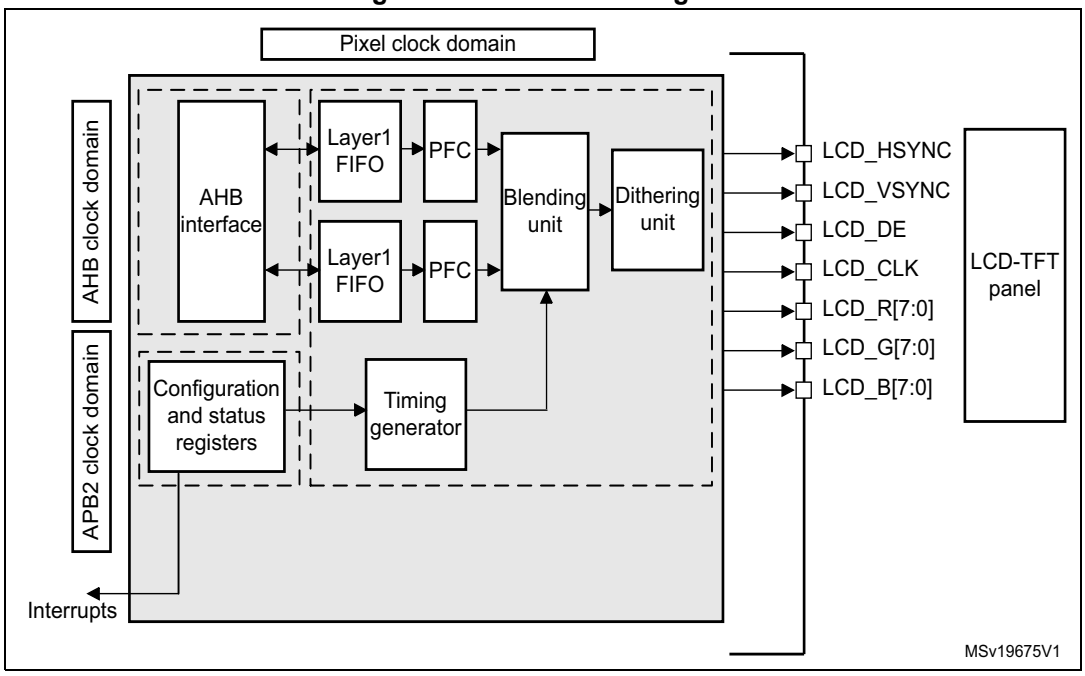

Layer FIFO: One FIFO 64x32 bit per layer.

PFC: Pixel Format Convertor performing the pixel format conversion from the selected input pixel format of a layer to words.

AHB interface: For data transfer from memories to the FIFO.

Blending, Dithering unit and Timings Generator: Refer to *Section 16.4.1* and *Section 16.4.2*.

16.3.2 LTDC reset and clocks

The LCD-TFT controller peripheral uses 3 clock domains:

- The AHB clock domain (HCLK) is used for data transfer from the memories to the Layer FIFO and frame buffer configuration register
- The APB2 clock domain (PCLK2) is used for global configuration register and interrupt registers
- The Pixel Clock domain (LCD_CLK) is used to generate LCD-TFT interface signals, pixel data generation and layer configuration. The LCD_CLK output should be configured following the panel requirements. The LCD_CLK is configured through the PLLSAI (refer to RCC section).

Table 88 summarizes the clock domain for each register.

Table 88. LTDC registers versus clock domain

LTDC registers	Clock domain
LTDC_LxCR	HCLK
LTDC_LxCFBAR	
LTDC_LxCFBLR	
LTDC_LxCFBLNR	
LTDC_SRCR	PCLK2
LTDC_IER	
LTDC_ISR	
LTDC_ICR	
LTDC_SSCR	Pixel Clock (LCD_CLK)
LTDC_BPCR	
LTDC_AWCR	
LTDC_TWCR	
LTDC_GCR	
LTDC_BCCR	
LTDC_LIPCR	
LTDC_CPSR	
LTDC_CDSR	
LTDC_LxWHPCR	
LTDC_LxWVPCR	
LTDC_LxCKCR	
LTDC_LxPFCR	
LTDC_LxCACR	
LTDC_LxDCCR	
LTDC_LxBFCR	
LTDC_LxCLUTWR	

Care must be taken when accessing the LTDC registers since the APB2 bus is stalling when the following operations are ongoing:

- Register write access and update for 6 xPCKL2 period + 5x LCD_CLK period (5x HCLK period for register on AHB clock domain)
- Register read access for 7xPCKL2 period + 5x LCD_CLK period (5x HCLK period for register on AHB clock domain).

For registers on PCLK2 clock domain, APB2 bus is stalling during the register write access for 6 xPCKL2 period and 7xPCKL2 period for read access.

The LCD controller can be reset by setting the corresponding bit in the RCC_APB2RSTR register. It resets the three clock domains.

16.3.3 LCD-TFT pins and signal interface

The Table below summarizes the LTDC signal interface:

Table 89. LCD-TFT pins and signal interface

LCD-TFT signals	I/O	Description
LCD_CLK	O	Clock Output
LCD_HSYNC	O	Horizontal Synchronization
LCD_VSYNC	O	Vertical Synchronization
LCD_DE	O	Not Data Enable
LCD_R[7:0]	O	Data: 8-bit Red data
LCD_G[7:0]	O	Data: 8-bit Green data
LCD_B[7:0]	O	Data: 8-bit Blue data

The LCD-TFT controller pins must be configured by the user application. The unused pins can be used for other purposes.

For LTDC outputs up to 24-bit (RGB888), if less than 8bpp are used to output for example RGB565 or RGB666 to interface on 16b-bit or 18-bit displays, the RGB display data lines must be connected to the MSB of the LCD-TFT controller RGB data lines. As an example, in the case of an LCD-TFT controller interfacing with a RGB565 16-bit display, the LCD display R[4:0], G[5:0] and B[4:0] data lines pins must be connected to LCD-TFT controller LCD_R[7:3], LCD_G[7:2] and LCD_B[7:3].

16.4 LTDC programmable parameters

The LCD-TFT controller provides flexible configurable parameters. It can be enabled or disabled through the **LTDC_GCR** register.

16.4.1 LTDC Global configuration parameters

Synchronous Timings:

Figure 82 presents the configurable timing parameters generated by the Synchronous Timings Generator block presented in the block diagram *Figure 81*. It generates the Horizontal and Vertical Synchronization timings panel signals, the Pixel Clock and the Data Enable signals.

Figure 82. LCD-TFT Synchronous timings

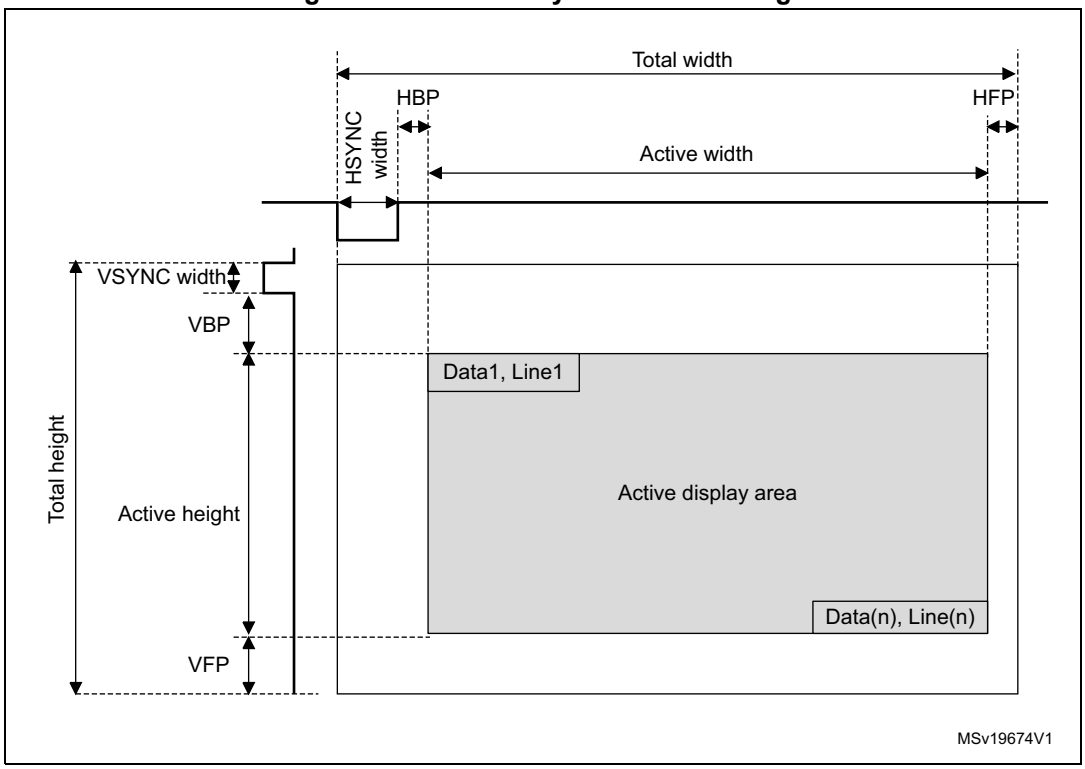

Note: The HBP and HFP are respectively the Horizontal back porch and front porch period.

The VBP and the VFP are respectively the Vertical back porch and front porch period.

The LCD-TFT programmable synchronous timings are:

- HSYNC and VSYNC Width: Horizontal and Vertical Synchronization width configured by programming a value of ***HSYNC Width - 1*** and ***VSYNC Width - 1*** in the **LTDC_SSCR** register.
- HBP and VBP: Horizontal and Vertical Synchronization back porch width configured by programming the accumulated value ***HSYNC Width + HBP - 1*** and the accumulated value ***VSYNC Width + VBP - 1*** in the **LTDC_BPCR** register.
- Active Width and Active Height: The Active Width and Active Height are configured by programming the accumulated value ***HSYNC Width + HBP + Active Width - 1*** and the accumulated value ***VSYNC Width + VBP + Active Height - 1*** in the **LTDC_AWCR** register (only up to 1024x768 is supported).
- Total Width: The Total width is configured by programming the accumulated value ***HSYNC Width + HBP + Active Width + HFP - 1*** in the **LTDC_TWCR** register. The HFP is the Horizontal front porch period.
- Total Height: The Total Height is configured by programming the accumulated value ***VSYNC Height + VBP + Active Height + VFP - 1*** in the **LTDC_TWCR** register. The VFP is the Vertical front porch period.

Note: When the LTDC is enabled, the timings generated start with X/Y=0/0 position as the first horizontal synchronization pixel in the vertical synchronization area and following the back porch, active data display area and the front porch.

When the LTDC is disabled, the timing generator block is reset to X=*Total Width - 1*, Y=*Total Height - 1* and held the last pixel before the vertical synchronization phase and the FIFO are flushed. Therefore only blanking data is output continuously.

Example of Synchronous timings configuration

TFT-LCD timings (should be extracted from Panel datasheet):

- Horizontal and Vertical Synchronization width: 0x8 pixels and 0x4 lines
- Horizontal and Vertical back porch: 0x7 pixels and 0x2 lines
- Active Width and Active Height: 0x280 pixels, 0x1E0 lines (640x480)
- Horizontal front porch: 0x6 pixels
- Vertical front porch: 0x2 lines

The programmed values in the LTDC Timings registers will be:

- **LTDC_SSCR** register: to be programmed to 0x00070003. (HSW[11:0] is 0x7 and VSH[10:0] is 0x3)
- **LTDC_BPCR** register: to be programmed to 0x000E0005. (AHBP[11:0] is 0xE(0x8 + 0x6) and AVBP[10:0] is 0x5(0x4 + 0x1))
- **LTDC_AWCR** register: to be programmed to 0x028E01E5. (AAW[11:0] is 0x28E(0x8 +0x7 +0x27F) and AAH[10:0] is 0x1E5(0x4 +0x2 + 0x1DF)
- **LTDC_TWCR** register: to be programmed to 0x00000294. (TOTALW[11:0] is 0x294(0x8 +0x7 +0x280 + 0x5)
- **LTDC_THCR** register: to be programmed to 0x000001E7. (TOTALH[10:0] is 0x1E7(0x4 +0x2 + 0x1E0 + 1)

Programmable polarity

The Horizontal and Vertical Synchronization, Data Enable and Pixel Clock output signals polarity can be programmed to active high or active low through the **LTDC_GCR** register.

Background Color

A constant background color (RGB888) can programmed through the **LTDC_BCCR** register. It is used for blending with the bottom layer.

Dithering

The Dithering pseudo-random technique using an LFSR is used to add a small random value (threshold) to each pixel color channel (R, G or B) value, thus rounding up the MSB in some cases when displaying a 24-bit data on 18-bit display. Thus the Dithering technique is used to round data which is different from one frame to the other.

The Dither pseudo-random technique is the same as comparing LSBs against a threshold value and adding a 1 to the MSB part only, if the LSB part is >= the threshold. The LSBs are typically dropped once dithering was applied.

The width of the added pseudo-random value is 2 bits for each color channel; 2 bits for Red, 2 bits for Green and 2 bits for Blue.

Once the LCD-TFT controller is enabled, the LFSR starts running with the first active pixel and it is kept running even during blanking periods and when dithering is switched off. If the LTDC is disabled, the LFSR is reset.

The Dithering can be switched On and Off on the fly through the **LTDC_GCR** register.

Reload Shadow registers

Some configuration registers are shadowed. The shadow registers values can be reloaded immediately to the active registers when writing to these registers or at the beginning of the vertical blanking period following the configuration in the **LTDC_SRCR** register. If the immediate reload configuration is selected, the reload should be only activated when all new registers have been written.

The shadow registers should not be modified again before the reload has been done. Reading from the shadow registers returns the actual active value. The new written value can only be read after the reload has taken place.

A register reload interrupt can be generated if enabled in the **LTDC_IER** register.

The shadowed registers are all the Layer 1 and Layer 2 registers except the **LTDC_LxCLUTWR** register.

Interrupt generation event

Refer to *Section 16.5: LTDC interrupts* for interrupt configuration.

16.4.2 Layer programmable parameters

Up to two layers can be enabled, disabled and configured separately. The layer display order is fixed and it is bottom up. If two layers are enabled, the Layer2 is the top displayed window.

Windowing

Every layer can be positioned and resized and it must be inside the Active Display area.

The window position and size are configured through the top-left and bottom-right X/Y positions and the Internal timing generator which includes the synchronous, back porch size and the active data area. Refer to **LTDC_LxWHPCR** and **LTDC_WVPCR** registers.

The programmable layer position and size defines the first/last visible pixel of a line and the first/last visible line in the window. It allows to display either the full image frame or only a part of the image frame. Refer to *Figure 83*

- The first and the last visible pixel in the layer are set by configuring the WHSTPOS[11:0] and WHSPPOS[11:0] in the **LTDC_LxWHPCR** register.
- The first and the last visible lines in the layer are set by configuring the WVSTPOS[10:0] and WVSPPOS[10:0] in the **LTDC_LxWVPCR** register.

Figure 83. Layer window programmable parameters:

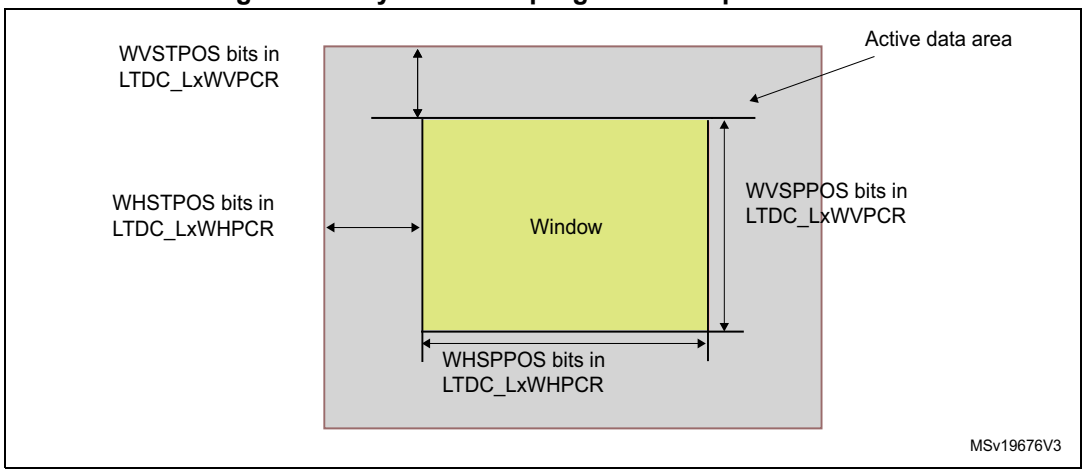

Pixel input Format

The programmable pixel format is used for the data stored in the frame buffer of a layer.

Up to 8 input pixel formats can be configured for every layer through the **LTDC_LxPFCR** register

The pixel data is read from the frame buffer and then transformed to the internal 8888 (ARGB) format as follows:

- Components which have a width of less than 8 bits get expanded to 8 bits by bit replication. The selected bit range is concatenated multiple times until it is longer than 8 bits. Of the resulting vector, the 8 MSB bits are chosen. Example: 5 bits of an RGB565 red channel become (bit positions): 43210432 (the 3 LSBs are filled with the 3 MSBs of the 5 bits)

The figure below describes the pixel data mapping depending on the selected format.

Table 90. Pixel Data mapping versus Color Format

ARGB8888			
@+3 A_x[7:0]	@+2 R_x[7:0]	@+1 G_x[7:0]	@ B_x[7:0]
@+7 A_{x+1}[7:0]	@+6 R_{x+1}[7:0]	@+5 G_{x+1}[7:0]	@+4 B_{x+1}[7:0]
RGB888			
@+3 B_{x+1}[7:0]	@+2 R_x[7:0]	@+1 G_x[7:0]	@ B_x[7:0]
@+7 G_{x+2}[7:0]	@+6 B_{x+2}[7:0]	@+5 R_{x+1}[7:0]	@+4 G_{x+1}[7:0]
RGB565			
@+3 R_{x+1}[4:0] G_{x+1}[5:3]	@+2 G_{x+1}[2:0] B_{x+1}[4:0]	@+1 R_x[4:0] G_x[5:3]	@ G_x[2:0] B_x[4:0]

Table 90. Pixel Data mapping versus Color Format (continued)

ARGB8888			
@+7 R_{x+3}[4:0] G_{x+3}[5:3]	@+6 G_{x+3}[2:0] B_{x+3}[4:0]	@+5 R_{x+2}[4:0] G_{x+2}[5:3]	@+4 G_{x+2}[2:0] B_{x+2}[4:0]
ARGB1555			
@+3 A_{x+1}[0]R_{x+1}[4:0] G_{x+1}[4:3]	@+2 G_{x+1}[2:0] B_{x+1}[4:0]	@+1 A_x[0] R_x[4:0] G_x[4:3]	@ G_x[2:0] B_x[4:0]
@+7 A_{x+3}[0]R_{x+3}[4:0] G_{x+3}[4:3]	@+6 G_{x+3}[2:0] B_{x+3}[4:0]	@+5 A_{x+2}[0]R_{x+2}[4:0]G_{x+2}[4:3]	@+4 G_{x+2}[2:0] B_{x+2}[4:0]
ARGB4444			
@+3 A_{x+1}[3:0]R_{x+1}[3:0]	@+2 G_{x+1}[3:0] B_{x+1}[3:0]	@+1 A_x[3:0] R_x[3:0]	@ G_x[3:0] B_x[3:0]
@+7 A_{x+3}[3:0]R_{x+3}[3:0]	@+6 G_{x+3}[3:0] B_{x+3}[3:0]	@+5 A_{x+2}[3:0]R_{x+2}[3:0]	@+4 G_{x+2}[3:0] B_{x+2}[3:0]
L8			
@+3 L_{x+3}[7:0]	@+2 L_{x+2}[7:0]	@+1 L_{x+1}[7:0]	@ L_x[7:0]
@+7 L_{x+7}[7:0]	@+6 L_{x+6}[7:0]	@+5 L_{x+5}[7:0]	@+4 L_{x+4}[7:0]
AL44			
@+3 A_{x+3}[3:0] L_{x+3}[3:0]	@+2 A_{x+2}[3:0] L_{x+2}[3:0]	@+1 A_{x+1}[3:0] L_{x+1}[3:0]	@ A_x[3:0] L_x[3:0]
@+7 A_{x+7}[3:0] L_{x+7}[3:0]	@+6 A_{x+6}[3:0] L_{x+6}[3:0]	@+5 A_{x+5}[3:0] L_{x+5}[3:0]	@+4 A_{x+4}[3:0] L_{x+4}[3:0]
AL88			
@+3 A_{x+1}[7:0]	@+2 L_{x+1}[7:0]	@+1 A_x[7:0]	@ L_x[7:0]
@+7 A_{x+3}[7:0]	@+6 L_{x+3}[7:0]	@+5 A_{x+2}[7:0]	@+4 L_{x+2}[7:0]

Color Look-Up Table (CLUT)

The CLUT can be enabled at run-time for every layer through the **LTDC_LxCR** register and it is only useful in case of indexed color when using the L8, AL44 and AL88 input pixel format.

First, the CLUT has to be loaded with the R, G and B values that will replace the original R, G, B values of that pixel (indexed color). Each color (RGB value) has its own address which is the position within the CLUT.

The R, G and B values and their own respective address are programmed through the **LTDC_LxCLUTWR** register.

- In case of L8 and AL88 input pixel format, the CLUT has to be loaded by 256 colors. The address of each color is configured in the CLUTADD bits in the **LTDC_LxCLUTWR** register.
- In case of AL44 input pixel format, the CLUT has to be only loaded by 16 colors. The address of each color must be filled by replicating the 4-bit L channel to 8-bit as follows:
  - L0 (indexed color 0), at address 0x00
  - L1, at address 0x11
  - L2, at address 0x22
  - .....
  - L15, at address 0xFF

Color Frame Buffer Address

Every Layer has a start address for the color frame buffer configured through the **LTDC_LxCFBAR** register.

When a layer is enabled, the data is fetched from the Color Frame Buffer.

Color Frame Buffer Length

Every layer has a total line length setting for the color frame buffer in bytes and a number of lines in the frame buffer configurable in the **LTDC_LxCFBLR** and **LTDC_LxCFBLNR** register respectively.

The line length and the number of lines settings are used to stop the prefetching of data to the layer FIFO at the end of the frame buffer.

- If it is set to less bytes than required, a FIFO underrun interrupt is generated if it has been previously enabled.
- If it is set to more bytes than actually required, the useless data read from the FIFO is discarded. The useless data is not displayed.

Color Frame Buffer Pitch

Every layer has a configurable pitch for the color frame buffer, which is the distance between the start of one line and the beginning of the next line in bytes. It is configured through the **LTDC_LxCFBLR** register.

Layer Blending

The blending is always active and the two layers can be blended following the blending factors configured through the **LTDC_LxBFCR** register.

The blending order is fixed and it is bottom up. If two layers are enabled, first the Layer1 is blended with the Background color, then the Layer2 is blended with the result of blended color of Layer1 and the background. Refer to *Figure 84*.

Figure 84. Blending two layers with background

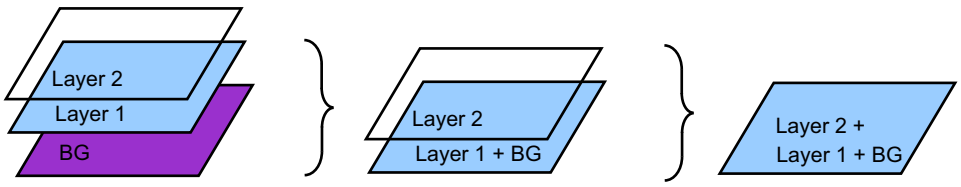

Default color

Every layer can have a default color in the format ARGB which is used outside the defined layer window or when a layer is disabled.

The default color is configured through the **LTDC_LxDCCR** register.

The blending is always performed between the two layers even when a layer is disabled. To avoid displaying the default color when a layer is disabled, keep the blending factors of this layer in the LTDC_LxBFCR register to their reset value.

Color Keying

A color key (RGB) can be configured to be representative for a transparent pixel.

If the Color Keying is enabled, the current pixels (after format conversion and before blending) are compared to the color key. If they match for the programmed RGB value, all channels (ARGB) of that pixel are set to 0.

The Color Key value can be configured and used at run-time to replace the pixel RGB value.

The Color Keying is enabled through the **LTDC_LxCKCR** register.

16.5 LTDC interrupts

The LTDC provides four maskable interrupts logically ORed to two interrupt vectors.

The interrupt sources can be enabled or disabled separately through the **LTDC_IER** register. Setting the appropriate mask bit to 1 enables the corresponding interrupt.

The two interrupts are generated on the following events:

- Line interrupt: generated when a programmed line is reached. The line interrupt position is programmed in the LTDC_LIPCR register
- Register Reload interrupt: generated when the shadow registers reload was performed during the vertical blanking period
- FIFO Underrun interrupt: generated when a pixel is requested from an empty layer FIFO
- Transfer Error interrupt: generated when an AHB bus error occurs during data transfer

Those interrupts events are connected to the NVIC controller as described in the figure below.

Figure 85. Interrupt events

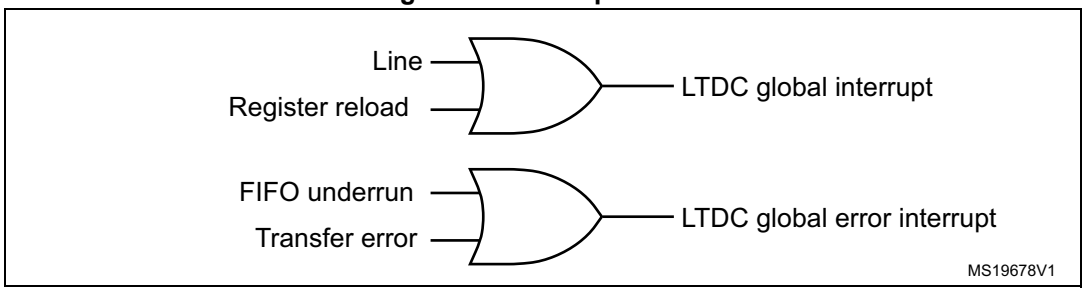

Table 91. LTDC interrupt requests

Interrupt event	Event flag	Enable Control bit
Line	LIF	LIE
Register Reload	RRIF	RRIEN
FIFO Underrun	FUDERRIF	FUDERRIE
Transfer Error	TERRIF	TERRIE

16.6 LTDC programming procedure

- Enable the LTDC clock in the RCC register
- Configure the required Pixel clock following the panel datasheet
- Configure the Synchronous timings: VSYNC, HSYNC, Vertical and Horizontal back porch, active data area and the front porch timings following the panel datasheet as described in the *Section 16.4.1: LTDC Global configuration parameters*
- Configure the synchronous signals and clock polarity in the **LTDC_GCR** register
- If needed, configure the background color in the **LTDC_BCCR** register
- Configure the needed interrupts in the **LTDC_IER** and **LTDC_LIPCR** register
- Configure the Layer1/2 parameters by programming:
  - The Layer window horizontal and vertical position in the **LTDC_LxWHPCR** and **LTDC_WVPCR** registers. The layer window must be in the active data area.
  - The pixel input format in the **LTDC_LxPFCR** register
  - The color frame buffer start address in the **LTDC_LxCFBAR** register
  - The line length and pitch of the color frame buffer in the **LTDC_LxCFBLR** register
  - The number of lines of the color frame buffer in the **LTDC_LxCFBLNR** register
  - if needed, load the CLUT with the RGB values and its address in the **LTDC_LxCLUTWR** register
  - If needed, configure the default color and the blending factors respectively in the **LTDC_LxDCCR** and **LTDC_LxBFCR** registers
- Enable Layer1/2 and if needed the CLUT in the **LTDC_LxCR** register
- If needed, dithering and color keying can be enabled respectively in the **LTDC_GCR and LTDC_LxCKCR** registers. It can be also enabled on the fly.
- Reload the shadow registers to active register through the **LTDC_SRCR** register.
- Enable the LCD-TFT controller in the **LTDC_GCR** register.
- All layer parameters can be modified on the fly except the CLUT. The new configuration has to be either reloaded immediately or during vertical blanking period by configuring the **LTDC_SRCR** register.

Note: All layer's registers are shadowed. Once a register is written, it should not be modified again before the reload has been done. Thus, a new write to the same register will override the previous configuration if not yet reloaded.

16.7 LTDC registers

16.7.1 LTDC Synchronization Size Configuration Register (LTDC_SSCR)

This register defines the number of Horizontal Synchronization pixels minus 1 and the number of Vertical Synchronization lines minus 1. Refer to *Figure 82* and *Section 16.4: LTDC programmable parameters* for an example of configuration.

Address offset: 0x08

Reset value: 0x0000 0000

31	30	29	28	27	26	25	24	23	22	21	20	19	18	17	16
Reserved				HSW[11:0]											
				rw	rw	rw	rw	rw	rw	rw	rw	rw	rw	rw	rw

15	14	13	12	11	10	9	8	7	6	5	4	3	2	1	0
Reserved					VSH[10:0]										
					rw	rw	rw	rw	rw	rw	rw	rw	rw	rw	rw

Bits 31:28 Reserved, must be kept at reset value

Bits 27:16 **HSW[11:0]**: Horizontal Synchronization Width (in units of pixel clock period)
These bits define the number of Horizontal Synchronization pixel minus 1.

Bits 15:11 Reserved, must be kept at reset value

Bits 10:0 **VSH[10:0]**: Vertical Synchronization Height (in units of horizontal scan line)

These bits define the vertical Synchronization height minus 1. It represents the number
of horizontal synchronization lines.

16.7.2 LTDC Back Porch Configuration Register (LTDC_BPCR)

This register defines the accumulated number of Horizontal Synchronization and back porch pixels minus 1 (**HSYNC Width + HBP- 1)** and the accumulated number of Vertical Synchronization and back porch lines minus 1 (**VSYNC Height + VBP - 1)**. Refer to *Figure 82* and *Section 16.4: LTDC programmable parameters* for an example of configuration.

Address offset: 0x0C

Reset value: 0x0000 0000

31	30	29	28	27	26	25	24	23	22	21	20	19	18	17	16
Reserved				AHBP[11:0]											
				rw	rw	rw	rw	rw	rw	rw	rw	rw	rw	rw	rw

15	14	13	12	11	10	9	8	7	6	5	4	3	2	1	0
Reserved					AVBP[10:0]										
					rw	rw	rw	rw	rw	rw	rw	rw	rw	rw	rw

Bits 31:28 Reserved, must be kept at reset value

Bits 27:16 **AHBP[11:0]**: Accumulated Horizontal back porch (in units of pixel clock period)

These bits define the Accumulated Horizontal back porch width which includes the Horizontal Synchronization and Horizontal back porch pixels minus 1.

The Horizontal back porch is the period between Horizontal Synchronization going inactive and the start of the active display part of the next scan line.

Bits 15:11 Reserved, must be kept at reset value

Bits 10:0 **AVBP[10:0]:** Accumulated Vertical back porch (in units of horizontal scan line)

These bits define the accumulated Vertical back porch width which includes the Vertical Synchronization and Vertical back porch lines minus 1.

The Vertical back porch is the number of horizontal scan lines at a start of frame to the start of the first active scan line of the next frame.

16.7.3 LTDC Active Width Configuration Register (LTDC_AWCR)

This register defines the accumulated number of Horizontal Synchronization, back porch and Active pixels minus 1 (**HSYNC width + HBP + Active Width - 1)** and the accumulated number of Vertical Synchronization, back porch lines and Active lines minus 1 (**VSYNC Height+ BVBP + Active Height - 1)**. Refer to *Figure 82* and *Section 16.4: LTDC programmable parameters* for an example of configuration.

Address offset: 0x10

Reset value: 0x0000 0000

31	30	29	28	27	26	25	24	23	22	21	20	19	18	17	16
Reserved				AAW[11:0]											
				rw	rw	rw	rw	rw	rw	rw	rw	rw	rw	rw	rw

15	14	13	12	11	10	9	8	7	6	5	4	3	2	1	0
Reserved					AAH[10:0]										
					rw	rw	rw	rw	rw	rw	rw	rw	rw	rw	rw

Bits 31:28 Reserved, must be kept at reset value

Bits 27:16 **AAW[11:0]**: Accumulated Active Width (in units of pixel clock period)

These bits define the Accumulated Active Width which includes the Horizontal Synchronization, Horizontal back porch and Active pixels minus 1.

The Active Width is the number of pixels in active display area of the panel scan line. The maximum Active Width supported is 0x400.

Bits 15:11 Reserved, must be kept at reset value

Bits 10:0 **AAH[10:0]**: Accumulated Active Height (in units of horizontal scan line)

These bits define the Accumulated Height which includes the Vertical Synchronization, Vertical back porch and the Active Height lines minus 1. The Active Height is the number of active lines in the panel. The maximum Active Height supported is 0x300.

16.7.4 LTDC Total Width Configuration Register (LTDC_TWCR)

This register defines the accumulated number of Horizontal Synchronization, back porch, Active and front porch pixels minus 1 (**HSYNC Width + HBP + Active Width + HFP - 1)** and the accumulated number of Vertical Synchronization, back porch lines, Active and Front lines minus 1 (**VSYNC Height+ BVBP + Active Height + VFP - 1)**. Refer to *Figure 82* and *Section 16.4: LTDC programmable parameters* for an example of configuration.

Address offset: 0x14

Reset value: 0x0000 0000

31	30	29	28	27	26	25	24	23	22	21	20	19	18	17	16
Reserved				TOTALW[11:0]											
				rw	rw	rw	rw	rw	rw	rw	rw	rw	rw	rw	rw

16	14	13	12	11	10	9	8	7	6	5	4	3	2	1	0
Reserved					TOTALH[10:0]										
					rw	rw	rw	rw	rw	rw	rw	rw	rw	rw	rw

Bits 31:28 Reserved, must be kept at reset value

Bits 27:16 **TOTALW[11:0]:** Total Width (in units of pixel clock period)
These bits defines the accumulated Total Width which includes the Horizontal Synchronization, Horizontal back porch, Active Width and Horizontal front porch pixels minus 1.

Bits 15:11 Reserved, must be kept at reset value

Bits 10:0 **TOTALH[10:0]**: Total Height (in units of horizontal scan line)
These bits defines the accumulated Height which includes the Vertical Synchronization, Vertical back porch, the Active Height and Vertical front porch Height lines minus 1.

16.7.5 LTDC Global Control Register (LTDC_GCR)

This register defines the global configuration of the LCD-TFT controller.

Address offset: 0x18

Reset value: 0x0000 2220

31	30	29	28	27	26	25	24	23	22	21	20	19	18	17	16
HSPOL	VSPOL	DEPOL	PCPOL	Reserved											DEN
rw	rw	rw	rw												rw

15	14	13	12	11	10	9	8	7	6	5	4	3	2	1	0
Reserved	DRW[2:0]			Reserved	DGW[2:0]			Reserved	DBW[2:0]			Reserved			LTDCEN
	r	r	r		r	r	r		r	r	r				rw

Bit 31 **HSPOL**: Horizontal Synchronization Polarity
This bit is set and cleared by software.
0: Horizontal Synchronization polarity is active low
1: Horizontal Synchronization polarity is active high

Bit 30 **VSPOL**: Vertical Synchronization Polarity
This bit is set and cleared by software.
0: Vertical Synchronization is active low
1: Vertical Synchronization is active high

Bit 29 **DEPOL**: Data Enable Polarity
This bit is set and cleared by software.
0: Data Enable polarity is active low
1: Data Enable polarity is active high

Bit 28 **PCPOL**: Pixel Clock Polarity
This bit is set and cleared by software.
0: input pixel clock
1: inverted input pixel clock

Bits 27:17 Reserved, must be kept at reset value

Bit 16 **DEN**: Dither Enable
This bit is set and cleared by software.
0: Dither disable
1: Dither enable

Bit 15 Reserved, must be kept at reset value

Bits 14:12 **DRW[2:0]**: Dither Red Width
These bits return the Dither Red Bits

Bit 11 Reserved, must be kept at reset value

Bits 10:8 **DGW[2:0]**: Dither Green Width
These bits return the Dither Green Bits

Bit 7 Reserved, must be kept at reset value

Bits 6:4 **DBW[2:0]**: Dither Blue Width
These bits return the Dither Blue Bits

Bits 3:1 Reserved, must be kept at reset value

Bit 0 **LTDCEN**: LCD-TFT controller enable bit
This bit is set and cleared by software.
0: LTDC disable
1: LTDC enable

16.7.6 LTDC Shadow Reload Configuration Register (LTDC_SRCR)

This register allows to reload either immediately or during the vertical blanking period, the shadow registers values to the active registers. The shadow registers are all Layer1 and Layer2 registers except the LTDC_L1CLUTWR and the LTDC_L2CLUTWR.

Address offset: 0x24

Reset value: 0x0000 0000

31	30	29	28	27	26	25	24	23	22	21	20	19	18	17	16
Reserved															
15	14	13	12	11	10	9	8	7	6	5	4	3	2	1	0
Reserved														VBR	IMR
														rw	rw

Bits 31:2 Reserved, must be kept at reset value

Bit 1 **VBR**: Vertical Blanking Reload

This bit is set by software and cleared only by hardware after reload. (it cannot be cleared through register write once it is set)

0: No effect

1: The shadow registers are reloaded during the vertical blanking period (at the beginning of the first line after the Active Display Area)

Bit 0 **IMR**: Immediate Reload

This bit is set by software and cleared only by hardware after reload.

0: No effect

1: The shadow registers are reloaded immediately

Note: The shadow registers read back the active values. Until the reload has been done, the 'old' value will be read.

16.7.7 LTDC Background Color Configuration Register (LTDC_BCCR)

This register defines the background color (RGB888).

Address offset: 0x2C

Reset value: 0x0000 0000

31	30	29	28	27	26	25	24	23	22	21	20	19	18	17	16
Reserved								BCRED[7:0]							
								rw	rw	rw	rw	rw	rw	rw	rw
15	14	13	12	11	10	9	8	7	6	5	4	3	2	1	0
BCGREEN[7:0]								BCBLUE[7:0]							
rw								rw	rw	rw	rw	rw	rw	rw	rw

Bits 31:24 Reserved, must be kept at reset value

Bits 23:16 **BCRED[7:0]**: Background Color Red value
These bits configure the background red value

Bits 15:8 **BCGREEN[7:0]**: Background Color Green value
These bits configure the background green value

Bits 7:0 **BCBLUE[7:0]**: Background Color Blue value
These bits configure the background blue value

16.7.8 LTDC Interrupt Enable Register (LTDC_IER)

This register determines which status flags generate an interrupt request by setting the corresponding bit to 1.

Address offset: 0x34

Reset value: 0x0000 0000

31	30	29	28	27	26	25	24	23	22	21	20	19	18	17	16
Reserved															
15	14	13	12	11	10	9	8	7	6	5	4	3	2	1	0
Reserved												RRIE	TERRIE	FUIE	LIE
												rw	rw	rw	rw

Bits 31:4 Reserved, must be kept at reset value

Bit 3 **RRIE**: Register Reload interrupt enable
This bit is set and cleared by software
0: Register Reload interrupt disable
1: Register Reload interrupt enable

Bit 2 **TERRIE**: Transfer Error Interrupt Enable
This bit is set and cleared by software
0: Transfer Error interrupt disable
1: Transfer Error interrupt enable

Bit 1 **FUIE**: FIFO Underrun Interrupt Enable
This bit is set and cleared by software
0: FIFO Underrun interrupt disable
1: FIFO Underrun Interrupt enable

Bit 0 **LIE**: Line Interrupt Enable
This bit is set and cleared by software
0: Line interrupt disable
1: Line Interrupt enable

16.7.9 LTDC Interrupt Status Register (LTDC_ISR)

This register returns the interrupt status flag

Address offset: 0x38

Reset value: 0x0000 0000

31	30	29	28	27	26	25	24	23	22	21	20	19	18	17	16
Reserved															
15	14	13	12	11	10	9	8	7	6	5	4	3	2	1	0
Reserved												RRIF	TERRIF	FUIF	LIF
												r	r	r	r

Bits 31:24 Reserved, must be kept at reset value

Bit 3 **RRIF**: Register Reload Interrupt Flag

0: No Register Reload interrupt generated

1: Register Reload interrupt generated when a vertical blanking reload occurs (and the first line after the active area is reached)

Bit 2 **TERRIF**: Transfer Error interrupt flag

0: No Transfer Error interrupt generated

1: Transfer Error interrupt generated when a Bus error occurs

Bit 1 **FUIF**: FIFO Underrun Interrupt flag

0: NO FIFO Underrun interrupt generated.

1: A FIFO underrun interrupt is generated, if one of the layer FIFOs is empty and pixel data is read from the FIFO

Bit 0 **LIF**: Line Interrupt flag

0: No Line interrupt generated

1: A Line interrupt is generated, when a programmed line is reached

16.7.10 LTDC Interrupt Clear Register (LTDC_ICR)

Address offset: 0x3C

Reset value: 0x0000 0000

31	30	29	28	27	26	25	24	23	22	21	20	19	18	17	16
Reserved															
15	14	13	12	11	10	9	8	7	6	5	4	3	2	1	0
Reserved												CRRIF	CTERRIF	CFUIF	CLIF
												w	w	w	w

Bits 31:24 Reserved, must be kept at reset value

Bit 3 **CRRIF**: Clears Register Reload Interrupt Flag
0: No effect
1: Clears the RRIF flag in the LTDC_ISR register

Bit 2 **CTERRIF**: Clears the Transfer Error Interrupt Flag
0: No effect
1: Clears the TERRIF flag in the LTDC_ISR register.

Bit 1 **CFUIF**: Clears the FIFO Underrun Interrupt flag
0: No effect
1: Clears the FUDERRIF flag in the LTDC_ISR register.

Bit 0 **CLIF**: Clears the Line Interrupt Flag
0: No effect
1: Clears the LIF flag in the LTDC_ISR register.

16.7.11 LTDC Line Interrupt Position Configuration Register (LTDC_LIPCR)

This register defines the position of the line interrupt. The line value to be programmed depends on the timings parameters. Refer to *Figure 82*.

Address offset: 0x40

Reset value: 0x0000 0000

31	30	29	28	27	26	25	24	23	22	21	20	19	18	17	16
Reserved															
15	14	13	12	11	10	9	8	7	6	5	4	3	2	1	0
Reserved					LIPOS[10:0]										
					rw	rw	rw	rw	rw	rw	rw	rw	rw	rw	rw

Bits 31:11 Reserved, must be kept at reset value

Bits 10:0 **LIPOS[10:0]**: Line Interrupt Position
These bits configure the line interrupt position

16.7.12 LTDC Current Position Status Register (LTDC_CPSR)

Address offset: 0x44

Reset value: 0x0000 0000

31	30	29	28	27	26	25	24	23	22	21	20	19	18	17	16
CXPOS[15:0]															
r	r	r	r	r	r	r	r	r	r	r	r	r	r	r	r
15	14	13	12	11	10	9	8	7	6	5	4	3	2	1	0
CYPOS{15;0]															
r	r	r	r	r	r	r	r	r	r	r	r	r	r	r	r

Bits 31:16: **CXPOS[15:0]**: Current X Position
These bits return the current X position

Bits 15:0 **CYPOS[15:0]**: Current Y Position
These bits return the current Y position

16.7.13 LTDC Current Display Status Register (LTDC_CDSR)

This register returns the status of the current display phase which is controlled by the HSYNC, VSYNC, and Horizontal/Vertical DE signals.

Example: if the current display phase is the vertical synchronization, the VSYNCS bit is set (active high). If the current display phase is the horizontal synchronization, the HSYNCS bit is active high.

Address offset: 0x48

Reset value: 0x0000 000F

31	30	29	28	27	26	25	24	23	22	21	20	19	18	17	16
Reserved															

15	14	13	12	11	10	9	8	7	6	5	4	3	2	1	0
Reserved												HSYNCS	VSYNCS	HDES	VDES
												r	r	r	r

Bits 31:24 Reserved, must be kept at reset value

Bit 3 **HSYNCS**: Horizontal Synchronization display Status
0: Active low
1: Active high

Bit 2 **VSYNCS**: Vertical Synchronization display Status
0: Active low
1: Active high

Bit 1 **HDES**: Horizontal Data Enable display Status
0: Active low
1: Active high

Bit 0 **VDES**: Vertical Data Enable display Status
0: Active low
1: Active high

*Note: The returned status does not depend on the configured polarity in the **LTDC_GCR** register, instead it returns the current active display phase.*

16.7.14 LTDC Layerx Control Register (LTDC_LxCR) (where x=1..2)

Address offset: 0x84 + 0x80 x (*Layerx* -1), *Layerx* = 1 or 2

Reset value: 0x0000 0000

31	30	29	28	27	26	25	24	23	22	21	20	19	18	17	16
Reserved															

15	14	13	12	11	10	9	8	7	6	5	4	3	2	1	0
Reserved											CLUTEN	Reserved		COLKEN	LEN
											rw			rw	rw

Bits 31:5 Reserved, must be kept at reset value

Bit 4 **CLUTEN**: Color Look-Up Table Enable
This bit is set and cleared by software.
0: Color Look-Up Table disable
1: Color Look-Up Table enable
The CLUT is only meaningful for L8, AL44 and AL88 pixel format. Refer to *Color Look-Up Table (CLUT) on page 488*

Bit 3 Reserved, must be kept at reset value

Bit 2 Reserved, must be kept at reset value

Bit 1 **COLKEN**: Color Keying Enable
This bit is set and cleared by software.
0: Color Keying disable
1: Color Keying enable

Bit 0 **LEN**: Layer Enable
This bit is set and cleared by software.
0: Layer disable
1: Layer enable

16.7.15 LTDC Layerx Window Horizontal Position Configuration Register (LTDC_LxWHPCR) (where x=1..2)

This register defines the Horizontal Position (first and last pixel) of the layer 1 or 2 window.

The first visible pixel of a line is the programmed value of ***AHBP[10:0] bits + 1*** in the **LTDC_BPCR** register.

The last visible pixel of a line is the programmed value of ***AAW[10:0] bits*** in the **LTDC_AWCR** register.

Address offset: 0x88 + 0x80 x (*Layerx* -1), *Layerx* = 1 or 2

Reset value: 0x0000 0000

31	30	29	28	27	26	25	24	23	22	21	20	19	18	17	16
Reserved				WHSPPOS[11:0]											
				rw	rw	rw	rw	rw	rw	rw	rw	rw	rw	rw	rw
15	14	13	12	11	10	9	8	7	6	5	4	3	2	1	0
Reserved				WHSTPOS[11:0]											
				rw	rw	rw	rw	rw	rw	rw	rw	rw	rw	rw	rw

Bits 31:28 Reserved, must be kept at reset value

Bits 27:16 **WHSPPOS[11:0]**: Window Horizontal Stop Position
These bits configure the last visible pixel of a line of the layer window.
The following condition must be respected:
WHSPPOS[11:0] ≥ AHBP[10:0] bits + 1 (programmed in LTDC_BPCR register)

Bits 15:12 Reserved, must be kept at reset value

Bits 11:0 **WHSTPOS[11:0]**: Window Horizontal Start Position
These bits configure the first visible pixel of a line of the layer window.
The following condition must be respected:
WHSTPOS[11:0] must be ≤ AAW[10:0] bits (programmed in the LTDC_AWCR register).

Example:

The LTDC_BPCR register is configured to 0x000E0005(AHBP[11:0] is 0xE) and the LTDC_AWCR register is configured to 0x028E01E5(AAW[11:0] is 0x28E). To configure the horizontal position of a window size of 630x460, with horizontal start offset of 5 pixels in the Active data area.

1. Layer window first pixel: WHSTPOS[11:0] should be programmed to 0x14 (0xE+1+0x5)
2. Layer window last pixel: WHSPPOS[11:0] should be programmed to 0x28A

16.7.16 LTDC Layerx Window Vertical Position Configuration Register (LTDC_LxWVPCR) (where x=1..2)

This register defines the vertical position (first and last line) of the layer1 or 2 window.

The first visible line of a frame is the programmed value of ***AVBP[10:0] bits + 1*** in the register **LTDC_BPCR** register.

The last visible line of a frame is the programmed value of ***AAH[10:0] bits*** in the **LTDC_AWCR** register.

Address offset: 0x8C + 0x80 x (*Layerx* -1), *Layerx* = 1 or 2

Reset value: 0x0000 0000

31	30	29	28	27	26	25	24	23	22	21	20	19	18	17	16
Reserved					WVSPPOS[10:0]										
					rw	rw	rw	rw	rw	rw	rw	rw	rw	rw	rw
15	14	13	12	11	10	9	8	7	6	5	4	3	2	1	0
Reserved					WVSTPOS[10:0]										
					rw	rw	rw	rw	rw	rw	rw	rw	rw	rw	rw

Bits 31:27 Reserved, must be kept at reset value

Bits 26:16 **WVSPPOS[10:0]**: Window Vertical Stop Position
These bits configures the last visible line of the layer window.
The following condition must be respected:
WHSPPOS[11:0] must be ≥ AVBP[10:0] bits + 1 (programmed in LTDC_BPCR register)

Bits 15:11 Reserved, must be kept at reset value

Bits 10:0 **WVSTPOS[10:0]**: Window Vertical Start Position
These bits configure the first visible line of the layer window.
The following condition must be respected:
WHSTPOS[11:0] must be ≤ AAH[10:0] bits (programmed in the LTDC_AWCR register)

Example:

The LTDC_BPCR register is configured to 0x000E0005 (AVBP[10:0] is 0x5) and the LTDC_AWCR register is configured to 0x028E01E5 (AAH[10:0] is 0x1E5). To configure the vertical position of a window size of 630x460, with vertical start offset of 8 lines in the Active data area:

1. Layer window first line: WVSTPOS[10:0] should be programmed to 0xE (0x5 + 1 + 0x8)
2. Layer window last line: WVSPPOS[10:0] should be programmed to 0x1DA

16.7.17 LTDC Layerx Color Keying Configuration Register (LTDC_LxCKCR) (where x=1..2)

This register defines the color key value (RGB), which is used by the Color Keying.

Address offset: 0x90 + 0x80 x (*Layerx* -1), *Layerx* = 1 or 2

Reset value: 0x0000 0000

31	30	29	28	27	26	25	24	23	22	21	20	19	18	17	16
Reserved								CKRED[7:0]							
								rw	rw	rw	rw	rw	rw	rw	rw
15	14	13	12	11	10	9	8	7	6	5	4	3	2	1	0
CKGREEN[7:0]								CKBLUE[7:0]							
rw								rw	rw	rw	rw	rw	rw	rw	rw

Bits 31:24 Reserved, must be kept at reset value

Bits 23:16 **CKRED[7:0]**: Color Key Red value

Bits 15:8 **CKGREEN[7:0]**: Color Key Green value

Bits 7:0 **CKBLUE[7:0]**: Color Key Blue value

16.7.18 LTDC Layerx Pixel Format Configuration Register (LTDC_LxPFCR) (where x=1..2)

This register defines the pixel format which is used for the stored data in the frame buffer of a layer. The pixel data is read from the frame buffer and then transformed to the internal format 8888 (ARGB).

Address offset: 0x94 + 0x80 x (*Layerx* -1), *Layerx* = 1 or 2

Reset value: 0x0000 0000

31	30	29	28	27	26	25	24	23	22	21	20	19	18	17	16
Reserved															
15	14	13	12	11	10	9	8	7	6	5	4	3	2	1	0
Reserved													PF[2:0]		
													rw	rw	rw

Bits 31:3 Reserved, must be kept at reset value

Bits 2:0 **PF[2:0]**: Pixel Format
These bits configures the Pixel format
000: ARGB8888
001: RGB888
010: RGB565
011: ARGB1555
100: ARGB4444
101: L8 (8-Bit Luminance)
110: AL44 (4-Bit Alpha, 4-Bit Luminance)
111: AL88 (8-Bit Alpha, 8-Bit Luminance)

16.7.19 LTDC Layerx Constant Alpha Configuration Register (LTDC_LxCACR) (where x=1..2)

This register defines the constant alpha value (divided by 255 by Hardware), which is used in the alpha blending. Refer to LTDC_LxBFCR register.

Address offset: 0x98 + 0x80 x (*Layerx* -1), *Layerx* = 1 or 2

Reset value: (Layerx -1) 0x0000 00FF

31	30	29	28	27	26	25	24	23	22	21	20	19	18	17	16
Reserved															
15	14	13	12	11	10	9	8	7	6	5	4	3	2	1	0
Reserved								CONSTA[7:0]							
								rw	rw	rw	rw	rw	rw	rw	rw

Bits 31:8 Reserved, must be kept at reset value

Bits 7:0 **CONSTA[7:0]**: Constant Alpha
These bits configure the Constant Alpha used for blending. The Constant Alpha is divided by 255 by hardware.
Example: if the programmed Constant Alpha is 0xFF, the Constant Alpha value is 255/255=1

16.7.20 LTDC Layerx Default Color Configuration Register (LTDC_LxDCCR) (where x=1..2)

This register defines the default color of a layer in the format ARGB. The default color is used outside the defined layer window or when a layer is disabled. The reset value of 0x00000000 defines a transparent black color.

Address offset: 0x9C + 0x80 x (*Layerx* -1), *Layerx* = 1 or 2

Reset value: 0x0000 0000

31	30	29	28	27	26	25	24	23	22	21	20	19	18	17	16
DCALPHA[7:0]								DCRED[7:0]							
rw								rw	rw	rw	rw	rw	rw	rw	rw
15	14	13	12	11	10	9	8	7	6	5	4	3	2	1	0
DCGREEN[7:0]								DCBLUE[7:0]							
rw								rw	rw	rw	rw	rw	rw	rw	rw

Bits 31:24 **DCALPHA[7:0]**: Default Color Alpha
These bits configure the default alpha value

Bits 23:16 **DCRED[7:0]**: Default Color Red
These bits configure the default red value

Bits 15:8 **DCGREEN[7:0]**: Default Color Green
These bits configure the default green value

Bits 7:0 **DCBLUE[7:0]**: Default Color Blue
These bits configure the default blue value

16.7.21 LTDC Layerx Blending Factors Configuration Register (LTDC_LxBFCR) (where x=1..2)

This register defines the blending factors F1 and F2.

The general blending formula is: BC = BF1 x C + BF2 x Cs

- BC = Blended color
- BF1 = Blend Factor 1
- C = Current layer color
- BF2 = Blend Factor 2
- Cs = subjacent layers blended color

Address offset: 0xA0 + 0x80 x (*Layerx* -1), *Layerx* = 1 or 2

Reset value: 0x0000 0607

31	30	29	28	27	26	25	24	23	22	21	20	19	18	17	16
Reserved															

15	14	13	12	11	10	9	8	7	6	5	4	3	2	1	0
Reserved					BF1[2:0]			Reserved					BF2[2:0]		
					rw	rw	rw						rw	rw	rw

Bits 31:11 Reserved, must be kept at reset value

Bits 10:8 **BF1[2:0]**: Blending Factor 1
These bits select the blending factor F1
000: Reserved
001: Reserved
010: Reserved
011: Reserved
100: Constant Alpha
101: Reserved
110: Pixel Alpha x Constant Alpha
111:Reserved

Bits 7:3 Reserved, must be kept at reset value

Bits 2:0 **BF2[2:0]**: Blending Factor 2
These bits select the blending factor F2
000: Reserved
001: Reserved
010: Reserved
011: Reserved
100: Reserved
101: 1 - Constant Alpha
110: Reserved
111: 1 - (Pixel Alpha x Constant Alpha)

Note: The Constant Alpha value, is the programmed value in the LxCACR register divided by 255 by hardware.

Example: Only layer1 is enabled, BF1 configured to Constant Alpha

BF2 configured to 1 - *Constant Alpha*

Constant Alpha: The Constant Alpha programmed in the LxCACR register is 240 (0xF0). Thus, the Constant Alpha value is 240/255 = 0.94

C: Current Layer Color is 128

Cs: Background color is 48

Layer1 is blended with the background color.

BC = Constant Alpha x C + *(1 - Constant Alpha*) x Cs = *0.94 x 128 + (1- 0.94) x 48 = 123.*

16.7.22 LTDC Layerx Color Frame Buffer Address Register (LTDC_LxCFBAR) (where x=1..2)

This register defines the color frame buffer start address which has to point to the address where the pixel data of the top left pixel of a layer is stored in the frame buffer.

Address offset: 0xAC + 0x80 x (*Layerx* -1), *Layerx* = 1 or 2

Reset value: 0x0000 0000

31	30	29	28	27	26	25	24	23	22	21	20	19	18	17	16
CFBADD[31:0]															
rw	rw	rw	rw	rw	rw	rw	rw	rw	rw	rw	rw	rw	rw	rw	rw
15	14	13	12	11	10	9	8	7	6	5	4	3	2	1	0
CFBADD[31:0]															
rw	rw	rw	rw	rw	rw	rw	rw	rw	rw	rw	rw	rw	rw	rw	rw

Bits 31:0 **CFBADD[31:0]**: Color Frame Buffer Start Address
These bits defines the color frame buffer start address.

16.7.23 LTDC Layerx Color Frame Buffer Length Register (LTDC_LxCFBLR) (where x=1..2)

This register defines the color frame buffer line length and pitch.

Address offset: 0xB0 + 0x80 x (*Layerx* -1), *Layerx* = 1 or 2

Reset value: 0x0000 0000

31	30	29	28	27	26	25	24	23	22	21	20	19	18	17	16
Reserved			CFBP[12:0]												
			rw	rw	rw	rw	rw	rw	rw	rw	rw	rw	rw	rw	rw
15	14	13	12	11	10	9	8	7	6	5	4	3	2	1	0
Reserved			CFBLL[12:0]												
			rw	rw	rw	rw	rw	rw	rw	rw	rw	rw	rw	rw	rw

Bits 31:29 Reserved, must be kept at reset valuer

Bits 28:16 **CFBP[12:0]**: Color Frame Buffer Pitch in bytes
These bits define the pitch which is the increment from the start of one line of pixels to the start of the next line in bytes.

Bits 15:13 Reserved, must be kept at reset value

Bits 12:0 **CFBLL[12:0]**: Color Frame Buffer Line Length
These bits define the length of one line of pixels in bytes + 3.
The line length is computed as follows: Active high width x number of bytes per pixel + 3.

Example:

- A frame buffer having the format RGB565 (2 bytes per pixel) and a width of 256 pixels (total number of bytes per line is 256x2=512 bytes), where pitch = line length requires a value of 0x02000203 to be written into this register.
- A frame buffer having the format RGB888 (3 bytes per pixel) and a width of 320 pixels (total number of bytes per line is 320x3=960), where pitch = line length requires a value of 0x03C003C3 to be written into this register.

16.7.24 LTDC Layerx ColorFrame Buffer Line Number Register (LTDC_LxCFBLNR) (where x=1..2)

This register defines the number of lines in the color frame buffer.

Address offset: 0xB4 + 0x80 x (*Layerx* -1), *Layerx* = 1 or 2

Reset value: 0x0000 0000

31	30	29	28	27	26	25	24	23	22	21	20	19	18	17	16
Reserved															

15	14	13	12	11	10	9	8	7	6	5	4	3	2	1	0
Reserved					CFBLNBR[10:0]										
					rw	rw	rw	rw	rw	rw	rw	rw	rw	rw	rw

Bits 31:11 Reserved, must be kept at reset value

Bits 10:0 **CFBLNBR[10:0]**: Frame Buffer Line Number
These bits define the number of lines in the frame buffer which corresponds to the Active high width.

Note: The number of lines and line length settings define how much data is fetched per frame for every layer. If it is configured to less bytes than required, a FIFO underrun interrupt will be generated if enabled.

The start address and pitch settings on the other hand define the correct start of every line in memory.

16.7.25 LTDC Layerx CLUT Write Register (LTDC_LxCLUTWR) (where x=1..2)

This register defines the CLUT address and the RGB value.

Address offset: 0xC4 + 0x80 x (*Layerx* -1), *Layerx* = 1 or 2

Reset value: 0x0000 0000

31	30	29	28	27	26	25	24	23	22	21	20	19	18	17	16
CLUTADD[7:0]								RED[7:0]							
w	w	w	w	w	w	w	w	w	w	w	w	w	w	w	w
15	14	13	12	11	10	9	8	7	6	5	4	3	2	1	0
GREEN[7:0]								BLUE[7:0]							
w	w	w	w	w	w	w	w	w	w	w	w	w	w	w	w

Bits 31:24 **CLUTADD[7:0]**: CLUT Address
These bits configure the CLUT address (color position within the CLUT) of each RGB value

Bits 23:16 **RED[7:0]**: Red value
These bits configure the red value

Bits 15:8 **GREEN[7:0]**: Green value
These bits configure the green value

Bits 7:0 **BLUE[7:0]**: Blue value
These bits configure the blue value

*Note: The CLUT write register should only be configured during blanking period or if the layer is disabled. The CLUT can be enabled or disabled in the **LTDC_LxCR** register.*

The CLUT is only meaningful for L8, AL44 and AL88 pixel format.

16.7.26 LTDC register map

The following table summarizes the LTDC registers. Refer to the register boundary addresses table for the LTDC register base address.

Table 92. LTDC register map and reset values

Offset	Register	31	30	29	28	27	26	25	24	23	22	21	20	19	18	17	16	15	14	13	12	11	10	9	8	7	6	5	4	3	2	1	0
0x0008	LTDC_SSCR	Reserved						HSW[9:0]										Reserved					VSH[10:0]										
	Reset value							0	0	0	0	0	0	0	0	0	0						0	0	0	0	0	0	0	0	0	0	0
0x000C	LTDC_BPCR	Reserved				AHBP[11:0]												Reserved					AVBP[10:0]										
	Reset value					0	0	0	0	0	0	0	0	0	0	0	0						0	0	0	0	0	0	0	0	0	0	0
0x0010	LTDC_AWCR	Reserved				AAV[11:0]												Reserved					AAH[10:0]										
	Reset value					0	9	0	0	0	0	0	0	0	0	0	0						0	0	0	0	0	0	0	0	0	0	0
0x0014	LTDC_TWCR	Reserved				TOTALW[11:0]												Reserved					TOTALH[10:0]										
	Reset value					0	0	0	0	0	0	0	0	0	0	0	0						0	0	0	0	0	0	0	0	0	0	0
0x0018	LTDC_GCR	HSPOL	VSPOL	DEPOL	PCPOL	Reserve											DEN	Reserved	DRW[2:0]			Reserved	DGW[2:0]			Reserved	DBW[2:0]			Reserved			LTDCEN
	Reset value	0	0	0	0												0		0	1	0		0	1	0		0	1	0				0
0x0024	LTDC_SRCR	Reserved																														VBR	IMR
	Reset value																															0	0
0x002C	LTDC_BCCR	Reserved								BC[23:0]																							
	Reset value									0	0	0	0	0	0	0	0	0	0	0	0	0	0	0	0	0	0	0	0	0	0	0	0
0x0034	LTDC_IER	Reserved																												RRIE	TERRIE	FUIE	LIE
	Reset value																													0	0	0	0
0x0038	LTDC_ISR	Reserved																												RRIF	TERRIF	FUIF	LIF
	Reset value																													0	0	0	0
0x003C	LTDC_ICR	Reserved																												CRRIF	CTERRIF	CFUIF	CLIF
	Reset value																													0	0	0	0
0x0040	LTDC_LIPCR	Reserved																					LIPOS[10:0]										
	Reset value																						0	0	0	0	0	0	0	0	0	0	0
0x0044	LTDC_CPSR	CXPOS[15:0]																CYPOS[15:0]															
	Reset value	0	0	0	0	0	0	0	0	0	0	0	0	0	0	0	0	0	0	0	0	0	0	0	0	0	0	0	0	0	0	0	0
0x0048	LTDC_CDSR	Reserved																												HSYNCS	VSYNCS	HDES	VDES
	Reset value																													1	1	1	1
0x0084	LTDC_L1CR	Reserved																											CLUTEN	Reserved		COLKEN	LEN
	Reset value																												0			0	0
0x0088	LTDC_L1WHPCR	Reserved				WHSPPOS[11:0]												Reserved				WHSTPOS[11:0]											
	Reset value					0	0	0	0	0	0	0	0	0	0	0	0						0	0	0	0	0	0	0	0	0	0	0

Table 92. LTDC register map and reset values (continued)

Offset	Register	31	30	29	28	27	26	25	24	23	22	21	20	19	18	17	16	15	14	13	12	11	10	9	8	7	6	5	4	3	2	1	0
0x008C	LTDC_L1WVPCR	Reserved					WVSPPOS[10:0]											Reserved					WVSTPOS[10:0]										
	Reset value						0	0	0	0	0	0	0	0	0	0	0						0	0	0	0	0	0	0	0	0	0	0
0x0090	LTDC_L1CKCR	Reserved								CKRED[7:0]								CKGREEN[7:0]								CKBLUE[7:0]							
	Reset value									0	0	0	0	0	0	0	0	0	0	0	0	0	0	0	0	0	0	0	0	0	0	0	0
0x0094	LTDC_L1PFCR	Reserved																														PF[2:0]	
	Reset value																															0	0	0
0x0098	LTDC_L1CACR	Reserved																								CONSTA[7:0]							
	Reset value																									1	1	1	1	1	1	1	1
0x009C	LTDC_L1DCCR	DCALPHA[7:0]								DCRED[7:0]								DCGREEN[7:0]								DCBLUE[7:0]							
	Reset value	0	0	0	0	0	0	0	0	0	0	0	0	0	0	0	0	0	0	0	0	0	0	0	0	0	0	0	0	0	0	0	0
0x00A0	LTDC_L1BFCR	Reserved																					BF1[2:0]			Reserved						BF2[2:0]	
	Reset value																						1	1	0							1	1	1
0x00AC	LTDC_L1CFBAR	CFBADD[31:0]																															
	Reset value	0	0	0	0	0	0	0	0	0	0	0	0	0	0	0	0	0	0	0	0	0	0	0	0	0	0	0	0	0	0	0	0
0x00B0	LTDC_L1CFBLR	Reserved			CFBP[12:0]													Reserved			CFBLL[12:0]												
	Reset value				0	0	0	0	0	0	0	0	0	0	0	0	0				0	0	0	0	0	0	0	0	0	0	0	0	0
0x00B4	LTDC_L1CFBLNR	Reserved																					CFBLNBR[10:0]										
	Reset value																						0	0	0	0	0	0	0	0	0	0	0
0x00C4	LTDC_L1CLUTWR	CLUTADD[7:0]								RED[7:0]								GREEN[7:0]								BLUE[7:0]							
	Reset value	0	0	0	0	0	0	0	0	0	0	0	0	0	0	0	0	0	0	0	0	0	0	0	0	0	0	0	0	0	0	0	0
0x0104	LTDC_L2CR	Reserved																											CLUTEN	Reserved		COLKEN	LEN
	Reset value																												0			0	0
0x0108	LTDC_L2WHPCR	Reserved			WHSPPOS[11:0]													Reserved					WHSTPOS[11:0]										
	Reset value				0	0	0	0	0	0	0	0	0	0	0	0	0						0	0	0	0	0	0	0	0	0	0	0
0x010C	LTDC_L2WVPCR	Reserved					WVSPPOS[10:0]											Reserved					WVSTPOS[10:0]										
	Reset value						0	0	0	0	0	0	0	0	0	0	0						0	0	0	0	0	0	0	0	0	0	0
0x0110	LTDC_L2CKCR	Reserved								CKRED[7:0]								CKGREEN[7:0]								CKBLUE[7:0]							
	Reset value									0	0	0	0	0	0	0	0	0	0	0	0	0	0	0	0	0	0	0	0	0	0	0	0
0x0114	LTDC_L2PFCR	Reserved																														PF[2:0]	
	Reset value																															0	0	0
0x0118	LTDC_L2CACR	Reserved																								CONSTA[7:0]							
	Reset value																									1	1	1	1	1	1	1	1
0x011C	LTDC_L2DCCR	DCALPHA[7:0]								DCRED[7:0]								DCGREEN[7:0]								DCBLUE[7:0]							
	Reset value	0	0	0	0	0	0	0	0	0	0	0	0	0	0	0	0	0	0	0	0	0	0	0	0	0	0	0	0	0	0	0	0
0x0120	LTDC_L2BFCR	Reserved																					BF1[2:0]			Reserved						BF2[2:0]	
	Reset value																						1	1	0							1	1	1
0x012C	LTDC_L2CFBAR	CFBADD[31:0]																															
	Reset value	0	0	0	0	0	0	0	0	0	0	0	0	0	0	0	0	0	0	0	0	0	0	0	0	0	0	0	0	0	0	0	0
0x0130	LTDC_L2CFBLR	Reserved			CFBP[12:0]													Reserved			CFBLL[12:0]												
	Reset value				0	0	0	0	0	0	0	0	0	0	0	0	0				0	0	0	0	0	0	0	0	0	0	0	0	0

Table 92. LTDC register map and reset values (continued)

Offset	Register	31	30	29	28	27	26	25	24	23	22	21	20	19	18	17	16	15	14	13	12	11	10	9	8	7	6	5	4	3	2	1	0
0x0134	LTDC_L2CFBLNR	Reserved																					CFBLNBR[10:0]										
	Reset value																						0	0	0	0	0	0	0	0	0	0	0
0x0144	LTDC_L2CLUTWR	CLUTADD[7:0]								RED[7:0]								GREEN[7:0]								BLUE[7:0]							
	Reset value	0	0	0	0	0	0	0	0	0	0	0	0	0	0	0	0	0	0	0	0	0	0	0	0	0	0	0	0	0	0	0	0

17 Advanced-control timers (TIM1 and TIM8)

This section applies to the whole STM32F4xx family, unless otherwise specified.

17.1 TIM1 and TIM8 introduction

The advanced-control timers (TIM1 and TIM8) consist of a 16-bit auto-reload counter driven by a programmable prescaler.

It may be used for a variety of purposes, including measuring the pulse lengths of input signals (input capture) or generating output waveforms (output compare, PWM, complementary PWM with dead-time insertion).

Pulse lengths and waveform periods can be modulated from a few microseconds to several milliseconds using the timer prescaler and the RCC clock controller prescalers.

The advanced-control (TIM1 and TIM8) and general-purpose (TIMx) timers are completely independent, and do not share any resources. They can be synchronized together as described in *Section 17.3.20*.

17.2 TIM1 and TIM8 main features

TIM1 and TIM8 timer features include:

- 16-bit up, down, up/down auto-reload counter.
- 16-bit programmable prescaler allowing dividing (also “on the fly”) the counter clock frequency either by any factor between 1 and 65536.
- Up to 4 independent channels for:
  - Input Capture
  - Output Compare
  - PWM generation (Edge and Center-aligned Mode)
  - One-pulse mode output
- Complementary outputs with programmable dead-time
- Synchronization circuit to control the timer with external signals and to interconnect several timers together.
- Repetition counter to update the timer registers only after a given number of cycles of the counter.
- Break input to put the timer’s output signals in reset state or in a known state.
- Interrupt/DMA generation on the following events:
  - Update: counter overflow/underflow, counter initialization (by software or internal/external trigger)
  - Trigger event (counter start, stop, initialization or count by internal/external trigger)
  - Input capture
  - Output compare
  - Break input
- Supports incremental (quadrature) encoder and hall-sensor circuitry for positioning purposes
- Trigger input for external clock or cycle-by-cycle current management

Figure 86. Advanced-control timer block diagram

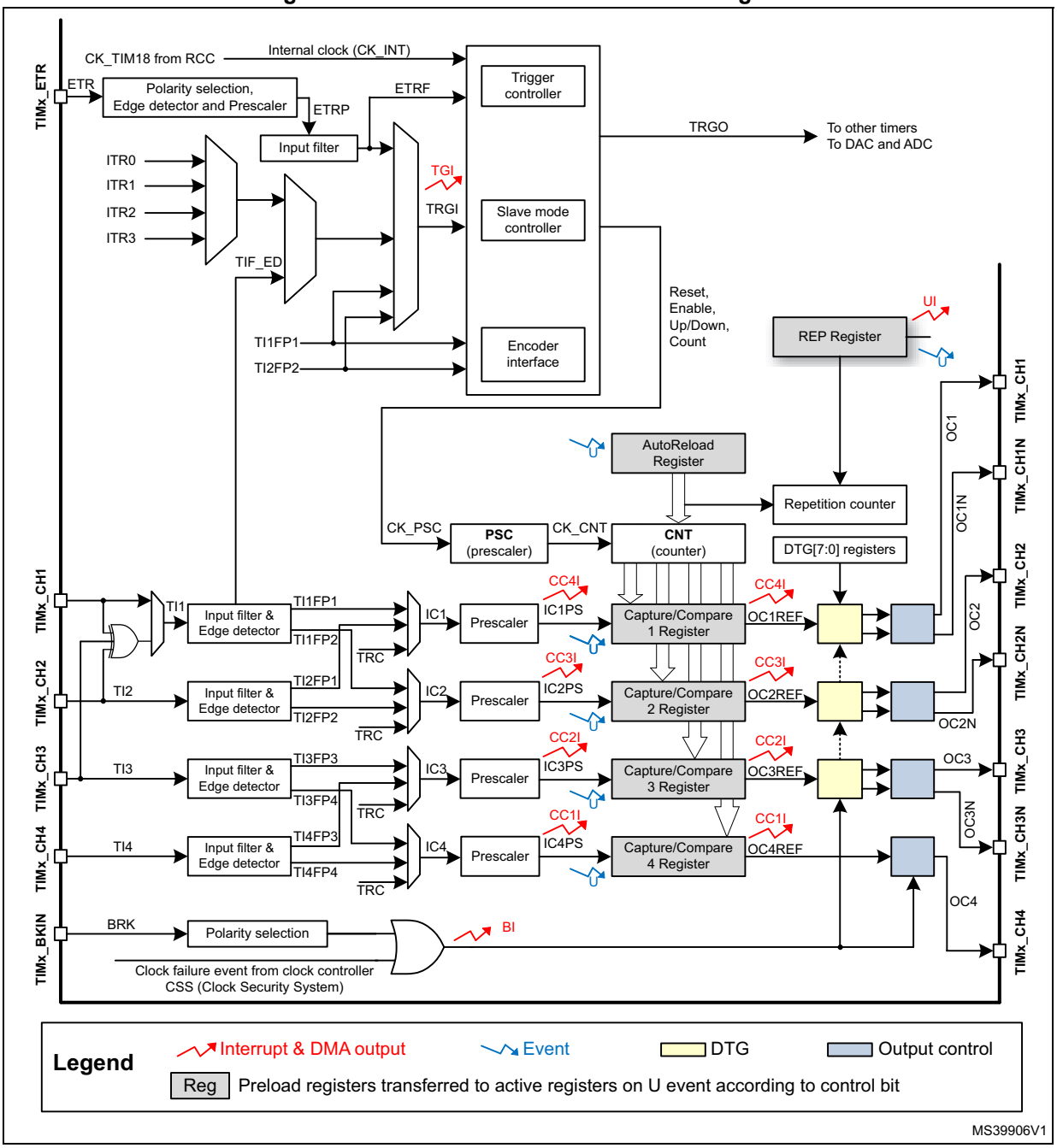

17.3 TIM1 and TIM8 functional description

17.3.1 Time-base unit

The main block of the programmable advanced-control timer is a 16-bit counter with its related auto-reload register. The counter can count up, down or both up and down. The counter clock can be divided by a prescaler.

The counter, the auto-reload register and the prescaler register can be written or read by software. This is true even when the counter is running.

The time-base unit includes:

- Counter register (TIMx_CNT)
- Prescaler register (TIMx_PSC)
- Auto-reload register (TIMx_ARR)
- Repetition counter register (TIMx_RCR)

The auto-reload register is preloaded. Writing to or reading from the auto-reload register accesses the preload register. The content of the preload register are transferred into the shadow register permanently or at each update event (UEV), depending on the auto-reload preload enable bit (ARPE) in TIMx_CR1 register. The update event is sent when the counter reaches the overflow (or underflow when downcounting) and if the UDIS bit equals 0 in the TIMx_CR1 register. It can also be generated by software. The generation of the update event is described in detailed for each configuration.

The counter is clocked by the prescaler output CK_CNT, which is enabled only when the counter enable bit (CEN) in TIMx_CR1 register is set (refer also to the slave mode controller description to get more details on counter enabling).

Note that the counter starts counting 1 clock cycle after setting the CEN bit in the TIMx_CR1 register.

Prescaler description

The prescaler can divide the counter clock frequency by any factor between 1 and 65536. It is based on a 16-bit counter controlled through a 16-bit register (in the TIMx_PSC register). It can be changed on the fly as this control register is buffered. The new prescaler ratio is taken into account at the next update event.

Figure 87 and *Figure 88* give some examples of the counter behavior when the prescaler ratio is changed on the fly:

Figure 87. Counter timing diagram with prescaler division change from 1 to 2

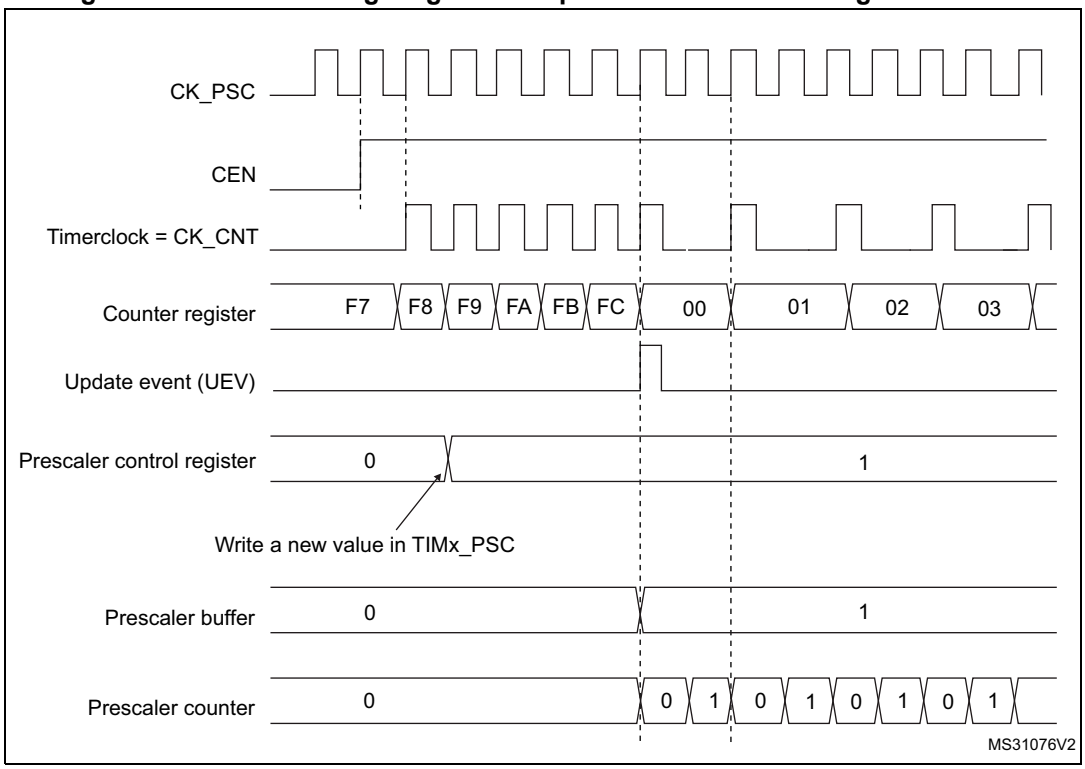

Figure 88. Counter timing diagram with prescaler division change from 1 to 4

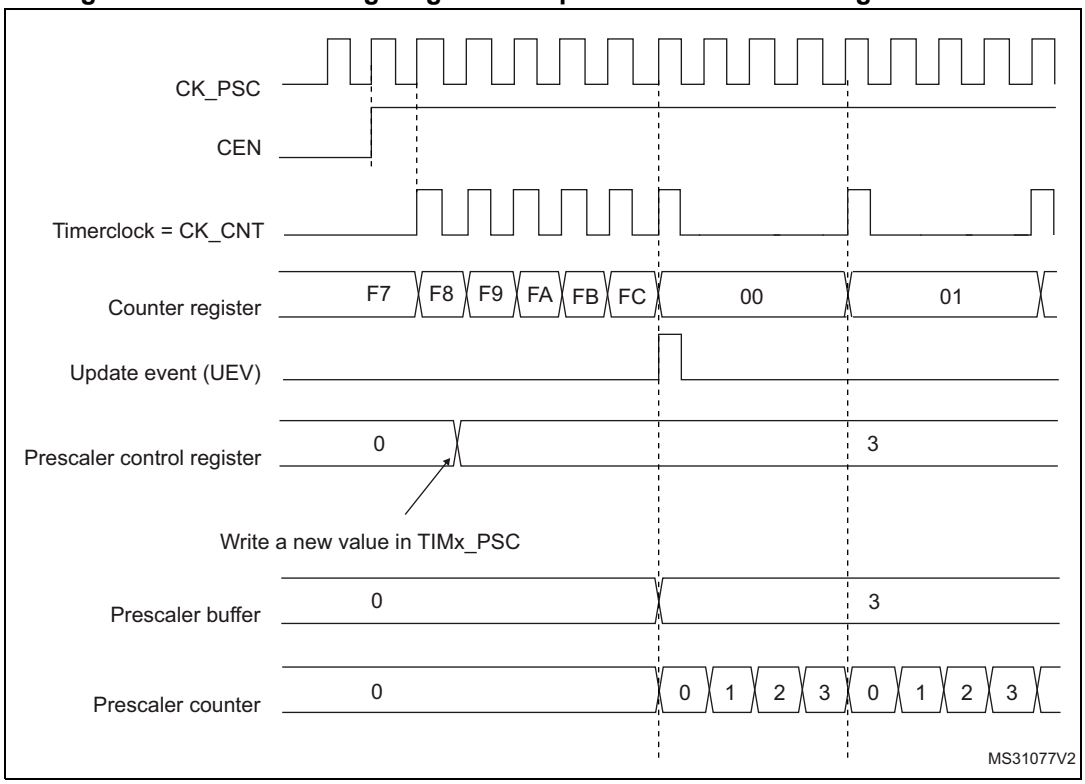

17.3.2 Counter modes

Upcounting mode

In upcounting mode, the counter counts from 0 to the auto-reload value (content of the TIMx_ARR register), then restarts from 0 and generates a counter overflow event.

If the repetition counter is used, the update event (UEV) is generated after upcounting is repeated for the number of times programmed in the repetition counter register plus one (TIMx_RCR+1). Else the update event is generated at each counter overflow.

Setting the UG bit in the TIMx_EGR register (by software or by using the slave mode controller) also generates an update event.

The UEV event can be disabled by software by setting the UDIS bit in the TIMx_CR1 register. This is to avoid updating the shadow registers while writing new values in the preload registers. Then no update event occurs until the UDIS bit has been written to 0. However, the counter restarts from 0, as well as the counter of the prescaler (but the prescale rate does not change). In addition, if the URS bit (update request selection) in TIMx_CR1 register is set, setting the UG bit generates an update event UEV but without setting the UIF flag (thus no interrupt or DMA request is sent). This is to avoid generating both update and capture interrupts when clearing the counter on the capture event.

When an update event occurs, all the registers are updated and the update flag (UIF bit in TIMx_SR register) is set (depending on the URS bit):

- The repetition counter is reloaded with the content of TIMx_RCR register,
- The auto-reload shadow register is updated with the preload value (TIMx_ARR),
- The buffer of the prescaler is reloaded with the preload value (content of the TIMx_PSC register).

The following figures show some examples of the counter behavior for different clock frequencies when TIMx_ARR=0x36.

Figure 89. Counter timing diagram, internal clock divided by 1

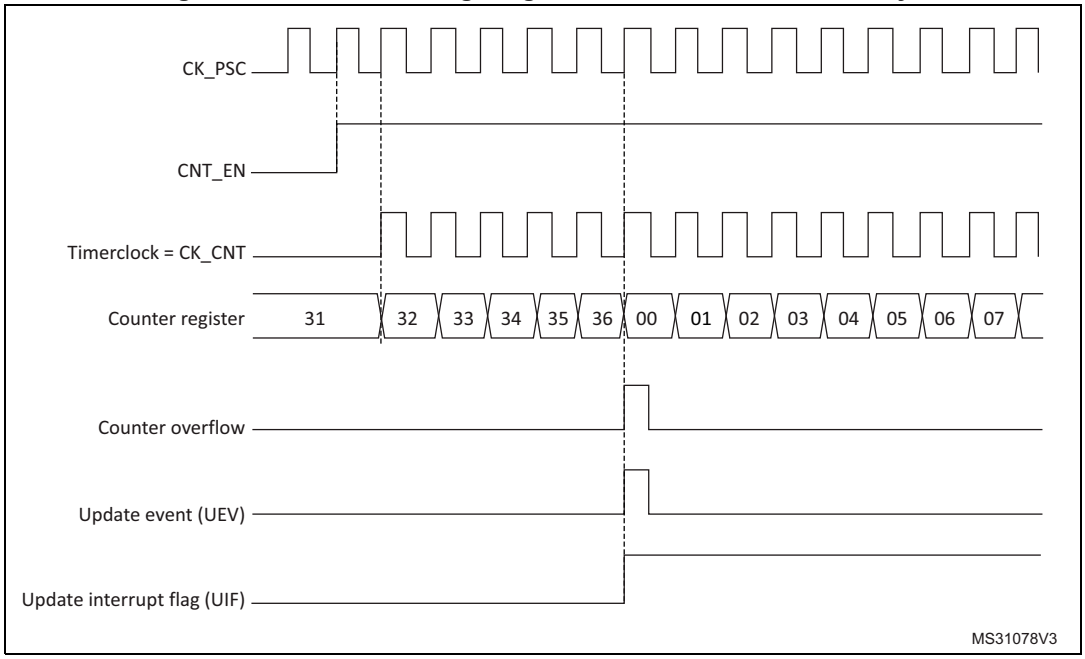

Figure 90. Counter timing diagram, internal clock divided by 2

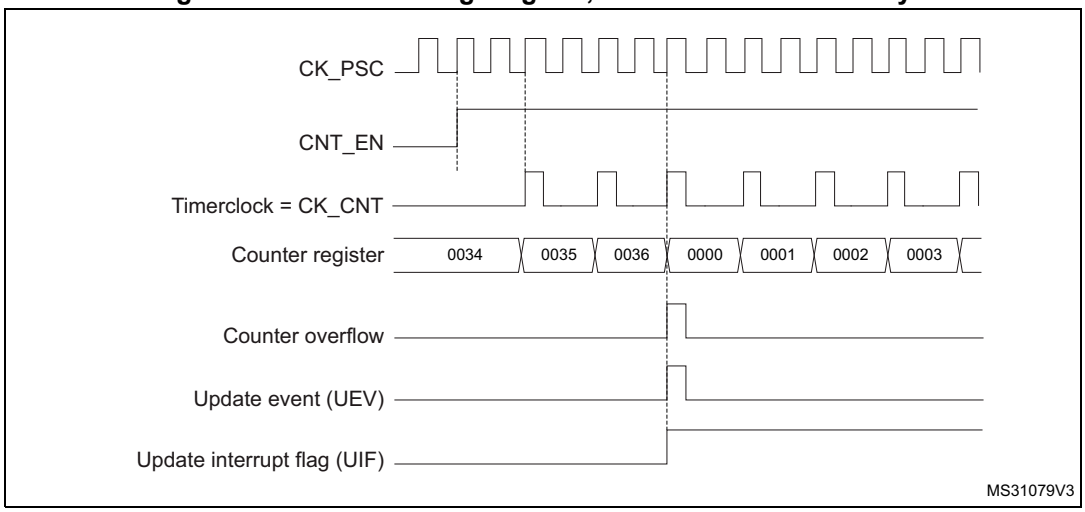

Figure 91. Counter timing diagram, internal clock divided by 4

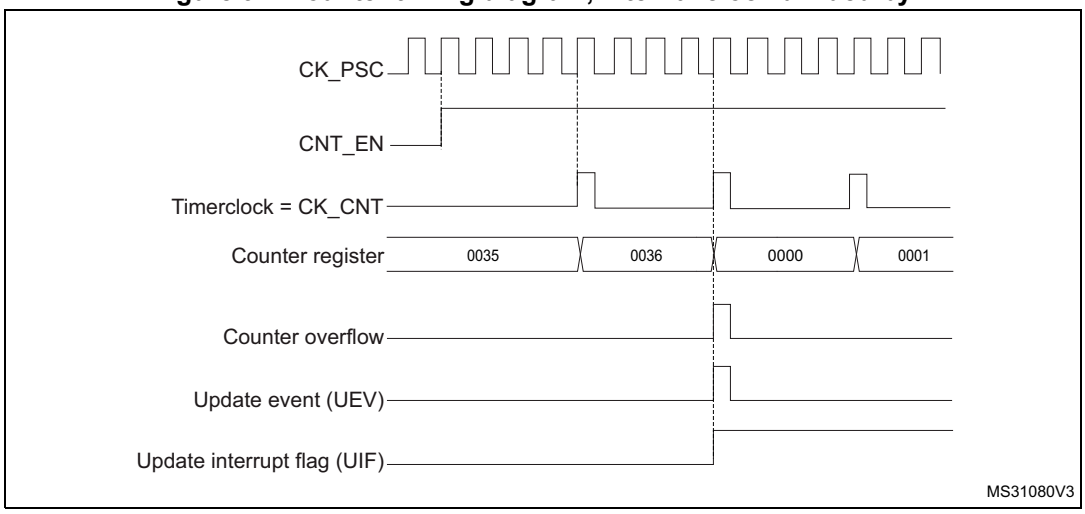

Figure 92. Counter timing diagram, internal clock divided by N

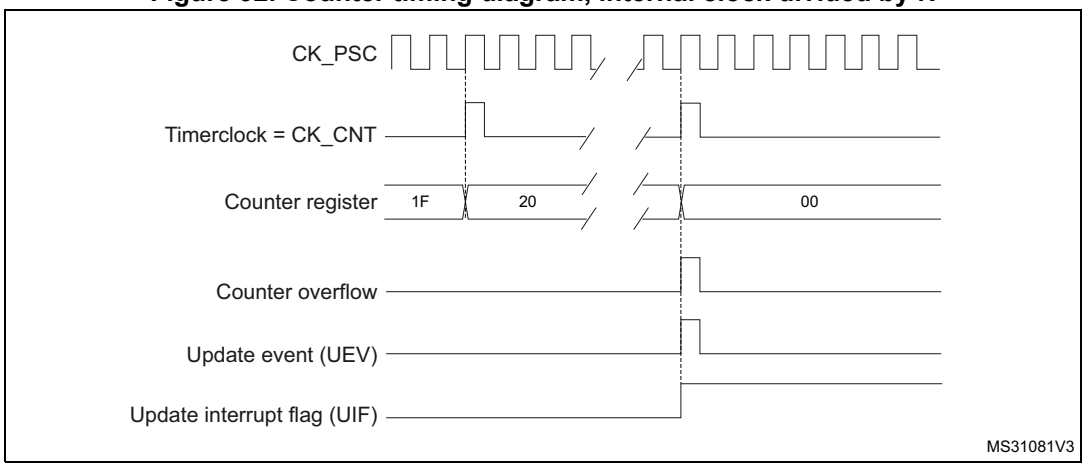

Figure 93. Counter timing diagram, update event when ARPE=0 (TIMx_ARR not preloaded)

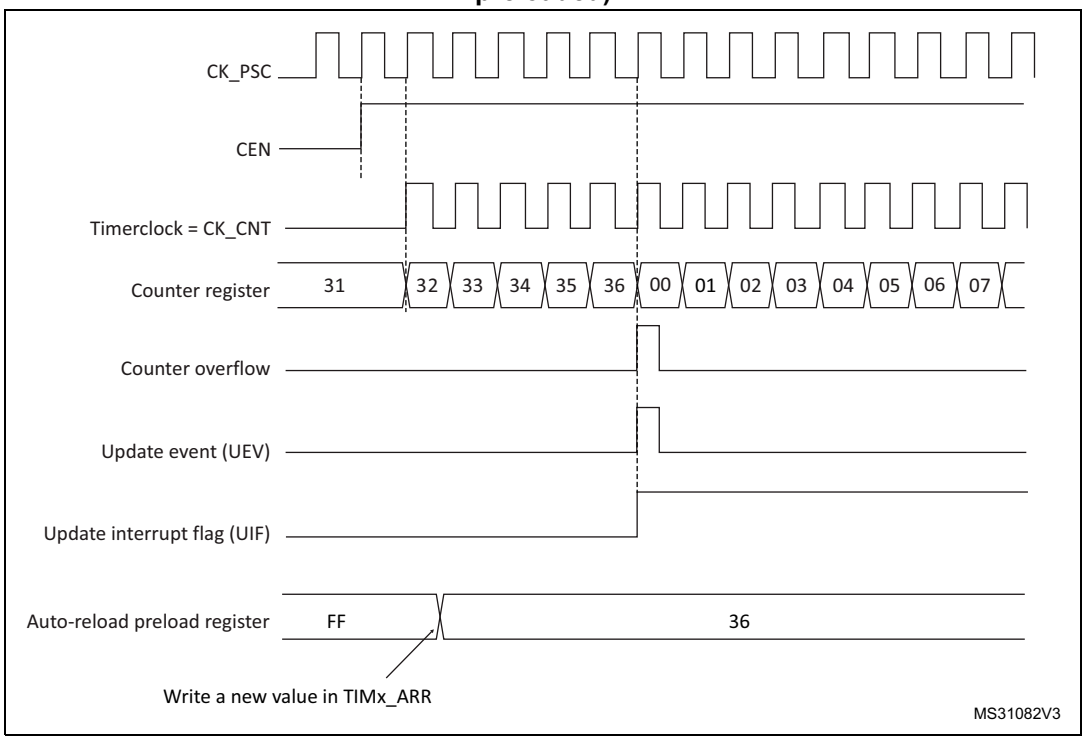

Figure 94. Counter timing diagram, update event when ARPE=1 (TIMx_ARR preloaded)

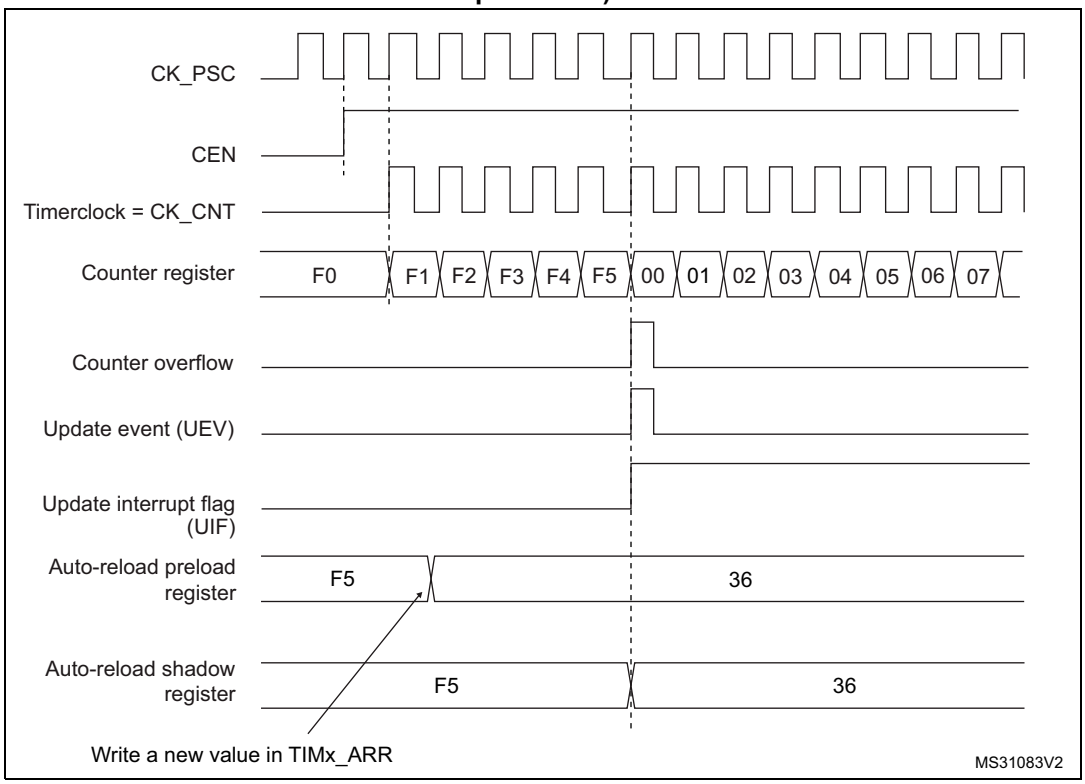

Downcounting mode

In downcounting mode, the counter counts from the auto-reload value (content of the TIMx_ARR register) down to 0, then restarts from the auto-reload value and generates a counter underflow event.

If the repetition counter is used, the update event (UEV) is generated after downcounting is repeated for the number of times programmed in the repetition counter register plus one (TIMx_RCR+1). Else the update event is generated at each counter underflow.

Setting the UG bit in the TIMx_EGR register (by software or by using the slave mode controller) also generates an update event.

The UEV update event can be disabled by software by setting the UDIS bit in TIMx_CR1 register. This is to avoid updating the shadow registers while writing new values in the preload registers. Then no update event occurs until UDIS bit has been written to 0. However, the counter restarts from the current auto-reload value, whereas the counter of the prescaler restarts from 0 (but the prescale rate doesn't change).

In addition, if the URS bit (update request selection) in TIMx_CR1 register is set, setting the UG bit generates an update event UEV but without setting the UIF flag (thus no interrupt or DMA request is sent). This is to avoid generating both update and capture interrupts when clearing the counter on the capture event.

When an update event occurs, all the registers are updated and the update flag (UIF bit in TIMx_SR register) is set (depending on the URS bit):

- The repetition counter is reloaded with the content of TIMx_RCR register
- The buffer of the prescaler is reloaded with the preload value (content of the TIMx_PSC register)
- The auto-reload active register is updated with the preload value (content of the TIMx_ARR register). Note that the auto-reload is updated before the counter is reloaded, so that the next period is the expected one

The following figures show some examples of the counter behavior for different clock frequencies when TIMx_ARR=0x36.

Figure 95. Counter timing diagram, internal clock divided by 1

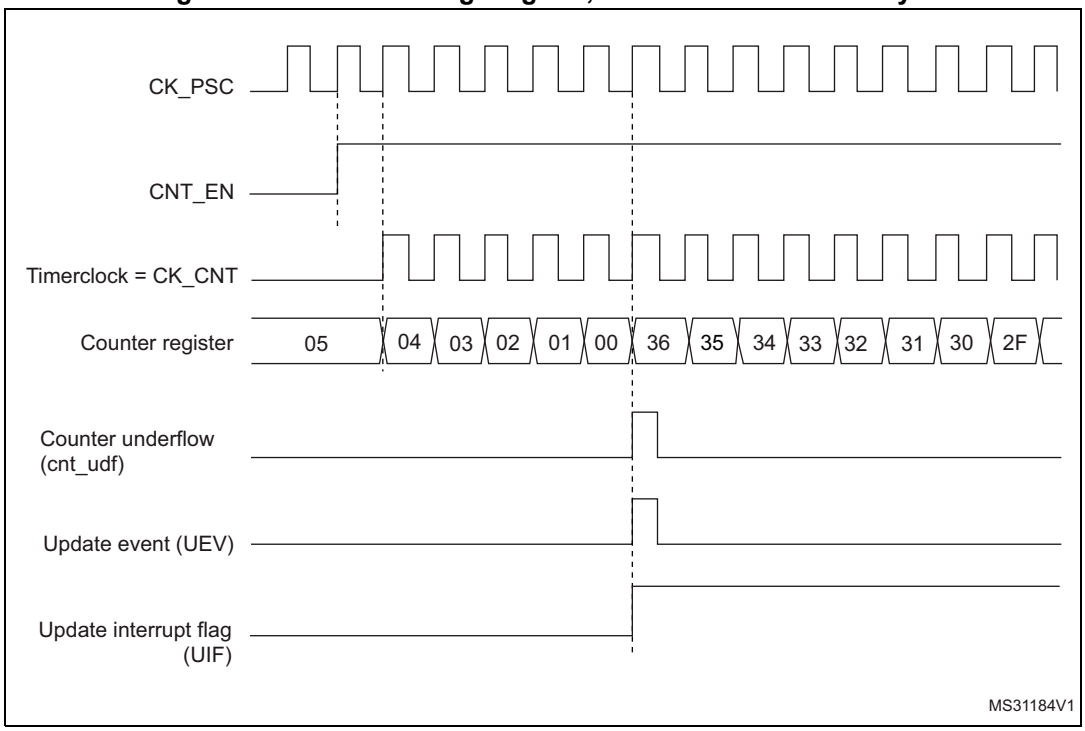

Figure 96. Counter timing diagram, internal clock divided by 2

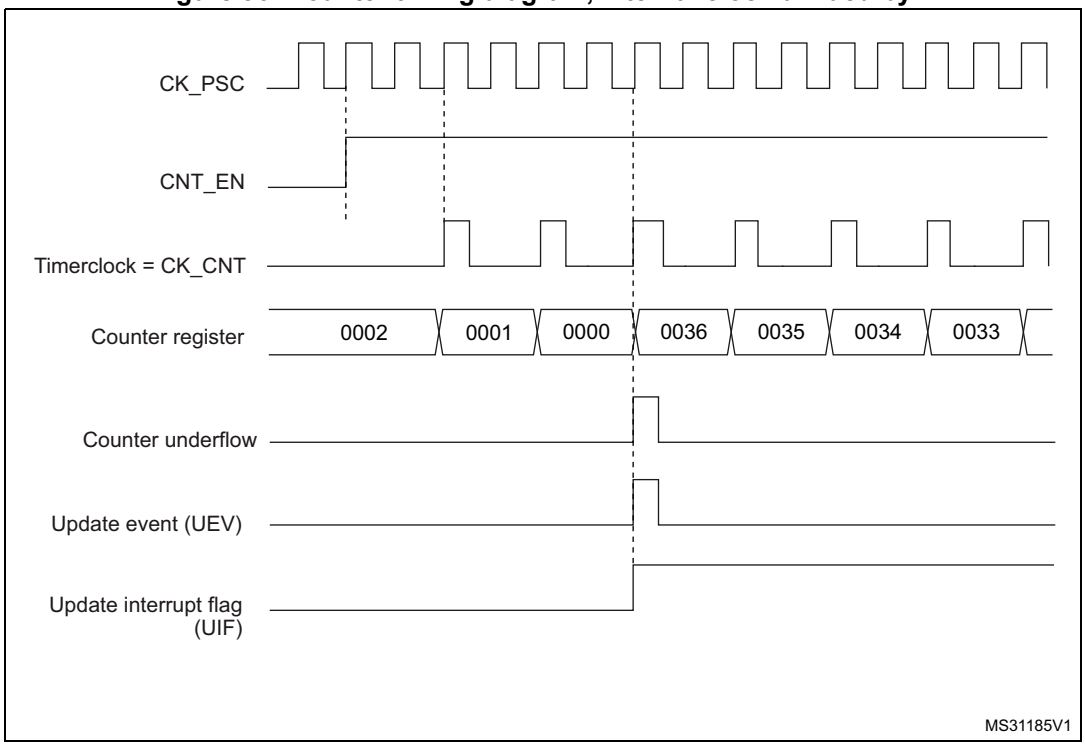

Figure 97. Counter timing diagram, internal clock divided by 4

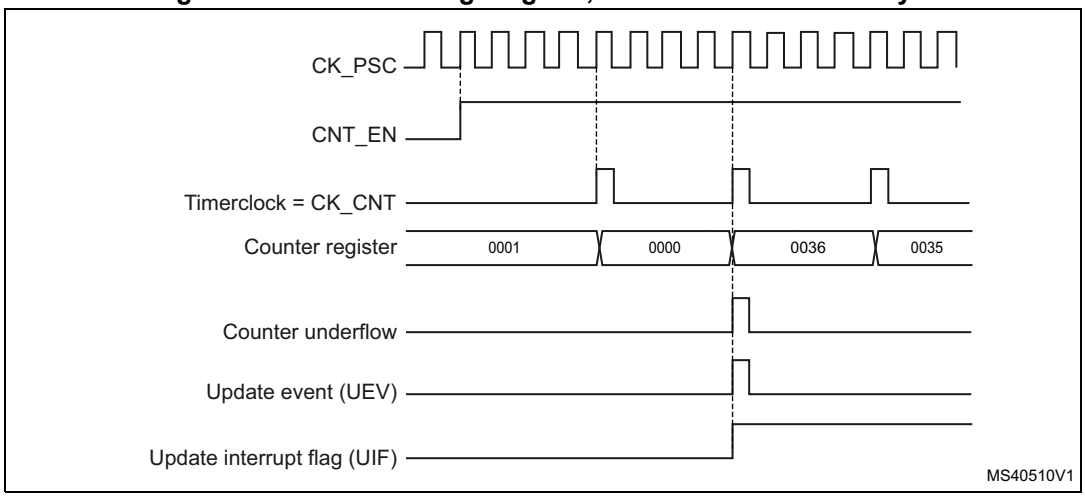

Figure 98. Counter timing diagram, internal clock divided by N

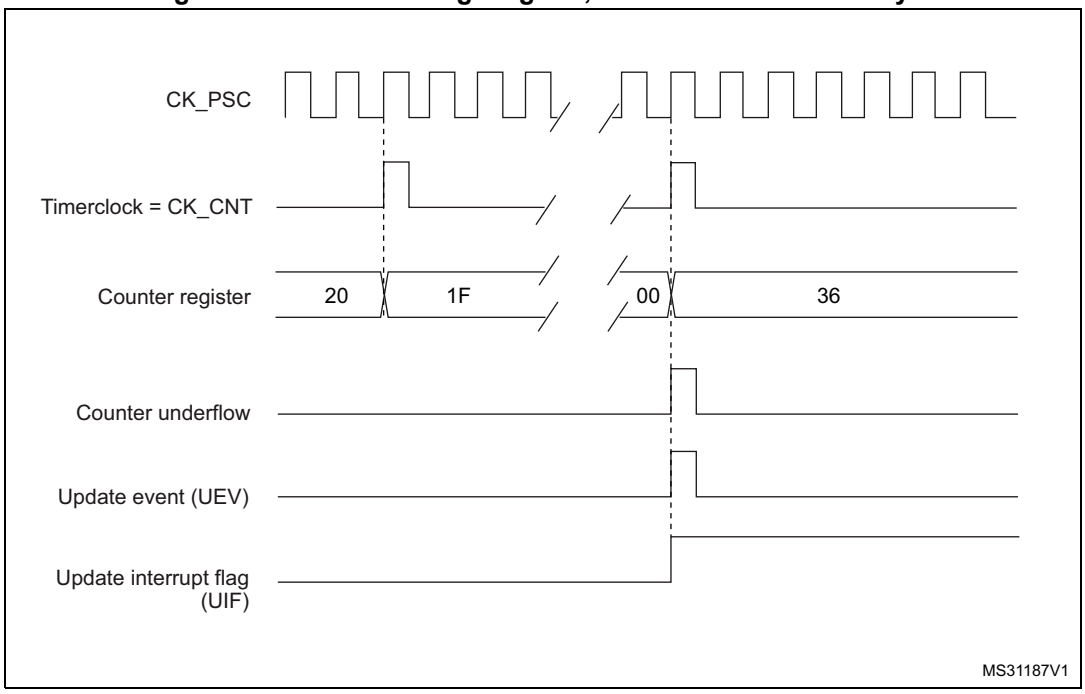

Figure 99. Counter timing diagram, update event when repetition counter is not used

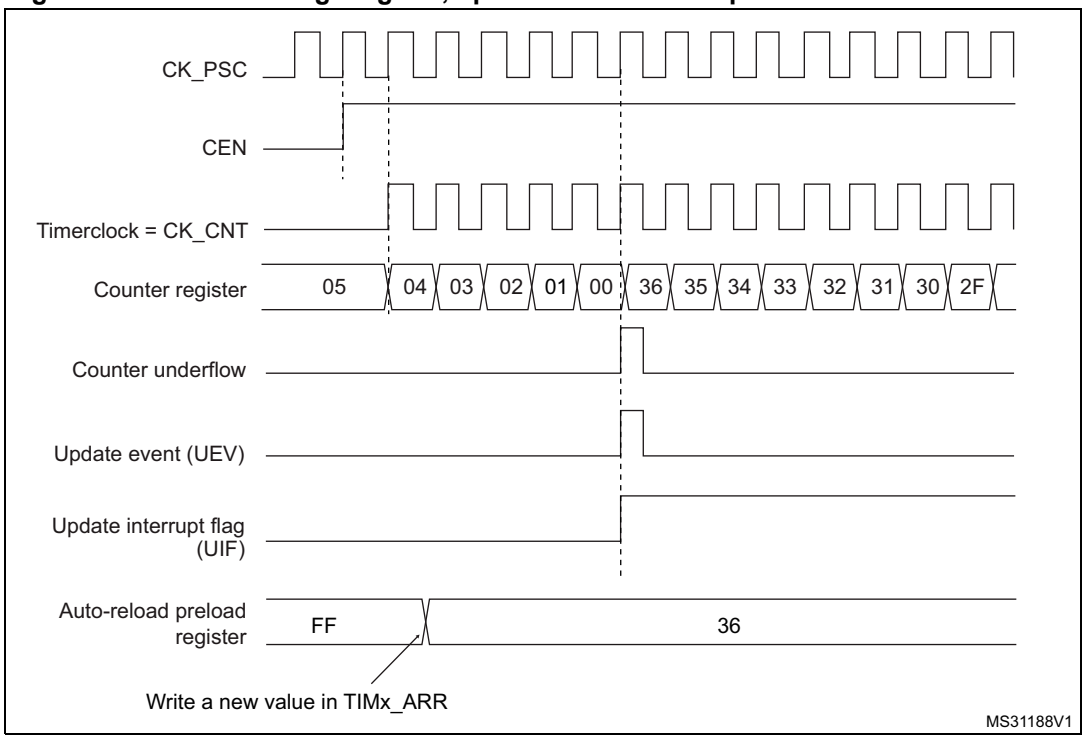

Center-aligned mode (up/down counting)

In center-aligned mode, the counter counts from 0 to the auto-reload value (content of the TIMx_ARR register) – 1, generates a counter overflow event, then counts from the auto-reload value down to 1 and generates a counter underflow event. Then it restarts counting from 0.

Center-aligned mode is active when the CMS bits in TIMx_CR1 register are not equal to '00'. The Output compare interrupt flag of channels configured in output is set when: the counter counts down (Center aligned mode 1, CMS = "01"), the counter counts up (Center aligned mode 2, CMS = "10") the counter counts up and down (Center aligned mode 3, CMS = "11").

In this mode, the DIR direction bit in the TIMx_CR1 register cannot be written. It is updated by hardware and gives the current direction of the counter.

The update event can be generated at each counter overflow and at each counter underflow or by setting the UG bit in the TIMx_EGR register (by software or by using the slave mode controller) also generates an update event. In this case, the counter restarts counting from 0, as well as the counter of the prescaler.

The UEV update event can be disabled by software by setting the UDIS bit in the TIMx_CR1 register. This is to avoid updating the shadow registers while writing new values in the preload registers. Then no update event occurs until UDIS bit has been written to 0. However, the counter continues counting up and down, based on the current auto-reload value.

In addition, if the URS bit (update request selection) in TIMx_CR1 register is set, setting the UG bit generates an UEV update event but without setting the UIF flag (thus no interrupt or DMA request is sent). This is to avoid generating both update and capture interrupts when clearing the counter on the capture event.

When an update event occurs, all the registers are updated and the update flag (UIF bit in TIMx_SR register) is set (depending on the URS bit):

- The repetition counter is reloaded with the content of TIMx_RCR register
- The buffer of the prescaler is reloaded with the preload value (content of the TIMx_PSC register)
- The auto-reload active register is updated with the preload value (content of the TIMx_ARR register). Note that if the update source is a counter overflow, the auto-reload is updated before the counter is reloaded, so that the next period is the expected one (the counter is loaded with the new value).

The following figures show some examples of the counter behavior for different clock frequencies.

Figure 100. Counter timing diagram, internal clock divided by 1, TIMx_ARR = 0x6

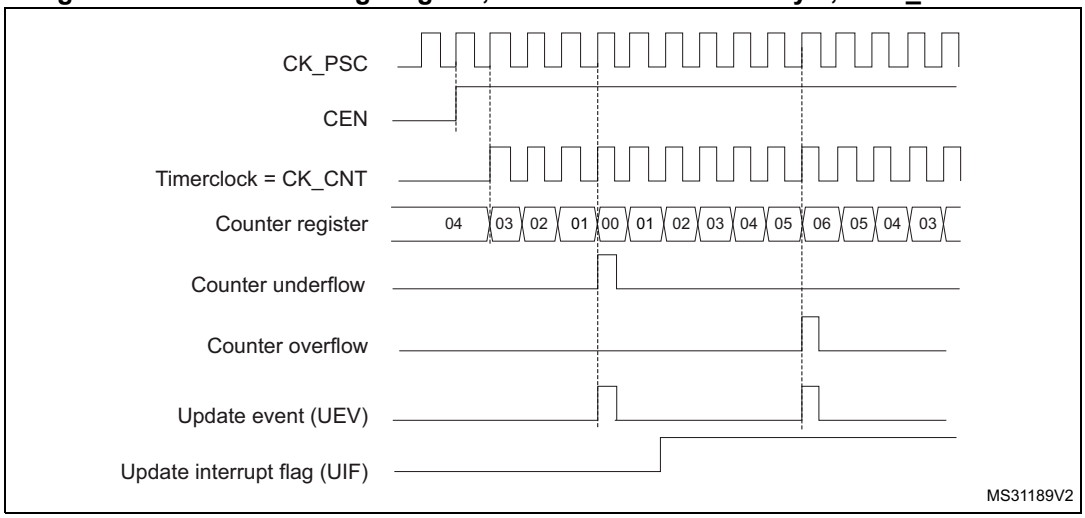

1. Here, center-aligned mode 1 is used (for more details refer to *Section 17.4: TIM1 and TIM8 registers*).

Figure 101. Counter timing diagram, internal clock divided by 2

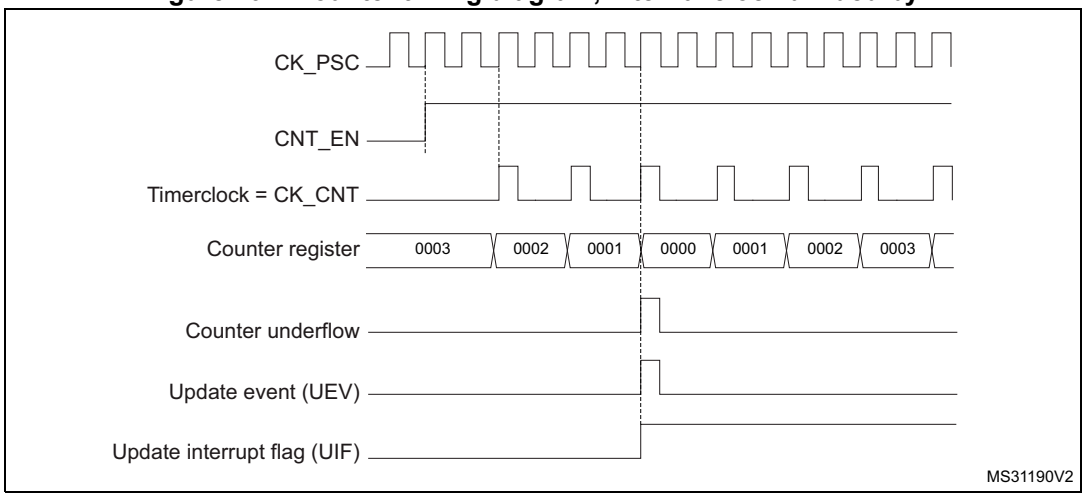

Figure 102. Counter timing diagram, internal clock divided by 4, TIMx_ARR=0x36

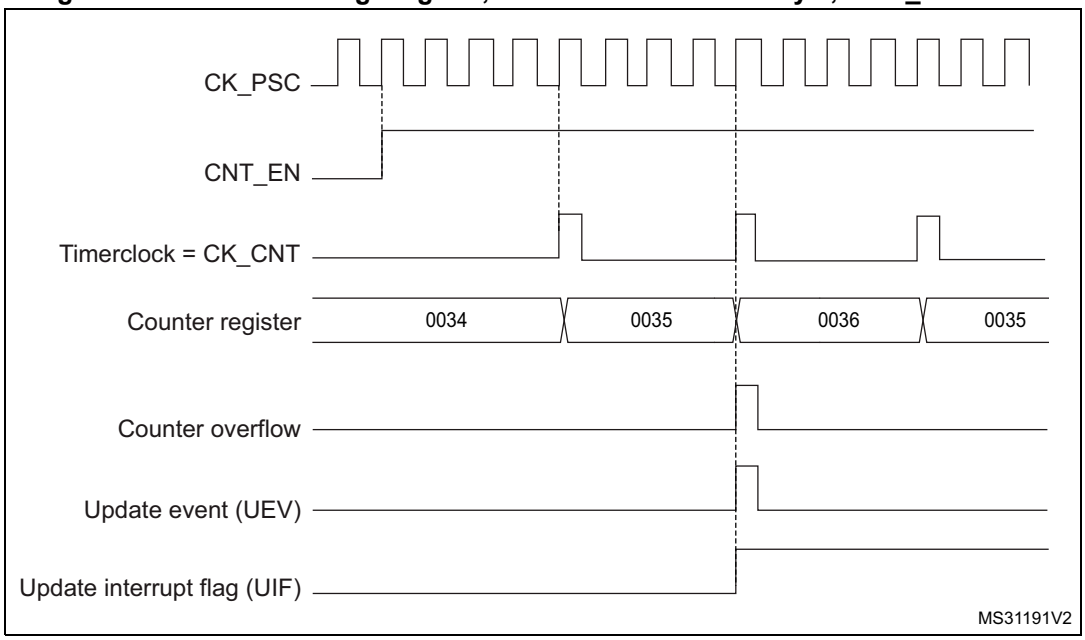

1. Center-aligned mode 2 or 3 is used with an UIF on overflow.

Figure 103. Counter timing diagram, internal clock divided by N

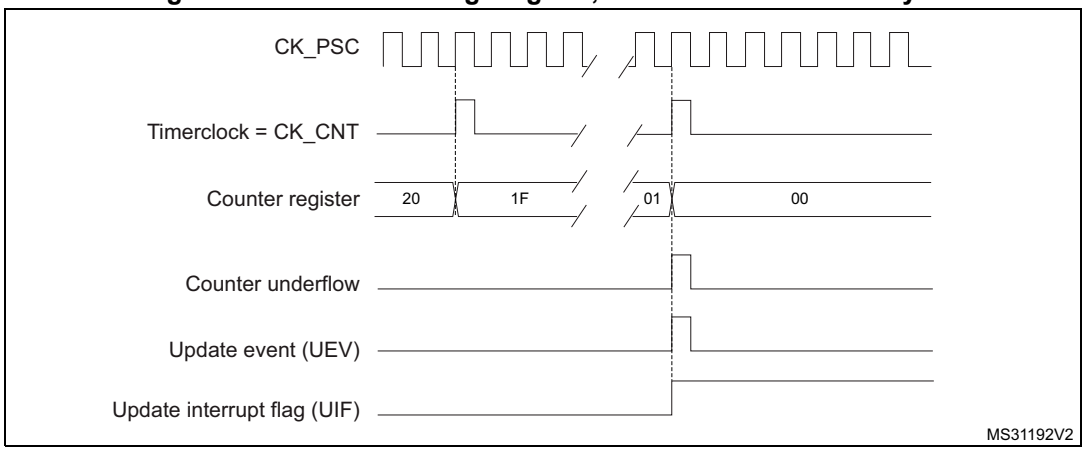

Figure 104. Counter timing diagram, update event with ARPE=1 (counter underflow)

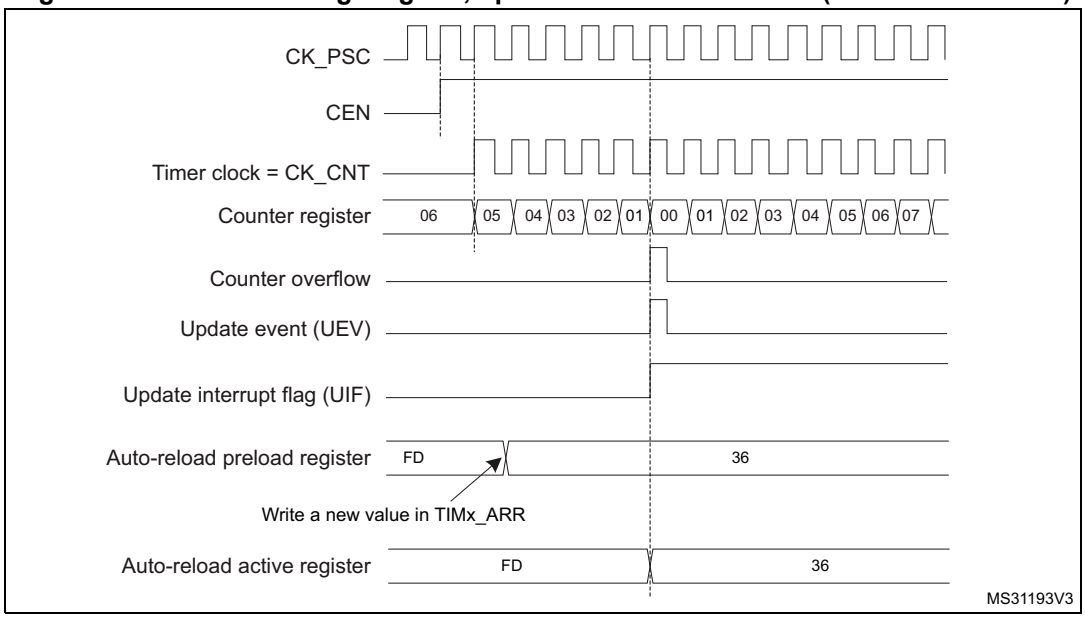

Figure 105. Counter timing diagram, Update event with ARPE=1 (counter overflow)

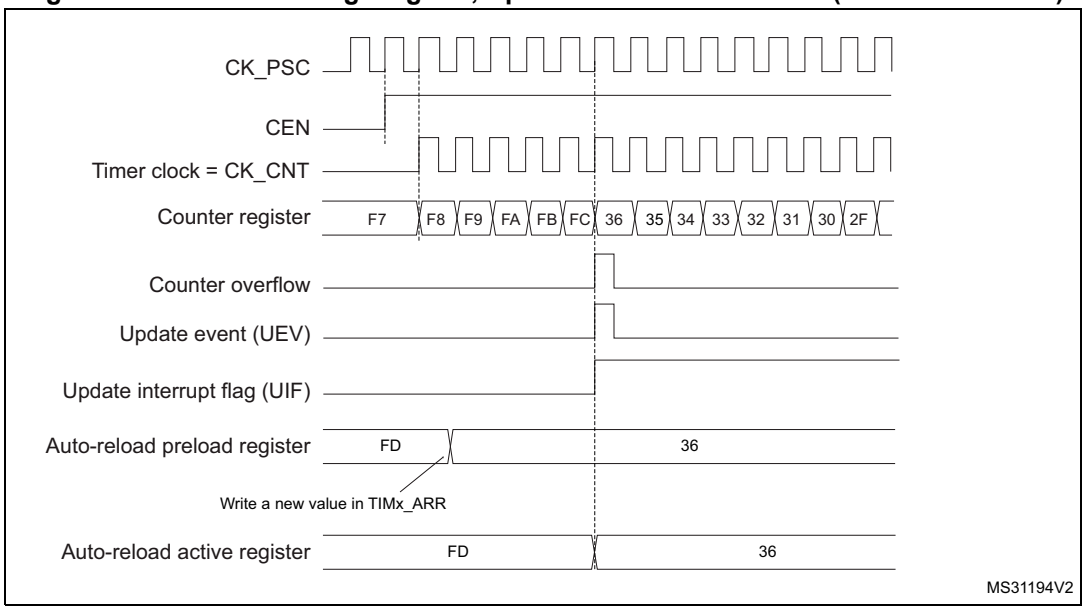

17.3.3 Repetition counter

Section 17.3.1: Time-base unit describes how the update event (UEV) is generated with respect to the counter overflows/underflows. It is actually generated only when the repetition counter has reached zero. This can be useful when generating PWM signals.

This means that data are transferred from the preload registers to the shadow registers (TIMx_ARR auto-reload register, TIMx_PSC prescaler register, but also TIMx_CCRx capture/compare registers in compare mode) every N+1 counter overflows or underflows, where N is the value in the TIMx_RCR repetition counter register.

The repetition counter is decremented:

- At each counter overflow in upcounting mode,
- At each counter underflow in downcounting mode,
- At each counter overflow and at each counter underflow in center-aligned mode. Although this limits the maximum number of repetition to 128 PWM cycles, it makes it possible to update the duty cycle twice per PWM period. When refreshing compare registers only once per PWM period in center-aligned mode, maximum resolution is $2xT_{ck}$, due to the symmetry of the pattern.

The repetition counter is an auto-reload type; the repetition rate is maintained as defined by the TIMx_RCR register value (refer to *Figure 106*). When the update event is generated by software (by setting the UG bit in TIMx_EGR register) or by hardware through the slave mode controller, it occurs immediately whatever the value of the repetition counter is and the repetition counter is reloaded with the content of the TIMx_RCR register.

In center-aligned mode, for odd values of RCR, the update event occurs either on the overflow or on the underflow depending on when the RCR register was written and when the counter was started. If the RCR was written before starting the counter, the UEV occurs on the overflow. If the RCR was written after starting the counter, the UEV occurs on the underflow. For example for RCR = 3, the UEV is generated on each 4th overflow or underflow event depending on when RCR was written.

Figure 106. Update rate examples depending on mode and TIMx_RCR register settings

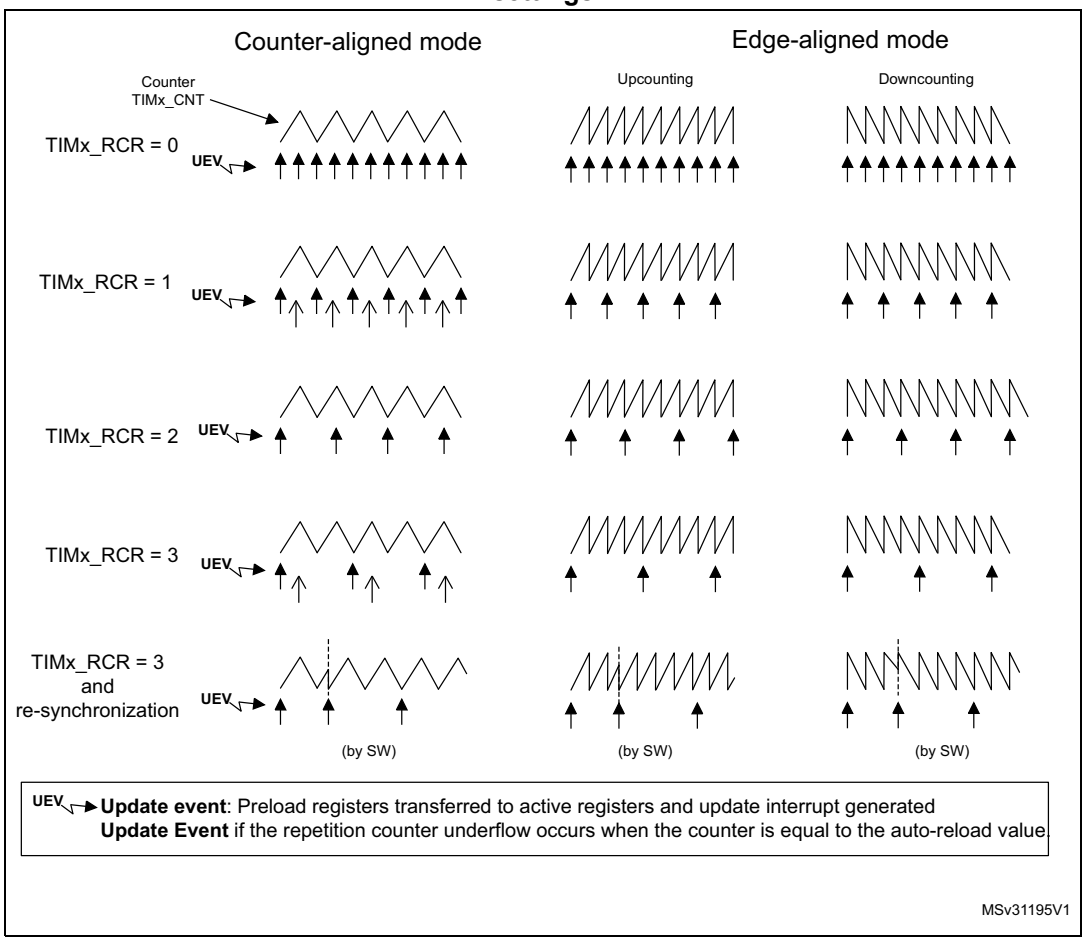

17.3.4 Clock selection

The counter clock can be provided by the following clock sources:

- Internal clock (CK_INT)
- External clock mode1: external input pin
- External clock mode2: external trigger input ETR
- Internal trigger inputs (ITRx): using one timer as prescaler for another timer, for example, the user can configure Timer 1 to act as a prescaler for Timer 2. Refer to *Using one timer as prescaler for another timer* for more details.

Internal clock source (CK_INT)

If the slave mode controller is disabled (SMS=000), then the CEN, DIR (in the TIMx_CR1 register) and UG bits (in the TIMx_EGR register) are actual control bits and can be changed only by software (except UG which remains cleared automatically). As soon as the CEN bit is written to 1, the prescaler is clocked by the internal clock CK_INT.

Figure 107 shows the behavior of the control circuit and the upcounter in normal mode, without prescaler.

Figure 107. Control circuit in normal mode, internal clock divided by 1

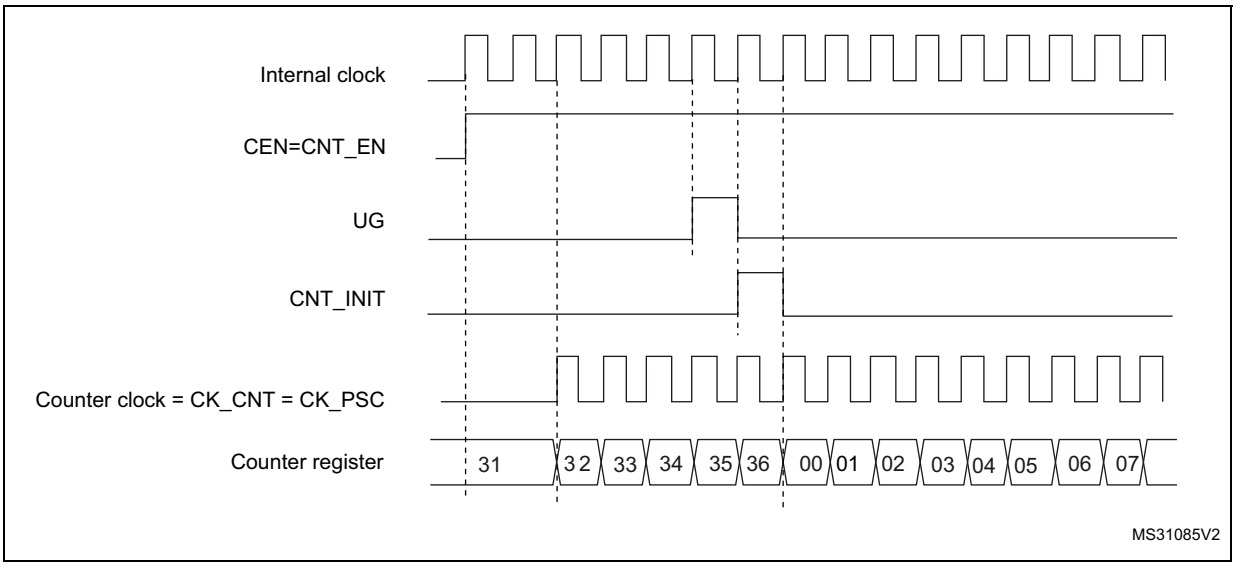

External clock source mode 1

This mode is selected when SMS=111 in the TIMx_SMCR register. The counter can count at each rising or falling edge on a selected input.

Figure 108. TI2 external clock connection example

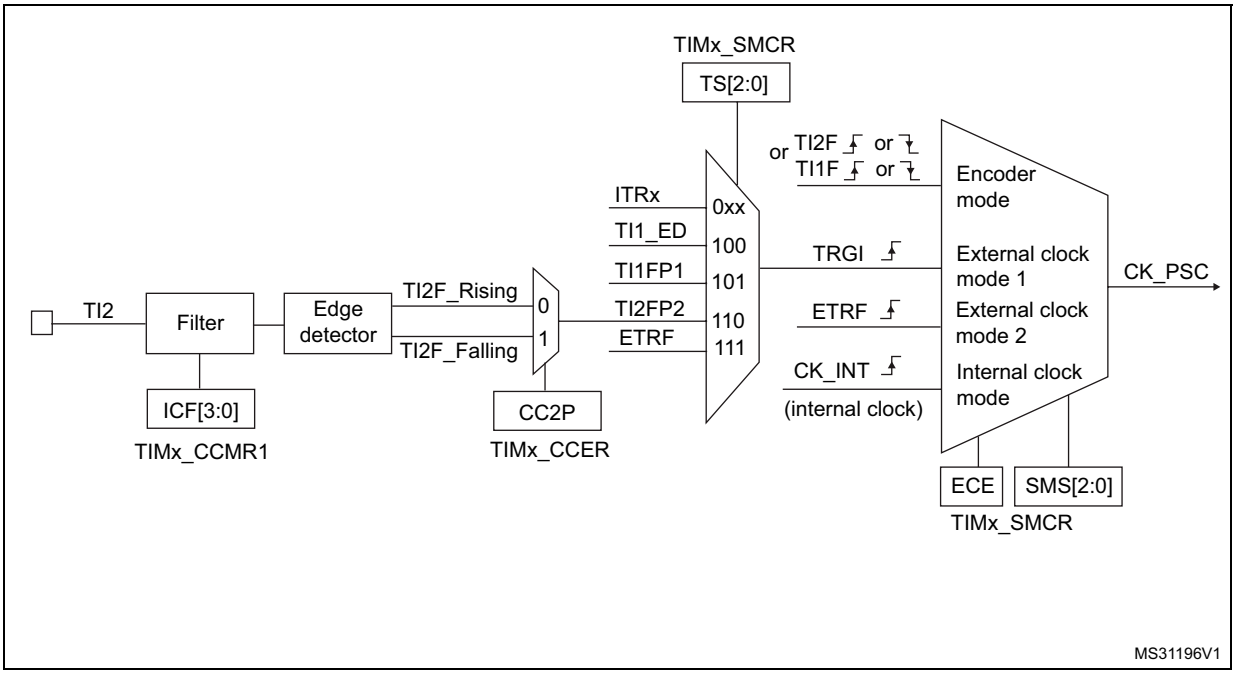

For example, to configure the upcounter to count in response to a rising edge on the TI2 input, use the following procedure:

1. Configure channel 2 to detect rising edges on the TI2 input by writing CC2S = ‘01’ in the TIMx_CCMR1 register.
2. Configure the input filter duration by writing the IC2F[3:0] bits in the TIMx_CCMR1 register (if no filter is needed, keep IC2F=0000).
3. Select rising edge polarity by writing CC2P=0 and CC2NP=0 in the TIMx_CCER register.
4. Configure the timer in external clock mode 1 by writing SMS=111 in the TIMx_SMCR register.
5. Select TI2 as the trigger input source by writing TS=110 in the TIMx_SMCR register.
6. Enable the counter by writing CEN=1 in the TIMx_CR1 register.

Note: The capture prescaler is not used for triggering, so the user does not need to configure it.

When a rising edge occurs on TI2, the counter counts once and the TIF flag is set.

The delay between the rising edge on TI2 and the actual clock of the counter is due to the resynchronization circuit on TI2 input.

Figure 109. Control circuit in external clock mode 1

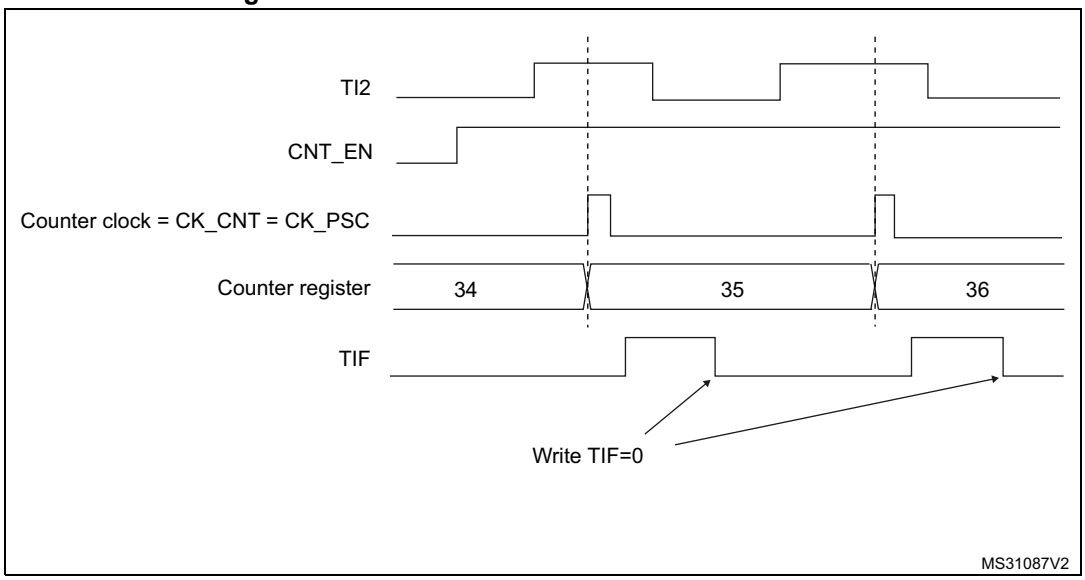

External clock source mode 2

This mode is selected by writing ECE=1 in the TIMx_SMCR register.

The counter can count at each rising or falling edge on the external trigger input ETR.

Figure 110 gives an overview of the external trigger input block.

Figure 110. External trigger input block

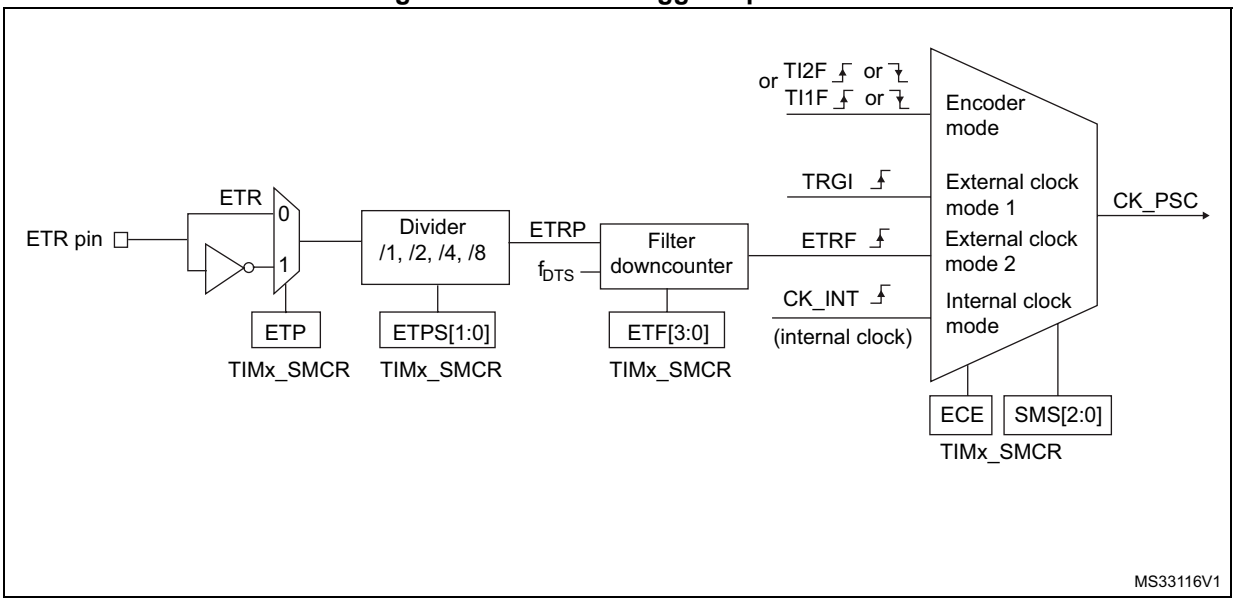

For example, to configure the upcounter to count each 2 rising edges on ETR, use the following procedure:

1. As no filter is needed in this example, write ETF[3:0]=0000 in the TIMx_SMCR register.
2. Set the prescaler by writing ETPS[1:0]=01 in the TIMx_SMCR register
3. Select rising edge detection on the ETR pin by writing ETP=0 in the TIMx_SMCR register
4. Enable external clock mode 2 by writing ECE=1 in the TIMx_SMCR register.
5. Enable the counter by writing CEN=1 in the TIMx_CR1 register.

The counter counts once each 2 ETR rising edges.

The delay between the rising edge on ETR and the actual clock of the counter is due to the resynchronization circuit on the ETRP signal.

Figure 111. Control circuit in external clock mode 2

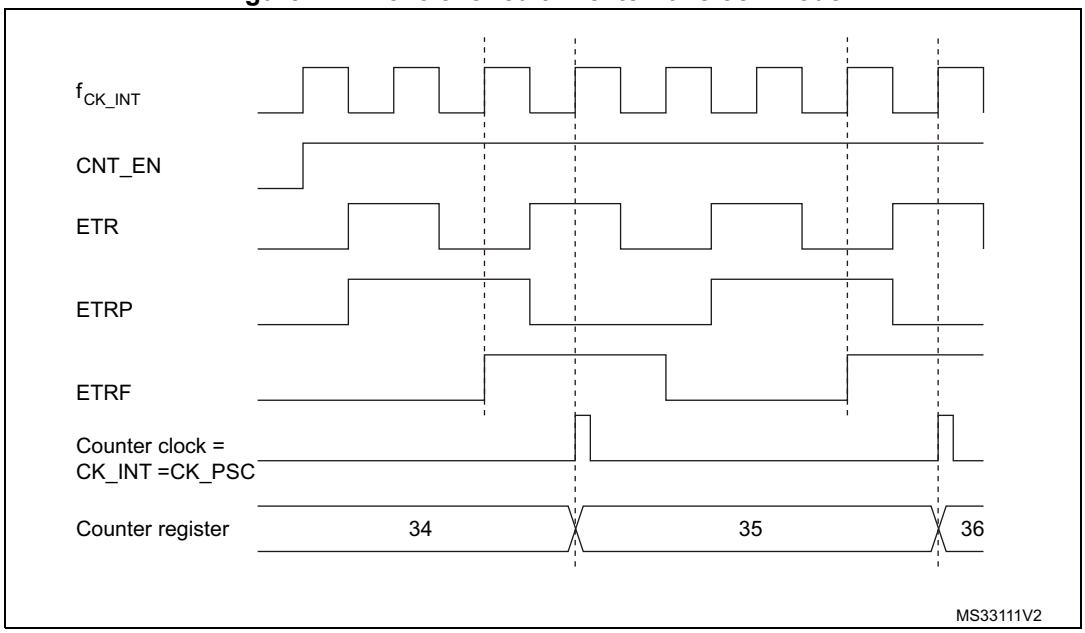

17.3.5 Capture/compare channels

Each Capture/Compare channel is built around a capture/compare register (including a shadow register), a input stage for capture (with digital filter, multiplexing and prescaler) and an output stage (with comparator and output control).

Figure 112 to *Figure 115* give an overview of one Capture/Compare channel.

The input stage samples the corresponding TIx input to generate a filtered signal TIxF. Then, an edge detector with polarity selection generates a signal (TIxFPx) which can be used as trigger input by the slave mode controller or as the capture command. It is prescaled before the capture register (ICxPS).

Figure 112. Capture/compare channel (example: channel 1 input stage)

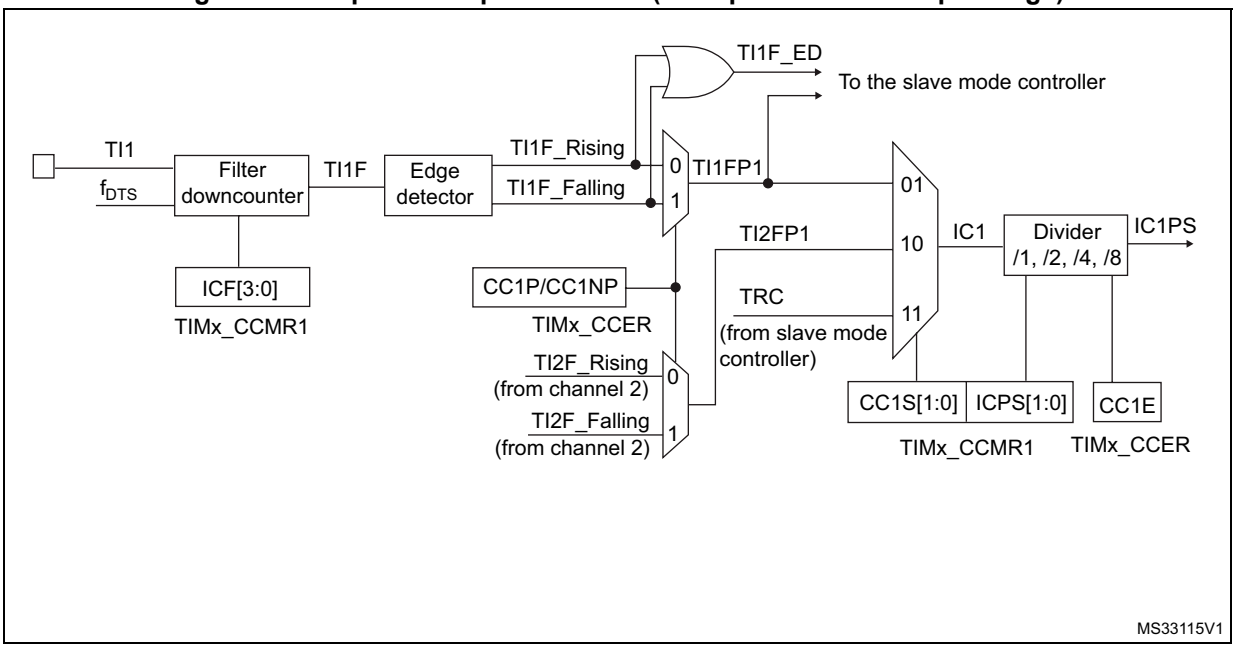

The output stage generates an intermediate waveform that is then used for reference: OCxRef (active high). The polarity acts at the end of the chain.

Figure 113. Capture/compare channel 1 main circuit

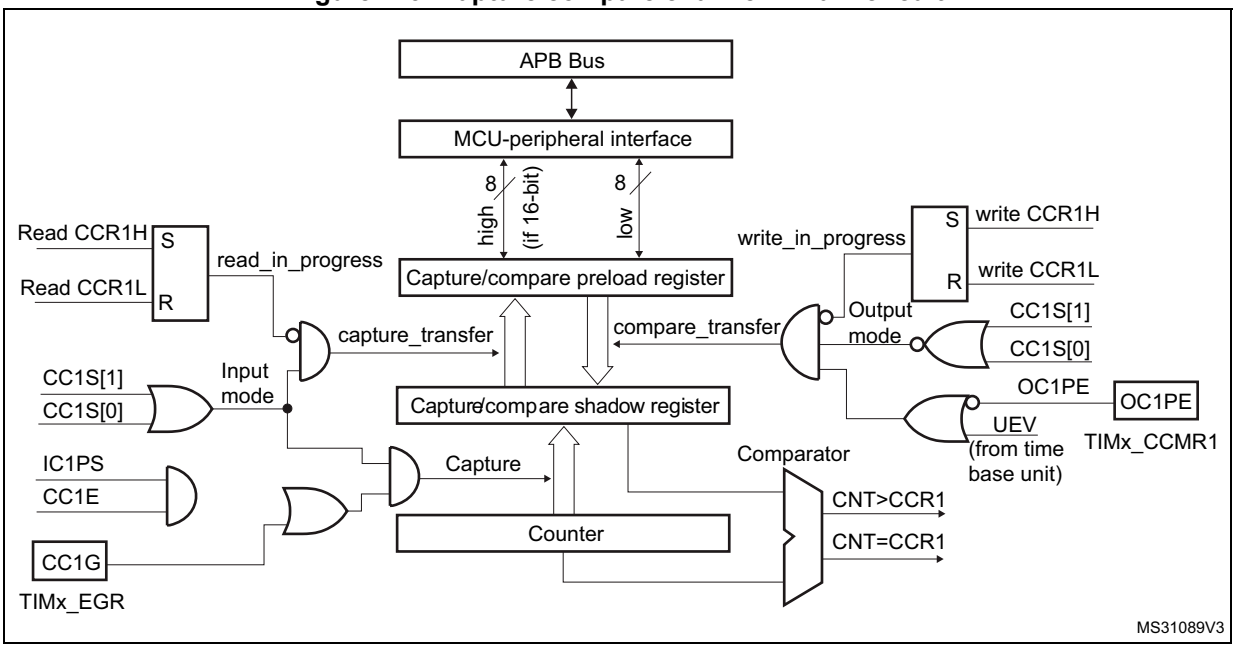

Figure 114. Output stage of capture/compare channel (channel 1 to 3)

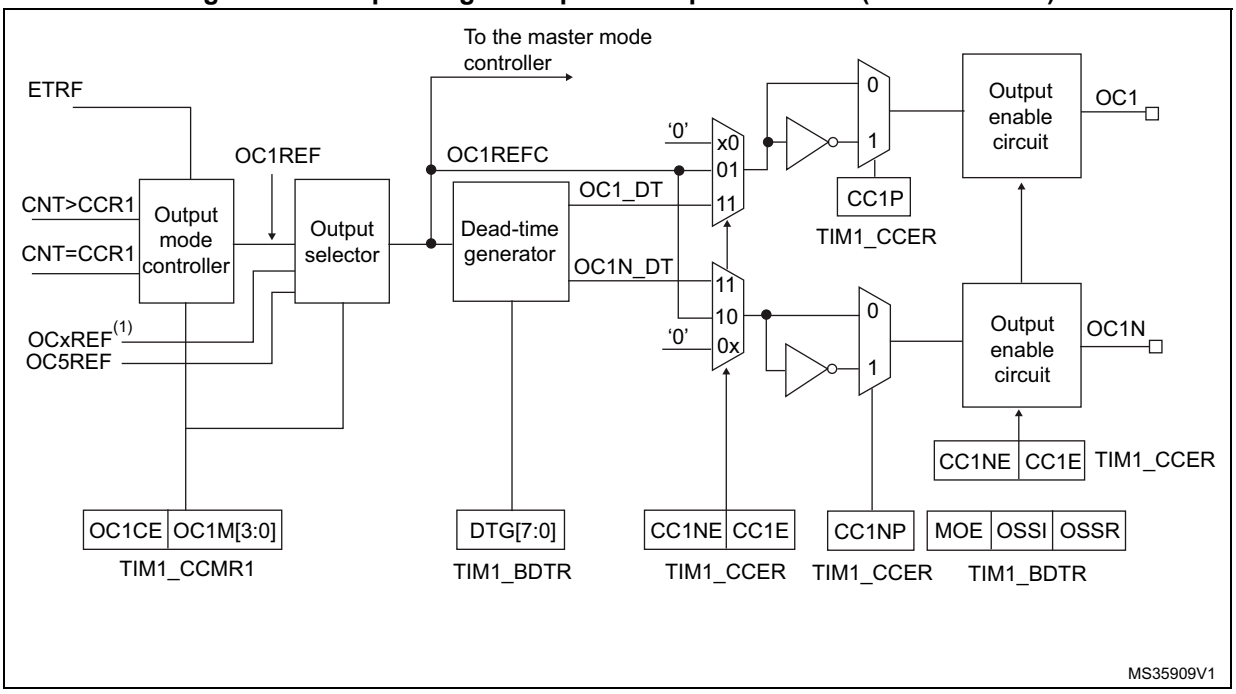

Figure 115. Output stage of capture/compare channel (channel 4)

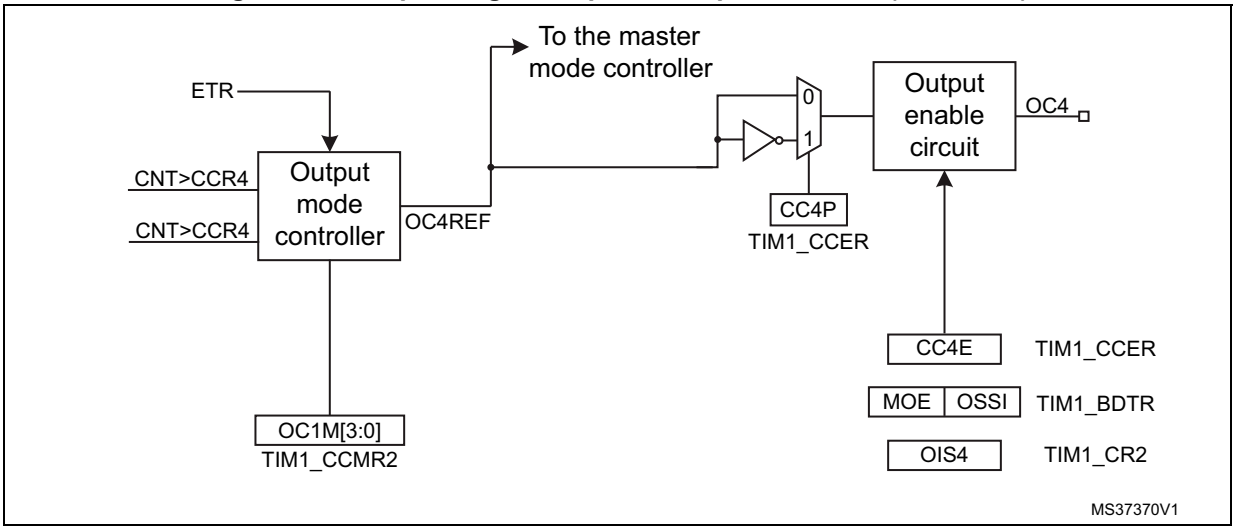

The capture/compare block is made of one preload register and one shadow register. Write and read always access the preload register.

In capture mode, captures are actually done in the shadow register, which is copied into the preload register.

In compare mode, the content of the preload register is copied into the shadow register which is compared to the counter.

17.3.6 Input capture mode

In Input capture mode, the Capture/Compare Registers (TIMx_CCRx) are used to latch the value of the counter after a transition detected by the corresponding ICx signal. When a capture occurs, the corresponding CCXIF flag (TIMx_SR register) is set and an interrupt or a DMA request can be sent if they are enabled. If a capture occurs while the CCxIF flag was already high, then the over-capture flag CCxOF (TIMx_SR register) is set. CCxIF can be cleared by software by writing it to ‘0’ or by reading the captured data stored in the TIMx_CCRx register. CCxOF is cleared when written to ‘0’.

The following example shows how to capture the counter value in TIMx_CCR1 when TI1 input rises. To do this, use the following procedure:

- Select the active input: TIMx_CCR1 must be linked to the TI1 input, so write the CC1S bits to 01 in the TIMx_CCMR1 register. As soon as CC1S becomes different from 00, the channel is configured in input and the TIMx_CCR1 register becomes read-only.
- Program the needed input filter duration with respect to the signal connected to the timer (by programming ICxF bits in the TIMx_CCMRx register if the input is a TIx input). Let’s imagine that, when toggling, the input signal is not stable during at must five internal clock cycles. We must program a filter duration longer than these five clock cycles. We can validate a transition on TI1 when 8 consecutive samples with the new level have been detected (sampled at f_{DTS} frequency). Then write IC1F bits to 0011 in the TIMx_CCMR1 register.
- Select the edge of the active transition on the TI1 channel by writing CC1P and CC1NP bits to 0 in the TIMx_CCER register (rising edge in this case).
- Program the input prescaler. In our example, we wish the capture to be performed at each valid transition, so the prescaler is disabled (write IC1PS bits to ‘00’ in the TIMx_CCMR1 register).
- Enable capture from the counter into the capture register by setting the CC1E bit in the TIMx_CCER register.
- If needed, enable the related interrupt request by setting the CC1IE bit in the TIMx_DIER register, and/or the DMA request by setting the CC1DE bit in the TIMx_DIER register.

When an input capture occurs:

- The TIMx_CCR1 register gets the value of the counter on the active transition.
- CC1IF flag is set (interrupt flag). CC1OF is also set if at least two consecutive captures occurred whereas the flag was not cleared.
- An interrupt is generated depending on the CC1IE bit.
- A DMA request is generated depending on the CC1DE bit.

In order to handle the overcapture, it is recommended to read the data before the overcapture flag. This is to avoid missing an overcapture which could happen after reading the flag and before reading the data.

Note: IC interrupt and/or DMA requests can be generated by software by setting the corresponding CCxG bit in the TIMx_EGR register.

17.3.7 PWM input mode

This mode is a particular case of input capture mode. The procedure is the same except:

- Two ICx signals are mapped on the same TIx input.
- These 2 ICx signals are active on edges with opposite polarity.
- One of the two TIxFP signals is selected as trigger input and the slave mode controller is configured in reset mode.

For example, user can measure the period (in TIMx_CCR1 register) and the duty cycle (in TIMx_CCR2 register) of the PWM applied on TI1 using the following procedure (depending on CK_INT frequency and prescaler value):

- Select the active input for TIMx_CCR1: write the CC1S bits to 01 in the TIMx_CCMR1 register (TI1 selected).
- Select the active polarity for TI1FP1 (used both for capture in TIMx_CCR1 and counter clear): write the CC1P and CC1NP bits to '0' (active on rising edge).
- Select the active input for TIMx_CCR2: write the CC2S bits to 10 in the TIMx_CCMR1 register (TI1 selected).
- Select the active polarity for TI1FP2 (used for capture in TIMx_CCR2): write the CC2P and CC2NP bits to '1' (active on falling edge).
- Select the valid trigger input: write the TS bits to 101 in the TIMx_SMCR register (TI1FP1 selected).
- Configure the slave mode controller in reset mode: write the SMS bits to 100 in the TIMx_SMCR register.
- Enable the captures: write the CC1E and CC2E bits to '1' in the TIMx_CCER register.

Figure 116. PWM input mode timing

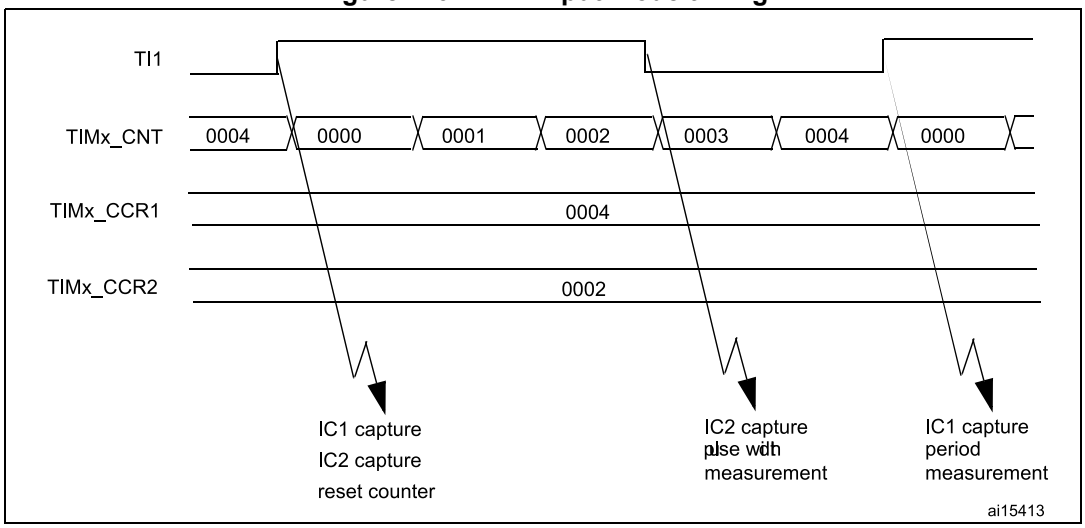

17.3.8 Forced output mode

In output mode (CCxS bits = 00 in the TIMx_CCMRx register), each output compare signal (OCxREF and then OCx/OCxN) can be forced to active or inactive level directly by software, independently of any comparison between the output compare register and the counter.

To force an output compare signal (OCXREF/OCx) to its active level, the user just needs to write 101 in the OCxM bits in the corresponding TIMx_CCMRx register. Thus OCXREF is

forced high (OCxREF is always active high) and OCx get opposite value to CCxP polarity bit.

For example: CCxP=0 (OCx active high) => OCx is forced to high level.

The OCxREF signal can be forced low by writing the OCxM bits to 100 in the TIMx_CCMRx register.

Anyway, the comparison between the TIMx_CCRx shadow register and the counter is still performed and allows the flag to be set. Interrupt and DMA requests can be sent accordingly. This is described in the output compare mode section below.

17.3.9 Output compare mode

This function is used to control an output waveform or indicating when a period of time has elapsed.

When a match is found between the capture/compare register and the counter, the output compare function:

- Assigns the corresponding output pin to a programmable value defined by the output compare mode (OCxM bits in the TIMx_CCMRx register) and the output polarity (CCxP bit in the TIMx_CCER register). The output pin can keep its level (OCXM=000), be set active (OCxM=001), be set inactive (OCxM=010) or can toggle (OCxM=011) on match.
- Sets a flag in the interrupt status register (CCxIF bit in the TIMx_SR register).
- Generates an interrupt if the corresponding interrupt mask is set (CCXIE bit in the TIMx_DIER register).
- Sends a DMA request if the corresponding enable bit is set (CCxDE bit in the TIMx_DIER register, CCDS bit in the TIMx_CR2 register for the DMA request selection).

The TIMx_CCRx registers can be programmed with or without preload registers using the OCxPE bit in the TIMx_CCMRx register.

In output compare mode, the update event UEV has no effect on OCxREF and OCx output. The timing resolution is one count of the counter. Output compare mode can also be used to output a single pulse (in One Pulse mode).

Procedure:

1. Select the counter clock (internal, external, prescaler).
2. Write the desired data in the TIMx_ARR and TIMx_CCRx registers.
3. Set the CCxIE bit if an interrupt request is to be generated.
4. Select the output mode. For example:
   - Write OCxM = 011 to toggle OCx output pin when CNT matches CCRx
   - Write OCxPE = 0 to disable preload register
   - Write CCxP = 0 to select active high polarity
   - Write CCxE = 1 to enable the output
5. Enable the counter by setting the CEN bit in the TIMx_CR1 register.

The TIMx_CCRx register can be updated at any time by software to control the output waveform, provided that the preload register is not enabled (OCxPE='0', else TIMx_CCRx shadow register is updated only at the next update event UEV). An example is given in *Figure 117*.

Figure 117. Output compare mode, toggle on OC1.

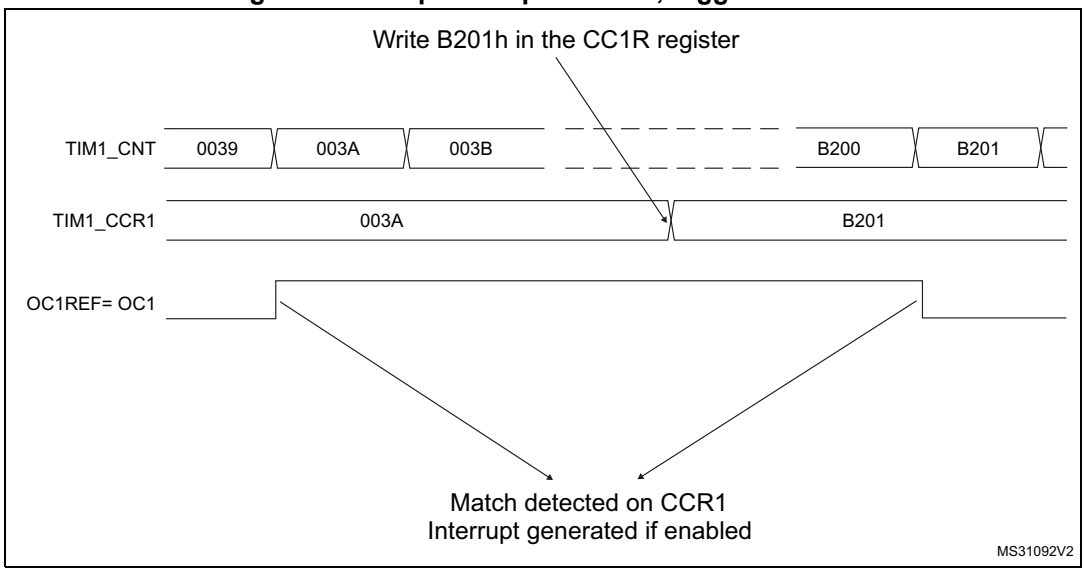

17.3.10 PWM mode

Pulse Width Modulation mode allows generating a signal with a frequency determined by the value of the TIMx_ARR register and a duty cycle determined by the value of the TIMx_CCRx register.

The PWM mode can be selected independently on each channel (one PWM per OCx output) by writing ‘110’ (PWM mode 1) or ‘111’ (PWM mode 2) in the OCxM bits in the TIMx_CCMRx register. The corresponding preload register must be enabled by setting the OCxPE bit in the TIMx_CCMRx register, and eventually the auto-reload preload register (in upcounting or center-aligned modes) by setting the ARPE bit in the TIMx_CR1 register.

As the preload registers are transferred to the shadow registers only when an update event occurs, before starting the counter, the user must initialize all the registers by setting the UG bit in the TIMx_EGR register.

OCx polarity is software programmable using the CCxP bit in the TIMx_CCER register. It can be programmed as active high or active low. OCx output is enabled by a combination of the CCxE, CCxNE, MOE, OSSI and OSSR bits (TIMx_CCER and TIMx_BDTR registers). Refer to the TIMx_CCER register description for more details.

In PWM mode (1 or 2), TIMx_CNT and TIMx_CCRx are always compared to determine whether TIMx_CCRx ≤TIMx_CNT or TIMx_CNT ≤TIMx_CCRx (depending on the direction of the counter).

The timer is able to generate PWM in edge-aligned mode or center-aligned mode depending on the CMS bits in the TIMx_CR1 register.

PWM edge-aligned mode

- Upcounting configuration

  Upcounting is active when the DIR bit in the TIMx_CR1 register is low. Refer to *Upcounting mode*.

  In the following example, we consider PWM mode 1. The reference PWM signal OCxREF is high as long as TIMx_CNT < TIMx_CCRx else it becomes low. If the

compare value in TIMx_CCRx is greater than the auto-reload value (in TIMx_ARR) then OCxREF is held at ‘1’. If the compare value is 0 then OCxRef is held at ‘0’. *Figure 118* shows some edge-aligned PWM waveforms in an example where TIMx_ARR=8.

Figure 118. Edge-aligned PWM waveforms (ARR=8)

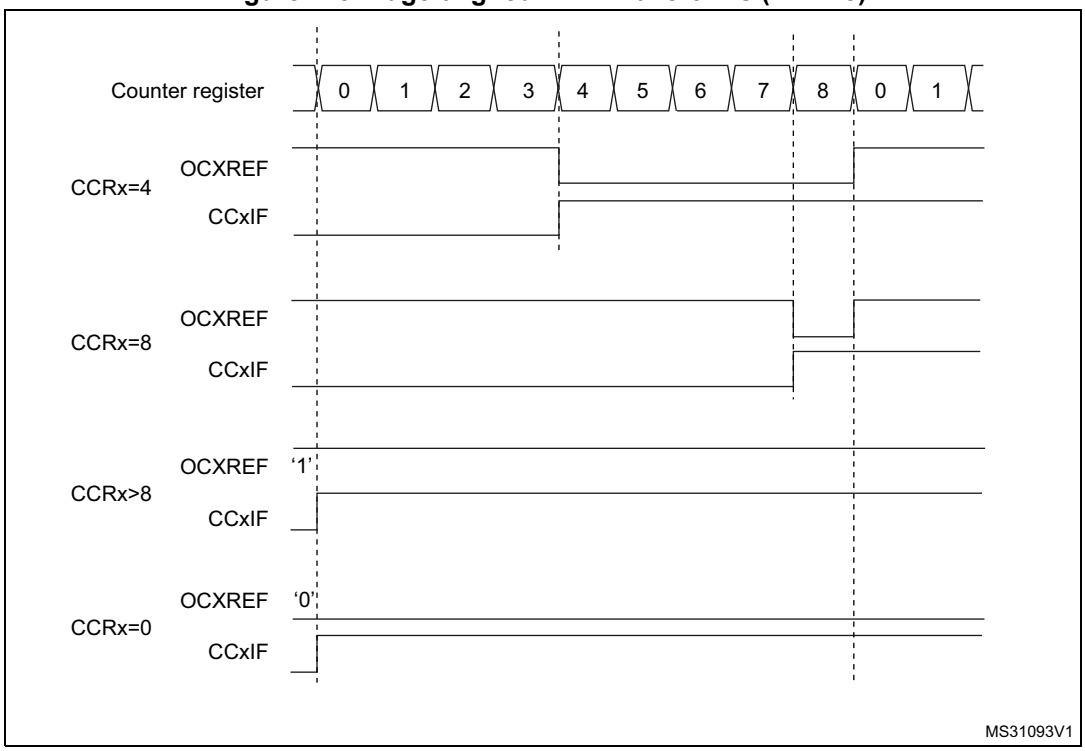

- Downcounting configuration

  Downcounting is active when DIR bit in TIMx_CR1 register is high. Refer to *Downcounting mode*

  In PWM mode 1, the reference signal OCxRef is low as long as TIMx_CNT > TIMx_CCRx else it becomes high. If the compare value in TIMx_CCRx is greater than the auto-reload value in TIMx_ARR, then OCxREF is held at ‘1’. 0% PWM is not possible in this mode.

PWM center-aligned mode

Center-aligned mode is active when the CMS bits in TIMx_CR1 register are different from ‘00’ (all the remaining configurations having the same effect on the OCxRef/OCx signals). The compare flag is set when the counter counts up, when it counts down or both when it counts up and down depending on the CMS bits configuration. The direction bit (DIR) in the

TIMx_CR1 register is updated by hardware and must not be changed by software. Refer to *Center-aligned mode (up/down counting)*.

Figure 119 shows some center-aligned PWM waveforms in an example where:

- TIMx_ARR=8,
- PWM mode is the PWM mode 1,
- The flag is set when the counter counts down corresponding to the center-aligned mode 1 selected for CMS=01 in TIMx_CR1 register.

Figure 119. Center-aligned PWM waveforms (ARR=8)

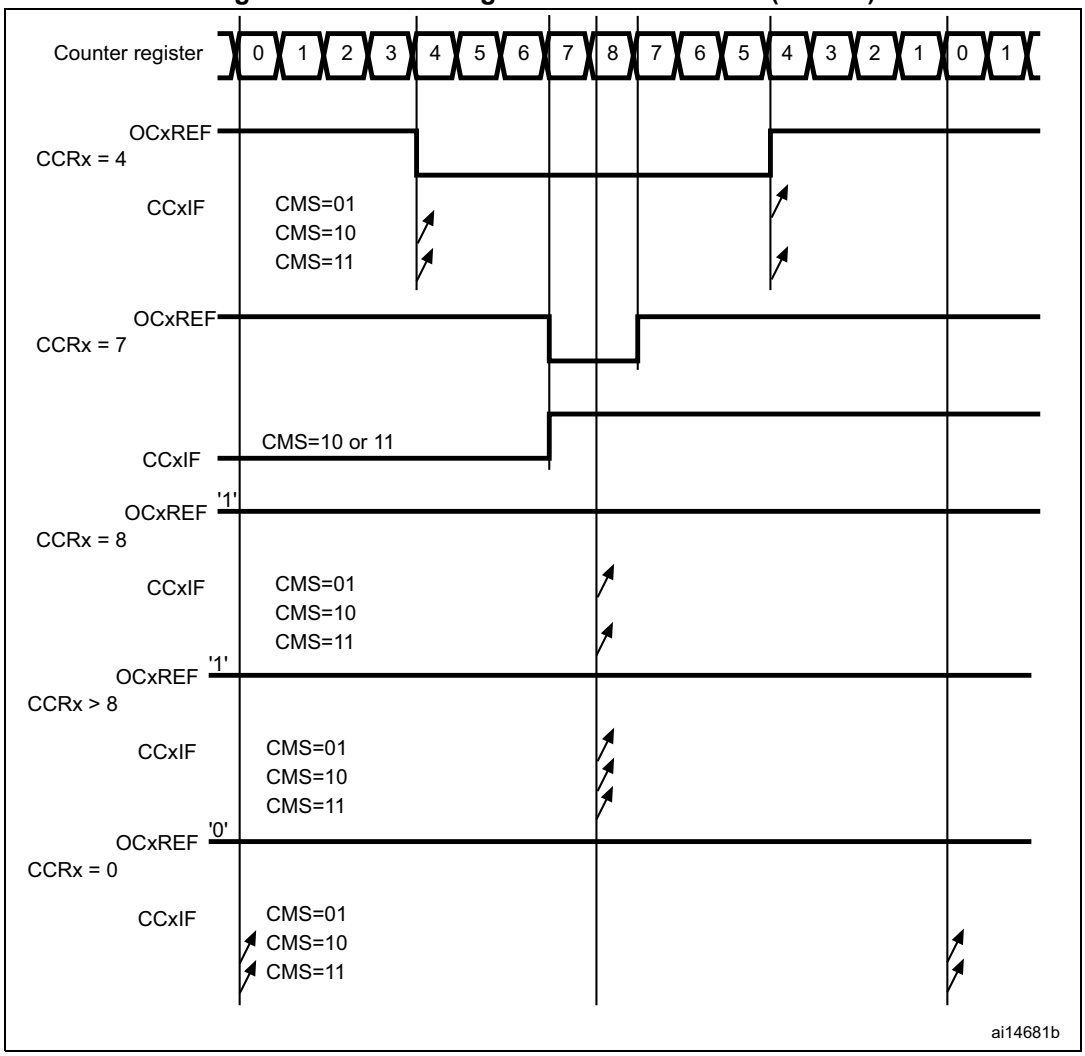

Hints on using center-aligned mode:

- When starting in center-aligned mode, the current up-down configuration is used. It means that the counter counts up or down depending on the value written in the DIR bit

in the TIMx_CR1 register. Moreover, the DIR and CMS bits must not be changed at the same time by the software.

- Writing to the counter while running in center-aligned mode is not recommended as it can lead to unexpected results. In particular:
  - The direction is not updated if the user writes a value in the counter greater than the auto-reload value (TIMx_CNT>TIMx_ARR). For example, if the counter was counting up, it will continue to count up.
  - The direction is updated if the user writes 0 or write the TIMx_ARR value in the counter but no Update Event UEV is generated.
- The safest way to use center-aligned mode is to generate an update by software (setting the UG bit in the TIMx_EGR register) just before starting the counter and not to write the counter while it is running.

17.3.11 Complementary outputs and dead-time insertion

The advanced-control timers (TIM1 and TIM8) can output two complementary signals and manage the switching-off and the switching-on instants of the outputs.

This time is generally known as dead-time and it has to be adjust it depending on the devices connected to the outputs and their characteristics (intrinsic delays of level-shifters, delays due to power switches...)

User can select the polarity of the outputs (main output OCx or complementary OCxN) independently for each output. This is done by writing to the CCxP and CCxNP bits in the TIMx_CCER register.

The complementary signals OCx and OCxN are activated by a combination of several control bits: the CCxE and CCxNE bits in the TIMx_CCER register and the MOE, OISx, OISxN, OSSI and OSSR bits in the TIMx_BDTR and TIMx_CR2 registers. Refer to *Table 95* for more details. In particular, the dead-time is activated when switching to the IDLE state (MOE falling down to 0).

Dead-time insertion is enabled by setting both CCxE and CCxNE bits, and the MOE bit if the break circuit is present. DTG[7:0] bits of the TIMx_BDTR register are used to control the dead-time generation for all channels. From a reference waveform OCxREF, it generates 2 outputs OCx and OCxN. If OCx and OCxN are active high:

- The OCx output signal is the same as the reference signal except for the rising edge, which is delayed relative to the reference rising edge.
- The OCxN output signal is the opposite of the reference signal except for the rising edge, which is delayed relative to the reference falling edge.

If the delay is greater than the width of the active output (OCx or OCxN) then the corresponding pulse is not generated.

The following figures show the relationships between the output signals of the dead-time generator and the reference signal OCxREF. (we suppose CCxP=0, CCxNP=0, MOE=1, CCxE=1 and CCxNE=1 in these examples)

Figure 120. Complementary output with dead-time insertion.

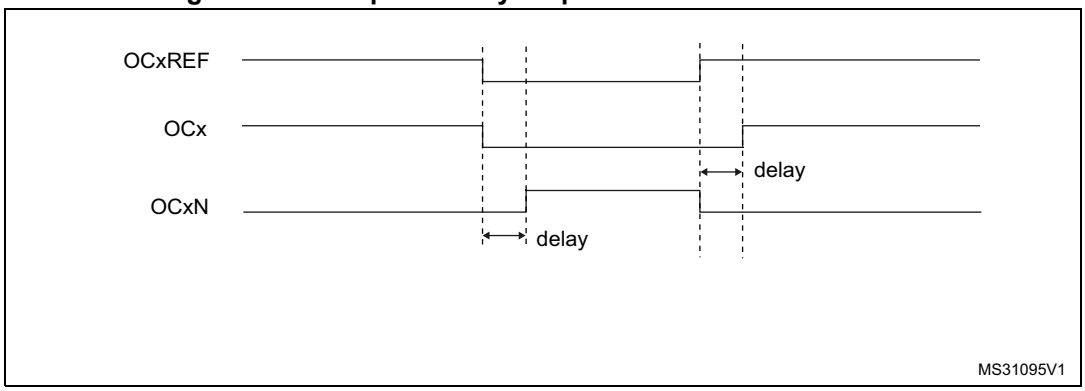

Figure 121. Dead-time waveforms with delay greater than the negative pulse.

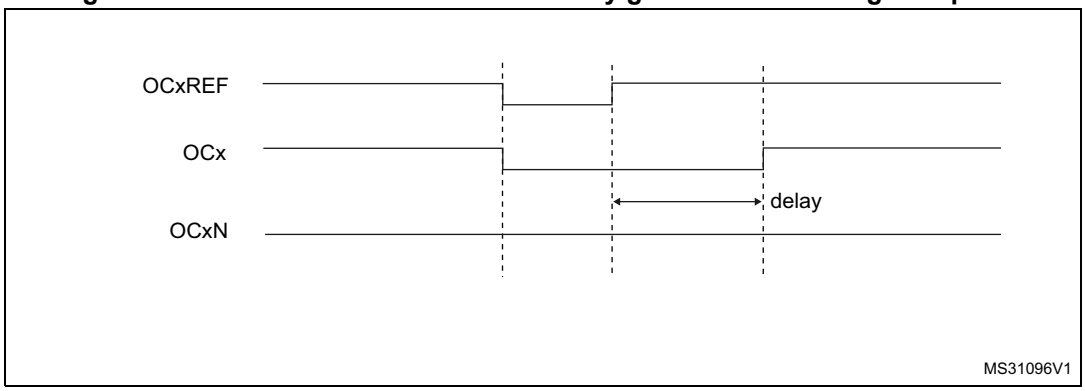

Figure 122. Dead-time waveforms with delay greater than the positive pulse.

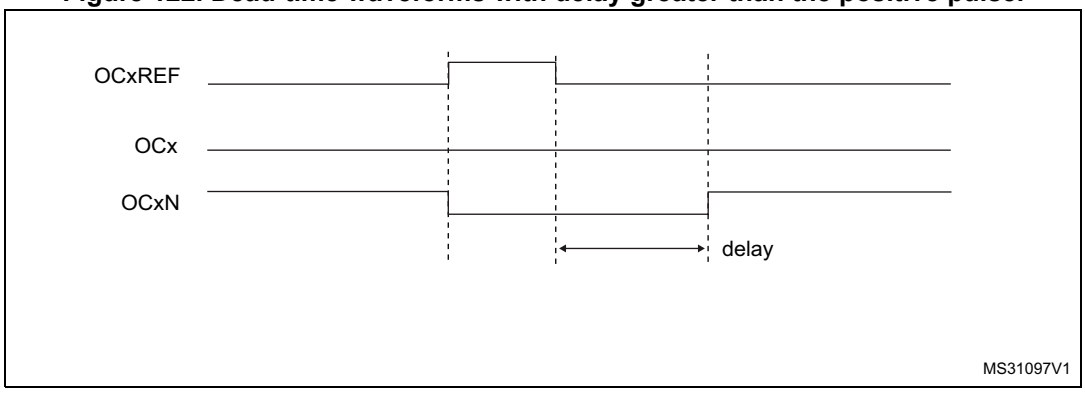

The dead-time delay is the same for each of the channels and is programmable with the DTG bits in the TIMx_BDTR register. Refer to *Section 17.4.18: TIM1 and TIM8 break and dead-time register (TIMx_BDTR)* for delay calculation.

Re-directing OCxREF to OCx or OCxN

In output mode (forced, output compare or PWM), OCxREF can be re-directed to the OCx output or to OCxN output by configuring the CCxE and CCxNE bits in the TIMx_CCER register.

This allows the user to send a specific waveform (such as PWM or static active level) on one output while the complementary remains at its inactive level. Other possibilities are to

have both outputs at inactive level or both outputs active and complementary with dead-time.

Note: When only OCxN is enabled (CCxE=0, CCxNE=1), it is not complemented and becomes active as soon as OCxREF is high. For example, if CCxNP=0 then OCxN=OCxRef. On the other hand, when both OCx and OCxN are enabled (CCxE=CCxNE=1) OCx becomes active when OCxREF is high whereas OCxN is complemented and becomes active when OCxREF is low.

17.3.12 Using the break function

When using the break function, the output enable signals and inactive levels are modified according to additional control bits (MOE, OSSI and OSSR bits in the TIMx_BDTR register, OISx and OISxN bits in the TIMx_CR2 register). In any case, the OCx and OCxN outputs cannot be set both to active level at a given time. Refer to *Table 95* for more details.

The break source can be either the break input pin or a clock failure event, generated by the Clock Security System (CSS), from the Reset Clock Controller. For further information on the Clock Security System, refer to *Section 7.2.7: Clock security system (CSS)*.

When exiting from reset, the break circuit is disabled and the MOE bit is low. User can enable the break function by setting the BKE bit in the TIMx_BDTR register. The break input polarity can be selected by configuring the BKP bit in the same register. BKE and BKP can be modified at the same time. When the BKE and BKP bits are written, a delay of 1 APB clock cycle is applied before the writing is effective. Consequently, it is necessary to wait 1 APB clock period to correctly read back the bit after the write operation.

Because MOE falling edge can be asynchronous, a resynchronization circuit has been inserted between the actual signal (acting on the outputs) and the synchronous control bit (accessed in the TIMx_BDTR register). It results in some delays between the asynchronous and the synchronous signals. In particular, if MOE is written to 1 whereas it was low, a delay (dummy instruction) must be inserted before reading it correctly. This is because the user writes an asynchronous signal, but reads a synchronous signal.

When a break occurs (selected level on the break input):

- The MOE bit is cleared asynchronously, putting the outputs in inactive state, idle state or in reset state (selected by the OSSI bit). This feature functions even if the MCU oscillator is off.
- Each output channel is driven with the level programmed in the OISx bit in the TIMx_CR2 register as soon as MOE=0. If OSSI=0 then the timer releases the enable output else the enable output remains high.
- When complementary outputs are used:
  - The outputs are first put in reset state inactive state (depending on the polarity). This is done asynchronously so that it works even if no clock is provided to the timer.
  - If the timer clock is still present, then the dead-time generator is reactivated in order to drive the outputs with the level programmed in the OISx and OISxN bits after a dead-time. Even in this case, OCx and OCxN cannot be driven to their

active level together. Note that because of the resynchronization on MOE, the dead-time duration is a bit longer than usual (around 2 ck_tim clock cycles).

  – If OSSI=0 then the timer releases the enable outputs else the enable outputs remain or become high as soon as one of the CCxE or CCxNE bits is high.

- The break status flag (BIF bit in the TIMx_SR register) is set. An interrupt can be generated if the BIE bit in the TIMx_DIER register is set. A DMA request can be sent if the BDE bit in the TIMx_DIER register is set.
- If the AOE bit in the TIMx_BDTR register is set, the MOE bit is automatically set again at the next update event UEV. This can be used to perform a regulation, for instance. Else, MOE remains low until it is written to '1' again. In this case, it can be used for security and the break input can be connected to an alarm from power drivers, thermal sensors or any security components.

Note: The break inputs is acting on level. Thus, the MOE cannot be set while the break input is active (neither automatically nor by software). In the meantime, the status flag BIF cannot be cleared.

The break can be generated by the BRK input which has a programmable polarity and an enable bit BKE in the TIMx_BDTR Register.

There are two solutions to generate a break:

- By using the BRK input which has a programmable polarity and an enable bit BKE in the TIMx_BDTR register
- By software through the BG bit of the TIMx_EGR register.

In addition to the break input and the output management, a write protection has been implemented inside the break circuit to safeguard the application. It allows freezing the configuration of several parameters (dead-time duration, OCx/OCxN polarities and state when disabled, OCxM configurations, break enable and polarity). The user can choose from three levels of protection selected by the LOCK bits in the TIMx_BDTR register. Refer to *Section 17.4.18: TIM1 and TIM8 break and dead-time register (TIMx_BDTR)*. The LOCK bits can be written only once after an MCU reset.

Figure 123 shows an example of behavior of the outputs in response to a break.

Figure 123. Output behavior in response to a break.

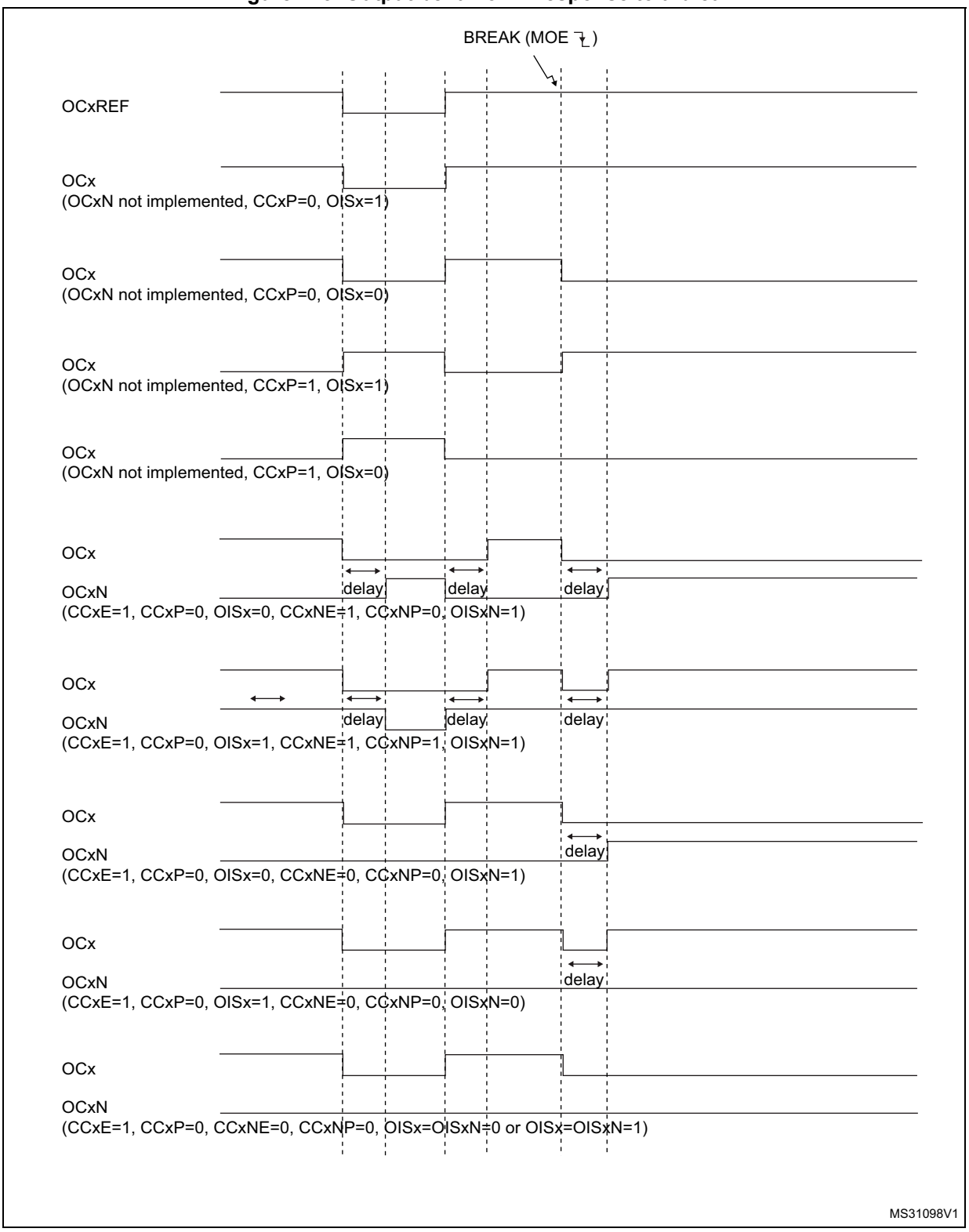

17.3.13 Clearing the OCxREF signal on an external event

The OCxREF signal for a given channel can be driven Low by applying a High level to the ETRF input (OCxCE enable bit of the corresponding TIMx_CCMRx register set to ‘1’). The OCxREF signal remains Low until the next update event, UEV, occurs.

This function can only be used in output compare and PWM modes, and does not work in forced mode.

For example, the ETR signal can be connected to the output of a comparator to be used for current handling. In this case, the ETR must be configured as follow:

1. The External Trigger Prescaler should be kept off: bits ETPS[1:0] of the TIMx_SMCR register set to ‘00’.
2. The external clock mode 2 must be disabled: bit ECE of the TIMx_SMCR register set to ‘0’.
3. The External Trigger Polarity (ETP) and the External Trigger Filter (ETF) can be configured according to the user needs.

Figure 124 shows the behavior of the OCxREF signal when the ETRF Input becomes High, for both values of the enable bit OCxCE. In this example, the timer TIMx is programmed in PWM mode.

Figure 124. Clearing TIMx OCxREF

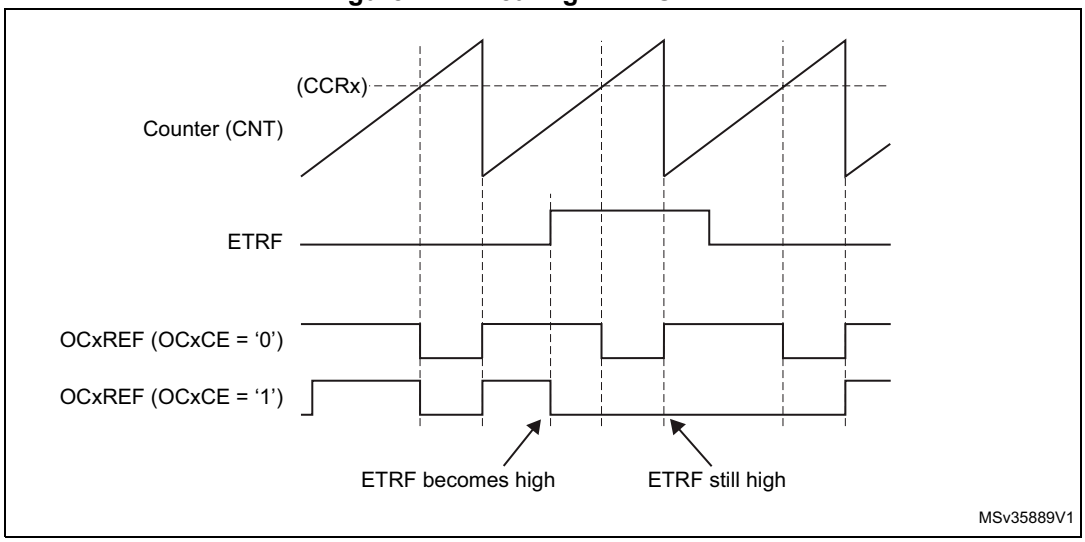

Note: In case of a PWM with a 100% duty cycle (if CCRx>ARR), then OCxREF is enabled again at the next counter overflow.

17.3.14 6-step PWM generation

When complementary outputs are used on a channel, preload bits are available on the OCxM, CCxE and CCxNE bits. The preload bits are transferred to the shadow bits at the COM commutation event. The user can thus program in advance the configuration for the next step and change the configuration of all the channels at the same time. COM can be generated by software by setting the COM bit in the TIMx_EGR register or by hardware (on TRGI rising edge).

A flag is set when the COM event occurs (COMIF bit in the TIMx_SR register), which can generate an interrupt (if the COMIE bit is set in the TIMx_DIER register) or a DMA request (if the COMDE bit is set in the TIMx_DIER register).

Figure 125 describes the behavior of the OCx and OCxN outputs when a COM event occurs, in 3 different examples of programmed configurations.

Figure 125. 6-step generation, COM example (OSSR=1)

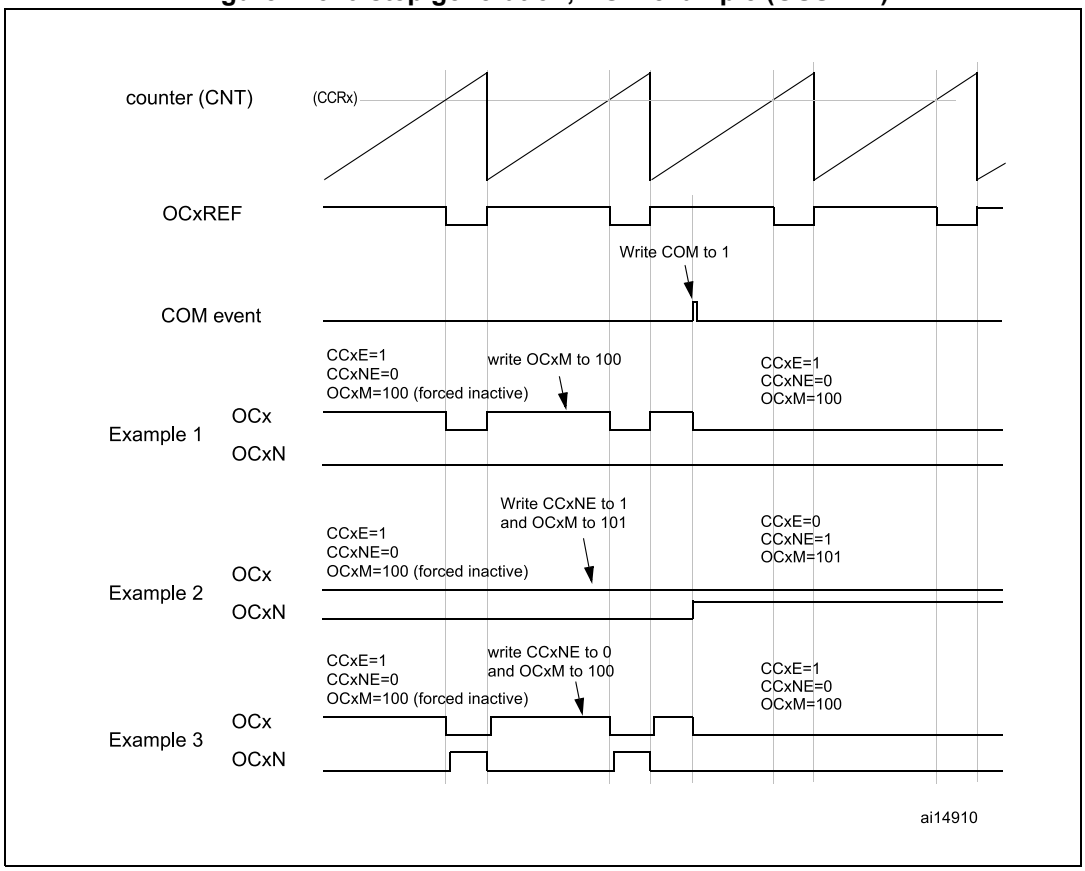

17.3.15 One-pulse mode

One-pulse mode (OPM) is a particular case of the previous modes. It allows the counter to be started in response to a stimulus and to generate a pulse with a programmable length after a programmable delay.

Starting the counter can be controlled through the slave mode controller. Generating the waveform can be done in output compare mode or PWM mode. Select One-pulse mode by setting the OPM bit in the TIMx_CR1 register. This makes the counter stop automatically at the next update event UEV.

A pulse can be correctly generated only if the compare value is different from the counter initial value. Before starting (when the timer is waiting for the trigger), the configuration must be:

- In upcounting: CNT < CCRx ≤ ARR (in particular, 0 < CCRx)
- In downcounting: CNT > CCRx

Figure 126. Example of one pulse mode.

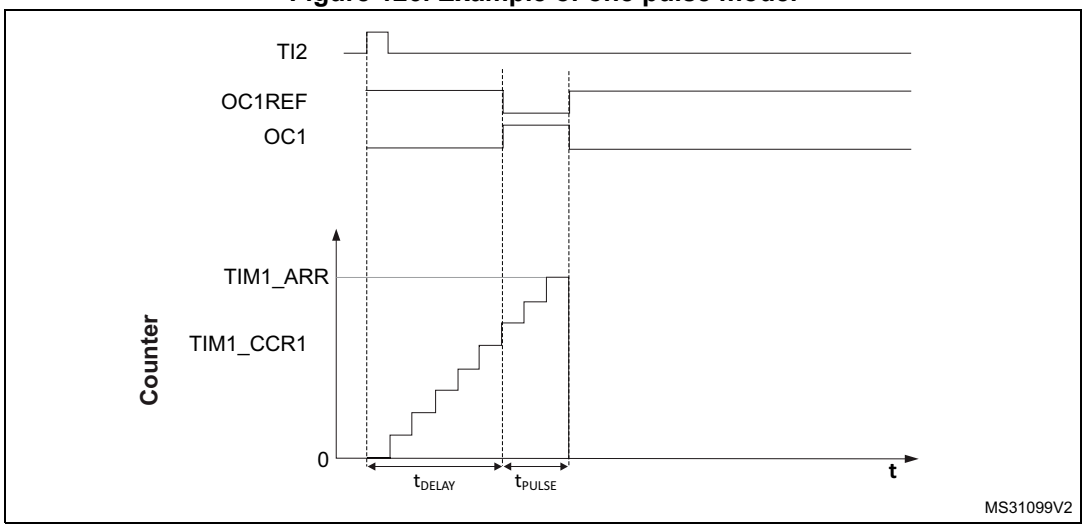

For example the user may want to generate a positive pulse on OC1 with a length of t_{PULSE} and after a delay of t_{DELAY} as soon as a positive edge is detected on the TI2 input pin.

Let's use TI2FP2 as trigger 1:

- Map TI2FP2 to TI2 by writing CC2S='01' in the TIMx_CCMR1 register.
- TI2FP2 must detect a rising edge, write CC2P='0' and CC2NP='0' in the TIMx_CCER register.
- Configure TI2FP2 as trigger for the slave mode controller (TRGI) by writing TS='110' in the TIMx_SMCR register.
- TI2FP2 is used to start the counter by writing SMS to '110' in the TIMx_SMCR register (trigger mode).

The OPM waveform is defined by writing the compare registers (taking into account the clock frequency and the counter prescaler).

- The t_{DELAY} is defined by the value written in the TIMx_CCR1 register.
- The t_{PULSE} is defined by the difference between the auto-reload value and the compare value (TIMx_ARR - TIMx_CCR1).
- Let us say the user wants to build a waveform with a transition from ‘0’ to ‘1’ when a compare match occurs and a transition from ‘1’ to ‘0’ when the counter reaches the auto-reload value. To do this, enable PWM mode 2 by writing OC1M=111 in the TIMx_CCMR1 register. The user can optionally enable the preload registers by writing OC1PE=’1’ in the TIMx_CCMR1 register and ARPE in the TIMx_CR1 register. In this case the compare value must be written in the TIMx_CCR1 register, the auto-reload value in the TIMx_ARR register, generate an update by setting the UG bit and wait for external trigger event on TI2. CC1P is written to ‘0’ in this example.

In our example, the DIR and CMS bits in the TIMx_CR1 register should be low.

The user only wants one pulse (Single mode), so '1’ must be written in the OPM bit in the TIMx_CR1 register to stop the counter at the next update event (when the counter rolls over from the auto-reload value back to 0). When OPM bit in the TIMx_CR1 register is set to '0', so the Repetitive Mode is selected.

Particular case: OCx fast enable:

In One-pulse mode, the edge detection on TIx input set the CEN bit which enables the counter. Then the comparison between the counter and the compare value makes the output toggle. But several clock cycles are needed for these operations and it limits the minimum delay t_{DELAY} min we can get.

If the user wants to output a waveform with the minimum delay, the OCxFE bit in the TIMx_CCMRx register must be set. Then OCxRef (and OCx) are forced in response to the stimulus, without taking in account the comparison. Its new level is the same as if a compare match had occurred. OCxFE acts only if the channel is configured in PWM1 or PWM2 mode.

17.3.16 Encoder interface mode

To select Encoder Interface mode write SMS=‘001’ in the TIMx_SMCR register if the counter is counting on TI2 edges only, SMS=’010’ if it is counting on TI1 edges only and SMS=’011’ if it is counting on both TI1 and TI2 edges.

Select the TI1 and TI2 polarity by programming the CC1P and CC2P bits in the TIMx_CCER register. When needed, the user can program the input filter as well. CC1NP and CC2NP must be kept low.

The two inputs TI1 and TI2 are used to interface to an incremental encoder. Refer to *Table 93*. The counter is clocked by each valid transition on TI1FP1 or TI2FP2 (TI1 and TI2 after input filter and polarity selection, TI1FP1=TI1 if not filtered and not inverted, TI2FP2=TI2 if not filtered and not inverted) assuming that it is enabled (CEN bit in TIMx_CR1 register written to ‘1’). The sequence of transitions of the two inputs is evaluated and generates count pulses as well as the direction signal. Depending on the sequence the counter counts up or down, the DIR bit in the TIMx_CR1 register is modified by hardware accordingly. The DIR bit is calculated at each transition on any input (TI1 or TI2), whatever the counter is counting on TI1 only, TI2 only or both TI1 and TI2.

Encoder interface mode acts simply as an external clock with direction selection. This means that the counter just counts continuously between 0 and the auto-reload value in the

TIMx_ARR register (0 to ARR or ARR down to 0 depending on the direction). So user must configure TIMx_ARR before starting. in the same way, the capture, compare, prescaler, repetition counter, trigger output features continue to work as normal. Encoder mode and External clock mode 2 are not compatible and must not be selected together.

In this mode, the counter is modified automatically following the speed and the direction of the incremental encoder and its content, therefore, always represents the encoder's position. The count direction correspond to the rotation direction of the connected sensor. *Table 93* summarizes the possible combinations, assuming TI1 and TI2 do not switch at the same time.

Table 93. Counting direction versus encoder signals

Active edge	Level on opposite signal (TI1FP1 for TI2, TI2FP2 for TI1)	TI1FP1 signal		TI2FP2 signal	
		Rising	Falling	Rising	Falling
Counting on TI1 only	High	Down	Up	No Count	No Count
	Low	Up	Down	No Count	No Count
Counting on TI2 only	High	No Count	No Count	Up	Down
	Low	No Count	No Count	Down	Up
Counting on TI1 and TI2	High	Down	Up	Up	Down
	Low	Up	Down	Down	Up

An external incremental encoder can be connected directly to the MCU without external interface logic. However, comparators are normally be used to convert the encoder's differential outputs to digital signals. This greatly increases noise immunity. The third encoder output which indicate the mechanical zero position, may be connected to an external interrupt input and trigger a counter reset.

Figure 127 gives an example of counter operation, showing count signal generation and direction control. It also shows how input jitter is compensated where both edges are selected. This might occur if the sensor is positioned near to one of the switching points. For this example we assume that the configuration is the following:

- CC1S='01' (TIMx_CCMR1 register, TI1FP1 mapped on TI1).
- CC2S='01' (TIMx_CCMR2 register, TI1FP2 mapped on TI2).
- CC1P='0', CC1NP='0', and IC1F = '0000' (TIMx_CCER register, TI1FP1 non-inverted, TI1FP1=TI1).
- CC2P='0', CC2NP='0', and IC2F = '0000' (TIMx_CCER register, TI1FP2 non-inverted, TI1FP2= TI2).
- SMS='011' (TIMx_SMCR register, both inputs are active on both rising and falling edges).
- CEN='1' (TIMx_CR1 register, Counter enabled).

Figure 127. Example of counter operation in encoder interface mode.

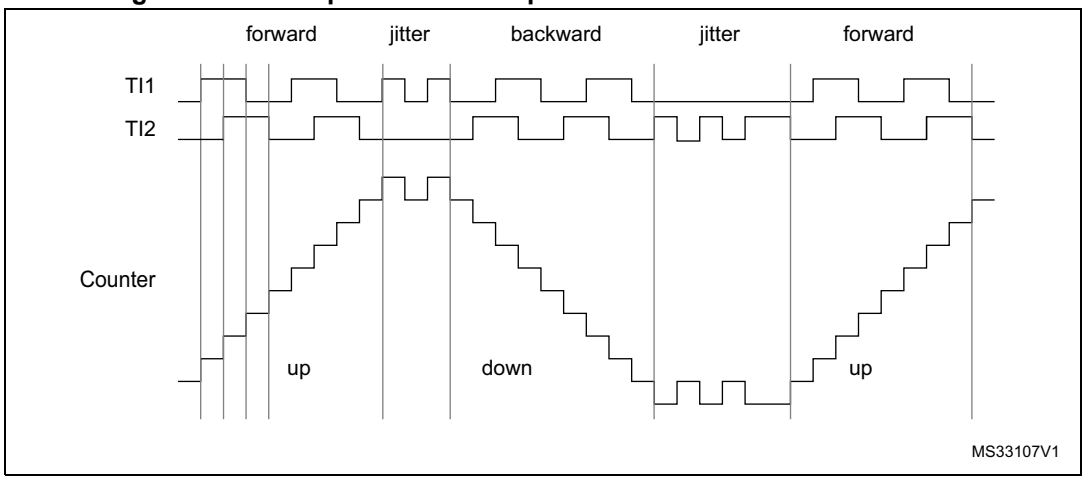

Figure 128 gives an example of counter behavior when TI1FP1 polarity is inverted (same configuration as above except CC1P='1').

Figure 128. Example of encoder interface mode with TI1FP1 polarity inverted.

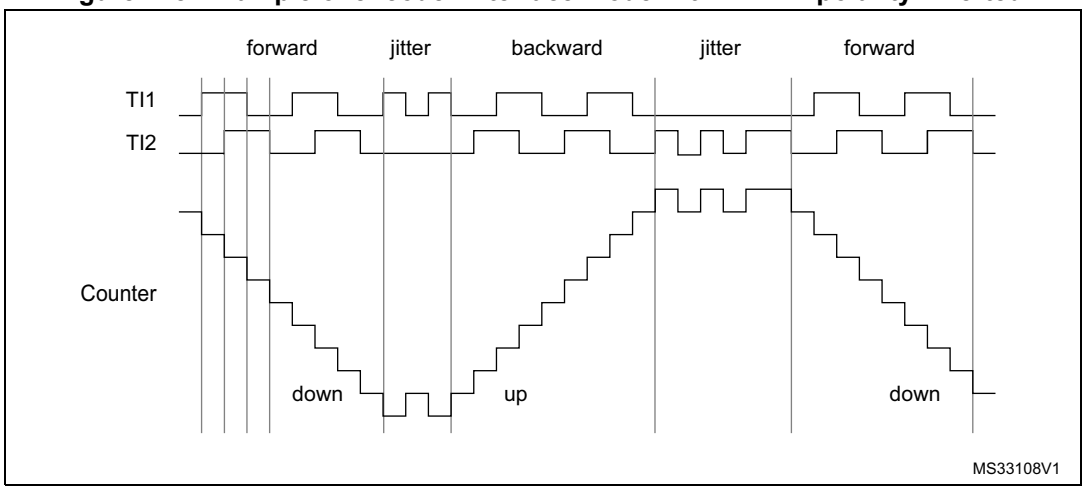

The timer, when configured in Encoder Interface mode provides information on the sensor's current position.The user can obtain dynamic information (speed, acceleration, deceleration) by measuring the period between two encoder events using a second timer configured in capture mode. The output of the encoder which indicates the mechanical zero can be used for this purpose. Depending on the time between two events, the counter can also be read at regular times. This can be done by latching the counter value into a third input capture register if available (then the capture signal must be periodic and can be generated by another timer). when available, it is also possible to read its value through a DMA request generated by a real-time clock.

17.3.17 Timer input XOR function

The TI1S bit in the TIMx_CR2 register, allows the input filter of channel 1 to be connected to the output of a XOR gate, combining the three input pins TIMx_CH1, TIMx_CH2 and TIMx_CH3.

The XOR output can be used with all the timer input functions such as trigger or input capture. An example of this feature used to interface Hall sensors is given in *Section 17.3.18*.

17.3.18 Interfacing with Hall sensors

This is done using the advanced-control timers (TIM1 or TIM8) to generate PWM signals to drive the motor and another timer TIMx (TIM2, TIM3, TIM4 or TIM5) referred to as "interfacing timer" in *Figure 129*. The "interfacing timer" captures the 3 timer input pins (TIMx_CH1, TIMx_CH2, and TIMx_CH3) connected through a XOR to the TI1 input channel (selected by setting the TI1S bit in the TIMx_CR2 register).

The slave mode controller is configured in reset mode; the slave input is TI1F_ED. Thus, each time one of the 3 inputs toggles, the counter restarts counting from 0. This creates a time base triggered by any change on the Hall inputs.

On the "interfacing timer", capture/compare channel 1 is configured in capture mode, capture signal is TRC (see *Figure 112*). The captured value, which corresponds to the time elapsed between 2 changes on the inputs, gives information about motor speed.

The "interfacing timer" can be used in output mode to generate a pulse which changes the configuration of the channels of the advanced-control timer (TIM1 or TIM8) (by triggering a COM event). The TIM1 timer is used to generate PWM signals to drive the motor. To do this, the interfacing timer channel must be programmed so that a positive pulse is generated after a programmed delay (in output compare or PWM mode). This pulse is sent to the advanced-control timer (TIM1 or TIM8) through the TRGO output.

Example: the user wants to change the PWM configuration of the advanced-control timer TIM1 after a programmed delay each time a change occurs on the Hall inputs connected to one of the TIMx timers.

- Configure 3 timer inputs ORed to the TI1 input channel by writing the TI1S bit in the TIMx_CR2 register to '1',
- Program the time base: write the TIMx_ARR to the max value (the counter must be cleared by the TI1 change. Set the prescaler to get a maximum counter period longer than the time between 2 changes on the sensors,
- Program channel 1 in capture mode (TRC selected): write the CC1S bits in the TIMx_CCMR1 register to '11'. The user can also program the digital filter if needed,
- Program channel 2 in PWM 2 mode with the desired delay: write the OC2M bits to '111' and the CC2S bits to '00' in the TIMx_CCMR1 register,
- Select OC2REF as trigger output on TRGO: write the MMS bits in the TIMx_CR2 register to '101',

In the advanced-control timer TIM1, the right ITR input must be selected as trigger input, the timer is programmed to generate PWM signals, the capture/compare control signals are preloaded (CCPC=1 in the TIMx_CR2 register) and the COM event is controlled by the trigger input (CCUS=1 in the TIMx_CR2 register). The PWM control bits (CCxE, OCxM) are written after a COM event for the next step (this can be done in an interrupt subroutine generated by the rising edge of OC2REF).

Figure 129 describes this example.

Figure 129. Example of Hall sensor interface

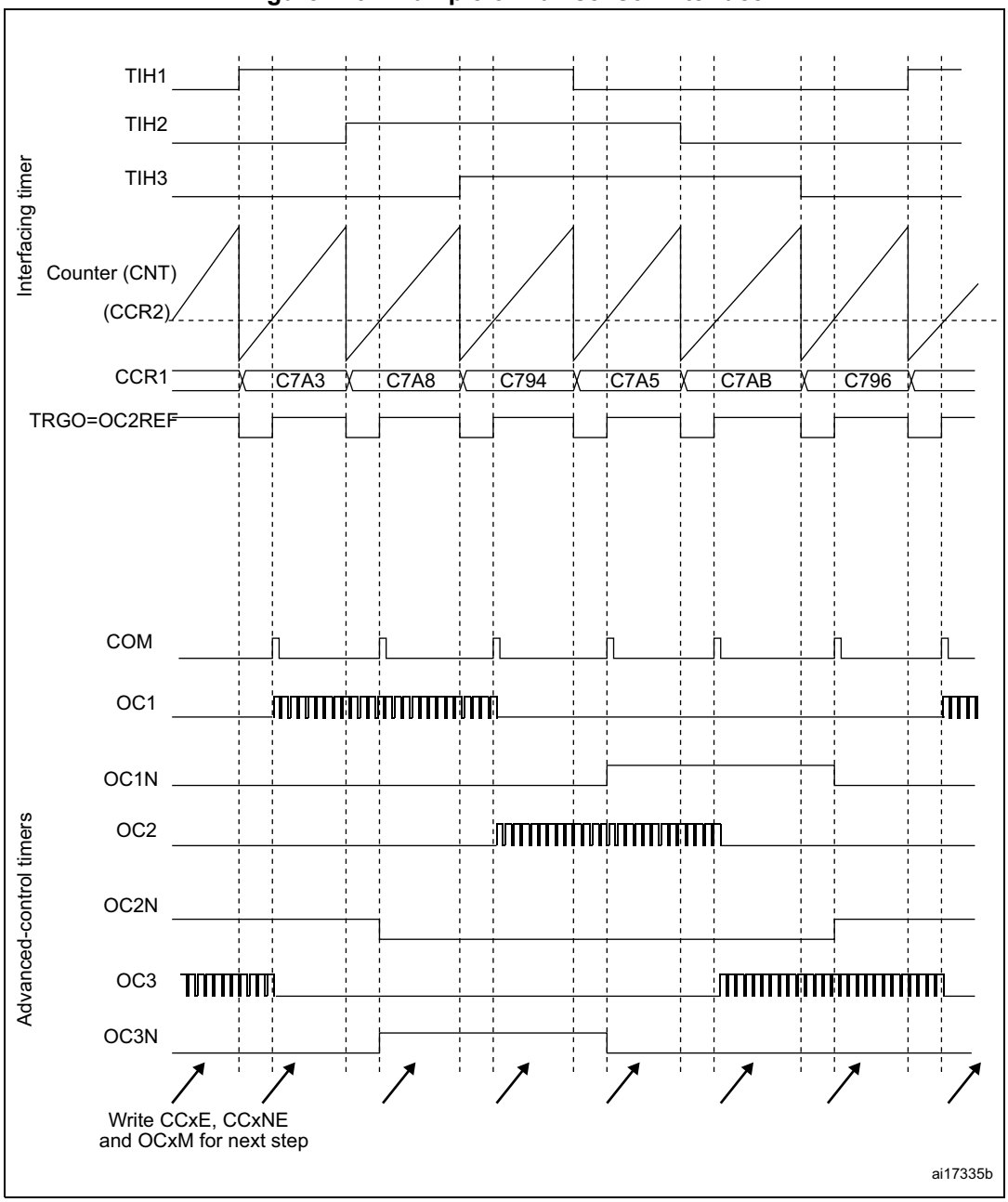

17.3.19 TIMx and external trigger synchronization

The TIMx timer can be synchronized with an external trigger in several modes: Reset mode, Gated mode and Trigger mode.

Slave mode: Reset mode

The counter and its prescaler can be reinitialized in response to an event on a trigger input. Moreover, if the URS bit from the TIMx_CR1 register is low, an update event UEV is generated. Then all the preloaded registers (TIMx_ARR, TIMx_CCRx) are updated.

In the following example, the upcounter is cleared in response to a rising edge on TI1 input:

- Configure the channel 1 to detect rising edges on TI1. Configure the input filter duration (in this example, we don't need any filter, so we keep IC1F=0000). The capture prescaler is not used for triggering, so there's no need to configure it. The CC1S bits select the input capture source only, CC1S = 01 in the TIMx_CCMR1 register. Write CC1P=0 and CC1NP='0' in TIMx_CCER register to validate the polarity (and detect rising edges only).
- Configure the timer in reset mode by writing SMS=100 in TIMx_SMCR register. Select TI1 as the input source by writing TS=101 in TIMx_SMCR register.
- Start the counter by writing CEN=1 in the TIMx_CR1 register.

The counter starts counting on the internal clock, then behaves normally until TI1 rising edge. When TI1 rises, the counter is cleared and restarts from 0. In the meantime, the trigger flag is set (TIF bit in the TIMx_SR register) and an interrupt request, or a DMA request can be sent if enabled (depending on the TIE and TDE bits in TIMx_DIER register).

The following figure shows this behavior when the auto-reload register TIMx_ARR=0x36. The delay between the rising edge on TI1 and the actual reset of the counter is due to the resynchronization circuit on TI1 input.

Figure 130. Control circuit in reset mode

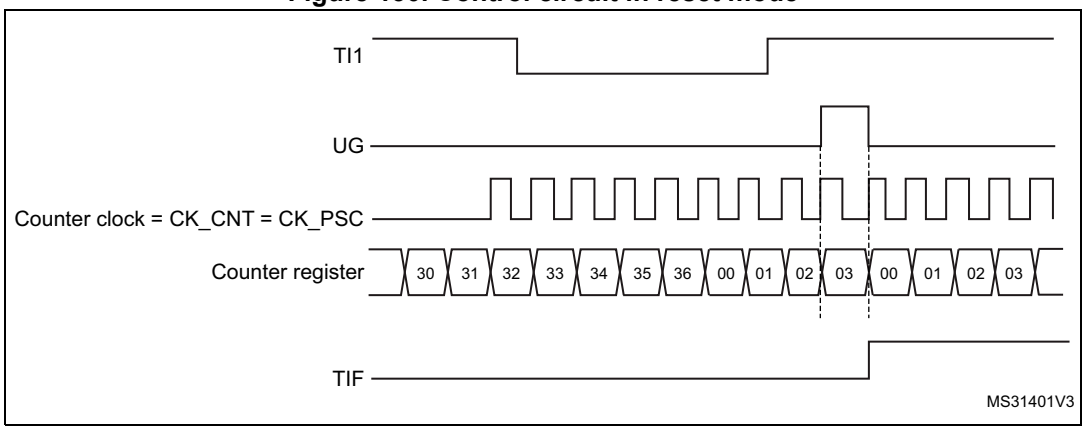

Slave mode: Gated mode

The counter can be enabled depending on the level of a selected input.

In the following example, the upcounter counts only when TI1 input is low:

- Configure the channel 1 to detect low levels on TI1. Configure the input filter duration (in this example, we don't need any filter, so we keep IC1F=0000). The capture prescaler is not used for triggering, so the user does not need to configure it. The CC1S bits select the input capture source only, CC1S=01 in TIMx_CCMR1 register. Write CC1P=1 and CC1NP='0' in TIMx_CCER register to validate the polarity (and detect low level only).
- Configure the timer in gated mode by writing SMS=101 in TIMx_SMCR register. Select TI1 as the input source by writing TS=101 in TIMx_SMCR register.
- Enable the counter by writing CEN=1 in the TIMx_CR1 register (in gated mode, the counter doesn't start if CEN=0, whatever is the trigger input level).

The counter starts counting on the internal clock as long as TI1 is low and stops as soon as TI1 becomes high. The TIF flag in the TIMx_SR register is set both when the counter starts or stops.

The delay between the rising edge on TI1 and the actual stop of the counter is due to the resynchronization circuit on TI1 input.

Figure 131. Control circuit in gated mode

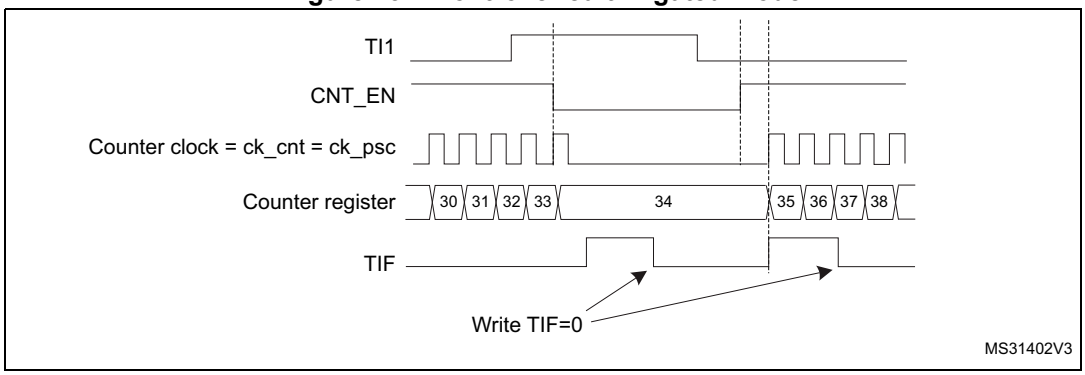

Slave mode: Trigger mode

The counter can start in response to an event on a selected input.

In the following example, the upcounter starts in response to a rising edge on TI2 input:

- Configure the channel 2 to detect rising edges on TI2. Configure the input filter duration (in this example, we don't need any filter, so we keep IC2F=0000). The capture prescaler is not used for triggering, so there's no need to configure it. The CC2S bits are configured to select the input capture source only, CC2S=01 in TIMx_CCMR1 register. Write CC2P=1 and CC2NP=0 in TIMx_CCER register to validate the polarity (and detect low level only).
- Configure the timer in trigger mode by writing SMS=110 in TIMx_SMCR register. Select TI2 as the input source by writing TS=110 in TIMx_SMCR register.

When a rising edge occurs on TI2, the counter starts counting on the internal clock and the TIF flag is set.

The delay between the rising edge on TI2 and the actual start of the counter is due to the resynchronization circuit on TI2 input.

Figure 132. Control circuit in trigger mode

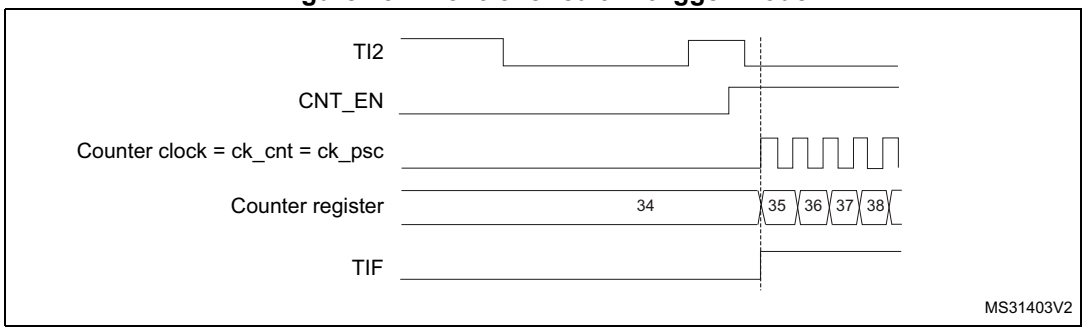

Slave mode: external clock mode 2 + trigger mode

The external clock mode 2 can be used in addition to another slave mode (except external clock mode 1 and encoder mode). In this case, the ETR signal is used as external clock input, and another input can be selected as trigger input (in reset mode, gated mode or trigger mode). It is recommended not to select ETR as TRGI through the TS bits of TIMx_SMCR register.

In the following example, the upcounter is incremented at each rising edge of the ETR signal as soon as a rising edge of TI1 occurs:

1. Configure the external trigger input circuit by programming the TIMx_SMCR register as follows:
   - ETF = 0000: no filter
   - ETPS = 00: prescaler disabled
   - ETP = 0: detection of rising edges on ETR and ECE=1 to enable the external clock mode 2.
2. Configure the channel 1 as follows, to detect rising edges on TI:
   - IC1F=0000: no filter.
   - The capture prescaler is not used for triggering and does not need to be configured.
   - CC1S=01 in TIMx_CCMR1 register to select only the input capture source

– CC1P=0 and CC1NP='0' in TIMx_CCER register to validate the polarity (and detect rising edge only).

3. Configure the timer in trigger mode by writing SMS=110 in TIMx_SMCR register. Select TI1 as the input source by writing TS=101 in TIMx_SMCR register.

A rising edge on TI1 enables the counter and sets the TIF flag. The counter then counts on ETR rising edges.

The delay between the rising edge of the ETR signal and the actual reset of the counter is due to the resynchronization circuit on ETRP input.

Figure 133. Control circuit in external clock mode 2 + trigger mode

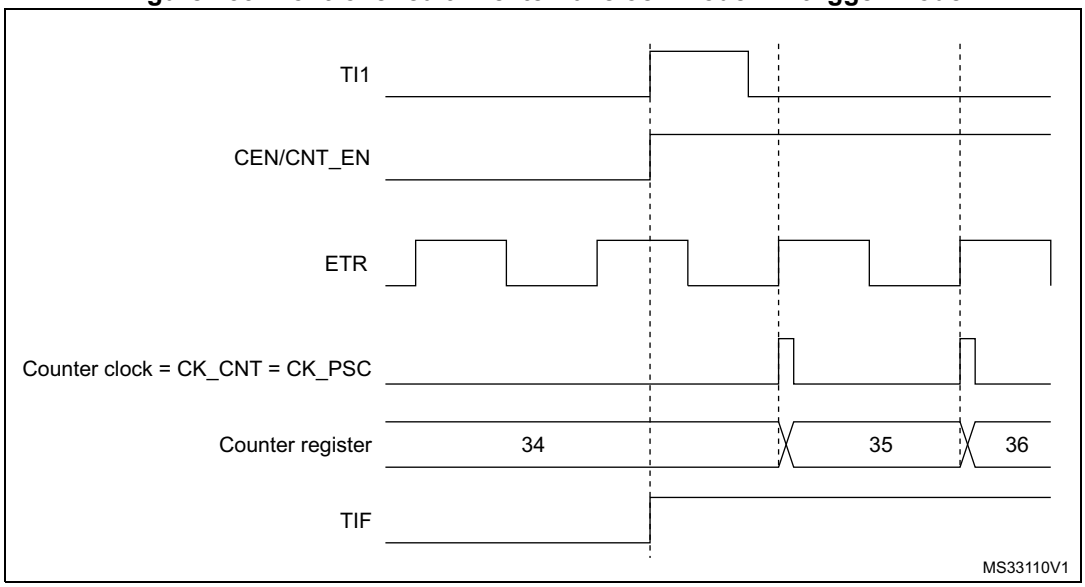

17.3.20 Timer synchronization

The TIM timers are linked together internally for timer synchronization or chaining. Refer to *Section 18.3.15: Timer synchronization* for details.

Note: The clock of the slave timer must be enabled prior to receive events from the master timer, and must not be changed on-the-fly while triggers are received from the master timer.

17.3.21 Debug mode

When the microcontroller enters debug mode (Cortex®-M4 with FPU core halted), the TIMx counter either continues to work normally or stops, depending on DBG_TIMx_STOP configuration bit in DBG module. For more details, refer to *Section 38.16.2: Debug support for timers, watchdog, bxCAN and I^2C*.

For safety purposes, when the counter is stopped (DBG_TIMx_STOP = 1 in DBGMCU_APBx_FZ register), the outputs are disabled (as if the MOE bit was reset). The outputs can either be forced to an inactive state (OSSI bit = 1), or have their control taken over by the GPIO controller (OSSI bit = 0) to force them to Hi-Z.

17.4 TIM1 and TIM8 registers

Refer to *Section 1.1* for a list of abbreviations used in register descriptions.

The peripheral registers must be written by half-words (16 bits) or words (32 bits). Read accesses can be done by bytes (8 bits), half-word (16 bits) or words (32 bits).

17.4.1 TIM1 and TIM8 control register 1 (TIMx_CR1)

Address offset: 0x00

Reset value: 0x0000

15	14	13	12	11	10	9	8	7	6	5	4	3	2	1	0
Reserved						CKD[1:0]		ARPE	CMS[1:0]		DIR	OPM	URS	UDIS	CEN
						rw	rw	rw	rw	rw	rw	rw	rw	rw	rw

Bits 15:10 Reserved, must be kept at reset value.

Bits 9:8 **CKD[1:0]**: Clock division

This bit-field indicates the division ratio between the timer clock (CK_INT) frequency and the dead-time and sampling clock (t_{DTS})used by the dead-time generators and the digital filters (ETR, TIx),

00: $t_{DTS}=t_{CK_INT}$
01: $t_{DTS}=2*t_{CK_INT}$
10: $t_{DTS}=4*t_{CK_INT}$
11: Reserved, do not program this value

Bit 7 **ARPE**: Auto-reload preload enable

0: TIMx_ARR register is not buffered
1: TIMx_ARR register is buffered

Bits 6:5 **CMS[1:0]**: Center-aligned mode selection

00: Edge-aligned mode. The counter counts up or down depending on the direction bit (DIR).
01: Center-aligned mode 1. The counter counts up and down alternatively. Output compare interrupt flags of channels configured in output (CCxS=00 in TIMx_CCMRx register) are set only when the counter is counting down.
10: Center-aligned mode 2. The counter counts up and down alternatively. Output compare interrupt flags of channels configured in output (CCxS=00 in TIMx_CCMRx register) are set only when the counter is counting up.
11: Center-aligned mode 3. The counter counts up and down alternatively. Output compare interrupt flags of channels configured in output (CCxS=00 in TIMx_CCMRx register) are set both when the counter is counting up or down.

Note: It is not allowed to switch from edge-aligned mode to center-aligned mode as long as the counter is enabled (CEN=1)

Bit 4 **DIR**: Direction

0: Counter used as upcounter
1: Counter used as downcounter

Note: This bit is read only when the timer is configured in Center-aligned mode or Encoder mode.

Bit 3 **OPM**: One pulse mode

0: Counter is not stopped at update event
1: Counter stops counting at the next update event (clearing the bit CEN)

Bit 2 **URS**: Update request source

This bit is set and cleared by software to select the UEV event sources.

0: Any of the following events generate an update interrupt or DMA request if enabled. These events can be:

- Counter overflow/underflow
- Setting the UG bit
- Update generation through the slave mode controller

1: Only counter overflow/underflow generates an update interrupt or DMA request if enabled.

Bit 1 **UDIS**: Update disable

This bit is set and cleared by software to enable/disable UEV event generation.

0: UEV enabled. The Update (UEV) event is generated by one of the following events:

- Counter overflow/underflow
- Setting the UG bit
- Update generation through the slave mode controller

Buffered registers are then loaded with their preload values.

1: UEV disabled. The Update event is not generated, shadow registers keep their value (ARR, PSC, CCRx). However the counter and the prescaler are reinitialized if the UG bit is set or if a hardware reset is received from the slave mode controller.

Bit 0 **CEN**: Counter enable

0: Counter disabled

1: Counter enabled

Note: External clock, gated mode and encoder mode can work only if the CEN bit has been previously set by software. However trigger mode can set the CEN bit automatically by hardware.

17.4.2 TIM1 and TIM8 control register 2 (TIMx_CR2)

Address offset: 0x04

Reset value: 0x0000

15	14	13	12	11	10	9	8	7	6	5	4	3	2	1	0
Res.	OIS4	OIS3N	OIS3	OIS2N	OIS2	OIS1N	OIS1	TI1S	MMS[2:0]			CCDS	CCUS	Res.	CCPC
	rw	rw	rw	rw	rw	rw	rw	rw	rw	rw	rw	rw	rw		rw

Bit 15 Reserved, must be kept at reset value.

Bit 14 **OIS4**: Output Idle state 4 (OC4 output)

refer to OIS1 bit

Bit 13 **OIS3N**: Output Idle state 3 (OC3N output)

refer to OIS1N bit

Bit 12 **OIS3**: Output Idle state 3 (OC3 output)

refer to OIS1 bit

Bit 11 **OIS2N**: Output Idle state 2 (OC2N output)

refer to OIS1N bit

Bit 10 **OIS2**: Output Idle state 2 (OC2 output)

refer to OIS1 bit

Bit 9 **OIS1N**: Output Idle state 1 (OC1N output)

0: OC1N=0 after a dead-time when MOE=0
1: OC1N=1 after a dead-time when MOE=0

Note: This bit can not be modified as long as LOCK level 1, 2 or 3 has been programmed (LOCK bits in TIMx_BDTR register).

Bit 8 **OIS1**: Output Idle state 1 (OC1 output)

0: OC1=0 (after a dead-time if OC1N is implemented) when MOE=0
1: OC1=1 (after a dead-time if OC1N is implemented) when MOE=0

Note: This bit can not be modified as long as LOCK level 1, 2 or 3 has been programmed (LOCK bits in TIMx_BDTR register).

Bit 7 **TI1S**: TI1 selection

0: The TIMx_CH1 pin is connected to TI1 input
1: The TIMx_CH1, CH2 and CH3 pins are connected to the TI1 input (XOR combination)

Bits 6:4 **MMS[2:0]**: Master mode selection

These bits allow to select the information to be sent in master mode to slave timers for synchronization (TRGO). The combination is as follows:
000: **Reset** - the UG bit from the TIMx_EGR register is used as trigger output (TRGO). If the reset is generated by the trigger input (slave mode controller configured in reset mode) then the signal on TRGO is delayed compared to the actual reset.
001: **Enable** - the Counter Enable signal CNT_EN is used as trigger output (TRGO). It is useful to start several timers at the same time or to control a window in which a slave timer is enable. The Counter Enable signal is generated by a logic OR between CEN control bit and the trigger input when configured in gated mode. When the Counter Enable signal is controlled by the trigger input, there is a delay on TRGO, except if the master/slave mode is selected (see the MSM bit description in TIMx_SMCR register).
010: **Update** - The update event is selected as trigger output (TRGO). For instance a master timer can then be used as a prescaler for a slave timer.
011: **Compare Pulse** - The trigger output send a positive pulse when the CC1IF flag is to be set (even if it was already high), as soon as a capture or a compare match occurred. (TRGO).
100: **Compare** - OC1REF signal is used as trigger output (TRGO)
101: **Compare** - OC2REF signal is used as trigger output (TRGO)
110: **Compare** - OC3REF signal is used as trigger output (TRGO)
111: **Compare** - OC4REF signal is used as trigger output (TRGO)

Note: The clock of the slave timer and ADC must be enabled prior to receiving events from the master timer, and must not be changed on-the-fly while triggers are received from the master timer.

Bit 3 **CCDS**: Capture/compare DMA selection

0: CCx DMA request sent when CCx event occurs
1: CCx DMA requests sent when update event occurs

Bit 2 **CCUS**: Capture/compare control update selection

0: When capture/compare control bits are preloaded (CCPC=1), they are updated by setting the COMG bit only

1: When capture/compare control bits are preloaded (CCPC=1), they are updated by setting the COMG bit or when an rising edge occurs on TRGI

Note: This bit acts only on channels that have a complementary output.

Bit 1 Reserved, must be kept at reset value.

Bit 0 **CCPC**: Capture/compare preloaded control

0: CCxE, CCxNE and OCxM bits are not preloaded

1: CCxE, CCxNE and OCxM bits are preloaded, after having been written, they are updated only when a commutation event (COM) occurs (COMG bit set or rising edge detected on TRGI, depending on the CCUS bit).

Note: This bit acts only on channels that have a complementary output.

17.4.3 TIM1 and TIM8 slave mode control register (TIMx_SMCR)

Address offset: 0x08

Reset value: 0x0000

15	14	13	12	11	10	9	8	7	6	5	4	3	2	1	0
ETP	ECE	ETPS[1:0]		ETF[3:0]				MSM	TS[2:0]			Res.	SMS[2:0]		
rw	rw	rw	rw	rw	rw	rw	rw	rw	rw	rw	rw	Res.	rw	rw	rw

Bit 15 **ETP**: External trigger polarity

This bit selects whether ETR or $\overline{ETR}$ is used for trigger operations
0: ETR is non-inverted, active at high level or rising edge.
1: ETR is inverted, active at low level or falling edge.

Bit 14 **ECE**: External clock enable

This bit enables External clock mode 2.
0: External clock mode 2 disabled
1: External clock mode 2 enabled. The counter is clocked by any active edge on the ETRF signal.

*Note: **1:** Setting the ECE bit has the same effect as selecting external clock mode 1 with TRGI connected to ETRF (SMS=111 and TS=111).*

***2:** It is possible to simultaneously use external clock mode 2 with the following slave modes: reset mode, gated mode and trigger mode. Nevertheless, TRGI must not be connected to ETRF in this case (TS bits must not be 111).*

***3:** If external clock mode 1 and external clock mode 2 are enabled at the same time, the external clock input is ETRF.*

Bits 13:12 **ETPS[1:0]**: External trigger prescaler

External trigger signal ETRP frequency must be at most 1/4 of TIMxCLK frequency. A prescaler can be enabled to reduce ETRP frequency. It is useful when inputting fast external clocks.
00: Prescaler OFF
01: ETRP frequency divided by 2
10: ETRP frequency divided by 4
11: ETRP frequency divided by 8

Bits 11:8 **ETF[3:0]**: External trigger filter

This bit-field then defines the frequency used to sample ETRP signal and the length of the digital filter applied to ETRP. The digital filter is made of an event counter in which N consecutive events are needed to validate a transition on the output:

0000: No filter, sampling is done at f_{DTS}
0001: $f_{SAMPLING}=f_{CK_INT}$, N=2
0010: $f_{SAMPLING}=f_{CK_INT}$, N=4
0011: $f_{SAMPLING}=f_{CK_INT}$, N=8
0100: $f_{SAMPLING}=f_{DTS}/2$, N=6
0101: $f_{SAMPLING}=f_{DTS}/2$, N=8
0110: $f_{SAMPLING}=f_{DTS}/4$, N=6
0111: $f_{SAMPLING}=f_{DTS}/4$, N=8
1000: $f_{SAMPLING}=f_{DTS}/8$, N=6
1001: $f_{SAMPLING}=f_{DTS}/8$, N=8
1010: $f_{SAMPLING}=f_{DTS}/16$, N=5
1011: $f_{SAMPLING}=f_{DTS}/16$, N=6
1100: $f_{SAMPLING}=f_{DTS}/16$, N=8
1101: $f_{SAMPLING}=f_{DTS}/32$, N=5
1110: $f_{SAMPLING}=f_{DTS}/32$, N=6
1111: $f_{SAMPLING}=f_{DTS}/32$, N=8

Bit 7 **MSM:** Master/slave mode

0: No action
1: The effect of an event on the trigger input (TRGI) is delayed to allow a perfect synchronization between the current timer and its slaves (through TRGO). It is useful if we want to synchronize several timers on a single external event.

Bits 6:4 **TS[2:0]:** Trigger selection

This bit-field selects the trigger input to be used to synchronize the counter.

000: Internal Trigger 0 (ITR0)
001: Internal Trigger 1 (ITR1)
010: Internal Trigger 2 (ITR2)
011: Internal Trigger 3 (ITR3)
100: TI1 Edge Detector (TI1F_ED)
101: Filtered Timer Input 1 (TI1FP1)
110: Filtered Timer Input 2 (TI2FP2)
111: External Trigger input (ETRF)

See *Table 94* for more details on ITRx meaning for each Timer.

Note: These bits must be changed only when they are not used (e.g. when SMS=000) to avoid wrong edge detections at the transition.

Bit 3 Reserved, must be kept at reset value.

Bits 2:0 **SMS:** Slave mode selection

When external signals are selected the active edge of the trigger signal (TRGI) is linked to the polarity selected on the external input (see Input Control register and Control Register description.

000: Slave mode disabled - if CEN = '1' then the prescaler is clocked directly by the internal clock.

001: Encoder mode 1 - Counter counts up/down on TI2FP1 edge depending on TI1FP2 level.

010: Encoder mode 2 - Counter counts up/down on TI1FP2 edge depending on TI2FP1 level.

011: Encoder mode 3 - Counter counts up/down on both TI1FP1 and TI2FP2 edges depending on the level of the other input.

100: Reset Mode - Rising edge of the selected trigger input (TRGI) reinitializes the counter and generates an update of the registers.

101: Gated Mode - The counter clock is enabled when the trigger input (TRGI) is high. The counter stops (but is not reset) as soon as the trigger becomes low. Both start and stop of the counter are controlled.

110: Trigger Mode - The counter starts at a rising edge of the trigger TRGI (but it is not reset). Only the start of the counter is controlled.

111: External Clock Mode 1 - Rising edges of the selected trigger (TRGI) clock the counter.

Note: The gated mode must not be used if TI1F_ED is selected as the trigger input (TS='100'). Indeed, TI1F_ED outputs 1 pulse for each transition on TI1F, whereas the gated mode checks the level of the trigger signal.

The clock of the slave timer must be enabled prior to receiving events from the master timer, and must not be changed on-the-fly while triggers are received from the master timer.

Table 94. TIMx Internal trigger connection

Slave TIM	ITR0 (TS = 000)	ITR1 (TS = 001)	ITR2 (TS = 010)	ITR3 (TS = 011)
TIM1	TIM5_TRGO	TIM2_TRGO	TIM3_TRGO	TIM4_TRGO
TIM8	TIM1_TRGO	TIM2_TRGO	TIM4_TRGO	TIM5_TRGO

17.4.4 TIM1 and TIM8 DMA/interrupt enable register (TIMx_DIER)

Address offset: 0x0C

Reset value: 0x0000

15	14	13	12	11	10	9	8	7	6	5	4	3	2	1	0
Res.	TDE	COMDE	CC4DE	CC3DE	CC2DE	CC1DE	UDE	BIE	TIE	COMIE	CC4IE	CC3IE	CC2IE	CC1IE	UIE
	rw	rw	rw	rw	rw	rw	rw	rw	rw	rw	rw	rw	rw	rw	rw

Bit 15 Reserved, must be kept at reset value.

Bit 14 **TDE**: Trigger DMA request enable

0: Trigger DMA request disabled

1: Trigger DMA request enabled

Bit 13 **COMDE**: COM DMA request enable

0: COM DMA request disabled

1: COM DMA request enabled

Bit 12 **CC4DE**: Capture/Compare 4 DMA request enable
0: CC4 DMA request disabled
1: CC4 DMA request enabled

Bit 11 **CC3DE**: Capture/Compare 3 DMA request enable
0: CC3 DMA request disabled
1: CC3 DMA request enabled

Bit 10 **CC2DE**: Capture/Compare 2 DMA request enable
0: CC2 DMA request disabled
1: CC2 DMA request enabled

Bit 9 **CC1DE**: Capture/Compare 1 DMA request enable
0: CC1 DMA request disabled
1: CC1 DMA request enabled

Bit 8 **UDE**: Update DMA request enable
0: Update DMA request disabled
1: Update DMA request enabled

Bit 7 **BIE**: Break interrupt enable
0: Break interrupt disabled
1: Break interrupt enabled

Bit 6 **TIE**: Trigger interrupt enable
0: Trigger interrupt disabled
1: Trigger interrupt enabled

Bit 5 **COMIE**: COM interrupt enable
0: COM interrupt disabled
1: COM interrupt enabled

Bit 4 **CC4IE**: Capture/Compare 4 interrupt enable
0: CC4 interrupt disabled
1: CC4 interrupt enabled

Bit 3 **CC3IE**: Capture/Compare 3 interrupt enable
0: CC3 interrupt disabled
1: CC3 interrupt enabled

Bit 2 **CC2IE**: Capture/Compare 2 interrupt enable
0: CC2 interrupt disabled
1: CC2 interrupt enabled

Bit 1 **CC1IE**: Capture/Compare 1 interrupt enable
0: CC1 interrupt disabled
1: CC1 interrupt enabled

Bit 0 **UIE**: Update interrupt enable
0: Update interrupt disabled
1: Update interrupt enabled

17.4.5 TIM1 and TIM8 status register (TIMx_SR)

Address offset: 0x10

Reset value: 0x0000

15	14	13	12	11	10	9	8	7	6	5	4	3	2	1	0
Reserved			CC4OF	CC3OF	CC2OF	CC1OF	Res.	BIF	TIF	COMIF	CC4IF	CC3IF	CC2IF	CC1IF	UIF
			rc_w0	rc_w0	rc_w0	rc_w0	Res.	rc_w0	rc_w0	rc_w0	rc_w0	rc_w0	rc_w0	rc_w0	rc_w0

Bits 15:13 Reserved, must be kept at reset value.

Bit 12 **CC4OF**: Capture/Compare 4 overcapture flag
refer to CC1OF description

Bit 11 **CC3OF**: Capture/Compare 3 overcapture flag
refer to CC1OF description

Bit 10 **CC2OF**: Capture/Compare 2 overcapture flag
refer to CC1OF description

Bit 9 **CC1OF**: Capture/Compare 1 overcapture flag
This flag is set by hardware only when the corresponding channel is configured in input capture mode. It is cleared by software by writing it to ‘0’.
0: No overcapture has been detected.
1: The counter value has been captured in TIMx_CCR1 register while CC1IF flag was already set

Bit 8 Reserved, must be kept at reset value.

Bit 7 **BIF**: Break interrupt flag
This flag is set by hardware as soon as the break input goes active. It can be cleared by software if the break input is not active.
0: No break event occurred.
1: An active level has been detected on the break input.

Bit 6 **TIF**: Trigger interrupt flag
This flag is set by hardware on trigger event (active edge detected on TRGI input when the slave mode controller is enabled in all modes but gated mode. It is set when the counter starts or stops when gated mode is selected. It is cleared by software.
0: No trigger event occurred.
1: Trigger interrupt pending.

Bit 5 **COMIF**: COM interrupt flag
This flag is set by hardware on COM event (when Capture/compare Control bits - CCxE, CCxNE, OCxM - have been updated). It is cleared by software.
0: No COM event occurred.
1: COM interrupt pending.

Bit 4 **CC4IF**: Capture/Compare 4 interrupt flag
refer to CC1IF description

Bit 3 **CC3IF**: Capture/Compare 3 interrupt flag
refer to CC1IF description

Bit 2 **CC2IF**: Capture/Compare 2 interrupt flag
refer to CC1IF description

Bit 1 **CC1IF**: Capture/Compare 1 interrupt flag
If channel CC1 is configured as output:
This flag is set by hardware when the counter matches the compare value, with some exception in center-aligned mode (refer to the CMS bits in the TIMx_CR1 register description). It is cleared by software.
0: No match.
1: The content of the counter TIMx_CNT matches the content of the TIMx_CCR1 register. When the contents of TIMx_CCR1 are greater than the contents of TIMx_ARR, the CC1IF bit goes high on the counter overflow (in upcounting and up/down-counting modes) or underflow (in downcounting mode)
If channel CC1 is configured as input:
This bit is set by hardware on a capture. It is cleared by software or by reading the TIMx_CCR1 register.
0: No input capture occurred
1: The counter value has been captured in TIMx_CCR1 register (An edge has been detected on IC1 which matches the selected polarity)

Bit 0 **UIF**: Update interrupt flag
This bit is set by hardware on an update event. It is cleared by software.
0: No update occurred.
1: Update interrupt pending. This bit is set by hardware when the registers are updated:
– At overflow or underflow regarding the repetition counter value (update if repetition counter = 0) and if the UDIS=0 in the TIMx_CR1 register.
– When CNT is reinitialized by software using the UG bit in TIMx_EGR register, if URS=0 and UDIS=0 in the TIMx_CR1 register.
– When CNT is reinitialized by a trigger event (refer to *Section 17.4.3: TIM1 and TIM8 slave mode control register (TIMx_SMCR)*), if URS=0 and UDIS=0 in the TIMx_CR1 register.

17.4.6 TIM1 and TIM8 event generation register (TIMx_EGR)

Address offset: 0x14

Reset value: 0x0000

15	14	13	12	11	10	9	8	7	6	5	4	3	2	1	0
Reserved								BG	TG	COMG	CC4G	CC3G	CC2G	CC1G	UG
								w	w	w	w	w	w	w	w

Bits 15:8 Reserved, must be kept at reset value.

Bit 7 **BG**: Break generation
This bit is set by software in order to generate an event, it is automatically cleared by hardware.
0: No action
1: A break event is generated. MOE bit is cleared and BIF flag is set. Related interrupt or DMA transfer can occur if enabled.

Bit 6 **TG**: Trigger generation
This bit is set by software in order to generate an event, it is automatically cleared by hardware.
0: No action
1: The TIF flag is set in TIMx_SR register. Related interrupt or DMA transfer can occur if enabled.

Bit 5 **COMG**: Capture/Compare control update generation

This bit can be set by software, it is automatically cleared by hardware
0: No action
1: When CCPC bit is set, it allows to update CCxE, CCxNE and OCxM bits

Note: This bit acts only on channels having a complementary output.

Bit 4 **CC4G**: Capture/Compare 4 generation

refer to CC1G description

Bit 3 **CC3G**: Capture/Compare 3 generation

refer to CC1G description

Bit 2 **CC2G**: Capture/Compare 2 generation

refer to CC1G description

Bit 1 **CC1G**: Capture/Compare 1 generation

This bit is set by software in order to generate an event, it is automatically cleared by hardware.
0: No action
1: A capture/compare event is generated on channel 1:
If channel CC1 is configured as output:
CC1IF flag is set, Corresponding interrupt or DMA request is sent if enabled.
If channel CC1 is configured as input:
The current value of the counter is captured in TIMx_CCR1 register. The CC1IF flag is set, the corresponding interrupt or DMA request is sent if enabled. The CC1OF flag is set if the CC1IF flag was already high.

Bit 0 **UG**: Update generation

This bit can be set by software, it is automatically cleared by hardware.
0: No action
1: Reinitialize the counter and generates an update of the registers. Note that the prescaler counter is cleared too (anyway the prescaler ratio is not affected). The counter is cleared if the center-aligned mode is selected or if DIR=0 (upcounting), else it takes the auto-reload value (TIMx_ARR) if DIR=1 (downcounting).

17.4.7 TIM1 and TIM8 capture/compare mode register 1 (TIMx_CCMR1)

Address offset: 0x18

Reset value: 0x0000

The channels can be used in input (capture mode) or in output (compare mode). The direction of a channel is defined by configuring the corresponding CCxS bits. All the other bits of this register have a different function in input and in output mode. For a given bit, OCxx describes its function when the channel is configured in output, ICxx describes its function when the channel is configured in input. So the user must take care that the same bit can have a different meaning for the input stage and for the output stage.

15	14	13	12	11	10	9	8	7	6	5	4	3	2	1	0
OC2 CE	OC2M[2:0]			OC2 PE	OC2 FE	CC2S[1:0]		OC1 CE	OC1M[2:0]			OC1 PE	OC1 FE	CC1S[1:0]	
IC2F[3:0]				IC2PSC[1:0]				IC1F[3:0]				IC1PSC[1:0]			
rw	rw	rw	rw	rw	rw	rw	rw	rw	rw	rw	rw	rw	rw	rw	rw

Output compare mode:

Bit 15 **OC2CE:** Output Compare 2 clear enable

Bits 14:12 **OC2M[2:0]**: Output Compare 2 mode

Bit 11 **OC2PE**: Output Compare 2 preload enable

Bit 10 **OC2FE**: Output Compare 2 fast enable

Bits 9:8 **CC2S[1:0]**: Capture/Compare 2 selection

This bit-field defines the direction of the channel (input/output) as well as the used input.
00: CC2 channel is configured as output
01: CC2 channel is configured as input, IC2 is mapped on TI2
10: CC2 channel is configured as input, IC2 is mapped on TI1
11: CC2 channel is configured as input, IC2 is mapped on TRC. This mode is working only if an internal trigger input is selected through the TS bit (TIMx_SMCR register)

Note: CC2S bits are writable only when the channel is OFF (CC2E = '0' in TIMx_CCER).

Bit 7 **OC1CE:** Output Compare 1 clear enable

OC1CE: Output Compare 1 Clear Enable
0: OC1Ref is not affected by the ETRF Input
1: OC1Ref is cleared as soon as a High level is detected on ETRF input

Bits 6:4 **OC1M**: Output Compare 1 mode

These bits define the behavior of the output reference signal OC1REF from which OC1 and OC1N are derived. OC1REF is active high whereas OC1 and OC1N active level depends on CC1P and CC1NP bits.
000: Frozen - The comparison between the output compare register TIMx_CCR1 and the counter TIMx_CNT has no effect on the outputs.(this mode is used to generate a timing base).
001: Set channel 1 to active level on match. OC1REF signal is forced high when the counter TIMx_CNT matches the capture/compare register 1 (TIMx_CCR1).
010: Set channel 1 to inactive level on match. OC1REF signal is forced low when the counter TIMx_CNT matches the capture/compare register 1 (TIMx_CCR1).
011: Toggle - OC1REF toggles when TIMx_CNT=TIMx_CCR1.
100: Force inactive level - OC1REF is forced low.
101: Force active level - OC1REF is forced high.
110: PWM mode 1 - In upcounting, channel 1 is active as long as TIMx_CNT<TIMx_CCR1 else inactive. In downcounting, channel 1 is inactive (OC1REF=‘0’) as long as TIMx_CNT>TIMx_CCR1 else active (OC1REF=’1’).
111: PWM mode 2 - In upcounting, channel 1 is inactive as long as TIMx_CNT<TIMx_CCR1 else active. In downcounting, channel 1 is active as long as TIMx_CNT>TIMx_CCR1 else inactive.

*Note: **1:** These bits can not be modified as long as LOCK level 3 has been programmed (LOCK bits in TIMx_BDTR register) and CC1S=’00’ (the channel is configured in output).*

__2:__ In PWM mode 1 or 2, the OCREF level changes only when the result of the comparison changes or when the output compare mode switches from “frozen” mode to “PWM” mode.

3: On channels having a complementary output, this bit field is preloaded. If the CCPC bit is set in the TIMx_CR2 register then the OC1M active bits take the new value from the preloaded bits only when a COM event is generated.

Bit 3 **OC1PE**: Output Compare 1 preload enable

0: Preload register on TIMx_CCR1 disabled. TIMx_CCR1 can be written at anytime, the new value is taken in account immediately.
1: Preload register on TIMx_CCR1 enabled. Read/Write operations access the preload register. TIMx_CCR1 preload value is loaded in the active register at each update event.

*Note: **1:** These bits can not be modified as long as LOCK level 3 has been programmed (LOCK bits in TIMx_BDTR register) and CC1S=’00’ (the channel is configured in output).*

__2:__ The PWM mode can be used without validating the preload register only in one pulse mode (OPM bit set in TIMx_CR1 register). Else the behavior is not guaranteed.

Bit 2 **OC1FE**: Output Compare 1 fast enable

This bit is used to accelerate the effect of an event on the trigger in input on the CC output.
0: CC1 behaves normally depending on counter and CCR1 values even when the trigger is ON. The minimum delay to activate CC1 output when an edge occurs on the trigger input is 5 clock cycles.
1: An active edge on the trigger input acts like a compare match on CC1 output. Then, OC is set to the compare level independently from the result of the comparison. Delay to sample the trigger input and to activate CC1 output is reduced to 3 clock cycles. OCFE acts only if the channel is configured in PWM1 or PWM2 mode.

Bits 1:0 **CC1S**: Capture/Compare 1 selection

This bit-field defines the direction of the channel (input/output) as well as the used input.
00: CC1 channel is configured as output
01: CC1 channel is configured as input, IC1 is mapped on TI1
10: CC1 channel is configured as input, IC1 is mapped on TI2
11: CC1 channel is configured as input, IC1 is mapped on TRC. This mode is working only if an internal trigger input is selected through TS bit (TIMx_SMCR register)

Note: CC1S bits are writable only when the channel is OFF (CC1E = '0' in TIMx_CCER).

Input capture mode

Bits 15:12 **IC2F**: Input capture 2 filter

Bits 11:10 **IC2PSC[1:0]**: Input capture 2 prescaler

Bits 9:8 **CC2S**: Capture/Compare 2 selection

This bit-field defines the direction of the channel (input/output) as well as the used input.
00: CC2 channel is configured as output
01: CC2 channel is configured as input, IC2 is mapped on TI2
10: CC2 channel is configured as input, IC2 is mapped on TI1
11: CC2 channel is configured as input, IC2 is mapped on TRC. This mode is working only if an internal trigger input is selected through TS bit (TIMx_SMCR register)

Note: CC2S bits are writable only when the channel is OFF (CC2E = '0' in TIMx_CCER).

Bits 7:4 **IC1F[3:0]**: Input capture 1 filter

This bit-field defines the frequency used to sample TI1 input and the length of the digital filter applied to TI1. The digital filter is made of an event counter in which N consecutive events are needed to validate a transition on the output:
0000: No filter, sampling is done at f_{DTS}
0001: $f_{SAMPLING}=f_{CK_INT}$, N=2
0010: $f_{SAMPLING}=f_{CK_INT}$, N=4
0011: $f_{SAMPLING}=f_{CK_INT}$, N=8
0100: $f_{SAMPLING}=f_{DTS}/2$, N=6
0101: $f_{SAMPLING}=f_{DTS}/2$, N=8
0110: $f_{SAMPLING}=f_{DTS}/4$, N=6
0111: $f_{SAMPLING}=f_{DTS}/4$, N=8
1000: $f_{SAMPLING}=f_{DTS}/8$, N=6
1001: $f_{SAMPLING}=f_{DTS}/8$, N=8
1010: $f_{SAMPLING}=f_{DTS}/16$, N=5
1011: $f_{SAMPLING}=f_{DTS}/16$, N=6
1100: $f_{SAMPLING}=f_{DTS}/16$, N=8
1101: $f_{SAMPLING}=f_{DTS}/32$, N=5
1110: $f_{SAMPLING}=f_{DTS}/32$, N=6
1111: $f_{SAMPLING}=f_{DTS}/32$, N=8

Bits 3:2 **IC1PSC**: Input capture 1 prescaler

This bit-field defines the ratio of the prescaler acting on CC1 input (IC1).
The prescaler is reset as soon as CC1E='0' (TIMx_CCER register).
00: no prescaler, capture is done each time an edge is detected on the capture input
01: capture is done once every 2 events
10: capture is done once every 4 events
11: capture is done once every 8 events

Bits 1:0 **CC1S**: Capture/Compare 1 Selection

This bit-field defines the direction of the channel (input/output) as well as the used input.
00: CC1 channel is configured as output
01: CC1 channel is configured as input, IC1 is mapped on TI1
10: CC1 channel is configured as input, IC1 is mapped on TI2
11: CC1 channel is configured as input, IC1 is mapped on TRC. This mode is working only if an internal trigger input is selected through TS bit (TIMx_SMCR register)

Note: CC1S bits are writable only when the channel is OFF (CC1E = '0' in TIMx_CCER).

17.4.8 TIM1 and TIM8 capture/compare mode register 2 (TIMx_CCMR2)

Address offset: 0x1C

Reset value: 0x0000

Refer to the above CCMR1 register description.

15	14	13	12	11	10	9	8	7	6	5	4	3	2	1	0
OC4 CE	OC4M[2:0]			OC4 PE	OC4 FE	CC4S[1:0]		OC3 CE.	OC3M[2:0]			OC3 PE	OC3 FE	CC3S[1:0]	
IC4F[3:0]				IC4PSC[1:0]				IC3F[3:0]				IC3PSC[1:0]			
rw	rw	rw	rw	rw	rw	rw	rw	rw	rw	rw	rw	rw	rw	rw	rw

Output compare mode

Bit 15 OC4CE: Output compare 4 clear enable

Bits 14:12 **OC4M**: Output compare 4 mode

Bit 11 **OC4PE**: Output compare 4 preload enable

Bit 10 **OC4FE**: Output compare 4 fast enable

Bits 9:8 **CC4S**: Capture/Compare 4 selection

This bit-field defines the direction of the channel (input/output) as well as the used input.
00: CC4 channel is configured as output
01: CC4 channel is configured as input, IC4 is mapped on TI4
10: CC4 channel is configured as input, IC4 is mapped on TI3
11: CC4 channel is configured as input, IC4 is mapped on TRC. This mode is working only if an internal trigger input is selected through TS bit (TIMx_SMCR register)

Note: CC4S bits are writable only when the channel is OFF (CC4E = '0' in TIMx_CCER).

Bit 7 **OC3CE:** Output compare 3 clear enable

Bits 6:4 **OC3M**: Output compare 3 mode

Bit 3 **OC3PE**: Output compare 3 preload enable

Bit 2 **OC3FE**: Output compare 3 fast enable

Bits 1:0 **CC3S**: Capture/Compare 3 selection

This bit-field defines the direction of the channel (input/output) as well as the used input.
00: CC3 channel is configured as output
01: CC3 channel is configured as input, IC3 is mapped on TI3
10: CC3 channel is configured as input, IC3 is mapped on TI4
11: CC3 channel is configured as input, IC3 is mapped on TRC. This mode is working only if an internal trigger input is selected through TS bit (TIMx_SMCR register)

Note: CC3S bits are writable only when the channel is OFF (CC3E = '0' in TIMx_CCER).

Input capture mode

Bits 15:12 **IC4F**: Input capture 4 filter

Bits 11:10 **IC4PSC**: Input capture 4 prescaler

Bits 9:8 **CC4S**: Capture/Compare 4 selection

This bit-field defines the direction of the channel (input/output) as well as the used input.
00: CC4 channel is configured as output
01: CC4 channel is configured as input, IC4 is mapped on TI4
10: CC4 channel is configured as input, IC4 is mapped on TI3
11: CC4 channel is configured as input, IC4 is mapped on TRC. This mode is working only if an internal trigger input is selected through TS bit (TIMx_SMCR register)

Note: CC4S bits are writable only when the channel is OFF (CC4E = '0' in TIMx_CCER).

Bits 7:4 **IC3F**: Input capture 3 filter

Bits 3:2 **IC3PSC**: Input capture 3 prescaler

Bits 1:0 **CC3S**: Capture/compare 3 selection

This bit-field defines the direction of the channel (input/output) as well as the used input.
00: CC3 channel is configured as output
01: CC3 channel is configured as input, IC3 is mapped on TI3
10: CC3 channel is configured as input, IC3 is mapped on TI4
11: CC3 channel is configured as input, IC3 is mapped on TRC. This mode is working only if an internal trigger input is selected through TS bit (TIMx_SMCR register)

Note: CC3S bits are writable only when the channel is OFF (CC3E = '0' in TIMx_CCER).

17.4.9 TIM1 and TIM8 capture/compare enable register (TIMx_CCER)

Address offset: 0x20

Reset value: 0x0000

15	14	13	12	11	10	9	8	7	6	5	4	3	2	1	0
Reserved		CC4P	CC4E	CC3NP	CC3NE	CC3P	CC3E	CC2NP	CC2NE	CC2P	CC2E	CC1NP	CC1NE	CC1P	CC1E
		rw	rw	rw	rw	rw	rw	rw	rw	rw	rw	rw	rw	rw	rw

Bits 15:14 Reserved, must be kept at reset value.

Bit 13 **CC4P**: Capture/Compare 4 output polarity
refer to CC1P description

Bit 12 **CC4E**: Capture/Compare 4 output enable
refer to CC1E description

Bit 11 **CC3NP**: Capture/Compare 3 complementary output polarity
refer to CC1NP description

Bit 10 **CC3NE**: Capture/Compare 3 complementary output enable
refer to CC1NE description

Bit 9 **CC3P**: Capture/Compare 3 output polarity
refer to CC1P description

Bit 8 **CC3E**: Capture/Compare 3 output enable
refer to CC1E description

Bit 7 **CC2NP**: Capture/Compare 2 complementary output polarity
refer to CC1NP description

Bit 6 **CC2NE**: Capture/Compare 2 complementary output enable
refer to CC1NE description

Bit 5 **CC2P**: Capture/Compare 2 output polarity
refer to CC1P description

Bit 4 **CC2E**: Capture/Compare 2 output enable
refer to CC1E description

Bit 3 **CC1NP**: Capture/Compare 1 complementary output polarity
CC1 channel configured as output:
0: OC1N active high.
1: OC1N active low.
CC1 channel configured as input:
This bit is used in conjunction with CC1P to define the polarity of TI1FP1 and TI2FP1. Refer to CC1P description.

Note: On channels having a complementary output, this bit is preloaded. If the CCPC bit is set in the TIMx_CR2 register then the CC1NP active bit takes the new value from the preloaded bit only when a Commutation event is generated.

Note: This bit is not writable as soon as LOCK level 2 or 3 has been programmed (LOCK bits in TIMx_BDTR register) and CC1S="00" (the channel is configured in output).

Bit 2 **CC1NE**: Capture/Compare 1 complementary output enable
0: Off - OC1N is not active. OC1N level is then function of MOE, OSSI, OSSR, OIS1, OIS1N and CC1E bits.
1: On - OC1N signal is output on the corresponding output pin depending on MOE, OSSI, OSSR, OIS1, OIS1N and CC1E bits.

Note: On channels having a complementary output, this bit is preloaded. If the CCPC bit is set in the TIMx_CR2 register then the CC1NE active bit takes the new value from the preloaded bit only when a Commutation event is generated.

Bit 1 **CC1P**: Capture/Compare 1 output polarity

CC1 channel configured as output:

0: OC1 active high

1: OC1 active low

CC1 channel configured as input:

CC1NP/CC1P bits select the active polarity of TI1FP1 and TI2FP1 for trigger or capture operations.

00: non-inverted/rising edge

The circuit is sensitive to TIxFP1 rising edge (capture or trigger operations in reset, external clock or trigger mode), TIxFP1 is not inverted (trigger operation in gated mode or encoder mode).

01: inverted/falling edge

The circuit is sensitive to TIxFP1 falling edge (capture or trigger operations in reset, external clock or trigger mode), TIxFP1 is inverted (trigger operation in gated mode or encoder mode).

10: reserved, do not use this configuration.

11: non-inverted/both edges

The circuit is sensitive to both TIxFP1 rising and falling edges (capture or trigger operations in reset, external clock or trigger mode), TIxFP1 is not inverted (trigger operation in gated mode). This configuration must not be used in encoder mode.

Note: On channels having a complementary output, this bit is preloaded. If the CCPC bit is set in the TIMx_CR2 register then the CC1P active bit takes the new value from the preloaded bit only when a Commutation event is generated.

Note: This bit is not writable as soon as LOCK level 2 or 3 has been programmed (LOCK bits in TIMx_BDTR register).

Bit 0 **CC1E**: Capture/Compare 1 output enable

CC1 channel configured as output:

0: Off - OC1 is not active. OC1 level is then function of MOE, OSSI, OSSR, OIS1, OIS1N and CC1NE bits.

1: On - OC1 signal is output on the corresponding output pin depending on MOE, OSSI, OSSR, OIS1, OIS1N and CC1NE bits.

CC1 channel configured as input:

This bit determines if a capture of the counter value can actually be done into the input capture/compare register 1 (TIMx_CCR1) or not.

0: Capture disabled.

1: Capture enabled.

Note: On channels having a complementary output, this bit is preloaded. If the CCPC bit is set in the TIMx_CR2 register then the CC1E active bit takes the new value from the preloaded bit only when a Commutation event is generated.

Table 95. Output control bits for complementary OCx and OCxN channels with break feature

Control bits					Output states[1]	
MOE bit	OSSI bit	OSSR bit	CCxE bit	CCxNE bit	OCx output state	OCxN output state
1	X	0	0	0	Output Disabled (not driven by the timer), OCx=0, OCx_EN=0	Output Disabled (not driven by the timer), OCxN=0, OCxN_EN=0
		0	0	1	Output Disabled (not driven by the timer), OCx=0, OCx_EN=0	OCxREF + Polarity OCxN=OCxREF xor CCxNP, OCxN_EN=1
		0	1	0	OCxREF + Polarity OCx=OCxREF xor CCxP, OCx_EN=1	Output Disabled (not driven by the timer) OCxN=0, OCxN_EN=0
		0	1	1	OCREF + Polarity + dead-time OCx_EN=1	Complementary to OCREF (not OCREF) + Polarity + dead-time OCxN_EN=1
		1	0	0	Output Disabled (not driven by the timer) OCx=CCxP, OCx_EN=0	Output Disabled (not driven by the timer) OCxN=CCxNP, OCxN_EN=0
		1	0	1	Off-State (output enabled with inactive state) OCx=CCxP, OCx_EN=1	OCxREF + Polarity OCxN=OCxREF xor CCxNP, OCxN_EN=1
		1	1	0	OCxREF + Polarity OCx=OCxREF xor CCxP, OCx_EN=1	Off-State (output enabled with inactive state) OCxN=CCxNP, OCxN_EN=1
		1	1	1	OCREF + Polarity + dead-time OCx_EN=1	Complementary to OCREF (not OCREF) + Polarity + dead-time OCxN_EN=1
0	0	X	X	X	Output disabled (not driven by the timer anymore). The output state is defined by the GPIO controller and can be High, Low or Hi-Z.	
	1		0	0		
			0	1	Off-State (output enabled with inactive state) Asynchronously: OCx=CCxP, OCx_EN=1, OCxN=CCxNP, OCxN_EN=1 Then if the clock is present: OCx=OISx and OCxN=OISxN after a dead-time, assuming that OISx and OISxN do not correspond to OCX and OCxN both in active state	
			1	0		
			1	1		

1. When both outputs of a channel are not used (CCxE = CCxNE = 0), the OISx, OISxN, CCxP and CCxNP bits must be kept cleared.

Note: The state of the external I/O pins connected to the complementary OCx and OCxN channels depends on the OCx and OCxN channel state and the GPIO registers.

17.4.10 TIM1 and TIM8 counter (TIMx_CNT)

Address offset: 0x24

Reset value: 0x0000

15	14	13	12	11	10	9	8	7	6	5	4	3	2	1	0
CNT[15:0]															
rw	rw	rw	rw	rw	rw	rw	rw	rw	rw	rw	rw	rw	rw	rw	rw

Bits 15:0 **CNT[15:0]**: Counter value

17.4.11 TIM1 and TIM8 prescaler (TIMx_PSC)

Address offset: 0x28

Reset value: 0x0000

15	14	13	12	11	10	9	8	7	6	5	4	3	2	1	0
PSC[15:0]															
rw	rw	rw	rw	rw	rw	rw	rw	rw	rw	rw	rw	rw	rw	rw	rw

Bits 15:0 **PSC[15:0]**: Prescaler value

The counter clock frequency (CK_CNT) is equal to f_{CK_PSC} / (PSC[15:0] + 1).
PSC contains the value to be loaded in the active prescaler register at each update event (including when the counter is cleared through UG bit of TIMx_EGR register or through trigger controller when configured in “reset mode”).

17.4.12 TIM1 and TIM8 auto-reload register (TIMx_ARR)

Address offset: 0x2C

Reset value: 0xFFFF

15	14	13	12	11	10	9	8	7	6	5	4	3	2	1	0
ARR[15:0]															
rw	rw	rw	rw	rw	rw	rw	rw	rw	rw	rw	rw	rw	rw	rw	rw

Bits 15:0 **ARR[15:0]**: Auto-reload value

ARR is the value to be loaded in the actual auto-reload register.
Refer to *Section 17.3.1: Time-base unit* for more details about ARR update and behavior.
The counter is blocked while the auto-reload value is null.

17.4.13 TIM1 and TIM8 repetition counter register (TIMx_RCR)

Address offset: 0x30

Reset value: 0x0000

15	14	13	12	11	10	9	8	7	6	5	4	3	2	1	0
Reserved								REP[7:0]							
								rw	rw	rw	rw	rw	rw	rw	rw

Bits 15:8 Reserved, must be kept at reset value.

Bits 7:0 **REP[7:0]**: Repetition counter value

These bits allow the user to set-up the update rate of the compare registers (i.e. periodic transfers from preload to active registers) when preload registers are enable, as well as the update interrupt generation rate, if this interrupt is enable.

Each time the REP_CNT related downcounter reaches zero, an update event is generated and it restarts counting from REP value. As REP_CNT is reloaded with REP value only at the repetition update event U_RC, any write to the TIMx_RCR register is not taken in account until the next repetition update event.

It means in PWM mode (REP+1) corresponds to:

- the number of PWM periods in edge-aligned mode
- the number of half PWM period in center-aligned mode.

17.4.14 TIM1 and TIM8 capture/compare register 1 (TIMx_CCR1)

Address offset: 0x34

Reset value: 0x0000

15	14	13	12	11	10	9	8	7	6	5	4	3	2	1	0
CCR1[15:0]															
rw/ro	rw/ro	rw/ro	rw/ro	rw/ro	rw/ro	rw/ro	rw/ro	rw/ro	rw/ro	rw/ro	rw/ro	rw/ro	rw/ro	rw/ro	rw/ro

Bits 15:0 **CCR1[15:0]**: Capture/Compare 1 value

If channel CC1 is configured as output:

CCR1 is the value to be loaded in the actual capture/compare 1 register (preload value).

It is loaded permanently if the preload feature is not selected in the TIMx_CCMR1 register (bit OC1PE). Else the preload value is copied in the active capture/compare 1 register when an update event occurs.

The active capture/compare register contains the value to be compared to the counter TIMx_CNT and signaled on OC1 output.

If channel CC1 is configured as input:

CCR1 is the counter value transferred by the last input capture 1 event (IC1). The TIMx_CCR1 register is read-only and cannot be programmed.

17.4.15 TIM1 and TIM8 capture/compare register 2 (TIMx_CCR2)

Address offset: 0x38

Reset value: 0x0000

15	14	13	12	11	10	9	8	7	6	5	4	3	2	1	0
CCR2[15:0]															
rw/ro	rw/ro	rw/ro	rw/ro	rw/ro	rw/ro	rw/ro	rw/ro	rw/ro	rw/ro	rw/ro	rw/ro	rw/ro	rw/ro	rw/ro	rw/ro

Bits 15:0 **CCR2[15:0]**: Capture/Compare 2 value

If channel CC2 is configured as output:
CCR2 is the value to be loaded in the actual capture/compare 2 register (preload value).
It is loaded permanently if the preload feature is not selected in the TIMx_CCMR2 register (bit OC2PE). Else the preload value is copied in the active capture/compare 2 register when an update event occurs.
The active capture/compare register contains the value to be compared to the counter TIMx_CNT and signalled on OC2 output.

If channel CC2 is configured as input:
CCR2 is the counter value transferred by the last input capture 2 event (IC2). The TIMx_CCR2 register is read-only and cannot be programmed.

17.4.16 TIM1 and TIM8 capture/compare register 3 (TIMx_CCR3)

Address offset: 0x3C

Reset value: 0x0000

15	14	13	12	11	10	9	8	7	6	5	4	3	2	1	0
CCR3[15:0]															
rw/ro	rw/ro	rw/ro	rw/ro	rw/ro	rw/ro	rw/ro	rw/ro	rw/ro	rw/ro	rw/ro	rw/ro	rw/ro	rw/ro	rw/ro	rw/ro

Bits 15:0 **CCR3[15:0]**: Capture/Compare value

If channel CC3 is configured as output:
CCR3 is the value to be loaded in the actual capture/compare 3 register (preload value).
It is loaded permanently if the preload feature is not selected in the TIMx_CCMR3 register (bit OC3PE). Else the preload value is copied in the active capture/compare 3 register when an update event occurs.
The active capture/compare register contains the value to be compared to the counter TIMx_CNT and signalled on OC3 output.

If channel CC3 is configured as input:
CCR3 is the counter value transferred by the last input capture 3 event (IC3). The TIMx_CCR3 register is read-only and cannot be programmed.

17.4.17 TIM1 and TIM8 capture/compare register 4 (TIMx_CCR4)

Address offset: 0x40

Reset value: 0x0000

15	14	13	12	11	10	9	8	7	6	5	4	3	2	1	0
CCR4[15:0]															
rw/ro	rw/ro	rw/ro	rw/ro	rw/ro	rw/ro	rw/ro	rw/ro	rw/ro	rw/ro	rw/ro	rw/ro	rw/ro	rw/ro	rw/ro	rw/ro

Bits 15:0 **CCR4[15:0]**: Capture/Compare value

If channel CC4 is configured as output:

CCR4 is the value to be loaded in the actual capture/compare 4 register (preload value).

It is loaded permanently if the preload feature is not selected in the TIMx_CCMR4 register (bit OC4PE). Else the preload value is copied in the active capture/compare 4 register when an update event occurs.

The active capture/compare register contains the value to be compared to the counter TIMx_CNT and signalled on OC4 output.

If channel CC4 is configured as input:

CCR4 is the counter value transferred by the last input capture 4 event (IC4). The TIMx_CCR3 register is read-only and cannot be programmed.

17.4.18 TIM1 and TIM8 break and dead-time register (TIMx_BDTR)

Address offset: 0x44

Reset value: 0x0000

15	14	13	12	11	10	9	8	7	6	5	4	3	2	1	0
MOE	AOE	BKP	BKE	OSSR	OSSI	LOCK[1:0]		DTG[7:0]							
rw	rw	rw	rw	rw	rw	rw	rw	rw	rw	rw	rw	rw	rw	rw	rw

Note: As the bits AOE, BKP, BKE, OSSI, OSSR and DTG[7:0] can be write-locked depending on the LOCK configuration, it can be necessary to configure all of them during the first write access to the TIMx_BDTR register.

Bit 15 **MOE**: Main output enable

This bit is cleared asynchronously by hardware as soon as the break input is active. It is set by software or automatically depending on the AOE bit. It is acting only on the channels which are configured in output.

0: OC and OCN outputs are disabled or forced to idle state.

1: OC and OCN outputs are enabled if their respective enable bits are set (CCxE, CCxNE in TIMx_CCER register).

See OC/OCN enable description for more details (*Section 17.4.9: TIM1 and TIM8 capture/compare enable register (TIMx_CCER)*).

Bit 14 **AOE**: Automatic output enable

0: MOE can be set only by software

1: MOE can be set by software or automatically at the next update event (if the break input is not be active)

Note: This bit can not be modified as long as LOCK level 1 has been programmed (LOCK bits in TIMx_BDTR register).

Bit 13 **BKP**: Break polarity

0: Break input BRK is active low
1: Break input BRK is active high

Note: This bit can not be modified as long as LOCK level 1 has been programmed (LOCK bits in TIMx_BDTR register).

Note: Any write operation to this bit takes a delay of 1 APB clock cycle to become effective.

Bit 12 **BKE**: Break enable

0: Break inputs (BRK and CSS clock failure event) disabled
1; Break inputs (BRK and CSS clock failure event) enabled

Note: This bit cannot be modified when LOCK level 1 has been programmed (LOCK bits in TIMx_BDTR register).

Note: Any write operation to this bit takes a delay of 1 APB clock cycle to become effective.

Bit 11 **OSSR**: Off-state selection for Run mode

This bit is used when MOE=1 on channels having a complementary output which are configured as outputs. OSSR is not implemented if no complementary output is implemented in the timer.
See OC/OCN enable description for more details (*Section 17.4.9: TIM1 and TIM8 capture/compare enable register (TIMx_CCER)*).
0: When inactive, OC/OCN outputs are disabled (OC/OCN enable output signal=0).
1: When inactive, OC/OCN outputs are enabled with their inactive level as soon as CCxE=1 or CCxNE=1. Then, OC/OCN enable output signal=1

Note: This bit can not be modified as soon as the LOCK level 2 has been programmed (LOCK bits in TIMx_BDTR register).

Bit 10 **OSSI**: Off-state selection for Idle mode

This bit is used when MOE=0 on channels configured as outputs.
See OC/OCN enable description for more details (*Section 17.4.9: TIM1 and TIM8 capture/compare enable register (TIMx_CCER)*).
0: When inactive, OC/OCN outputs are disabled (OC/OCN enable output signal=0).
1: When inactive, OC/OCN outputs are forced first with their idle level as soon as CCxE=1 or CCxNE=1. OC/OCN enable output signal=1)

Note: This bit can not be modified as soon as the LOCK level 2 has been programmed (LOCK bits in TIMx_BDTR register).

Bits 9:8 **LOCK[1:0]**: Lock configuration

These bits offer a write protection against software errors.
00: LOCK OFF - No bit is write protected.
01: LOCK Level 1 = DTG bits in TIMx_BDTR register, OISx and OISxN bits in TIMx_CR2 register and BKE/BKP/AOE bits in TIMx_BDTR register can no longer be written.
10: LOCK Level 2 = LOCK Level 1 + CC Polarity bits (CCxP/CCxNP bits in TIMx_CCER register, as long as the related channel is configured in output through the CCxS bits) as well as OSSR and OSSI bits can no longer be written.
11: LOCK Level 3 = LOCK Level 2 + CC Control bits (OCxM and OCxPE bits in TIMx_CCMRx registers, as long as the related channel is configured in output through the CCxS bits) can no longer be written.

Note: The LOCK bits can be written only once after the reset. Once the TIMx_BDTR register has been written, their content is frozen until the next reset.

Bits 7:0 **DTG[7:0]**: Dead-time generator setup

This bit-field defines the duration of the dead-time inserted between the complementary outputs. DT correspond to this duration.
DTG[7:5]=0xx => DT=DTG[7:0]x t_{dtg} with t_{dtg}=t_{DTS}.
DTG[7:5]=10x => DT=(64+DTG[5:0])xt_{dtg} with T_{dtg}=2xt_{DTS}.
DTG[7:5]=110 => DT=(32+DTG[4:0])xt_{dtg} with T_{dtg}=8xt_{DTS}.
DTG[7:5]=111 => DT=(32+DTG[4:0])xt_{dtg} with T_{dtg}=16xt_{DTS}.
Example if T_{DTS}=125ns (8MHz), dead-time possible values are:
0 to 15875 ns by 125 ns steps,
16 us to 31750 ns by 250 ns steps,
32 us to 63us by 1 us steps,
64 us to 126 us by 2 us steps

Note: This bit-field can not be modified as long as LOCK level 1, 2 or 3 has been programmed (LOCK bits in TIMx_BDTR register).

17.4.19 TIM1 and TIM8 DMA control register (TIMx_DCR)

Address offset: 0x48

Reset value: 0x0000

15	14	13	12	11	10	9	8	7	6	5	4	3	2	1	0
Reserved			DBL[4:0]					Reserved			DBA[4:0]				
			rw	rw	rw	rw	rw				rw	rw	rw	rw	rw

Bits 15:13 Reserved, must be kept at reset value.

Bits 12:8 **DBL[4:0]**: DMA burst length

This 5-bit vector defines the number of DMA transfers (the timer detects a burst transfer when a read or a write access to the TIMx_DMAR register address is performed).
the TIMx_DMAR address)
00000: 1 transfer
00001: 2 transfers
00010: 3 transfers
...
10001: 18 transfers

Bits 7:5 Reserved, must be kept at reset value.

Bits 4:0 **DBA[4:0]**: DMA base address

This 5-bits vector defines the base-address for DMA transfers (when read/write access are done through the TIMx_DMAR address). DBA is defined as an offset starting from the address of the TIMx_CR1 register.
Example:
00000: TIMx_CR1,
00001: TIMx_CR2,
00010: TIMx_SMCR,
...

Example: Let us consider the following transfer: DBL = 7 transfers and DBA = TIMx_CR1. In this case the transfer is done to/from 7 registers starting from the TIMx_CR1 address.

17.4.20 TIM1 and TIM8 DMA address for full transfer (TIMx_DMAR)

Address offset: 0x4C

Reset value: 0x0000 0000

31	30	29	28	27	26	25	24	23	22	21	20	19	18	17	16
DMAB[31:16]															
rw	rw	rw	rw	rw	rw	rw	rw	rw	rw	rw	rw	rw	rw	rw	rw
15	14	13	12	11	10	9	8	7	6	5	4	3	2	1	0
DMAB[15:0]															
rw	rw	rw	rw	rw	rw	rw	rw	rw	rw	rw	rw	rw	rw	rw	rw

Bits 31:0 **DMAB[31:0]**: DMA register for burst accesses

A read or write operation to the DMAR register accesses the register located at the address

(TIMx_CR1 address) + (DBA + DMA index) x 4

where TIMx_CR1 address is the address of the control register 1, DBA is the DMA base address configured in TIMx_DCR register, DMA index is automatically controlled by the DMA transfer, and ranges from 0 to DBL (DBL configured in TIMx_DCR).

Example of how to use the DMA burst feature

In this example the timer DMA burst feature is used to update the contents of the CCRx registers (x = 2, 3, 4) with the DMA transferring half words into the CCRx registers.

This is done in the following steps:

1. Configure the corresponding DMA channel as follows:
   - DMA channel peripheral address is the DMAR register address
   - DMA channel memory address is the address of the buffer in the RAM containing the data to be transferred by DMA into CCRx registers.
   - Number of data to transfer = 3 (See note below).
   - Circular mode disabled.
2. Configure the DCR register by configuring the DBA and DBL bit fields as follows: DBL = 3 transfers, DBA = 0xE.
3. Enable the TIMx update DMA request (set the UDE bit in the DIER register).
4. Enable TIMx
5. Enable the DMA channel

Note: This example is for the case where every CCRx register to be updated once. If every CCRx register is to be updated twice for example, the number of data to transfer should be 6. Let's take the example of a buffer in the RAM containing data1, data2, data3, data4, data5 and data6. The data is transferred to the CCRx registers as follows: on the first update DMA request, data1 is transferred to CCR2, data2 is transferred to CCR3, data3 is transferred to CCR4 and on the second update DMA request, data4 is transferred to CCR2, data5 is transferred to CCR3 and data6 is transferred to CCR4.

17.4.21 TIM1 and TIM8 register map

TIM1 and TIM8 registers are mapped as 16-bit addressable registers as described in the table below:

Table 96. TIM1 and TIM8 register map and reset values

Offset	Register	31	30	29	28	27	26	25	24	23	22	21	20	19	18	17	16	15	14	13	12	11	10	9	8	7	6	5	4	3	2	1	0
0x00	**TIMx_CR1**	Reserved																						CKD [1:0]		ARPE	CMS [1:0]		DIR	OPM	URS	UDIS	CEN
	Reset value																							0	0	0	0	0	0	0	0	0	0
0x04	**TIMx_CR2**	Reserved																	OIS4	OIS3N	OIS3	OIS2N	OIS2	OIS1N	OIS1	TI1S	MMS[2:0]			CCDS	CCUS	Reserved	CCPC
	Reset value																		0	0	0	0	0	0	0	0	0	0	0	0	0		0
0x08	**TIMx_SMCR**	Reserved																ETP	ECE	ETP S [1:0]		ETF[3:0]				MSM	TS[2:0]			Reserved	SMS[2:0]		
	Reset value																	0	0	0	0	0	0	0	0	0	0	0	0		0	0	0
0x0C	**TIMx_DIER**	Reserved																	TDE	COMDE	CC4DE	CC3DE	CC2DE	CC1DE	UDE	BIE	TIE	COMIE	CC4IE	CC3IE	CC2IE	CC1IE	UIE
	Reset value																		0	0	0	0	0	0	0	0	0	0	0	0	0	0	0
0x10	**TIMx_SR**	Reserved																			CC4OF	CC3OF	CC2OF	CC1OF	Reserved	BIF	TIF	COMIF	CC4IF	CC3IF	CC2IF	CC1IF	UIF
	Reset value																				0	0	0	0		0	0	0	0	0	0	0	0
0x14	**TIMx_EGR**	Reserved																								BG	TG	COMG	CC4G	CC3G	CC2G	CC1G	UG
	Reset value																									0	0	0	0	0	0	0	0
0x18	**TIMx_CCMR1** Output Compare mode	Reserved																OC2CE	OC2M [2:0]			OC2PE	OC2FE	CC2S [1:0]		OC1CE	OC1M [2:0]			OC1PE	OC1FE	CC1S [1:0]	
	Reset value																	0	0	0	0	0	0	0	0	0	0	0	0	0	0	0	0
	TIMx_CCMR1 Input Capture mode	Reserved																IC2F[3:0]				IC2 PSC [1:0]		CC2S [1:0]		IC1F[3:0]				IC1 PSC [1:0]		CC1S [1:0]	
	Reset value																	0	0	0	0	0	0	0	0	0	0	0	0	0	0	0	0
0x1C	**TIMx_CCMR2** Output Compare mode	Reserved																O24CE	OC4M [2:0]			OC4PE	OC4FE	CC4S [1:0]		OC3CE	OC3M [2:0]			OC3PE	OC3FE	CC3S [1:0]	
	Reset value																	0	0	0	0	0	0	0	0	0	0	0	0	0	0	0	0
	TIMx_CCMR2 Input Capture mode	Reserved																IC4F[3:0]				IC4 PSC [1:0]		CC4S [1:0]		IC3F[3:0]				IC3 PSC [1:0]		CC3S [1:0]	
	Reset value																	0	0	0	0	0	0	0	0	0	0	0	0	0	0	0	0
0x20	**TIMx_CCER**	Reserved																		CC4P	CC4E	CC3NP	CC3NE	CC3P	CC3E	CC2NP	CC2NE	CC2P	CC2E	CC1NP	CC1NE	CC1P	CC1E
	Reset value																			0	0	0	0	0	0	0	0	0	0	0	0	0	0
0x24	**TIMx_CNT**	Reserved																CNT[15:0]															
	Reset value																	0	0	0	0	0	0	0	0	0	0	0	0	0	0	0	0
0x28	**TIMx_PSC**	Reserved																PSC[15:0]															
	Reset value																	0	0	0	0	0	0	0	0	0	0	0	0	0	0	0	0

Table 96. TIM1 and TIM8 register map and reset values (continued)

Offset	Register	31	30	29	28	27	26	25	24	23	22	21	20	19	18	17	16	15	14	13	12	11	10	9	8	7	6	5	4	3	2	1	0
0x2C	**TIMx_ARR**	Reserved																ARR[15:0]															
	Reset value																	1	1	1	1	1	1	1	1	1	1	1	1	1	1	1	1
0x30	**TIMx_RCR**	Reserved																								REP[7:0]							
	Reset value																									0	0	0	0	0	0	0	0
0x34	**TIMx_CCR1**	Reserved																CCR1[15:0]															
	Reset value																	0	0	0	0	0	0	0	0	0	0	0	0	0	0	0	0
0x38	**TIMx_CCR2**	Reserved																CCR2[15:0]															
	Reset value																	0	0	0	0	0	0	0	0	0	0	0	0	0	0	0	0
0x3C	**TIMx_CCR3**	Reserved																CCR3[15:0]															
	Reset value																	0	0	0	0	0	0	0	0	0	0	0	0	0	0	0	0
0x40	**TIMx_CCR4**	Reserved																CCR4[15:0]															
	Reset value																	0	0	0	0	0	0	0	0	0	0	0	0	0	0	0	0
0x44	**TIMx_BDTR**	Reserved																MOE	AOE	BKP	BKE	OSSR	OSSI	LOCK [1:0]		DT[7:0]							
	Reset value																	0	0	0	0	0	0	0	0	0	0	0	0	0	0	0	0
0x48	**TIMx_DCR**	Reserved																			DBL[4:0]					Reserved			DBA[4:0]				
	Reset value																				0	0	0	0	0				0	0	0	0	0
0x4C	**TIMx_DMAR**	DMAB[31:0]																															
	Reset value	0	0	0	0	0	0	0	0	0	0	0	0	0	0	0	0	0	0	0	0	0	0	0	0	0	0	0	0	0	0	0	0

Refer to *Section 2.3: Memory map* for the register boundary addresses.

18 General-purpose timers (TIM2 to TIM5)

This section applies to the whole STM32F4xx family, unless otherwise specified.

18.1 TIM2 to TIM5 introduction

The general-purpose timers consist of a 16-bit or 32-bit auto-reload counter driven by a programmable prescaler.

They may be used for a variety of purposes, including measuring the pulse lengths of input signals (*input capture*) or generating output waveforms (*output compare and PWM*).

Pulse lengths and waveform periods can be modulated from a few microseconds to several milliseconds using the timer prescaler and the RCC clock controller prescalers.

The timers are completely independent, and do not share any resources. They can be synchronized together as described in *Section 18.3.15*.

18.2 TIM2 to TIM5 main features

General-purpose TIMx timer features include:

- 16-bit (TIM3 and TIM4) or 32-bit (TIM2 and TIM5) up, down, up/down auto-reload counter.
- 16-bit programmable prescaler used to divide (also “on the fly”) the counter clock frequency by any factor between 1 and 65536.
- Up to 4 independent channels for:
  - Input capture
  - Output compare
  - PWM generation (Edge- and Center-aligned modes)
  - One-pulse mode output
- Synchronization circuit to control the timer with external signals and to interconnect several timers.
- Interrupt/DMA generation on the following events:
  - Update: counter overflow/underflow, counter initialization (by software or internal/external trigger)
  - Trigger event (counter start, stop, initialization or count by internal/external trigger)
  - Input capture
  - Output compare
- Supports incremental (quadrature) encoder and hall-sensor circuitry for positioning purposes
- Trigger input for external clock or cycle-by-cycle current management

Figure 134. General-purpose timer block diagram

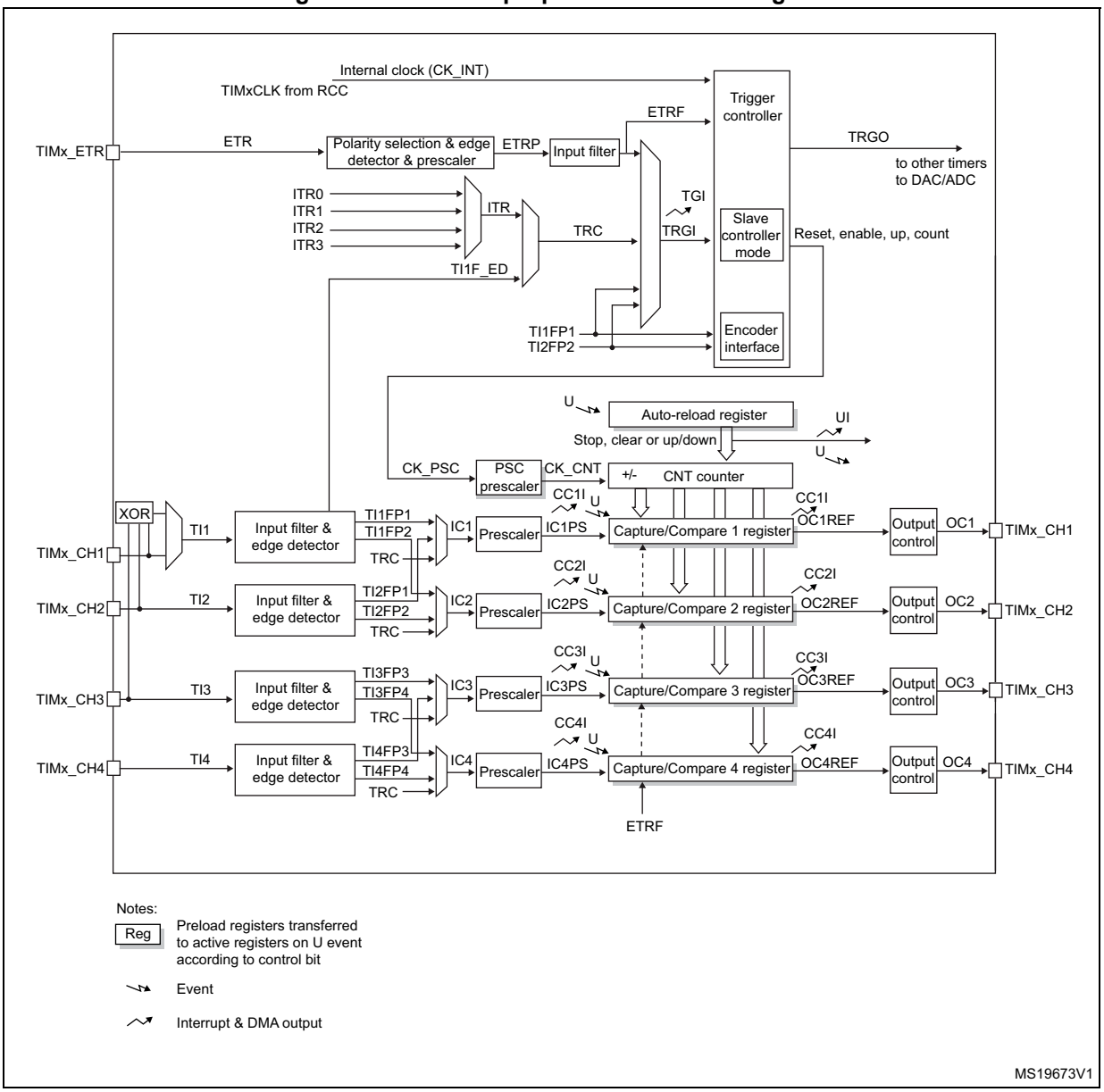

18.3 TIM2 to TIM5 functional description

18.3.1 Time-base unit

The main block of the programmable timer is a 16-bit/32-bit counter with its related auto-reload register. The counter can count up. The counter clock can be divided by a prescaler.

The counter, the auto-reload register and the prescaler register can be written or read by software. This is true even when the counter is running.

The time-base unit includes:

- Counter Register (TIMx_CNT)
- Prescaler Register (TIMx_PSC):
- Auto-Reload Register (TIMx_ARR)

The auto-reload register is preloaded. Writing to or reading from the auto-reload register accesses the preload register. The content of the preload register are transferred into the shadow register permanently or at each update event (UEV), depending on the auto-reload preload enable bit (ARPE) in TIMx_CR1 register. The update event is sent when the counter reaches the overflow (or underflow when downcounting) and if the UDIS bit equals 0 in the TIMx_CR1 register. It can also be generated by software. The generation of the update event is described in detail for each configuration.

The counter is clocked by the prescaler output CK_CNT, which is enabled only when the counter enable bit (CEN) in TIMx_CR1 register is set (refer also to the slave mode controller description to get more details on counter enabling).

Note that the actual counter enable signal CNT_EN is set 1 clock cycle after CEN.

Prescaler description

The prescaler can divide the counter clock frequency by any factor between 1 and 65536. It is based on a 16-bit counter controlled through a 16-bit/32-bit register (in the TIMx_PSC register). It can be changed on the fly as this control register is buffered. The new prescaler ratio is taken into account at the next update event.

Figure 135 and *Figure 136* give some examples of the counter behavior when the prescaler ratio is changed on the fly:

Figure 135. Counter timing diagram with prescaler division change from 1 to 2

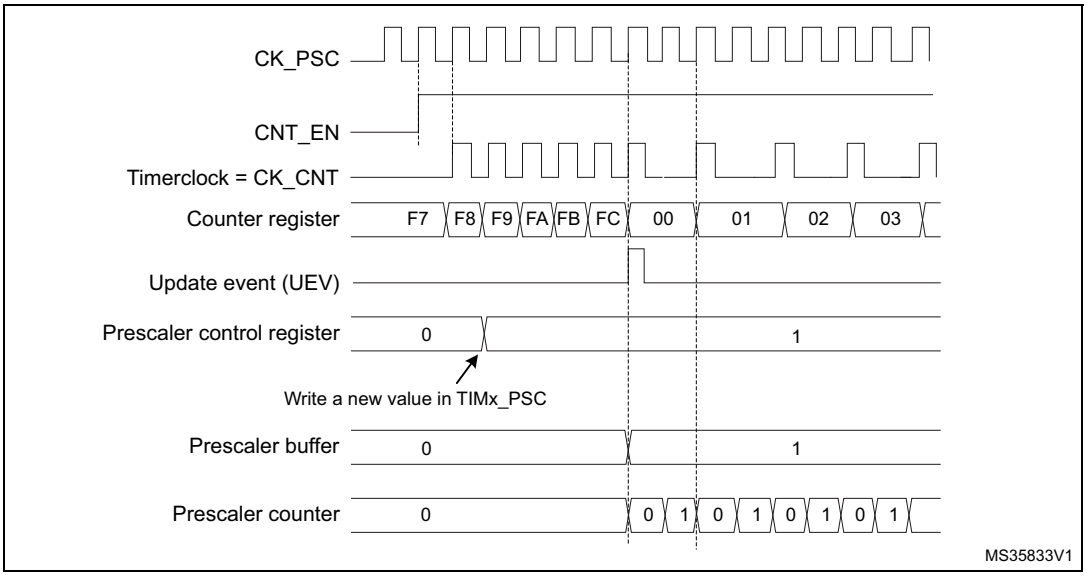

Figure 136. Counter timing diagram with prescaler division change from 1 to 4

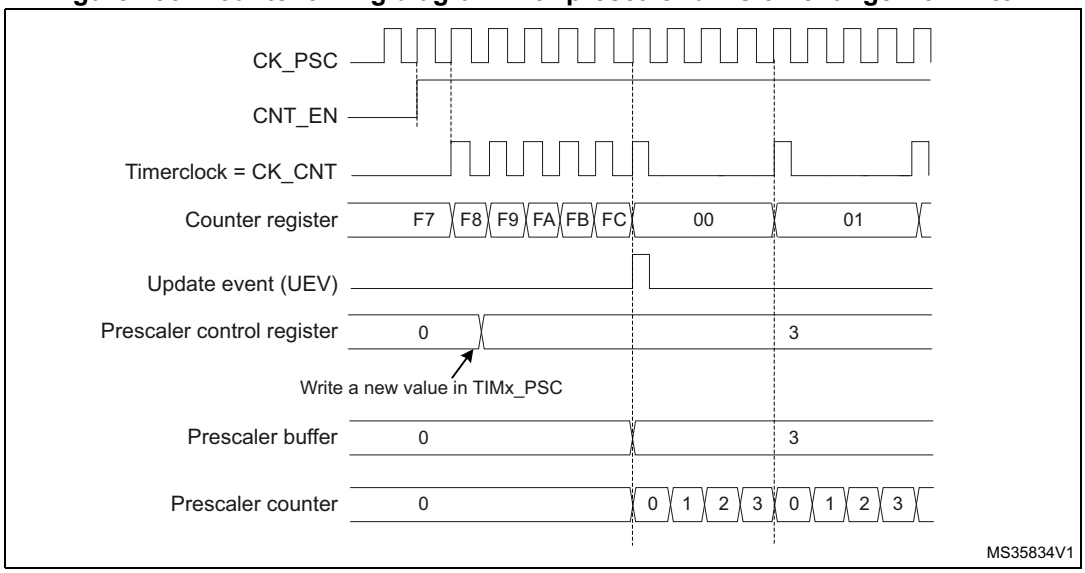

18.3.2 Counter modes

Upcounting mode

In upcounting mode, the counter counts from 0 to the auto-reload value (content of the TIMx_ARR register), then restarts from 0 and generates a counter overflow event.

An Update event can be generated at each counter overflow or by setting the UG bit in the TIMx_EGR register (by software or by using the slave mode controller).

The UEV event can be disabled by software by setting the UDIS bit in TIMx_CR1 register. This is to avoid updating the shadow registers while writing new values in the preload registers. Then no update event occurs until the UDIS bit has been written to 0. However, the counter restarts from 0, as well as the counter of the prescaler (but the prescale rate

does not change). In addition, if the URS bit (update request selection) in TIMx_CR1 register is set, setting the UG bit generates an update event UEV but without setting the UIF flag (thus no interrupt or DMA request is sent). This is to avoid generating both update and capture interrupts when clearing the counter on the capture event.

When an update event occurs, all the registers are updated and the update flag (UIF bit in TIMx_SR register) is set (depending on the URS bit):

- The buffer of the prescaler is reloaded with the preload value (content of the TIMx_PSC register)
- The auto-reload shadow register is updated with the preload value (TIMx_ARR)

The following figures show some examples of the counter behavior for different clock frequencies when TIMx_ARR=0x36.

Figure 137. Counter timing diagram, internal clock divided by 1

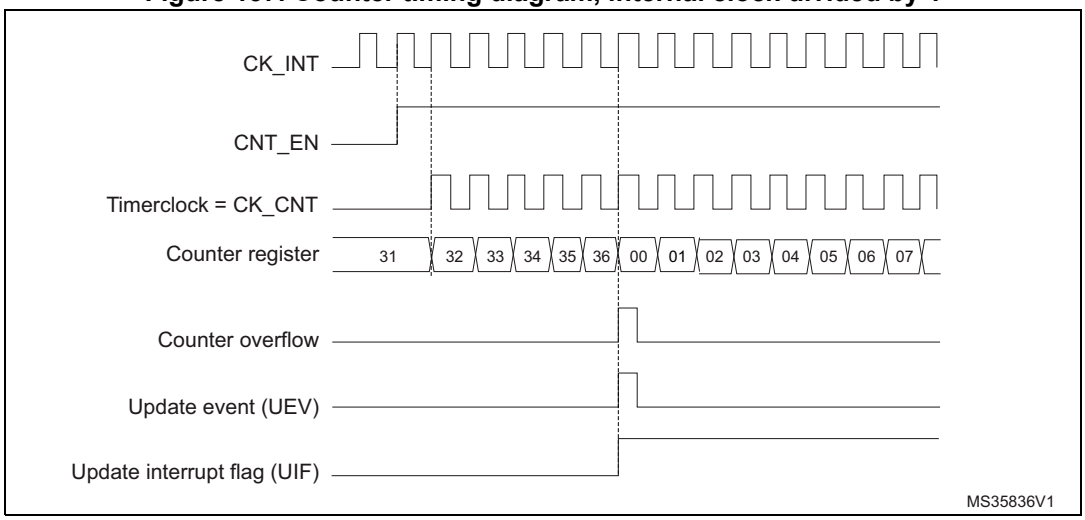

Figure 138. Counter timing diagram, internal clock divided by 2

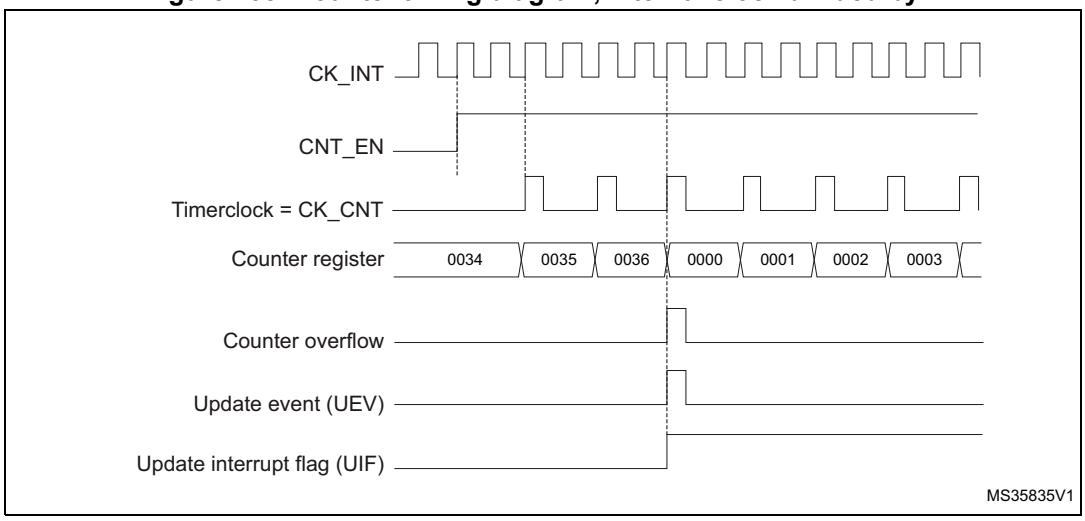

Figure 139. Counter timing diagram, internal clock divided by 4

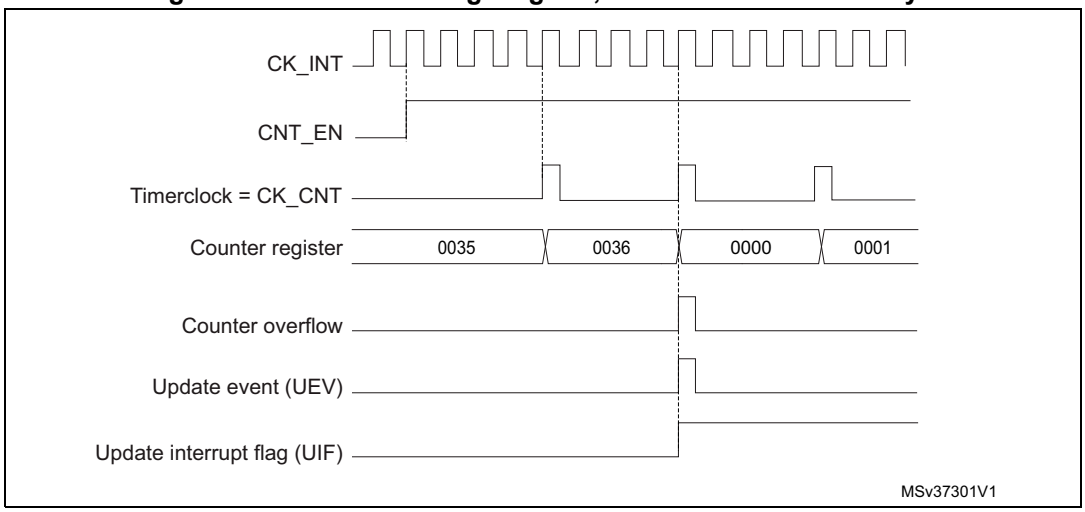

Figure 140. Counter timing diagram, internal clock divided by N

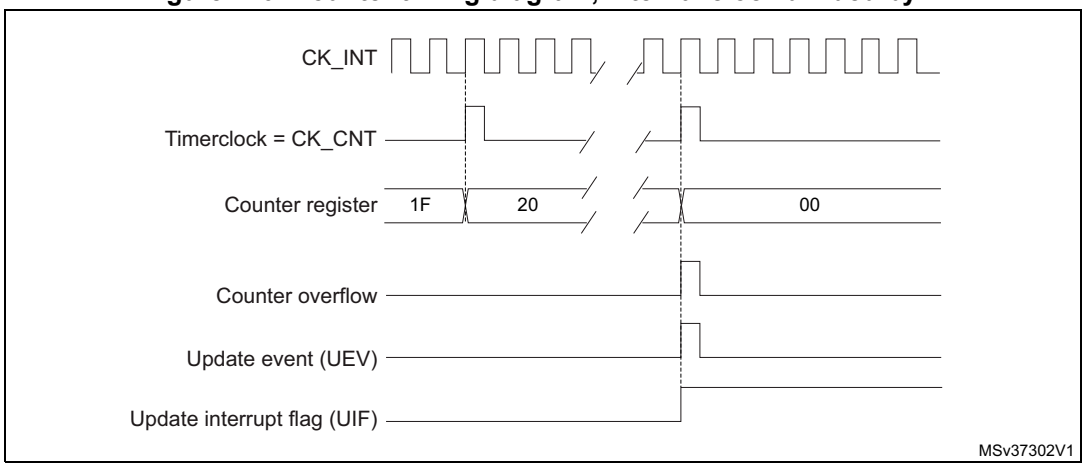

Figure 141. Counter timing diagram, Update event when ARPE=0 (TIMx_ARR not preloaded)

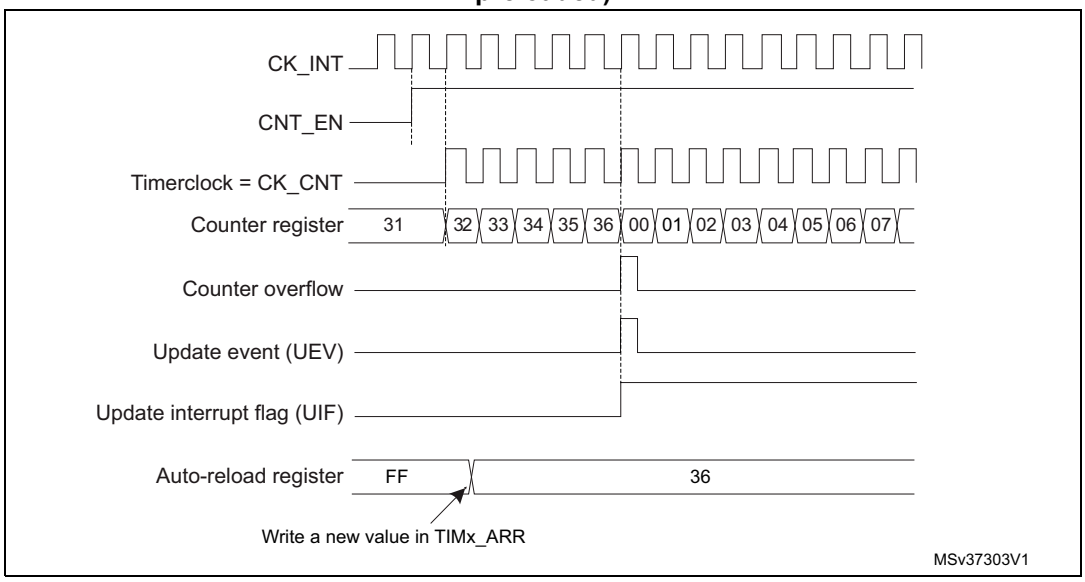

Figure 142. Counter timing diagram, Update event when ARPE=1 (TIMx_ARR preloaded)

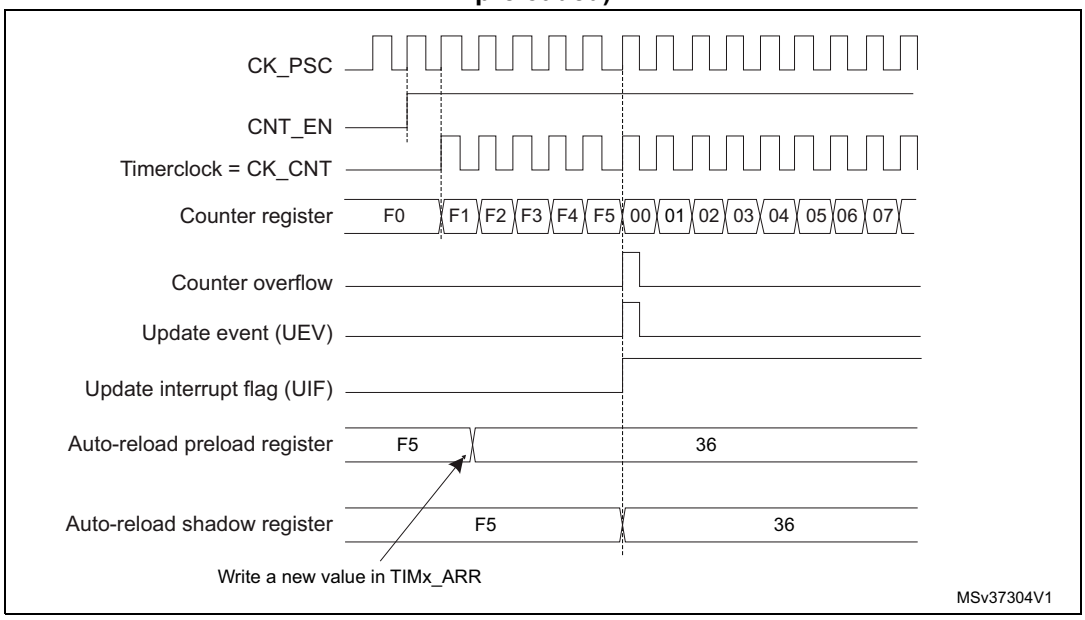

Downcounting mode

In downcounting mode, the counter counts from the auto-reload value (content of the TIMx_ARR register) down to 0, then restarts from the auto-reload value and generates a counter underflow event.

An Update event can be generate at each counter underflow or by setting the UG bit in the TIMx_EGR register (by software or by using the slave mode controller)

The UEV update event can be disabled by software by setting the UDIS bit in TIMx_CR1 register. This is to avoid updating the shadow registers while writing new values in the

preload registers. Then no update event occurs until UDIS bit has been written to 0. However, the counter restarts from the current auto-reload value, whereas the counter of the prescaler restarts from 0 (but the prescale rate doesn't change).

In addition, if the URS bit (update request selection) in TIMx_CR1 register is set, setting the UG bit generates an update event UEV but without setting the UIF flag (thus no interrupt or DMA request is sent). This is to avoid generating both update and capture interrupts when clearing the counter on the capture event.

When an update event occurs, all the registers are updated and the update flag (UIF bit in TIMx_SR register) is set (depending on the URS bit):

- The buffer of the prescaler is reloaded with the preload value (content of the TIMx_PSC register).
- The auto-reload active register is updated with the preload value (content of the TIMx_ARR register). Note that the auto-reload is updated before the counter is reloaded, so that the next period is the expected one.

The following figures show some examples of the counter behavior for different clock frequencies when TIMx_ARR=0x36.

Figure 143. Counter timing diagram, internal clock divided by 1

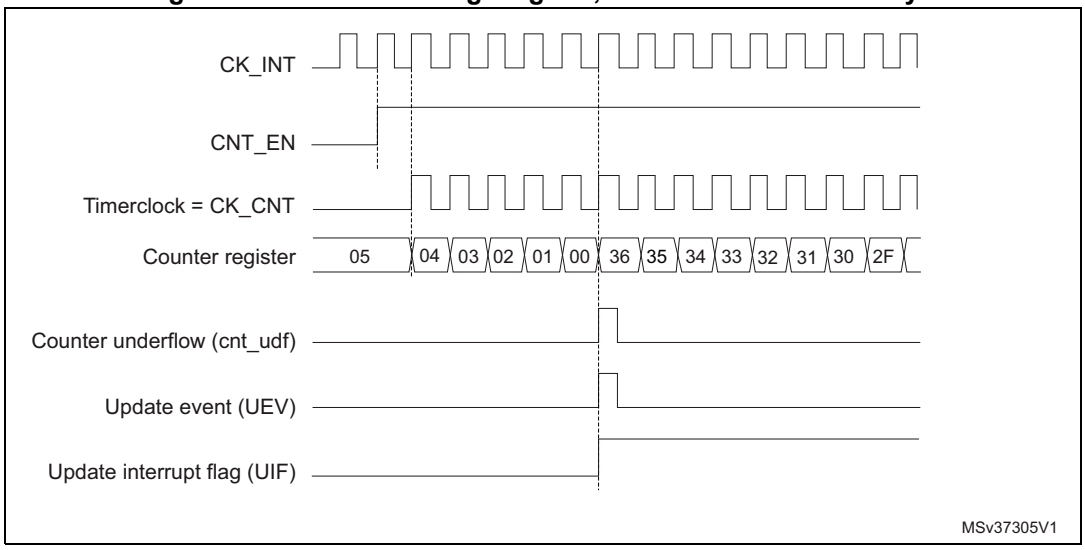

Figure 144. Counter timing diagram, internal clock divided by 2

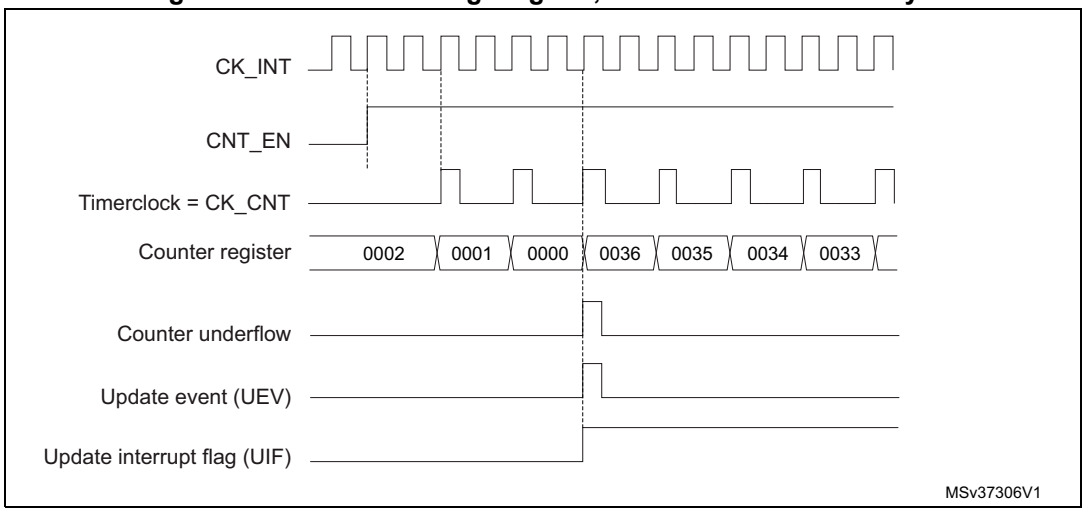

Figure 145. Counter timing diagram, internal clock divided by 4

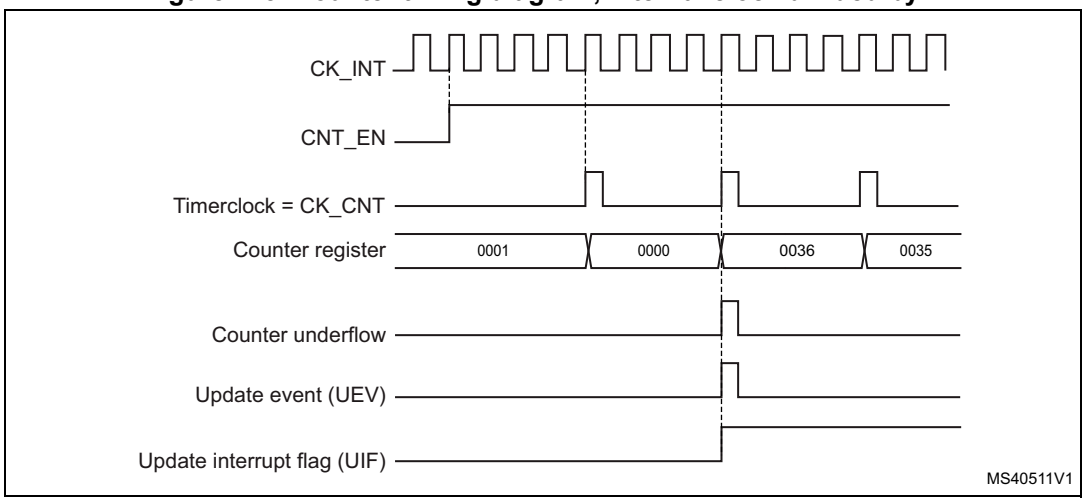

Figure 146. Counter timing diagram, internal clock divided by N

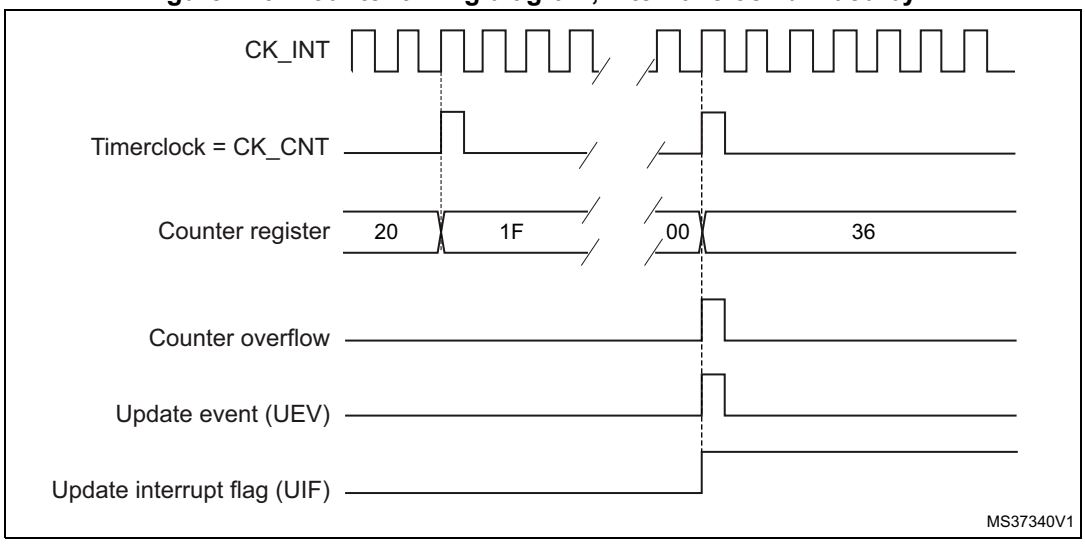

Figure 147. Counter timing diagram, Update event

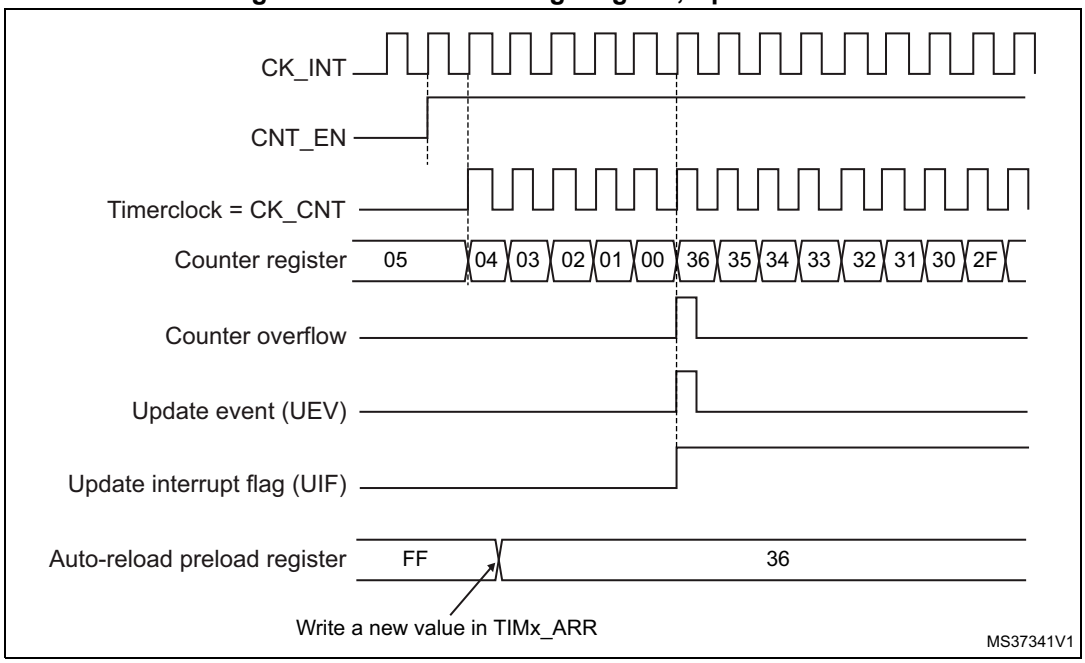

Center-aligned mode (up/down counting)

In center-aligned mode, the counter counts from 0 to the auto-reload value (content of the TIMx_ARR register) – 1, generates a counter overflow event, then counts from the auto-reload value down to 1 and generates a counter underflow event. Then it restarts counting from 0.

Center-aligned mode is active when the CMS bits in TIMx_CR1 register are not equal to '00'. The Output compare interrupt flag of channels configured in output is set when: the counter counts down (Center aligned mode 1, CMS = "01"), the counter counts up (Center aligned mode 2, CMS = "10") the counter counts up and down (Center aligned mode 3, CMS = "11").

In this mode, the direction bit (DIR from TIMx_CR1 register) cannot be written. It is updated by hardware and gives the current direction of the counter.

The update event can be generated at each counter overflow and at each counter underflow or by setting the UG bit in the TIMx_EGR register (by software or by using the slave mode controller) also generates an update event. In this case, the counter restarts counting from 0, as well as the counter of the prescaler.

The UEV update event can be disabled by software by setting the UDIS bit in TIMx_CR1 register. This is to avoid updating the shadow registers while writing new values in the preload registers. Then no update event occurs until the UDIS bit has been written to 0. However, the counter continues counting up and down, based on the current auto-reload value.

In addition, if the URS bit (update request selection) in TIMx_CR1 register is set, setting the UG bit generates an update event UEV but without setting the UIF flag (thus no interrupt or DMA request is sent). This is to avoid generating both update and capture interrupt when clearing the counter on the capture event.

When an update event occurs, all the registers are updated and the update flag (UIF bit in TIMx_SR register) is set (depending on the URS bit):

- The buffer of the prescaler is reloaded with the preload value (content of the TIMx_PSC register).
- The auto-reload active register is updated with the preload value (content of the TIMx_ARR register). Note that if the update source is a counter overflow, the auto-reload is updated before the counter is reloaded, so that the next period is the expected one (the counter is loaded with the new value).

The following figures show some examples of the counter behavior for different clock frequencies.

Figure 148. Counter timing diagram, internal clock divided by 1, TIMx_ARR=0x6

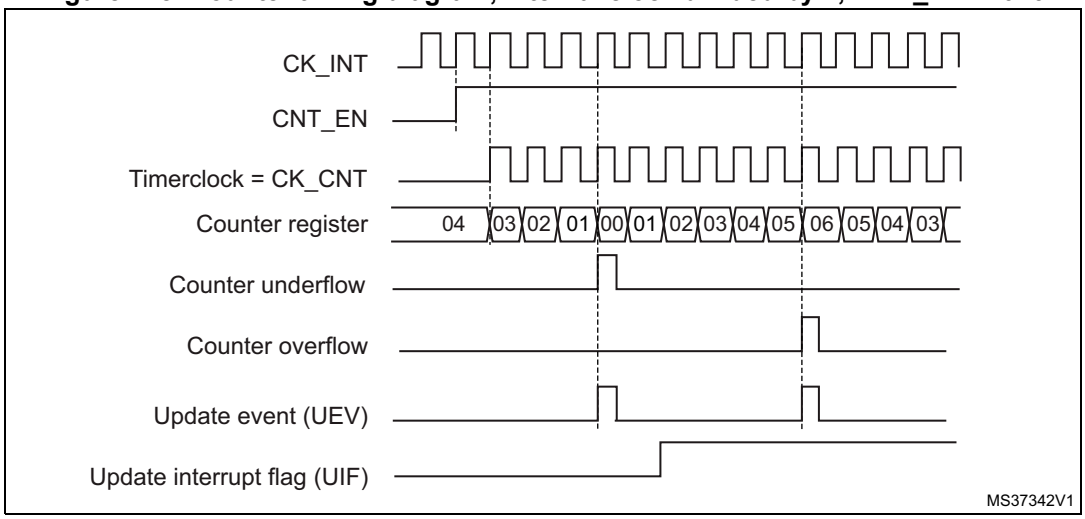

1. Here, center-aligned mode 1 is used, for more details refer to *Section 18.4.1: TIMx control register 1 (TIMx_CR1)*.

Figure 149. Counter timing diagram, internal clock divided by 2

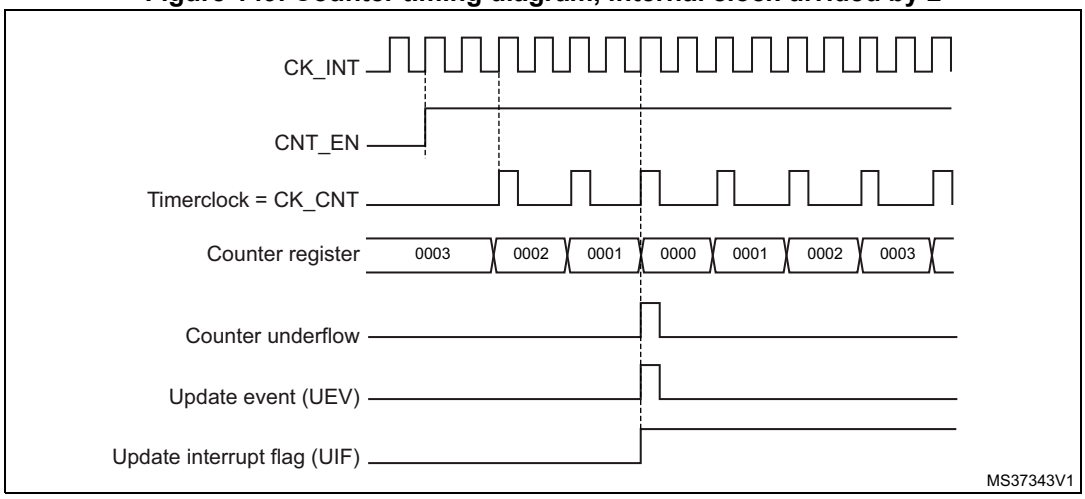

Figure 150. Counter timing diagram, internal clock divided by 4, TIMx_ARR=0x36

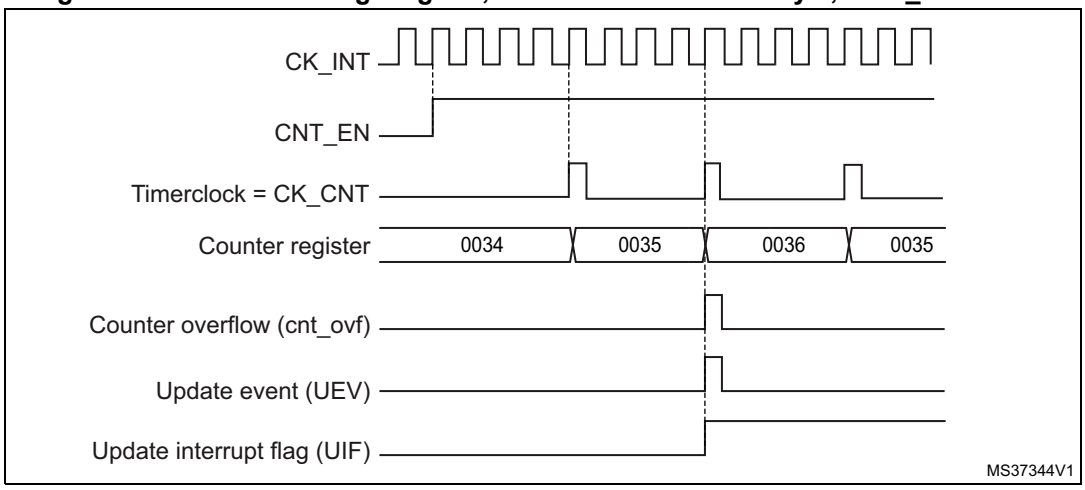

1. Center-aligned mode 2 or 3 is used with an UIF on overflow.

Figure 151. Counter timing diagram, internal clock divided by N

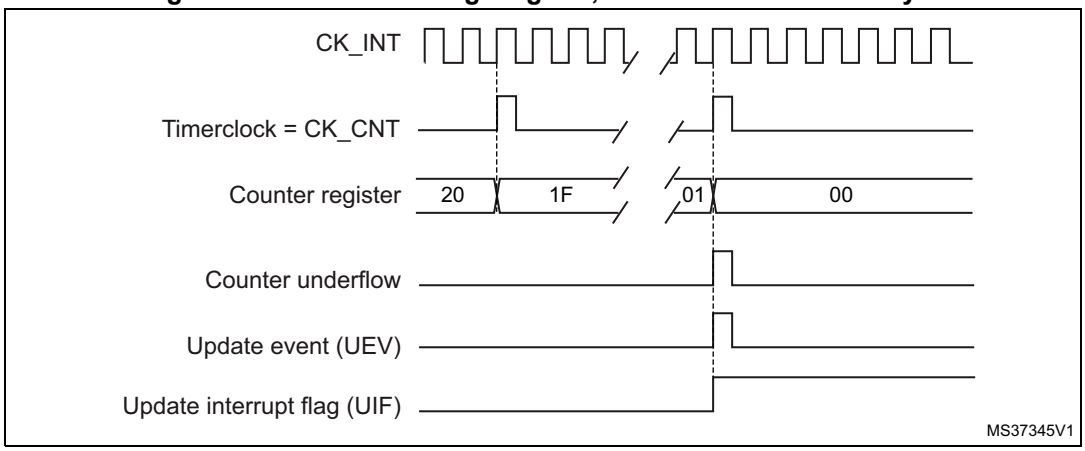

Figure 152. Counter timing diagram, Update event with ARPE=1 (counter underflow)

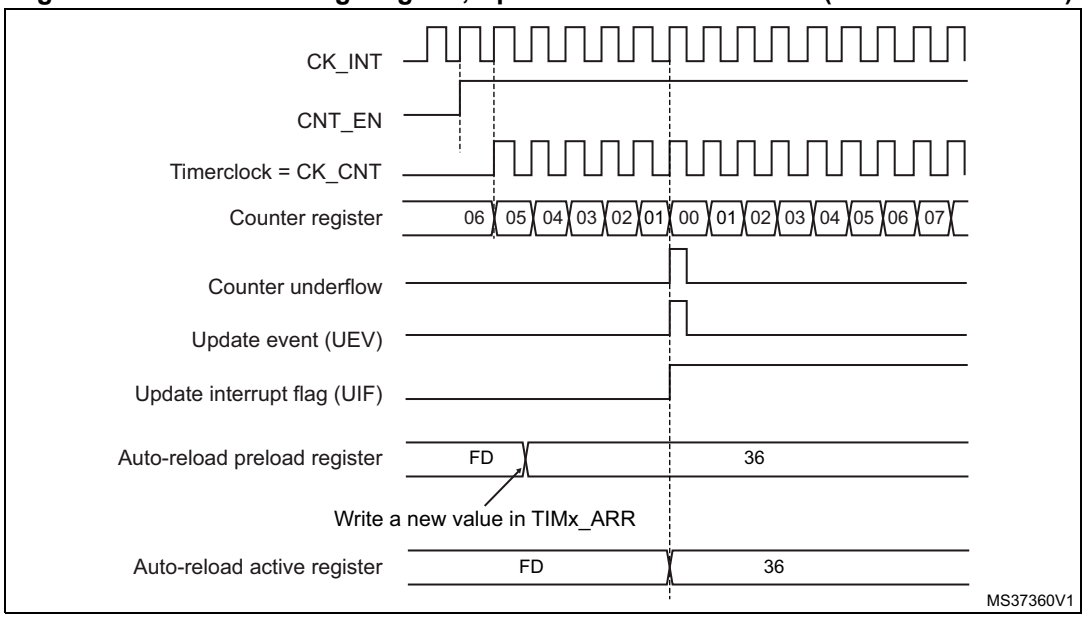

Figure 153. Counter timing diagram, Update event with ARPE=1 (counter overflow)

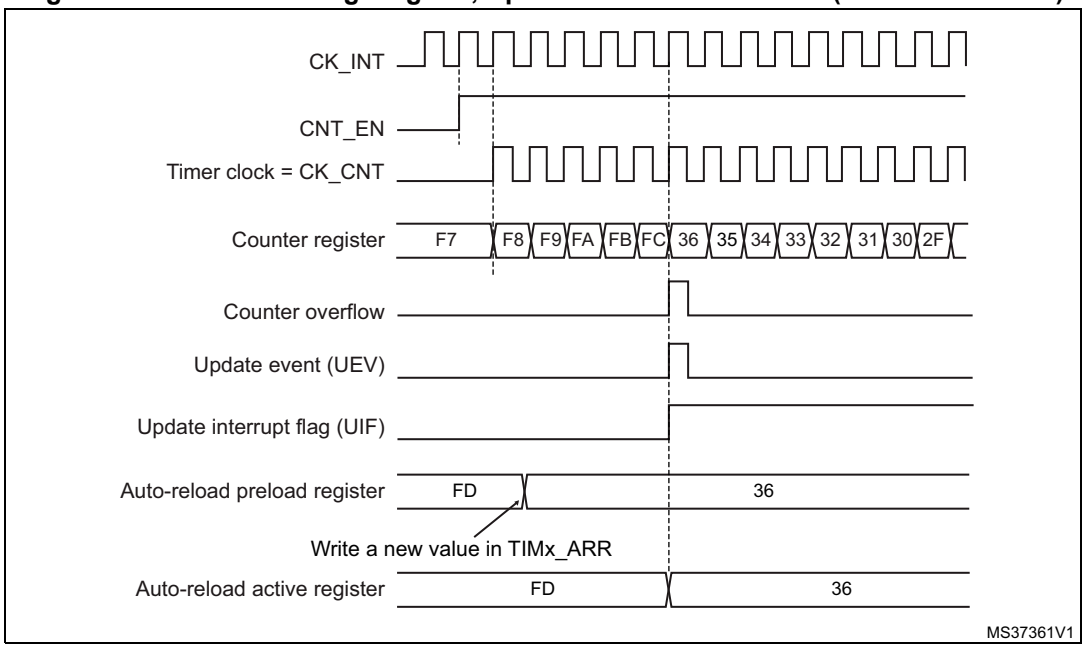

18.3.3 Clock selection

The counter clock can be provided by the following clock sources:

- Internal clock (CK_INT)
- External clock mode1: external input pin (TIx)
- External clock mode2: external trigger input (ETR) available on TIM2, TIM3 and TIM4 only.
- Internal trigger inputs (ITRx): using one timer as prescaler for another timer, for example, Timer3 can be configured to act as a prescaler for Timer 2. Refer to *Using one timer as prescaler for another timer* for more details.

Internal clock source (CK_INT)

If the slave mode controller is disabled (SMS=000 in the TIMx_SMCR register), then the CEN, DIR (in the TIMx_CR1 register) and UG bits (in the TIMx_EGR register) are actual control bits and can be changed only by software (except UG which remains cleared automatically). As soon as the CEN bit is written to 1, the prescaler is clocked by the internal clock CK_INT.

Figure 154 shows the behavior of the control circuit and the upcounter in normal mode, without prescaler.

Figure 154. Control circuit in normal mode, internal clock divided by 1

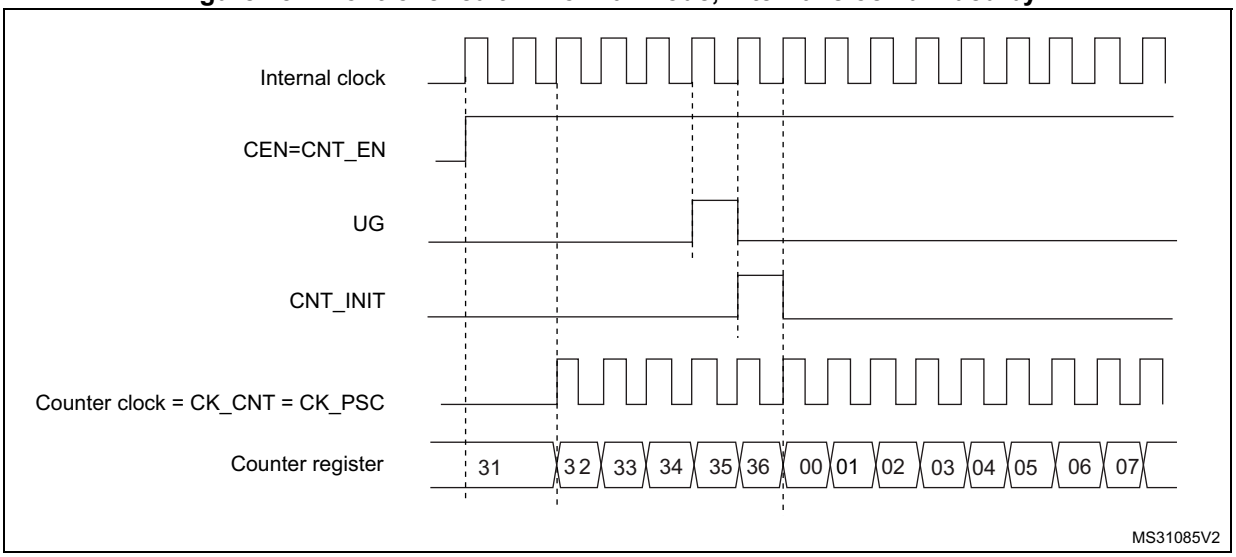

External clock source mode 1

This mode is selected when SMS=111 in the TIMx_SMCR register. The counter can count at each rising or falling edge on a selected input.

Figure 155. TI2 external clock connection example

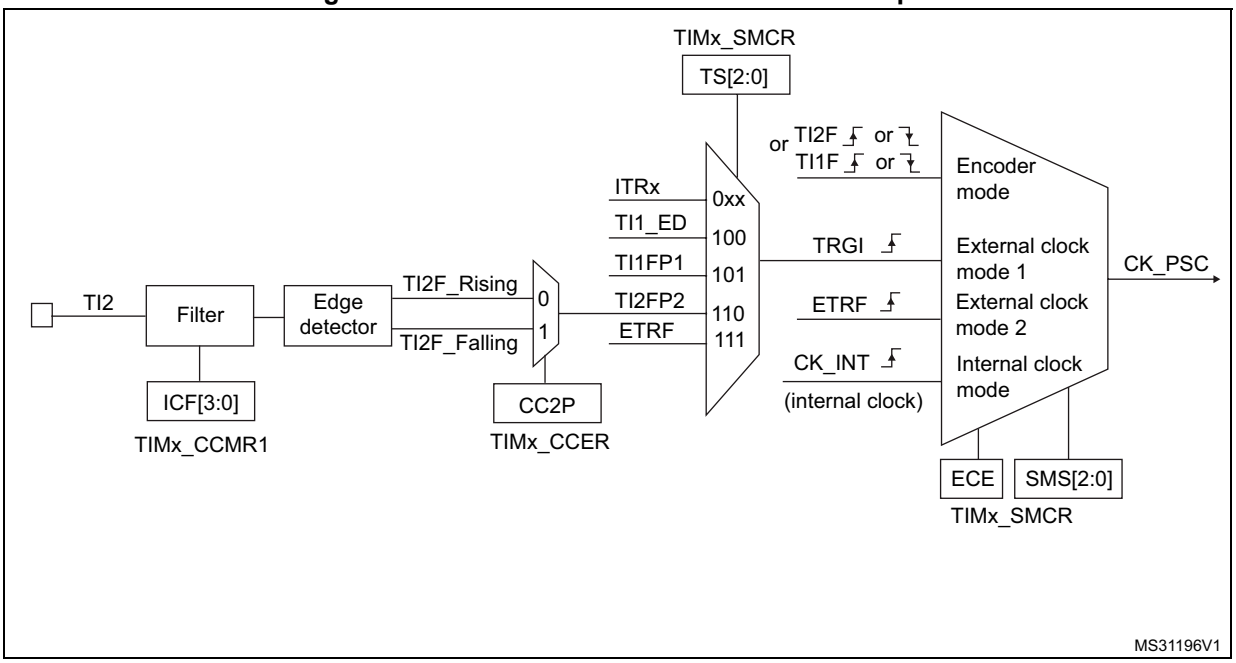

For example, to configure the upcounter to count in response to a rising edge on the TI2 input, use the following procedure:

1. Configure channel 2 to detect rising edges on the TI2 input by writing CC2S= ‘01 in the TIMx_CCMR1 register.
2. Configure the input filter duration by writing the IC2F[3:0] bits in the TIMx_CCMR1 register (if no filter is needed, keep IC2F=0000).

Note: The capture prescaler is not used for triggering, so there’s no need to configure it.

3. Select rising edge polarity by writing CC2P=0 and CC2NP=0 in the TIMx_CCER register.
4. Configure the timer in external clock mode 1 by writing SMS=111 in the TIMx_SMCR register.
5. Select TI2 as the input source by writing TS=110 in the TIMx_SMCR register.
6. Enable the counter by writing CEN=1 in the TIMx_CR1 register.

When a rising edge occurs on TI2, the counter counts once and the TIF flag is set.

The delay between the rising edge on TI2 and the actual clock of the counter is due to the resynchronization circuit on TI2 input.

Figure 156. Control circuit in external clock mode 1

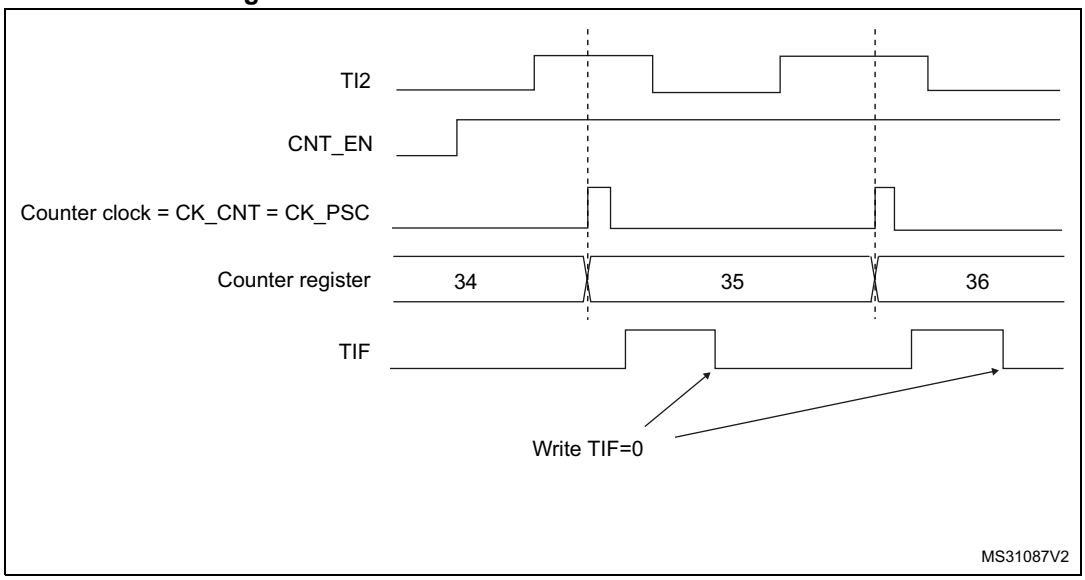

External clock source mode 2

This mode is selected by writing ECE=1 in the TIMx_SMCR register.

The counter can count at each rising or falling edge on the external trigger input ETR.

Figure 157 gives an overview of the external trigger input block.

Figure 157. External trigger input block

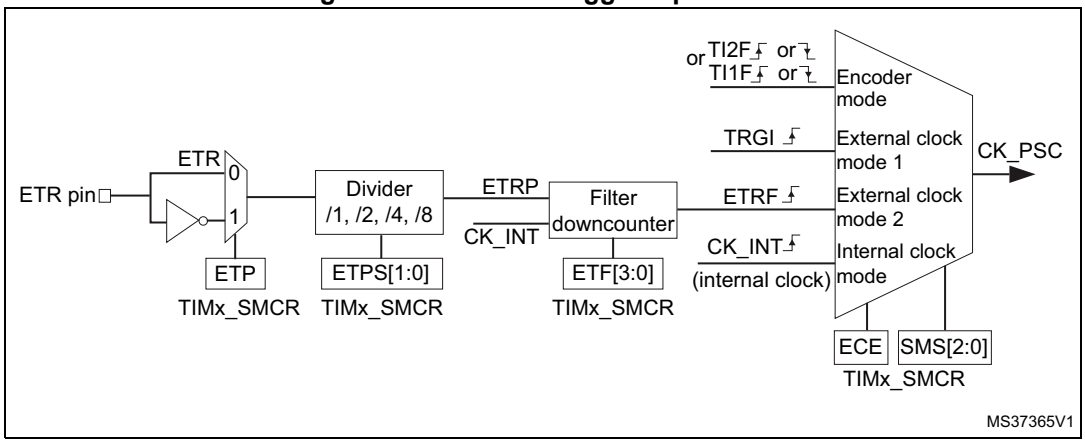

For example, to configure the upcounter to count each 2 rising edges on ETR, use the following procedure:

1. As no filter is needed in this example, write ETF[3:0]=0000 in the TIMx_SMCR register.
2. Set the prescaler by writing ETPS[1:0]=01 in the TIMx_SMCR register
3. Select rising edge detection on the ETR pin by writing ETP=0 in the TIMx_SMCR register
4. Enable external clock mode 2 by writing ECE=1 in the TIMx_SMCR register.
5. Enable the counter by writing CEN=1 in the TIMx_CR1 register.

The counter counts once each 2 ETR rising edges.

The delay between the rising edge on ETR and the actual clock of the counter is due to the resynchronization circuit on the ETRP signal.

Figure 158. Control circuit in external clock mode 2

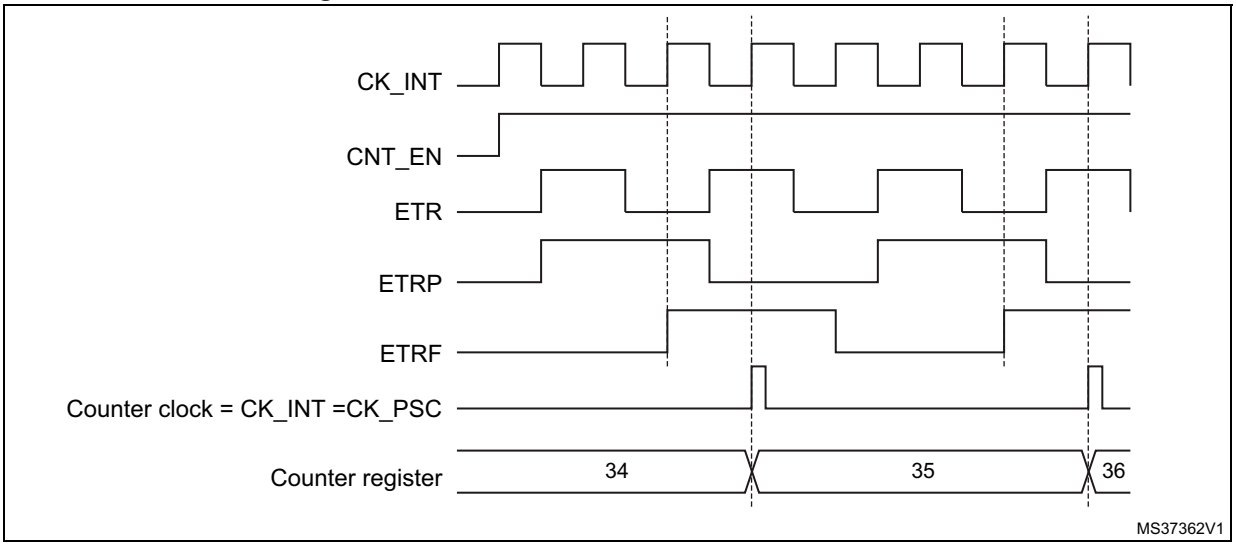

18.3.4 Capture/compare channels

Each Capture/Compare channel (see *Figure 159*) is built around a capture/compare register (including a shadow register), an input stage for capture (with digital filter, multiplexing and prescaler) and an output stage (with comparator and output control).

The input stage samples the corresponding TIx input to generate a filtered signal TIxF. Then, an edge detector with polarity selection generates a signal (TIxFPx) which can be used as trigger input by the slave mode controller or as the capture command. It is prescaled before the capture register (ICxPS).

Figure 159. Capture/compare channel (example: channel 1 input stage)

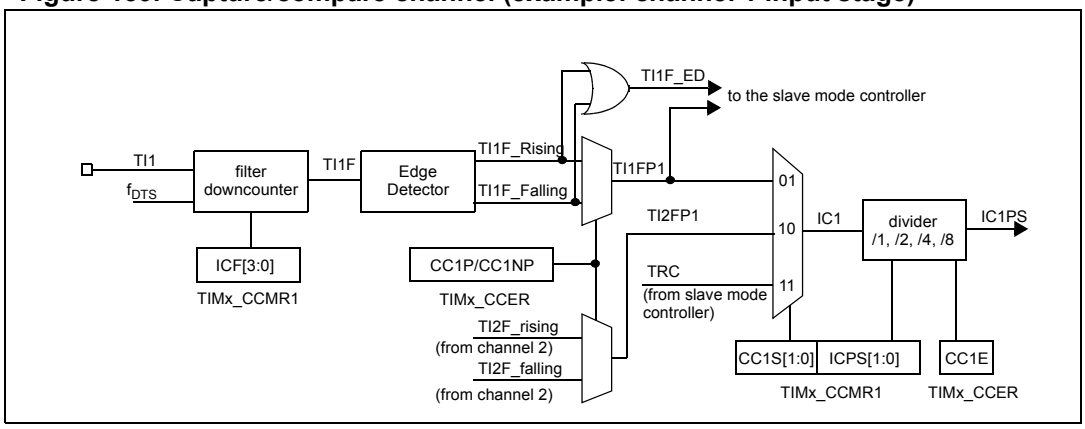

The output stage generates an intermediate waveform which is then used for reference: OCxRef (active high). The polarity acts at the end of the chain.

Figure 160. Capture/compare channel 1 main circuit

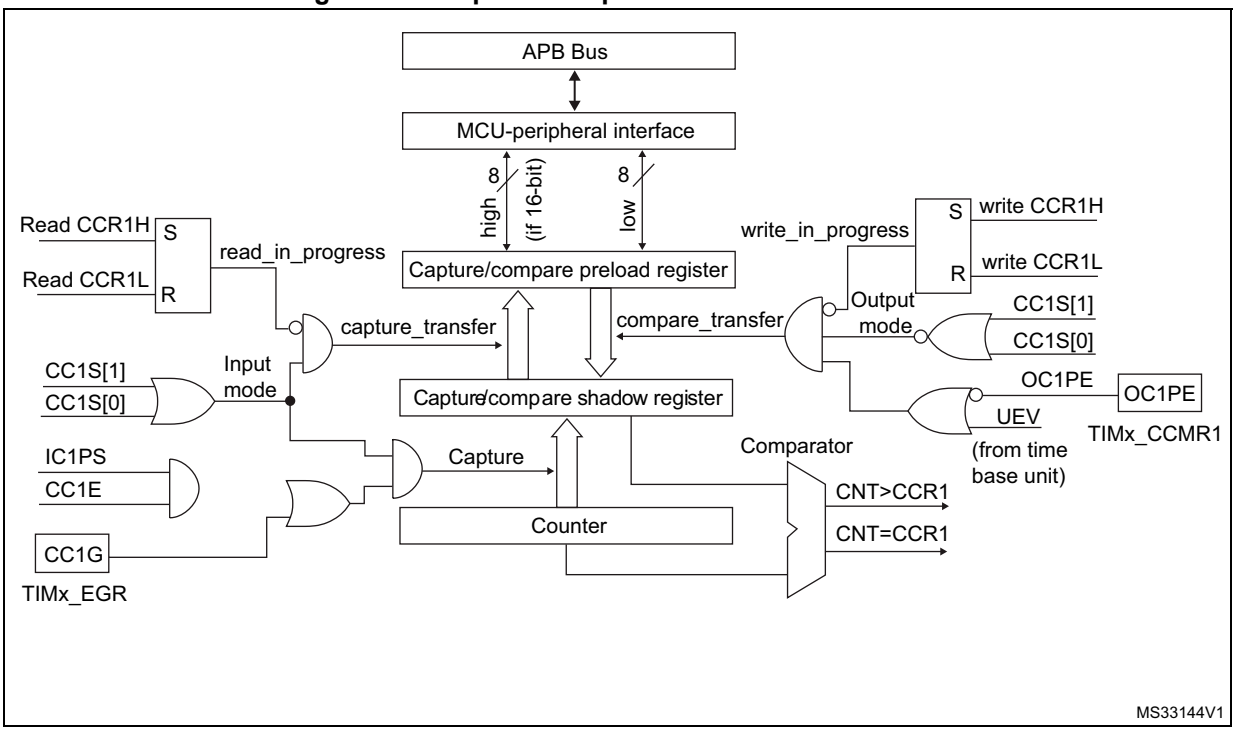

Figure 161. Output stage of capture/compare channel (channel 1)

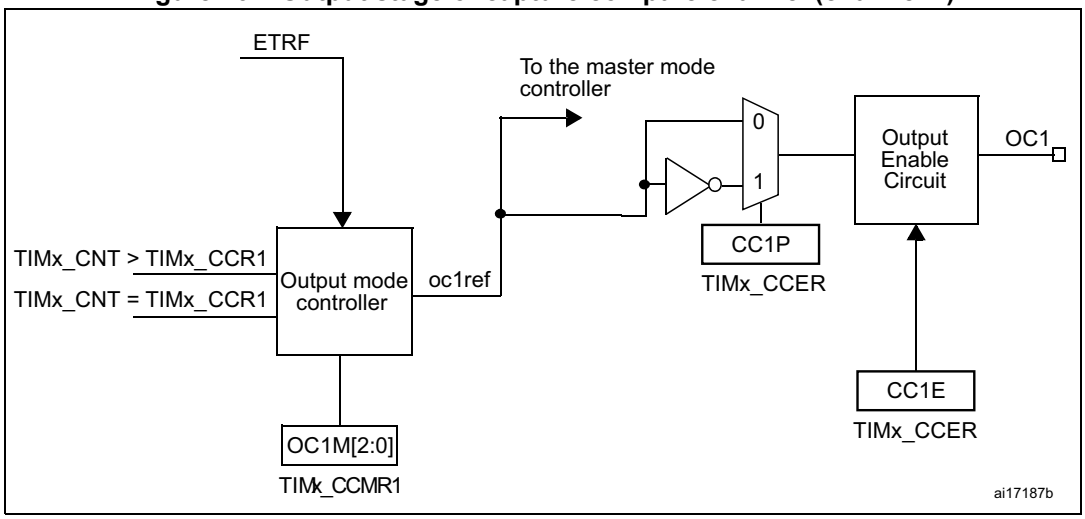

The capture/compare block is made of one preload register and one shadow register. Write and read always access the preload register.

In capture mode, captures are actually done in the shadow register, which is copied into the preload register.

In compare mode, the content of the preload register is copied into the shadow register which is compared to the counter.

18.3.5 Input capture mode

In Input capture mode, the Capture/Compare Registers (TIMx_CCRx) are used to latch the value of the counter after a transition detected by the corresponding ICx signal. When a capture occurs, the corresponding CCXIF flag (TIMx_SR register) is set and an interrupt or a DMA request can be sent if they are enabled. If a capture occurs while the CCxIF flag was already high, then the over-capture flag CCxOF (TIMx_SR register) is set. CCxIF can be cleared by software by writing it to 0 or by reading the captured data stored in the TIMx_CCRx register. CCxOF is cleared when written to 0.

The following example shows how to capture the counter value in TIMx_CCR1 when TI1 input rises. To do this, use the following procedure:

- Select the active input: TIMx_CCR1 must be linked to the TI1 input, so write the CC1S bits to 01 in the TIMx_CCMR1 register. As soon as CC1S becomes different from 00, the channel is configured in input and the TIMx_CCR1 register becomes read-only.
- Program the needed input filter duration with respect to the signal connected to the timer (by programming the ICxF bits in the TIMx_CCMRx register if the input is one of the TIx inputs). Let's imagine that, when toggling, the input signal is not stable during at must five internal clock cycles. We must program a filter duration longer than these five clock cycles. We can validate a transition on TI1 when eight consecutive samples with the new level have been detected (sampled at f_{DTS} frequency). Then write IC1F bits to 0011 in the TIMx_CCMR1 register.
- Select the edge of the active transition on the TI1 channel by writing the CC1P and CC1NP bits to 00 in the TIMx_CCER register (rising edge in this case).
- Program the input prescaler. In our example, we wish the capture to be performed at each valid transition, so the prescaler is disabled (write IC1PS bits to 00 in the TIMx_CCMR1 register).
- Enable capture from the counter into the capture register by setting the CC1E bit in the TIMx_CCER register.
- If needed, enable the related interrupt request by setting the CC1IE bit in the TIMx_DIER register, and/or the DMA request by setting the CC1DE bit in the TIMx_DIER register.

When an input capture occurs:

- The TIMx_CCR1 register gets the value of the counter on the active transition.
- CC1IF flag is set (interrupt flag). CC1OF is also set if at least two consecutive captures occurred whereas the flag was not cleared.
- An interrupt is generated depending on the CC1IE bit.
- A DMA request is generated depending on the CC1DE bit.

In order to handle the overcapture, it is recommended to read the data before the overcapture flag. This is to avoid missing an overcapture which could happen after reading the flag and before reading the data.

Note: IC interrupt and/or DMA requests can be generated by software by setting the corresponding CCxG bit in the TIMx_EGR register.

18.3.6 PWM input mode

This mode is a particular case of input capture mode. The procedure is the same except:

- Two ICx signals are mapped on the same TIx input.
- These 2 ICx signals are active on edges with opposite polarity.
- One of the two TIxFP signals is selected as trigger input and the slave mode controller is configured in reset mode.

For example, the user can measure the period (in TIMx_CCR1 register) and the duty cycle (in TIMx_CCR2 register) of the PWM applied on TI1 using the following procedure (depending on CK_INT frequency and prescaler value):

- Select the active input for TIMx_CCR1: write the CC1S bits to 01 in the TIMx_CCMR1 register (TI1 selected).
- Select the active polarity for TI1FP1 (used both for capture in TIMx_CCR1 and counter clear): write the CC1P to ‘0’ and the CC1NP bit to ‘0’ (active on rising edge).
- Select the active input for TIMx_CCR2: write the CC2S bits to 10 in the TIMx_CCMR1 register (TI1 selected).
- Select the active polarity for TI1FP2 (used for capture in TIMx_CCR2): write the CC2P bit to ‘1’ and the CC2NP bit to ’0’(active on falling edge).
- Select the valid trigger input: write the TS bits to 101 in the TIMx_SMCR register (TI1FP1 selected).
- Configure the slave mode controller in reset mode: write the SMS bits to 100 in the TIMx_SMCR register.
- Enable the captures: write the CC1E and CC2E bits to ‘1 in the TIMx_CCER register.

Figure 162. PWM input mode timing

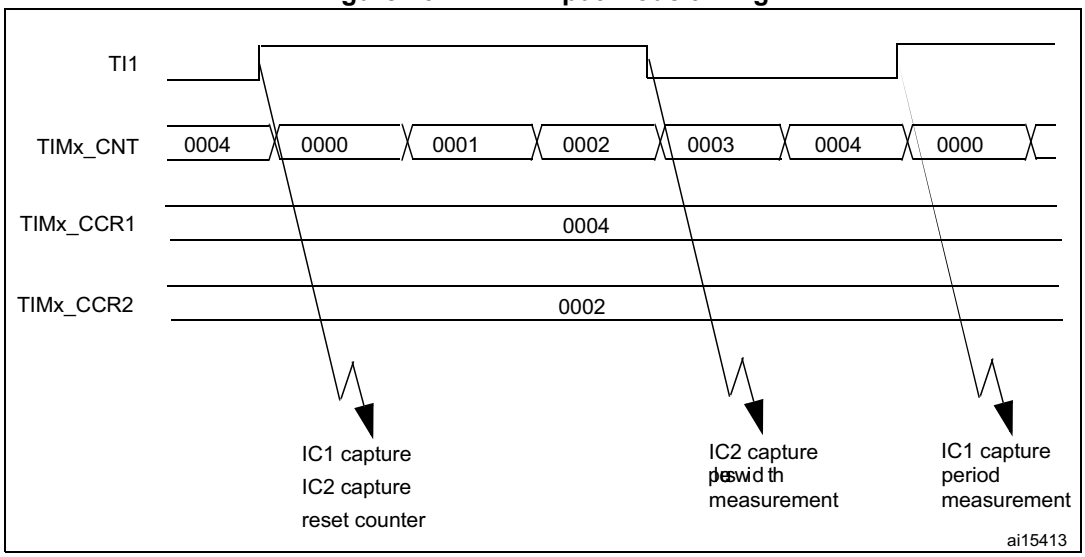

18.3.7 Forced output mode

In output mode (CCxS bits = 00 in the TIMx_CCMRx register), each output compare signal (OCxREF and then OCx) can be forced to active or inactive level directly by software, independently of any comparison between the output compare register and the counter.

To force an output compare signal (ocxref/OCx) to its active level, the user just needs to write 101 in the OCxM bits in the corresponding TIMx_CCMRx register. Thus ocxref is forced high (OCxREF is always active high) and OCx get opposite value to CCxP polarity bit.

e.g.: CCxP=0 (OCx active high) => OCx is forced to high level.

ocxref signal can be forced low by writing the OCxM bits to 100 in the TIMx_CCMRx register.

Anyway, the comparison between the TIMx_CCRx shadow register and the counter is still performed and allows the flag to be set. Interrupt and DMA requests can be sent accordingly. This is described in the Output Compare Mode section.

18.3.8 Output compare mode

This function is used to control an output waveform or indicating when a period of time has elapsed.

When a match is found between the capture/compare register and the counter, the output compare function:

- Assigns the corresponding output pin to a programmable value defined by the output compare mode (OCxM bits in the TIMx_CCMRx register) and the output polarity (CCxP bit in the TIMx_CCER register). The output pin can keep its level (OCXM=000), be set active (OCxM=001), be set inactive (OCxM=010) or can toggle (OCxM=011) on match.
- Sets a flag in the interrupt status register (CCxIF bit in the TIMx_SR register).
- Generates an interrupt if the corresponding interrupt mask is set (CCXIE bit in the TIMx_DIER register).
- Sends a DMA request if the corresponding enable bit is set (CCxDE bit in the TIMx_DIER register, CCDS bit in the TIMx_CR2 register for the DMA request selection).

The TIMx_CCRx registers can be programmed with or without preload registers using the OCxPE bit in the TIMx_CCMRx register.

In output compare mode, the update event UEV has no effect on ocxref and OCx output. The timing resolution is one count of the counter. Output compare mode can also be used to output a single pulse (in One-pulse mode).

Procedure:

1. Select the counter clock (internal, external, prescaler).
2. Write the desired data in the TIMx_ARR and TIMx_CCRx registers.
3. Set the CCxIE and/or CCxDE bits if an interrupt and/or a DMA request is to be generated.
4. Select the output mode. For example, the user must write OCxM=011, OCxPE=0, CCxP=0 and CCxE=1 to toggle OCx output pin when CNT matches CCRx, CCRx preload is not used, OCx is enabled and active high.
5. Enable the counter by setting the CEN bit in the TIMx_CR1 register.

The TIMx_CCRx register can be updated at any time by software to control the output waveform, provided that the preload register is not enabled (OCxPE=0, else TIMx_CCRx shadow register is updated only at the next update event UEV). An example is given in *Figure 163*.

Figure 163. Output compare mode, toggle on OC1

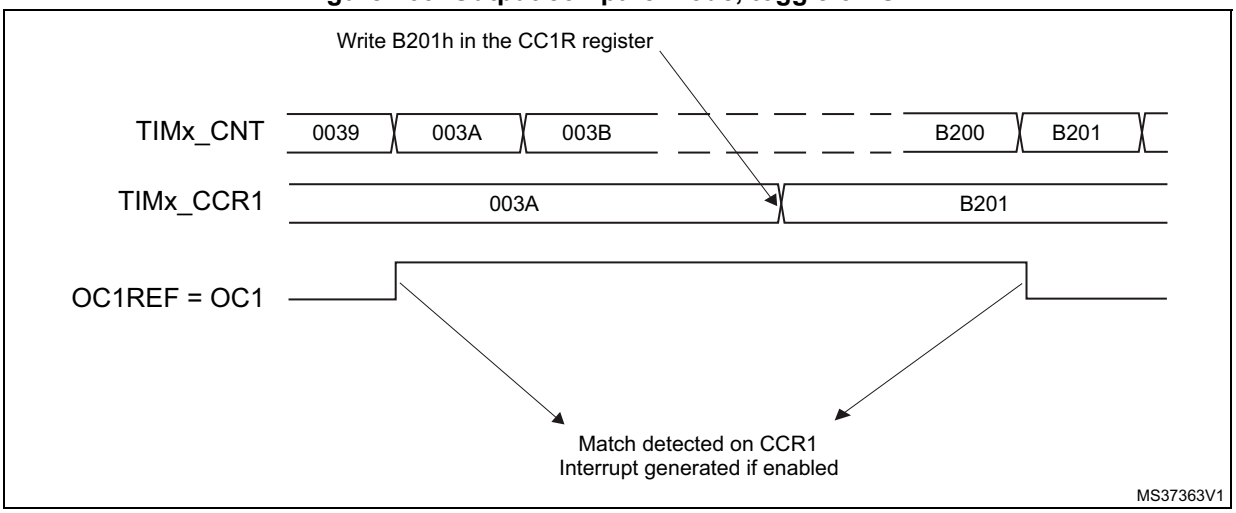

18.3.9 PWM mode

Pulse width modulation mode allows generating a signal with a frequency determined by the value of the TIMx_ARR register and a duty cycle determined by the value of the TIMx_CCRx register.

The PWM mode can be selected independently on each channel (one PWM per OCx output) by writing 110 (PWM mode 1) or ‘111 (PWM mode 2) in the OCxM bits in the TIMx_CCMRx register. The user must enable the corresponding preload register by setting the OCxPE bit in the TIMx_CCMRx register, and eventually the auto-reload preload register by setting the ARPE bit in the TIMx_CR1 register.

As the preload registers are transferred to the shadow registers only when an update event occurs, before starting the counter, the user has to initialize all the registers by setting the UG bit in the TIMx_EGR register.

OCx polarity is software programmable using the CCxP bit in the TIMx_CCER register. It can be programmed as active high or active low. OCx output is enabled by the CCxE bit in the TIMx_CCER register. Refer to the TIMx_CCERx register description for more details.

In PWM mode (1 or 2), TIMx_CNT and TIMx_CCRx are always compared to determine whether TIMx_CCRx≤TIMx_CNT or TIMx_CNT≤TIMx_CCRx (depending on the direction of the counter). However, to comply with the ETRF (OCREF can be cleared by an external event through the ETR signal until the next PWM period), the OCREF signal is asserted only:

- When the result of the comparison changes, or
- When the output compare mode (OCxM bits in TIMx_CCMRx register) switches from the “frozen” configuration (no comparison, OCxM=‘000) to one of the PWM modes (OCxM=‘110 or ‘111).

This forces the PWM by software while the timer is running.

The timer is able to generate PWM in edge-aligned mode or center-aligned mode depending on the CMS bits in the TIMx_CR1 register.

PWM edge-aligned mode

Upcounting configuration

Upcounting is active when the DIR bit in the TIMx_CR1 register is low. Refer to *Upcounting mode*.

In the following example, we consider PWM mode 1. The reference PWM signal OCxREF is high as long as TIMx_CNT <TIMx_CCRx else it becomes low. If the compare value in TIMx_CCRx is greater than the auto-reload value (in TIMx_ARR) then OCxREF is held at ‘1. If the compare value is 0 then OCxREF is held at ‘0. *Figure 164* shows some edge-aligned PWM waveforms in an example where TIMx_ARR=8.

Figure 164. Edge-aligned PWM waveforms (ARR=8)

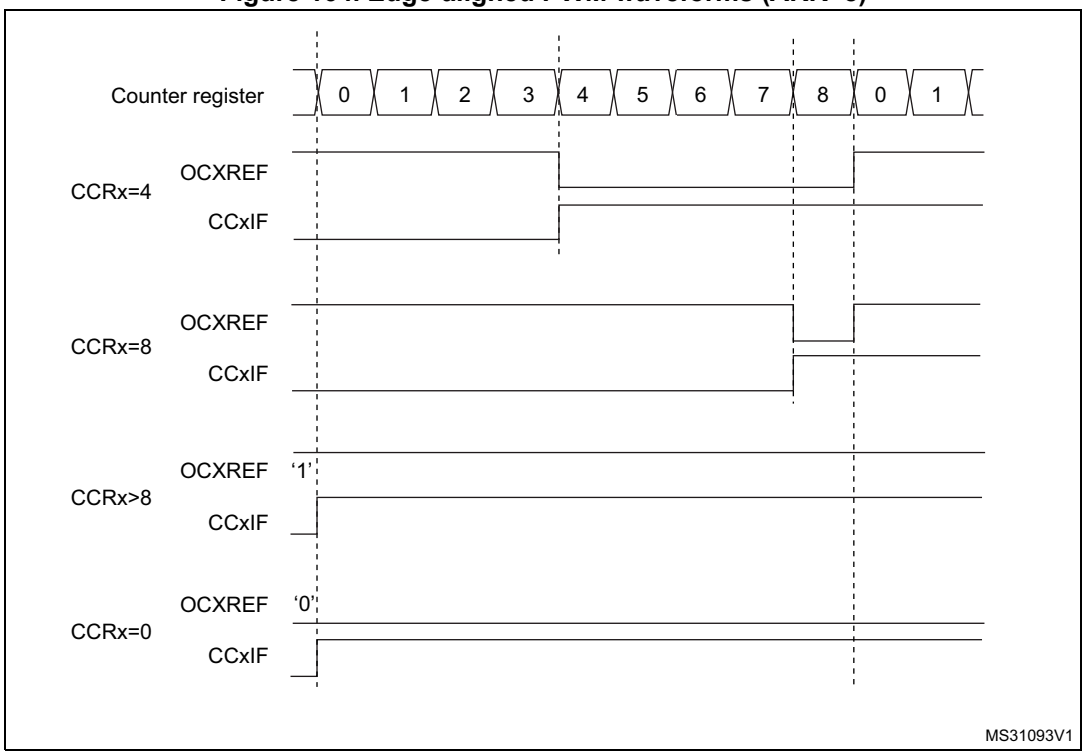

Downcounting configuration

Downcounting is active when DIR bit in TIMx_CR1 register is high. Refer to *Downcounting mode*.

In PWM mode 1, the reference signal ocxref is low as long as TIMx_CNT>TIMx_CCRx else it becomes high. If the compare value in TIMx_CCRx is greater than the auto-reload value in TIMx_ARR, then ocxref is held at ‘1. 0% PWM is not possible in this mode.

PWM center-aligned mode

Center-aligned mode is active when the CMS bits in TIMx_CR1 register are different from ‘00 (all the remaining configurations having the same effect on the ocxref/OCx signals). The compare flag is set when the counter counts up, when it counts down or both when it counts

up and down depending on the CMS bits configuration. The direction bit (DIR) in the TIMx_CR1 register is updated by hardware and must not be changed by software. Refer to *Center-aligned mode (up/down counting)*.

Figure 165 shows some center-aligned PWM waveforms in an example where:

- TIMx_ARR=8,
- PWM mode is the PWM mode 1,
- The flag is set when the counter counts down corresponding to the center-aligned mode 1 selected for CMS=01 in TIMx_CR1 register.

Figure 165. Center-aligned PWM waveforms (ARR=8)

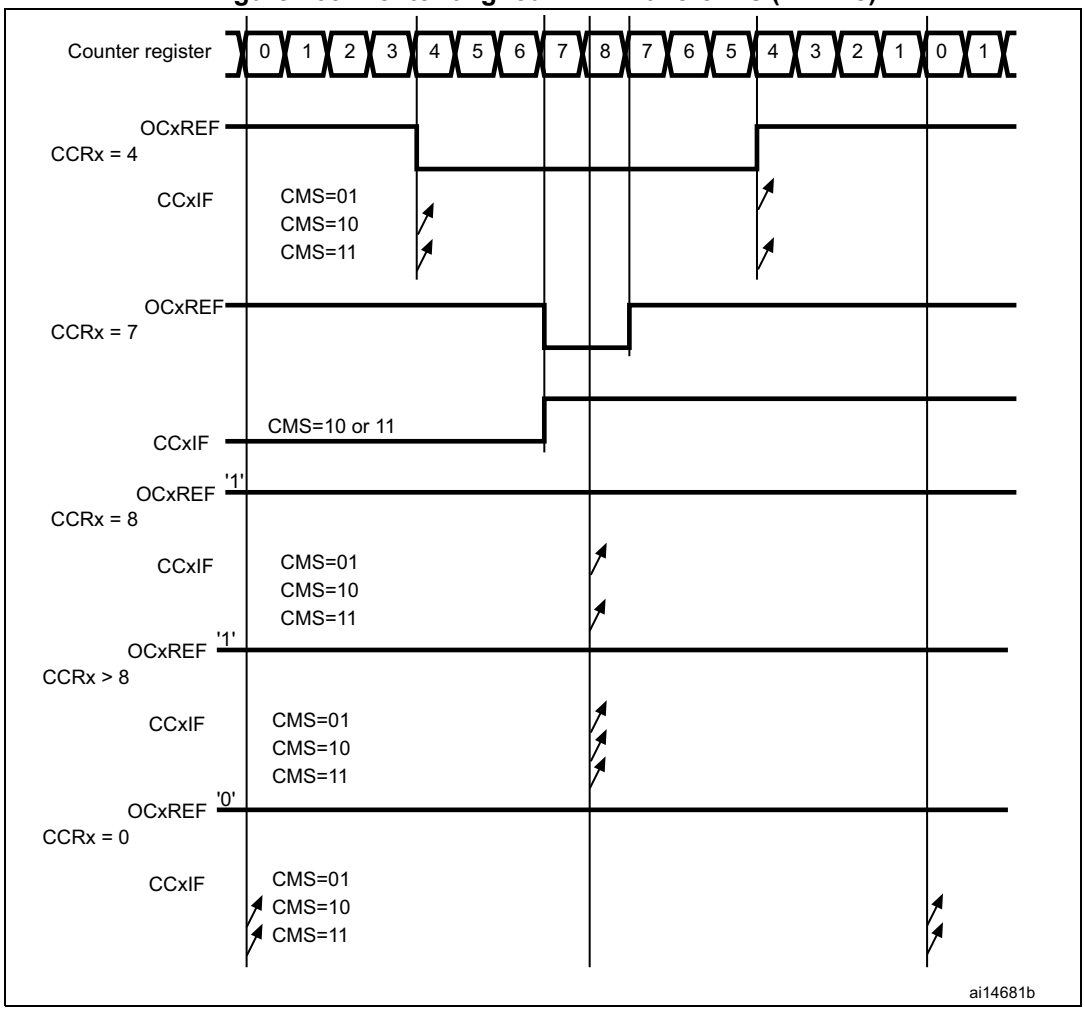

Hints on using center-aligned mode:

- When starting in center-aligned mode, the current up-down configuration is used. It means that the counter counts up or down depending on the value written in the DIR bit

in the TIMx_CR1 register. Moreover, the DIR and CMS bits must not be changed at the same time by the software.

- Writing to the counter while running in center-aligned mode is not recommended as it can lead to unexpected results. In particular:
  - The direction is not updated if the user writes a value in the counter that is greater than the auto-reload value (TIMx_CNT>TIMx_ARR). For example, if the counter was counting up, it continues to count up.
  - The direction is updated if the user writes 0 or write the TIMx_ARR value in the counter but no Update Event UEV is generated.
- The safest way to use center-aligned mode is to generate an update by software (setting the UG bit in the TIMx_EGR register) just before starting the counter and not to write the counter while it is running.

18.3.10 One-pulse mode

One-pulse mode (OPM) is a particular case of the previous modes. It allows the counter to be started in response to a stimulus and to generate a pulse with a programmable length after a programmable delay.

Starting the counter can be controlled through the slave mode controller. Generating the waveform can be done in output compare mode or PWM mode. Select One-pulse mode by setting the OPM bit in the TIMx_CR1 register. This makes the counter stop automatically at the next update event UEV.

A pulse can be correctly generated only if the compare value is different from the counter initial value. Before starting (when the timer is waiting for the trigger), the configuration must be:

- In upcounting: CNT<CCRx≤ARR (in particular, 0<CCRx),
- In downcounting: CNT>CCRx.

Figure 166. Example of one-pulse mode

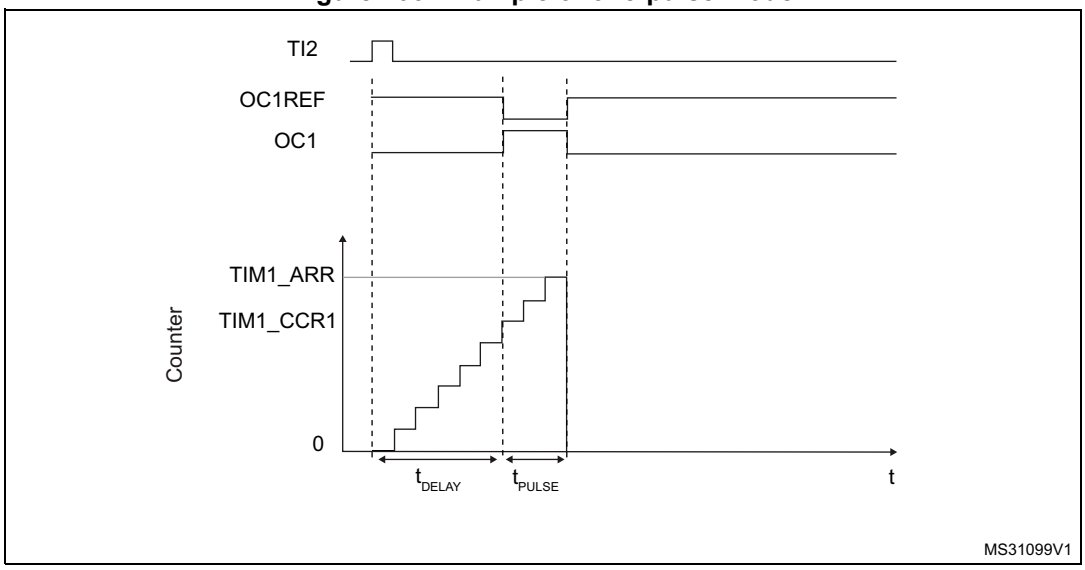

For example the user may want to generate a positive pulse on OC1 with a length of t_{PULSE} and after a delay of t_{DELAY} as soon as a positive edge is detected on the TI2 input pin.

Let's use TI2FP2 as trigger 1:

- Map TI2FP2 on TI2 by writing CC2S=01 in the TIMx_CCMR1 register.
- TI2FP2 must detect a rising edge, write CC2P=0 and CC2NP='0' in the TIMx_CCER register.
- Configure TI2FP2 as trigger for the slave mode controller (TRGI) by writing TS=110 in the TIMx_SMCR register.
- TI2FP2 is used to start the counter by writing SMS to '110 in the TIMx_SMCR register (trigger mode).

The OPM waveform is defined by writing the compare registers (taking into account the clock frequency and the counter prescaler).

- The t_{DELAY} is defined by the value written in the TIMx_CCR1 register.
- The t_{PULSE} is defined by the difference between the auto-reload value and the compare value (TIMx_ARR - TIMx_CCR + 1).
- Let us say user wants to build a waveform with a transition from '0 to '1 when a compare match occurs and a transition from '1 to '0 when the counter reaches the auto-reload value. To do this enable PWM mode 2 by writing OC1M=111 in the TIMx_CCMR1 register. The user can optionally enable the preload registers by writing OC1PE=1 in the TIMx_CCMR1 register and ARPE in the TIMx_CR1 register. In this case write the compare value in the TIMx_CCR1 register, the auto-reload value in the TIMx_ARR register, generate an update by setting the UG bit and wait for external trigger event on TI2. CC1P is written to '0 in this example.

In our example, the DIR and CMS bits in the TIMx_CR1 register should be low.

User only wants one pulse (Single mode), so write '1 in the OPM bit in the TIMx_CR1 register to stop the counter at the next update event (when the counter rolls over from the auto-reload value back to 0). When OPM bit in the TIMx_CR1 register is set to '0', so the Repetitive Mode is selected.

Particular case: OCx fast enable:

In One-pulse mode, the edge detection on TIx input set the CEN bit which enables the counter. Then the comparison between the counter and the compare value makes the output toggle. But several clock cycles are needed for these operations and it limits the minimum delay t_{DELAY} min we can get.

To output a waveform with the minimum delay, the user can set the OCxFE bit in the TIMx_CCMRx register. Then OCxRef (and OCx) is forced in response to the stimulus, without taking in account the comparison. Its new level is the same as if a compare match had occurred. OCxFE acts only if the channel is configured in PWM1 or PWM2 mode.

18.3.11 Clearing the OCxREF signal on an external event

The OCxREF signal for a given channel can be driven Low by applying a High level to the ETRF input (OCxCE enable bit of the corresponding TIMx_CCMRx register set to '1'). The OCxREF signal remains Low until the next update event, UEV, occurs.

This function can only be used in output compare and PWM modes, and does not work in forced mode.

For example, the ETR signal can be connected to the output of a comparator to be used for current handling. In this case, ETR must be configured as follows:

1. The external trigger prescaler should be kept off: bits ETPS[1:0] in the TIMx_SMCR register are cleared to 00.
2. The external clock mode 2 must be disabled: bit ECE in the TIM1_SMCR register is cleared to 0.
3. The external trigger polarity (ETP) and the external trigger filter (ETF) can be configured according to the application's needs.

Figure 167 shows the behavior of the OCxREF signal when the ETRF input becomes high, for both values of the OCxCE enable bit. In this example, the timer TIMx is programmed in PWM mode.

Figure 167. Clearing TIMx OCxREF

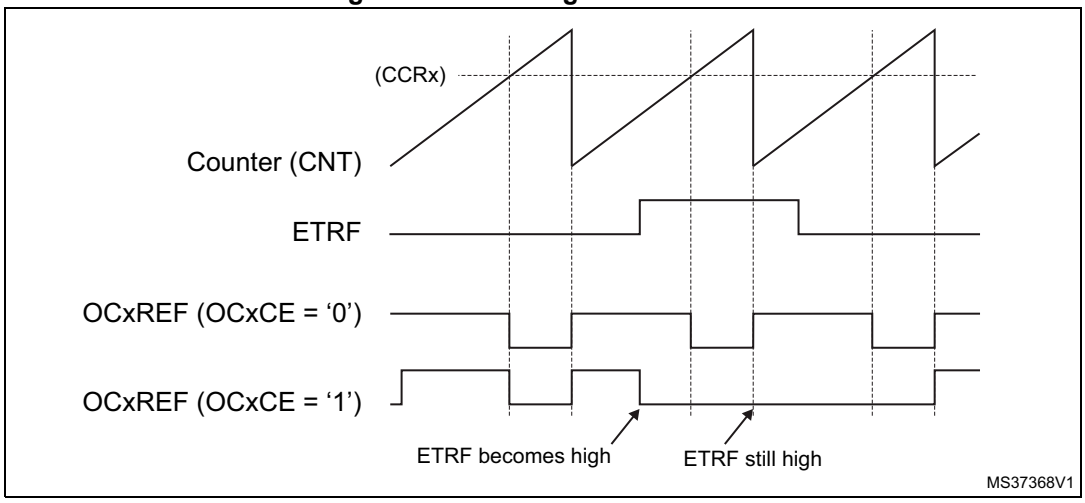

1. In case of a PWM with a 100% duty cycle (if CCRx>ARR), OCxREF is enabled again at the next counter overflow.

18.3.12 Encoder interface mode

To select Encoder Interface mode write SMS='001 in the TIMx_SMCR register if the counter is counting on TI2 edges only, SMS=010 if it is counting on TI1 edges only and SMS=011 if it is counting on both TI1 and TI2 edges.

Select the TI1 and TI2 polarity by programming the CC1P and CC2P bits in the TIMx_CCER register. When needed, program the input filter as well.

The two inputs TI1 and TI2 are used to interface to an incremental encoder. Refer to *Table 97*. The counter is clocked by each valid transition on TI1FP1 or TI2FP2 (TI1 and TI2 after input filter and polarity selection, TI1FP1=TI1 if not filtered and not inverted, TI2FP2=TI2 if not filtered and not inverted) assuming that it is enabled (CEN bit in TIMx_CR1 register written to '1). The sequence of transitions of the two inputs is evaluated and generates count pulses as well as the direction signal. Depending on the sequence the counter counts up or down, the DIR bit in the TIMx_CR1 register is modified by hardware accordingly. The DIR bit is calculated at each transition on any input (TI1 or TI2), whatever the counter is counting on TI1 only, TI2 only or both TI1 and TI2.

Encoder interface mode acts simply as an external clock with direction selection. This means that the counter just counts continuously between 0 and the auto-reload value in the TIMx_ARR register (0 to ARR or ARR down to 0 depending on the direction). So the user must configure TIMx_ARR before starting. In the same way, the capture, compare, prescaler, trigger output features continue to work as normal.

In this mode, the counter is modified automatically following the speed and the direction of the incremental encoder and its content, therefore, always represents the encoder's position. The count direction correspond to the rotation direction of the connected sensor. The table summarizes the possible combinations, assuming TI1 and TI2 don't switch at the same time.

Table 97. Counting direction versus encoder signals

Active edge	Level on opposite signal (TI1FP1 for TI2, TI2FP2 for TI1)	TI1FP1 signal		TI2FP2 signal	
		Rising	Falling	Rising	Falling
Counting on TI1 only	High	Down	Up	No Count	No Count
	Low	Up	Down	No Count	No Count
Counting on TI2 only	High	No Count	No Count	Up	Down
	Low	No Count	No Count	Down	Up
Counting on TI1 and TI2	High	Down	Up	Up	Down
	Low	Up	Down	Down	Up

An external incremental encoder can be connected directly to the MCU without external interface logic. However, comparators are normally be used to convert the encoder's differential outputs to digital signals. This greatly increases noise immunity. The third encoder output which indicate the mechanical zero position, may be connected to an external interrupt input and trigger a counter reset.

Figure 168 gives an example of counter operation, showing count signal generation and direction control. It also shows how input jitter is compensated where both edges are selected. This might occur if the sensor is positioned near to one of the switching points. For this example we assume that the configuration is the following:

- CC1S= '01' (TIMx_CCMR1 register, TI1FP1 mapped on TI1)
- CC2S= '01' (TIMx_CCMR2 register, TI2FP2 mapped on TI2)
- CC1P= '0', CC1NP = '0', IC1F ='0000' (TIMx_CCER register, TI1FP1 noninverted, TI1FP1=TI1)
- CC2P= '0', CC2NP = '0', IC2F ='0000' (TIMx_CCER register, TI2FP2 noninverted, TI2FP2=TI2)
- SMS= '011' (TIMx_SMCR register, both inputs are active on both rising and falling edges)
- CEN = 1 (TIMx_CR1 register, Counter is enabled)

Figure 168. Example of counter operation in encoder interface mode

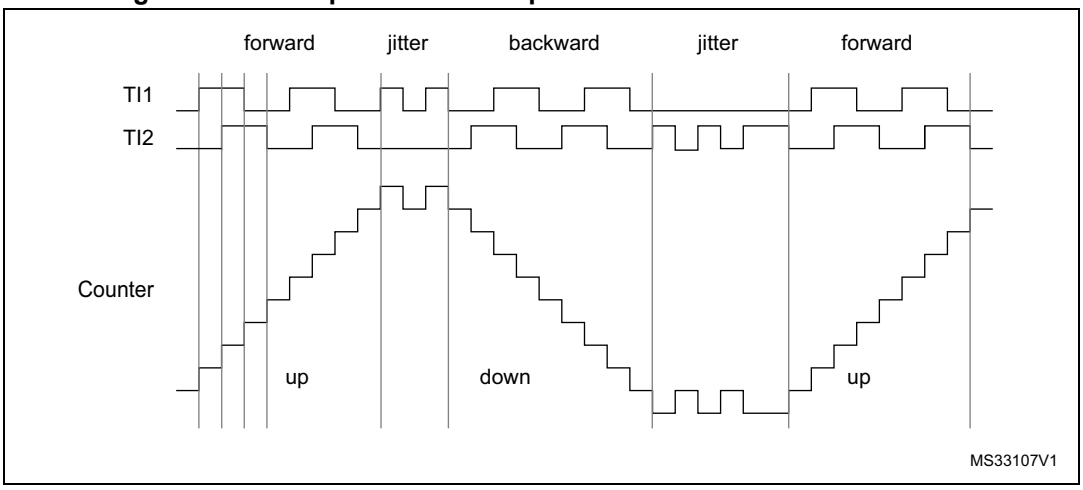

Figure 169 gives an example of counter behavior when TI1FP1 polarity is inverted (same configuration as above except CC1P=1).

Figure 169. Example of encoder interface mode with TI1FP1 polarity inverted

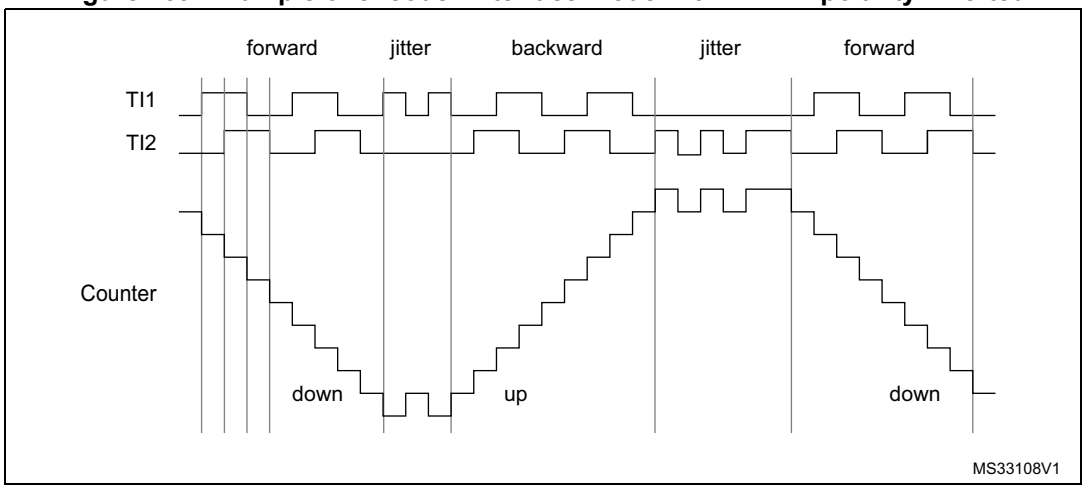

The timer, when configured in Encoder Interface mode provides information on the sensor's current position. The user can obtain dynamic information (speed, acceleration, deceleration) by measuring the period between two encoder events using a second timer configured in capture mode. The output of the encoder which indicates the mechanical zero can be used for this purpose. Depending on the time between two events, the counter can also be read at regular times. The user can do this by latching the counter value into a third input capture register if available (then the capture signal must be periodic and can be generated by another timer). when available, it is also possible to read its value through a DMA request generated by a Real-Time clock.

18.3.13 Timer input XOR function

The TI1S bit in the TIM_CR2 register, allows the input filter of channel 1 to be connected to the output of a XOR gate, combining the three input pins TIMx_CH1 to TIMx_CH3.

The XOR output can be used with all the timer input functions such as trigger or input capture.

18.3.14 Timers and external trigger synchronization

The TIMx Timers can be synchronized with an external trigger in several modes: Reset mode, Gated mode and Trigger mode.

Slave mode: Reset mode

The counter and its prescaler can be reinitialized in response to an event on a trigger input. Moreover, if the URS bit from the TIMx_CR1 register is low, an update event UEV is generated. Then all the preloaded registers (TIMx_ARR, TIMx_CCRx) are updated.

In the following example, the upcounter is cleared in response to a rising edge on TI1 input:

- Configure the channel 1 to detect rising edges on TI1. Configure the input filter duration (in this example, we don't need any filter, so we keep IC1F=0000). The capture prescaler is not used for triggering, so the user does not need to configure it. The CC1S bits select the input capture source only, CC1S = 01 in the TIMx_CCMR1 register. Write CC1P=0 and CC1NP=0 in TIMx_CCER register to validate the polarity (and detect rising edges only).
- Configure the timer in reset mode by writing SMS=100 in TIMx_SMCR register. Select TI1 as the input source by writing TS=101 in TIMx_SMCR register.
- Start the counter by writing CEN=1 in the TIMx_CR1 register.

The counter starts counting on the internal clock, then behaves normally until TI1 rising edge. When TI1 rises, the counter is cleared and restarts from 0. In the meantime, the trigger flag is set (TIF bit in the TIMx_SR register) and an interrupt request, or a DMA request can be sent if enabled (depending on the TIE and TDE bits in TIMx_DIER register).

Figure 170 shows this behavior when the auto-reload register TIMx_ARR=0x36. The delay between the rising edge on TI1 and the actual reset of the counter is due to the resynchronization circuit on TI1 input.

Figure 170. Control circuit in reset mode

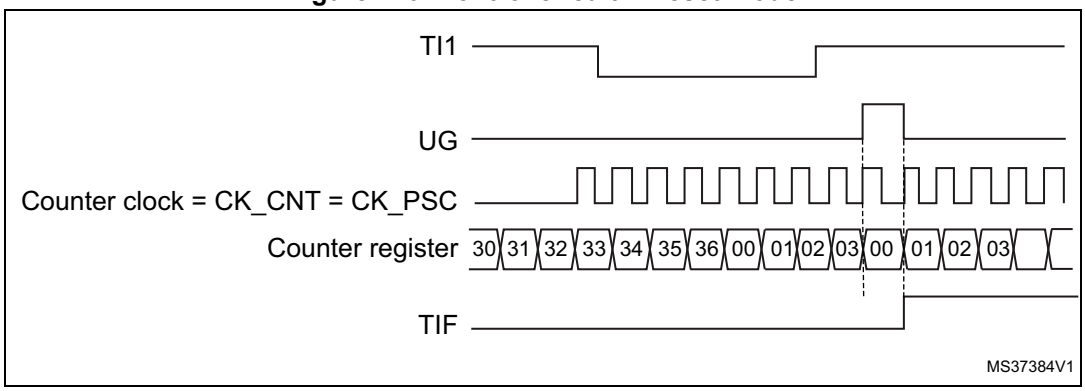

Slave mode: Gated mode

The counter can be enabled depending on the level of a selected input.

In the following example, the upcounter counts only when TI1 input is low:

- Configure the channel 1 to detect low levels on TI1. Configure the input filter duration (in this example, we don't need any filter, so we keep IC1F=0000). The capture prescaler is not used for triggering, so the user does not need to configure it. The CC1S bits select the input capture source only, CC1S=01 in TIMx_CCMR1 register. Write CC1P=1 in TIMx_CCER register to validate the polarity (and detect low level only).
- Configure the timer in gated mode by writing SMS=101 in TIMx_SMCR register. Select TI1 as the input source by writing TS=101 in TIMx_SMCR register.
- Enable the counter by writing CEN=1 in the TIMx_CR1 register (in gated mode, the counter doesn't start if CEN=0, whatever is the trigger input level).

The counter starts counting on the internal clock as long as TI1 is low and stops as soon as TI1 becomes high. The TIF flag in the TIMx_SR register is set both when the counter starts or stops.

The delay between the rising edge on TI1 and the actual stop of the counter is due to the resynchronization circuit on TI1 input.

Figure 171. Control circuit in gated mode

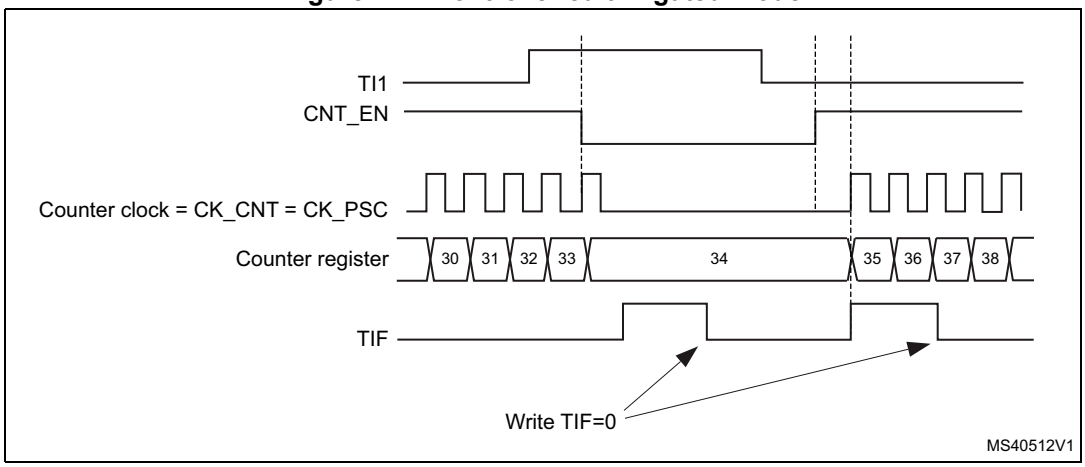

1. The configuration "CCxP=CCxNP=1" (detection of both rising and falling edges) does not have any effect in gated mode because gated mode acts on a level and not on an edge.

Slave mode: Trigger mode

The counter can start in response to an event on a selected input.

In the following example, the upcounter starts in response to a rising edge on TI2 input:

- Configure the channel 2 to detect rising edges on TI2. Configure the input filter duration (in this example, we don't need any filter, so we keep IC2F=0000). The capture prescaler is not used for triggering, so the user does not need to configure it. CC2S bits are selecting the input capture source only, CC2S=01 in TIMx_CCMR1 register. Write CC2P=1 in TIMx_CCER register to validate the polarity (and detect low level only).
- Configure the timer in trigger mode by writing SMS=110 in TIMx_SMCR register. Select TI2 as the input source by writing TS=110 in TIMx_SMCR register.

When a rising edge occurs on TI2, the counter starts counting on the internal clock and the TIF flag is set.

The delay between the rising edge on TI2 and the actual start of the counter is due to the resynchronization circuit on TI2 input.

Figure 172. Control circuit in trigger mode

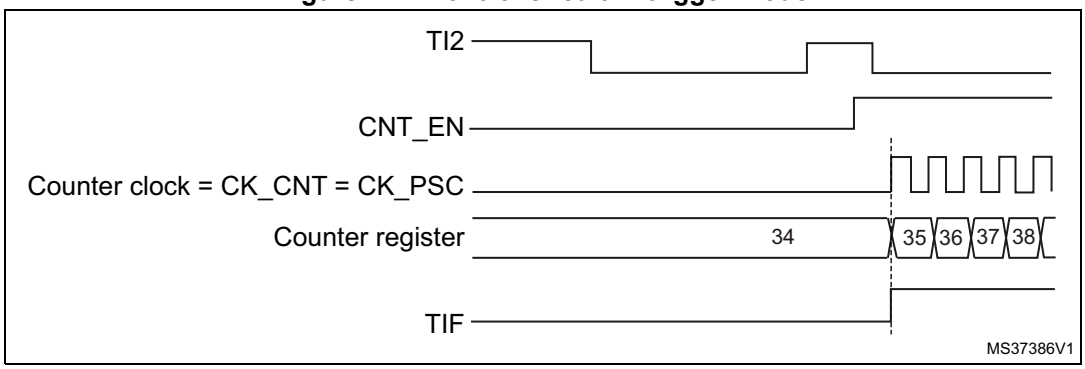

Slave mode: External Clock mode 2 + trigger mode

The external clock mode 2 can be used in addition to another slave mode (except external clock mode 1 and encoder mode). In this case, the ETR signal is used as external clock input, and another input can be selected as trigger input when operating in reset mode, gated mode or trigger mode. It is recommended not to select ETR as TRGI through the TS bits of TIMx_SMCR register.

In the following example, the upcounter is incremented at each rising edge of the ETR signal as soon as a rising edge of TI1 occurs:

1. Configure the external trigger input circuit by programming the TIMx_SMCR register as follows:
   - ETF = 0000: no filter
   - ETPS = 00: prescaler disabled
   - ETP = 0: detection of rising edges on ETR and ECE=1 to enable the external clock mode 2.
2. Configure the channel 1 as follows, to detect rising edges on TI:
   - IC1F = 0000: no filter.
   - The capture prescaler is not used for triggering and does not need to be configured.
   - CC1S = 01 in TIMx_CCMR1 register to select only the input capture source
   - CC1P = 0 in TIMx_CCER register to validate the polarity (and detect rising edge only).
3. Configure the timer in trigger mode by writing SMS=110 in TIMx_SMCR register. Select TI1 as the input source by writing TS=101 in TIMx_SMCR register.

A rising edge on TI1 enables the counter and sets the TIF flag. The counter then counts on ETR rising edges.

The delay between the rising edge of the ETR signal and the actual reset of the counter is due to the resynchronization circuit on ETRP input.

Figure 173. Control circuit in external clock mode 2 + trigger mode

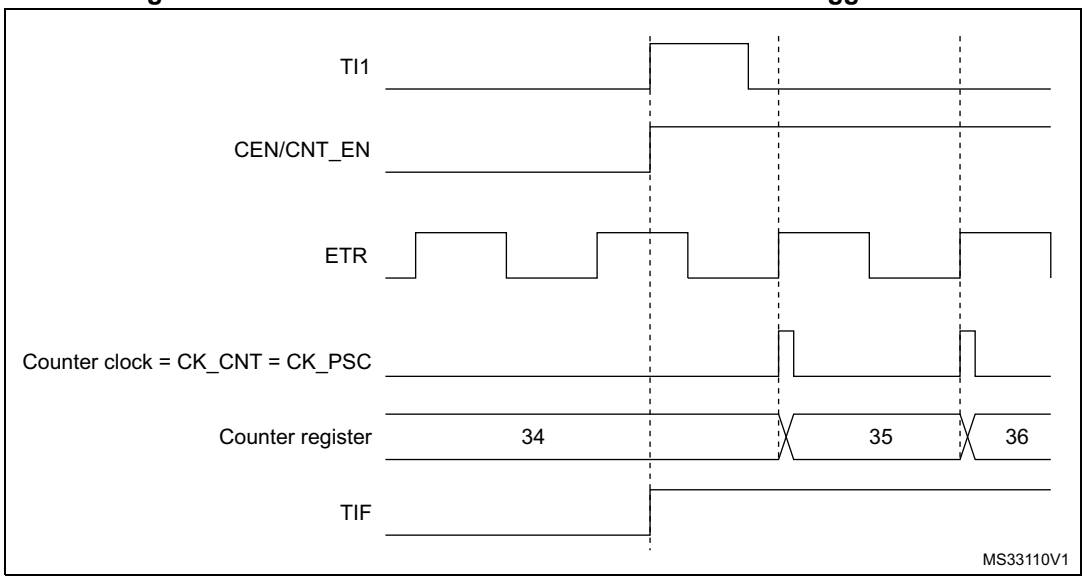

18.3.15 Timer synchronization

The TIMx timers are linked together internally for timer synchronization or chaining. When one Timer is configured in Master Mode, it can reset, start, stop or clock the counter of another Timer configured in Slave Mode.

Figure 174 presents an overview of the trigger selection and the master mode selection blocks.

Note: The clock of the slave timer must be enabled prior to receiving events from the master timer, and must not be changed on-the-fly while triggers are received from the master timer.

Using one timer as prescaler for another timer

Figure 174. Master/Slave timer example

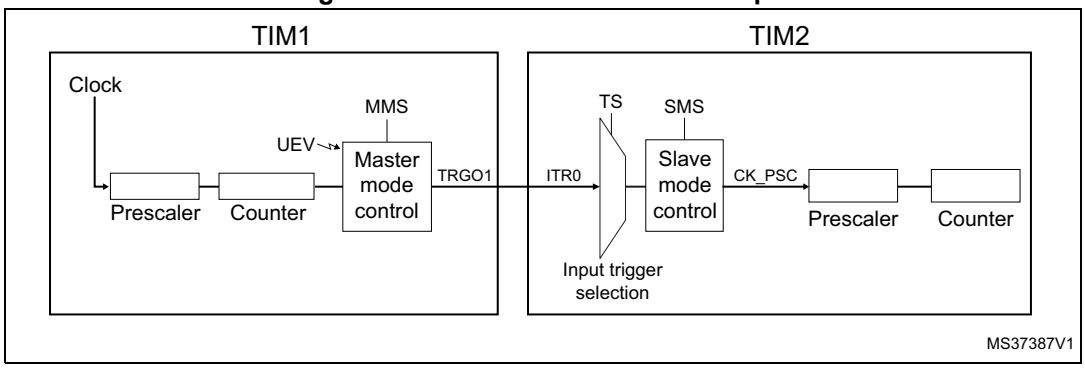

For example, the user can configure Timer 1 to act as a prescaler for Timer 2 (see *Figure 174*). To do this:

- Configure Timer 1 in master mode so that it outputs a periodic trigger signal on each update event UEV. If you write MMS=010 in the TIM1_CR2 register, a rising edge is output on TRGO1 each time an update event is generated.
- To connect the TRGO1 output of Timer 1 to Timer 2, Timer 2 must be configured in slave mode using ITR0 as internal trigger. You select this through the TS bits in the TIM2_SMCR register (writing TS=000).
- Then you put the slave mode controller in external clock mode 1 (write SMS=111 in the TIM2_SMCR register). This causes Timer 2 to be clocked by the rising edge of the periodic Timer 1 trigger signal (which correspond to the timer 1 counter overflow).
- Finally both timers must be enabled by setting their respective CEN bits (TIMx_CR1 register).

Note: If OCx is selected on Timer 1 as trigger output (MMS=1xx), its rising edge is used to clock the counter of timer 2.

Using one timer to enable another timer

In this example, we control the enable of Timer 2 with the output compare 1 of Timer 1. Refer to *Figure 174* for connections. Timer 2 counts on the divided internal clock only when OC1REF of Timer 1 is high. Both counter clock frequencies are divided by 3 by the prescaler compared to CK_INT ($f_{CK_CNT} = f_{CK_INT}/3$).

- Configure Timer 1 master mode to send its Output Compare 1 Reference (OC1REF) signal as trigger output (MMS=100 in the TIM1_CR2 register).
- Configure the Timer 1 OC1REF waveform (TIM1_CCMR1 register).
- Configure Timer 2 to get the input trigger from Timer 1 (TS=000 in the TIM2_SMCR register).
- Configure Timer 2 in gated mode (SMS=101 in TIM2_SMCR register).
- Enable Timer 2 by writing ‘1 in the CEN bit (TIM2_CR1 register).
- Start Timer 1 by writing ‘1 in the CEN bit (TIM1_CR1 register).

Note: The counter 2 clock is not synchronized with counter 1, this mode only affects the Timer 2 counter enable signal.

Figure 175. Gating timer 2 with OC1REF of timer 1

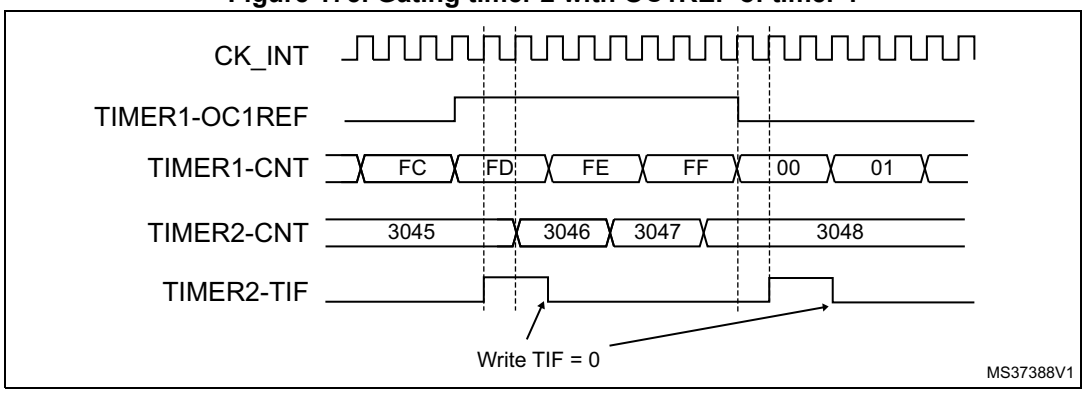

In the example in *Figure 175*, the Timer 2 counter and prescaler are not initialized before being started. So they start counting from their current value. It is possible to start from a given value by resetting both timers before starting Timer 1. You can then write any value

you want in the timer counters. The timers can easily be reset by software using the UG bit in the TIMx_EGR registers.

In the next example, we synchronize Timer 1 and Timer 2. Timer 1 is the master and starts from 0. Timer 2 is the slave and starts from 0xE7. The prescaler ratio is the same for both timers. Timer 2 stops when Timer 1 is disabled by writing ‘0 to the CEN bit in the TIM1_CR1 register:

- Configure Timer 1 master mode to send its Output Compare 1 Reference (OC1REF) signal as trigger output (MMS=100 in the TIM1_CR2 register).
- Configure the Timer 1 OC1REF waveform (TIM1_CCMR1 register).
- Configure Timer 2 to get the input trigger from Timer 1 (TS=000 in the TIM2_SMCR register).
- Configure Timer 2 in gated mode (SMS=101 in TIM2_SMCR register).
- Reset Timer 1 by writing ‘1 in UG bit (TIM1_EGR register).
- Reset Timer 2 by writing ‘1 in UG bit (TIM2_EGR register).
- Initialize Timer 2 to 0xE7 by writing ‘0xE7’ in the timer 2 counter (TIM2_CNTL).
- Enable Timer 2 by writing ‘1 in the CEN bit (TIM2_CR1 register).
- Start Timer 1 by writing ‘1 in the CEN bit (TIM1_CR1 register).
- Stop Timer 1 by writing ‘0 in the CEN bit (TIM1_CR1 register).

Figure 176. Gating timer 2 with Enable of timer 1

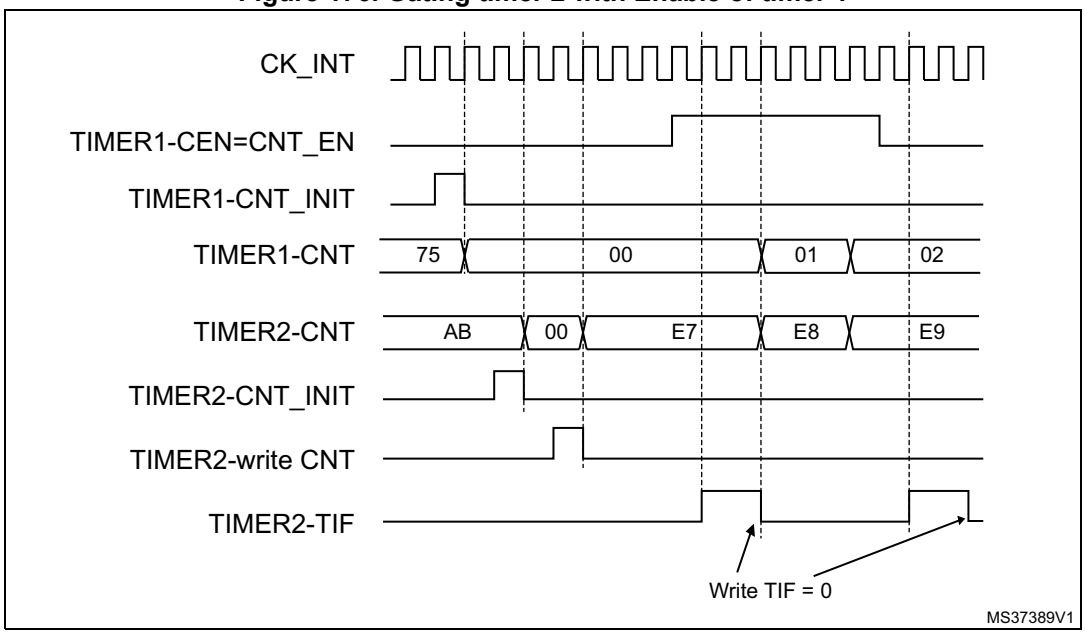

Using one timer to start another timer

In this example, we set the enable of Timer 2 with the update event of Timer 1. Refer to *Figure 174* for connections. Timer 2 starts counting from its current value (which can be nonzero) on the divided internal clock as soon as the update event is generated by Timer 1. When Timer 2 receives the trigger signal its CEN bit is automatically set and the counter counts until we write ‘0 to the CEN bit in the TIM2_CR1 register. Both counter clock frequencies are divided by 3 by the prescaler compared to CK_INT ($f_{CK_CNT} = f_{CK_INT}/3$).

- Configure Timer 1 master mode to send its Update Event (UEV) as trigger output (MMS=010 in the TIM1_CR2 register).
- Configure the Timer 1 period (TIM1_ARR registers).
- Configure Timer 2 to get the input trigger from Timer 1 (TS=000 in the TIM2_SMCR register).
- Configure Timer 2 in trigger mode (SMS=110 in TIM2_SMCR register).
- Start Timer 1 by writing ‘1 in the CEN bit (TIM1_CR1 register).

Figure 177. Triggering timer 2 with update of timer 1

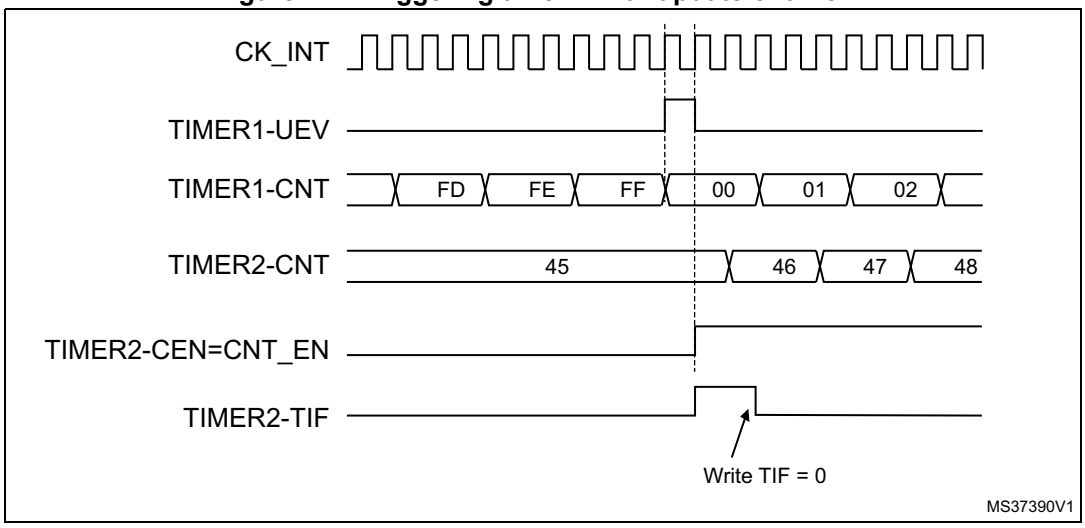

As in the previous example, the user can initialize both counters before starting counting. *Figure 178* shows the behavior with the same configuration as in *Figure 177* but in trigger mode instead of gated mode (SMS=110 in the TIM2_SMCR register).

Figure 178. Triggering timer 2 with Enable of timer 1

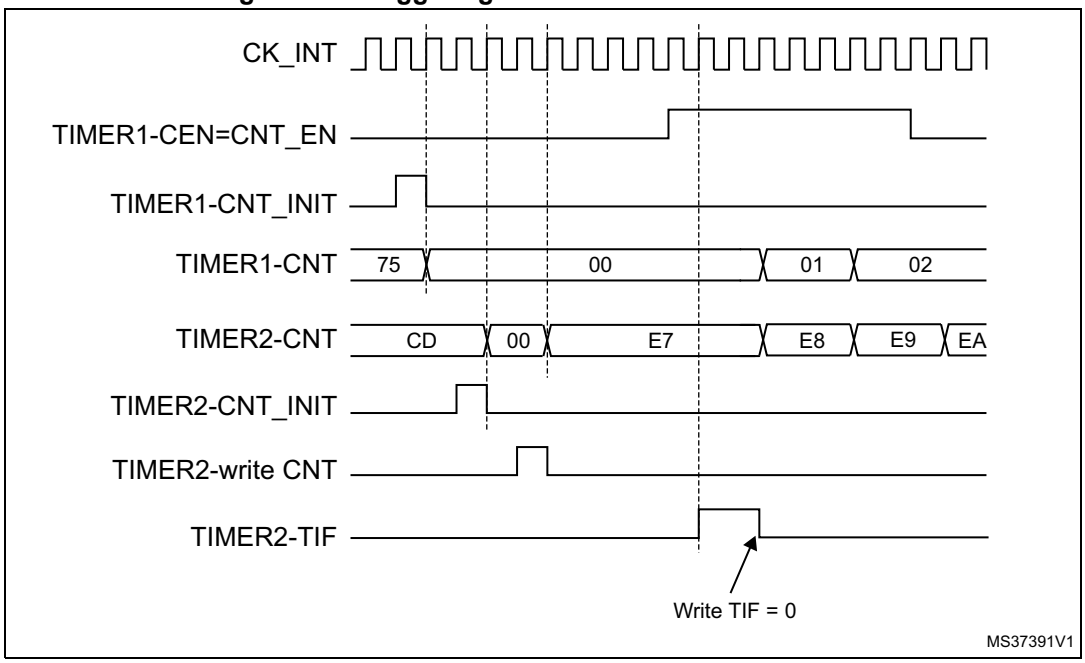

Starting 2 timers synchronously in response to an external trigger

In this example, we set the enable of timer 1 when its TI1 input rises, and the enable of Timer 2 with the enable of Timer 1. Refer to *Figure 174* for connections. To ensure the counters are aligned, Timer 1 must be configured in Master/Slave mode (slave with respect to TI1, master with respect to Timer 2):

- Configure Timer 1 master mode to send its Enable as trigger output (MMS=001 in the TIM1_CR2 register).
- Configure Timer 1 slave mode to get the input trigger from TI1 (TS=100 in the TIM1_SMCR register).
- Configure Timer 1 in trigger mode (SMS=110 in the TIM1_SMCR register).
- Configure the Timer 1 in Master/Slave mode by writing MSM=1 (TIM1_SMCR register).
- Configure Timer 2 to get the input trigger from Timer 1 (TS=000 in the TIM2_SMCR register).
- Configure Timer 2 in trigger mode (SMS=110 in the TIM2_SMCR register).

When a rising edge occurs on TI1 (Timer 1), both counters starts counting synchronously on the internal clock and both TIF flags are set.

Note: In this example both timers are initialized before starting (by setting their respective UG bits). Both counters starts from 0, but you can easily insert an offset between them by writing any of the counter registers (TIMx_CNT). You can see that the master/slave mode insert a delay between CNT_EN and CK_PSC on timer 1.

Figure 179. Triggering timer 1 and 2 with timer 1 TI1 input

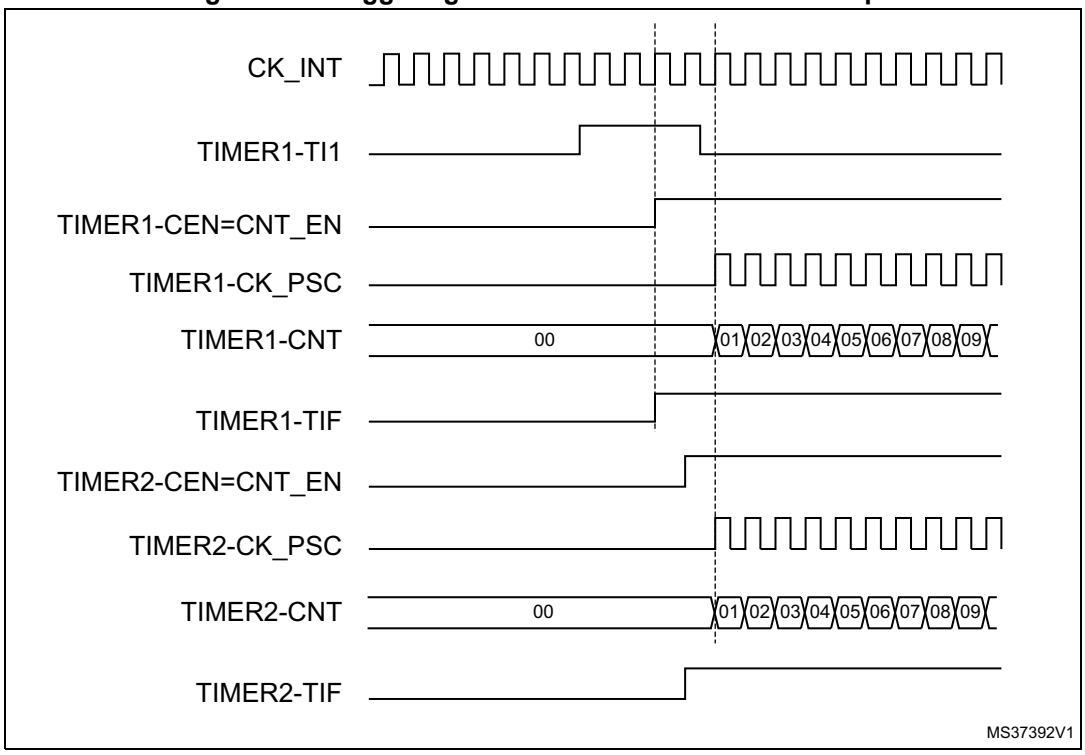

18.3.16 Debug mode

When the microcontroller enters debug mode (Cortex®-M4 with FPU core - halted), the TIMx counter either continues to work normally or stops, depending on DBG_TIMx_STOP configuration bit in DBGMCU module. For more details, refer to *Section 38.16.2: Debug support for timers, watchdog, bxCAN and I^2C*.

18.4 TIM2 to TIM5 registers

Refer to *Section 1.1* for a list of abbreviations used in register descriptions.

The 32-bit peripheral registers have to be written by words (32 bits). All other peripheral registers have to be written by half-words (16 bits) or words (32 bits). Read accesses can be done by bytes (8 bits), half-words (16 bits) or words (32 bits).

18.4.1 TIMx control register 1 (TIMx_CR1)

Address offset: 0x00

Reset value: 0x0000

15	14	13	12	11	10	9	8	7	6	5	4	3	2	1	0
Reserved						CKD[1:0]		ARPE	CMS		DIR	OPM	URS	UDIS	CEN
						rw	rw	rw	rw	rw	rw	rw	rw	rw	rw

Bits 15:10 Reserved, must be kept at reset value.

Bits 9:8 **CKD**: Clock division

This bit-field indicates the division ratio between the timer clock (CK_INT) frequency and sampling clock used by the digital filters (ETR, TIx),

00: $t_{DTS} = t_{CK_INT}$
01: $t_{DTS} = 2 \times t_{CK_INT}$
10: $t_{DTS} = 4 \times t_{CK_INT}$
11: Reserved

Bit 7 **ARPE**: Auto-reload preload enable

0: TIMx_ARR register is not buffered
1: TIMx_ARR register is buffered

Bits 6:5 **CMS**: Center-aligned mode selection

00: Edge-aligned mode. The counter counts up or down depending on the direction bit (DIR).
01: Center-aligned mode 1. The counter counts up and down alternatively. Output compare interrupt flags of channels configured in output (CCxS=00 in TIMx_CCMRx register) are set only when the counter is counting down.
10: Center-aligned mode 2. The counter counts up and down alternatively. Output compare interrupt flags of channels configured in output (CCxS=00 in TIMx_CCMRx register) are set only when the counter is counting up.
11: Center-aligned mode 3. The counter counts up and down alternatively. Output compare interrupt flags of channels configured in output (CCxS=00 in TIMx_CCMRx register) are set both when the counter is counting up or down.

Note: It is not allowed to switch from edge-aligned mode to center-aligned mode as long as the counter is enabled (CEN=1)

Bit 4 **DIR**: Direction

0: Counter used as upcounter
1: Counter used as downcounter

Note: This bit is read only when the timer is configured in Center-aligned mode or Encoder mode.

Bit 3 **OPM**: One-pulse mode

0: Counter is not stopped at update event
1: Counter stops counting at the next update event (clearing the bit CEN)

Bit 2 **URS**: Update request source

This bit is set and cleared by software to select the UEV event sources.

0: Any of the following events generate an update interrupt or DMA request if enabled. These events can be:

- Counter overflow/underflow
- Setting the UG bit
- Update generation through the slave mode controller

1: Only counter overflow/underflow generates an update interrupt or DMA request if enabled.

Bit 1 **UDIS**: Update disable

This bit is set and cleared by software to enable/disable UEV event generation.

0: UEV enabled. The Update (UEV) event is generated by one of the following events:

- Counter overflow/underflow
- Setting the UG bit
- Update generation through the slave mode controller

Buffered registers are then loaded with their preload values.

1: UEV disabled. The Update event is not generated, shadow registers keep their value (ARR, PSC, CCRx). However the counter and the prescaler are reinitialized if the UG bit is set or if a hardware reset is received from the slave mode controller.

Bit 0 **CEN**: Counter enable

0: Counter disabled

1: Counter enabled

Note: External clock, gated mode and encoder mode can work only if the CEN bit has been previously set by software. However trigger mode can set the CEN bit automatically by hardware.

CEN is cleared automatically in one-pulse mode, when an update event occurs.

18.4.2 TIMx control register 2 (TIMx_CR2)

Address offset: 0x04

Reset value: 0x0000

15	14	13	12	11	10	9	8	7	6	5	4	3	2	1	0
Reserved								TI1S	MMS[2:0]			CCDS	Reserved		
								rw	rw	rw	rw	rw			

Bits 15:8 Reserved, must be kept at reset value.

Bit 7 **TI1S**: TI1 selection

0: The TIMx_CH1 pin is connected to TI1 input
1: The TIMx_CH1, CH2 and CH3 pins are connected to the TI1 input (XOR combination)

Bits 6:4 **MMS[2:0]**: Master mode selection

These bits allow to select the information to be sent in master mode to slave timers for synchronization (TRGO). The combination is as follows:
000: **Reset** - the UG bit from the TIMx_EGR register is used as trigger output (TRGO). If the reset is generated by the trigger input (slave mode controller configured in reset mode) then the signal on TRGO is delayed compared to the actual reset.
001: **Enable** - the Counter enable signal, CNT_EN, is used as trigger output (TRGO). It is useful to start several timers at the same time or to control a window in which a slave timer is enabled. The Counter Enable signal is generated by a logic OR between CEN control bit and the trigger input when configured in gated mode.
When the Counter Enable signal is controlled by the trigger input, there is a delay on TRGO, except if the master/slave mode is selected (see the MSM bit description in TIMx_SMCR register).
010: **Update** - The update event is selected as trigger output (TRGO). For instance a master timer can then be used as a prescaler for a slave timer.
011: **Compare Pulse** - The trigger output send a positive pulse when the CC1IF flag is to be set (even if it was already high), as soon as a capture or a compare match occurred. (TRGO)
100: **Compare** - OC1REF signal is used as trigger output (TRGO)
101: **Compare** - OC2REF signal is used as trigger output (TRGO)
110: **Compare** - OC3REF signal is used as trigger output (TRGO)
111: **Compare** - OC4REF signal is used as trigger output (TRGO)

Note: The clock of the slave timer and ADC must be enabled prior to receiving events from the master timer, and must not be changed on-the-fly while triggers are received from the master timer.

Bit 3 **CCDS**: Capture/compare DMA selection

0: CCx DMA request sent when CCx event occurs
1: CCx DMA requests sent when update event occurs

Bits 2:0 Reserved, must be kept at reset value.

18.4.3 TIMx slave mode control register (TIMx_SMCR)

Address offset: 0x08

Reset value: 0x0000

15	14	13	12	11	10	9	8	7	6	5	4	3	2	1	0
ETP	ECE	ETPS[1:0]		ETF[3:0]				MSM	TS[2:0]			Res.	SMS[2:0]		
rw	rw	rw	rw	rw	rw	rw	rw	rw	rw	rw	rw		rw	rw	rw

Bit 15 **ETP**: External trigger polarity

This bit selects whether ETR or $\overline{ETR}$ is used for trigger operations
0: ETR is noninverted, active at high level or rising edge
1: ETR is inverted, active at low level or falling edge

Bit 14 **ECE**: External clock enable

This bit enables External clock mode 2.
0: External clock mode 2 disabled
1: External clock mode 2 enabled. The counter is clocked by any active edge on the ETRF signal.
1: Setting the ECE bit has the same effect as selecting external clock mode 1 with TRGI connected to ETRF (SMS=111 and TS=111).
2: It is possible to simultaneously use external clock mode 2 with the following slave modes: reset mode, gated mode and trigger mode. Nevertheless, TRGI must not be connected to ETRF in this case (TS bits must not be 111).
3: If external clock mode 1 and external clock mode 2 are enabled at the same time, the external clock input is ETRF.

Bits 13:12 **ETPS**: External trigger prescaler

External trigger signal ETRP frequency must be at most 1/4 of CK_INT frequency. A prescaler can be enabled to reduce ETRP frequency. It is useful when inputting fast external clocks.
00: Prescaler OFF
01: ETRP frequency divided by 2
10: ETRP frequency divided by 4
11: ETRP frequency divided by 8

Bits 11:8 **ETF[3:0]**: External trigger filter

This bit-field then defines the frequency used to sample ETRP signal and the length of the digital filter applied to ETRP. The digital filter is made of an event counter in which N consecutive events are needed to validate a transition on the output:
0000: No filter, sampling is done at f_{DTS}
0001: $f_{SAMPLING}=f_{CK_INT}$, N=2
0010: $f_{SAMPLING}=f_{CK_INT}$, N=4
0011: $f_{SAMPLING}=f_{CK_INT}$, N=8
0100: $f_{SAMPLING}=f_{DTS}/2$, N=6
0101: $f_{SAMPLING}=f_{DTS}/2$, N=8
0110: $f_{SAMPLING}=f_{DTS}/4$, N=6
0111: $f_{SAMPLING}=f_{DTS}/4$, N=8
1000: $f_{SAMPLING}=f_{DTS}/8$, N=6
1001: $f_{SAMPLING}=f_{DTS}/8$, N=8
1010: $f_{SAMPLING}=f_{DTS}/16$, N=5
1011: $f_{SAMPLING}=f_{DTS}/16$, N=6
1100: $f_{SAMPLING}=f_{DTS}/16$, N=8
1101: $f_{SAMPLING}=f_{DTS}/32$, N=5
1110: $f_{SAMPLING}=f_{DTS}/32$, N=6
1111: $f_{SAMPLING}=f_{DTS}/32$, N=8

Bit 7 **MSM:** Master/Slave mode

0: No action

1: The effect of an event on the trigger input (TRGI) is delayed to allow a perfect synchronization between the current timer and its slaves (through TRGO). It is useful if we want to synchronize several timers on a single external event.

Bits 6:4 **TS:** Trigger selection

This bit-field selects the trigger input to be used to synchronize the counter.

000: Internal Trigger 0 (ITR0)
001: Internal Trigger 1 (ITR1).
010: Internal Trigger 2 (ITR2).
011: Internal Trigger 3 (ITR3).
100: TI1 Edge Detector (TI1F_ED)
101: Filtered Timer Input 1 (TI1FP1)
110: Filtered Timer Input 2 (TI2FP2)
111: External Trigger input (ETRF)

See *Table 98: TIMx internal trigger connection on page 632* for more details on ITRx meaning for each Timer.

Note: These bits must be changed only when they are not used (e.g. when SMS=000) to avoid wrong edge detections at the transition.

Bit 3 Reserved, must be kept at reset value.

Bits 2:0 **SMS:** Slave mode selection

When external signals are selected the active edge of the trigger signal (TRGI) is linked to the polarity selected on the external input (see Input Control register and Control Register description.

000: Slave mode disabled - if CEN = ‘1 then the prescaler is clocked directly by the internal clock.

001: Encoder mode 1 - Counter counts up/down on TI2FP1 edge depending on TI1FP2 level.

010: Encoder mode 2 - Counter counts up/down on TI1FP2 edge depending on TI2FP1 level.

011: Encoder mode 3 - Counter counts up/down on both TI1FP1 and TI2FP2 edges depending on the level of the other input.

100: Reset Mode - Rising edge of the selected trigger input (TRGI) reinitializes the counter and generates an update of the registers.

101: Gated Mode - The counter clock is enabled when the trigger input (TRGI) is high. The counter stops (but is not reset) as soon as the trigger becomes low. Both start and stop of the counter are controlled.

110: Trigger Mode - The counter starts at a rising edge of the trigger TRGI (but it is not reset). Only the start of the counter is controlled.

111: External Clock Mode 1 - Rising edges of the selected trigger (TRGI) clock the counter.

Note: The gated mode must not be used if TI1F_ED is selected as the trigger input (TS=100). Indeed, TI1F_ED outputs 1 pulse for each transition on TI1F, whereas the gated mode checks the level of the trigger signal.

The clock of the slave timer must be enabled prior to receiving events from the master timer, and must not be changed on-the-fly while triggers are received from the master timer.

Table 98. TIMx internal trigger connection

Slave TIM	ITR0 (TS = 000)	ITR1 (TS = 001)	ITR2 (TS = 010)	ITR3 (TS = 011)
TIM2	TIM1_TRGO	TIM8_TRGO	TIM3_TRGO	TIM4_TRGO
TIM3	TIM1_TRGO	TIM2_TRGO	TIM5_TRGO	TIM4_TRGO
TIM4	TIM1_TRGO	TIM2_TRGO	TIM3_TRGO	TIM8_TRGO
TIM5	TIM2_TRGO	TIM3_TRGO	TIM4_TRGO	TIM8_TRGO

18.4.4 TIMx DMA/Interrupt enable register (TIMx_DIER)

Address offset: 0x0C

Reset value: 0x0000

15	14	13	12	11	10	9	8	7	6	5	4	3	2	1	0
Res.	TDE	Res	CC4DE	CC3DE	CC2DE	CC1DE	UDE	Res.	TIE	Res	CC4IE	CC3IE	CC2IE	CC1IE	UIE
	rw		rw	rw	rw	rw	rw		rw		rw	rw	rw	rw	rw

Bit 15 Reserved, must be kept at reset value.

Bit 14 **TDE**: Trigger DMA request enable
0: Trigger DMA request disabled.
1: Trigger DMA request enabled.

Bit 13 Reserved, always read as 0

Bit 12 **CC4DE**: Capture/Compare 4 DMA request enable
0: CC4 DMA request disabled.
1: CC4 DMA request enabled.

Bit 11 **CC3DE**: Capture/Compare 3 DMA request enable
0: CC3 DMA request disabled.
1: CC3 DMA request enabled.

Bit 10 **CC2DE**: Capture/Compare 2 DMA request enable
0: CC2 DMA request disabled.
1: CC2 DMA request enabled.

Bit 9 **CC1DE**: Capture/Compare 1 DMA request enable
0: CC1 DMA request disabled.
1: CC1 DMA request enabled.

Bit 8 **UDE**: Update DMA request enable
0: Update DMA request disabled.
1: Update DMA request enabled.

Bit 7 Reserved, must be kept at reset value.

Bit 6 **TIE**: Trigger interrupt enable
0: Trigger interrupt disabled.
1: Trigger interrupt enabled.

Bit 5 Reserved, must be kept at reset value.

Bit 4 **CC4IE**: Capture/Compare 4 interrupt enable
0: CC4 interrupt disabled.
1: CC4 interrupt enabled.

Bit 3 **CC3IE**: Capture/Compare 3 interrupt enable
0: CC3 interrupt disabled
1: CC3 interrupt enabled

Bit 2 **CC2IE**: Capture/Compare 2 interrupt enable
0: CC2 interrupt disabled
1: CC2 interrupt enabled

Bit 1 **CC1IE**: Capture/Compare 1 interrupt enable
0: CC1 interrupt disabled
1: CC1 interrupt enabled

Bit 0 **UIE**: Update interrupt enable
0: Update interrupt disabled
1: Update interrupt enabled

18.4.5 TIMx status register (TIMx_SR)

Address offset: 0x10

Reset value: 0x0000

15	14	13	12	11	10	9	8	7	6	5	4	3	2	1	0
Reserved			CC4OF	CC3OF	CC2OF	CC1OF	Reserved		TIF	Res	CC4IF	CC3IF	CC2IF	CC1IF	UIF
			rc_w0	rc_w0	rc_w0	rc_w0			rc_w0		rc_w0	rc_w0	rc_w0	rc_w0	rc_w0

Bits 15:13 Reserved, must be kept at reset value.

Bit 12 **CC4OF**: Capture/Compare 4 overcapture flag
refer to CC1OF description

Bit 11 **CC3OF**: Capture/Compare 3 overcapture flag
refer to CC1OF description

Bit 10 **CC2OF**: Capture/compare 2 overcapture flag
refer to CC1OF description

Bit 9 **CC1OF**: Capture/Compare 1 overcapture flag
This flag is set by hardware only when the corresponding channel is configured in input capture mode. It is cleared by software by writing it to ‘0.
0: No overcapture has been detected
1: The counter value has been captured in TIMx_CCR1 register while CC1IF flag was already set

Bits 8:7 Reserved, must be kept at reset value.

Bit 6 **TIF**: Trigger interrupt flag
This flag is set by hardware on trigger event (active edge detected on TRGI input when the slave mode controller is enabled in all modes but gated mode. It is set when the counter starts or stops when gated mode is selected. It is cleared by software.
0: No trigger event occurred
1: Trigger interrupt pending

Bit 5 Reserved, must be kept at reset value.

Bit 4 **CC4IF**: Capture/Compare 4 interrupt flag
refer to CC1IF description

Bit 3 **CC3IF**: Capture/Compare 3 interrupt flag
refer to CC1IF description

Bit 2 **CC2IF**: Capture/Compare 2 interrupt flag
refer to CC1IF description

Bit 1 **CC1IF**: Capture/compare 1 interrupt flag

If channel CC1 is configured as output:
This flag is set by hardware when the counter matches the compare value, with some exception in center-aligned mode (refer to the CMS bits in the TIMx_CR1 register description). It is cleared by software.
0: No match
1: The content of the counter TIMx_CNT matches the content of the TIMx_CCR1 register. When the contents of TIMx_CCR1 are greater than the contents of TIMx_ARR, the CC1IF bit goes high on the counter overflow (in upcounting and up/down-counting modes) or underflow (in downcounting mode)

If channel CC1 is configured as input:
This bit is set by hardware on a capture. It is cleared by software or by reading the TIMx_CCR1 register.
0: No input capture occurred
1: The counter value has been captured in TIMx_CCR1 register (An edge has been detected on IC1 which matches the selected polarity)

Bit 0 **UIF**: Update interrupt flag

- This bit is set by hardware on an update event. It is cleared by software.
  0: No update occurred.
  1: Update interrupt pending. This bit is set by hardware when the registers are updated:
- At overflow or underflow (for TIM2 to TIM5) and if UDIS=0 in the TIMx_CR1 register.
- When CNT is reinitialized by software using the UG bit in TIMx_EGR register, if URS=0 and UDIS=0 in the TIMx_CR1 register.

When CNT is reinitialized by a trigger event (refer to the synchro control register description), if URS=0 and UDIS=0 in the TIMx_CR1 register.

18.4.6 TIMx event generation register (TIMx_EGR)

Address offset: 0x14

Reset value: 0x0000

15	14	13	12	11	10	9	8	7	6	5	4	3	2	1	0
Reserved									TG	Res.	CC4G	CC3G	CC2G	CC1G	UG
									w		w	w	w	w	w

Bits 15:7 Reserved, must be kept at reset value.

Bit 6 **TG**: Trigger generation

This bit is set by software in order to generate an event, it is automatically cleared by hardware.
0: No action
1: The TIF flag is set in TIMx_SR register. Related interrupt or DMA transfer can occur if enabled.

Bit 5 Reserved, must be kept at reset value.

Bit 4 **CC4G**: Capture/compare 4 generation

refer to CC1G description

Bit 3 **CC3G**: Capture/compare 3 generation

refer to CC1G description

Bit 2 **CC2G**: Capture/compare 2 generation

refer to CC1G description

Bit 1 **CC1G**: Capture/compare 1 generation

This bit is set by software in order to generate an event, it is automatically cleared by hardware.
0: No action
1: A capture/compare event is generated on channel 1:
If channel CC1 is configured as output:
CC1IF flag is set, Corresponding interrupt or DMA request is sent if enabled.
If channel CC1 is configured as input:
The current value of the counter is captured in TIMx_CCR1 register. The CC1IF flag is set, the corresponding interrupt or DMA request is sent if enabled. The CC1OF flag is set if the CC1IF flag was already high.

Bit 0 **UG**: Update generation

This bit can be set by software, it is automatically cleared by hardware.
0: No action
1: Re-initialize the counter and generates an update of the registers. Note that the prescaler counter is cleared too (anyway the prescaler ratio is not affected). The counter is cleared if the center-aligned mode is selected or if DIR=0 (upcounting), else it takes the auto-reload value (TIMx_ARR) if DIR=1 (downcounting).

18.4.7 TIMx capture/compare mode register 1 (TIMx_CCMR1)

Address offset: 0x18

Reset value: 0x0000

The channels can be used in input (capture mode) or in output (compare mode). The direction of a channel is defined by configuring the corresponding CCxS bits. All the other bits of this register have a different function in input and in output mode. For a given bit, OCxx describes its function when the channel is configured in output, ICxx describes its function when the channel is configured in input. Take care that the same bit can have a different meaning for the input stage and for the output stage.

15	14	13	12	11	10	9	8	7	6	5	4	3	2	1	0
OC2CE	OC2M[2:0]			OC2PE	OC2FE	CC2S[1:0]		OC1CE	OC1M[2:0]			OC1PE	OC1FE	CC1S[1:0]	
IC2F[3:0]				IC2PSC[1:0]				IC1F[3:0]				IC1PSC[1:0]			
rw	rw	rw	rw	rw	rw	rw	rw	rw	rw	rw	rw	rw	rw	rw	rw

Output compare mode

Bit 15 **OC2CE:** Output compare 2 clear enable

Bits 14:12 **OC2M[2:0]**: Output compare 2 mode

Bit 11 **OC2PE**: Output compare 2 preload enable

Bit 10 **OC2FE**: Output compare 2 fast enable

Bits 9:8 **CC2S[1:0]**: Capture/Compare 2 selection

This bit-field defines the direction of the channel (input/output) as well as the used input.
00: CC2 channel is configured as output
01: CC2 channel is configured as input, IC2 is mapped on TI2
10: CC2 channel is configured as input, IC2 is mapped on TI1
11: CC2 channel is configured as input, IC2 is mapped on TRC. This mode is working only if an internal trigger input is selected through the TS bit (TIMx_SMCR register)

Note: CC2S bits are writable only when the channel is OFF (CC2E = 0 in TIMx_CCER).

Bit 7 **OC1CE:** Output compare 1 clear enable

OC1CE: Output Compare 1 Clear Enable
0: OC1Ref is not affected by the ETRF input
1: OC1Ref is cleared as soon as a High level is detected on ETRF input

Bits 6:4 **OC1M**: Output compare 1 mode

These bits define the behavior of the output reference signal OC1REF from which OC1 and OC1N are derived. OC1REF is active high whereas OC1 and OC1N active level depends on CC1P and CC1NP bits.
000: Frozen - The comparison between the output compare register TIMx_CCR1 and the counter TIMx_CNT has no effect on the outputs.(this mode is used to generate a timing base).
001: Set channel 1 to active level on match. OC1REF signal is forced high when the counter TIMx_CNT matches the capture/compare register 1 (TIMx_CCR1).
010: Set channel 1 to inactive level on match. OC1REF signal is forced low when the counter TIMx_CNT matches the capture/compare register 1 (TIMx_CCR1).
011: Toggle - OC1REF toggles when TIMx_CNT=TIMx_CCR1.
100: Force inactive level - OC1REF is forced low.
101: Force active level - OC1REF is forced high.
110: PWM mode 1 - In upcounting, channel 1 is active as long as TIMx_CNT<TIMx_CCR1 else inactive. In downcounting, channel 1 is inactive (OC1REF=‘0) as long as TIMx_CNT>TIMx_CCR1 else active (OC1REF=1).
111: PWM mode 2 - In upcounting, channel 1 is inactive as long as TIMx_CNT<TIMx_CCR1 else active. In downcounting, channel 1 is active as long as TIMx_CNT>TIMx_CCR1 else inactive.

Note: In PWM mode 1 or 2, the OCREF level changes only when the result of the comparison changes or when the output compare mode switches from “frozen” mode to “PWM” mode.

Bit 3 **OC1PE**: Output compare 1 preload enable

0: Preload register on TIMx_CCR1 disabled. TIMx_CCR1 can be written at anytime, the new value is taken in account immediately.
1: Preload register on TIMx_CCR1 enabled. Read/Write operations access the preload register. TIMx_CCR1 preload value is loaded in the active register at each update event.

*Note: **1:** These bits can not be modified as long as LOCK level 3 has been programmed (LOCK bits in TIMx_BDTR register) and CC1S=00 (the channel is configured in output).*

__2:__ The PWM mode can be used without validating the preload register only in one-pulse mode (OPM bit set in TIMx_CR1 register). Else the behavior is not guaranteed.

Bit 2 **OC1FE**: Output compare 1 fast enable

This bit is used to accelerate the effect of an event on the trigger in input on the CC output.
0: CC1 behaves normally depending on counter and CCR1 values even when the trigger is ON. The minimum delay to activate CC1 output when an edge occurs on the trigger input is 5 clock cycles.
1: An active edge on the trigger input acts like a compare match on CC1 output. Then, OC is set to the compare level independently from the result of the comparison. Delay to sample the trigger input and to activate CC1 output is reduced to 3 clock cycles. OCFE acts only if the channel is configured in PWM1 or PWM2 mode.

Bits 1:0 **CC1S**: Capture/Compare 1 selection

This bit-field defines the direction of the channel (input/output) as well as the used input.
00: CC1 channel is configured as output.
01: CC1 channel is configured as input, IC1 is mapped on TI1.
10: CC1 channel is configured as input, IC1 is mapped on TI2.
11: CC1 channel is configured as input, IC1 is mapped on TRC. This mode is working only if an internal trigger input is selected through TS bit (TIMx_SMCR register)

Note: CC1S bits are writable only when the channel is OFF (CC1E = 0 in TIMx_CCER).

Input capture mode

Bits 15:12 **IC2F**: Input capture 2 filter

Bits 11:10 **IC2PSC[1:0]**: Input capture 2 prescaler

Bits 9:8 **CC2S**: Capture/compare 2 selection

This bit-field defines the direction of the channel (input/output) as well as the used input.
00: CC2 channel is configured as output.
01: CC2 channel is configured as input, IC2 is mapped on TI2.
10: CC2 channel is configured as input, IC2 is mapped on TI1.
11: CC2 channel is configured as input, IC2 is mapped on TRC. This mode is working only if an internal trigger input is selected through TS bit (TIMx_SMCR register)

Note: CC2S bits are writable only when the channel is OFF (CC2E = 0 in TIMx_CCER).

Bits 7:4 **IC1F**: Input capture 1 filter

This bit-field defines the frequency used to sample TI1 input and the length of the digital filter applied to TI1. The digital filter is made of an event counter in which N consecutive events are needed to validate a transition on the output:
0000: No filter, sampling is done at f_{DTS}
0001: $f_{SAMPLING}=f_{CK_INT}$, N=2
0010: $f_{SAMPLING}=f_{CK_INT}$, N=4
0011: $f_{SAMPLING}=f_{CK_INT}$, N=8
0100: $f_{SAMPLING}=f_{DTS}/2$, N=6
0101: $f_{SAMPLING}=f_{DTS}/2$, N=8
0110: $f_{SAMPLING}=f_{DTS}/4$, N=6
0111: $f_{SAMPLING}=f_{DTS}/4$, N=8
1000: $f_{SAMPLING}=f_{DTS}/8$, N=6
1001: $f_{SAMPLING}=f_{DTS}/8$, N=8
1010: $f_{SAMPLING}=f_{DTS}/16$, N=5
1011: $f_{SAMPLING}=f_{DTS}/16$, N=6
1100: $f_{SAMPLING}=f_{DTS}/16$, N=8
1101: $f_{SAMPLING}=f_{DTS}/32$, N=5
1110: $f_{SAMPLING}=f_{DTS}/32$, N=6
1111: $f_{SAMPLING}=f_{DTS}/32$, N=8

Bits 3:2 **IC1PSC**: Input capture 1 prescaler

This bit-field defines the ratio of the prescaler acting on CC1 input (IC1).
The prescaler is reset as soon as CC1E=0 (TIMx_CCER register).
00: no prescaler, capture is done each time an edge is detected on the capture input
01: capture is done once every 2 events
10: capture is done once every 4 events
11: capture is done once every 8 events

Bits 1:0 **CC1S**: Capture/Compare 1 selection

This bit-field defines the direction of the channel (input/output) as well as the used input.
00: CC1 channel is configured as output
01: CC1 channel is configured as input, IC1 is mapped on TI1
10: CC1 channel is configured as input, IC1 is mapped on TI2
11: CC1 channel is configured as input, IC1 is mapped on TRC. This mode is working only if an internal trigger input is selected through TS bit (TIMx_SMCR register)

Note: CC1S bits are writable only when the channel is OFF (CC1E = 0 in TIMx_CCER).

18.4.8 TIMx capture/compare mode register 2 (TIMx_CCMR2)

Address offset: 0x1C

Reset value: 0x0000

Refer to the above CCMR1 register description.

15	14	13	12	11	10	9	8	7	6	5	4	3	2	1	0
OC4CE	OC4M[2:0]			OC4PE	OC4FE	CC4S[1:0]		OC3CE	OC3M[2:0]			OC3PE	OC3FE	CC3S[1:0]	
IC4F[3:0]				IC4PSC[1:0]				IC3F[3:0]				IC3PSC[1:0]			
rw	rw	rw	rw	rw	rw	rw	rw	rw	rw	rw	rw	rw	rw	rw	rw

Output compare mode

Bit 15 **OC4CE**: Output compare 4 clear enable

Bits 14:12 **OC4M**: Output compare 4 mode

Bit 11 **OC4PE**: Output compare 4 preload enable

Bit 10 **OC4FE**: Output compare 4 fast enable

Bits 9:8 **CC4S**: Capture/Compare 4 selection

This bit-field defines the direction of the channel (input/output) as well as the used input.
00: CC4 channel is configured as output
01: CC4 channel is configured as input, IC4 is mapped on TI4
10: CC4 channel is configured as input, IC4 is mapped on TI3
11: CC4 channel is configured as input, IC4 is mapped on TRC. This mode is working only if an internal trigger input is selected through TS bit (TIMx_SMCR register)

Note: CC4S bits are writable only when the channel is OFF (CC4E = 0 in TIMx_CCER).

Bit 7 **OC3CE:** Output compare 3 clear enable

Bits 6:4 **OC3M**: Output compare 3 mode

Bit 3 **OC3PE**: Output compare 3 preload enable

Bit 2 **OC3FE**: Output compare 3 fast enable

Bits 1:0 **CC3S**: Capture/Compare 3 selection

This bit-field defines the direction of the channel (input/output) as well as the used input.
00: CC3 channel is configured as output
01: CC3 channel is configured as input, IC3 is mapped on TI3
10: CC3 channel is configured as input, IC3 is mapped on TI4
11: CC3 channel is configured as input, IC3 is mapped on TRC. This mode is working only if an internal trigger input is selected through TS bit (TIMx_SMCR register)

Note: CC3S bits are writable only when the channel is OFF (CC3E = 0 in TIMx_CCER).

Input capture mode

Bits 15:12 **IC4F**: Input capture 4 filter

Bits 11:10 **IC4PSC**: Input capture 4 prescaler

Bits 9:8 **CC4S**: Capture/Compare 4 selection
This bit-field defines the direction of the channel (input/output) as well as the used input.
00: CC4 channel is configured as output
01: CC4 channel is configured as input, IC4 is mapped on TI4
10: CC4 channel is configured as input, IC4 is mapped on TI3
11: CC4 channel is configured as input, IC4 is mapped on TRC. This mode is working only if an internal trigger input is selected through TS bit (TIMx_SMCR register)

Note: CC4S bits are writable only when the channel is OFF (CC4E = 0 in TIMx_CCER).

Bits 7:4 **IC3F**: Input capture 3 filter

Bits 3:2 **IC3PSC**: Input capture 3 prescaler

Bits 1:0 **CC3S**: Capture/Compare 3 selection
This bit-field defines the direction of the channel (input/output) as well as the used input.
00: CC3 channel is configured as output
01: CC3 channel is configured as input, IC3 is mapped on TI3
10: CC3 channel is configured as input, IC3 is mapped on TI4
11: CC3 channel is configured as input, IC3 is mapped on TRC. This mode is working only if an internal trigger input is selected through TS bit (TIMx_SMCR register)

Note: CC3S bits are writable only when the channel is OFF (CC3E = 0 in TIMx_CCER).

18.4.9 TIMx capture/compare enable register (TIMx_CCER)

Address offset: 0x20

Reset value: 0x0000

15	14	13	12	11	10	9	8	7	6	5	4	3	2	1	0
CC4NP	Res.	CC4P	CC4E	CC3NP	Res.	CC3P	CC3E	CC2NP	Res.	CC2P	CC2E	CC1NP	Res.	CC1P	CC1E
rw		rw	rw	rw		rw	rw	rw		rw	rw	rw		rw	rw

Bit 15 **CC4NP**: *Capture/Compare 4 output Polarity.*
Refer to CC1NP description

Bit 14 Reserved, must be kept at reset value.

Bit 13 **CC4P**: *Capture/Compare 4 output Polarity.*
refer to CC1P description

Bit 12 **CC4E**: *Capture/Compare 4 output enable.*
refer to CC1E description

Bit 11 **CC3NP**: *Capture/Compare 3 output Polarity.*
refer to CC1NP description

Bit 10 Reserved, must be kept at reset value.

Bit 9 **CC3P**: *Capture/Compare 3 output Polarity.*
refer to CC1P description

Bit 8 **CC3E**: *Capture/Compare 3 output enable.*
refer to CC1E description

Bit 7 **CC2NP**: *Capture/Compare 2 output Polarity.*
refer to CC1NP description

Bit 6 Reserved, must be kept at reset value.

Bit 5 **CC2P**: *Capture/Compare 2 output Polarity.*
refer to CC1P description

Bit 4 **CC2E**: *Capture/Compare 2 output enable.*
refer to CC1E description

Bit 3 **CC1NP**: *Capture/Compare 1 output Polarity.*
CC1 channel configured as output:
CC1NP must be kept cleared in this case.
CC1 channel configured as input:
This bit is used in conjunction with CC1P to define TI1FP1/TI2FP1 polarity. refer to CC1P description.

Bit 2 Reserved, must be kept at reset value.

Bit 1 **CC1P**: *Capture/Compare 1 output Polarity.*
CC1 channel configured as output:
0: OC1 active high
1: OC1 active low
CC1 channel configured as input:
CC1NP/CC1P bits select TI1FP1 and TI2FP1 polarity for trigger or capture operations.
00: noninverted/rising edge
Circuit is sensitive to TIxFP1 rising edge (capture, trigger in reset, external clock or trigger mode), TIxFP1 is not inverted (trigger in gated mode, encoder mode).
01: inverted/falling edge
Circuit is sensitive to TIxFP1 falling edge (capture, trigger in reset, external clock or trigger mode), TIxFP1 is inverted (trigger in gated mode, encoder mode).
10: reserved, do not use this configuration.
11: noninverted/both edges
Circuit is sensitive to both TIxFP1 rising and falling edges (capture, trigger in reset, external clock or trigger mode), TIxFP1 is not inverted (trigger in gated mode). This configuration must not be used for encoder mode.

Bit 0 **CC1E**: *Capture/Compare 1 output enable.*
CC1 channel configured as output:
0: Off - OC1 is not active
1: On - OC1 signal is output on the corresponding output pin
CC1 channel configured as input:
This bit determines if a capture of the counter value can actually be done into the input capture/compare register 1 (TIMx_CCR1) or not.
0: Capture disabled
1: Capture enabled

Table 99. Output control bit for standard OCx channels

CCxE bit	OCx output state
0	Output Disabled (OCx=0, OCx_EN=0)
1	OCx=OCxREF + Polarity, OCx_EN=1

Note: The state of the external IO pins connected to the standard OCx channels depends on the OCx channel state and the GPIO registers.

18.4.10 TIMx counter (TIMx_CNT)

Address offset: 0x24

Reset value: 0x0000 0000

31	30	29	28	27	26	25	24	23	22	21	20	19	18	17	16
CNT[31:16] (depending on timers)															
rw	rw	rw	rw	rw	rw	rw	rw	rw	rw	rw	rw	rw	rw	rw	rw
15	14	13	12	11	10	9	8	7	6	5	4	3	2	1	0
CNT[15:0]															
rw	rw	rw	rw	rw	rw	rw	rw	rw	rw	rw	rw	rw	rw	rw	rw

Bits 31:16 **CNT[31:16]**: *High counter value (on TIM2 and TIM5).*

Bits 15:0 **CNT[15:0]**: Counter value

18.4.11 TIMx prescaler (TIMx_PSC)

Address offset: 0x28

Reset value: 0x0000

15	14	13	12	11	10	9	8	7	6	5	4	3	2	1	0
PSC[15:0]															
rw	rw	rw	rw	rw	rw	rw	rw	rw	rw	rw	rw	rw	rw	rw	rw

Bits 15:0 **PSC[15:0]**: Prescaler value

The counter clock frequency CK_CNT is equal to f_{CK_PSC} / (PSC[15:0] + 1).
PSC contains the value to be loaded in the active prescaler register at each update event (including when the counter is cleared through UG bit of TIMx_EGR register or through trigger controller when configured in “reset mode”).

18.4.12 TIMx auto-reload register (TIMx_ARR)

Address offset: 0x2C

Reset value: 0xFFFF FFFF

31	30	29	28	27	26	25	24	23	22	21	20	19	18	17	16
ARR[31:16] (depending on timers)															
rw	rw	rw	rw	rw	rw	rw	rw	rw	rw	rw	rw	rw	rw	rw	rw
15	14	13	12	11	10	9	8	7	6	5	4	3	2	1	0
ARR[15:0]															
rw	rw	rw	rw	rw	rw	rw	rw	rw	rw	rw	rw	rw	rw	rw	rw

Bits 31:16 **ARR[31:16]**: High auto-reload value (on TIM2 and TIM5).

Bits 15:0 **ARR[15:0]**: Auto-reload value
ARR is the value to be loaded in the actual auto-reload register.
Refer to the *Section 18.3.1: Time-base unit* for more details about ARR update and behavior.
The counter is blocked while the auto-reload value is null.

18.4.13 TIMx capture/compare register 1 (TIMx_CCR1)

Address offset: 0x34

Reset value: 0x0000 0000

31	30	29	28	27	26	25	24	23	22	21	20	19	18	17	16
CCR1[31:16] (depending on timers)															
rw/ro	rw/ro	rw/ro	rw/ro	rw/ro	rw/ro	rw/ro	rw/ro	rw/ro	rw/ro	rw/ro	rw/ro	rw/ro	rw/ro	rw/ro	rw/ro

15	14	13	12	11	10	9	8	7	6	5	4	3	2	1	0
CCR1[15:0]															
rw/ro	rw/ro	rw/ro	rw/ro	rw/ro	rw/ro	rw/ro	rw/ro	rw/ro	rw/ro	rw/ro	rw/ro	rw/ro	rw/ro	rw/ro	rw/ro

Bits 31:16 **CCR1[31:16]**: High Capture/Compare 1 value (on TIM2 and TIM5).

Bits 15:0 **CCR1[15:0]**: Low Capture/Compare 1 value

If channel CC1 is configured as output:
CCR1 is the value to be loaded in the actual capture/compare 1 register (preload value).
It is loaded permanently if the preload feature is not selected in the TIMx_CCMR1 register (bit OC1PE). Else the preload value is copied in the active capture/compare 1 register when an update event occurs.
The active capture/compare register contains the value to be compared to the counter TIMx_CNT and signaled on OC1 output.

If channel CC1is configured as input:
CCR1 is the counter value transferred by the last input capture 1 event (IC1). The TIMx_CCR1 register is read-only and cannot be programmed.

18.4.14 TIMx capture/compare register 2 (TIMx_CCR2)

Address offset: 0x38

Reset value: 0x0000 0000

31	30	29	28	27	26	25	24	23	22	21	20	19	18	17	16
CCR2[31:16] (depending on timers)															
rw/ro	rw/ro	rw/ro	rw/ro	rw/ro	rw/ro	rw/ro	rw/ro	rw/ro	rw/ro	rw/ro	rw/ro	rw/ro	rw/ro	rw/ro	rw/ro

15	14	13	12	11	10	9	8	7	6	5	4	3	2	1	0
CCR2[15:0]															
rw/ro	rw/ro	rw/ro	rw/ro	rw/ro	rw/ro	rw/ro	rw/ro	rw/ro	rw/ro	rw/ro	rw/ro	rw/ro	rw/ro	rw/ro	rw/ro

Bits 31:16 **CCR2[31:16]**: High Capture/Compare 2 value (on TIM2 and TIM5).

Bits 15:0 **CCR2[15:0]**: Low Capture/Compare 2 value

If channel CC2 is configured as output:
CCR2 is the value to be loaded in the actual capture/compare 2 register (preload value).
It is loaded permanently if the preload feature is not selected in the TIMx_CCMR register (bit OC2PE). Else the preload value is copied in the active capture/compare 2 register when an update event occurs.
The active capture/compare register contains the value to be compared to the counter TIMx_CNT and signalled on OC2 output.
If channel CC2 is configured as input:
CCR2 is the counter value transferred by the last input capture 2 event (IC2). The TIMx_CCR2 register is read-only and cannot be programmed.

18.4.15 TIMx capture/compare register 3 (TIMx_CCR3)

Address offset: 0x3C

Reset value: 0x0000 0000

31	30	29	28	27	26	25	24	23	22	21	20	19	18	17	16
CCR3[31:16] (depending on timers)															
rw/ro	rw/ro	rw/ro	rw/ro	rw/ro	rw/ro	rw/ro	rw/ro	rw/ro	rw/ro	rw/ro	rw/ro	rw/ro	rw/ro	rw/ro	rw/ro

15	14	13	12	11	10	9	8	7	6	5	4	3	2	1	0
CCR3[15:0]															
rw/ro	rw/ro	rw/ro	rw/ro	rw/ro	rw/ro	rw/ro	rw/ro	rw/ro	rw/ro	rw/ro	rw/ro	rw/ro	rw/ro	rw/ro	rw/ro

Bits 31:16 **CCR3[31:16]**: High Capture/Compare 3 value (on TIM2 and TIM5).

Bits 15:0 **CCR3[15:0]**: Low Capture/Compare value

If channel CC3 is configured as output:
CCR3 is the value to be loaded in the actual capture/compare 3 register (preload value).
It is loaded permanently if the preload feature is not selected in the TIMx_CCMR register (bit OC3PE). Else the preload value is copied in the active capture/compare 3 register when an update event occurs.
The active capture/compare register contains the value to be compared to the counter TIMx_CNT and signaled on OC3 output.
If channel CC3 is configured as input:
CCR3 is the counter value transferred by the last input capture 3 event (IC3). The TIMx_CCR3 register is read-only and cannot be programmed.

18.4.16 TIMx capture/compare register 4 (TIMx_CCR4)

Address offset: 0x40

Reset value: 0x0000 0000

31	30	29	28	27	26	25	24	23	22	21	20	19	18	17	16
CCR4[31:16] (depending on timers)															
rw/ro	rw/ro	rw/ro	rw/ro	rw/ro	rw/ro	rw/ro	rw/ro	rw/ro	rw/ro	rw/ro	rw/ro	rw/ro	rw/ro	rw/ro	rw/ro

15	14	13	12	11	10	9	8	7	6	5	4	3	2	1	0
CCR4[15:0]															
rw/ro	rw/ro	rw/ro	rw/ro	rw/ro	rw/ro	rw/ro	rw/ro	rw/ro	rw/ro	rw/ro	rw/ro	rw/ro	rw/ro	rw/ro	rw/ro

Bits 31:16 **CCR4[31:16]**: High Capture/Compare 4 value (on TIM2 and TIM5).

Bits 15:0 **CCR4[15:0]**: Low Capture/Compare value

1. if CC4 channel is configured as output (CC4S bits):
   CCR4 is the value to be loaded in the actual capture/compare 4 register (preload value). It is loaded permanently if the preload feature is not selected in the TIMx_CCMR register (bit OC4PE). Else the preload value is copied in the active capture/compare 4 register when an update event occurs.
   The active capture/compare register contains the value to be compared to the counter TIMx_CNT and signalled on OC4 output.
2. if CC4 channel is configured as input (CC4S bits in TIMx_CCMR4 register):
   CCR4 is the counter value transferred by the last input capture 4 event (IC4). The TIMx_CCR4 register is read-only and cannot be programmed.

18.4.17 TIMx DMA control register (TIMx_DCR)

Address offset: 0x48

Reset value: 0x0000

15	14	13	12	11	10	9	8	7	6	5	4	3	2	1	0
Reserved			DBL[4:0]					Reserved			DBA[4:0]				
			rw	rw	rw	rw	rw				rw	rw	rw	rw	rw

Bits 15:13 Reserved, must be kept at reset value.

Bits 12:8 **DBL[4:0]**: DMA burst length

This 5-bit vector defines the number of DMA transfers (the timer recognizes a burst transfer when a read or a write access is done to the TIMx_DMAR address).
00000: 1 transfer,
00001: 2 transfers,
00010: 3 transfers,
...
10001: 18 transfers.

Bits 7:5 Reserved, must be kept at reset value.

Bits 4:0 **DBA[4:0]**: DMA base address

This 5-bit vector defines the base-address for DMA transfers (when read/write access are done through the TIMx_DMAR address). DBA is defined as an offset starting from the address of the TIMx_CR1 register.
Example:
00000: TIMx_CR1,
00001: TIMx_CR2,
00010: TIMx_SMCR,
...

Example: Let us consider the following transfer: DBL = 7 transfers & DBA = TIMx_CR1. In this case the transfer is done to/from 7 registers starting from the TIMx_CR1 address.

18.4.18 TIMx DMA address for full transfer (TIMx_DMAR)

Address offset: 0x4C

Reset value: 0x0000

15	14	13	12	11	10	9	8	7	6	5	4	3	2	1	0
DMAB[15:0]															
rw	rw	rw	rw	rw	rw	rw	rw	rw	rw	rw	rw	rw	rw	rw	rw

Bits 15:0 **DMAB[15:0]**: DMA register for burst accesses

A read or write operation to the DMAR register accesses the register located at the address

(TIMx_CR1 address) + (DBA + DMA index) x 4

where TIMx_CR1 address is the address of the control register 1, DBA is the DMA base address configured in TIMx_DCR register, DMA index is automatically controlled by the DMA transfer, and ranges from 0 to DBL (DBL configured in TIMx_DCR).

Example of how to use the DMA burst feature

In this example the timer DMA burst feature is used to update the contents of the CCRx registers (x = 2, 3, 4) with the DMA transferring half words into the CCRx registers.

This is done in the following steps:

1. Configure the corresponding DMA channel as follows:
   - DMA channel peripheral address is the DMAR register address
   - DMA channel memory address is the address of the buffer in the RAM containing the data to be transferred by DMA into CCRx registers.
   - Number of data to transfer = 3 (See note below).
   - Circular mode disabled.
2. Configure the DCR register by configuring the DBA and DBL bit fields as follows: DBL = 3 transfers, DBA = 0xE.
3. Enable the TIMx update DMA request (set the UDE bit in the DIER register).
4. Enable TIMx
5. Enable the DMA channel

Note: This example is for the case where every CCRx register to be updated once. If every CCRx register is to be updated twice for example, the number of data to transfer should be 6. Let's take the example of a buffer in the RAM containing data1, data2, data3, data4, data5 and data6. The data is transferred to the CCRx registers as follows: on the first update DMA request, data1 is transferred to CCR2, data2 is transferred to CCR3, data3 is transferred to CCR4 and on the second update DMA request, data4 is transferred to CCR2, data5 is transferred to CCR3 and data6 is transferred to CCR4.

18.4.19 TIM2 option register (TIM2_OR)

Address offset: 0x50

Reset value: 0x0000

15	14	13	12	11	10	9	8	7	6	5	4	3	2	1	0
Reserved				ITR1_RMP		Reserved									
				rw	rw										

Bits 15:12 Reserved, must be kept at reset value.

Bits 11:10 **ITR1_RMP:** Internal trigger 1 remap
Set and cleared by software.
00: TIM8_TRGOUT
01: PTP trigger output is connected to TIM2_ITR1
10: OTG FS SOF is connected to the TIM2_ITR1 input
11: OTG HS SOF is connected to the TIM2_ITR1 input

Bits 9:0 Reserved, must be kept at reset value.

18.4.20 TIM5 option register (TIM5_OR)

Address offset: 0x50

Reset value: 0x0000

15	14	13	12	11	10	9	8	7	6	5	4	3	2	1	0
Reserved								TI4_RMP		Reserved					
								rw	rw						

Bits 15:8 Reserved, must be kept at reset value.

Bits 7:6 **TI4_RMP:** Timer Input 4 remap
Set and cleared by software.
00: TIM5 Channel4 is connected to the GPIO: Refer to the Alternate function mapping table in the datasheets.
01: the LSI internal clock is connected to the TIM5_CH4 input for calibration purposes
10: the LSE internal clock is connected to the TIM5_CH4 input for calibration purposes
11: the RTC wakeup interrupt is connected to TIM5_CH4 input for calibration purposes. Wakeup interrupt should be enabled.

Bits 5:0 Reserved, must be kept at reset value.

18.4.21 TIMx register map

TIMx registers are mapped as described in the table below:

Table 100. TIM2 to TIM5 register map and reset values

Offset	Register	31	30	29	28	27	26	25	24	23	22	21	20	19	18	17	16	15	14	13	12	11	10	9	8	7	6	5	4	3	2	1	0
0x00	**TIMx_CR1**	Reserved																						CKD [1:0]		ARPE	CMS [1:0]		DIR	OPM	URS	UDIS	CEN
	Reset value																							0	0	0	0	0	0	0	0	0	0
0x04	**TIMx_CR2**	Reserved																								TI1S	MMS[2:0]			CCDS	Reserved		
	Reset value																									0	0	0	0	0			
0x08	**TIMx_SMCR**	Reserved																ETP	ECE	ETPS [1:0]		ETF[3:0]				MSM	TS[2:0]			Reserved	SMS[2:0]		
	Reset value																	0	0	0	0	0	0	0	0	0	0	0	0		0	0	0
0x0C	**TIMx_DIER**	Reserved																	TDE	COMDE	CC4DE	CC3DE	CC2DE	CC1DE	UDE	Reserved	TIE	Reserved	CC4IE	CC3IE	CC2IE	CC1IE	UIE
	Reset value																		0	0	0	0	0	0	0		0		0	0	0	0	0
0x10	**TIMx_SR**	Reserved																			CC4OF	CC3OF	CC2OF	CC1OF	Reserved		TIF	Reserved	CC4IF	CC3IF	CC2IF	CC1IF	UIF
	Reset value																				0	0	0	0			0		0	0	0	0	0
0x14	**TIMx_EGR**	Reserved																									TG	Reserved	CC4G	CC3G	CC2G	CC1G	UG
	Reset value																										0		0	0	0	0	0
0x18	**TIMx_CCMR1** Output Compare mode	Reserved																OC2CE	OC2M [2:0]			OC2PE	OC2FE	CC2S [1:0]		OC1CE	OC1M [2:0]			OC1PE	OC1FE	CC1S [1:0]	
	Reset value																	0	0	0	0	0	0	0	0	0	0	0	0	0	0	0	0
	TIMx_CCMR1 Input Capture mode	Reserved																IC2F[3:0]				IC2 PSC [1:0]		CC2S [1:0]		IC1F[3:0]				IC1 PSC [1:0]		CC1S [1:0]	
	Reset value																	0	0	0	0	0	0	0	0	0	0	0	0	0	0	0	0
0x1C	**TIMx_CCMR2** Output Compare mode	Reserved																O24CE	OC4M [2:0]			OC4PE	OC4FE	CC4S [1:0]		OC3CE	OC3M [2:0]			OC3PE	OC3FE	CC3S [1:0]	
	Reset value																	0	0	0	0	0	0	0	0	0	0	0	0	0	0	0	0
	TIMx_CCMR2 Input Capture mode	Reserved																IC4F[3:0]				IC4 PSC [1:0]		CC4S [1:0]		IC3F[3:0]				IC3 PSC [1:0]		CC3S [1:0]	
	Reset value																	0	0	0	0	0	0	0	0	0	0	0	0	0	0	0	0
0x20	**TIMx_CCER**	Reserved																CC4NP	Reserved	CC4P	CC4E	CC3NP	Reserved	CC3P	CC3E	CC2NP	Reserved	CC2P	CC2E	CC1NP	Reserved	CC1P	CC1E
	Reset value																	0		0	0	0		0	0	0		0	0	0		0	0
0x24	**TIMx_CNT**	CNT[31:16] (TIM2 and TIM5 only, reserved on the other timers)																CNT[15:0]															
	Reset value	0	0	0	0	0	0	0	0	0	0	0	0	0	0	0	0	0	0	0	0	0	0	0	0	0	0	0	0	0	0	0	0
0x28	**TIMx_PSC**	Reserved																PSC[15:0]															
	Reset value																	0	0	0	0	0	0	0	0	0	0	0	0	0	0	0	0

Table 100. TIM2 to TIM5 register map and reset values (continued)

Offset	Register	31	30	29	28	27	26	25	24	23	22	21	20	19	18	17	16	15	14	13	12	11	10	9	8	7	6	5	4	3	2	1	0
0x2C	**TIMx_ARR**	ARR[31:16] (TIM2 and TIM5 only, reserved on the other timers)																ARR[15:0]															
	Reset value	1	1	1	1	1	1	1	1	1	1	1	1	1	1	1	1	1	1	1	1	1	1	1	1	1	1	1	1	1	1	1	1
0x30	Reserved																																
0x34	**TIMx_CCR1**	CCR1[31:16] (TIM2 and TIM5 only, reserved on the other timers)																CCR1[15:0]															
	Reset value	0	0	0	0	0	0	0	0	0	0	0	0	0	0	0	0	0	0	0	0	0	0	0	0	0	0	0	0	0	0	0	0
0x38	**TIMx_CCR2**	CCR2[31:16] (TIM2 and TIM5 only, reserved on the other timers)																CCR2[15:0]															
	Reset value	0	0	0	0	0	0	0	0	0	0	0	0	0	0	0	0	0	0	0	0	0	0	0	0	0	0	0	0	0	0	0	0
0x3C	**TIMx_CCR3**	CCR3[31:16] (TIM2 and TIM5 only, reserved on the other timers)																CCR3[15:0]															
	Reset value	0	0	0	0	0	0	0	0	0	0	0	0	0	0	0	0	0	0	0	0	0	0	0	0	0	0	0	0	0	0	0	0
0x40	**TIMx_CCR4**	CCR4[31:16] (TIM2 and TIM5 only, reserved on the other timers)																CCR4[15:0]															
	Reset value	0	0	0	0	0	0	0	0	0	0	0	0	0	0	0	0	0	0	0	0	0	0	0	0	0	0	0	0	0	0	0	0
0x44	Reserved																																
0x48	**TIMx_DCR**	Reserved																			DBL[4:0]					Reserved		DBA[4:0]					
	Reset value																				0	0	0	0	0			0	0	0	0	0
0x4C	**TIMx_DMAR**	Reserved																DMAB[15:0]															
	Reset value																	0	0	0	0	0	0	0	0	0	0	0	0	0	0	0	0
0x50	**TIM2_OR**	Reserved																Reserved				ITR1_RMP		Reserved									
	Reset value																					0	0										
0x50	**TIM5_OR**	Reserved																Reserved								IT4_RMP		Reserved					
	Reset value																									0	0						

Refer to *Section 2.3: Memory map* for the register boundary addresses.

19 General-purpose timers (TIM9 to TIM14)

This section applies to the whole STM32F4xx family, unless otherwise specified.

19.1 TIM9 to TIM14 introduction

The TIM9 to TIM14 general-purpose timers consist of a 16-bit auto-reload counter driven by a programmable prescaler.

They may be used for a variety of purposes, including measuring the pulse lengths of input signals (input capture) or generating output waveforms (output compare, PWM).

Pulse lengths and waveform periods can be modulated from a few microseconds to several milliseconds using the timer prescaler and the RCC clock controller prescalers.

The TIM9 to TIM14 timers are completely independent, and do not share any resources. They can be synchronized together as described in *Section 19.3.12*.

19.2 TIM9 to TIM14 main features

19.2.1 TIM9/TIM12 main features

The features of the TIM9 to TIM14 general-purpose timers include:

- 16-bit auto-reload upcounter
- 16-bit programmable prescaler used to divide the counter clock frequency by any factor between 1 and 65536 (can be changed “on the fly”)
- Up to 2 independent channels for:
  - Input capture
  - Output compare
  - PWM generation (edge-aligned mode)
  - One-pulse mode output
- Synchronization circuit to control the timer with external signals and to interconnect several timers together
- Interrupt generation on the following events:
  - Update: counter overflow, counter initialization (by software or internal trigger)
  - Trigger event (counter start, stop, initialization or count by internal trigger)
  - Input capture
  - Output compare

Figure 180. General-purpose timer block diagram (TIM9 and TIM12)

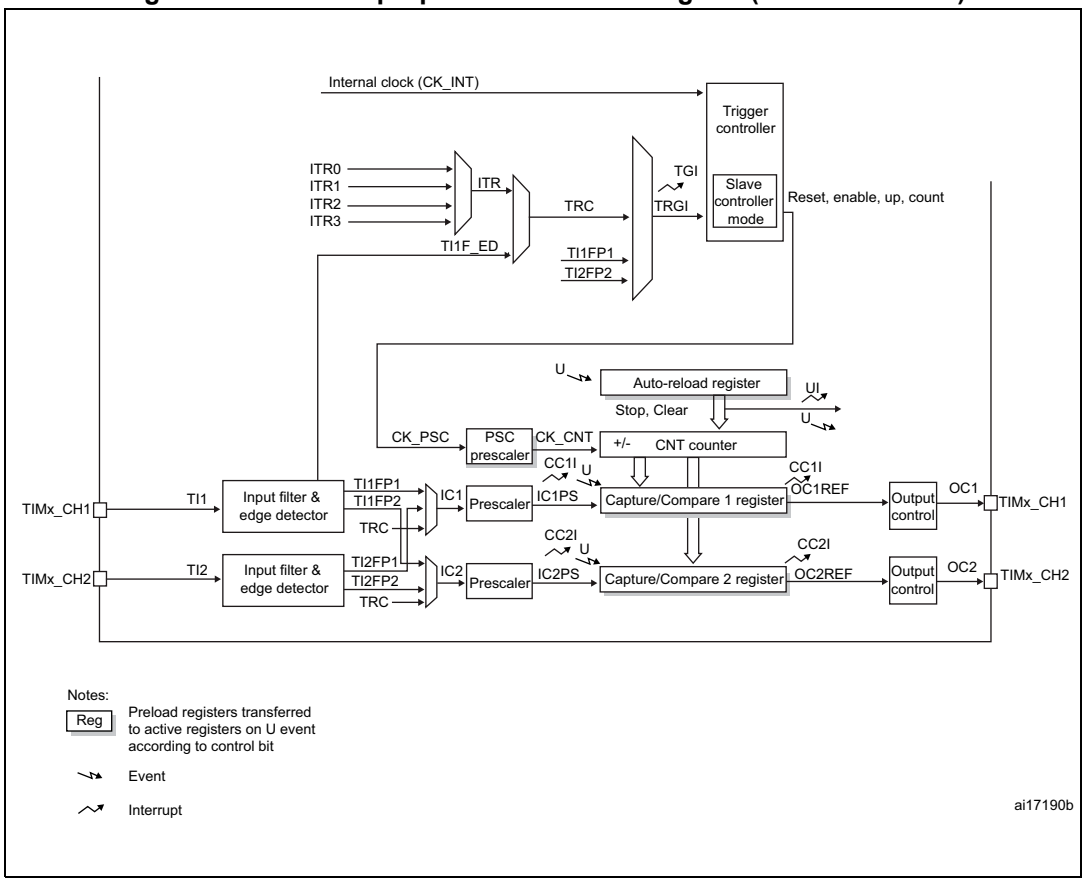

19.2.2 TIM10/TIM11 and TIM13/TIM14 main features

The features of general-purpose timers TIM10/TIM11 and TIM13/TIM14 include:

- 16-bit auto-reload upcounter
- 16-bit programmable prescaler used to divide the counter clock frequency by any factor between 1 and 65536 (can be changed “on the fly”)
- independent channel for:
  - Input capture
  - Output compare
  - PWM generation (edge-aligned mode)
  - One-pulse mode output
- Interrupt generation on the following events:
  - Update: counter overflow, counter initialization (by software)
  - Input capture
  - Output compare

Figure 181. General-purpose timer block diagram (TIM10/11/13/14)

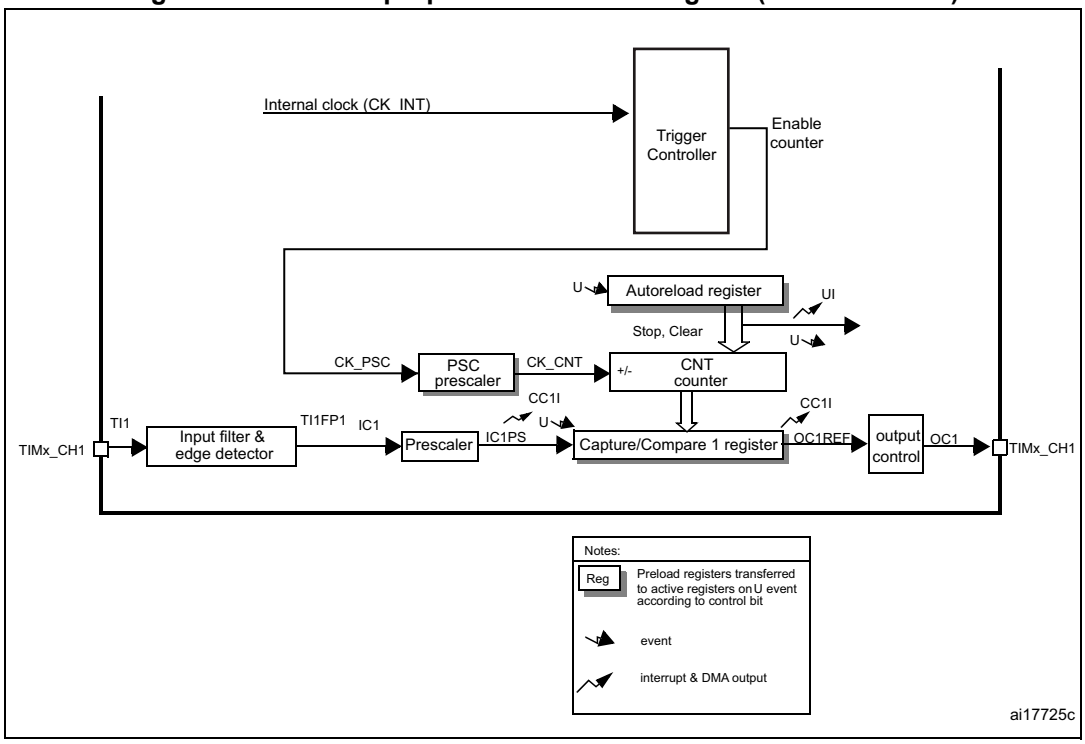

19.3 TIM9 to TIM14 functional description

19.3.1 Time-base unit

The main block of the timer is a 16-bit counter with its related auto-reload register. The counters counts up.

The counter clock can be divided by a prescaler.

The counter, the auto-reload register and the prescaler register can be written or read by software. This is true even when the counter is running.

The time-base unit includes:

- Counter register (TIMx_CNT)
- Prescaler register (TIMx_PSC)
- Auto-reload register (TIMx_ARR)

The auto-reload register is preloaded. Writing to or reading from the auto-reload register accesses the preload register. The content of the preload register are transferred into the shadow register permanently or at each update event (UEV), depending on the auto-reload preload enable bit (ARPE) in TIMx_CR1 register. The update event is sent when the counter reaches the overflow and if the UDIS bit equals 0 in the TIMx_CR1 register. It can also be generated by software. The generation of the update event is described in details for each configuration.

The counter is clocked by the prescaler output CK_CNT, which is enabled only when the counter enable bit (CEN) in TIMx_CR1 register is set (refer also to the slave mode controller description to get more details on counter enabling).

Note that the counter starts counting 1 clock cycle after setting the CEN bit in the TIMx_CR1 register.

Prescaler description

The prescaler can divide the counter clock frequency by any factor between 1 and 65536. It is based on a 16-bit counter controlled through a 16-bit register (in the TIMx_PSC register). It can be changed on the fly as this control register is buffered. The new prescaler ratio is taken into account at the next update event.

Figure 182 and *Figure 183* give some examples of the counter behavior when the prescaler ratio is changed on the fly.

Figure 182. Counter timing diagram with prescaler division change from 1 to 2

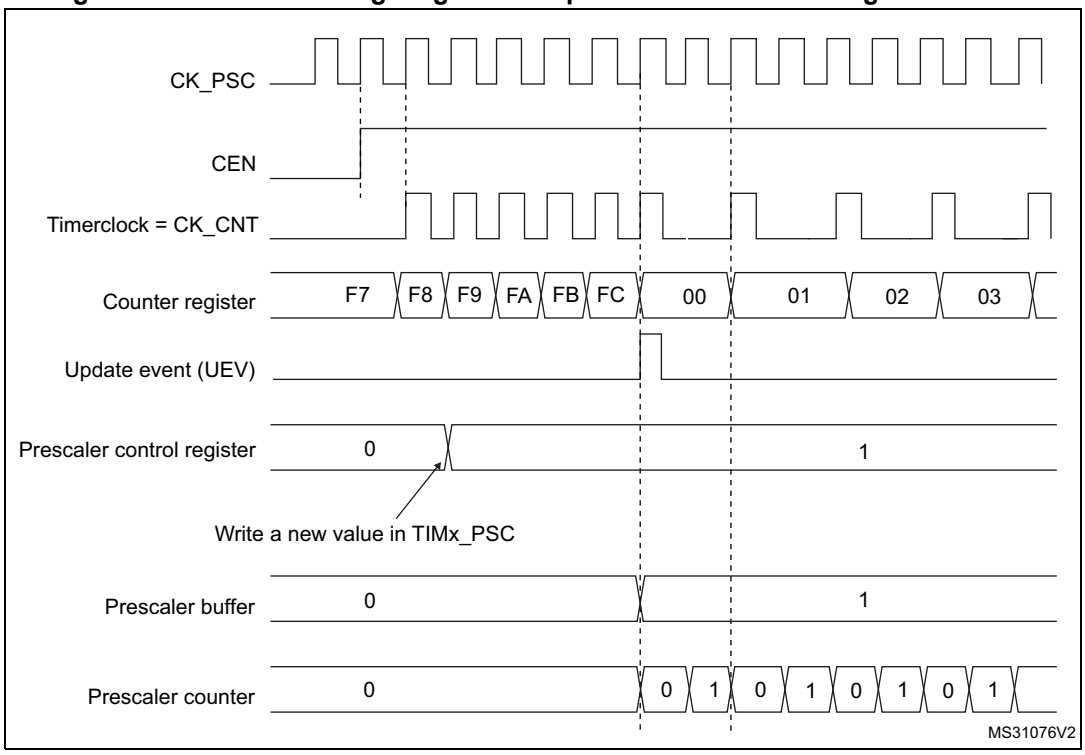

Figure 183. Counter timing diagram with prescaler division change from 1 to 4

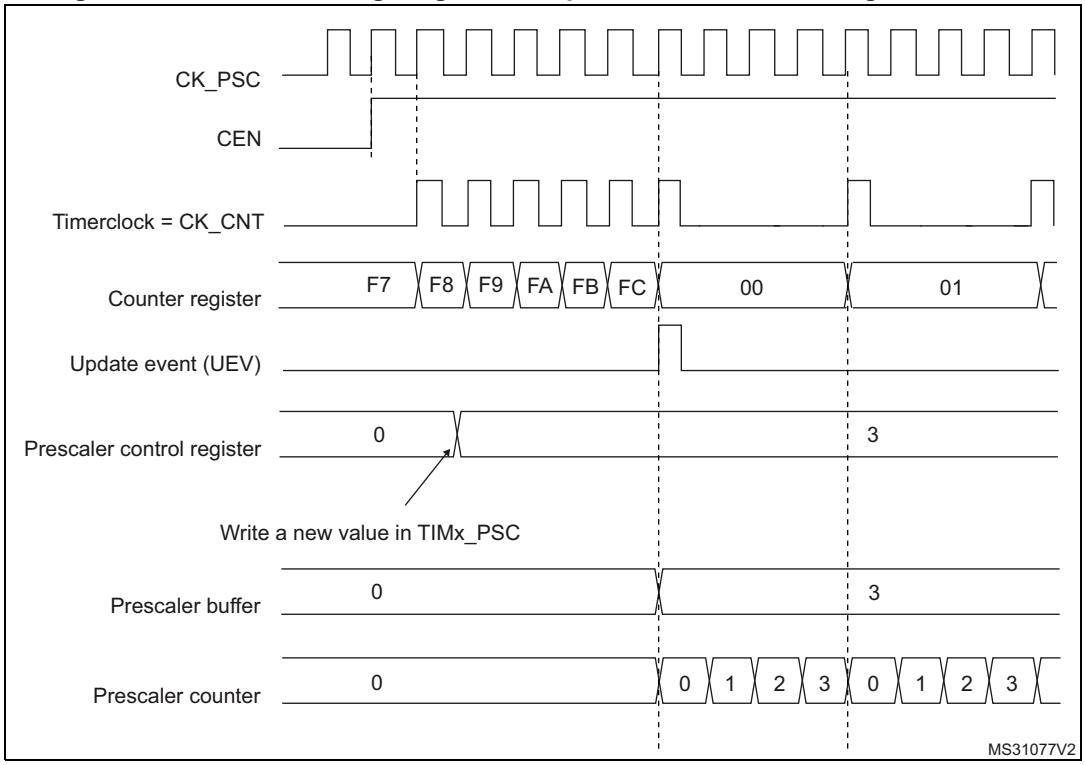

19.3.2 Counter modes

Upcounting mode

In upcounting mode, the counter counts from 0 to the auto-reload value (content of the TIMx_ARR register), then restarts from 0 and generates a counter overflow event.

Setting the UG bit in the TIMx_EGR register (by software or by using the slave mode controller on TIM9 and TIM12) also generates an update event.

The UEV event can be disabled by software by setting the UDIS bit in the TIMx_CR1 register. This is to avoid updating the shadow registers while writing new values in the preload registers. Then no update event occurs until the UDIS bit has been written to 0. However, the counter restarts from 0, as well as the counter of the prescaler (but the prescale rate does not change). In addition, if the URS bit (update request selection) in TIMx_CR1 register is set, setting the UG bit generates an update event UEV but without setting the UIF flag (thus no interrupt is sent). This is to avoid generating both update and capture interrupts when clearing the counter on the capture event.

When an update event occurs, all the registers are updated and the update flag (UIF bit in TIMx_SR register) is set (depending on the URS bit):

- The auto-reload shadow register is updated with the preload value (TIMx_ARR),
- The buffer of the prescaler is reloaded with the preload value (content of the TIMx_PSC register).

The following figures show some examples of the counter behavior for different clock frequencies when TIMx_ARR=0x36.

Figure 184. Counter timing diagram, internal clock divided by 1

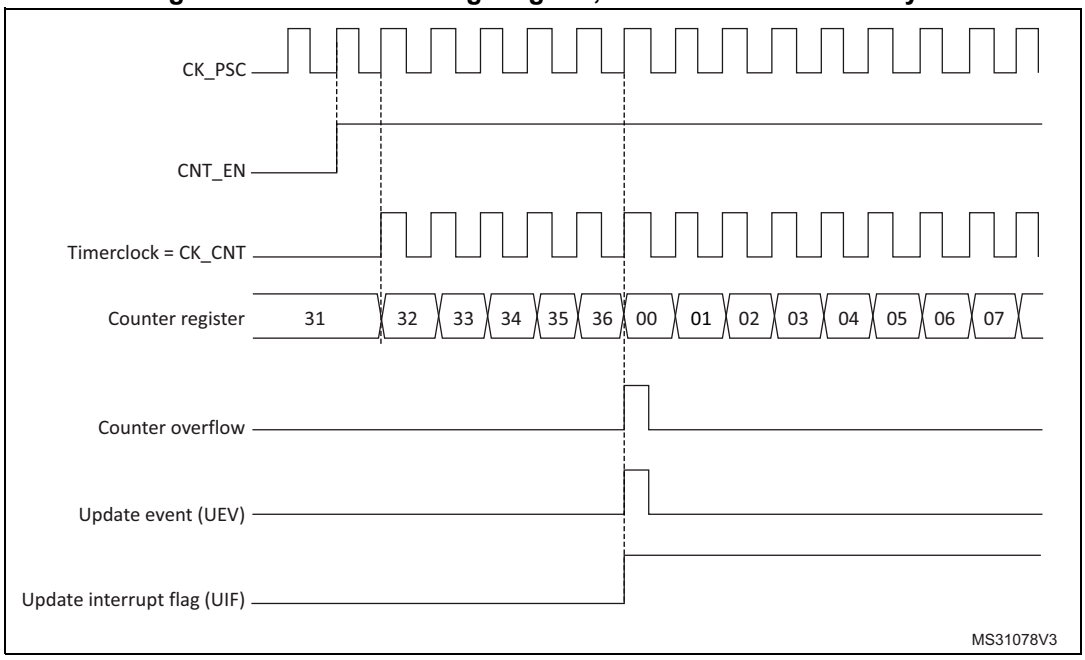

Figure 185. Counter timing diagram, internal clock divided by 2

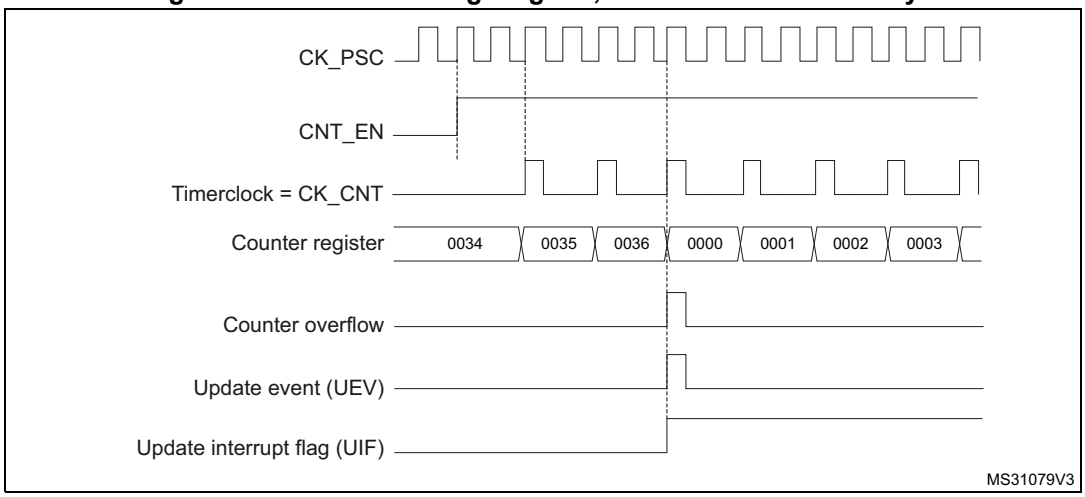

Figure 186. Counter timing diagram, internal clock divided by 4

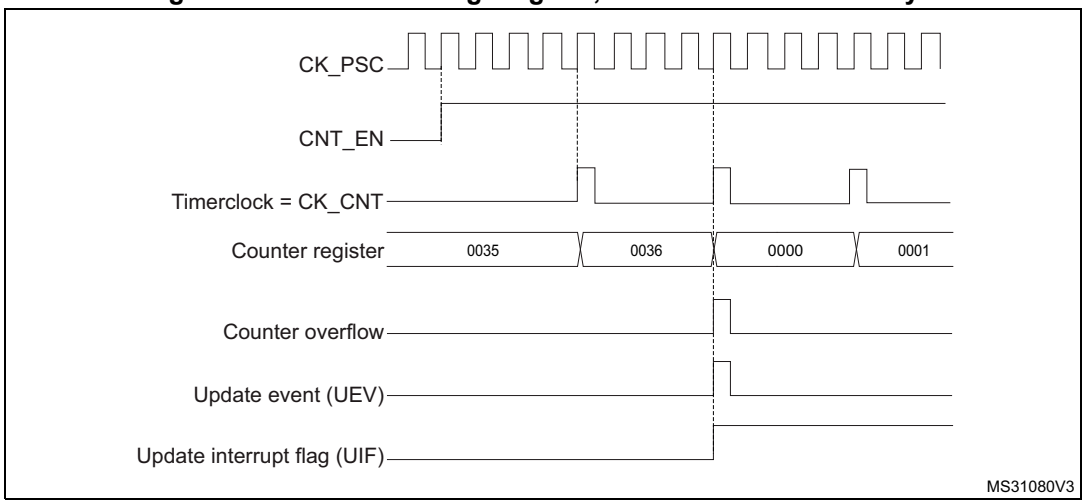

Figure 187. Counter timing diagram, internal clock divided by N

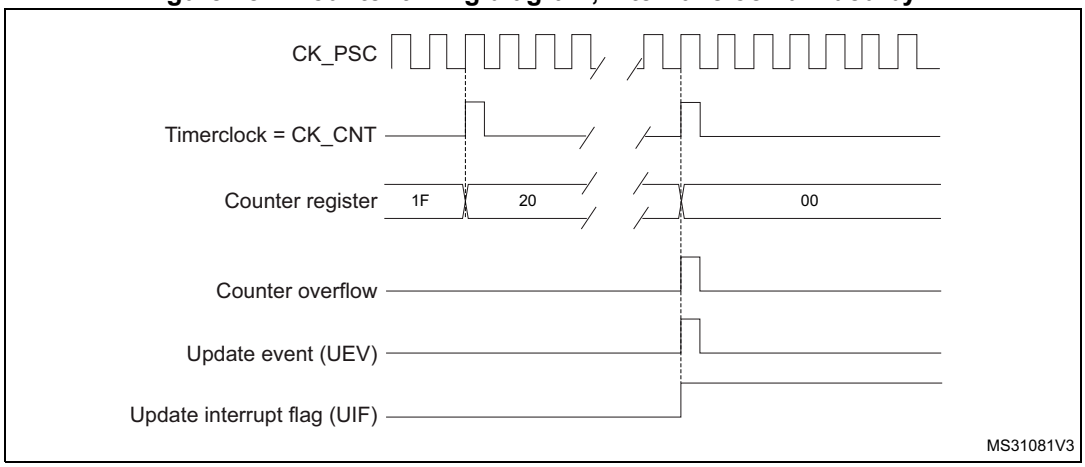

Figure 188. Counter timing diagram, update event when ARPE=0 (TIMx_ARR not preloaded)

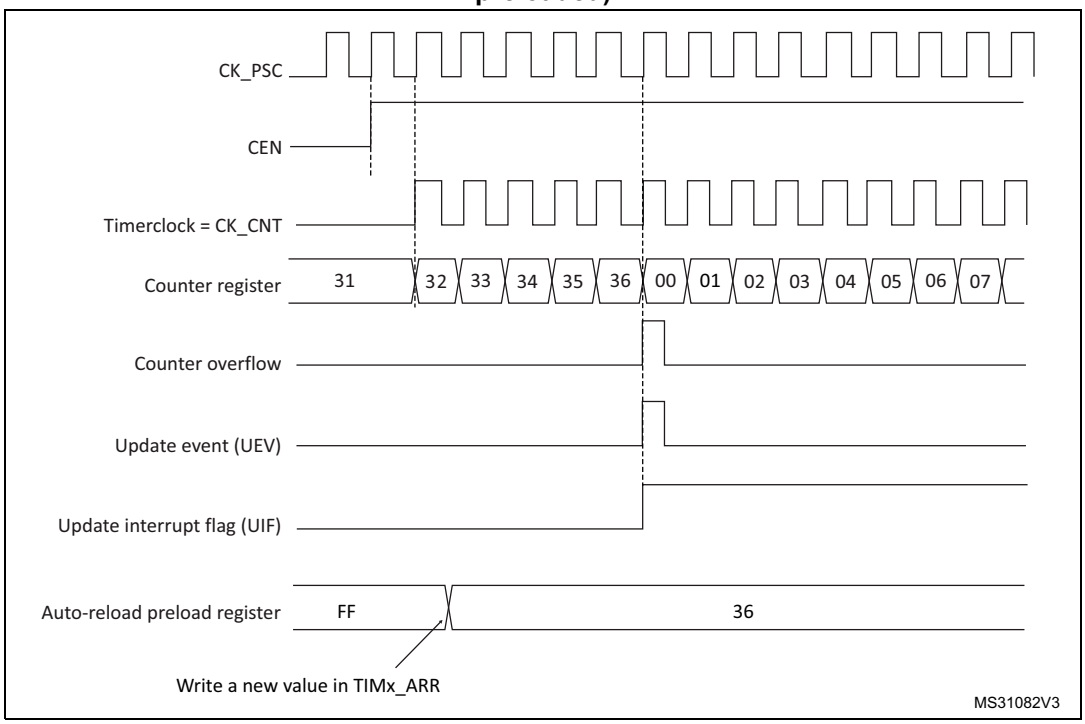

Figure 189. Counter timing diagram, update event when ARPE=1 (TIMx_ARR preloaded)

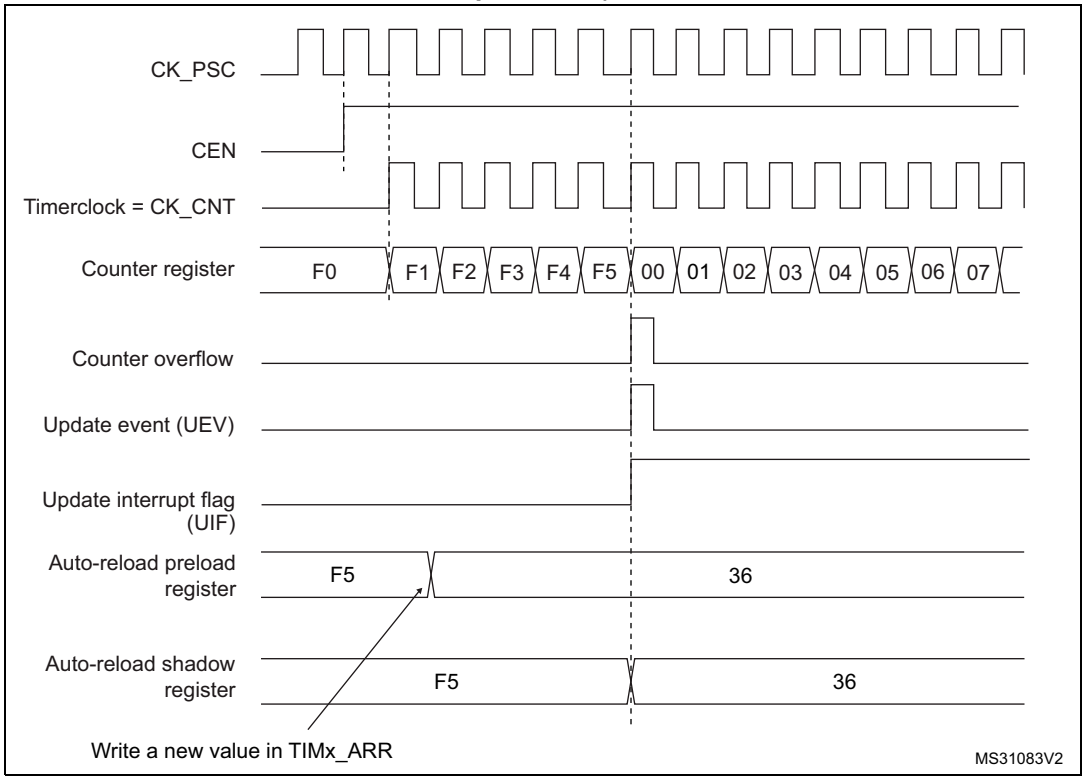

19.3.3 Clock selection

The counter clock can be provided by the following clock sources:

- Internal clock (CK_INT)
- External clock mode1 (for **TIM9 and TIM1**2): external input pin (TIx)
- Internal trigger inputs (ITRx) (for **TIM9 and TIM1**2): connecting the trigger output from another timer. Refer to *Using one timer as prescaler for another timer* for more details.

Internal clock source (CK_INT)

The internal clock source is the default clock source for TIM10/TIM11 and TIM13/TIM14.

For TIM9 and TIM12, the internal clock source is selected when the slave mode controller is disabled (SMS='000'). The CEN bit in the TIMx_CR1 register and the UG bit in the TIMx_EGR register are then used as control bits and can be changed only by software (except for UG which remains cleared). As soon as the CEN bit is programmed to 1, the prescaler is clocked by the internal clock CK_INT.

Figure 190 shows the behavior of the control circuit and of the upcounter in normal mode, without prescaler.

Figure 190. Control circuit in normal mode, internal clock divided by 1

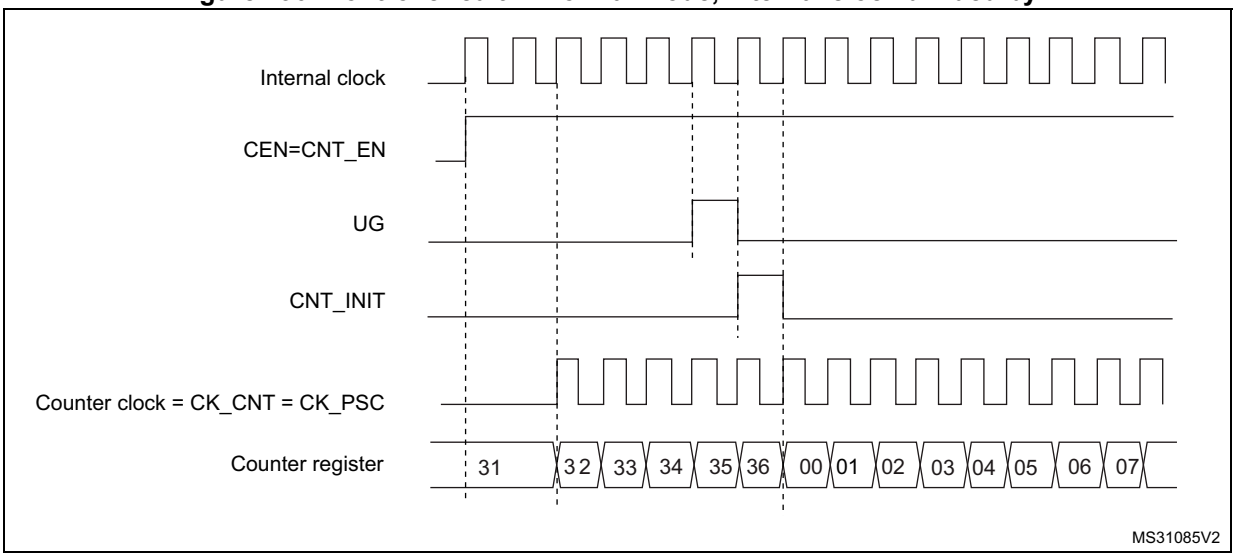

External clock source mode 1(TIM9 and TIM12)

This mode is selected when SMS='111' in the TIMx_SMCR register. The counter can count at each rising or falling edge on a selected input.

Figure 191. TI2 external clock connection example

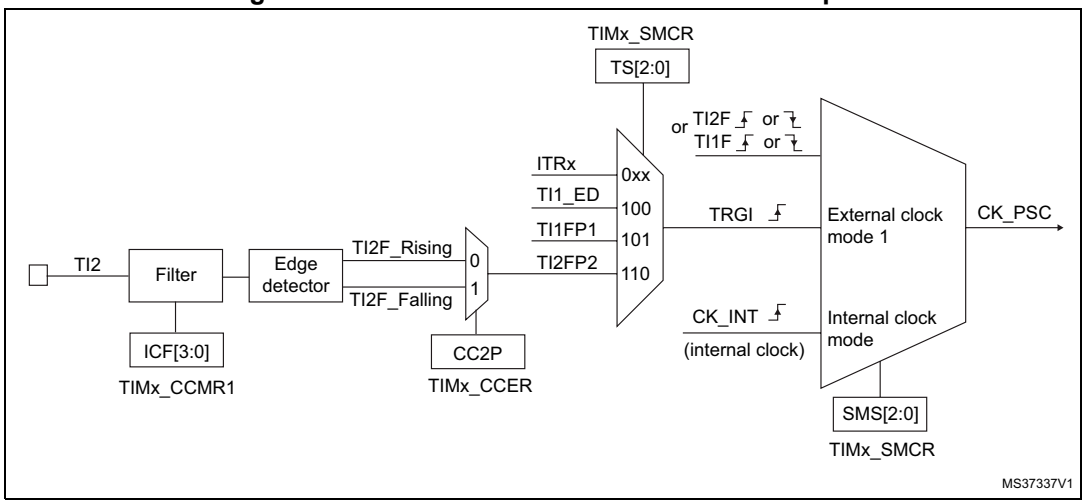

For example, to configure the upcounter to count in response to a rising edge on the TI2 input, use the following procedure:

1. Configure channel 2 to detect rising edges on the TI2 input by writing CC2S = ‘01’ in the TIMx_CCMR1 register.
2. Configure the input filter duration by writing the IC2F[3:0] bits in the TIMx_CCMR1 register (if no filter is needed, keep IC2F=’0000’).
3. Select the rising edge polarity by writing CC2P=’0’ and CC2NP=’0’ in the TIMx_CCER register.
4. Configure the timer in external clock mode 1 by writing SMS=’111’ in the TIMx_SMCR register.
5. Select TI2 as the trigger input source by writing TS=’110’ in the TIMx_SMCR register.
6. Enable the counter by writing CEN=’1’ in the TIMx_CR1 register.

Note: The capture prescaler is not used for triggering, so no need to configure it.

When a rising edge occurs on TI2, the counter counts once and the TIF flag is set.

The delay between the rising edge on TI2 and the actual clock of the counter is due to the resynchronization circuit on TI2 input.

Figure 192. Control circuit in external clock mode 1

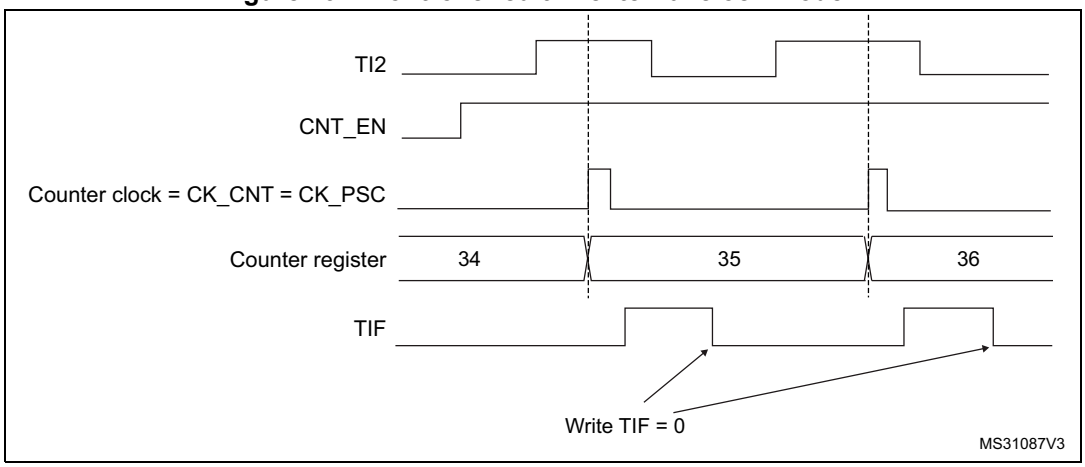

19.3.4 Capture/compare channels

Each Capture/Compare channel is built around a capture/compare register (including a shadow register), a input stage for capture (with digital filter, multiplexing and prescaler) and an output stage (with comparator and output control).

Figure 193 to *Figure 195* give an overview of a capture/compare channel.

The input stage samples the corresponding TIx input to generate a filtered signal TIxF. Then, an edge detector with polarity selection generates a signal (TIxFPx) which can be used as trigger input by the slave mode controller or as the capture command. It is prescaled before the capture register (ICxPS).

Figure 193. Capture/compare channel (example: channel 1 input stage)

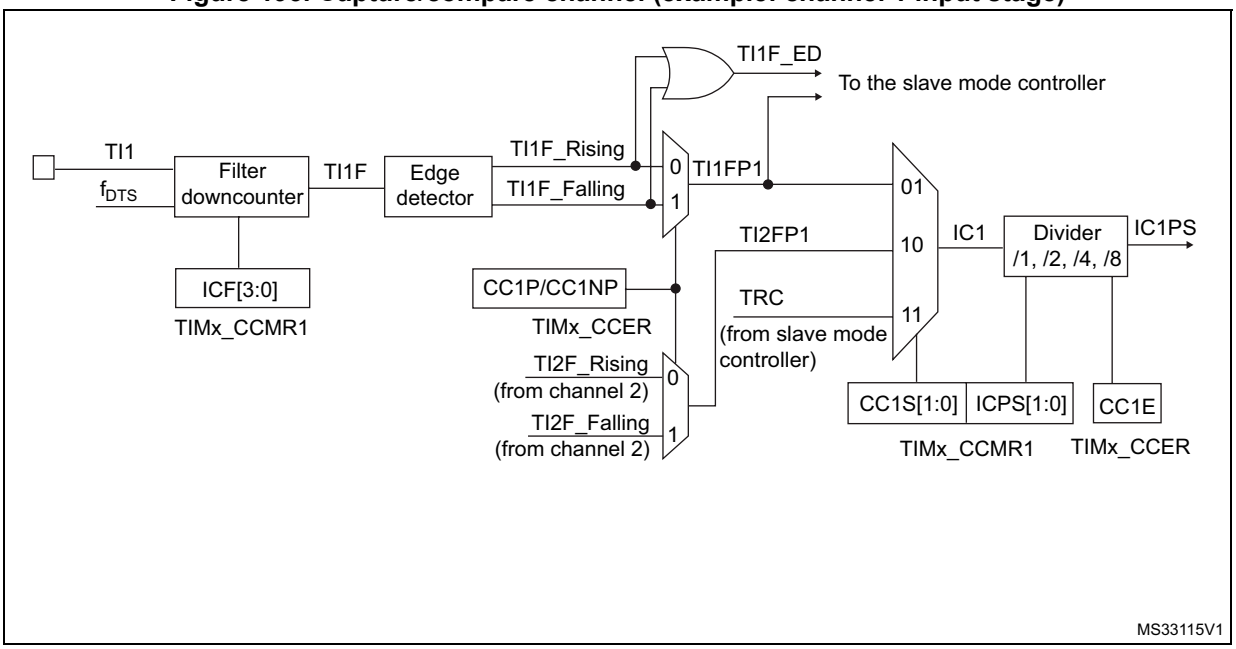

The output stage generates an intermediate waveform which is then used for reference: OCxRef (active high). The polarity acts at the end of the chain.

Figure 194. Capture/compare channel 1 main circuit

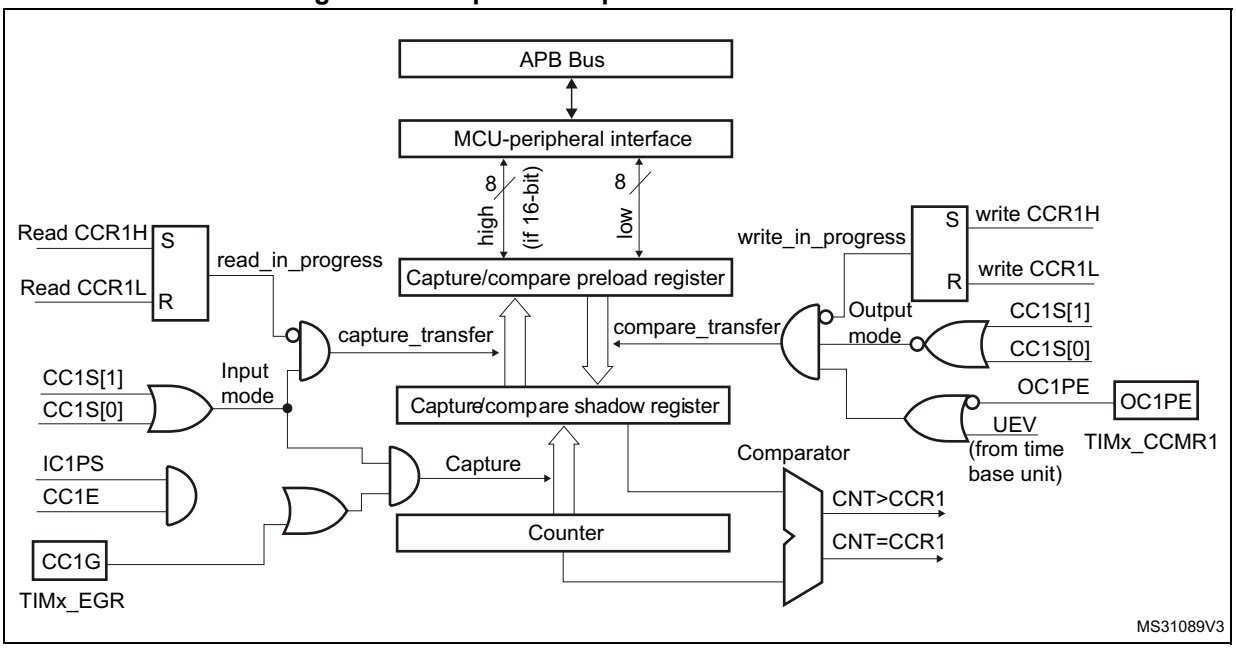

Figure 195. Output stage of capture/compare channel (channel 1)

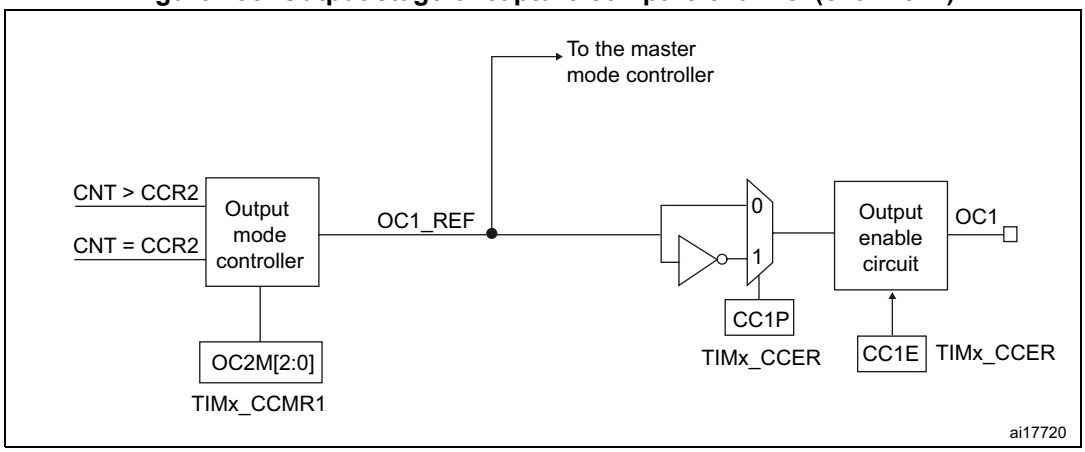

The capture/compare block is made of one preload register and one shadow register. Write and read always access the preload register.

In capture mode, captures are actually done in the shadow register, which is copied into the preload register.

In compare mode, the content of the preload register is copied into the shadow register which is compared to the counter.

19.3.5 Input capture mode

In Input capture mode, the Capture/Compare Registers (TIMx_CCRx) are used to latch the value of the counter after a transition detected by the corresponding ICx signal. When a capture occurs, the corresponding CCXIF flag (TIMx_SR register) is set and an interrupt or a DMA request can be sent if they are enabled. If a capture occurs while the CCxIF flag was already high, then the over-capture flag CCxOF (TIMx_SR register) is set. CCxIF can be

cleared by software by writing it to ‘0’ or by reading the captured data stored in the TIMx_CCRx register. CCxOF is cleared when the user writes it to ‘0’.

The following example shows how to capture the counter value in TIMx_CCR1 when TI1 input rises. To do this, use the following procedure:

1. Select the active input: TIMx_CCR1 must be linked to the TI1 input, so write the CC1S bits to ‘01’ in the TIMx_CCMR1 register. As soon as CC1S becomes different from ‘00’, the channel is configured in input mode and the TIMx_CCR1 register becomes read-only.
2. Program the needed input filter duration with respect to the signal connected to the timer (by programming the ICxF bits in the TIMx_CCMRx register if the input is one of the TIx inputs). Let’s imagine that, when toggling, the input signal is not stable during at must 5 internal clock cycles. We must program a filter duration longer than these 5 clock cycles. We can validate a transition on TI1 when 8 consecutive samples with the new level have been detected (sampled at f_{DTS} frequency). Then write IC1F bits to ‘0011’ in the TIMx_CCMR1 register.
3. Select the edge of the active transition on the TI1 channel by programming CC1P and CC1NP bits to ‘00’ in the TIMx_CCER register (rising edge in this case).
4. Program the input prescaler. In our example, we wish the capture to be performed at each valid transition, so the prescaler is disabled (write IC1PS bits to ‘00’ in the TIMx_CCMR1 register).
5. Enable capture from the counter into the capture register by setting the CC1E bit in the TIMx_CCER register.
6. If needed, enable the related interrupt request by setting the CC1IE bit in the TIMx_DIER register.

When an input capture occurs:

- The TIMx_CCR1 register gets the value of the counter on the active transition.
- CC1IF flag is set (interrupt flag). CC1OF is also set if at least two consecutive captures occurred whereas the flag was not cleared.
- An interrupt is generated depending on the CC1IE bit.

In order to handle the overcapture, it is recommended to read the data before the overcapture flag. This is to avoid missing an overcapture which could happen after reading the flag and before reading the data.

Note: IC interrupt requests can be generated by software by setting the corresponding CCxG bit in the TIMx_EGR register.

19.3.6 PWM input mode (only for TIM9/12)

This mode is a particular case of input capture mode. The procedure is the same except:

- Two ICx signals are mapped on the same TIx input.
- These 2 ICx signals are active on edges with opposite polarity.
- One of the two TIxFP signals is selected as trigger input and the slave mode controller is configured in reset mode.

For example, the user can measure the period (in TIMx_CCR1 register) and the duty cycle (in TIMx_CCR2 register) of the PWM applied on TI1 using the following procedure (depending on CK_INT frequency and prescaler value):

1. Select the active input for TIMx_CCR1: write the CC1S bits to '01' in the TIMx_CCMR1 register (TI1 selected).
2. Select the active polarity for TI1FP1 (used both for capture in TIMx_CCR1 and counter clear): program the CC1P and CC1NP bits to '00' (active on rising edge).
3. Select the active input for TIMx_CCR2: write the CC2S bits to '10' in the TIMx_CCMR1 register (TI1 selected).
4. Select the active polarity for TI1FP2 (used for capture in TIMx_CCR2): program the CC2P and CC2NP bits to '11' (active on falling edge).
5. Select the valid trigger input: write the TS bits to '101' in the TIMx_SMCR register (TI1FP1 selected).
6. Configure the slave mode controller in reset mode: write the SMS bits to '100' in the TIMx_SMCR register.
7. Enable the captures: write the CC1E and CC2E bits to '1' in the TIMx_CCER register.

Figure 196. PWM input mode timing

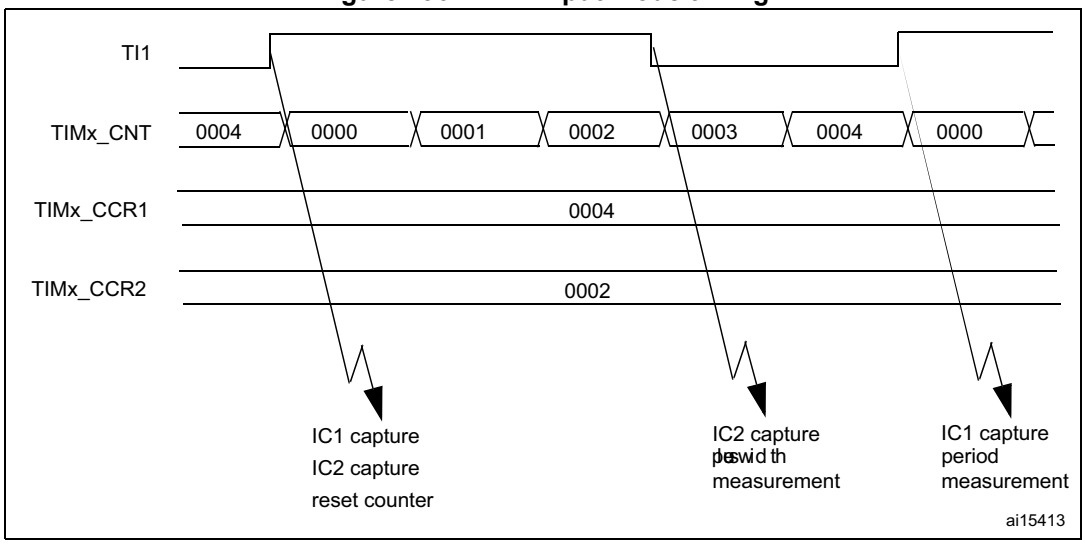

1. The PWM input mode can be used only with the TIMx_CH1/TIMx_CH2 signals due to the fact that only TI1FP1 and TI2FP2 are connected to the slave mode controller.

19.3.7 Forced output mode

In output mode (CCxS bits = ‘00’ in the TIMx_CCMRx register), each output compare signal (OCxREF and then OCx) can be forced to active or inactive level directly by software, independently of any comparison between the output compare register and the counter.

To force an output compare signal (OCXREF/OCx) to its active level, the user just needs to write ‘101’ in the OCxM bits in the corresponding TIMx_CCMRx register. Thus OCXREF is forced high (OCxREF is always active high) and OCx get opposite value to CCxP polarity bit.

For example: CCxP=’0’ (OCx active high) => OCx is forced to high level.

The OCxREF signal can be forced low by writing the OCxM bits to ‘100’ in the TIMx_CCMRx register.

Anyway, the comparison between the TIMx_CCRx shadow register and the counter is still performed and allows the flag to be set. Interrupt requests can be sent accordingly. This is described in the output compare mode section below.

19.3.8 Output compare mode

This function is used to control an output waveform or indicating when a period of time has elapsed.

When a match is found between the capture/compare register and the counter, the output compare function:

1. Assigns the corresponding output pin to a programmable value defined by the output compare mode (OCxM bits in the TIMx_CCMRx register) and the output polarity (CCxP bit in the TIMx_CCER register). The output pin can keep its level (OCXM=’000’), be set active (OCxM=’001’), be set inactive (OCxM=’010’) or can toggle (OCxM=’011’) on match.
2. Sets a flag in the interrupt status register (CCxIF bit in the TIMx_SR register).
3. Generates an interrupt if the corresponding interrupt mask is set (CCXIE bit in the TIMx_DIER register).

The TIMx_CCRx registers can be programmed with or without preload registers using the OCxPE bit in the TIMx_CCMRx register.

In output compare mode, the update event UEV has no effect on OCxREF and OCx output. The timing resolution is one count of the counter. Output compare mode can also be used to output a single pulse (in One-pulse mode).

Procedure:

1. Select the counter clock (internal, external, prescaler).
2. Write the desired data in the TIMx_ARR and TIMx_CCRx registers.
3. Set the CCxIE bit if an interrupt request is to be generated.
4. Select the output mode. For example:
   - Write OCxM = ‘011’ to toggle OCx output pin when CNT matches CCRx
   - Write OCxPE = ‘0’ to disable preload register
   - Write CCxP = ‘0’ to select active high polarity
   - Write CCxE = ‘1’ to enable the output
5. Enable the counter by setting the CEN bit in the TIMx_CR1 register.

The TIMx_CCRx register can be updated at any time by software to control the output waveform, provided that the preload register is not enabled (OCxPE='0', else TIMx_CCRx shadow register is updated only at the next update event UEV). An example is given in *Figure 197*.

Figure 197. Output compare mode, toggle on OC1.

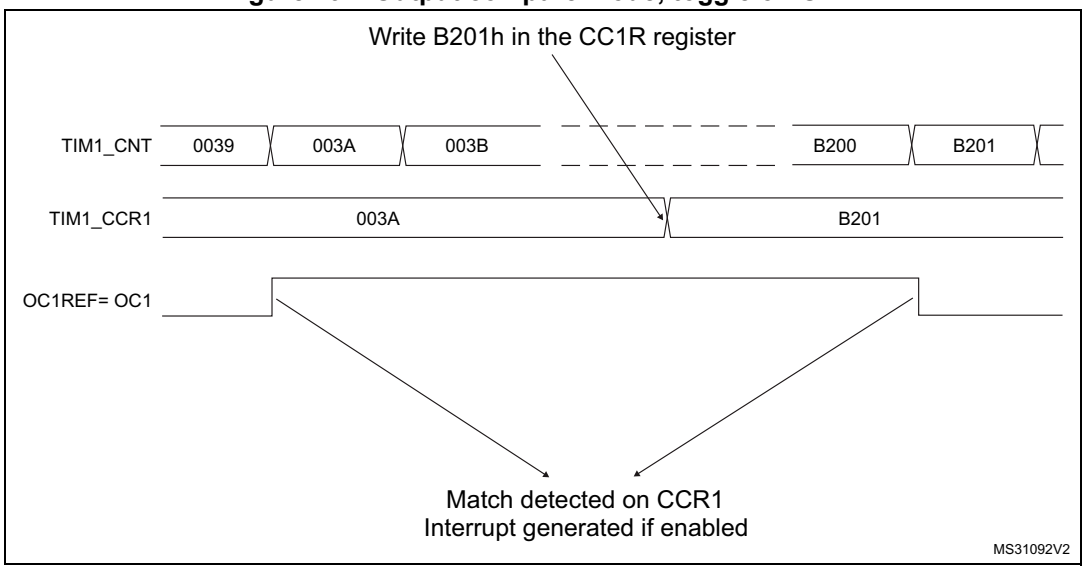

19.3.9 PWM mode

Pulse Width Modulation mode allows the user to generate a signal with a frequency determined by the value of the TIMx_ARR register and a duty cycle determined by the value of the TIMx_CCRx register.

The PWM mode can be selected independently on each channel (one PWM per OCx output) by writing '110' (PWM mode 1) or '111' (PWM mode 2) in the OCxM bits in the TIMx_CCMRx register. Enable the corresponding preload register by setting the OCxPE bit in the TIMx_CCMRx register, and eventually the auto-reload preload register by setting the ARPE bit in the TIMx_CR1 register.

As the preload registers are transferred to the shadow registers only when an update event occurs, before starting the counter, the user has to initialize all the registers by setting the UG bit in the TIMx_EGR register.

The OCx polarity is software programmable using the CCxP bit in the TIMx_CCER register. It can be programmed as active high or active low. The OCx output is enabled by the CCxE bit in the TIMx_CCER register. Refer to the TIMx_CCERx register description for more details.

In PWM mode (1 or 2), TIMx_CNT and TIMx_CCRx are always compared to determine whether TIMx_CNT ≤TIMx_CCRx.

The timer is able to generate PWM in edge-aligned mode only since the counter is upcounting.

PWM edge-aligned mode

In the following example, we consider PWM mode 1. The reference PWM signal OCxREF is high as long as TIMx_CNT < TIMx_CCRx else it becomes low. If the compare value in

TIMx_CCRx is greater than the auto-reload value (in TIMx_ARR) then OCxREF is held at ‘1’. If the compare value is 0 then OCxRef is held at ‘0’. *Figure 198* shows some edge-aligned PWM waveforms in an example where TIMx_ARR=8.

Figure 198. Edge-aligned PWM waveforms (ARR=8)

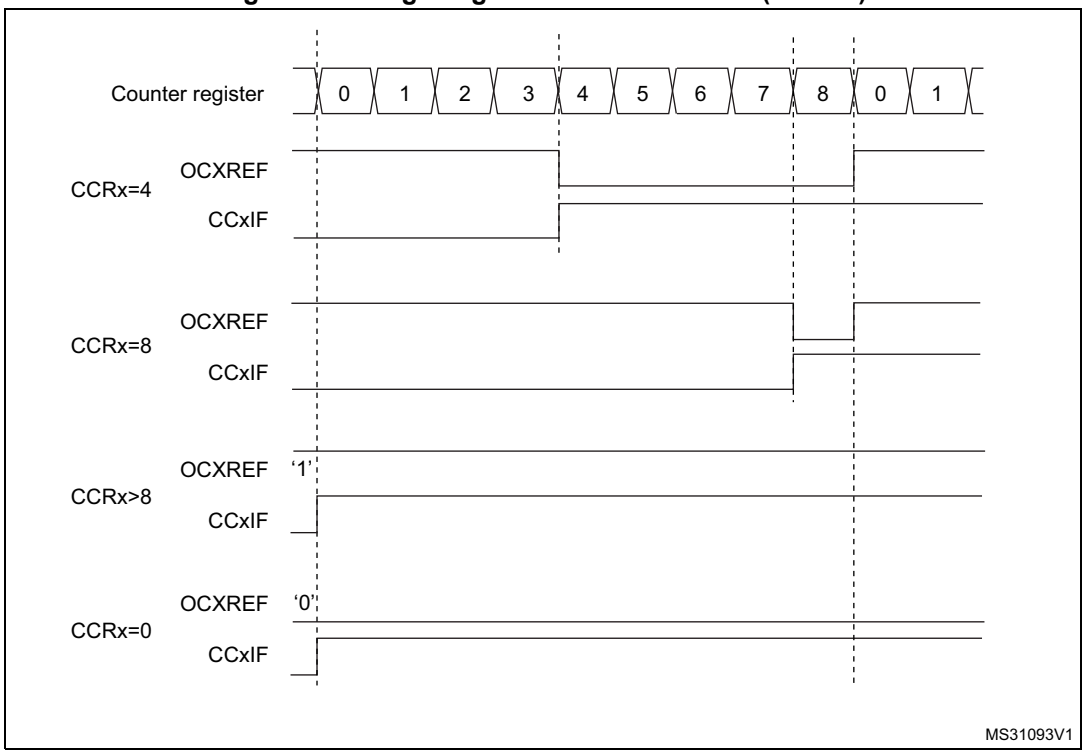

19.3.10 One-pulse mode

One-pulse mode (OPM) is a particular case of the previous modes. It allows the counter to be started in response to a stimulus and to generate a pulse with a programmable length after a programmable delay.

Starting the counter can be controlled through the slave mode controller. Generating the waveform can be done in output compare mode or PWM mode. Select One-pulse mode by setting the OPM bit in the TIMx_CR1 register. This makes the counter stop automatically at the next update event UEV.

A pulse can be correctly generated only if the compare value is different from the counter initial value. Before starting (when the timer is waiting for the trigger), the configuration must be as follows:

CNT < CCRx≤ ARR (in particular, 0 < CCRx)

Figure 199. Example of one pulse mode.

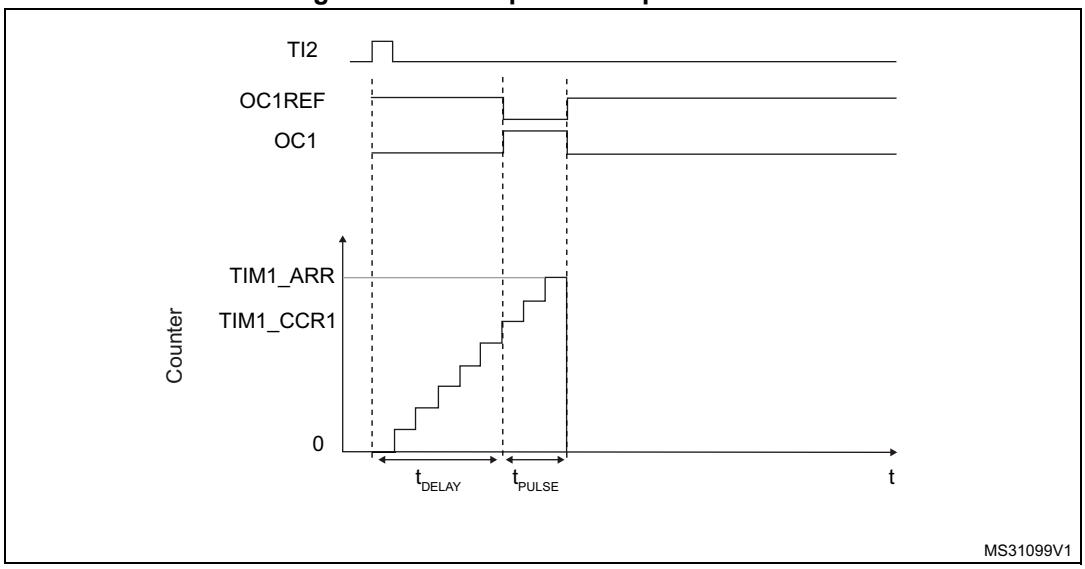

For example the user may want to generate a positive pulse on OC1 with a length of t_{PULSE} and after a delay of t_{DELAY} as soon as a positive edge is detected on the TI2 input pin.

Use TI2FP2 as trigger 1:

1. Map TI2FP2 to TI2 by writing CC2S=’01’ in the TIMx_CCMR1 register.
2. TI2FP2 must detect a rising edge, write CC2P=’0’ and CC2NP = ‘0’ in the TIMx_CCER register.
3. Configure TI2FP2 as trigger for the slave mode controller (TRGI) by writing TS=’110’ in the TIMx_SMCR register.
4. TI2FP2 is used to start the counter by writing SMS to ‘110’ in the TIMx_SMCR register (trigger mode).

The OPM waveform is defined by writing the compare registers (taking into account the clock frequency and the counter prescaler).

- The t_{DELAY} is defined by the value written in the TIMx_CCR1 register.
- The t_{PULSE} is defined by the difference between the auto-reload value and the compare value (TIMx_ARR - TIMx_CCR1).
- Let us say the user wants to build a waveform with a transition from ‘0’ to ‘1’ when a compare match occurs and a transition from ‘1’ to ‘0’ when the counter reaches the auto-reload value. To do this enable PWM mode 2 by writing OC1M=’111’ in the TIMx_CCMR1 register. The user can optionally enable the preload registers by writing OC1PE=’1’ in the TIMx_CCMR1 register and ARPE in the TIMx_CR1 register. In this case the user has to write the compare value in the TIMx_CCR1 register, the auto-reload value in the TIMx_ARR register, generate an update by setting the UG bit and wait for external trigger event on TI2. CC1P is written to ‘0’ in this example.

The user only wants one pulse (Single mode), so write '1 in the OPM bit in the TIMx_CR1 register to stop the counter at the next update event (when the counter rolls over from the auto-reload value back to 0). When OPM bit in the TIMx_CR1 register is set to '0', so the Repetitive Mode is selected.

Particular case: OCx fast enable

In One-pulse mode, the edge detection on TIx input set the CEN bit which enables the counter. Then the comparison between the counter and the compare value makes the output toggle. But several clock cycles are needed for these operations and it limits the minimum delay t_{DELAY} min we can get.

If the user wants to output a waveform with the minimum delay, set the OCxFE bit in the TIMx_CCMRx register. Then OCxRef (and OCx) are forced in response to the stimulus, without taking in account the comparison. Its new level is the same as if a compare match had occurred. OCxFE acts only if the channel is configured in PWM1 or PWM2 mode.

19.3.11 TIM9/12 external trigger synchronization

The TIM9/12 timers can be synchronized with an external trigger in several modes: Reset mode, Gated mode and Trigger mode.

Slave mode: Reset mode

The counter and its prescaler can be reinitialized in response to an event on a trigger input. Moreover, if the URS bit from the TIMx_CR1 register is low, an update event UEV is generated. Then all the preloaded registers (TIMx_ARR, TIMx_CCRx) are updated.

In the following example, the upcounter is cleared in response to a rising edge on TI1 input:

1. Configure the channel 1 to detect rising edges on TI1. Configure the input filter duration (in this example, we don't need any filter, so we keep IC1F='0000'). The capture prescaler is not used for triggering, so there's no need to configure it. The CC1S bits select the input capture source only, CC1S = '01' in the TIMx_CCMR1 register. Program CC1P and CC1NP to '00' in TIMx_CCER register to validate the polarity (and detect rising edges only).
2. Configure the timer in reset mode by writing SMS='100' in TIMx_SMCR register. Select TI1 as the input source by writing TS='101' in TIMx_SMCR register.
3. Start the counter by writing CEN='1' in the TIMx_CR1 register.

The counter starts counting on the internal clock, then behaves normally until TI1 rising edge. When TI1 rises, the counter is cleared and restarts from 0. In the meantime, the trigger flag is set (TIF bit in the TIMx_SR register) and an interrupt request can be sent if enabled (depending on the TIE bit in TIMx_DIER register).

The following figure shows this behavior when the auto-reload register TIMx_ARR=0x36. The delay between the rising edge on TI1 and the actual reset of the counter is due to the resynchronization circuit on TI1 input.

Figure 200. Control circuit in reset mode

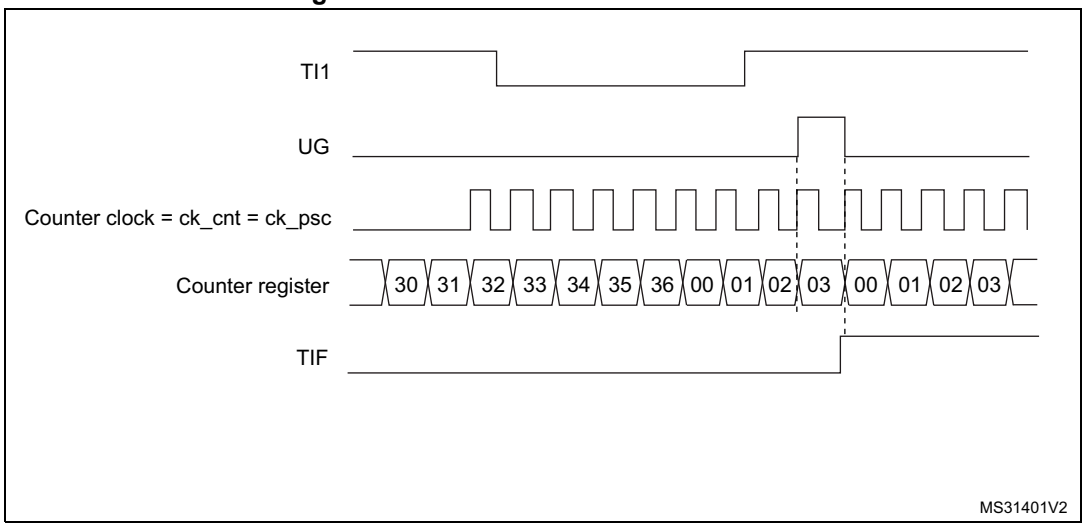

Slave mode: Gated mode

The counter can be enabled depending on the level of a selected input.

In the following example, the upcounter counts only when TI1 input is low:

1. Configure the channel 1 to detect low levels on TI1. Configure the input filter duration (in this example, we don't need any filter, so we keep IC1F='0000'). The capture prescaler is not used for triggering, so there's no need to configure it. The CC1S bits select the input capture source only, CC1S='01' in TIMx_CCMR1 register. Program CC1P='1' and CC1NP= '0' in TIMx_CCER register to validate the polarity (and detect low level only).
2. Configure the timer in gated mode by writing SMS='101' in TIMx_SMCR register. Select TI1 as the input source by writing TS='101' in TIMx_SMCR register.
3. Enable the counter by writing CEN='1' in the TIMx_CR1 register (in gated mode, the counter doesn't start if CEN='0', whatever is the trigger input level).

The counter starts counting on the internal clock as long as TI1 is low and stops as soon as TI1 becomes high. The TIF flag in the TIMx_SR register is set both when the counter starts or stops.

The delay between the rising edge on TI1 and the actual stop of the counter is due to the resynchronization circuit on TI1 input.

Figure 201. Control circuit in gated mode

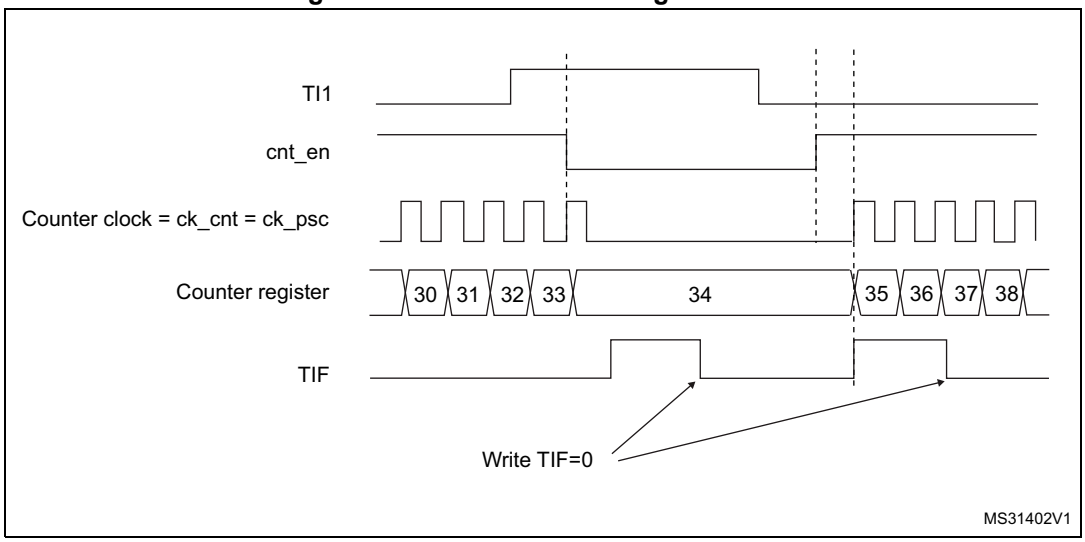

Slave mode: Trigger mode

The counter can start in response to an event on a selected input.

In the following example, the upcounter starts in response to a rising edge on TI2 input:

1. Configure the channel 2 to detect rising edges on TI2. Configure the input filter duration (in this example, we don't need any filter, so we keep IC2F='0000'). The capture prescaler is not used for triggering, so there's no need to configure it. The CC2S bits are configured to select the input capture source only, CC2S='01' in TIMx_CCMR1 register. Program CC2P='1' and CC2NP='0' in TIMx_CCER register to validate the polarity (and detect low level only).
2. Configure the timer in trigger mode by writing SMS='110' in TIMx_SMCR register. Select TI2 as the input source by writing TS='110' in TIMx_SMCR register.

When a rising edge occurs on TI2, the counter starts counting on the internal clock and the TIF flag is set.

The delay between the rising edge on TI2 and the actual start of the counter is due to the resynchronization circuit on TI2 input.

Figure 202. Control circuit in trigger mode

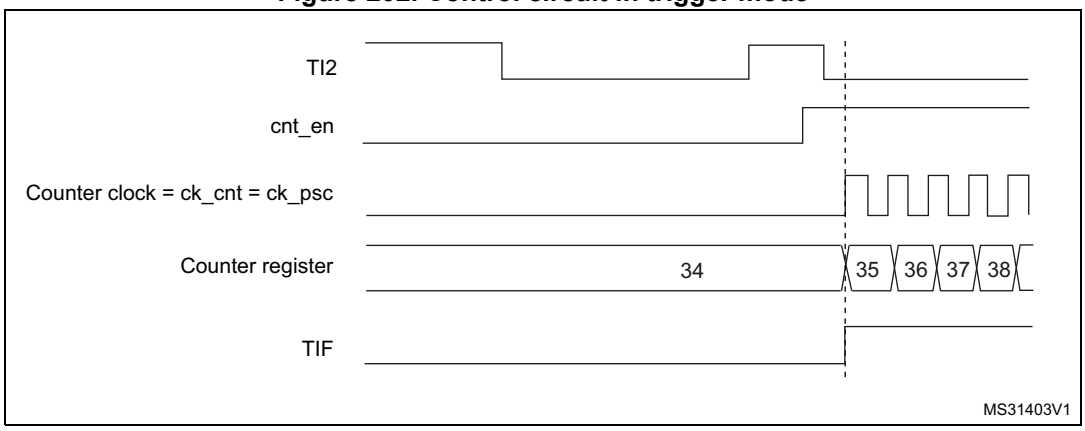

19.3.12 Timer synchronization (TIM9/12)

The TIM timers are linked together internally for timer synchronization or chaining. Refer to *Section 18.3.15: Timer synchronization* for details.

Note: The clock of the slave timer must be enabled prior to receive events from the master timer, and must not be changed on-the-fly while triggers are received from the master timer.

19.3.13 Debug mode

When the microcontroller enters debug mode (Cortex®-M4 with FPU core halted), the TIMx counter either continues to work normally or stops, depending on DBG_TIMx_STOP configuration bit in DBG module. For more details, refer to *Section 38.16.2: Debug support for timers, watchdog, bxCAN and I^2C*.

19.4 TIM9 and TIM12 registers

Refer to *Section 1.1* for a list of abbreviations used in register descriptions.

The peripheral registers have to be written by half-words (16 bits) or words (32 bits). Read accesses can be done by bytes (8 bits), half-words (16 bits) or words (32 bits).

19.4.1 TIM9/12 control register 1 (TIMx_CR1)

Address offset: 0x00

Reset value: 0x0000

15	14	13	12	11	10	9	8	7	6	5	4	3	2	1	0
Reserved						CKD[1:0]		ARPE	Reserved			OPM	URS	UDIS	CEN
						rw	rw	rw				rw	rw	rw	rw

Bits 15:10 Reserved, must be kept at reset value.

Bits 9:8 **CKD**: Clock division

This bit-field indicates the division ratio between the timer clock (CK_INT) frequency and sampling clock used by the digital filters (TIx),

00: $t_{DTS} = t_{CK_INT}$
01: $t_{DTS} = 2 \times t_{CK_INT}$
10: $t_{DTS} = 4 \times t_{CK_INT}$
11: Reserved

Bit 7 **ARPE**: Auto-reload preload enable

0: TIMx_ARR register is not buffered.
1: TIMx_ARR register is buffered.

Bits 6:4 Reserved, must be kept at reset value.

Bit 3 **OPM**: One-pulse mode

0: Counter is not stopped on the update event
1: Counter stops counting on the next update event (clearing the CEN bit).

Bit 2 **URS**: Update request source

This bit is set and cleared by software to select the UEV event sources.

0: Any of the following events generates an update interrupt if enabled:
- Counter overflow
- Setting the UG bit

1: Only counter overflow generates an update interrupt if enabled.

Bit 1 **UDIS**: Update disable

This bit is set and cleared by software to enable/disable update event (UEV) generation.

0: UEV enabled. An UEV is generated by one of the following events:
- Counter overflow
- Setting the UG bit

Buffered registers are then loaded with their preload values.

1: UEV disabled. No UEV is generated, shadow registers keep their value (ARR, PSC, CCRx). The counter and the prescaler are reinitialized if the UG bit is set.

Bit 0 **CEN**: Counter enable

0: Counter disabled
1: Counter enabled

CEN is cleared automatically in one-pulse mode, when an update event occurs.

19.4.2 TIM9/12 slave mode control register (TIMx_SMCR)

Address offset: 0x08

Reset value: 0x0000

15	14	13	12	11	10	9	8	7	6	5	4	3	2	1	0
Reserved								MSM	TS[2:0]			Res.	SMS[2:0]		
								rw	rw	rw	rw		rw	rw	rw

Bits 15:8 Reserved, must be kept at reset value.

Bit 7 **MSM:** Master/Slave mode

0: No action

1: The effect of an event on the trigger input (TRGI) is delayed to allow a perfect synchronization between the current timer and its slaves (through TRGO). It is useful in order to synchronize several timers on a single external event.

Bits 6:4 **TS:** Trigger selection

This bit field selects the trigger input to be used to synchronize the counter.

000: Internal Trigger 0 (ITR0)

001: Internal Trigger 1 (ITR1)

010: Internal Trigger 2 (ITR2)

011: Internal Trigger 3 (ITR3)

100: TI1 Edge Detector (TI1F_ED)

101: Filtered Timer Input 1 (TI1FP1)

110: Filtered Timer Input 2 (TI2FP2)

111: Reserved.

See *Table 101* for more details on the meaning of ITRx for each timer.

Note: These bits must be changed only when they are not used (e.g. when SMS='000') to avoid wrong edge detections at the transition.

Bit 3 Reserved, must be kept at reset value.

Bits 2:0 **SMS:** Slave mode selection

When external signals are selected, the active edge of the trigger signal (TRGI) is linked to the polarity selected on the external input (see Input control register and Control register descriptions.

000: Slave mode disabled - if CEN = 1 then the prescaler is clocked directly by the internal clock

001: Reserved

010: Reserved

011: Reserved

100: Reset mode - Rising edge of the selected trigger input (TRGI) reinitializes the counter and generates an update of the registers

101: Gated mode - The counter clock is enabled when the trigger input (TRGI) is high. The counter stops (but is not reset) as soon as the trigger becomes low. Counter starts and stops are both controlled

110: Trigger mode - The counter starts on a rising edge of the trigger TRGI (but it is not reset). Only the start of the counter is controlled

111: External clock mode 1 - Rising edges of the selected trigger (TRGI) clock the counter

Note: The Gated mode must not be used if TI1F_ED is selected as the trigger input (TS='100'). Indeed, TI1F_ED outputs 1 pulse for each transition on TI1F, whereas the Gated mode checks the level of the trigger signal.

Note: The clock of the slave timer must be enabled prior to receive events from the master timer, and must not be changed on-the-fly while triggers are received from the master timer.

Table 101. TIMx internal trigger connection

Slave TIM	ITR0 (TS = 000)	ITR1 (TS = 001)	ITR2 (TS = 010)	ITR3 (TS = 011)
TIM9	TIM2_TRGO	TIM3_TRGO	TIM10_OC	TIM11_OC
TIM12	TIM4_TRGO	TIM5_TRGO	TIM13_OC	TIM14_OC

19.4.3 TIM9/12 Interrupt enable register (TIMx_DIER)

Address offset: 0x0C

Reset value: 0x0000

15	14	13	12	11	10	9	8	7	6	5	4	3	2	1	0
Reserved									TIE	Res			CC2IE	CC1IE	UIE
									rw				rw	rw	rw

Bits 15:7 Reserved, must be kept at reset value.

Bit 6 **TIE**: Trigger interrupt enable

0: Trigger interrupt disabled.

1: Trigger interrupt enabled.

Bit 5:3 Reserved, must be kept at reset value.

Bit 2 **CC2IE**: Capture/Compare 2 interrupt enable

0: CC2 interrupt disabled.
1: CC2 interrupt enabled.

Bit 1 **CC1IE**: Capture/Compare 1 interrupt enable

0: CC1 interrupt disabled.
1: CC1 interrupt enabled.

Bit 0 **UIE**: Update interrupt enable

0: Update interrupt disabled.
1: Update interrupt enabled.

19.4.4 TIM9/12 status register (TIMx_SR)

Address offset: 0x10

Reset value: 0x0000

15	14	13	12	11	10	9	8	7	6	5	4	3	2	1	0
Reserved					CC2OF	CC1OF	Reserved		TIF	Reserved			CC2IF	CC1IF	UIF
					rc_w0	rc_w0			rc_w0				rc_w0	rc_w0	rc_w0

Bits 15:11 Reserved, must be kept at reset value.

Bit 10 **CC2OF**: Capture/compare 2 overcapture flag
refer to CC1OF description

Bit 9 **CC1OF**: Capture/Compare 1 overcapture flag
This flag is set by hardware only when the corresponding channel is configured in input capture mode. It is cleared by software by writing it to ‘0’.
0: No overcapture has been detected.
1: The counter value has been captured in TIMx_CCR1 register while CC1IF flag was already set

Bits 8:7 Reserved, must be kept at reset value.

Bit 6 **TIF**: Trigger interrupt flag
This flag is set by hardware on trigger event (active edge detected on TRGI input when the slave mode controller is enabled in all modes but gated mode. It is set when the counter starts or stops when gated mode is selected. It is cleared by software.
0: No trigger event occurred.
1: Trigger interrupt pending.

Bits 5:3 Reserved, must be kept at reset value.

Bit 2 **CC2IF**: Capture/Compare 2 interrupt flag
refer to CC1IF description

Bit 1 **CC1IF**: Capture/compare 1 interrupt flag
If channel CC1 is configured as output:
This flag is set by hardware when the counter matches the compare value. It is cleared by software.
0: No match.
1: The content of the counter TIMx_CNT matches the content of the TIMx_CCR1 register. When the contents of TIMx_CCR1 are greater than the contents of TIMx_ARR, the CC1IF bit goes high on the counter overflow.
If channel CC1 is configured as input:
This bit is set by hardware on a capture. It is cleared by software or by reading the TIMx_CCR1 register.
0: No input capture occurred.
1: The counter value has been captured in TIMx_CCR1 register (an edge has been detected on IC1 which matches the selected polarity).

Bit 0 **UIF**: Update interrupt flag

This bit is set by hardware on an update event. It is cleared by software.

0: No update occurred.

1: Update interrupt pending. This bit is set by hardware when the registers are updated:

– At overflow and if UDIS=’0’ in the TIMx_CR1 register.

– When CNT is reinitialized by software using the UG bit in TIMx_EGR register, if URS=’0’ and UDIS=’0’ in the TIMx_CR1 register.

– When CNT is reinitialized by a trigger event (refer to the synchro control register description), if URS=’0’ and UDIS=’0’ in the TIMx_CR1 register.

19.4.5 TIM9/12 event generation register (TIMx_EGR)

Address offset: 0x14

Reset value: 0x0000

15	14	13	12	11	10	9	8	7	6	5	4	3	2	1	0
Reserved									TG	Reserved			CC2G	CC1G	UG
									w				w	w	w

Bits 15:7 Reserved, must be kept at reset value.

Bit 6 **TG**: Trigger generation

This bit is set by software in order to generate an event, it is automatically cleared by hardware.

0: No action

1: The TIF flag is set in the TIMx_SR register. Related interrupt can occur if enabled

Bits 5:3 Reserved, must be kept at reset value.

Bit 2 **CC2G**: Capture/compare 2 generation

refer to CC1G description

Bit 1 **CC1G**: Capture/compare 1 generation

This bit is set by software to generate an event, it is automatically cleared by hardware.

0: No action

1: A capture/compare event is generated on channel 1:

If channel CC1 is configured as output:

the CC1IF flag is set, the corresponding interrupt is sent if enabled.

If channel CC1 is configured as input:

The current counter value is captured in the TIMx_CCR1 register. The CC1IF flag is set, the corresponding interrupt is sent if enabled. The CC1OF flag is set if the CC1IF flag was already high.

Bit 0 **UG**: Update generation

This bit can be set by software, it is automatically cleared by hardware.

0: No action

1: Re-initializes the counter and generates an update of the registers. The prescaler counter is also cleared and the prescaler ratio is not affected. The counter is cleared.

19.4.6 TIM9/12 capture/compare mode register 1 (TIMx_CCMR1)

Address offset: 0x18

Reset value: 0x0000

The channels can be used in input (capture mode) or in output (compare mode). The direction of a channel is defined by configuring the corresponding CCxS bits. All the other bits in this register have different functions in input and output modes. For a given bit, OCxx describes its function when the channel is configured in output mode, ICxx describes its function when the channel is configured in input mode. Take care that the same bit can have different meanings for the input stage and the output stage.

15	14	13	12	11	10	9	8	7	6	5	4	3	2	1	0
Res.	OC2M[2:0]			OC2PE	OC2FE	CC2S[1:0]		Res.	OC1M[2:0]			OC1PE	OC1FE	CC1S[1:0]	
IC2F[3:0]				IC2PSC[1:0]				IC1F[3:0]				IC1PSC[1:0]			
rw	rw	rw	rw	rw	rw	rw	rw	rw	rw	rw	rw	rw	rw	rw	rw

Output compare mode

Bit 15 Reserved, must be kept at reset value.

Bits 14:12 **OC2M[2:0]**: Output compare 2 mode

Bit 11 **OC2PE**: Output compare 2 preload enable

Bit 10 **OC2FE**: Output compare 2 fast enable

Bits 9:8 **CC2S[1:0]**: Capture/Compare 2 selection

This bitfield defines the direction of the channel (input/output) as well as the used input.
00: CC2 channel is configured as output
01: CC2 channel is configured as input, IC2 is mapped on TI2
10: CC2 channel is configured as input, IC2 is mapped on TI1
11: CC2 channel is configured as input, IC2 is mapped on TRC. This mode works only if an internal trigger input is selected through the TS bit (TIMx_SMCR register

Note: The CC2S bits are writable only when the channel is OFF (CC2E = 0 in TIMx_CCER).

Bit 7 Reserved, must be kept at reset value.

Bits 6:4 **OC1M**: Output compare 1 mode

These bits define the behavior of the output reference signal OC1REF from which OC1 and OC1N are derived. OC1REF is active high whereas the active levels of OC1 and OC1N depend on the CC1P and CC1NP bits, respectively.
000: Frozen - The comparison between the output compare register TIMx_CCR1 and the counter TIMx_CNT has no effect on the outputs.(this mode is used to generate a timing base).
001: Set channel 1 to active level on match. The OC1REF signal is forced high when the TIMx_CNT counter matches the capture/compare register 1 (TIMx_CCR1).
010: Set channel 1 to inactive level on match. The OC1REF signal is forced low when the TIMx_CNT counter matches the capture/compare register 1 (TIMx_CCR1).
011: Toggle - OC1REF toggles when TIMx_CNT=TIMx_CCR1
100: Force inactive level - OC1REF is forced low
101: Force active level - OC1REF is forced high
110: PWM mode 1 - In upcounting, channel 1 is active as long as TIMx_CNT<TIMx_CCR1 else it is inactive. In downcounting, channel 1 is inactive (OC1REF=‘0) as long as TIMx_CNT>TIMx_CCR1, else it is active (OC1REF=’1’)
111: PWM mode 2 - In upcounting, channel 1 is inactive as long as TIMx_CNT<TIMx_CCR1 else it is active. In downcounting, channel 1 is active as long as TIMx_CNT>TIMx_CCR1 else it is inactive.

Note: In PWM mode 1 or 2, the OCREF level changes only when the result of the comparison changes or when the output compare mode switches from “frozen” mode to “PWM” mode.

Bit 3 **OC1PE**: Output compare 1 preload enable

0: Preload register on TIMx_CCR1 disabled. TIMx_CCR1 can be written at anytime, the new value is taken into account immediately
1: Preload register on TIMx_CCR1 enabled. Read/Write operations access the preload register. TIMx_CCR1 preload value is loaded into the active register at each update event

Note: The PWM mode can be used without validating the preload register only in one-pulse mode (OPM bit set in the TIMx_CR1 register). Else the behavior is not guaranteed.

Bit 2 **OC1FE**: Output compare 1 fast enable

This bit is used to accelerate the effect of an event on the trigger in input on the CC output.
0: CC1 behaves normally depending on the counter and CCR1 values even when the trigger is ON. The minimum delay to activate the CC1 output when an edge occurs on the trigger input is 5 clock cycles
1: An active edge on the trigger input acts like a compare match on the CC1 output. Then, OC is set to the compare level independently of the result of the comparison. Delay to sample the trigger input and to activate CC1 output is reduced to 3 clock cycles. OC1FE acts only if the channel is configured in PWM1 or PWM2 mode.

Bits 1:0 **CC1S**: Capture/Compare 1 selection

This bitfield defines the direction of the channel (input/output) as well as the used input.
00: CC1 channel is configured as output
01: CC1 channel is configured as input, IC1 is mapped on TI1
10: CC1 channel is configured as input, IC1 is mapped on TI2
11: CC1 channel is configured as input, IC1 is mapped on TRC. This mode works only if an internal trigger input is selected through the TS bit (TIMx_SMCR register)

Note: The CC1S bits are writable only when the channel is OFF (CC1E = 0 in TIMx_CCER).

Input capture mode

Bits 15:12 **IC2F**: Input capture 2 filter

Bits 11:10 **IC2PSC[1:0]**: Input capture 2 prescaler

Bits 9:8 **CC2S**: Capture/compare 2 selection

This bitfield defines the direction of the channel (input/output) as well as the used input.
00: CC2 channel is configured as output
01: CC2 channel is configured as input, IC2 is mapped on TI2
10: CC2 channel is configured as input, IC2 is mapped on TI1
11: CC2 channel is configured as input, IC2 is mapped on TRC. This mode works only if an internal trigger input is selected through the TS bit (TIMx_SMCR register)

Note: The CC2S bits are writable only when the channel is OFF (CC2E = 0 in TIMx_CCER).

Bits 7:4 **IC1F**: Input capture 1 filter

This bitfield defines the frequency used to sample the TI1 input and the length of the digital filter applied to TI1. The digital filter is made of an event counter in which N consecutive events are needed to validate a transition on the output:
0000: No filter, sampling is done at f_{DTS}
0001: $f_{SAMPLING}=f_{CK_INT}$, N=2
0010: $f_{SAMPLING}=f_{CK_INT}$, N=4
0011: $f_{SAMPLING}=f_{CK_INT}$, N=8
0100: $f_{SAMPLING}=f_{DTS}/2$, N=6
0101: $f_{SAMPLING}=f_{DTS}/2$, N=8
0110: $f_{SAMPLING}=f_{DTS}/4$, N=6
0111: $f_{SAMPLING}=f_{DTS}/4$, N=8
1000: $f_{SAMPLING}=f_{DTS}/8$, N=6
1001: $f_{SAMPLING}=f_{DTS}/8$, N=8
1010: $f_{SAMPLING}=f_{DTS}/16$, N=5
1011: $f_{SAMPLING}=f_{DTS}/16$, N=6
1100: $f_{SAMPLING}=f_{DTS}/16$, N=8
1101: $f_{SAMPLING}=f_{DTS}/32$, N=5
1110: $f_{SAMPLING}=f_{DTS}/32$, N=6
1111: $f_{SAMPLING}=f_{DTS}/32$, N=8

Bits 3:2 **IC1PSC**: Input capture 1 prescaler

This bitfield defines the ratio of the prescaler acting on the CC1 input (IC1).
The prescaler is reset as soon as CC1E='0' (TIMx_CCER register).
00: no prescaler, capture is done each time an edge is detected on the capture input
01: capture is done once every 2 events
10: capture is done once every 4 events
11: capture is done once every 8 events

Bits 1:0 **CC1S**: Capture/Compare 1 selection

This bitfield defines the direction of the channel (input/output) as well as the used input.
00: CC1 channel is configured as output
01: CC1 channel is configured as input, IC1 is mapped on TI1
10: CC1 channel is configured as input, IC1 is mapped on TI2
11: CC1 channel is configured as input, IC1 is mapped on TRC. This mode is working only if an internal trigger input is selected through TS bit (TIMx_SMCR register)

Note: The CC1S bits are writable only when the channel is OFF (CC1E = 0 in TIMx_CCER).

19.4.7 TIM9/12 capture/compare enable register (TIMx_CCER)

Address offset: 0x20

Reset value: 0x0000

15	14	13	12	11	10	9	8	7	6	5	4	3	2	1	0
Reserved								CC2NP	Res.	CC2P	CC2E	CC1NP	Res.	CC1P	CC1E
								rw		rw	rw	rw		rw	rw

Bits 15:8 Reserved, must be kept at reset value.

Bit 7 **CC2NP**: Capture/Compare 2 output Polarity
refer to CC1NP description

Bits 6 Reserved, must be kept at reset value.

Bit 5 **CC2P**: Capture/Compare 2 output Polarity
refer to CC1P description

Bit 4 **CC2E**: Capture/Compare 2 output enable
refer to CC1E description

Bit 3 **CC1NP**: Capture/Compare 1 complementary output Polarity
CC1 channel configured as output: CC1NP must be kept cleared
CC1 channel configured as input: CC1NP is used in conjunction with CC1P to define TI1FP1/TI2FP1 polarity (refer to CC1P description).

Bit 2 Reserved, must be kept at reset value.

Bit 1 **CC1P**: Capture/Compare 1 output Polarity.
CC1 channel configured as output:
0: OC1 active high.
1: OC1 active low.
CC1 channel configured as input:
CC1NP/CC1P bits select TI1FP1 and TI2FP1 polarity for trigger or capture operations.
00: noninverted/rising edge
Circuit is sensitive to TIxFP1 rising edge (capture, trigger in reset, external clock or trigger mode), TIxFP1 is not inverted (trigger in gated mode, encoder mode).
01: inverted/falling edge
Circuit is sensitive to TIxFP1 falling edge (capture, trigger in reset, external clock or trigger mode), TIxFP1 is inverted (trigger in gated mode, encoder mode).
10: reserved, do not use this configuration.

Note: 11: noninverted/both edges
Circuit is sensitive to both TIxFP1 rising and falling edges (capture, trigger in reset, external clock or trigger mode), TIxFP1 is not inverted (trigger in gated mode). This configuration must not be used for encoder mode.

Bit 0 **CC1E**: Capture/Compare 1 output enable.
CC1 channel configured as output:
0: Off - OC1 is not active.
1: On - OC1 signal is output on the corresponding output pin.
CC1 channel configured as input:
This bit determines if a capture of the counter value can actually be done into the input capture/compare register 1 (TIMx_CCR1) or not.
0: Capture disabled.
1: Capture enabled.

Table 102. Output control bit for standard OCx channels

CCxE bit	OCx output state
0	Output disabled (OCx='0', OCx_EN='0')
1	OCx=OCxREF + Polarity, OCx_EN='1'

Note: The states of the external I/O pins connected to the standard OCx channels depend on the state of the OCx channel and on the GPIO registers.

19.4.8 TIM9/12 counter (TIMx_CNT)

Address offset: 0x24

Reset value: 0x0000

15	14	13	12	11	10	9	8	7	6	5	4	3	2	1	0
CNT[15:0]															
rw	rw	rw	rw	rw	rw	rw	rw	rw	rw	rw	rw	rw	rw	rw	rw

Bits 15:0 **CNT[15:0]**: Counter value

19.4.9 TIM9/12 prescaler (TIMx_PSC)

Address offset: 0x28

Reset value: 0x0000

15	14	13	12	11	10	9	8	7	6	5	4	3	2	1	0
PSC[15:0]															
rw	rw	rw	rw	rw	rw	rw	rw	rw	rw	rw	rw	rw	rw	rw	rw

Bits 15:0 **PSC[15:0]**: Prescaler value

The counter clock frequency CK_CNT is equal to f_{CK_PSC} / (PSC[15:0] + 1).
PSC contains the value to be loaded in the active prescaler register at each update event (including when the counter is cleared through UG bit of TIMx_EGR register or through trigger controller when configured in "reset mode").

19.4.10 TIM9/12 auto-reload register (TIMx_ARR)

Address offset: 0x2C

Reset value: 0xFFFF

15	14	13	12	11	10	9	8	7	6	5	4	3	2	1	0
ARR[15:0]															
rw	rw	rw	rw	rw	rw	rw	rw	rw	rw	rw	rw	rw	rw	rw	rw

Bits 15:0 **ARR[15:0]**: Auto-reload value

ARR is the value to be loaded into the actual auto-reload register.
Refer to the *Section 19.3.1: Time-base unit* for more details about ARR update and behavior.
The counter is blocked while the auto-reload value is null.

19.4.11 TIM9/12 capture/compare register 1 (TIMx_CCR1)

Address offset: 0x34

Reset value: 0x0000

15	14	13	12	11	10	9	8	7	6	5	4	3	2	1	0
CCR1[15:0]															
rw/ro	rw/ro	rw/ro	rw/ro	rw/ro	rw/ro	rw/ro	rw/ro	rw/ro	rw/ro	rw/ro	rw/ro	rw/ro	rw/ro	rw/ro	rw/ro

Bits 15:0 **CCR1[15:0]**: Capture/Compare 1 value

If channel CC1 is configured as output:
CCR1 is the value to be loaded into the actual capture/compare 1 register (preload value). It is loaded permanently if the preload feature is not selected in the TIMx_CCMR1 register (OC1PE bit). Else the preload value is copied into the active capture/compare 1 register when an update event occurs.
The active capture/compare register contains the value to be compared to the TIMx_CNT counter and signaled on the OC1 output.
If channel CC1is configured as input:
CCR1 is the counter value transferred by the last input capture 1 event (IC1). The TIMx_CCR1 register is read-only and cannot be programmed.

19.4.12 TIM9/12 capture/compare register 2 (TIMx_CCR2)

Address offset: 0x38

Reset value: 0x0000

15	14	13	12	11	10	9	8	7	6	5	4	3	2	1	0
CCR2[15:0]															
rw/ro	rw/ro	rw/ro	rw/ro	rw/ro	rw/ro	rw/ro	rw/ro	rw/ro	rw/ro	rw/ro	rw/ro	rw/ro	rw/ro	rw/ro	rw/ro

Bits 15:0 **CCR2[15:0]**: Capture/Compare 2 value

If channel CC2 is configured as output:
CCR2 is the value to be loaded into the actual capture/compare 2 register (preload value). It is loaded permanently if the preload feature is not selected in the TIMx_CCMR2 register (OC2PE bit). Else the preload value is copied into the active capture/compare 2 register when an update event occurs.
The active capture/compare register contains the value to be compared to the TIMx_CNT counter and signalled on the OC2 output.
If channel CC2 is configured as input:
CCR2 is the counter value transferred by the last input capture 2 event (IC2). The TIMx_CCR2 register is read-only and cannot be programmed.

19.4.13 TIM9/12 register map

TIM9/12 registers are mapped as 16-bit addressable registers as described below. The reserved memory areas are highlighted in gray in the table.

Table 103. TIM9/12 register map and reset values

Offset	Register	31	30	29	28	27	26	25	24	23	22	21	20	19	18	17	16	15	14	13	12	11	10	9	8	7	6	5	4	3	2	1	0
0x00	**TIMx_CR1**	Reserved																						CKD [1:0]		ARPE	Reserved			OPM	URS	UDIS	CEN
	Reset value																							0	0	0				0	0	0	0
0x08	**TIMx_SMCR**	Reserved																								MSM	TS[2:0]			Reserved	SMS[2:0]		
	Reset value																									0	0	0	0		0	0	0
0x0C	**TIMx_DIER**	Reserved																									TIE	Reserved			CC2IE	CC1IE	UIE
	Reset value																										0				0	0	0
0x10	**TIMx_SR**	Reserved																					CC2OF	CC1OF	Reserved		TIF	Reserved			CC2IF	CC1IF	UIF
	Reset value																						0	0			0				0	0	0
0x14	**TIMx_EGR**	Reserved																									TG	Reserved			CC2G	CC1G	UG
	Reset value																										0				0	0	0
0x18	**TIMx_CCMR1** Output Compare mode	Reserved																	OC2M [2:0]			OC2PE	OC2FE	CC2S [1:0]		Reserved	OC1M [2:0]			OC1PE	OC1FE	CC1S [1:0]	
	Reset value																		0	0	0	0	0	0	0		0	0	0	0	0	0	0
	TIMx_CCMR1 Input Capture mode	Reserved																IC2F[3:0]				IC2PSC [1:0]		CC2S [1:0]		IC1F[3:0]				IC1PSC [1:0]		CC1S [1:0]	
	Reset value																	0	0	0	0	0	0	0	0	0	0	0	0	0	0	0	0
0x1C	Reserved																																
0x20	**TIMx_CCER**	Reserved																								CC2NP	Reserved	CC2P	CC2E	CC1NP	Reserved	CC1P	CC1E
	Reset value																									0		0	0	0		0	0
0x24	**TIMx_CNT**	Reserved																CNT[15:0]															
	Reset value																	0	0	0	0	0	0	0	0	0	0	0	0	0	0	0	0
0x28	**TIMx_PSC**	Reserved																PSC[15:0]															
	Reset value																	0	0	0	0	0	0	0	0	0	0	0	0	0	0	0	0
0x2C	**TIMx_ARR**	Reserved																ARR[15:0]															
	Reset value																	0	0	0	0	0	0	0	0	0	0	0	0	0	0	0	0
0x30	Reserved																																
0x34	**TIMx_CCR1**	Reserved																CCR1[15:0]															
	Reset value																	0	0	0	0	0	0	0	0	0	0	0	0	0	0	0	0

Table 103. TIM9/12 register map and reset values (continued)

Offset	Register	31	30	29	28	27	26	25	24	23	22	21	20	19	18	17	16	15	14	13	12	11	10	9	8	7	6	5	4	3	2	1	0
0x38	**TIMx_CCR2**	Reserved																CCR2[15:0]															
	Reset value																	0	0	0	0	0	0	0	0	0	0	0	0	0	0	0	0
0x3C to 0x4C	Reserved																																

Refer to *Section 2.3: Memory map* for the register boundary addresses.

19.5 TIM10/11/13/14 registers

The peripheral registers have to be written by half-words (16 bits) or words (32 bits). Read accesses can be done by bytes (8 bits), half-words (16 bits) or words (32 bits).

19.5.1 TIM10/11/13/14 control register 1 (TIMx_CR1)

Address offset: 0x00

Reset value: 0x0000

15	14	13	12	11	10	9	8	7	6	5	4	3	2	1	0
Reserved						CKD[1:0]		ARPE	Reserved			OPM	URS	UDIS	CEN
						rw	rw	rw				rw	rw	rw	rw

Bits 15:10 Reserved, must be kept at reset value.

Bits 9:8 **CKD**: Clock division

This bit-field indicates the division ratio between the timer clock (CK_INT) frequency and sampling clock used by the digital filters (TIx),

00: $t_{DTS} = t_{CK_INT}$
01: $t_{DTS} = 2 \times t_{CK_INT}$
10: $t_{DTS} = 4 \times t_{CK_INT}$
11: Reserved

Bit 7 **ARPE**: Auto-reload preload enable

0: TIMx_ARR register is not buffered
1: TIMx_ARR register is buffered

Bits 6:4 Reserved, must be kept at reset value.

Bit 3 **OPM**: One-pulse mode

0: Counter is not stopped on the update event
1: Counter stops counting on the next update event (clearing the CEN bit).

Bit 2 **URS**: Update request source

This bit is set and cleared by software to select the update interrupt (UEV) sources.

0: Any of the following events generate an UEV if enabled:

- Counter overflow
- Setting the UG bit

1: Only counter overflow generates an UEV if enabled.

Bit 1 **UDIS**: Update disable

This bit is set and cleared by software to enable/disable update interrupt (UEV) event generation.

0: UEV enabled. An UEV is generated by one of the following events:

- Counter overflow
- Setting the UG bit.

Buffered registers are then loaded with their preload values.

1: UEV disabled. No UEV is generated, shadow registers keep their value (ARR, PSC, CCRx). The counter and the prescaler are reinitialized if the UG bit is set.

Bit 0 **CEN**: Counter enable

0: Counter disabled
1: Counter enabled

19.5.2 TIM10/11/13/14 Interrupt enable register (TIMx_DIER)

Address offset: 0x0C

Reset value: 0x0000

15	14	13	12	11	10	9	8	7	6	5	4	3	2	1	0
Reserved														CC1IE	UIE
														rw	rw

Bits 15:2 Reserved, must be kept at reset value.

Bit 1 **CC1IE**: Capture/Compare 1 interrupt enable
0: CC1 interrupt disabled
1: CC1 interrupt enabled

Bit 0 **UIE**: Update interrupt enable
0: Update interrupt disabled
1: Update interrupt enabled

19.5.3 TIM10/11/13/14 status register (TIMx_SR)

Address offset: 0x10

Reset value: 0x0000

15	14	13	12	11	10	9	8	7	6	5	4	3	2	1	0
Reserved						CC1OF	Reserved							CC1IF	UIF
						rc_w0								rc_w0	rc_w0

Bits 15:10 Reserved, must be kept at reset value.

Bit 9 **CC1OF**: Capture/Compare 1 overcapture flag
This flag is set by hardware only when the corresponding channel is configured in input capture mode. It is cleared by software by writing it to ‘0’.
0: No overcapture has been detected.
1: The counter value has been captured in TIMx_CCR1 register while CC1IF flag was already set

Bits 8:2 Reserved, must be kept at reset value.

Bit 1 **CC1IF**: Capture/compare 1 interrupt flag
If channel CC1 is configured as output:
This flag is set by hardware when the counter matches the compare value. It is cleared by software.
0: No match.
1: The content of the counter TIMx_CNT matches the content of the TIMx_CCR1 register. When the contents of TIMx_CCR1 are greater than the contents of TIMx_ARR, the CC1IF bit goes high on the counter overflow.
If channel CC1 is configured as input:
This bit is set by hardware on a capture. It is cleared by software or by reading the TIMx_CCR1 register.
0: No input capture occurred.
1: The counter value has been captured in TIMx_CCR1 register (an edge has been detected on IC1 which matches the selected polarity).

Bit 0 **UIF**: Update interrupt flag

This bit is set by hardware on an update event. It is cleared by software.

0: No update occurred.

1: Update interrupt pending. This bit is set by hardware when the registers are updated:

- At overflow and if UDIS=’0’ in the TIMx_CR1 register.
- When CNT is reinitialized by software using the UG bit in TIMx_EGR register, if URS=’0’ and UDIS=’0’ in the TIMx_CR1 register.

19.5.4 TIM10/11/13/14 event generation register (TIMx_EGR)

Address offset: 0x14

Reset value: 0x0000

15	14	13	12	11	10	9	8	7	6	5	4	3	2	1	0
Reserved														CC1G	UG
														w	w

Bits 15:2 Reserved, must be kept at reset value.

Bit 1 **CC1G**: Capture/compare 1 generation

This bit is set by software in order to generate an event, it is automatically cleared by hardware.

0: No action

1: A capture/compare event is generated on channel 1:

If channel CC1 is configured as output:

CC1IF flag is set, Corresponding interrupt or is sent if enabled.

If channel CC1 is configured as input:

The current value of the counter is captured in TIMx_CCR1 register. The CC1IF flag is set, the corresponding interrupt is sent if enabled. The CC1OF flag is set if the CC1IF flag was already high.

Bit 0 **UG**: Update generation

This bit can be set by software, it is automatically cleared by hardware.

0: No action

1: Re-initialize the counter and generates an update of the registers. Note that the prescaler counter is cleared too (anyway the prescaler ratio is not affected). The counter is cleared.

19.5.5 TIM10/11/13/14 capture/compare mode register 1 (TIMx_CCMR1)

Address offset: 0x18

Reset value: 0x0000

The channels can be used in input (capture mode) or in output (compare mode). The direction of a channel is defined by configuring the corresponding CCxS bits. All the other bits of this register have a different function in input and in output mode. For a given bit, OCxx describes its function when the channel is configured in output, ICxx describes its function when the channel is configured in input. So take care that the same bit can have a different meaning for the input stage and for the output stage.

15	14	13	12	11	10	9	8	7	6	5	4	3	2	1	0
Reserved									OC1M[2:0]			OC1PE	OC1FE	CC1S[1:0]	
Reserved								IC1F[3:0]				IC1PSC[1:0]			
								rw	rw	rw	rw	rw	rw	rw	rw

Output compare mode

Bits 15:7 Reserved, must be kept at reset value.

Bits 6:4 **OC1M**: Output compare 1 mode

These bits define the behavior of the output reference signal OC1REF from which OC1 is derived. OC1REF is active high whereas OC1 active level depends on CC1P bit.

000: Frozen. The comparison between the output compare register TIMx_CCR1 and the counter TIMx_CNT has no effect on the outputs.

001: Set channel 1 to active level on match. OC1REF signal is forced high when the counter TIMx_CNT matches the capture/compare register 1 (TIMx_CCR1).

010: Set channel 1 to inactive level on match. OC1REF signal is forced low when the counter TIMx_CNT matches the capture/compare register 1 (TIMx_CCR1).

011: Toggle - OC1REF toggles when TIMx_CNT = TIMx_CCR1.

100: Force inactive level - OC1REF is forced low.

101: Force active level - OC1REF is forced high.

110: PWM mode 1 - Channel 1 is active as long as TIMx_CNT < TIMx_CCR1 else inactive.

111: PWM mode 2 - Channel 1 is inactive as long as TIMx_CNT < TIMx_CCR1 else active.

Note: In PWM mode 1 or 2, the OCREF level changes when the result of the comparison changes or when the output compare mode switches from frozen to PWM mode.

Bit 3 **OC1PE**: Output compare 1 preload enable

0: Preload register on TIMx_CCR1 disabled. TIMx_CCR1 can be written at anytime, the new value is taken in account immediately.

1: Preload register on TIMx_CCR1 enabled. Read/Write operations access the preload register. TIMx_CCR1 preload value is loaded in the active register at each update event.

Note: The PWM mode can be used without validating the preload register only in one pulse mode (OPM bit set in TIMx_CR1 register). Else the behavior is not guaranteed.

Bit 2 **OC1FE**: Output compare 1 fast enable

This bit is used to accelerate the effect of an event on the trigger in input on the CC output.

0: CC1 behaves normally depending on counter and CCR1 values even when the trigger is ON. The minimum delay to activate CC1 output when an edge occurs on the trigger input is 5 clock cycles.

1: An active edge on the trigger input acts like a compare match on CC1 output. OC is then set to the compare level independently of the result of the comparison. Delay to sample the trigger input and to activate CC1 output is reduced to 3 clock cycles. OC1FE acts only if the channel is configured in PWM1 or PWM2 mode.

Bits 1:0 **CC1S**: Capture/Compare 1 selection

This bit-field defines the direction of the channel (input/output) as well as the used input.

00: CC1 channel is configured as output.

01: CC1 channel is configured as input, IC1 is mapped on TI1.

10:

11:

Note: CC1S bits are writable only when the channel is OFF (CC1E = 0 in TIMx_CCER).

Input capture mode

Bits 15:8 Reserved, must be kept at reset value.

Bits 7:4 **IC1F**: Input capture 1 filter

This bit-field defines the frequency used to sample TI1 input and the length of the digital filter applied to TI1. The digital filter is made of an event counter in which N consecutive events are needed to validate a transition on the output:

0000: No filter, sampling is done at f_{DTS}
0001: $f_{SAMPLING}=f_{CK_INT}$, N=2
0010: $f_{SAMPLING}=f_{CK_INT}$, N=4
0011: $f_{SAMPLING}=f_{CK_INT}$, N=8
0100: $f_{SAMPLING}=f_{DTS}/2$, N=6
0101: $f_{SAMPLING}=f_{DTS}/2$, N=8
0110: $f_{SAMPLING}=f_{DTS}/4$, N=6
0111: $f_{SAMPLING}=f_{DTS}/4$, N=8
1000: $f_{SAMPLING}=f_{DTS}/8$, N=6
1001: $f_{SAMPLING}=f_{DTS}/8$, N=8
1010: $f_{SAMPLING}=f_{DTS}/16$, N=5
1011: $f_{SAMPLING}=f_{DTS}/16$, N=6
1100: $f_{SAMPLING}=f_{DTS}/16$, N=8
1101: $f_{SAMPLING}=f_{DTS}/32$, N=5
1110: $f_{SAMPLING}=f_{DTS}/32$, N=6
1111: $f_{SAMPLING}=f_{DTS}/32$, N=8

Bits 3:2 **IC1PSC**: Input capture 1 prescaler

This bit-field defines the ratio of the prescaler acting on CC1 input (IC1).
The prescaler is reset as soon as CC1E='0' (TIMx_CCER register).
00: no prescaler, capture is done each time an edge is detected on the capture input
01: capture is done once every 2 events
10: capture is done once every 4 events
11: capture is done once every 8 events

Bits 1:0 **CC1S**: Capture/Compare 1 selection

This bit-field defines the direction of the channel (input/output) as well as the used input.
00: CC1 channel is configured as output
01: CC1 channel is configured as input, IC1 is mapped on TI1
10: Reserved
11: Reserved

Note: CC1S bits are writable only when the channel is OFF (CC1E = 0 in TIMx_CCER).

19.5.6 TIM10/11/13/14 capture/compare enable register (TIMx_CCER)

Address offset: 0x20

Reset value: 0x0000

15	14	13	12	11	10	9	8	7	6	5	4	3	2	1	0
Reserved												CC1NP	Res.	CC1P	CC1E
												rw		rw	rw

Bits 15:4 Reserved, must be kept at reset value.

Bit 3 **CC1NP**: Capture/Compare 1 complementary output Polarity.
CC1 channel configured as output: CC1NP must be kept cleared.
CC1 channel configured as input: CC1NP bit is used in conjunction with CC1P to define TI1FP1 polarity (refer to CC1P description).

Bit 2 Reserved, must be kept at reset value.

Bit 1 **CC1P**: Capture/Compare 1 output Polarity.
CC1 channel configured as output:
0: OC1 active high
1: OC1 active low
CC1 channel configured as input:
The CC1P bit selects TI1FP1 and TI2FP1 polarity for trigger or capture operations.
00: noninverted/rising edge
Circuit is sensitive to TI1FP1 rising edge (capture mode), TI1FP1 is not inverted.
01: inverted/falling edge
Circuit is sensitive to TI1FP1 falling edge (capture mode), TI1FP1 is inverted.
10: reserved, do not use this configuration.
11: noninverted/both edges
Circuit is sensitive to both TI1FP1 rising and falling edges (capture mode), TI1FP1 is not inverted.

Bit 0 **CC1E**: Capture/Compare 1 output enable.
CC1 channel configured as output:
0: Off - OC1 is not active
1: On - OC1 signal is output on the corresponding output pin
CC1 channel configured as input:
This bit determines if a capture of the counter value can actually be done into the input capture/compare register 1 (TIMx_CCR1) or not.
0: Capture disabled
1: Capture enabled

Table 104. Output control bit for standard OCx channels

CCxE bit	OCx output state
0	Output Disabled (OCx=’0’, OCx_EN=’0’)
1	OCx=OCxREF + Polarity, OCx_EN=’1’

Note: The state of the external I/O pins connected to the standard OCx channels depends on the OCx channel state and the GPIO registers.

19.5.7 TIM10/11/13/14 counter (TIMx_CNT)

Address offset: 0x24

Reset value: 0x0000

15	14	13	12	11	10	9	8	7	6	5	4	3	2	1	0
CNT[15:0]															
rw	rw	rw	rw	rw	rw	rw	rw	rw	rw	rw	rw	rw	rw	rw	rw

Bits 15:0 **CNT[15:0]**: Counter value

19.5.8 TIM10/11/13/14 prescaler (TIMx_PSC)

Address offset: 0x28

Reset value: 0x0000

15	14	13	12	11	10	9	8	7	6	5	4	3	2	1	0
PSC[15:0]															
rw	rw	rw	rw	rw	rw	rw	rw	rw	rw	rw	rw	rw	rw	rw	rw

Bits 15:0 **PSC[15:0]**: Prescaler value

The counter clock frequency CK_CNT is equal to f_{CK_PSC} / (PSC[15:0] + 1).

PSC contains the value to be loaded in the active prescaler register at each update event (including when the counter is cleared through UG bit of TIMx_EGR register or through trigger controller when configured in “reset mode”).

19.5.9 TIM10/11/13/14 auto-reload register (TIMx_ARR)

Address offset: 0x2C

Reset value: 0xFFFF

15	14	13	12	11	10	9	8	7	6	5	4	3	2	1	0
ARR[15:0]															
rw	rw	rw	rw	rw	rw	rw	rw	rw	rw	rw	rw	rw	rw	rw	rw

Bits 15:0 **ARR[15:0]**: Auto-reload value

ARR is the value to be loaded in the actual auto-reload register.

Refer to *Section 19.3.1: Time-base unit* for more details about ARR update and behavior.

The counter is blocked while the auto-reload value is null.

19.5.10 TIM10/11/13/14 capture/compare register 1 (TIMx_CCR1)

Address offset: 0x34

Reset value: 0x0000

15	14	13	12	11	10	9	8	7	6	5	4	3	2	1	0
CCR1[15:0]															
rw/ro	rw/ro	rw/ro	rw/ro	rw/ro	rw/ro	rw/ro	rw/ro	rw/ro	rw/ro	rw/ro	rw/ro	rw/ro	rw/ro	rw/ro	rw/ro

Bits 15:0 **CCR1[15:0]**: Capture/Compare 1 value

If channel CC1 is configured as output:

CCR1 is the value to be loaded in the actual capture/compare 1 register (preload value).

It is loaded permanently if the preload feature is not selected in the TIMx_CCMR1 register (bit OC1PE). Else the preload value is copied in the active capture/compare 1 register when an update event occurs.

The active capture/compare register contains the value to be compared to the counter TIMx_CNT and signaled on OC1 output.

If channel CC1is configured as input:

CCR1 is the counter value transferred by the last input capture 1 event (IC1). The TIMx_CCR1 register is read-only and cannot be programmed.

19.5.11 TIM11 option register 1 (TIM11_OR)

Address offset: 0x50

Reset value: 0x0000

15	14	13	12	11	10	9	8	7	6	5	4	3	2	1	0
Reserved														TI1_RMP[1:0]	
														rw	

Bits 15:2 Reserved, must be kept at reset value.

Bits 1:0 **TI1_RMP[1:0]**: TIM11 Input 1 remapping capability

Set and cleared by software.

00,01,11: TIM11 Channel1 is connected to the GPIO (refer to the Alternate function mapping table in the datasheets).

10: HSE_RTC clock (HSE divided by programmable prescaler) is connected to the TIM11_CH1 input for measurement purposes

19.5.12 TIM10/11/13/14 register map

TIMx registers are mapped as 16-bit addressable registers as described in the table below.

Table 105. TIM10/11/13/14 register map and reset values

Offset	Register	31	30	29	28	27	26	25	24	23	22	21	20	19	18	17	16	15	14	13	12	11	10	9	8	7	6	5	4	3	2	1	0
0x00	**TIMx_CR1**	Reserved																						CKD [1:0]		ARPE	Reserved			OPM	URS	UDIS	CEN
	Reset value																							0	0	0				0	0	0	0
0x08	**TIMx_SMCR**	Reserved																															
	Reset value																																
0x0C	**TIMx_DIER**	Reserved																														CC1IE	UIE
	Reset value																															0	0
0x10	**TIMx_SR**	Reserved																						CC1OF	Reserved							CC1IF	UIF
	Reset value																							0								0	0
0x14	**TIMx_EGR**	Reserved																														CC1G	UG
	Reset value																															0	0
0x18	**TIMx_CCMR1** Output compare mode	Reserved																									OC1M [2:0]			OC1PE	OC1FE	CC1S [1:0]	
	Reset value																										0	0	0	0	0	0	0
	TIMx_CCMR1 Input capture mode	Reserved																								IC1F[3:0]				IC1 PSC [1:0]		CC1S [1:0]	
	Reset value																									0	0	0	0	0	0	0	0
0x1C	Reserved																																
0x20	**TIMx_CCER**	Reserved																												CC1NP	Reserved	CC1P	CC1E
	Reset value																													0		0	0
0x24	**TIMx_CNT**	Reserved																CNT[15:0]															
	Reset value																	0	0	0	0	0	0	0	0	0	0	0	0	0	0	0	0
0x28	**TIMx_PSC**	Reserved																PSC[15:0]															
	Reset value																	0	0	0	0	0	0	0	0	0	0	0	0	0	0	0	0
0x2C	**TIMx_ARR**	Reserved																ARR[15:0]															
	Reset value																	0	0	0	0	0	0	0	0	0	0	0	0	0	0	0	0
0x30	Reserved																																
0x34	**TIMx_CCR1**	Reserved																CCR1[15:0]															
	Reset value																	0	0	0	0	0	0	0	0	0	0	0	0	0	0	0	0
0x38 to 0x4C	Reserved																																

Table 105. TIM10/11/13/14 register map and reset values (continued)

Offset	Register	31	30	29	28	27	26	25	24	23	22	21	20	19	18	17	16	15	14	13	12	11	10	9	8	7	6	5	4	3	2	1	0
0x50	TIMx_OR	Reserved																														TI1_RMP	
	Reset value																															0	0

Refer to *Section 2.3: Memory map* for the register boundary addresses.

20 Basic timers (TIM6 and TIM7)

This section applies to the whole STM32F4xx family, unless otherwise specified.

20.1 TIM6 and TIM7 introduction

The basic timers TIM6 and TIM7 consist of a 16-bit auto-reload counter driven by a programmable prescaler.

They may be used as generic timers for time-base generation but they are also specifically used to drive the digital-to-analog converter (DAC). In fact, the timers are internally connected to the DAC and are able to drive it through their trigger outputs.

The timers are completely independent, and do not share any resources.

20.2 TIM6 and TIM7 main features

Basic timer (TIM6 and TIM7) features include:

- 16-bit auto-reload upcounter
- 16-bit programmable prescaler used to divide (also “on the fly”) the counter clock frequency by any factor between 1 and 65536
- Synchronization circuit to trigger the DAC
- Interrupt/DMA generation on the update event: counter overflow

Figure 203. Basic timer block diagram

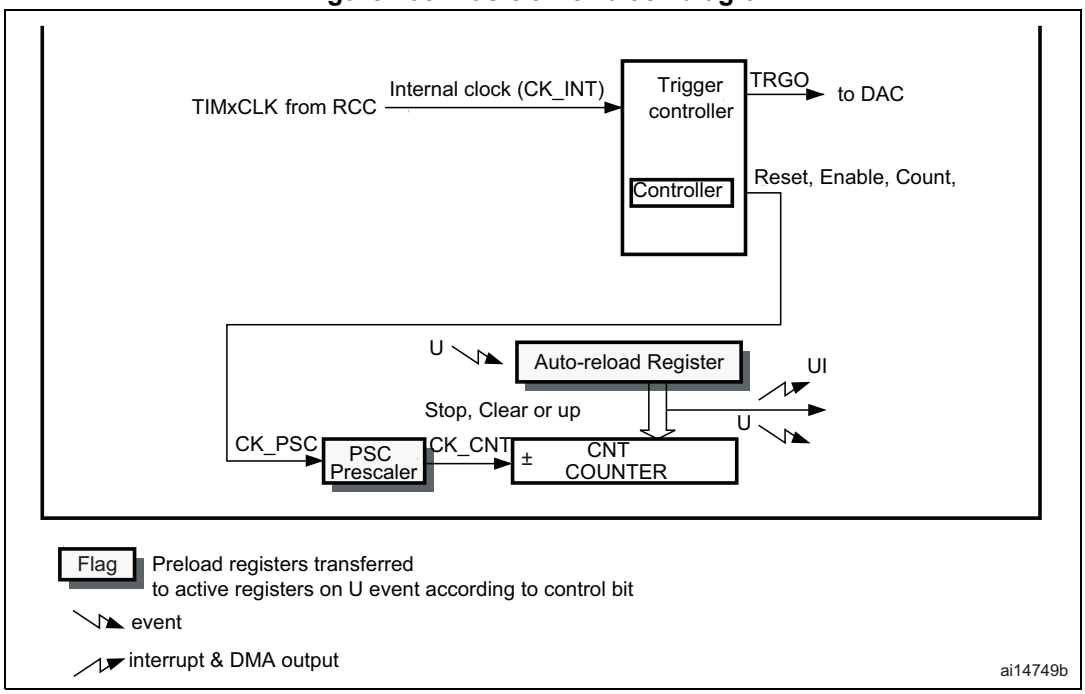

20.3 TIM6 and TIM7 functional description

20.3.1 Time-base unit

The main block of the programmable timer is a 16-bit upcounter with its related auto-reload register. The counter clock can be divided by a prescaler.

The counter, the auto-reload register and the prescaler register can be written or read by software. This is true even when the counter is running.

The time-base unit includes:

- Counter Register (TIMx_CNT)
- Prescaler Register (TIMx_PSC)
- Auto-Reload Register (TIMx_ARR)

The auto-reload register is preloaded. The preload register is accessed each time an attempt is made to write or read the auto-reload register. The contents of the preload register are transferred into the shadow register permanently or at each update event UEV, depending on the auto-reload preload enable bit (ARPE) in the TIMx_CR1 register. The update event is sent when the counter reaches the overflow value and if the UDIS bit equals 0 in the TIMx_CR1 register. It can also be generated by software. The generation of the update event is described in detail for each configuration.

The counter is clocked by the prescaler output CK_CNT, which is enabled only when the counter enable bit (CEN) in the TIMx_CR1 register is set.

Note that the actual counter enable signal CNT_EN is set 1 clock cycle after CEN.

Prescaler description

The prescaler can divide the counter clock frequency by any factor between 1 and 65536. It is based on a 16-bit counter controlled through a 16-bit register (in the TIMx_PSC register). It can be changed on the fly as the TIMx_PSC control register is buffered. The new prescaler ratio is taken into account at the next update event.

Figure 204 and *Figure 205* give some examples of the counter behavior when the prescaler ratio is changed on the fly.

Figure 204. Counter timing diagram with prescaler division change from 1 to 2

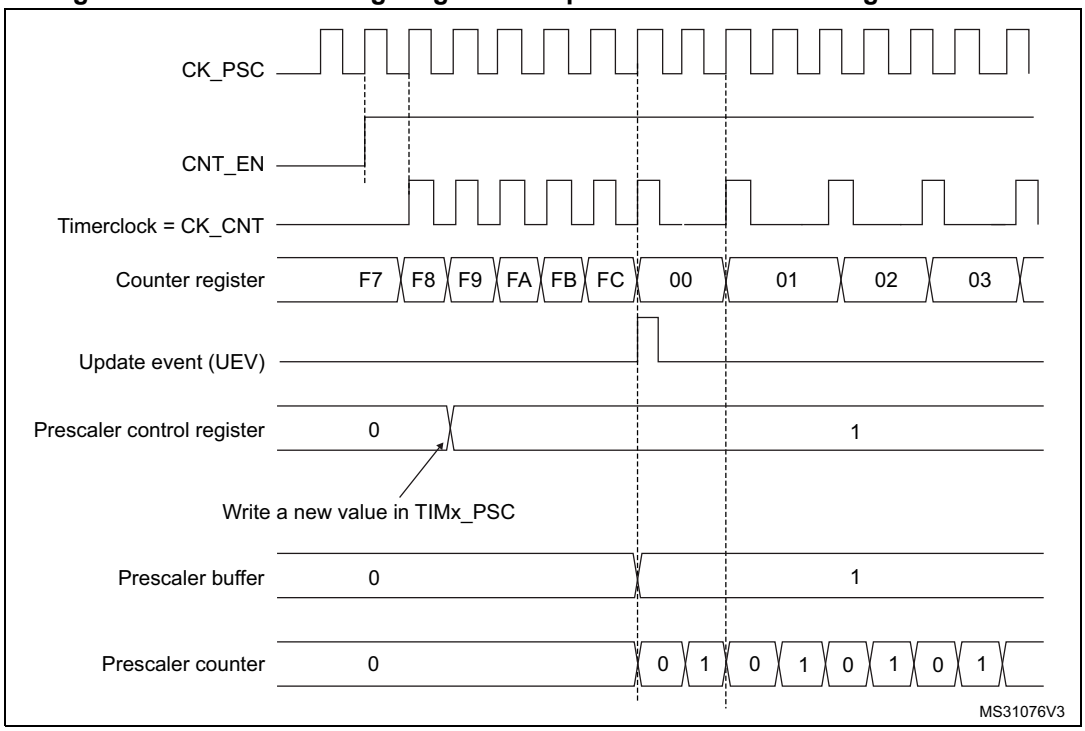

Figure 205. Counter timing diagram with prescaler division change from 1 to 4

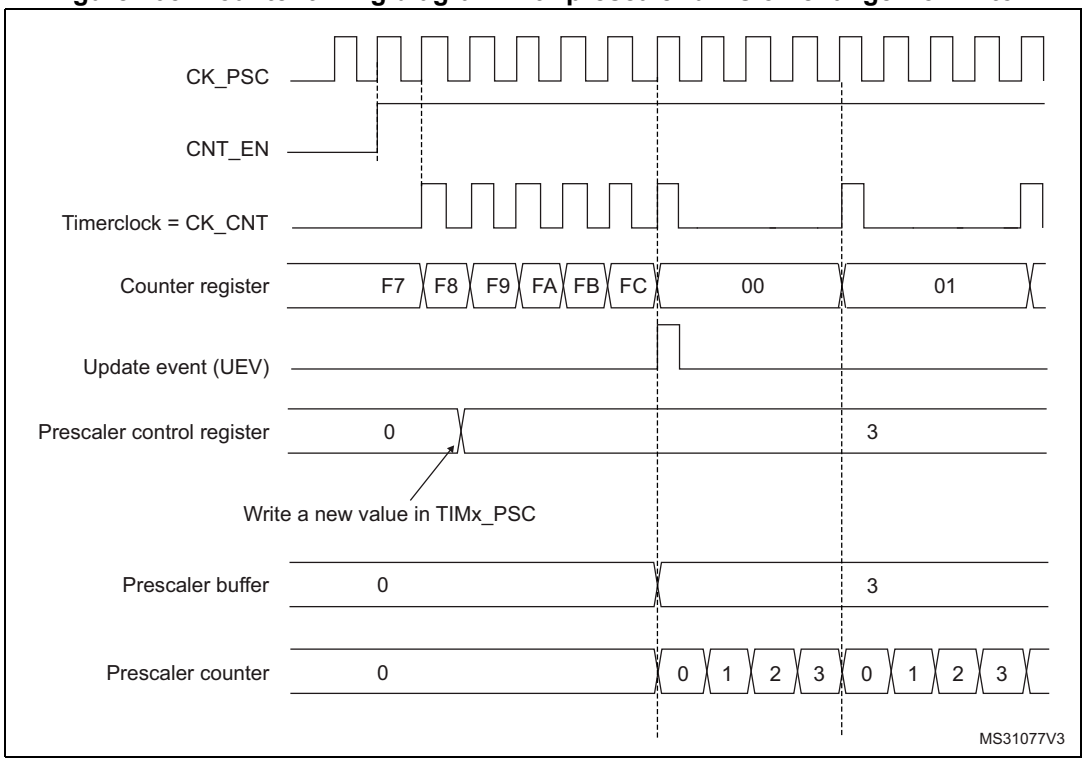

20.3.2 Counting mode

The counter counts from 0 to the auto-reload value (contents of the TIMx_ARR register), then restarts from 0 and generates a counter overflow event.

An update event can be generate at each counter overflow or by setting the UG bit in the TIMx_EGR register (by software or by using the slave mode controller).

The UEV event can be disabled by software by setting the UDIS bit in the TIMx_CR1 register. This avoids updating the shadow registers while writing new values into the preload registers. In this way, no update event occurs until the UDIS bit has been written to 0, however, the counter and the prescaler counter both restart from 0 (but the prescale rate does not change). In addition, if the URS (update request selection) bit in the TIMx_CR1 register is set, setting the UG bit generates an update event UEV, but the UIF flag is not set (so no interrupt or DMA request is sent).

When an update event occurs, all the registers are updated and the update flag (UIF bit in the TIMx_SR register) is set (depending on the URS bit):

- The buffer of the prescaler is reloaded with the preload value (contents of the TIMx_PSC register)
- The auto-reload shadow register is updated with the preload value (TIMx_ARR)

The following figures show some examples of the counter behavior for different clock frequencies when TIMx_ARR = 0x36.

Figure 206. Counter timing diagram, internal clock divided by 1

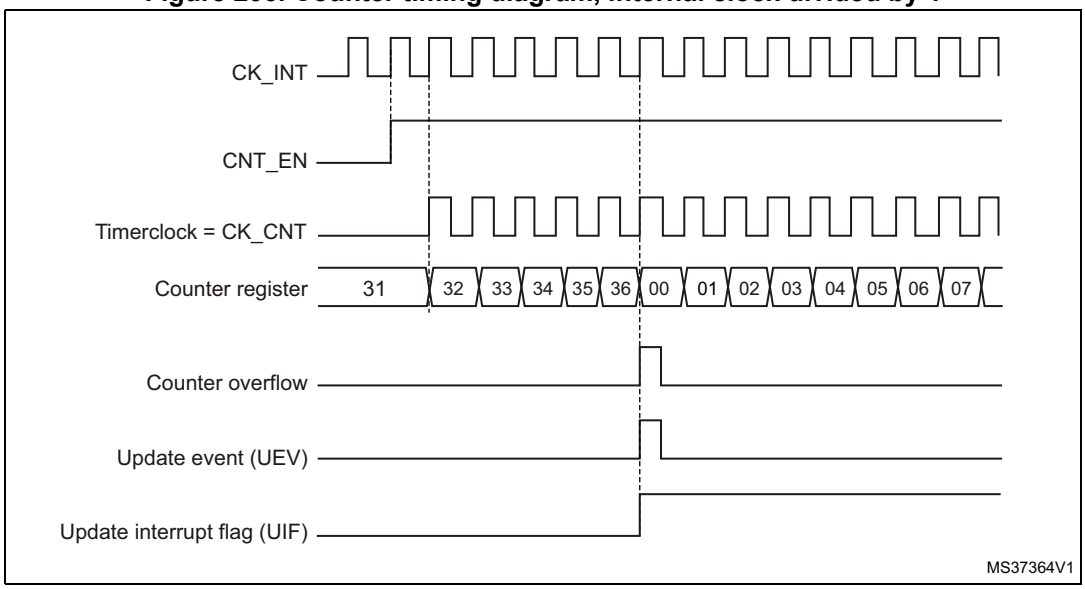

Figure 207. Counter timing diagram, internal clock divided by 2

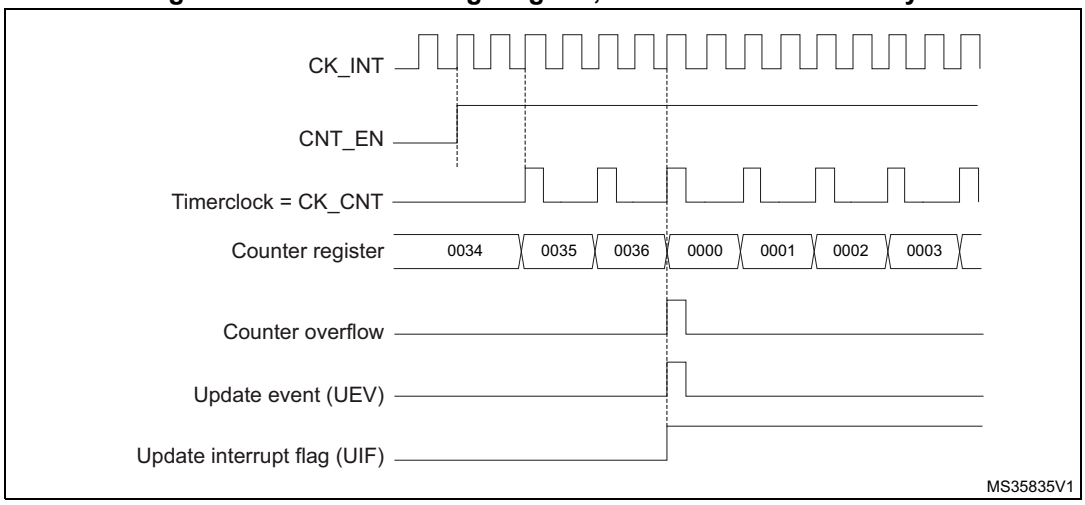

Figure 208. Counter timing diagram, internal clock divided by 4

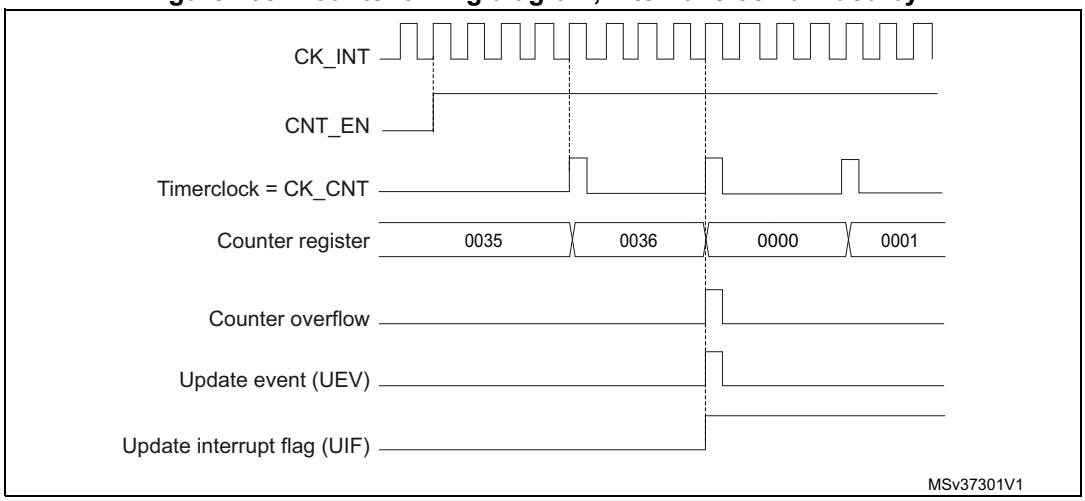

Figure 209. Counter timing diagram, internal clock divided by N

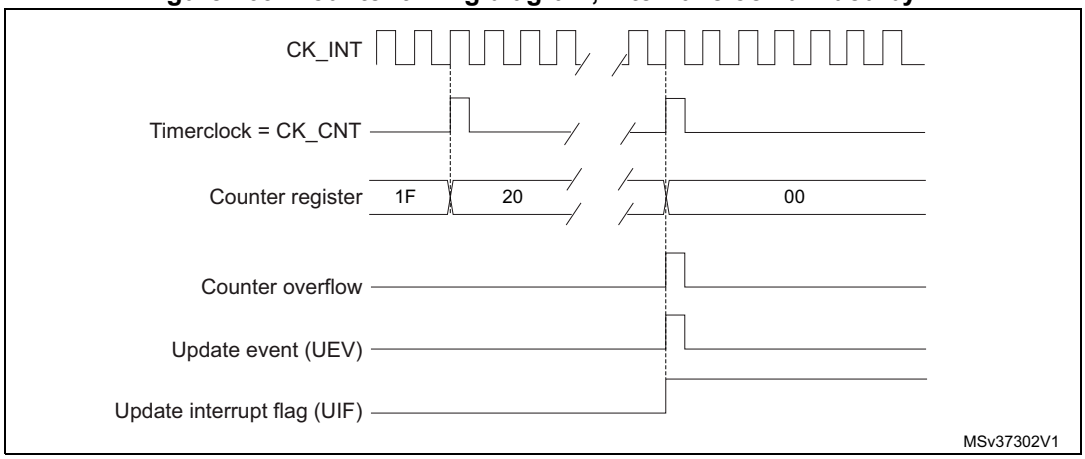

Figure 210. Counter timing diagram, update event when ARPE=0 (TIMx_ARR not preloaded)

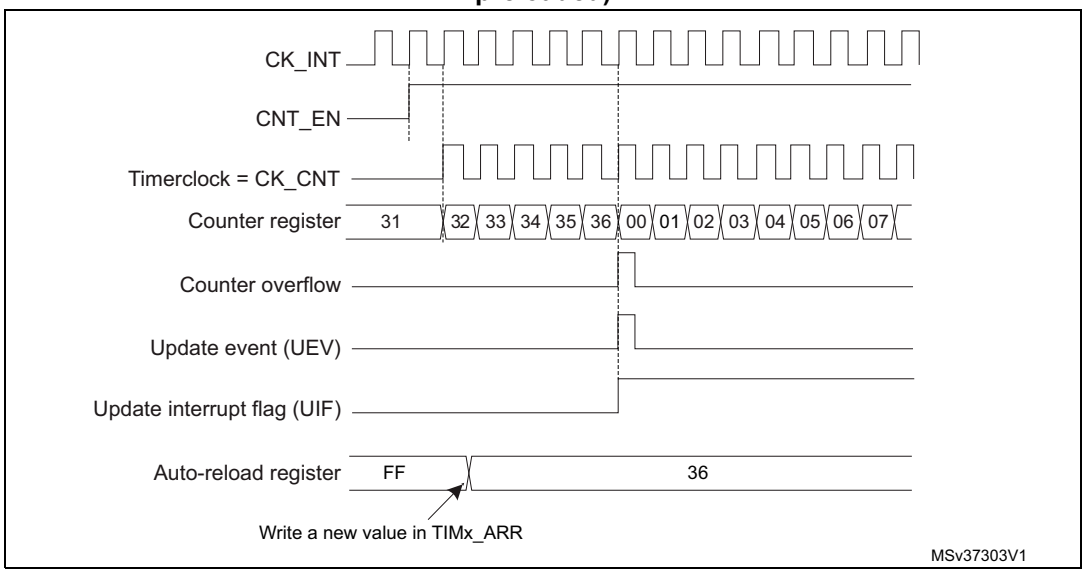

Figure 211. Counter timing diagram, update event when ARPE=1 (TIMx_ARR preloaded)

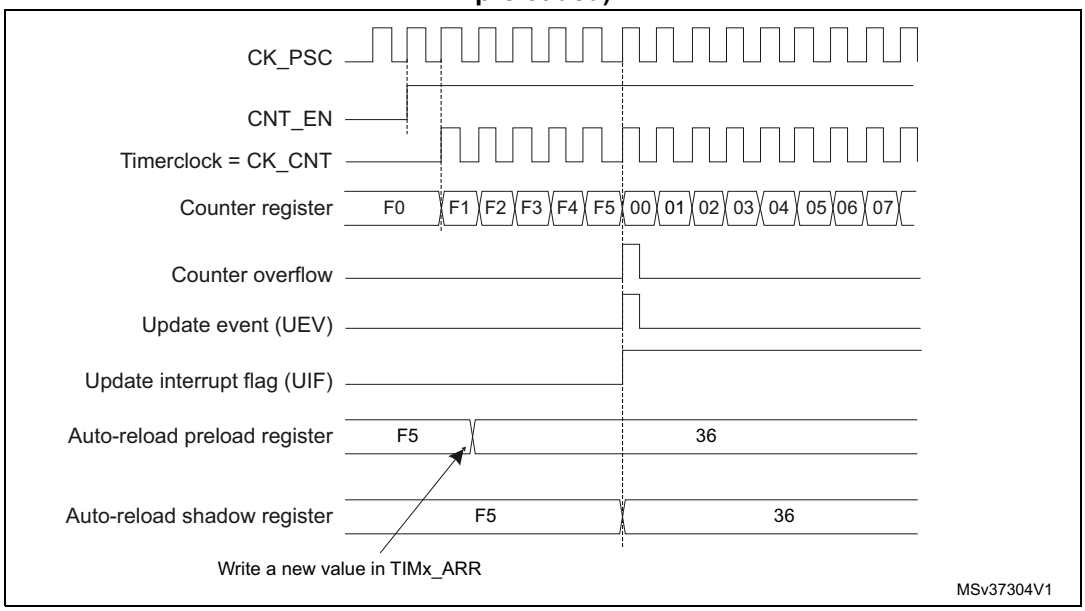

20.3.3 Clock source

The counter clock is provided by the Internal clock (CK_INT) source.

The CEN (in the TIMx_CR1 register) and UG bits (in the TIMx_EGR register) are actual control bits and can be changed only by software (except for UG that remains cleared automatically). As soon as the CEN bit is written to 1, the prescaler is clocked by the internal clock CK_INT.

Figure 212 shows the behavior of the control circuit and the upcounter in normal mode, without prescaler.

Figure 212. Control circuit in normal mode, internal clock divided by 1

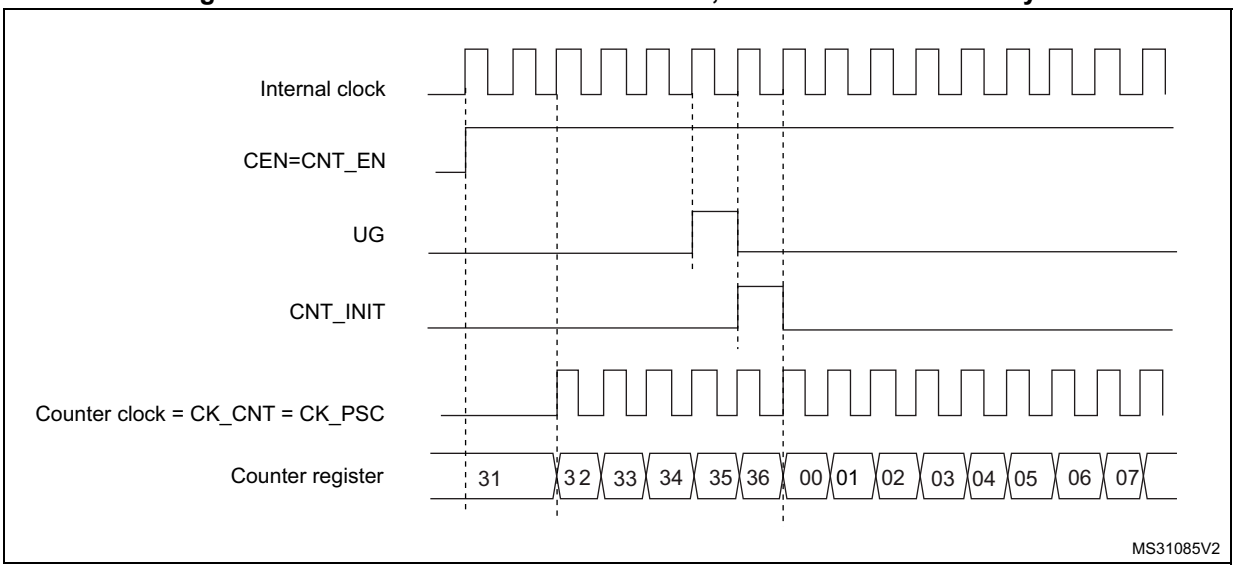

20.3.4 Debug mode

When the microcontroller enters the debug mode (Cortex®-M4 with FPU core - halted), the TIMx counter either continues to work normally or stops, depending on the DBG_TIMx_STOP configuration bit in the DBG module. For more details, refer to *Section 38.16.2: Debug support for timers, watchdog, bxCAN and I²C*.

20.4 TIM6 and TIM7 registers

Refer to *Section 1.1* for a list of abbreviations used in register descriptions.

The peripheral registers have to be written by half-words (16 bits) or words (32 bits). Read accesses can be done by bytes (8 bits), half-words (16 bits) or words (32 bits).

20.4.1 TIM6 and TIM7 control register 1 (TIMx_CR1)

Address offset: 0x00

Reset value: 0x0000

15	14	13	12	11	10	9	8	7	6	5	4	3	2	1	0
Reserved								ARPE	Reserved			OPM	URS	UDIS	CEN
								rw				rw	rw	rw	rw

Bits 15:8 Reserved, must be kept at reset value.

Bit 7 **ARPE**: Auto-reload preload enable
0: TIMx_ARR register is not buffered.
1: TIMx_ARR register is buffered.

Bits 6:4 Reserved, must be kept at reset value.

Bit 3 **OPM**: One-pulse mode
0: Counter is not stopped at update event
1: Counter stops counting at the next update event (clearing the CEN bit).

Bit 2 **URS**: Update request source

This bit is set and cleared by software to select the UEV event sources.

0: Any of the following events generates an update interrupt or DMA request if enabled. These events can be:

- Counter overflow/underflow
- Setting the UG bit
- Update generation through the slave mode controller

1: Only counter overflow/underflow generates an update interrupt or DMA request if enabled.

Bit 1 **UDIS**: Update disable

This bit is set and cleared by software to enable/disable UEV event generation.

0: UEV enabled. The Update (UEV) event is generated by one of the following events:

- Counter overflow/underflow
- Setting the UG bit
- Update generation through the slave mode controller

Buffered registers are then loaded with their preload values.

1: UEV disabled. The Update event is not generated, shadow registers keep their value (ARR, PSC). However the counter and the prescaler are reinitialized if the UG bit is set or if a hardware reset is received from the slave mode controller.

Bit 0 **CEN**: Counter enable

0: Counter disabled

1: Counter enabled

Note: Gated mode can work only if the CEN bit has been previously set by software. However trigger mode can set the CEN bit automatically by hardware.

CEN is cleared automatically in one-pulse mode, when an update event occurs.

20.4.2 TIM6 and TIM7 control register 2 (TIMx_CR2)

Address offset: 0x04

Reset value: 0x0000

15	14	13	12	11	10	9	8	7	6	5	4	3	2	1	0
Reserved									MMS[2:0]			Reserved			
									rw	rw	rw				

Bits 15:7 Reserved, must be kept at reset value.

Bits 6:4 **MMS[2:0]**: Master mode selection

These bits are used to select the information to be sent in master mode to slave timers for synchronization (TRGO). The combination is as follows:

000: **Reset** - the UG bit from the TIMx_EGR register is used as a trigger output (TRGO). If reset is generated by the trigger input (slave mode controller configured in reset mode) then the signal on TRGO is delayed compared to the actual reset.

001: **Enable** - the Counter enable signal, CNT_EN, is used as a trigger output (TRGO). It is useful to start several timers at the same time or to control a window in which a slave timer is enabled. The Counter Enable signal is generated by a logic OR between CEN control bit and the trigger input when configured in gated mode.

When the Counter Enable signal is controlled by the trigger input, there is a delay on TRGO, except if the master/slave mode is selected (see the MSM bit description in the TIMx_SMCR register).

010: **Update** - The update event is selected as a trigger output (TRGO). For instance a master timer can then be used as a prescaler for a slave timer.

Note: The clock of the slave timer and ADC must be enabled prior to receiving events from the master timer, and must not be changed on-the-fly while triggers are received from the master timer.

Bits 3:0 Reserved, must be kept at reset value.

20.4.3 TIM6 and TIM7 DMA/Interrupt enable register (TIMx_DIER)

Address offset: 0x0C

Reset value: 0x0000

15	14	13	12	11	10	9	8	7	6	5	4	3	2	1	0
Reserved							UDE	Reserved							UIE
							rw								rw

Bits 15:9 Reserved, must be kept at reset value.

Bit 8 **UDE**: Update DMA request enable

0: Update DMA request disabled.
1: Update DMA request enabled.

Bits 7:1 Reserved, must be kept at reset value.

Bit 0 **UIE**: Update interrupt enable

0: Update interrupt disabled.
1: Update interrupt enabled.

20.4.4 TIM6 and TIM7 status register (TIMx_SR)

Address offset: 0x10

Reset value: 0x0000

15	14	13	12	11	10	9	8	7	6	5	4	3	2	1	0
Reserved															UIF
															rc_w0

Bits 15:1 Reserved, must be kept at reset value.

Bit 0 **UIF**: Update interrupt flag

This bit is set by hardware on an update event. It is cleared by software.
0: No update occurred.
1: Update interrupt pending. This bit is set by hardware when the registers are updated:

– At overflow or underflow and if UDIS = 0 in the TIMx_CR1 register.
– When CNT is reinitialized by software using the UG bit in the TIMx_EGR register, if URS = 0 and UDIS = 0 in the TIMx_CR1 register.

20.4.5 TIM6 and TIM7 event generation register (TIMx_EGR)

Address offset: 0x14

Reset value: 0x0000

15	14	13	12	11	10	9	8	7	6	5	4	3	2	1	0
Reserved															UG
															w

Bits 15:1 Reserved, must be kept at reset value.

Bit 0 **UG**: Update generation

This bit can be set by software, it is automatically cleared by hardware.
0: No action.
1: Re-initializes the timer counter and generates an update of the registers. Note that the prescaler counter is cleared too (but the prescaler ratio is not affected).

20.4.6 TIM6 and TIM7 counter (TIMx_CNT)

Address offset: 0x24

Reset value: 0x0000

15	14	13	12	11	10	9	8	7	6	5	4	3	2	1	0
CNT[15:0]															
rw	rw	rw	rw	rw	rw	rw	rw	rw	rw	rw	rw	rw	rw	rw	rw

Bits 15:0 **CNT[15:0]**: Counter value

20.4.7 TIM6 and TIM7 prescaler (TIMx_PSC)

Address offset: 0x28

Reset value: 0x0000

15	14	13	12	11	10	9	8	7	6	5	4	3	2	1	0
PSC[15:0]															
rw	rw	rw	rw	rw	rw	rw	rw	rw	rw	rw	rw	rw	rw	rw	rw

Bits 15:0 **PSC[15:0]**: Prescaler value

The counter clock frequency CK_CNT is equal to f_{CK_PSC} / (PSC[15:0] + 1).
PSC contains the value to be loaded in the active prescaler register at each update event (including when the counter is cleared through UG bit of TIMx_EGR register or through trigger controller when configured in “reset mode”).

20.4.8 TIM6 and TIM7 auto-reload register (TIMx_ARR)

Address offset: 0x2C

Reset value: 0xFFFF

15	14	13	12	11	10	9	8	7	6	5	4	3	2	1	0
ARR[15:0]															
rw	rw	rw	rw	rw	rw	rw	rw	rw	rw	rw	rw	rw	rw	rw	rw

Bits 15:0 **ARR[15:0]**: Auto-reload value

ARR is the value to be loaded into the actual auto-reload register.
Refer to *Section 20.3.1: Time-base unit* for more details about ARR update and behavior.
The counter is blocked while the auto-reload value is null.

20.4.9 TIM6 and TIM7 register map

TIMx registers are mapped as 16-bit addressable registers as described in the table below.

Table 106. TIM6 and TIM7 register map and reset values

Offset	Register	31	30	29	28	27	26	25	24	23	22	21	20	19	18	17	16	15	14	13	12	11	10	9	8	7	6	5	4	3	2	1	0
0x00	TIMx_CR1	Reserved																								ARPE	Reserved			OPM	URS	UDIS	CEN
	Reset value																									0				0	0	0	0
0x04	TIMx_CR2	Reserved																									MMS[2:0]			Reserved			
	Reset value																										0	0	0				
0x08	Reserved																																
0x0C	TIMx_DIER	Reserved																							UDE	Reserved							UIE
	Reset value																								0								0
0x10	TIMx_SR	Reserved																															UIF
	Reset value																																0
0x14	TIMx_EGR	Reserved																															UG
	Reset value																																0
0x18	Reserved																																
0x1C	Reserved																																
0x20	Reserved																																
0x24	TIMx_CNT	Reserved																CNT[15:0]															
	Reset value																	0	0	0	0	0	0	0	0	0	0	0	0	0	0	0	0
0x28	TIMx_PSC	Reserved																PSC[15:0]															
	Reset value																	0	0	0	0	0	0	0	0	0	0	0	0	0	0	0	0
0x2C	TIMx_ARR	Reserved																ARR[15:0]															
	Reset value																	1	1	1	1	1	1	1	1	1	1	1	1	1	1	1	1

Refer to *Section 2.3: Memory map* for the register boundary addresses.

21 Independent watchdog (IWDG)

This section applies to the whole STM32F4xx family, unless otherwise specified.

21.1 IWDG introduction

The devices have two embedded watchdog peripherals which offer a combination of high safety level, timing accuracy and flexibility of use. Both watchdog peripherals (Independent and Window) serve to detect and resolve malfunctions due to software failure, and to trigger system reset or an interrupt (window watchdog only) when the counter reaches a given timeout value.

The independent watchdog (IWDG) is clocked by its own dedicated low-speed clock (LSI) and thus stays active even if the main clock fails. The window watchdog (WWDG) clock is prescaled from the APB1 clock and has a configurable time-window that can be programmed to detect abnormally late or early application behavior.

The IWDG is best suited to applications which require the watchdog to run as a totally independent process outside the main application, but have lower timing accuracy constraints. The WWDG is best suited to applications which require the watchdog to react within an accurate timing window. For further information on the window watchdog, refer to *Section 22 on page 713*.

21.2 IWDG main features

- Free-running downcounter
- clocked from an independent RC oscillator (can operate in Standby and Stop modes)
- Reset (if watchdog activated) when the downcounter value of 0x000 is reached

21.3 IWDG functional description

Figure 213 shows the functional blocks of the independent watchdog module.

When the independent watchdog is started by writing the value 0xCCCC in the Key register (IWDG_KR), the counter starts counting down from the reset value of 0xFFF. When it reaches the end of count value (0x000) a reset signal is generated (IWDG reset).

Whenever the key value 0xAAAA is written in the IWDG_KR register, the IWDG_RLR value is reloaded in the counter and the watchdog reset is prevented.

21.3.1 Hardware watchdog

If the “Hardware watchdog” feature is enabled through the device option bits, the watchdog is automatically enabled at power-on, and will generate a reset unless the Key register is written by the software before the counter reaches end of count.

21.3.2 Register access protection

Write access to the IWDG_PR and IWDG_RLR registers is protected. To modify them, first write the code 0x5555 in the IWDG_KR register. A write access to this register with a

different value will break the sequence and register access will be protected again. This implies that it is the case of the reload operation (writing 0xAAAA).

A status register is available to indicate that an update of the prescaler or the down-counter reload value is on going.

21.3.3 Debug mode

When the microcontroller enters debug mode (Cortex®-M4 with FPU core halted), the IWDG counter either continues to work normally or stops, depending on DBG_IWDG_STOP configuration bit in DBG module. For more details, refer to *Section 38.16.2: Debug support for timers, watchdog, bxCAN and I²C*.

Figure 213. Independent watchdog block diagram

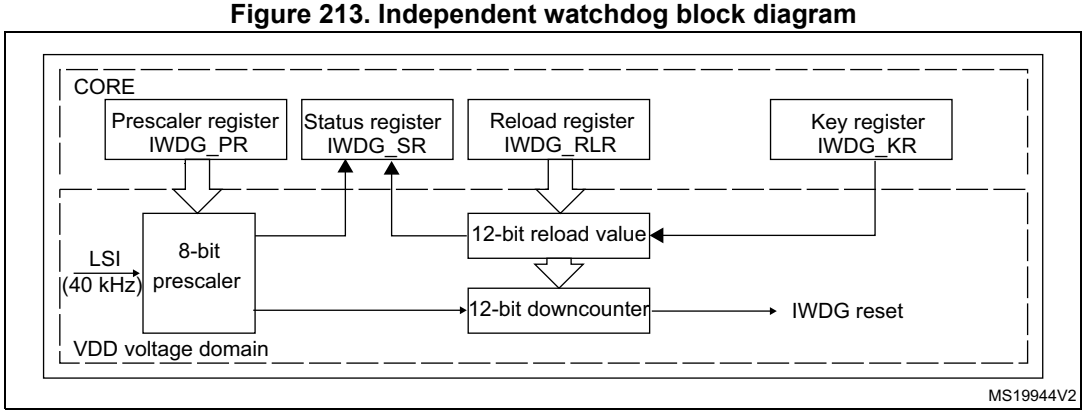

Note: The watchdog function is implemented in the V_{DD} voltage domain, still functional in Stop and Standby modes.

Table 107. Min/max IWDG timeout period (in ms) at 32 kHz (LSI)(1)

Prescaler divider	PR[2:0] bits	Min timeout RL[11:0]= 0x000	Max timeout RL[11:0]= 0xFFF
/4	0	0.125	512
/8	1	0.25	1024
/16	2	0.5	2048
/32	3	1	4096
/64	4	2	8192
/128	5	4	16384
/256	6	8	32768

1. These timings are given for a 32 kHz clock but the microcontroller internal RC frequency can vary. Refer to the LSI oscillator characteristics table in the device datasheet for maximum and minimum values.

21.4 IWDG registers

Refer to *Section 1.1* for a list of abbreviations used in register descriptions.

The peripheral registers have to be accessed by half-words (16 bits) or words (32 bits).

21.4.1 Key register (IWDG_KR)

Address offset: 0x00

Reset value: 0x0000 0000 (reset by Standby mode)

31	30	29	28	27	26	25	24	23	22	21	20	19	18	17	16	15	14	13	12	11	10	9	8	7	6	5	4	3	2	1	0
Reserved																KEY[15:0]															
																w	w	w	w	w	w	w	w	w	w	w	w	w	w	w	w

Bits 31:16 Reserved, must be kept at reset value.

Bits 15:0 **KEY[15:0]:** Key value (write only, read 0000h)

These bits must be written by software at regular intervals with the key value AAAAh, otherwise the watchdog generates a reset when the counter reaches 0.

Writing the key value 5555h to enable access to the IWDG_PR and IWDG_RLR registers (see *Section 21.3.2*)

Writing the key value CCCCh starts the watchdog (except if the hardware watchdog option is selected)

21.4.2 Prescaler register (IWDG_PR)

Address offset: 0x04

Reset value: 0x0000 0000

31	30	29	28	27	26	25	24	23	22	21	20	19	18	17	16	15	14	13	12	11	10	9	8	7	6	5	4	3	2	1	0
Reserved																													PR[2:0]		
																													rw	rw	rw

Bits 31:3 Reserved, must be kept at reset value.

Bits 2:0 **PR[2:0]:** Prescaler divider

These bits are write access protected see*Section 21.3.2*. They are written by software to select the prescaler divider feeding the counter clock. PVU bit of IWDG_SR must be reset in order to be able to change the prescaler divider.

000: divider /4
001: divider /8
010: divider /16
011: divider /32
100: divider /64
101: divider /128
110: divider /256
111: divider /256

Note: Reading this register returns the prescaler value from the VDD voltage domain. This value may not be up to date/valid if a write operation to this register is ongoing. For this reason the value read from this register is valid only when the PVU bit in the IWDG_SR register is reset.

21.4.3 Reload register (IWDG_RLR)

Address offset: 0x08

Reset value: 0x0000 0FFF (reset by Standby mode)

31	30	29	28	27	26	25	24	23	22	21	20	19	18	17	16	15	14	13	12	11	10	9	8	7	6	5	4	3	2	1	0
Reserved																				RL[11:0]											
																				rw	rw	rw	rw	rw	rw	rw	rw	rw	rw	rw	rw

Bits 31:12 Reserved, must be kept at reset value.

Bits11:0 **RL[11:0]:** Watchdog counter reload value

These bits are write access protected see *Section 21.3.2*. They are written by software to define the value to be loaded in the watchdog counter each time the value AAAAh is written in the IWDG_KR register. The watchdog counter counts down from this value. The timeout period is a function of this value and the clock prescaler. Refer to *Table 107.*

The RVU bit in the IWDG_SR register must be reset in order to be able to change the reload value.

Note: Reading this register returns the reload value from the VDD voltage domain. This value may not be up to date/valid if a write operation to this register is ongoing on this register. For this reason the value read from this register is valid only when the RVU bit in the IWDG_SR register is reset.

21.4.4 Status register (IWDG_SR)

Address offset: 0x0C

Reset value: 0x0000 0000 (not reset by Standby mode)

31	30	29	28	27	26	25	24	23	22	21	20	19	18	17	16	15	14	13	12	11	10	9	8	7	6	5	4	3	2	1	0
Reserved																														RVU	PVU
																														r	r

Bits 31:2 Reserved, must be kept at reset value.

Bit 1 **RVU:** Watchdog counter reload value update

This bit is set by hardware to indicate that an update of the reload value is ongoing. It is reset by hardware when the reload value update operation is completed in the V_{DD} voltage domain (takes up to 5 RC 40 kHz cycles).

Reload value can be updated only when RVU bit is reset.

Bit 0 **PVU:** Watchdog prescaler value update

This bit is set by hardware to indicate that an update of the prescaler value is ongoing. It is reset by hardware when the prescaler update operation is completed in the V_{DD} voltage domain (takes up to 5 RC 40 kHz cycles).

Prescaler value can be updated only when PVU bit is reset.

Note: If several reload values or prescaler values are used by application, it is mandatory to wait until RVU bit is reset before changing the reload value and to wait until PVU bit is reset before changing the prescaler value. However, after updating the prescaler and/or the reload value it is not necessary to wait until RVU or PVU is reset before continuing code execution (even in case of low-power mode entry, the write operation is taken into account and will complete)

21.4.5 IWDG register map

The following table gives the IWDG register map and reset values.

Table 108. IWDG register map and reset values

Offset	Register	31	30	29	28	27	26	25	24	23	22	21	20	19	18	17	16	15	14	13	12	11	10	9	8	7	6	5	4	3	2	1	0
0x00	**IWDG_KR**	Reserved																KEY[15:0]															
	Reset value																	0	0	0	0	0	0	0	0	0	0	0	0	0	0	0	0
0x04	**IWDG_PR**	Reserved																													PR[2:0]		
	Reset value																														0	0	0
0x08	**IWDG_RLR**	Reserved																				RL[11:0]											
	Reset value																					1	1	1	1	1	1	1	1	1	1	1	1
0x0C	**IWDG_SR**	Reserved																														RVU	PVU
	Reset value																															0	0

Refer to *Section 2.3: Memory map* for the register boundary addresses.

22 Window watchdog (WWDG)

This section applies to the whole STM32F4xx family, unless otherwise specified.

22.1 WWDG introduction

The window watchdog is used to detect the occurrence of a software fault, usually generated by external interference or by unforeseen logical conditions, which causes the application program to abandon its normal sequence. The watchdog circuit generates an MCU reset on expiry of a programmed time period, unless the program refreshes the contents of the downcounter before the T6 bit becomes cleared. An MCU reset is also generated if the 7-bit downcounter value (in the control register) is refreshed before the downcounter has reached the window register value. This implies that the counter must be refreshed in a limited window.

22.2 WWDG main features

- Programmable free-running downcounter
- Conditional reset
  - Reset (if watchdog activated) when the downcounter value becomes less than 0x40
  - Reset (if watchdog activated) if the downcounter is reloaded outside the window (see *Figure 215*)
- Early wakeup interrupt (EWI): triggered (if enabled and the watchdog activated) when the downcounter is equal to 0x40.

22.3 WWDG functional description

If the watchdog is activated (the WDGA bit is set in the WWDG_CR register) and when the 7-bit downcounter (T[6:0] bits) rolls over from 0x40 to 0x3F (T6 becomes cleared), it initiates a reset. If the software reloads the counter while the counter is greater than the value stored in the window register, then a reset is generated.

Figure 214. Watchdog block diagram

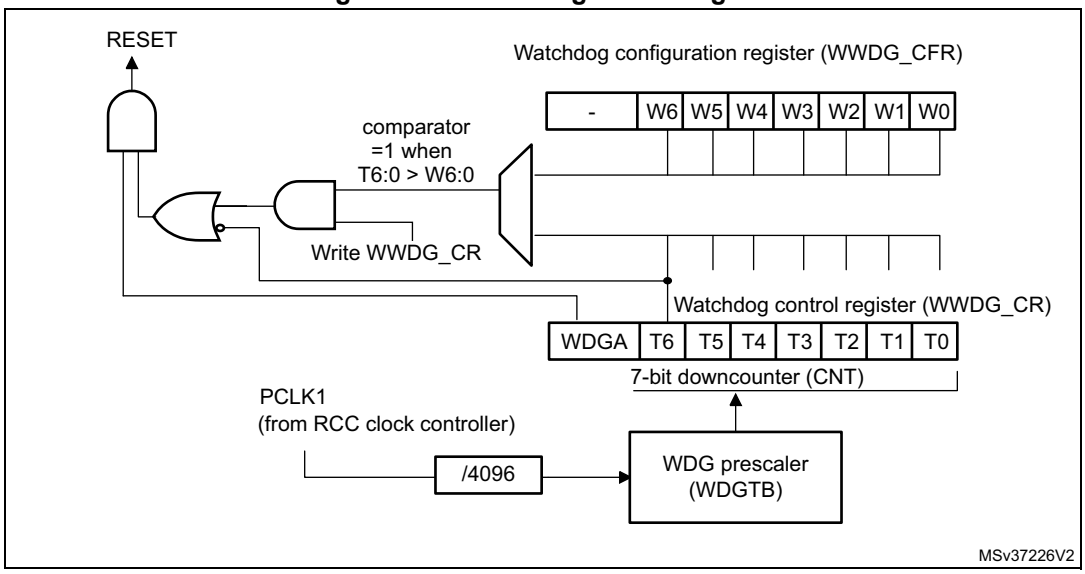

The application program must write in the WWDG_CR register at regular intervals during normal operation to prevent an MCU reset. This operation must occur only when the counter value is lower than the window register value. The value to be stored in the WWDG_CR register must be between 0xFF and 0xC0.

Enabling the watchdog

The watchdog is always disabled after a reset. It is enabled by setting the WDGA bit in the WWDG_CR register, then it cannot be disabled again except by a reset.

Controlling the downcounter

This downcounter is free-running, counting down even if the watchdog is disabled. When the watchdog is enabled, the T6 bit must be set to prevent generating an immediate reset.

The T[5:0] bits contain the number of increments which represents the time delay before the watchdog produces a reset. The timing varies between a minimum and a maximum value due to the unknown status of the prescaler when writing to the WWDG_CR register (see *Figure 215*). The Configuration register (WWDG_CFR) contains the high limit of the window: To prevent a reset, the downcounter must be reloaded when its value is lower than the window register value and greater than 0x3F. *Figure 215* describes the window watchdog process.

Note: The T6 bit can be used to generate a software reset (the WDGA bit is set and the T6 bit is cleared).

Advanced watchdog interrupt feature

The Early Wakeup Interrupt (EWI) can be used if specific safety operations or data logging must be performed before the actual reset is generated. The EWI interrupt is enabled by setting the EWI bit in the WWDG_CFR register. When the downcounter reaches the value 0x40, an EWI interrupt is generated and the corresponding interrupt service routine (ISR) can be used to trigger specific actions (such as communications or data logging), before resetting the device.

In some applications, the EWI interrupt can be used to manage a software system check and/or system recovery/graceful degradation, without generating a WWDG reset. In this case, the corresponding interrupt service routine (ISR) should reload the WWDG counter to avoid the WWDG reset, then trigger the required actions.

The EWI interrupt is cleared by writing '0' to the EWIF bit in the WWDG_SR register.

Note: When the EWI interrupt cannot be served, e.g. due to a system lock in a higher priority task, the WWDG reset will eventually be generated.

22.4 How to program the watchdog timeout

Warning: When writing to the WWDG_CR register, always write 1 in the T6 bit to avoid generating an immediate reset.

Figure 215. Window watchdog timing diagram

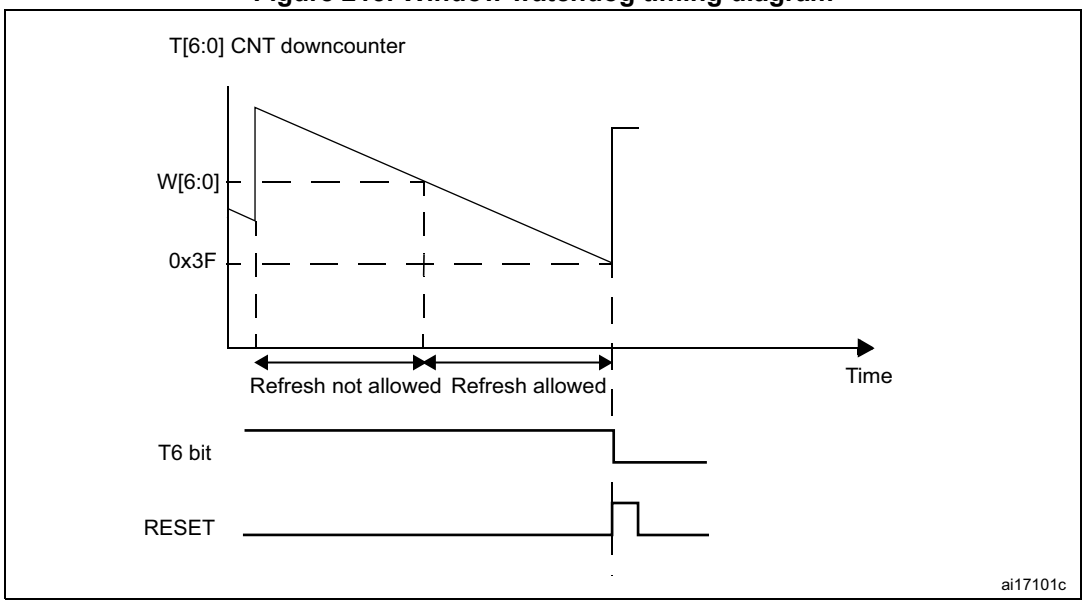

The formula to calculate the WWDG timeout value is given by:

$$t_{WWDG} = t_{PCLK1} \times 4096 \times 2^{WDGTB[1:0]} \times (T[5:0] + 1) \qquad (ms)$$

where:

t_{WWDG}: WWDG timeout

t_{PCLK1}: APB1 clock period measured in ms

4096: value corresponding to internal divider

As an example, let us assume APB1 frequency is equal to 24 MHz, WDGTB[1:0] is set to 3 and T[5:0] is set to 63:

$$t_{WWDG} = 1/24000 \times 4096 \times 2^3 \times (63+1) = 21.85ms$$

Refer to *Table 109* for the minimum and maximum values of the t_{WWDG}.

Table 109. Minimum and maximum timeout values at 30 MHz (f_{PCLK1})

Prescaler	WDGTB	Min timeout (µs) T[5:0] = 0x00	Max timeout (ms) T[5:0] = 0x3F
1	0	136.53	8.74
2	1	273.07	17.48
4	2	546.13	34.95
8	3	1092.27	69.91

22.5 Debug mode

When the microcontroller enters debug mode (Cortex®-M4 with FPU core halted), the WWDG counter either continues to work normally or stops, depending on DBG_WWDG_STOP configuration bit in DBG module. For more details, refer to *Section 38.16.2: Debug support for timers, watchdog, bxCAN and I²C*.

22.6 WWDG registers

Refer to *Section 1.1* for a list of abbreviations used in register descriptions.

The peripheral registers have to be accessed by half-words (16 bits) or words (32 bits).

22.6.1 Control register (WWDG_CR)

Address offset: 0x00

Reset value: 0x0000 007F

31	30	29	28	27	26	25	24	23	22	21	20	19	18	17	16
Reserved															
15	14	13	12	11	10	9	8	7	6	5	4	3	2	1	0
Reserved								WDGA	T[6:0]						
								rs	rw						

Bits 31:8 Reserved, must be kept at reset value.

Bit 7 **WDGA:** Activation bit

This bit is set by software and only cleared by hardware after a reset. When WDGA = 1, the watchdog can generate a reset.

0: Watchdog disabled

1: Watchdog enabled

Bits 6:0 **T[6:0]:** 7-bit counter (MSB to LSB)

These bits contain the value of the watchdog counter. It is decremented every (4096 x $2^{WDGTB[1:0]}$) PCLK1 cycles. A reset is produced when it rolls over from 0x40 to 0x3F (T6 becomes cleared).

22.6.2 Configuration register (WWDG_CFR)

Address offset: 0x04

Reset value: 0x0000 007F

31	30	29	28	27	26	25	24	23	22	21	20	19	18	17	16
Reserved															
15	14	13	12	11	10	9	8	7	6	5	4	3	2	1	0
Reserved						EWI	WDGTB[1:0]		W[6:0]						
						rs	rw		rw						

Bit 31:10 Reserved, must be kept at reset value.

Bit 9 **EWI:** Early wakeup interrupt

When set, an interrupt occurs whenever the counter reaches the value 0x40. This interrupt is only cleared by hardware after a reset.

Bits 8:7 **WDGTB[1:0]:** Timer base

The time base of the prescaler can be modified as follows:
00: CK Counter Clock (PCLK1 div 4096) div 1
01: CK Counter Clock (PCLK1 div 4096) div 2
10: CK Counter Clock (PCLK1 div 4096) div 4
11: CK Counter Clock (PCLK1 div 4096) div 8

Bits 6:0 **W[6:0]:** 7-bit window value

These bits contain the window value to be compared to the downcounter.

22.6.3 Status register (WWDG_SR)

Address offset: 0x08
Reset value: 0x0000 0000

31	30	29	28	27	26	25	24	23	22	21	20	19	18	17	16
Reserved															
15	14	13	12	11	10	9	8	7	6	5	4	3	2	1	0
Reserved															EWIF
															rc_w0

Bits 31:1 Reserved, must be kept at reset value.

Bit 0 **EWIF:** Early wakeup interrupt flag

This bit is set by hardware when the counter has reached the value 0x40. It must be cleared by software by writing ‘0’. A write of ‘1’ has no effect. This bit is also set if the interrupt is not enabled.

22.6.4 WWDG register map

The following table gives the WWDG register map and reset values.

Table 110. WWDG register map and reset values

Offset	Register	31	30	29	28	27	26	25	24	23	22	21	20	19	18	17	16	15	14	13	12	11	10	9	8	7	6	5	4	3	2	1	0
0x00	**WWDG_CR**	Reserved																								WDGA	T[6:0]						
	Reset value																									0	1	1	1	1	1	1	1
0x04	**WWDG_CFR**	Reserved																						EWI	WDGTB1	WDGTB0	W[6:0]						
	Reset value																							0	0	0	1	1	1	1	1	1	1
0x08	**WWDG_SR**	Reserved																															EWIF
	Reset value																																0

Refer to *Section 2.3: Memory map* for the register boundary addresses.

23 Cryptographic processor (CRYP)

This section applies to STM32F415/417xx and STM32F43xxx devices.

23.1 CRYP introduction

The cryptographic processor can be used to both encipher and decipher data using the DES, Triple-DES or AES (128, 192, or 256) algorithms. It is a fully compliant implementation of the following standards:

- The data encryption standard (DES) and Triple-DES (TDES) as defined by Federal Information Processing Standards Publication (FIPS PUB 46-3, 1999 October 25). It follows the American National Standards Institute (ANSI) X9.52 standard.
- The advanced encryption standard (AES) as defined by Federal Information Processing Standards Publication (FIPS PUB 197, 2001 November 26)

The CRYP processor performs data encryption and decryption using DES and TDES algorithms in Electronic codebook (ECB) or Cipher block chaining (CBC) mode.

The CRYP peripheral is a 32-bit AHB2 peripheral. It supports DMA transfer for incoming and processed data, and has input and output FIFOs (each 8 words deep).

23.2 CRYP main features

- Suitable for AES, DES and TDES enciphering and deciphering operations
- AES
  - Supports the ECB, CBC, CTR, CCM and GCM chaining algorithms (CCM and GCM are available on STM32F42xxx and STM32F43xxx only)
  - Supports 128-, 192- and 256-bit keys
  - 4 × 32-bit initialization vectors (IV) used in the CBC, CTR, CCM and GCM modes

Table 111. Number of cycles required to process each 128-bit block (STM32F415/417xx)

Algorithm / Key size	ECB	CBC	CTR
128b	14	14	14
192b	16	16	16
256b	18	18	18

Table 112. Number of cycles required to process each 128-bit block (STM32F43xxx)

Algorithm / Key size	ECB	CBC	CTR	GCM				CCM			
				Init	Header	Payload	Tag	Init	Header	Payload	Tag
128b	14	14	14	24	10	14	14	12	14	25	14

Table 112. Number of cycles required to process each 128-bit block (STM32F43xxx)

192b	16	16	16	28	10	16	16	14	16	29	16
256b	18	18	18	32	10	18	18	16	18	33	18

- DES/TDES
  - Direct implementation of simple DES algorithms (a single key, K1, is used)
  - Supports the ECB and CBC chaining algorithms
  - Supports 64-, 128- and 192-bit keys (including parity)
  - 2 × 32-bit initialization vectors (IV) used in the CBC mode
  - 16 HCLK cycles to process one 64-bit block in DES
  - 48 HCLK cycles to process one 64-bit block in TDES
- Common to DES/TDES and AES
  - IN and OUT FIFO (each with an 8-word depth, a 32-bit width, corresponding to 4 DES blocks or 2 AES blocks)
  - Automatic data flow control with support of direct memory access (DMA) (using 2 channels, one for incoming data the other for processed data)
  - Data swapping logic to support 1-, 8-, 16- or 32-bit data

23.3 CRYP functional description

The cryptographic processor implements a Triple-DES (TDES, that also supports DES) core and an AES cryptographic core. *Section 23.3.1* and *Section 23.3.2* provide details on these cores.

Since the TDES and the AES algorithms use block ciphers, incomplete input data blocks have to be padded prior to encryption (extra bits should be appended to the trailing end of the data string). After decryption, the padding has to be discarded. The hardware does not manage the padding operation, the software has to handle it.

Figure 216 shows the block diagram of the cryptographic processor.

Figure 216. Block diagram (STM32F415/417xx)

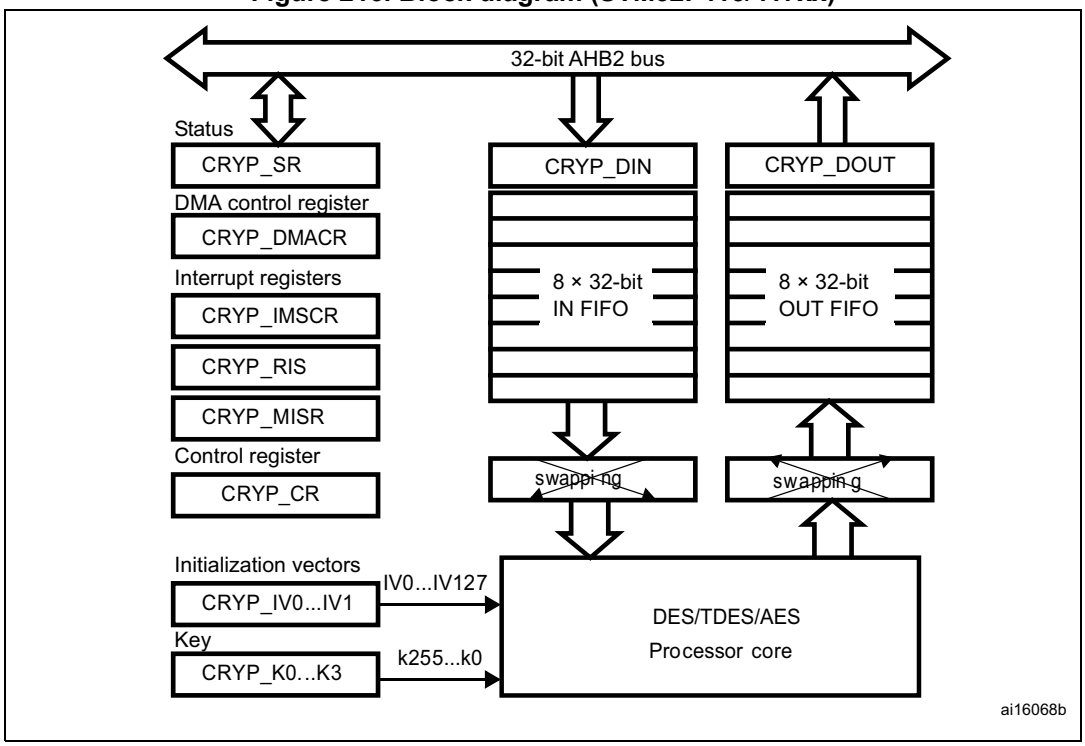

Figure 217. Block diagram (STM32F43xxx)

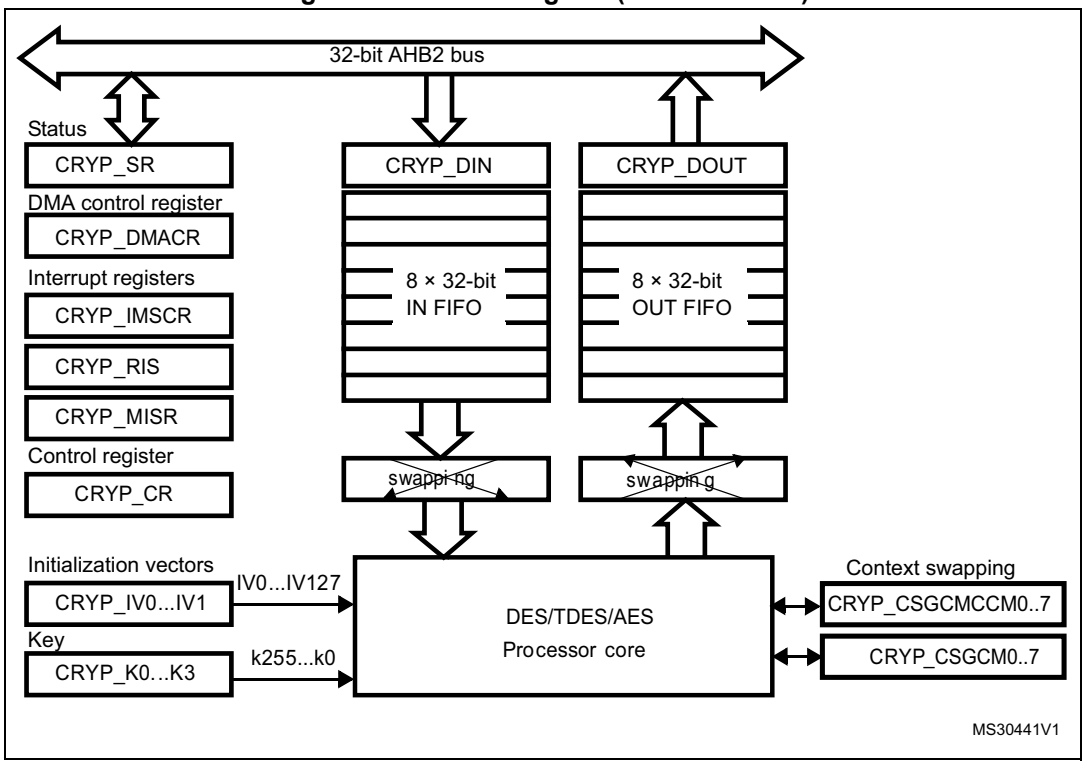

23.3.1 DES/TDES cryptographic core

The DES/Triple-DES cryptographic core consists of three components:

- The DES algorithm (DEA)
- Multiple keys (1 for the DES algorithm, 1 to 3 for the TDES algorithm)
- The initialization vector (used in the CBC mode)

The basic processing involved in the TDES is as follows: an input block is read in the DEA and encrypted using the first key, K1 (K0 is not used in TDES mode). The output is then decrypted using the second key, K2, and encrypted using the third key, K3. The key depends on the algorithm which is used:

- DES mode: Key = [K1]
- TDES mode: Key = [K3 K2 K1]

where Kx=[KxR KxL], R = right, L = left

According to the mode implemented, the resultant output block is used to calculate the ciphertext.

Note that the outputs of the intermediate DEA stages is never revealed outside the cryptographic boundary.

The TDES allows three different keying options:

- Three independent keys

  The first option specifies that all the keys are independent, that is, K1, K2 and K3 are independent. FIPS PUB 46-3 – 1999 (and ANSI X9.52 – 1998) refers to this option as the Keying Option 1 and, to the TDES as 3-key TDES.

- Two independent keys

  The second option specifies that K1 and K2 are independent and K3 is equal to K1, that is, K1 and K2 are independent, K3 = K1. FIPS PUB 46-3 – 1999 (and ANSI X9.52 – 1998) refers to this second option as the Keying Option 2 and, to the TDES as 2-key TDES.

- Three equal keys

  The third option specifies that K1, K2 and K3 are equal, that is, K1 = K2 = K3. FIPS PUB 46-3 – 1999 (and ANSI X9.52 – 1998) refers to the third option as the Keying Option 3. This “1-key” TDES is equivalent to single DES.

FIPS PUB 46-3 – 1999 (and ANSI X9.52-1998) provides a thorough explanation of the processing involved in the four operation modes supplied by the TDEA (TDES algorithm): TDES-ECB encryption, TDES-ECB decryption, TDES-CBC encryption and TDES-CBC decryption.
This reference manual only gives a brief explanation of each mode.

DES and TDES Electronic codebook (DES/TDES-ECB) mode

- DES/TDES-ECB mode encryption

  Figure 218 illustrates the encryption in DES and TDES Electronic codebook (DES/TDES-ECB) mode. A 64-bit plaintext data block (P) is used after bit/byte/half-word swapping (refer to *Section 23.3.3: Data type on page 739*) as the input block (I). The input block is processed through the DEA in the encrypt state using K1. The output of this process is fed back directly to the input of the DEA where the DES is performed in the decrypt state using K2. The output of this process is fed back directly to the input of the DEA where the DES is performed in the encrypt state using K3. The resultant 64-bit output block (O) is used, after bit/byte/half-word swapping, as ciphertext (C) and it is pushed into the OUT FIFO.

- DES/TDES-ECB mode decryption

  Figure 219 illustrates the DES/TDES-ECB decryption. A 64-bit ciphertext block (C) is used, after bit/byte/half-word swapping, as the input block (I). The keying sequence is reversed compared to that used in the encryption process. The input block is processed through the DEA in the decrypt state using K3. The output of this process is fed back directly to the input of the DEA where the DES is performed in the encrypt state using K2. The new result is directly fed to the input of the DEA where the DES is performed in the decrypt state using K1. The resultant 64-bit output block (O), after bit/byte/half-word swapping, produces the plaintext (P).

Figure 218. DES/TDES-ECB mode encryption

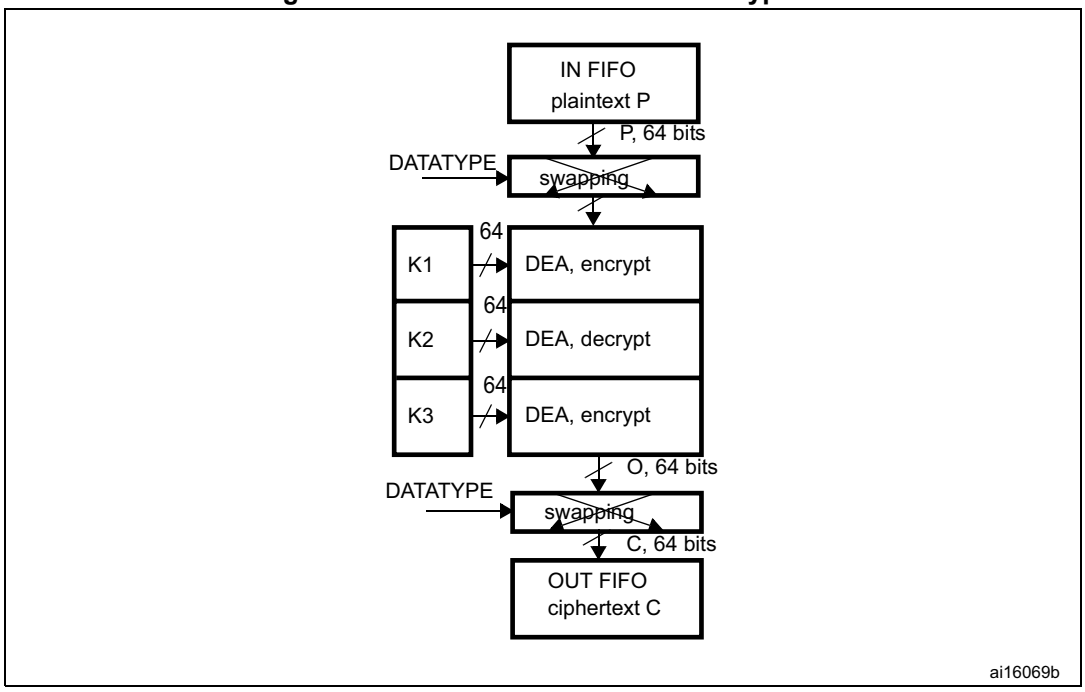

1. K: key; C: cipher text; I: input block; O: output block; P: plain text.

Figure 219. DES/TDES-ECB mode decryption

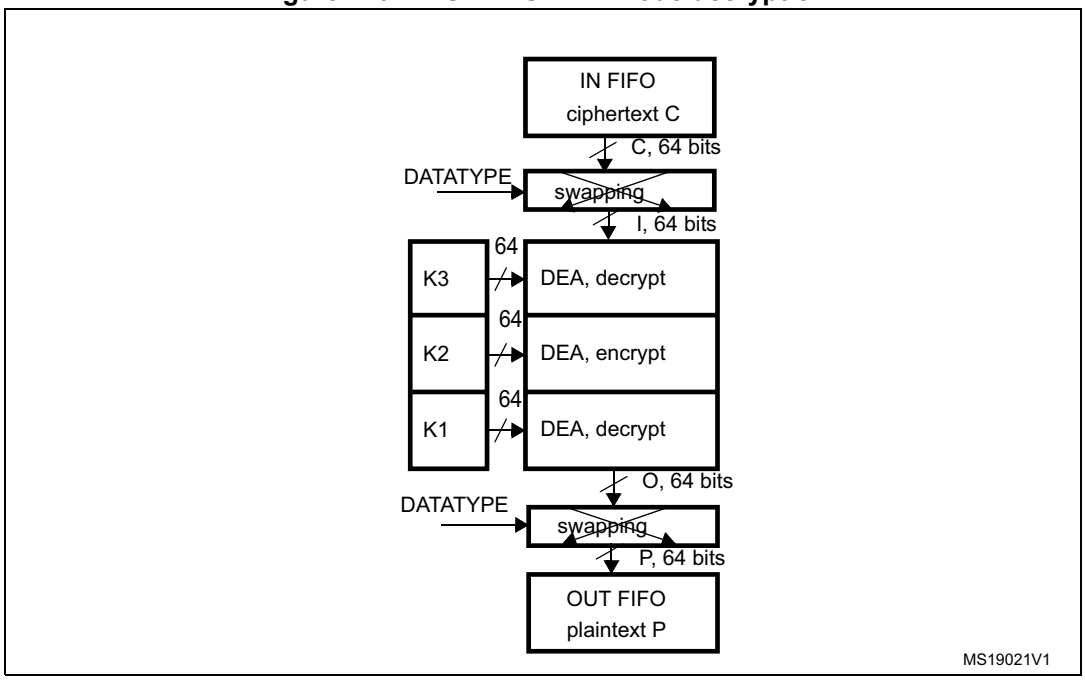

1. K: key; C: cipher text; I: input block; O: output block; P: plain text.

DES and TDES Cipher block chaining (DES/TDES-CBC) mode

- DES/TDES-CBC mode encryption

  Figure 220 illustrates the DES and Triple-DES Cipher block chaining (DES/TDES-CBC) mode encryption. This mode begins by dividing a plaintext message into 64-bit data blocks. In TCBC encryption, the first input block (I_1), obtained after bit/byte/half-word swapping (refer to *Section 23.3.3: Data type on page 739*), is formed by exclusive-ORing the first plaintext data block (P_1) with a 64-bit initialization vector IV ($I_1 = IV \oplus P_1$). The input block is processed through the DEA in the encrypt state using K1. The output of this process is fed back directly to the input of the DEA, which performs the DES in the decrypt state using K2. The output of this process is fed directly to the input of the DEA, which performs the DES in the encrypt state using K3. The resultant 64-bit output block (O_1) is used directly as the ciphertext (C_1), that is, $C_1 = O_1$. This first ciphertext block is then exclusive-ORed with the second plaintext data block to produce the second input block, (I_2) = ($C_1 \oplus P_2$). Note that I_2 and P_2 now refer to the second block. The second input block is processed through the TDEA to produce the second ciphertext block. This encryption process continues to “chain” successive cipher and plaintext blocks together until the last plaintext block in the message is encrypted. If the message does not consist of an integral number of data blocks, then the final partial data block should be encrypted in a manner specified for the application.

- DES/TDES-CBC mode decryption

  In DES/TDES-CBC decryption (see *Figure 221*), the first ciphertext block (C_1) is used directly as the input block (I_1). The keying sequence is reversed compared to that used for the encrypt process. The input block is processed through the DEA in the decrypt state using K3. The output of this process is fed directly to the input of the DEA where the DES is processed in the encrypt state using K2. This resulting value is directly fed to the input of the DEA where the DES is processed in the decrypt state using K1. The resulting output block is exclusive-ORed with the IV (which must be the same as that used during encryption) to produce the first plaintext block ($P_1 = O_1 \oplus IV$). The second ciphertext block is then used as the next input block and is processed through the TDEA. The resulting output block is exclusive-ORed with the first ciphertext block to produce the second plaintext data block ($P_2 = O_2 \oplus C_1$). (Note that P_2 and O_2 refer to the second block of data.) The TCBC decryption process continues in this manner until the last complete ciphertext block has been decrypted. Ciphertext representing a partial data block must be decrypted in a manner specified for the application.

Figure 220. DES/TDES-CBC mode encryption

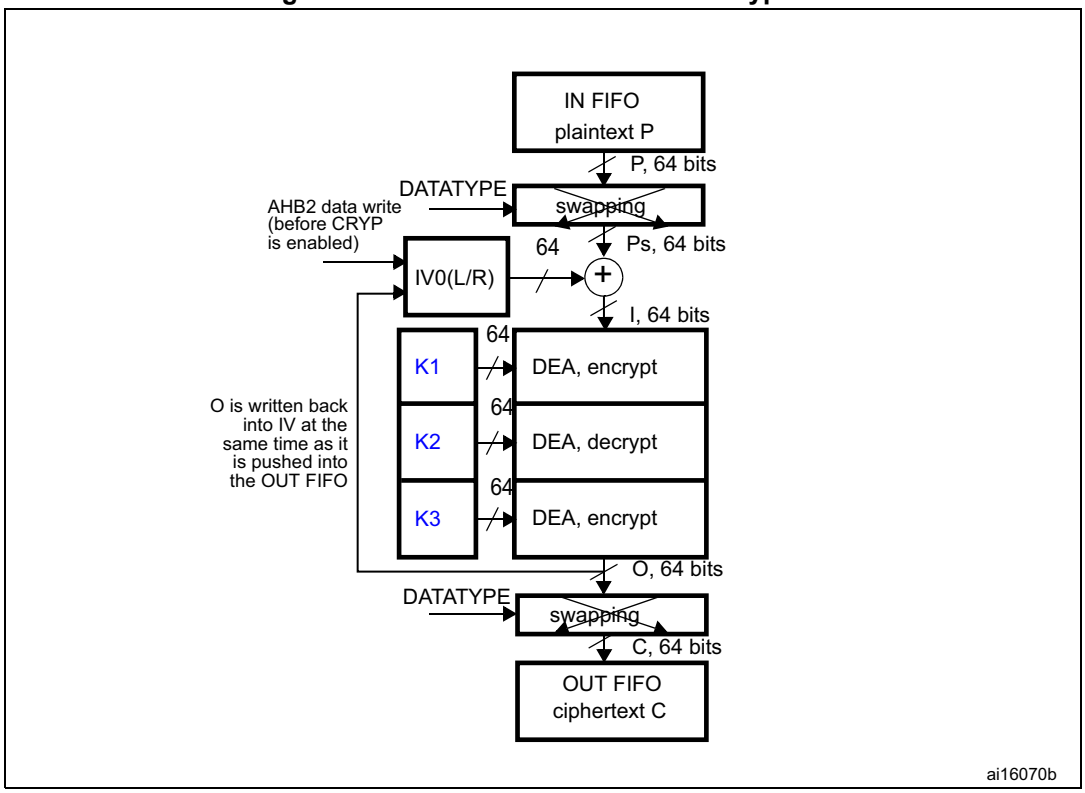

1. K: key; C: cipher text; I: input block; O: output block; Ps: plain text before swapping (when decoding) or after swapping (when encoding); P: plain text; IV: initialization vectors.

Figure 221. DES/TDES-CBC mode decryption

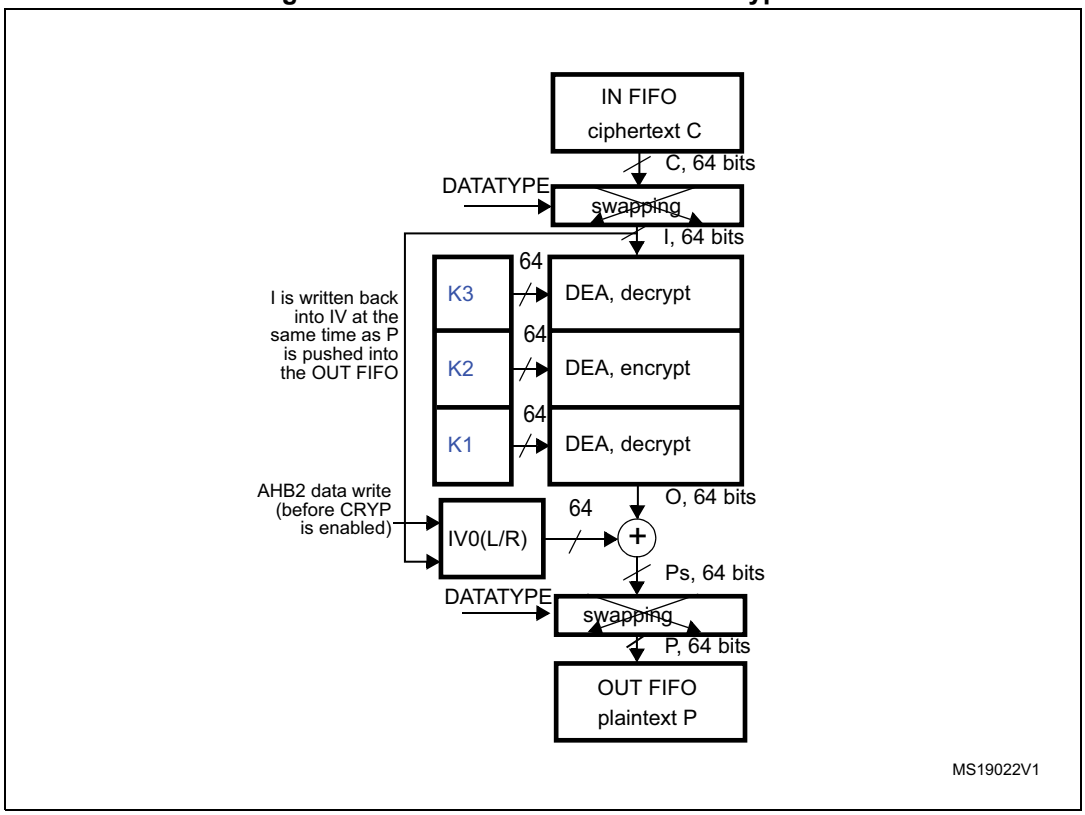

1. K: key; C: cipher text; I: input block; O: output block; Ps: plain text before swapping (when decoding) or after swapping (when encoding); P: plain text; IV: initialization vectors.

23.3.2 AES cryptographic core

The AES cryptographic core consists of three components:

- The AES algorithm (AEA: advanced encryption algorithm)
- Multiple keys
- Initialization vector(s) or Nonce

The AES utilizes keys of 3 possible lengths: 128, 192 or 256 bits and, depending on the operation mode used, zero or one 128-bit initialization vector (IV).

The basic processing involved in the AES is as follows: an input block of 128 bits is read from the input FIFO and sent to the AEA to be encrypted using the key (K0...3). The key format depends on the key size:

- If Key size = 128: Key = [K3 K2]
- If Key size = 192: Key = [K3 K2 K1]
- If Key size = 256: Key = [K3 K2 K1 K0]

where Kx=[KxR KxL],R=right, L=left

According to the mode implemented, the resultant output block is used to calculate the ciphertext.

FIPS PUB 197 (November 26, 2001) provides a thorough explanation of the processing involved in the four operation modes supplied by the AES core: AES-ECB encryption, AES-

ECB decryption, AES-CBC encryption and AES-CBC decryption.This reference manual only gives a brief explanation of each mode.

AES Electronic codebook (AES-ECB) mode

- AES-ECB mode encryption

  Figure 222 illustrates the AES Electronic codebook (AES-ECB) mode encryption.

  In AES-ECB encryption, a 128- bit plaintext data block (P) is used after bit/byte/half-word swapping (refer to *Section 23.3.3: Data type on page 739*) as the input block (I). The input block is processed through the AEA in the encrypt state using the 128, 192 or 256-bit key. The resultant 128-bit output block (O) is used after bit/byte/half-word swapping as ciphertext (C). It is then pushed into the OUT FIFO.

- AES-ECB mode decryption

  Figure 223 illustrates the AES Electronic codebook (AES-ECB) mode encryption.

  To perform an AES decryption in the ECB mode, the secret key has to be prepared (it is necessary to execute the complete key schedule for encryption) by collecting the last round key, and using it as the first round key for the decryption of the ciphertext. This preparation function is computed by the AES core. Refer to *Section 23.3.6: Procedure to perform an encryption or a decryption* for more details on how to prepare the key.

  In AES-ECB decryption, a 128-bit ciphertext block (C) is used after bit/byte/half-word swapping as the input block (I). The keying sequence is reversed compared to that of the encryption process. The resultant 128-bit output block (O), after bit/byte or half-word swapping, produces the plaintext (P).

Figure 222. AES-ECB mode encryption

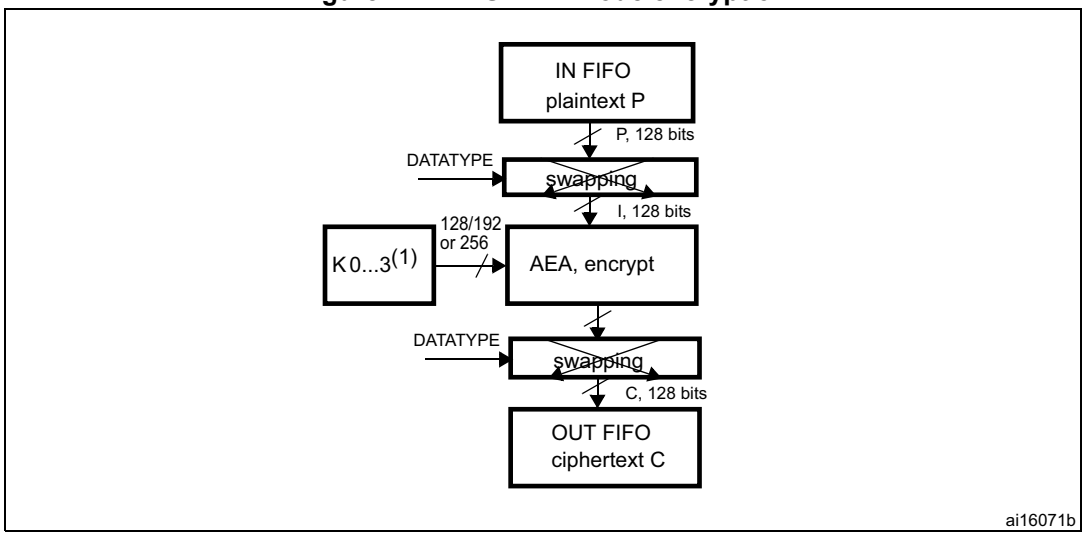

1. K: key; C: cipher text; I: input block; O: output block; P: plain text.
2. If Key size = 128: Key = [K3 K2].
   If Key size = 192: Key = [K3 K2 K1]
   If Key size = 256: Key = [K3 K2 K1 K0].

Figure 223. AES-ECB mode decryption

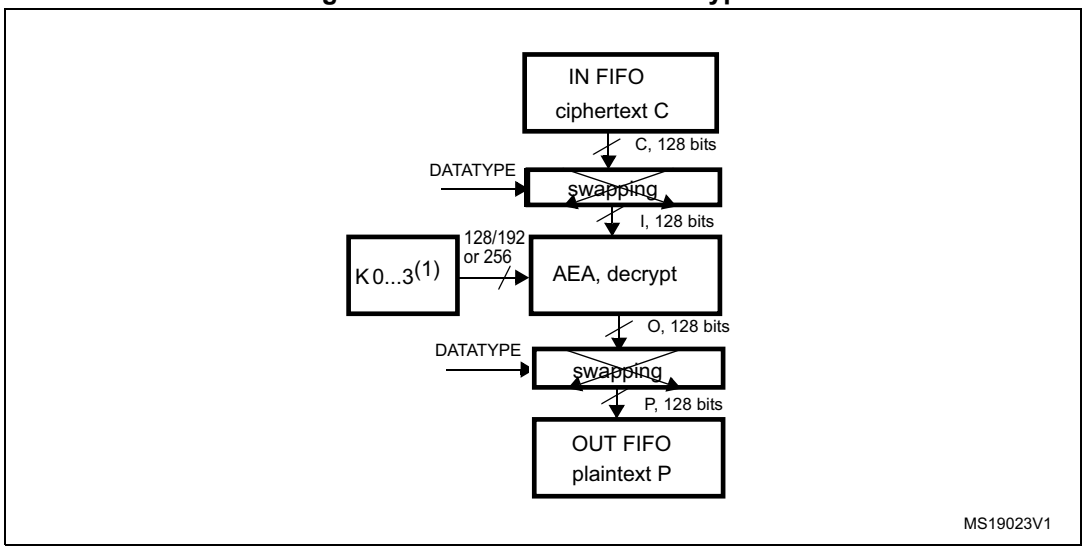

1. K: key; C: cipher text; I: input block; O: output block; P: plain text.
2. If Key size = 128 => Key = [K3 K2].
   If Key size = 192 => Key = [K3 K2 K1]
   If Key size = 256 => Key = [K3 K2 K1 K0].

AES Cipher block chaining (AES-CBC) mode

- AES-CBC mode encryption

  The AES Cipher block chaining (AES-CBC) mode decryption is shown on *Figure 224*.

  In AES-CBC encryption, the first input block (I_1) obtained after bit/byte/half-word swapping (refer to *Section 23.3.3: Data type on page 739*) is formed by exclusive-ORing the first plaintext data block (P_1) with a 128-bit initialization vector IV ($I_1 = IV \oplus P_1$). The input block is processed through the AEA in the encrypt state using the 128-, 192- or 256-bit key (K0...K3). The resultant 128-bit output block (O_1) is used directly as ciphertext (C_1), that is, $C_1 = O_1$. This first ciphertext block is then exclusive-ORed with the second plaintext data block to produce the second input block, (I_2) = ($C_1 \oplus P_2$). Note that I_2 and P_2 now refer to the second block. The second input block is processed through the AEA to produce the second ciphertext block. This encryption process continues to “chain” successive cipher and plaintext blocks together until the last plaintext block in the message is encrypted. If the message does not consist of an integral number of data blocks, then the final partial data block should be encrypted in a manner specified for the application.

  In the CBC mode, like in the ECB mode, the secret key must be prepared to perform an AES decryption. Refer to *Section 23.3.6: Procedure to perform an encryption or a decryption on page 744* for more details on how to prepare the key.

- AES-CBC mode decryption

  In AES-CBC decryption (see *Figure 225*), the first 128-bit ciphertext block (C_1) is used directly as the input block (I_1). The input block is processed through the AEA in the decrypt state using the 128-, 192- or 256-bit key. The resulting output block is exclusive-ORed with the 128-bit initialization vector IV (which must be the same as that used during encryption) to produce the first plaintext block ($P_1 = O_1 \oplus IV$). The second ciphertext block is then used as the next input block and is processed through the AEA. The resulting output block is exclusive-ORed with the first ciphertext block to produce the second plaintext data block ($P_2 = O_2 \oplus C_1$). (Note that P_2 and O_2 refer to the second

block of data.) The AES-CBC decryption process continues in this manner until the last complete ciphertext block has been decrypted. Ciphertext representing a partial data block must be decrypted in a manner specified for the application.

Figure 224. AES-CBC mode encryption

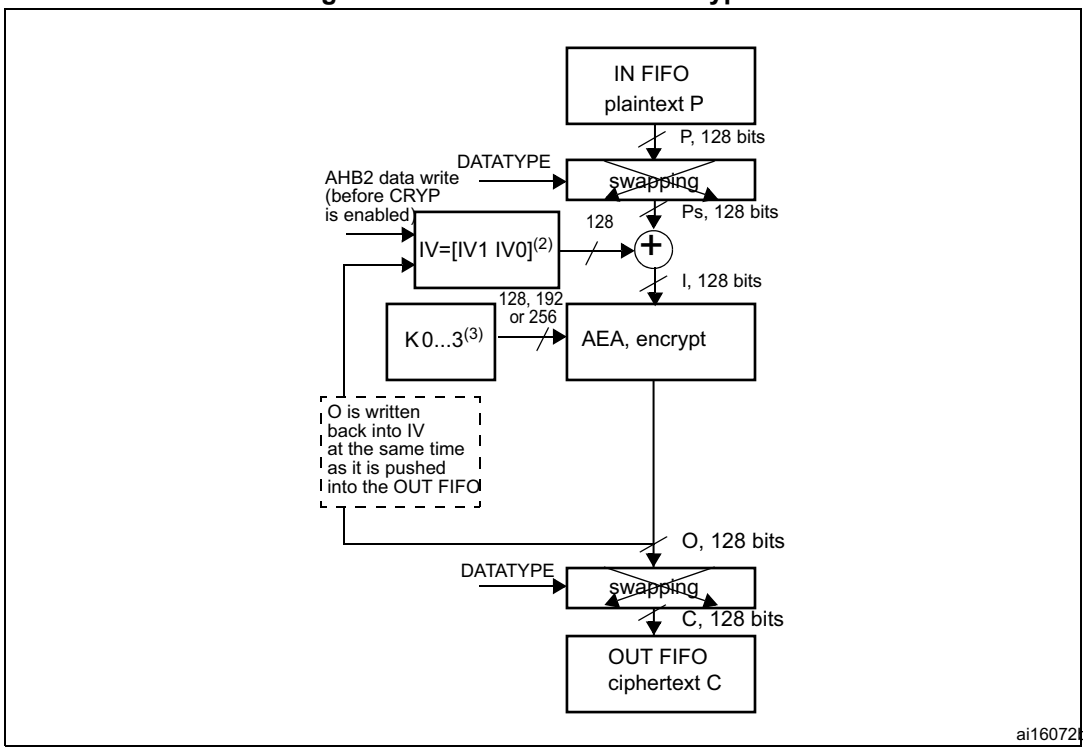

1. K: key; C: cipher text; I: input block; O: output block; Ps: plain text before swapping (when decoding) or after swapping (when encoding); P: plain text; IV: Initialization vectors.
2. IVx=[IVxR IVxL], R=right, L=left.
3. If Key size = 128 => Key = [K3 K2].
   If Key size = 192 => Key = [K3 K2 K1]
   If Key size = 256 => Key = [K3 K2 K1 K0].

Figure 225. AES-CBC mode decryption

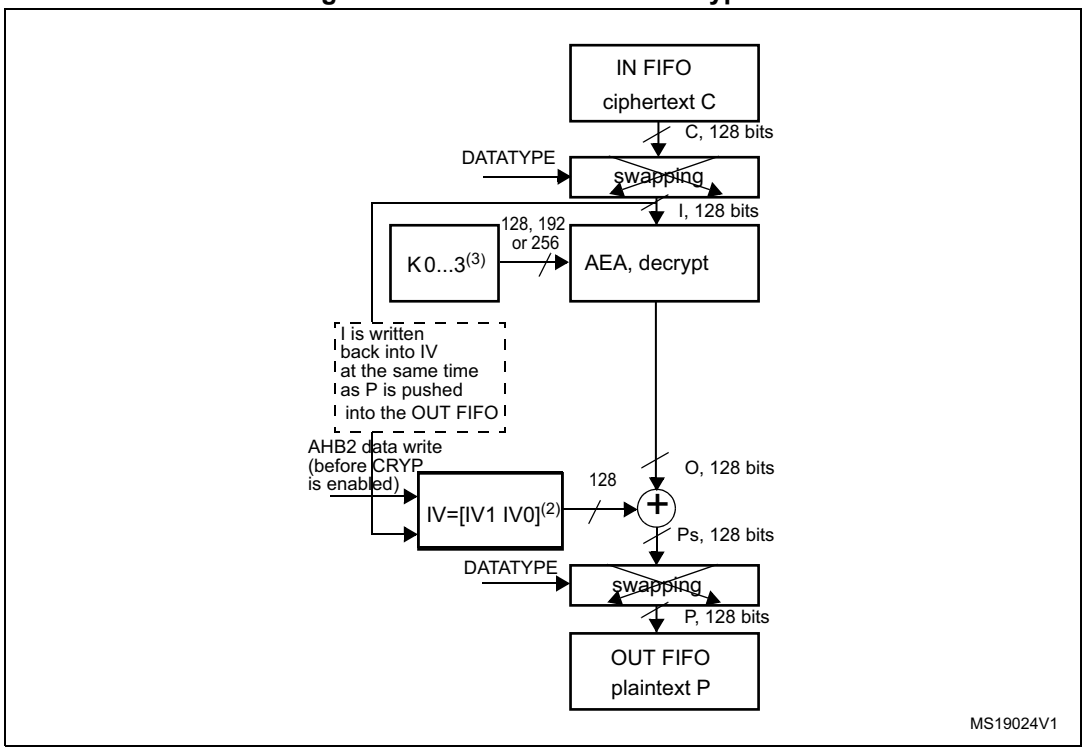

1. K: key; C: cipher text; I: input block; O: output block; Ps: plain text before swapping (when decoding) or after swapping (when encoding); P: plain text; IV: Initialization vectors.
2. IVx=[IVxR IVxL], R=right, L=left.
3. If Key size = 128 => Key = [K3 K2].
   If Key size = 192 => Key = [K3 K2 K1]
   If Key size = 256 => Key = [K3 K2 K1 K0].

AES counter mode (AES-CTR) mode

The AES counter mode uses the AES block as a key stream generator. The generated keys are then XORed with the plaintext to obtain the cipher. For this reason, it makes no sense to speak of different CTR encryption/decryption, since the two operations are exactly the same.

In fact, given:

- Plaintext: P[0], P[1], ..., P[n] (128 bits each)
- A key K to be used (the size does not matter)
- An initial counter block (call it ICB but it has the same functionality as the IV of CBC)

The cipher is computed as follows:

`C[i] = enck(iv[i]) xor P[i]`, where:

`iv[0]` = ICB and `iv[i+1]` = `func(iv[i])`, where `func` is an update function applied to the previous iv block; `func` is basically an increment of one of the fields composing the iv block.

Given that the ICB for decryption is the same as the one for encryption, the key stream generated during decryption is the same as the one generated during encryption. Then, the ciphertext is XORed with the key stream in order to retrieve the original plaintext. The decryption operation therefore acts exactly in the same way as the encryption operation.

Figure 226 and *Figure 227* illustrate AES-CTR encryption and decryption, respectively.

Figure 226. AES-CTR mode encryption

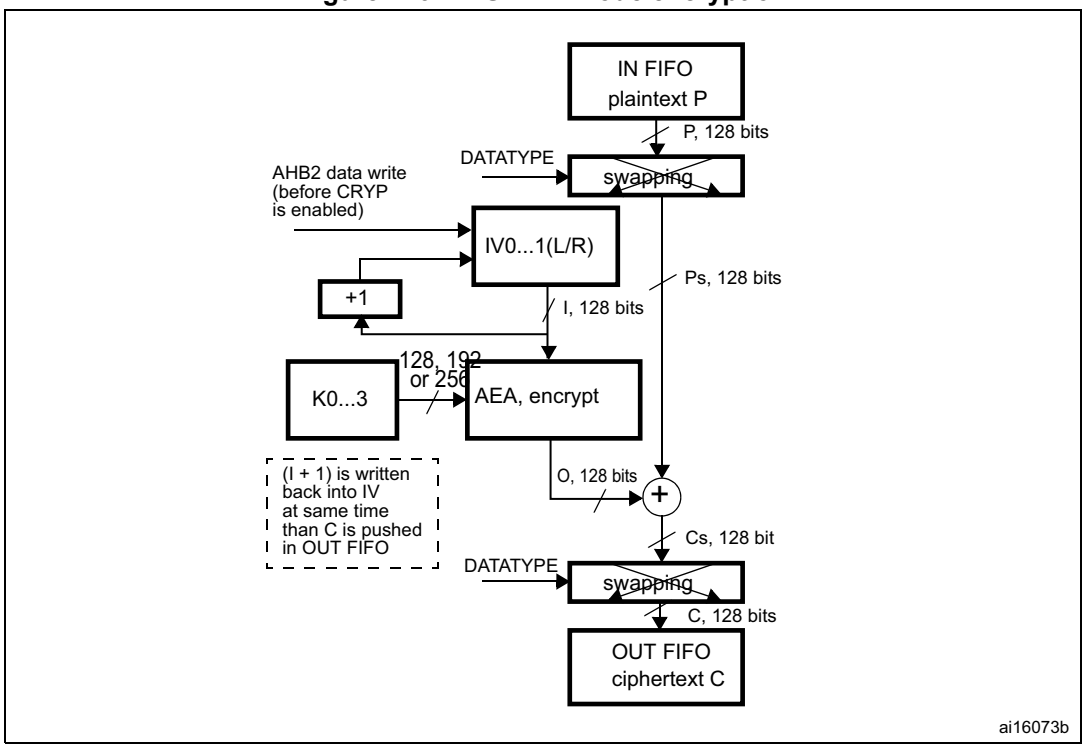

1. K: key; C: cipher text; I: input Block; o: output block; Ps: plain text before swapping (when decoding) or after swapping (when encoding); Cs: cipher text after swapping (when decoding) or before swapping (when encoding); P: plain text; IV: Initialization vectors.

Figure 227. AES-CTR mode decryption

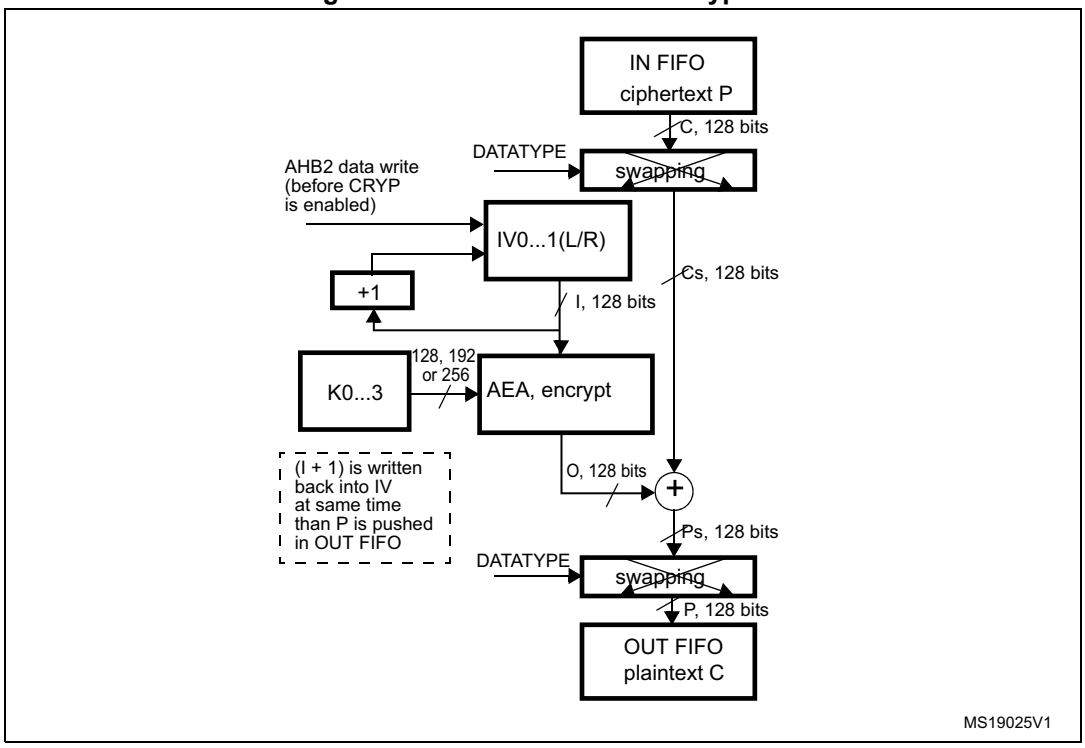

1. K: key; C: cipher text; I: input Block; o: output block; Ps: plain text before swapping (when decoding) or after swapping (when encoding); Cs: cipher text after swapping (when decoding) or before swapping (when encoding); P: plain text; IV: Initialization vectors.

Figure 228 shows the structure of the IV block as defined by the standard [2]. It is composed of three distinct fields.

Figure 228. Initial counter block structure for the Counter mode

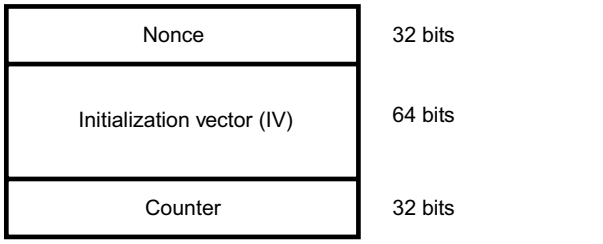

- Nonce is a 32-bit, single-use value. A new nonce should be assigned to each different communication.
- The initialization vector (IV) is a 64-bit value and the standard specifies that the encryptor must choose IV so as to ensure that a given value is used only once for a given key
- The counter is a 32-bit big-endian integer that is incremented each time a block has been encrypted. The initial value of the counter should be set to ‘1’.

The block increments the least significant 32 bits, while it leaves the other (most significant) 96 bits unchanged.

AES Galois/counter mode (GCM)

The AES Galois/counter mode (GCM) allows encrypting and authenticating the plaintext, and generating the correspondent ciphertext and tag (also known as message authentication code or message integrity check). This algorithm is based on AES counter mode to ensure confidentiality. It uses a multiplier over a fixed finite field to generate the tag. An initialization vector is required at the beginning of the algorithm.

The message to be processed is split into 2 parts:

- The header (also knows as additional authentication data): data which is authenticated but no protected (such as information for routing the packet)
- The payload (also knows as plaintext or ciphertext): the message itself which is authenticated and encrypted.

Note: The header must precede the payload and the two parts cannot be mixed together.

The GCM standard requires to pass, at the end of the message, a specific 128-bit block composed of the size of the header (64 bits) and the size of the payload (64 bits). During the computation, the header blocks must be distinguished from the payload blocks.

In GCM mode, four steps are required to perform an encryption/decryption:

1. GCM init phase

   During this first step, the HASH key is calculated and saved internally to be used for processing all the blocks. It is recommended to follow the sequence below:

   a) Make sure that the cryptographic processor is disabled by clearing the CRYPEN bit in the CRYP_CR register.

   b) Select the GCM chaining mode by programming ALGOMODE bits to ‘01000’ in CRYP_CR.

   c) Configure GCM_CCMPH bits to ‘00’ in CRYP_CR to start the GCM Init phase.

   d) Initialize the key registers (128,192 and 256 bits) in CRYP_KEYRx as well as the initialization vector (IV).

   e) Set CRYPEN bit to ‘1’ to start the calculation of the HASH key.

   f) Wait for the CRYPEN bit to be cleared to ‘0’ before moving on to the next phase.

   g) Set the CRYPEN bit to ‘1’.

2. GCM header phase

   This step must be performed after the GCM Init phase:

   h) Set the GCM_CCMPH bits to ‘01’ in CRYP_CR to indicate that the header phase has started.

   i) Write the header data. Three methods can be used:

   – Program the data by blocks of 32 bits into the CRYP_DIN register, and use the IFNF flag to determine if the input FIFO can receive data. The size of the header must be a multiple of 128 bits (4 words).

   – Program the data into the CRYP_DIN register by blocks of 8 words, and use the IFEM flag to determine if the input FIFO can receive data (IFEM=’1’). The size of the header must be a multiple of 128 bits (4 words).

   – Use the DMA.

   j) Once all header data have been supplied, wait until the BUSY bit is cleared in the CRYP_SR register.

3. GCM payload phase (encryption/decryption)

   This step must be performed after the GCM header phase:

   k) Configure GCM_CCMPH to ‘10’ in the CRYP_CR register.

   l) Select the algorithm direction (encryption or decryption) by using the ALGODIR bit in CRYP_CR.

   m) Program the payload message into the CRYP_DIN register, and use the IFNF flag to determine if the input FIFO can receive data. Alternatively, the data could be programmed into the CRYP_DIN register by blocks of 8 words and the IFEM flag used to determine if the input FIFO can receive data (IFEM=’1’). In parallel, the

OFNE/OFFU flag of the CRYP_DOUT register can be monitored to check if the output FIFO is not empty.

n) Repeat the previous step until all payload blocks have been encrypted or decrypted. Alternatively, DMA could be used.

4. GCM final phase

This step generates the authentication tag:

o) Configure GCM_CCMPH[1:0] to '11' in CRYP_CR.

p) Write the input into the CRYP_DIN register 4 times. The input must contain the number of bits in the header (64 bits) concatenated with the number of bits in the payload (64 bits).

q) Wait till the OFNE flag (FIFO output not empty) is set to '1' in the CRYP_SR register.

r) Read the CRYP_DOUT register 4 times: the output corresponds to the authentication tag.

s) Disable the cryptographic processor (CRYPEN bit in CRYP_CR = '0')

Note: When a decryption is performed, it is not required to compute the key at the beginning. At the end of the decryption, the generated tag should be compared with the expected tag passed with the message. In addition, the ALGODIR bit (algorithm direction) must be set to '1'.

No need to disable/enable CRYP processor when moving from header phase to tag phase.

AES Galois message authentication code (GMAC)

The cryptographic processor also supports GMAC to authenticate the plaintext. It uses the GCM algorithm and a multiplier over a fixed finite field to generate the corresponding tag.

An initialization vector is required at the beginning of the algorithm.

Actually, the GMAC algorithm corresponds to the GCM algorithm applied on a message composed of the header only. As a consequence, the payload phase is not required.

AES combined cipher machine (CCM)

The CCM algorithm allows encrypting and authenticating the plaintext, as well as generating the corresponding ciphertext and tag (also known as message authentication code or message integrity check). This algorithm is based on AES counter mode to ensure confidentiality. It uses the AES CBC mode to generate a 128-bit tag.

The CCM standard (RFC 3610 Counter with CBC-MAC (CCM) dated September 2003) defines particular encoding rules for the first authentication block (called B0 in the standard). In particular, the first block includes flags, a nonce and the payload length expressed in bytes. The CCM standard specifies another format, called A or counter, for encryption/decryption. The counter is incremented during the payload phase and its 32 LSB bits are initialized to '1' during the tag generation (called A0 packet in the CCM standard).

Note: The hardware does not perform the formatting operation of the B0 packet. It should be handled by the software.

As for the GCM algorithm, the message to be processed is split into 2 parts:

- The header (also knows as additional authentication data): data which is authenticated but no protected (such as information for routing the packet)
- The payload (also knows as plaintext or ciphertext): the message itself which is authenticated and encrypted.

Note: The header part must precede the payload and the two parts cannot be mixed together.

In CCM mode, 4 steps are required to perform and encryption or decryption:

1. CCM init phase

   In this first step, the B0 packet of the CCM message (1st packet) is programmed into the CRYP_DIN register. During this phase, the CRYP_DOUT register does not contain any output data.

   The following sequence must be followed:

   a) Make sure that the cryptographic processor is disabled by clearing the CRYPEN bit in the CRYP_CR register.
   b) Select the CCM chaining mode by programming the ALGOMODE bits to ‘01001’ in the CRYP_CR register.
   c) Configure the GCM_CCMPH bits to ‘00’ in CRYP_CR to start the CCM Init phase.
   d) Initialize the key registers (128,192 and 256 bits) in CRYP_KEYRx as well as the initialization vector (IV).
   e) Set the CRYPEN bit to ‘1’ in CRYP_CR.
   f) Program the B0 packet into the input data register.
   g) Wait for the CRYPEN bit to be cleared before moving on to the next phase.
   h) Set CRYPEN to ‘1’.

2. CCM header phase

   This step must be performed after the CCM Init phase. The sequence is identical for encryption and decryption.

   During this phase, the CRYP_DOUT register does not contain any output data.

   This phase can be skipped if there is no additional authenticated data.

   The following sequence must be followed:

   i) Set the GCM_CCMPH bit to ’01’ in CRYP_CR to indicate that the header phase has started.
   j) Three methods can be used:

   – Program the header data by blocks of 32 bits into the CRYP_DIN register, and use the IFNF flag to determine if the input FIFO can receive data. The size of the header must be a multiple of 128 bits (4 words).
   – Program the header data into the CRYP_DIN register by blocks of 8 words, and use the IFEM flag to determine if the input FIFO can receive data (IFEM=’1’). The size of the header must be a multiple of 128 bits (4 words).
   – Use the DMA.

Note: The first block B1 must be formatted with the header length. This task should be handled by software.

k) Once all header data have been supplied, wait until the BUSY flag is cleared.

3. CCM payload phase (encryption/decryption)

   This step must be performed after the CCM header phase. During this phase, the encrypted/decrypted payload is stored in the CRYP_DOUT register.

   The following sequence must be followed:

   l) Configure GCM_CCMPH bits to ‘10’ in CRYP_CR.

   m) Select the algorithm direction (encryption or decryption) by using the ALGODIR bit in CRYP_CR.

   n) Program the payload message into the CRYP_DIN register, and use the IFNF flag to determine if the input FIFO can receive data. Alternatively, the data could be programmed into the CRYP_DIN register by blocks of 8 words and the IFEM flag used to determine if the input FIFO can receive data (IFEM=’1’). In parallel, the OFNE/OFFU flag of the CRYP_DOUT register can be monitored to check if the output FIFO is not empty.

   o) Repeat the previous step until all payload blocks have been encrypted or decrypted. Alternatively, DMA could be used.

4. CCM final phase

   This step generates the authentication tag. During this phase, the authentication tag of the message is generated and stored in the CRYP_DOUT register.

   p) Configure GCM_CCMPH[1:0] bits to ‘11’ in CRYP_CR.

   q) Load the A0 initialized counter, and program the 128-bit A0 value by writing 4 times 32 bits into the CRYP_DIN register.

   r) Wait till the OFNE flag (FIFO output not empty) is set to ‘1’ in the CRYP_SR register.

   s) Read the CRYP_DOUT register 4 times: the output corresponds to the encrypted authentication tag.

   t) Disable the cryptographic processor (CRYPEN bit in CRYP_CR = ‘0’)

Note: The hardware does not perform the formatting of the original B0 and B1 packets and the tag comparison between encryption and decryption. They have to be handled by software.

The cryptographic *processor does not need to be disabled/enabled when moving from the header phase to the tag phase.*

AES cipher message authentication code (CMAC)

The CMAC algorithm allows authenticating the plaintext, and generating the corresponding tag. The CMAC sequence is identical to the CCM one, except that the payload phase is skipped.

23.3.3 Data type

Data enter the CRYP processor 32 bits (word) at a time as they are written into the CRYP_DIN register. The principle of the DES is that streams of data are processed 64 bits by 64 bits and, for each 64-bit block, the bits are numbered from M1 to M64, with M1 the left-most bit and M64 the right-most bit of the block. The same principle is used for the AES, but with a 128-bit block size.

The system memory organization is little-endian: whatever the data type (bit, byte, 16-bit half-word, 32-bit word) used, the least-significant data occupy the lowest address locations. A bit, byte, or half-word swapping operation (depending on the kind of data to be encrypted) therefore has to be performed on the data read from the IN FIFO before they enter the CRYP processor. The same swapping operation should be performed on the CRYP data before they are written into the OUT FIFO. For example, the operation would be byte swapping for an ASCII text stream.

The kind of data to be processed is configured with the DATATYPE bitfield in the CRYP control register (CRYP_CR).

Table 113. Data types

DATATYPE in CRYP_CR	Swapping performed	System memory data (plaintext or cypher)
00b	No swapping	Example: TDES block value **0xABCD77206973FE01** is represented in system memory as: 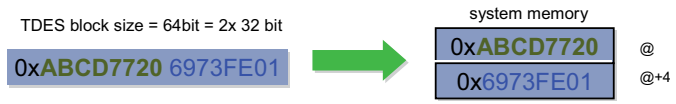
01b	Half-word (16-bit) swapping	Example: TDES block value **0xABCD77206973FE01** is represented in system memory as: 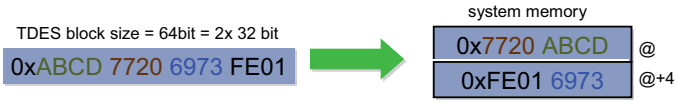
10b	Byte (8-bit) swapping	Example: TDES block value **0xABCD77206973FE01** is represented in system memory as: 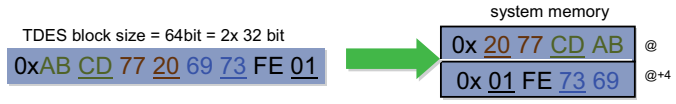
11b	Bit swapping	TDES block value **0x4E6F772069732074** is represented in system memory as: 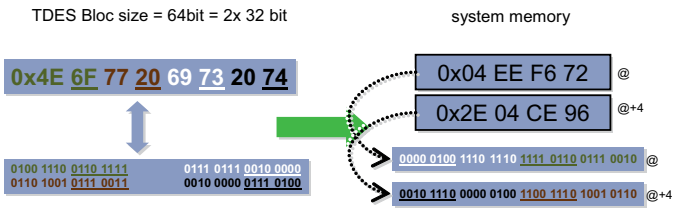

Figure 229 shows how the 64-bit data block M1...64 is constructed from two consecutive 32-bit words popped off the IN FIFO by the CRYP processor, according to the DATATYPE value. The same schematic can easily be extended to form the 128-bit block for the AES

cryptographic algorithm (for the AES, the block length is four 32-bit words, but swapping only takes place at word level, so it is identical to the one described here for the TDES).

Note: The same swapping is performed between the IN FIFO and the CRYP data block, and between the CRYP data block and the OUT FIFO.

Figure 229. 64-bit block construction according to DATATYPE

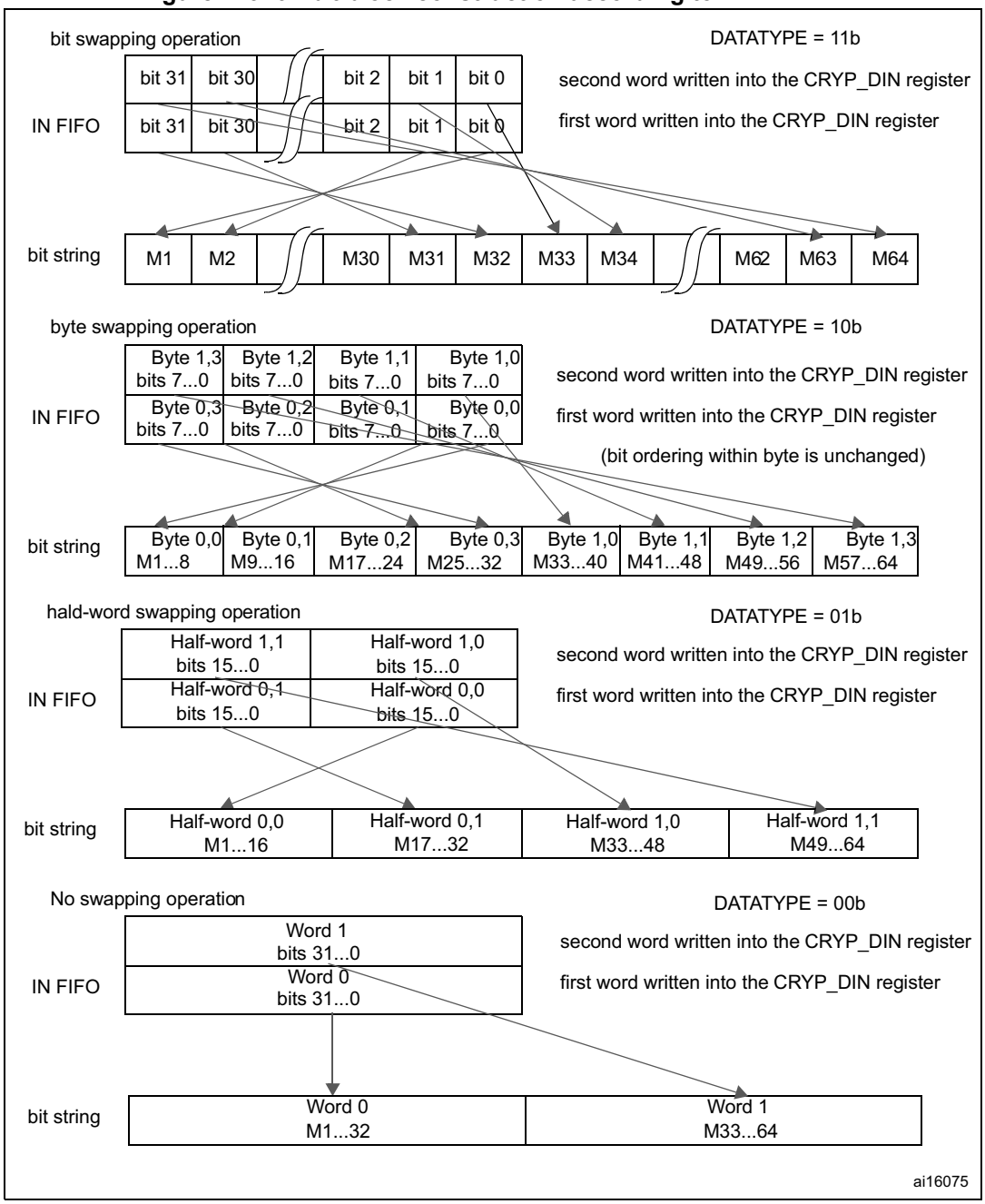

23.3.4 Initialization vectors - CRYP_IV0...1(L/R)

Initialization vectors are considered as two 64-bit data items. They therefore do not have the same data format and representation in system memory as plaintext or cypher data, and they are not affected by the DATATYPE value.

Initialization vectors are defined by two consecutive 32-bit words, CRYP_IVL (left part, noted as bits IV1...32) and CRYP_IVR (right part, noted as bits IV33...64).

During the DES or TDES CBC encryption, the CRYP_IV0(L/R) bits are XORed with the 64-bit data block popped off the IN FIFO after swapping (according to the DATATYPE value), that is, with the M1...64 bits of the data block. When the output of the DEA3 block is available, it is copied back into the CRYP_IV0(L/R) vector, and this new content is XORed with the next 64-bit data block popped off the IN FIFO, and so on.

During the DES or TDES CBC decryption, the CRYP_IV0(L/R) bits are XORed with the 64-bit data block (that is, with the M1...64 bits) delivered by the TDEA1 block before swapping (according to the DATATYPE value), and pushed into the OUT FIFO. When the XORed result is swapped and pushed into the OUT FIFO, the CRYP_IV0(L/R) value is replaced by the output of the IN FIFO, then the IN FIFO is popped, and a new 64-bit data block can be processed.

During the AES CBC encryption, the CRYP_IV0...1(L/R) bits are XORed with the 128-bit data block popped off the IN FIFO after swapping (according to the DATATYPE value). When the output of the AES core is available, it is copied back into the CRYP_IV0...1(L/R) vector, and this new content is XORed with the next 128-bit data block popped off the IN FIFO, and so on.

During the AES CBC decryption, the CRYP_IV0...1(L/R) bits are XORed with the 128-bit data block delivered by the AES core before swapping (according to the DATATYPE value) and pushed into the OUT FIFO. When the XORed result is swapped and pushed into the OUT FIFO, the CRYP_IV0...1(L/R) value is replaced by the output of the IN FIFO, then the IN FIFO is popped, and a new 128-bit data block can be processed.

During the AES CTR encryption or decryption, the CRYP_IV0...1(L/R) bits are encrypted by the AES core. Then the result of the encryption is XORed with the 128-bit data block popped off the IN FIFO after swapping (according to the DATATYPE value). When the XORed result is swapped and pushed into the OUT FIFO, the counter part of the CRYP_IV0...1(L/R) value (32 LSB) is incremented.

Any write operation to the CRYP_IV0...1(L/R) registers when bit BUSY = 1b in the CRYP_SR register is disregarded (CRYP_IV0...1(L/R) register content not modified). Thus, you must check that bit BUSY = 0b before modifying initialization vectors.

Figure 230. Initialization vectors use in the TDES-CBC encryption

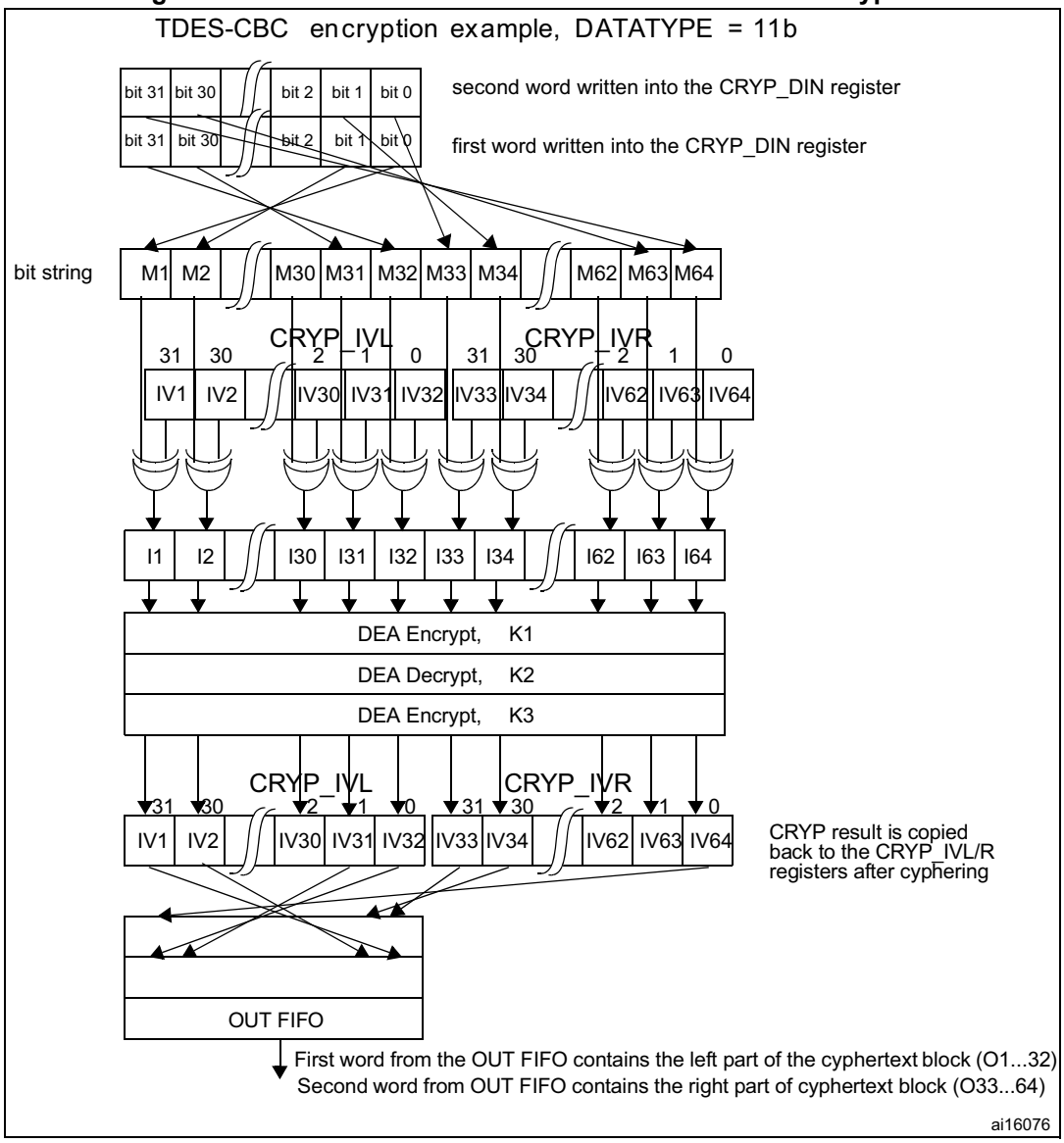

23.3.5 CRYP busy state

When there is enough data in the input FIFO (at least 2 words for the DES or TDES algorithm mode, 4 words for the AES algorithm mode) and enough free-space in the output FIFO (at least 2 (DES/TDES) or 4 (AES) word locations), and when the bit CRYPEN = 1 in the CRYP_CR register, then the cryptographic processor automatically starts an encryption or decryption process (according to the value of the ALGODIR bit in the CRYP_CR register).

This process takes 48 AHB2 clock cycles for the Triple-DES algorithm, 16 AHB2 clock cycles for the simple DES algorithm, and 14, 16 or 18 AHB2 clock cycles for the AES with key lengths of 128, 192 or 256 bits, respectively. During the whole process, the BUSY bit in the CRYP_SR register is set to ‘1’. At the end of the process, two (DES/TDES) or four (AES) words are written by the CRYP Core into the output FIFO, and the BUSY bit is cleared. In

the CBC, CTR mode, the initialization vectors CRYP_IVx(L/R)R (x = 0..3) are updated as well.

A write operation to the key registers (CRYP_Kx(L/R)R, x = 0..3), the initialization registers (CRYP_IVx(L/R)R, x = 0..3), or to bits [9:2] in the CRYP_CR register are ignored when the cryptographic processor is busy (bit BUSY = 1b in the CRYP_SR register), and the registers are not modified. It is thus not possible to modify the configuration of the cryptographic processor while it is processing a block of data. It is however possible to clear the CRYPEN bit while BUSY = 1, in which case the ongoing DES, TDES or AES processing is completed and the two/four word results are written into the output FIFO, and then, only then, the BUSY bit is cleared.

Note: When a block is being processed in the DES or TDES mode, if the output FIFO becomes full and if the input FIFO contains at least one new block, then the new block is popped off the input FIFO and the BUSY bit remains high until there is enough space to store this new block into the output FIFO.

23.3.6 Procedure to perform an encryption or a decryption

Initialization

1. Initialize the peripheral (the order of operations is not important except for the key preparation for AES-ECB or AES-CBC decryption. The key size and the key value must be entered before preparing the key and the algorithm must be configured once the key has been prepared):
   a) Configure the key size (128-, 192- or 256-bit, in the AES only) with the KEYSIZE bits in the CRYP_CR register
   b) Write the symmetric key into the CRYP_KxL/R registers (2 to 8 registers to be written depending on the algorithm)
   c) Configure the data type (1-, 8-, 16- or 32-bit), with the DATATYPE bits in the CRYP_CR register
   d) In case of decryption in AES-ECB or AES-CBC, you must prepare the key: configure the key preparation mode by setting the ALGOMODE bits to ‘111’ in the CRYP_CR register. Then write the CRYPEN bit to ‘1’: the BUSY bit is set. Wait until BUSY returns to 0 (CRYPEN is automatically cleared as well): the key is prepared for decryption
   e) Configure the algorithm and chaining (the DES/TDES in ECB/CBC, the AES in ECB/CBC/CTR/GCM/CCM) with the ALGOMODE bits in the CRYP_CR register
   f) Configure the direction (encryption/decryption), with the ALGODIR bit in the CRYP_CR register
   g) Write the initialization vectors into the CRYP_IVxL/R register (in CBC or CTR modes only)
2. Flush the IN and OUT FIFOs by writing the FFLUSH bit to 1 in the CRYP_CR register

Processing when the DMA is used to transfer the data from/to the memory

1. Configure the DMA controller to transfer the input data from the memory. The transfer length is the length of the message. As message padding is not managed by the peripheral, the message length must be an entire number of blocks. The data are transferred in burst mode. The burst length is 4 words in the AES and 2 or 4 words in

the DES/TDES. The DMA should be configured to set an interrupt on transfer completion of the output data to indicate that the processing is finished.

2. Enable the cryptographic processor by writing the CRYPEN bit to 1. Enable the DMA requests by setting the DIEN and DOEN bits in the CRYP_DMACR register.
3. All the transfers and processing are managed by the DMA and the cryptographic processor. The DMA interrupt indicates that the processing is complete. Both FIFOs are normally empty and BUSY = 0.

Processing when the data are transferred by the CPU during interrupts

1. Enable the interrupts by setting the INIM and OUTIM bits in the CRYP_IMSCR register.
2. Enable the cryptographic processor by setting the CRYPEN bit in the CRYP_CR register.
3. In the interrupt managing the input data: load the input message into the IN FIFO. You can load 2 or 4 words at a time, or load data until the FIFO is full. When the last word of the message has been entered into the FIFO, disable the interrupt by clearing the INIM bit.
4. In the interrupt managing the output data: read the output message from the OUT FIFO. You can read 1 block (2 or 4 words) at a time or read data until the FIFO is empty. When the last word has been read, INIM=0, BUSY=0 and both FIFOs are empty (IFEM=1 and OFNE=0). You can disable the interrupt by clearing the OUTIM bit and, the peripheral by clearing the CRYPEN bit.

Processing without using the DMA nor interrupts

1. Enable the cryptographic processor by setting the CRYPEN bit in the CRYP_CR register.
2. Write the first blocks in the input FIFO (2 to 8 words).
3. Repeat the following sequence until the complete message has been processed:
   a) Wait for OFNE=1, then read the OUT-FIFO (1 block or until the FIFO is empty)
   b) Wait for IFNF=1, then write the IN FIFO (1 block or until the FIFO is full)
4. At the end of the processing, BUSY=0 and both FIFOs are empty (IFEM=1 and OFNE=0). You can disable the peripheral by clearing the CRYPEN bit.

23.3.7 Context swapping

If a context switching is needed because a new task launched by the OS requires this resource, the following tasks have to be performed for full context restoration (example when the DMA is used):

Case of the AES and DES

1. Context saving
   a) Stop DMA transfers on the IN FIFO by clearing the DIEN bit in the CRYP_DMACR register.
   b) Wait until both the IN and OUT FIFOs are empty (IFEM=1 and OFNE=0 in the CRYP_SR register) and the BUSY bit is cleared.
   c) Stop DMA transfers on the OUT FIFO by writing the DOEN bit to 0 in the CRYP_DMACR register and clear the CRYPEN bit.
   d) Save the current configuration (bits [9:2] and bits 19 in the CRYP_CR register) and, if not in ECB mode, the initialization vectors. The key value must already be available in the memory. When needed, save the DMA status (pointers for IN and OUT messages, number of remaining bytes, etc.).

      Additional bits should be saved when GCM/GMAC or CCM/CMAC algorithms are used:
   – bits [17:16] in the CRYP_CR register
   – context swap registers:

      CRYP_CSGCMCCM0..7 for GCM/GMAC or CCM/CMAC algorithm

      CRYP_CSGCM0..7 for GCM/GMAC algorithm.
2. Configure and execute the other processing.
3. Context restoration
   a) Configure the processor as in *Section 23.3.6: Procedure to perform an encryption or a decryption on page 744*, *Initialization* with the saved configuration. For the AES-ECB or AES-CBC decryption, the key must be prepared again.
   b) If needed, reconfigure the DMA controller to transfer the rest of the message.
   c) Enable the processor by setting the CRYPEN bit and, the DMA requests by setting the DIEN and DOEN bits.

Case of the TDES

Context swapping can be done in the TDES in the same way as in the AES. But as the input FIFO can contain up to 4 unprocessed blocks and as the processing duration per block is higher, it can be faster in certain cases to interrupt the processing without waiting for the IN FIFO to be empty.

1. Context saving
   a) Stop DMA transfers on the IN FIFO by clearing the DIEN bit in the CRYP_DMACR register.
   b) Disable the processor by clearing the CRYPEN bit (the processing will stop at the end of the current block).
   c) Wait until the OUT FIFO is empty (OFNE=0 in the CRYP_SR register) and the BUSY bit is cleared.
   d) Stop DMA transfers on the OUT FIFO by writing the DOEN bit to 0 in the CRYP_DMACR register.
   e) Save the current configuration (bits [9:2] and bits 19 in the CRYP_CR register) and, if not in ECB mode, the initialization vectors. The key value must already be available in the memory. When needed, save the DMA status (pointers for IN and OUT messages, number of remaining bytes, etc.). Read back the data loaded in

the IN FIFO that have not been processed and save them in the memory until the FIFO is empty.

Note: In GCM/GMAC or CCM/CMAC mode, bits [17:16] of the CRYP_CR register should also be saved.

2. Configure and execute the other processing.
3. Context restoration
   a) Configure the processor as in *Section 23.3.6: Procedure to perform an encryption or a decryption on page 744*, *Initialization* with the saved configuration. For the AES-ECB or AES-CBC decryption, the key must be prepared again.
   b) Write the data that were saved during context saving into the IN FIFO.
   c) If needed, reconfigure the DMA controller to transfer the rest of the message.
   d) Enable the processor by setting the CRYPEN bit and, the DMA requests by setting the DIEN and DOEN bits.

23.4 CRYP interrupts

There are two individual maskable interrupt sources generated by the CRYP. These two sources are combined into a single interrupt signal, which is the only interrupt signal from the CRYP that drives the NVIC (nested vectored interrupt controller). This combined interrupt, which is an OR function of the individual masked sources, is asserted if any of the individual interrupts listed below is asserted and enabled.

You can enable or disable the interrupt sources individually by changing the mask bits in the CRYP_IMSCR register. Setting the appropriate mask bit to ‘1’ enables the interrupt.

The status of the individual interrupt sources can be read either from the CRYP_RISR register, for raw interrupt status, or from the CRYP_MISR register, for the masked interrupt status.

Output FIFO service interrupt - OUTMIS

The output FIFO service interrupt is asserted when there is one or more (32-bit word) data items in the output FIFO. This interrupt is cleared by reading data from the output FIFO until there is no valid (32-bit) word left (that is, the interrupt follows the state of the OFNE (output FIFO not empty) flag).

The output FIFO service interrupt OUTMIS is NOT enabled with the CRYP enable bit. Consequently, disabling the CRYP will not force the OUTMIS signal low if the output FIFO is not empty.

Input FIFO service interrupt - INMIS

The input FIFO service interrupt is asserted when there are less than four words in the input FIFO. It is cleared by performing write operations to the input FIFO until it holds four or more words.

The input FIFO service interrupt INMIS is enabled with the CRYP enable bit. Consequently, when CRYP is disabled, the INMIS signal is low even if the input FIFO is empty.

Figure 231. CRYP interrupt mapping diagram

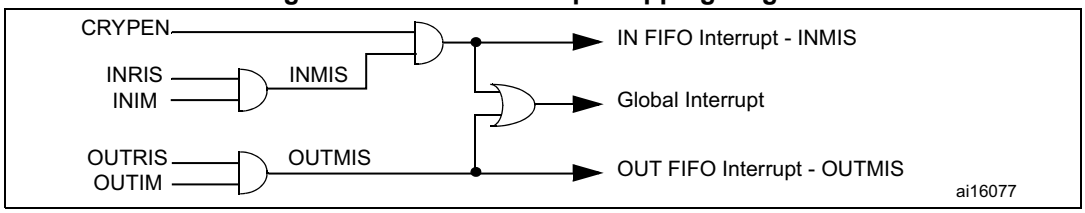

23.5 CRYP DMA interface

The cryptographic processor provides an interface to connect to the DMA controller. The DMA operation is controlled through the CRYP DMA control register, CRYP_DMACR.

The burst and single transfer request signals are not mutually exclusive. They can both be asserted at the same time. For example, when there are 6 words available in the OUT FIFO, the burst transfer request and the single transfer request are asserted. After a burst transfer of 4 words, the single transfer request only is asserted to transfer the last 2 available words. This is useful for situations where the number of words left to be received in the stream is less than a burst.

Each request signal remains asserted until the relevant DMA clear signal is asserted. After the request clear signal is deasserted, a request signal can become active again, depending on the above described conditions. All request signals are deasserted if the CRYP peripheral is disabled or the DMA enable bit is cleared (DIEN bit for the IN FIFO and DOEN bit for the OUT FIFO in the CRYP_DMACR register).

Note: The DMA controller must be configured to perform burst of 4 words or less. Otherwise some data could be lost.

In order to let the DMA controller empty the OUT FIFO before filling up the IN FIFO, the OUTDMA channel should have a higher priority than the INDMA channel.

23.6 CRYP registers

The cryptographic core is associated with several control and status registers, eight key registers and four initialization vectors registers.

23.6.1 CRYP control register (CRYP_CR) for STM32F415/417xx

Address offset: 0x00

Reset value: 0x0000 0000

31	30	29	28	27	26	25	24	23	22	21	20	19	18	17	16
Reserved															

15	14	13	12	11	10	9	8	7	6	5	4	3	2	1	0
CRYPEN	FFLUSH	Reserved				KEYSIZE		DATATYPE		ALGOMODE[2:0]			ALGODIR	Res.	Res.
rw	w					rw	rw	rw	rw	rw	rw	rw	rw		

Bits 31:18 Reserved, must be kept at reset value

Bits 17:16 Reserved, must be kept at reset value

Bit 15 **CRYPEN:** Cryptographic processor enable

0: CRYP processor is disabled
1: CRYP processor is enabled

Note: The CRYPEN bit is automatically cleared by hardware when the key preparation process ends (ALGOMODE=111b) or GCM_CCM init Phase

Bit 14 **FFLUSH:** FIFO flush

When CRYPEN = 0, writing this bit to 1 flushes the IN and OUT FIFOs (that is read and write pointers of the FIFOs are reset. Writing this bit to 0 has no effect.
When CRYPEN = 1, writing this bit to 0 or 1 has no effect.
Reading this bit always returns 0.

Bits 13:10 Reserved, must be kept at reset value

Bits 9:8 **KEYSIZE[1:0]:** Key size selection (AES mode only)

This bitfield defines the bit-length of the key used for the AES cryptographic core. This bitfield is 'don't care' in the DES or TDES modes.
00: 128 bit key length
01: 192 bit key length
10: 256 bit key length
11: Reserved, do not use this value

Bits 7:6 **DATATYPE[1:0]:** Data type selection

This bitfield defines the format of data entered in the CRYP_DIN register (refer to *Section 23.3.3: Data type*).
00: 32-bit data. No swapping of each word. First word pushed into the IN FIFO (or popped off the OUT FIFO) forms bits 1...32 of the data block, the second word forms bits 33...64.
01: 16-bit data, or half-word. Each word pushed into the IN FIFO (or popped off the OUT FIFO) is considered as 2 half-words, which are swapped with each other.
10: 8-bit data, or bytes. Each word pushed into the IN FIFO (or popped off the OUT FIFO) is considered as 4 bytes, which are swapped with each other.
11: bit data, or bit-string. Each word pushed into the IN FIFO (or popped off the OUT FIFO) is considered as 32 bits (1st bit of the string at position 0), which are swapped with each other.

Bits 5:3 **ALGOMODE[2:0]:** Algorithm mode

000: TDES-ECB (triple-DES Electronic codebook): no feedback between blocks of data. Initialization vectors (CRYP_IV0(L/R)) are not used, three key vectors (K1, K2, and K3) are used (K0 is not used).

001: TDES-CBC (triple-DES Cipher block chaining): output block is XORed with the subsequent input block before its entry into the algorithm. Initialization vectors (CRYP_IV0L/R) must be initialized, three key vectors (K1, K2, and K3) are used (K0 is not used).

010: DES-ECB (simple DES Electronic codebook): no feedback between blocks of data. Initialization vectors (CRYP_IV0L/R) are not used, only one key vector (K1) is used (K0, K2, K3 are not used).

011: DES-CBC (simple DES Cipher block chaining): output block is XORed with the subsequent input block before its entry into the algorithm. Initialization vectors (CRYP_IV0L/R) must be initialized. Only one key vector (K1) is used (K0, K2, K3 are not used).

100: AES-ECB (AES Electronic codebook): no feedback between blocks of data. Initialization vectors (CRYP_IV0L/R...1L/R) are not used. All four key vectors (K0...K3) are used.

101: AES-CBC (AES Cipher block chaining): output block is XORed with the subsequent input block before its entry into the algorithm. Initialization vectors (CRYP_IV0L/R...1L/R) must be initialized. All four key vectors (K0...K3) are used.

110: AES-CTR (AES counter mode): output block is XORed with the subsequent input block before its entry into the algorithm. Initialization vectors (CRYP_IV0L/R...1L/R) must be initialized. All four key vectors (K0...K3) are used. CTR decryption does not differ from CTR encryption, since the core always encrypts the current counter block to produce the key stream that will be XORed with the plaintext or cipher in input. Thus, ALGODIR is don't care when ALGOMODE = 110b, and the key must NOT be unrolled (prepared) for decryption.

111: AES key preparation for decryption mode. Writing this value when CRYPEN = 1 immediately starts an AES round for key preparation. The secret key must have previously been loaded into the K0...K3 registers. The BUSY bit in the CRYP_SR register is set during the key preparation. After key processing, the resulting key is copied back into the K0...K3 registers, and the BUSY bit is cleared.

Bit 2 **ALGODIR:** Algorithm direction

0: Encrypt
1: Decrypt

Bits 1:0 Reserved, must be kept at reset value

Note: Writing to the KEYSIZE, DATATYPE, ALGOMODE and ALGODIR bits while BUSY=1 has no effect. These bits can only be configured when BUSY=0.
The FFLUSH bit has to be set only when BUSY=0. If not, the FIFO is flushed, but the block being processed may be pushed into the output FIFO just after the flush operation, resulting in a nonempty FIFO condition.

23.6.2 CRYP control register (CRYP_CR) for STM32F415/417xx

Address offset: 0x00

Reset value: 0x0000 0000

31	30	29	28	27	26	25	24	23	22	21	20	19	18	17	16
Reserved												ALGO MODE [3]	Res.	GCM_CCMPH	
												rw		rw	rw

15	14	13	12	11	10	9	8	7	6	5	4	3	2	1	0
CRYPEN	FFLUSH	Reserved				KEYSIZE		DATATYPE		ALGOMODE[2:0]			ALGODIR	Reserved	
rw	w					rw	rw	rw	rw	rw	rw	rw	rw		

Bits 31:20 Reserved, forced by hardware to 0.

Bit 18 Reserved, forced by hardware to 0.

Bits 17:16 GCM_CCMPH[1:0]: no effect if “GCM or CCM algorithm” is not set

00: GCM_CCM init Phase
01: GCM_CCM header phase
10: GCM_CCM payload phase
11: GCM_CCM final phase

Bit 15 **CRYPEN:** Cryptographic processor enable

0: CRYP processor is disabled
1: CRYP processor is enabled

Note: The CRYPEN bit is automatically cleared by hardware when the key preparation process ends (ALGOMODE=111b) or GCM_CCM init Phase

Bit 14 **FFLUSH:** FIFO flush

When CRYPEN = 0, writing this bit to 1 flushes the IN and OUT FIFOs (that is read and write pointers of the FIFOs are reset. Writing this bit to 0 has no effect.
When CRYPEN = 1, writing this bit to 0 or 1 has no effect.
Reading this bit always returns 0.

Bits 13:10 Reserved, forced by hardware to 0.

Bits 9:8 **KEYSIZE[1:0]:** Key size selection (AES mode only)

This bitfield defines the bit-length of the key used for the AES cryptographic core. This bitfield is ‘don’t care’ in the DES or TDES modes.
00: 128 bit key length
01: 192 bit key length
10: 256 bit key length
11: Reserved, do not use this value

Bits 7:6 **DATATYPE[1:0]:** Data type selection

This bitfield defines the format of data entered in the CRYP_DIN register (refer to *Section 23.3.3: Data type*).
00: 32-bit data. No swapping of each word. First word pushed into the IN FIFO (or popped off the OUT FIFO) forms bits 1...32 of the data block, the second word forms bits 33...64.
01: 16-bit data, or half-word. Each word pushed into the IN FIFO (or popped off the OUT FIFO) is considered as 2 half-words, which are swapped with each other.
10: 8-bit data, or bytes. Each word pushed into the IN FIFO (or popped off the OUT FIFO) is considered as 4 bytes, which are swapped with each other.
11: bit data, or bit-string. Each word pushed into the IN FIFO (or popped off the OUT FIFO) is considered as 32 bits (1st bit of the string at position 0), which are swapped with each other.

Bits 19 and 5:3 **ALGOMODE[3:0]:** Algorithm mode

0000: TDES-ECB (triple-DES Electronic codebook): no feedback between blocks of data. Initialization vectors (CRYP_IV0(L/R)) are not used, three key vectors (K1, K2, and K3) are used (K0 is not used).

0001: TDES-CBC (triple-DES Cipher block chaining): output block is XORed with the subsequent input block before its entry into the algorithm. Initialization vectors (CRYP_IV0L/R) must be initialized, three key vectors (K1, K2, and K3) are used (K0 is not used).

0010: DES-ECB (simple DES Electronic codebook): no feedback between blocks of data. Initialization vectors (CRYP_IV0L/R) are not used, only one key vector (K1) is used (K0, K2, K3 are not used).

0011: DES-CBC (simple DES Cipher block chaining): output block is XORed with the subsequent input block before its entry into the algorithm. Initialization vectors (CRYP_IV0L/R) must be initialized. Only one key vector (K1) is used (K0, K2, K3 are not used).

0100: AES-ECB (AES Electronic codebook): no feedback between blocks of data. Initialization vectors (CRYP_IV0L/R...1L/R) are not used. All four key vectors (K0...K3) are used.

0101: AES-CBC (AES Cipher block chaining): output block is XORed with the subsequent input block before its entry into the algorithm. Initialization vectors (CRYP_IV0L/R...1L/R) must be initialized. All four key vectors (K0...K3) are used.

0110: AES-CTR (AES Counter mode): output block is XORed with the subsequent input block before its entry into the algorithm. Initialization vectors (CRYP_IV0L/R...1L/R) must be initialized. All four key vectors (K0...K3) are used. CTR decryption does not differ from CTR encryption, since the core always encrypts the current counter block to produce the key stream that will be XORed with the plaintext or cipher in input. Thus, ALGODIR is don't care when ALGOMODE = 110b, and the key must NOT be unrolled (prepared) for decryption.

0111: AES key preparation for decryption mode. Writing this value when CRYPEN = 1 immediately starts an AES round for key preparation. The secret key must have previously been loaded into the K0...K3 registers. The BUSY bit in the CRYP_SR register is set during the key preparation. After key processing, the resulting key is copied back into the K0...K3 registers, and the BUSY bit is cleared.

1000: Galois Counter Mode (GCM). This algorithm mode is also used for the GMAC algorithm.

1001: Counter with CBC-MAC (CCM). This algorithm mode is also used for the CMAC algorithm.

Bit 2 **ALGODIR:** Algorithm direction

0: Encrypt

1: Decrypt

Bits 1:0 Reserved, must be kept to 0.

Note: Writing to the KEYSIZE, DATATYPE, ALGOMODE and ALGODIR bits while BUSY=1 has no effect. These bits can only be configured when BUSY=0.
The FFLUSH bit has to be set only when BUSY=0. If not, the FIFO is flushed, but the block being processed may be pushed into the output FIFO just after the flush operation, resulting in a nonempty FIFO condition.

23.6.3 CRYP status register (CRYP_SR)

Address offset: 0x04

Reset value: 0x0000 0003

31	30	29	28	27	26	25	24	23	22	21	20	19	18	17	16
Reserved															
15	14	13	12	11	10	9	8	7	6	5	4	3	2	1	0
Reserved											BUSY	OFFU	OFNE	IFNF	IFEM
											r	r	r	r	r

Bits 31:5 Reserved, must be kept at reset value

Bit 4 **BUSY:** Busy bit

0: The CRYP Core is not processing any data. The reason is either that:

– the CRYP core is disabled (CRYPEN=0 in the CRYP_CR register) and the last processing has completed, or

– The CRYP core is waiting for enough data in the input FIFO or enough free space in the output FIFO (that is in each case at least 2 words in the DES, 4 words in the AES).

1: The CRYP core is currently processing a block of data or a key preparation (for AES decryption).

Bit 3 **OFFU:** Output FIFO full

0: Output FIFO is not full
1: Output FIFO is full

Bit 2 **OFNE:** Output FIFO not empty

0: Output FIFO is empty
1: Output FIFO is not empty

Bit 1 **IFNF:** Input FIFO not full

0: Input FIFO is full
1: Input FIFO is not full

Bit 0 **IFEM:** Input FIFO empty

0: Input FIFO is not empty
1: Input FIFO is empty

23.6.4 CRYP data input register (CRYP_DIN)

Address offset: 0x08

Reset value: 0x0000 0000

The CRYP_DIN register is the data input register. It is 32-bit wide. It is used to enter up to four 64-bit (TDES) or two 128-bit (AES) plaintext (when encrypting) or ciphertext (when decrypting) blocks into the input FIFO, one 32-bit word at a time.

The first word written into the FIFO is the MSB of the input block. The LSB of the input block is written at the end. Disregarding the data swapping, this gives:

- In the DES/TDES modes: a block is a sequence of bits numbered from bit 1 (leftmost bit) to bit 64 (rightmost bit). Bit 1 corresponds to the MSB (bit 31) of the first word entered into the FIFO, bit 64 corresponds to the LSB (bit 0) of the second word entered into the FIFO.
- In the AES mode: a block is a sequence of bits numbered from 0 (leftmost bit) to 127 (rightmost bit). Bit 0 corresponds to the MSB (bit 31) of the first word written into the FIFO, bit 127 corresponds to the LSB (bit 0) of the 4th word written into the FIFO.

To fit different data sizes, the data written in the CRYP_DIN register can be swapped before being processed by configuring the DATATYPE bits in the CRYP_CR register. Refer to *Section 23.3.3: Data type on page 739* for more details.

When CRYP_DIN register is written to, the data are pushed into the input FIFO. When at least two 32-bit words in the DES/TDES mode (or four 32-bit words in the AES mode) have been pushed into the input FIFO, and when at least 2 words are free in the output FIFO, the CRYP engine starts an encrypting or decrypting process. This process takes two 32-bit words in the DES/TDES mode (or four 32-bit words in the AES mode) from the input FIFO and delivers two 32-bit words (or 4, respectively) to the output FIFO per process round.

When CRYP_DIN register is read:

- If CRYPEN = 0, the FIFO is popped, and then the data present in the Input FIFO are returned, from the oldest one (first reading) to the newest one (last reading). The IFEM flag must be checked before each read operation to make sure that the FIFO is not empty.
- if CRYPEN = 1, an undefined value is returned.

After the CRYP_DIN register has been read once or several times, the FIFO must be flushed by setting the FFLUSH bit prior to processing new data.

31	30	29	28	27	26	25	24	23	22	21	20	19	18	17	16
DATAIN															
rw	rw	rw	rw	rw	rw	rw	rw	rw	rw	rw	rw	rw	rw	rw	rw
15	14	13	12	11	10	9	8	7	6	5	4	3	2	1	0
DATAIN															
rw	rw	rw	rw	rw	rw	rw	rw	rw	rw	rw	rw	rw	rw	rw	rw

Bits 31:0 **DATAIN:** Data input

Read = returns Input FIFO content if CRYPEN = 0, else returns an undefined value.

Write = Input FIFO is written.

23.6.5 CRYP data output register (CRYP_DOUT)

Address offset: 0x0C

Reset value: 0x0000 0000

The CRYP_DOUT register is the data output register. It is read-only and 32-bit wide. It is used to retrieve up to four 64-bit (TDES mode) or two 128-bit (AES mode) ciphertext (when encrypting) or plaintext (when decrypting) blocks from the output FIFO, one 32-bit word at a time.

Like for the input data, the MSB of the output block is the first word read from the output FIFO. The LSB of the output block is read at the end. Disregarding data swapping, this gives:

- In the DES/TDES modes: Bit 1 (leftmost bit) corresponds to the MSB (bit 31) of the first word read from the FIFO, bit 64 (rightmost bit) corresponds to the LSB (bit 0) of the second word read from the FIFO.
- In the AES mode: Bit 0 (leftmost bit) corresponds to the MSB (bit 31) of the first word read from the FIFO, bit 127 (rightmost bit) corresponds to the LSB (bit 0) of the 4th word read from the FIFO.

To fit different data sizes, the data can be swapped after processing by configuring the DATATYPE bits in the CRYP_CR register. Refer to *Section 23.3.3: Data type on page 739* for more details.

When CRYP_DOUT register is read, the last data entered into the output FIFO (pointed to by the read pointer) is returned.

31	30	29	28	27	26	25	24	23	22	21	20	19	18	17	16
DATAOUT															
r	r	r	r	r	r	r	r	r	r	r	r	r	r	r	r
15	14	13	12	11	10	9	8	7	6	5	4	3	2	1	0
DATAOUT															
r	r	r	r	r	r	r	r	r	r	r	r	r	r	r	r

Bits 31:0 **DATAOUT:** Data output
Read = returns output FIFO content.
Write = No effect.

23.6.6 CRYP DMA control register (CRYP_DMACR)

Address offset: 0x10

Reset value: 0x0000 0000

31	30	29	28	27	26	25	24	23	22	21	20	19	18	17	16
Reserved															
15	14	13	12	11	10	9	8	7	6	5	4	3	2	1	0
Reserved														DOEN	DIEN
														rw	rw

Bits 31:2 Reserved, must be kept at reset value

Bit 1 **DOEN:** DMA output enable

0: DMA for outgoing data transfer is disabled
1: DMA for outgoing data transfer is enabled

Bit 0 **DIEN:** DMA input enable

0: DMA for incoming data transfer is disabled
1: DMA for incoming data transfer is enabled

23.6.7 CRYP interrupt mask set/clear register (CRYP_IMSCR)

Address offset: 0x14

Reset value: 0x0000 0000

The CRYP_IMSCR register is the interrupt mask set or clear register. It is a read/write register. On a read operation, this register gives the current value of the mask on the relevant interrupt. Writing 1 to the particular bit sets the mask, enabling the interrupt to be read. Writing 0 to this bit clears the corresponding mask. All the bits are cleared to 0 when the peripheral is reset.

31	30	29	28	27	26	25	24	23	22	21	20	19	18	17	16
Reserved															
15	14	13	12	11	10	9	8	7	6	5	4	3	2	1	0
Reserved														OUTIM	INIM
														rw	rw

Bits 31:2 Reserved, must be kept at reset value

Bit 1 **OUTIM:** Output FIFO service interrupt mask

0: Output FIFO service interrupt is masked
1: Output FIFO service interrupt is not masked

Bit 0 **INIM:** Input FIFO service interrupt mask

0: Input FIFO service interrupt is masked
1: Input FIFO service interrupt is not masked

23.6.8 CRYP raw interrupt status register (CRYP_RISR)

Address offset: 0x18

Reset value: 0x0000 0001

The CRYP_RISR register is the raw interrupt status register. It is a read-only register. On a read, this register gives the current raw status of the corresponding interrupt prior to masking. A write has no effect.

31	30	29	28	27	26	25	24	23	22	21	20	19	18	17	16
Reserved															
15	14	13	12	11	10	9	8	7	6	5	4	3	2	1	0
Reserved														OUTRIS	INRIS
														r	r

Bits 31:2 Reserved, must be kept at reset value

Bit 1 **OUTRIS:** Output FIFO service raw interrupt status

Gives the raw interrupt state prior to masking of the output FIFO service interrupt.

0: Raw interrupt not pending

1: Raw interrupt pending

Bit 0 **INRIS:** Input FIFO service raw interrupt status

Gives the raw interrupt state prior to masking of the Input FIFO service interrupt.

0: Raw interrupt not pending

1: Raw interrupt pending

23.6.9 CRYP masked interrupt status register (CRYP_MISR)

Address offset: 0x1C

Reset value: 0x0000 0000

The CRYP_MISR register is the masked interrupt status register. It is a read-only register. On a read, this register gives the current masked status of the corresponding interrupt prior to masking. A write has no effect.

31	30	29	28	27	26	25	24	23	22	21	20	19	18	17	16
Reserved															
15	14	13	12	11	10	9	8	7	6	5	4	3	2	1	0
Reserved														OUTMIS	INMIS
														r	r

Bits 31:2 Reserved, must be kept at reset value

Bit 1 **OUTMIS:** Output FIFO service masked interrupt status
Gives the interrupt state after masking of the output FIFO service interrupt.
0: Interrupt not pending
1: Interrupt pending

Bit 0 **INMIS:** Input FIFO service masked interrupt status
Gives the interrupt state after masking of the input FIFO service interrupt.
0: Interrupt not pending
1: Interrupt pending when CRYPEN = 1

23.6.10 CRYP key registers (CRYP_K0...3(L/R)R)

Address offset: 0x20 to 0x3C

Reset value: 0x0000 0000

These registers contain the cryptographic keys.

In the TDES mode, keys are 64-bit binary values (number from left to right, that is the leftmost bit is bit 1), named K1, K2 and K3 (K0 is not used), each key consists of 56 information bits and 8 parity bits. The parity bits are reserved for error detection purposes and are not used by the current block. Thus, bits 8, 16, 24, 32, 40, 48, 56 and 64 of each 64-bit key value Kx[1:64] are not used.

In the AES mode, the key is considered as a single 128-, 192- or 256-bit long bit sequence, $k_0k_1k_2...k_{127/191/255}$ (k_0 being the leftmost bit). The AES key is entered into the registers as follows:

- for AES-128: $k_0..k_{127}$ corresponds to $b_{127}..b_0$ ($b_{255}..b_{128}$ are not used),
- for AES-192: $k_0..k_{191}$ corresponds to $b_{191}..b_0$ ($b_{255}..b_{192}$ are not used),
- for AES-256: $k_0..k_{255}$ corresponds to $b_{255}..b_0$.

In any case b_0 is the rightmost bit.

CRYP_K0LR (address offset: 0x20)

31	30	29	28	27	26	25	24	23	22	21	20	19	18	17	16
b255	b254	b253	b252	b251	b250	b249	b248	b247	b246	b245	b244	b243	b242	b241	b240
w	w	w	w	w	w	w	w	w	w	w	w	w	w	w	w
15	14	13	12	11	10	9	8	7	6	5	4	3	2	1	0
b239	b238	b237	b236	b235	b234	b233	b232	b231	b230	b229	b228	b227	b226	b225	b224
w	w	w	w	w	w	w	w	w	w	w	w	w	w	w	w

CRYP_K0RR (address offset: 0x24)

31	30	29	28	27	26	25	24	23	22	21	20	19	18	17	16
b223	b222	b221	b220	b219	b218	b217	b216	b215	b214	b213	b212	b211	b210	b209	b208
w	w	w	w	w	w	w	w	w	w	w	w	w	w	w	w
15	14	13	12	11	10	9	8	7	6	5	4	3	2	1	0
b207	b206	b205	b204	b203	b202	b201	b200	b199	b198	b197	b196	b195	b194	b193	b192
w	w	w	w	w	w	w	w	w	w	w	w	w	w	w	w

CRYP_K1LR (address offset: 0x28)

31	30	29	28	27	26	25	24	23	22	21	20	19	18	17	16
k1.1 b191	k1.2 b190	k1.3 b189	k1.4 b188	k1.5 b187	k1.6 b186	k1.7 b185	k1.8 b184	k1.9 b183	k1.10 b182	k1.11 b181	k1.12 b180	k1.13 b179	k1.14 b178	k1.15 b177	k1.16 b176
w	w	w	w	w	w	w	w	w	w	w	w	w	w	w	w
15	14	13	12	11	10	9	8	7	6	5	4	3	2	1	0
k1.17 b175	k1.18 b174	k1.19 b173	k1.20 b172	k1.21 b171	k1.22 b170	k1.23 b169	k1.24 b168	k1.25 b167	k1.26 b166	k1.27 b165	k1.28 b164	k1.29 b163	k1.30 b162	k1.31 b161	k1.32 b160
w	w	w	w	w	w	w	w	w	w	w	w	w	w	w	w

CRYP_K1RR (address offset: 0x2C)

31	30	29	28	27	26	25	24	23	22	21	20	19	18	17	16
k1.33 b159	k1.34 b158	k1.35 b157	k1.36 b156	k1.37 b155	k1.38 b154	k1.39 b153	k1.40 b152	k1.41 b151	k1.42 b150	k1.43 b149	k1.44 b148	k1.45 b147	k1.46 b146	k1.47 b145	k1.48 b144
w	w	w	w	w	w	w	w	w	w	w	w	w	w	w	w
15	14	13	12	11	10	9	8	7	6	5	4	3	2	1	0
k1.49 b143	k1.50 b142	k1.51 b141	k1.52 b140	k1.53 b139	k1.54 b138	k1.55 b137	k1.56 b136	k1.57 b135	k1.58 b134	k1.59 b133	k1.60 b132	k1.61 b131	k1.62 b130	k1.63 b129	k1.64 b128
w	w	w	w	w	w	w	w	w	w	w	w	w	w	w	w

CRYP_K2LR (address offset: 0x30)

31	30	29	28	27	26	25	24	23	22	21	20	19	18	17	16
k2.1 b127	k2.2 b126	k2.3 b125	k2.4 b124	k2.5 b123	k2.6 b122	k2.7 b121	k2.8 b120	k2.9 b119	k2.10 b118	k2.11 b117	k2.12 b116	k2.13 b115	k2.14 b114	k2.15 b113	k2.16 b112
w	w	w	w	w	w	w	w	w	w	w	w	w	w	w	w
15	14	13	12	11	10	9	8	7	6	5	4	3	2	1	0
k2.17 b111	k2.18 b110	k2.19 b109	k2.20 b108	k2.21 b107	k2.22 b106	k2.23 b105	k2.24 b104	k2.25 b103	k2.26 b102	k2.27 b101	k2.28 b100	k2.29 b99	k2.30 b98	k2.31 b97	k2.32 b96
w	w	w	w	w	w	w	w	w	w	w	w	w	w	w	w

CRYP_K2RR (address offset: 0x34)

31	30	29	28	27	26	25	24	23	22	21	20	19	18	17	16
k2.33 b95	k2.34 b94	k2.35 b93	k2.36 b92	k2.37 b91	k2.38 b90	k2.39 b89	k2.40 b88	k2.41 b87	k2.42 b86	k2.43 b85	k2.44 b84	k2.45 b83	k2.46 b82	k2.47 b81	k2.48 b80
w	w	w	w	w	w	w	w	w	w	w	w	w	w	w	w
15	14	13	12	11	10	9	8	7	6	5	4	3	2	1	0
k2.49 b79	k2.50 b78	k2.51 b77	k2.52 b76	k2.53 b75	k2.54 b74	k2.55 b73	k2.56 b72	k2.57 b71	k2.58 b70	k2.59 b69	k2.60 b68	k2.61 b67	k2.62 b66	k2.63 b65	k2.64 b64
w	w	w	w	w	w	w	w	w	w	w	w	w	w	w	w

CRYP_K3LR (address offset: 0x38)

31	30	29	28	27	26	25	24	23	22	21	20	19	18	17	16
k3.1 b63	k3.2 b62	k3.3 b61	k3.4 b60	k3.5 b59	k3.6 b58	k3.7 b57	k3.8 b56	k3.9 b55	k3.10 b54	k3.11 b53	k3.12 b52	k3.13 b51	k3.14 b50	k3.15 b49	k3.16 b48
w	w	w	w	w	w	w	w	w	w	w	w	w	w	w	w
15	14	13	12	11	10	9	8	7	6	5	4	3	2	1	0
k3.17 b47	k3.18 b46	k3.19 b45	k3.20 b44	k3.21 b43	k3.22 b42	k3.23 b41	k3.24 b40	k3.25 b39	k3.26 b38	k3.27 b37	k3.28 b36	k3.29 b35	k3.30 b34	k3.31 b33	k3.32 b32
w	w	w	w	w	w	w	w	w	w	w	w	w	w	w	w

CRYP_K3RR (address offset: 0x3C)

31	30	29	28	27	26	25	24	23	22	21	20	19	18	17	16
k3.33 b31	k3.34 b30	k3.35 b29	k3.36 b28	k3.37 b27	k3.38 b26	k3.39 b25	k3.40 b24	k3.41 b23	k3.42 b22	k3.43 b21	k3.44 b20	k3.45 b19	k3.46 b18	k3.47 b17	k3.48 b16
w	w	w	w	w	w	w	w	w	w	w	w	w	w	w	w
15	14	13	12	11	10	9	8	7	6	5	4	3	2	1	0
k3.49 b15	k3.50 b14	k3.51 b13	k3.52 b12	k3.53 b11	k3.54 b10	k3.55 b9	k3.56 b8	k3.57 b7	k3.58 b6	k3.59 b5	k3.60 b4	k3.61 b3	k3.62 b2	k3.63 b1	k3.64 b0
w	w	w	w	w	w	w	w	w	w	w	w	w	w	w	w

Note: Write accesses to these registers are disregarded when the cryptographic processor is busy (bit BUSY = 1 in the CRYP_SR register).

23.6.11 CRYP initialization vector registers (CRYP_IV0...1(L/R)R)

Address offset: 0x40 to 0x4C

Reset value: 0x0000 0000

The CRYP_IV0...1(L/R)R are the left-word and right-word registers for the initialization vector (64 bits for DES/TDES and 128 bits for AES) and are used in the CBC (Cipher block chaining) and Counter (CTR) modes. After each computation round of the TDES or AES Core, the CRYP_IV0...1(L/R)R registers are updated as described in *Section : DES and TDES Cipher block chaining (DES/TDES-CBC) mode on page 726*, *Section : AES Cipher block chaining (AES-CBC) mode on page 730* and *Section : AES counter mode (AES-CTR) mode on page 732*.

IV0 is the leftmost bit whereas IV63 (DES, TDES) or IV127 (AES) are the rightmost bits of the initialization vector. IV1(L/R)R is used only in the AES.

CRYP_IV0LR (address offset: 0x40)

31	30	29	28	27	26	25	24	23	22	21	20	19	18	17	16
IV0	IV1	IV2	IV3	IV4	IV5	IV6	IV7	IV8	IV9	IV10	IV11	IV12	IV13	IV14	IV15
rw	rw	rw	rw	rw	rw	rw	rw	rw	rw	rw	rw	rw	rw	rw	rw
15	14	13	12	11	10	9	8	7	6	5	4	3	2	1	0
IV16	IV17	IV18	IV19	IV20	IV21	IV22	IV23	IV24	IV25	IV26	IV27	IV28	IV29	IV30	IV31
rw	rw	rw	rw	rw	rw	rw	rw	rw	rw	rw	rw	rw	rw	rw	rw

CRYP_IV0RR (address offset: 0x44)

31	30	29	28	27	26	25	24	23	22	21	20	19	18	17	16
IV32	IV33	IV34	IV35	IV36	IV37	IV38	IV39	IV40	IV41	IV42	IV43	IV44	IV45	IV46	IV47
rw	rw	rw	rw	rw	rw	rw	rw	rw	rw	rw	rw	rw	rw	rw	rw
15	14	13	12	11	10	9	8	7	6	5	4	3	2	1	0
IV48	IV49	IV50	IV51	IV52	IV53	IV54	IV55	IV56	IV57	IV58	IV59	IV60	IV61	IV62	IV63
rw	rw	rw	rw	rw	rw	rw	rw	rw	rw	rw	rw	rw	rw	rw	rw

CRYP_IV1LR (address offset: 0x48)

31	30	29	28	27	26	25	24	23	22	21	20	19	18	17	16
IV64	IV65	IV66	IV67	IV68	IV69	IV70	IV71	IV72	IV73	IV74	IV75	IV76	IV77	IV78	IV79
rw	rw	rw	rw	rw	rw	rw	rw	rw	rw	rw	rw	rw	rw	rw	rw
15	14	13	12	11	10	9	8	7	6	5	4	3	2	1	0
IV80	IV81	IV82	IV83	IV84	IV85	IV86	IV87	IV88	IV89	IV90	IV91	IV92	IV93	IV94	IV95
rw	rw	rw	rw	rw	rw	rw	rw	rw	rw	rw	rw	rw	rw	rw	rw

CRYP_IV1RR (address offset: 0x4C)

31	30	29	28	27	26	25	24	23	22	21	20	19	18	17	16
IV96	IV97	IV98	IV99	IV100	IV101	IV102	IV103	IV104	IV105	IV106	IV107	IV108	IV109	IV110	IV111
rw	rw	rw	rw	rw	rw	rw	rw	rw	rw	rw	rw	rw	rw	rw	rw
15	14	13	12	11	10	9	8	7	6	5	4	3	2	1	0
IV112	IV113	IV114	IV115	IV116	IV117	IV118	IV119	IV120	IV121	IV122	IV123	IV124	IV125	IV126	IV127
rw	rw	rw	rw	rw	rw	rw	rw	rw	rw	rw	rw	rw	rw	rw	rw

Note: In DES/3DES modes, only CRYP_IV0(L/R) is used.

Write access to these registers are disregarded when the cryptographic processor is busy (bit BUSY = 1 in the CRYP_SR register).

23.6.12 CRYP context swap registers (CRYP_CSGCMCCM0..7R and CRYP_CSGCM0..7R) for STM32F42xxx and STM32F43xxx

Address offset:

- CRYP_CSGCMCCM0..7: 0x050 to 0x06C: used for GCM/GMAC or CCM/CMAC alogrithm only
- CRYP_CSGCM0..7: 0x070 to 0x08C: used for GCM/GMAC algorithm only

Reset value: 0x0000 0000

These registers contain the complete internal register states of the CRYP processor when the GCM/GMAC or CCM/CMAC algorithm is selected. They are useful when a context swap has to be performed because a high-priority task needs the cryptographic processor while it is already in use by another task.

When such an event occurs, the CRYP_CSGCMCCM0..7R and CRYP_CSGCM0..7R (in GCM/GMAC mode) or CRYP_CSGCMCCM0..7R (in CCM/CMAC mode) registers have to be read and the values retrieved have to be saved in the system memory space. The cryptographic processor can then be used by the preemptive task, and when the cryptographic computation is complete, the saved context can be read from memory and written back into the corresponding context swap registers.

Note: These registers are used only when GCM/GMAC or CCM/CMAC algorithm mode is selected.

CRYP_CSGCMCCMxR: where x=[7:0]

31	30	29	28	27	26	25	24	23	22	21	20	19	18	17	16
CRYP_CSGCMCCMxR															
rw	rw	rw	rw	rw	rw	rw	rw	rw	rw	rw	rw	rw	rw	rw	rw
15	14	13	12	11	10	9	8	7	6	5	4	3	2	1	0
CRYP_CSGCMCCMxR															
rw	rw	rw	rw	rw	rw	rw	rw	rw	rw	rw	rw	rw	rw	rw	rw

CRYP_CSGCMxR: where x=[7:0]

31	30	29	28	27	26	25	24	23	22	21	20	19	18	17	16
CRYP_CSGCMxR															
rw	rw	rw	rw	rw	rw	rw	rw	rw	rw	rw	rw	rw	rw	rw	rw
15	14	13	12	11	10	9	8	7	6	5	4	3	2	1	0
CRYP_CSGCMxR															
rw	rw	rw	rw	rw	rw	rw	rw	rw	rw	rw	rw	rw	rw	rw	rw

23.6.13 CRYP register map

Table 114. CRYP register map and reset values for STM32F415/417xx

Offset	Register name and reset value	31	30	29	28	27	26	25	24	23	22	21	20	19	18	17	16	15	14	13	12	11	10	9	8	7	6	5	4	3	2	1	0
0x00 0x00	CRYP_CR	Reserved																CRYPEN	FFLUSH	Reserved				KEYSIZE		DATATYPE			ALOMODE[2:0]		ALGODIR	Res.	
	Reset value																	0	0					0	0	0	0	0	0	0	0		
0x04	CRYP_SR	Reserved																											BUSY	OFFU	OFNE	IFNF	IFEM
	Reset value																												0	0	0	1	1
0x08	CRYP_DIN	DATAIN																															
	Reset value																				0	0	0	0	0	0	0	0	0	0	0	0	0
0x0C	CRYP_DOUT	DATAOUT																															
	Reset value																				0	0	0	0	0	0	0	0	0	0	0	0	0
0x10	CRYP_DMACR	Reserved																														DOEN	DIEN
	Reset value																															0	0
0x14	CRYP_IMSCR	Reserved																														OUTIM	INIM
	Reset value																															0	0
0x18	CRYP_RISR	Reserved																														OUTRIS	INRIS
	Reset value																															0	1
0x1C	CRYP_MISR	Reserved																														OUTMIS	IN%IS
	Reset value																															0	0
0x20	CRYP_K0LR	CRYP_K0LR																															
	Reset value	0	0	0	0	0	0	0	0	0	0	0	0	0	0	0	0	0	0	0	0	0	0	0	0	0	0	0	0	0	0	0	0
0x24	CRYP_K0RR	CRYP_K0RR																															
	Reset value	0	0	0	0	0	0	0	0	0	0	0	0	0	0	0	0	0	0	0	0	0	0	0	0	0	0	0	0	0	0	0	0
...																																	
0x38	CRYP_K3LR	CRYP_K3LR																															
	Reset value	0	0	0	0	0	0	0	0	0	0	0	0	0	0	0	0	0	0	0	0	0	0	0	0	0	0	0	0	0	0	0	0
0x3C	CRYP_K3RR	CRYP_K3RR																															
	Reset value	0	0	0	0	0	0	0	0	0	0	0	0	0	0	0	0	0	0	0	0	0	0	0	0	0	0	0	0	0	0	0	0
0x40	CRYP_IV0LR	CRYP_IV0LR																															
	Reset value	0	0	0	0	0	0	0	0	0	0	0	0	0	0	0	0	0	0	0	0	0	0	0	0	0	0	0	0	0	0	0	0

Table 114. CRYP register map and reset values for STM32F415/417xx (continued)

Offset	Register name and reset value	31	30	29	28	27	26	25	24	23	22	21	20	19	18	17	16	15	14	13	12	11	10	9	8	7	6	5	4	3	2	1	0
0x44	CRYP_IV0RR	CRYP_IV0RR																															
	Reset value	0	0	0	0	0	0	0	0	0	0	0	0	0	0	0	0	0	0	0	0	0	0	0	0	0	0	0	0	0	0	0	0
0x48	CRYP_IV1LR	CRYP_IV1LR																															
	Reset value	0	0	0	0	0	0	0	0	0	0	0	0	0	0	0	0	0	0	0	0	0	0	0	0	0	0	0	0	0	0	0	0
0x4C	CRYP_IV1RR	CRYP_IV1RR																															
	Reset value	0	0	0	0	0	0	0	0	0	0	0	0	0	0	0	0	0	0	0	0	0	0	0	0	0	0	0	0	0	0	0	0

Table 115. CRYP register map and reset values for STM32F43xxx

Offset	Register name reset value	31	30	29	28	27	26	25	24	23	22	21	20	19	18	17	16	15	14	13	12	11	10	9	8	7	6	5	4	3	2	1	0
0x00 0x00	CRYP_CR	Reserved												ALGOMODE[3]	Res.	GCM_CCMPH		CRYPEN	FFLUSH	Reserved				KEYSIZE		DATATYPE		ALOMODE[2:0]			ALGODIR	Res..	
	Reset value															0	0	0	0					0	0	0	0	0	0	0	0		
0x04	CRYP_SR	Reserved																											BUSY	OFFU	OFNE	IFNF	IFEM
	Reset value																												0	0	0	1	1
0x08	CRYP_DIN	DATAIN																															
	Reset value																				0	0	0	0	0	0	0	0	0	0	0	0	0
0x0C	CRYP_DOUT	DATAOUT																															
	Reset value																				0	0	0	0	0	0	0	0	0	0	0	0	0
0x10	CRYP_DMACR	Reserved																														DOEN	DIEN
	Reset value																															0	0
0x14	CRYP_IMSCR	Reserved																														OUTIM	INIM
	Reset value																															0	0
0x18	CRYP_RISR	Reserved																														OUTRIS	INRIS
	Reset value																															0	1

Table 115. CRYP register map and reset values for STM32F43xxx (continued)

Offset	Register name reset value	31	30	29	28	27	26	25	24	23	22	21	20	19	18	17	16	15	14	13	12	11	10	9	8	7	6	5	4	3	2	1	0
0x1C	CRYP_MISR	Reserved																														OUTMIS	IN%IS
	Reset value																															0	0
0x20	CRYP_K0LR	CRYP_K0LR																															
	Reset value	0	0	0	0	0	0	0	0	0	0	0	0	0	0	0	0	0	0	0	0	0	0	0	0	0	0	0	0	0	0	0	0
0x24	CRYP_K0RR	CRYP_K0RR																															
	Reset value	0	0	0	0	0	0	0	0	0	0	0	0	0	0	0	0	0	0	0	0	0	0	0	0	0	0	0	0	0	0	0	0
...																																	
0x38	CRYP_K3LR	CRYP_K3LR																															
	Reset value	0	0	0	0	0	0	0	0	0	0	0	0	0	0	0	0	0	0	0	0	0	0	0	0	0	0	0	0	0	0	0	0
0x3C	CRYP_K3RR	CRYP_K3RR																															
	Reset value	0	0	0	0	0	0	0	0	0	0	0	0	0	0	0	0	0	0	0	0	0	0	0	0	0	0	0	0	0	0	0	0
0x40	CRYP_IV0LR	CRYP_IV0LR																															
	Reset value	0	0	0	0	0	0	0	0	0	0	0	0	0	0	0	0	0	0	0	0	0	0	0	0	0	0	0	0	0	0	0	0
0x44	CRYP_IV0RR	CRYP_IV0RR																															
	Reset value	0	0	0	0	0	0	0	0	0	0	0	0	0	0	0	0	0	0	0	0	0	0	0	0	0	0	0	0	0	0	0	0
0x48	CRYP_IV1LR	CRYP_IV1LR																															
	Reset value	0	0	0	0	0	0	0	0	0	0	0	0	0	0	0	0	0	0	0	0	0	0	0	0	0	0	0	0	0	0	0	0
0x4C	CRYP_IV1RR	CRYP_IV1RR																															
	Reset value	0	0	0	0	0	0	0	0	0	0	0	0	0	0	0	0	0	0	0	0	0	0	0	0	0	0	0	0	0	0	0	0
0x50	CRYP_CSGCMCCMR	CRYP_CSGCMCCM0R																															
	Reset value	0	0	0	0	0	0	0	0	0	0	0	0	0	0	0	0	0	0	0	0	0	0	0	0	0	0	0	0	0	0	0	0
0x54	CRYP_CSGCMCCM1R	CRYP_CSGCMCCM1R																															
	Reset value	0	0	0	0	0	0	0	0	0	0	0	0	0	0	0	0	0	0	0	0	0	0	0	0	0	0	0	0	0	0	0	0
0x58	CRYP_CSGCMCCM2R	CRYP_CSGCMCCM2R																															
	Reset value	0	0	0	0	0	0	0	0	0	0	0	0	0	0	0	0	0	0	0	0	0	0	0	0	0	0	0	0	0	0	0	0
0x5C	CRYP_CSGCMCCM3R	CRYP_CSGCMCCM3R																															
	Reset value	0	0	0	0	0	0	0	0	0	0	0	0	0	0	0	0	0	0	0	0	0	0	0	0	0	0	0	0	0	0	0	0

Table 115. CRYP register map and reset values for STM32F43xxx (continued)

Offset	Register name reset value	31	30	29	28	27	26	25	24	23	22	21	20	19	18	17	16	15	14	13	12	11	10	9	8	7	6	5	4	3	2	1	0
0x60	CRYP_CSGCMCCM4R	CRYP_CSGCMCCM4R																															
	Reset value	0	0	0	0	0	0	0	0	0	0	0	0	0	0	0	0	0	0	0	0	0	0	0	0	0	0	0	0	0	0	0	0
0x64	CRYP_CSGCMCCM5R	CRYP_CSGCMCCM5R																															
	Reset value	0	0	0	0	0	0	0	0	0	0	0	0	0	0	0	0	0	0	0	0	0	0	0	0	0	0	0	0	0	0	0	0
0x68	CRYP_CSGCMCCM6R	CRYP_CSGCMCCM6R																															
	Reset value	0	0	0	0	0	0	0	0	0	0	0	0	0	0	0	0	0	0	0	0	0	0	0	0	0	0	0	0	0	0	0	0
0x6C	CRYP_CSGCMCCM7R	CRYP_CSGCMCCM7R																															
	Reset value	0	0	0	0	0	0	0	0	0	0	0	0	0	0	0	0	0	0	0	0	0	0	0	0	0	0	0	0	0	0	0	0
0x70	CRYP_CSGCM0R	CRYP_CSGCM0R																															
	Reset value	0	0	0	0	0	0	0	0	0	0	0	0	0	0	0	0	0	0	0	0	0	0	0	0	0	0	0	0	0	0	0	0
0x74	CRYP_CSGCM1R	CRYP_CSGCM1R																															
	Reset value	0	0	0	0	0	0	0	0	0	0	0	0	0	0	0	0	0	0	0	0	0	0	0	0	0	0	0	0	0	0	0	0
0x78	CRYP_CSGCM2R	CRYP_CSGCM2R																															
	Reset value	0	0	0	0	0	0	0	0	0	0	0	0	0	0	0	0	0	0	0	0	0	0	0	0	0	0	0	0	0	0	0	0
0x7C	CRYP_CSGCM3R	CRYP_CSGCM3R																															
	Reset value	0	0	0	0	0	0	0	0	0	0	0	0	0	0	0	0	0	0	0	0	0	0	0	0	0	0	0	0	0	0	0	0
0x80	CRYP_CSGCM4R	CRYP_CSGCM4R																															
	Reset value	0	0	0	0	0	0	0	0	0	0	0	0	0	0	0	0	0	0	0	0	0	0	0	0	0	0	0	0	0	0	0	0
0x84	CRYP_CSGCM5R	CRYP_CSGCM5R																															
	Reset value	0	0	0	0	0	0	0	0	0	0	0	0	0	0	0	0	0	0	0	0	0	0	0	0	0	0	0	0	0	0	0	0
0x88	CRYP_CSGCM6R	CRYP_CSGCM6R																															
	Reset value	0	0	0	0	0	0	0	0	0	0	0	0	0	0	0	0	0	0	0	0	0	0	0	0	0	0	0	0	0	0	0	0
0x8C	CRYP_CSGCM7R	CRYP_CSGCM7R																															
	Reset value	0	0	0	0	0	0	0	0	0	0	0	0	0	0	0	0	0	0	0	0	0	0	0	0	0	0	0	0	0	0	0	0

Refer to *Section 2.3: Memory map* for the register boundary addresses.

24 Random number generator (RNG)

This section applies to the whole STM32F4xx family, unless otherwise specified.

24.1 RNG introduction

The RNG processor is a random number generator, based on a continuous analog noise, that provides a random 32-bit value to the host when read.

The RNG passed the FIPS PUB 140-2 (2001 October 10) tests with a success ratio of 99%.

24.2 RNG main features

- It delivers 32-bit random numbers, produced by an analog generator
- 40 periods of the RNG_CLK clock signal between two consecutive random numbers
- Monitoring of the RNG entropy to flag abnormal behavior (generation of stable values, or of a stable sequence of values)
- It can be disabled to reduce power consumption

24.3 RNG functional description

Figure 232 shows the RNG block diagram.

Figure 232. Block diagram

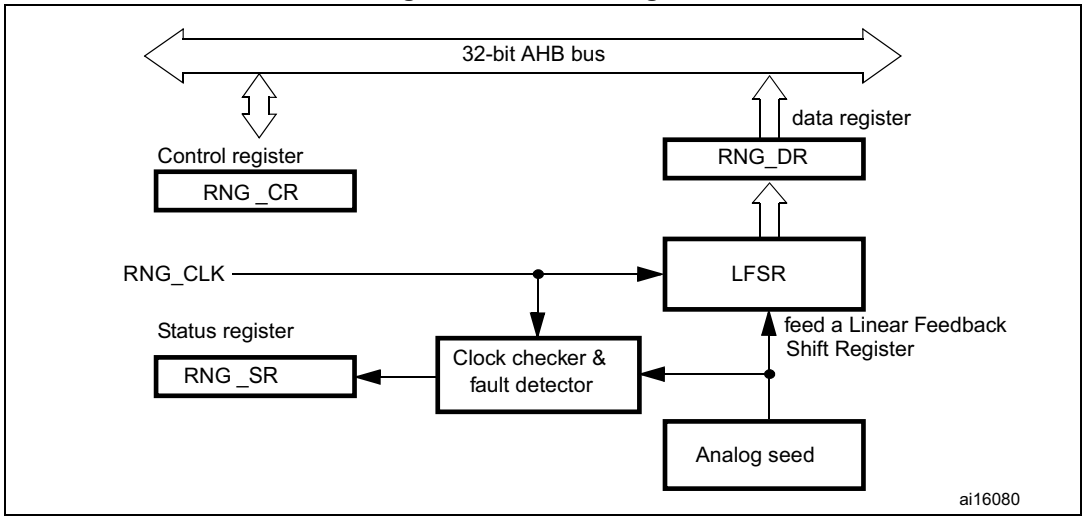

1. For more details about RNG Clock (RNG_CLK) source, please refer to *Section 6: Reset and clock control for STM32F42xxx and STM32F43xxx (RCC)* and *Section 7: Reset and clock control for STM32F405xx/07xx and STM32F415xx/17xx(RCC)*.

The random number generator implements an analog circuit. This circuit generates seeds that feed a linear feedback shift register (RNG_LFSR) in order to produce 32-bit random numbers.

The analog circuit is made of several ring oscillators whose outputs are XORed to generate the seeds. The RNG_LFSR is clocked by a dedicated clock (RNG_CLK) at a constant frequency, so that the quality of the random number is independent of the HCLK frequency. The contents of the RNG_LFSR are transferred into the data register (RNG_DR) when a significant number of seeds have been introduced into the RNG_LFSR.

In parallel, the analog seed and the dedicated RNG_CLK clock are monitored. Status bits (in the RNG_SR register) indicate when an abnormal sequence occurs on the seed or when the frequency of the RNG_CLK clock is too low. An interrupt can be generated when an error is detected.

24.3.1 Operation

To run the RNG, follow the steps below:

1. Enable the interrupt if needed (to do so, set the IE bit in the RNG_CR register). An interrupt is generated when a random number is ready or when an error occurs.
2. Enable the random number generation by setting the RNGEN bit in the RNG_CR register. This activates the analog part, the RNG_LFSR and the error detector.
3. At each interrupt, check that no error occurred (the SEIS and CEIS bits should be ‘0’ in the RNG_SR register) and that a random number is ready (the DRDY bit is ‘1’ in the RNG_SR register). The contents of the RNG_DR register can then be read.

As required by the FIPS PUB (Federal Information Processing Standard Publication) 140-2, the first random number generated after setting the RNGEN bit should not be used, but saved for comparison with the next generated random number. Each subsequent generated random number has to be compared with the previously generated number. The test fails if any two compared numbers are equal (continuous random number generator test).

24.3.2 Error management

If the CEIS bit is read as ‘1’ (clock error)

In the case of a clock, the RNG is no more able to generate random numbers because the RNG_CLK clock is not correct. Check that the clock controller is correctly configured to provide the RNG clock and clear the CEIS bit. The RNG can work when the CECS bit is ‘0’. The clock error has no impact on the previously generated random numbers, and the RNG_DR register contents can be used.

If the SEIS bit is read as ‘1’ (seed error)

In the case of a seed error, the generation of random numbers is interrupted for as long as the SECS bit is ‘1’. If a number is available in the RNG_DR register, it must not be used because it may not have enough entropy.

What you should do is clear the SEIS bit, then clear and set the RNGEN bit to reinitialize and restart the RNG.

24.4 RNG registers

The RNG is associated with a control register, a data register and a status register. They have to be accessed by words (32 bits).

24.4.1 RNG control register (RNG_CR)

Address offset: 0x00

Reset value: 0x0000 0000

31	30	29	28	27	26	25	24	23	22	21	20	19	18	17	16
Reserved															
15	14	13	12	11	10	9	8	7	6	5	4	3	2	1	0
Reserved												IE	RNGEN	Reserved	
												rw	rw		

Bits 31:4 Reserved, must be kept at reset value

Bit 3 **IE:** Interrupt enable

0: RNG Interrupt is disabled
1: RNG Interrupt is enabled. An interrupt is pending as soon as DRDY=1 or SEIS=1 or CEIS=1 in the RNG_SR register.

Bit 2 **RNGEN:** Random number generator enable

0: Random number generator is disabled
1: random Number Generator is enabled.

Bits 1:0 Reserved, must be kept at reset value

24.4.2 RNG status register (RNG_SR)

Address offset: 0x04

Reset value: 0x0000 0000

31	30	29	28	27	26	25	24	23	22	21	20	19	18	17	16
Reserved															
15	14	13	12	11	10	9	8	7	6	5	4	3	2	1	0
Reserved									SEIS	CEIS	Reserved		SECS	CECS	DRDY
									rc_w0	rc_w0			r	r	r

Bits 31:3 Reserved, must be kept at reset value

Bit 6 **SEIS:** Seed error interrupt status

This bit is set at the same time as SECS, it is cleared by writing it to 0.

0: No faulty sequence detected
1: One of the following faulty sequences has been detected:
- More than 64 consecutive bits at the same value (0 or 1)
- More than 32 consecutive alternances of 0 and 1 (0101010101...01)

An interrupt is pending if IE = 1 in the RNG_CR register.

Bit 5 **CEIS:** Clock error interrupt status

This bit is set at the same time as CECS, it is cleared by writing it to 0.

0: The RNG_CLK clock was correctly detected
1: The RNG_CLK was not correctly detected ($f_{RNG_CLK} < f_{HCLK}/16$)
An interrupt is pending if IE = 1 in the RNG_CR register.

Bits 4:3 Reserved, must be kept at reset value

Bit 2 **SECS:** Seed error current status

0: No faulty sequence has currently been detected. If the SEIS bit is set, this means that a faulty sequence was detected and the situation has been recovered.

1: One of the following faulty sequences has been detected:

- More than 64 consecutive bits at the same value (0 or 1)
- More than 32 consecutive alternances of 0 and 1 (0101010101...01)

Bit 1 **CECS:** Clock error current status

0: The RNG_CLK clock has been correctly detected. If the CEIS bit is set, this means that a clock error was detected and the situation has been recovered

1: The RNG_CLK was not correctly detected ($f_{RNG_CLK} < f_{HCLK}/16$).

Bit 0 **DRDY:** Data ready

0: The RNG_DR register is not yet valid, no random data is available

1: The RNG_DR register contains valid random data

Note: An interrupt is pending if IE = 1 in the RNG_CR register.

Once the RNG_DR register has been read, this bit returns to 0 until a new valid value is computed.

24.4.3 RNG data register (RNG_DR)

Address offset: 0x08

Reset value: 0x0000 0000

The RNG_DR register is a read-only register that delivers a 32-bit random value when read. After being read, this register delivers a new random value after a maximum time of 40 periods of the RNG_CLK clock. The software must check that the DRDY bit is set before reading the RNDATA value.

31	30	29	28	27	26	25	24	23	22	21	20	19	18	17	16
RNDATA															
r	r	r	r	r	r	r	r	r	r	r	r	r	r	r	r
15	14	13	12	11	10	9	8	7	6	5	4	3	2	1	0
RNDATA															
r	r	r	r	r	r	r	r	r	r	r	r	r	r	r	r

Bits 31:0 **RNDATA:** Random data

32-bit random data.

24.4.4 RNG register map

Table 116 gives the RNG register map and reset values.

Table 116. RNG register map and reset map

Offset	Register name reset value	Register size																															
		31	30	29	28	27	26	25	24	23	22	21	20	19	18	17	16	15	14	13	12	11	10	9	8	7	6	5	4	3	2	1	0
0x00	RNG_CR 0x0000000	Reserved																												IE	RNGEN	Reserved	
0x04	RNG_SR 0x0000000	Reserved																									SEIS	CEIS	Reserved		SECS	CECS	DRDY
0x08	RNG_DR 0x0000000	RNDATA[31:0]																															

25 Hash processor (HASH)

This section applies to STM32F415/417xx and STM32F43xxx devices.

25.1 HASH introduction

The hash processor is a fully compliant implementation of the secure hash algorithm (SHA-1, SHA-224, SHA-256), the MD5 (message-digest algorithm 5) hash algorithm and the HMAC (keyed-hash message authentication code) algorithm suitable for a variety of applications. It computes a message digest (160 bits for the SHA-1 algorithm, 256 bits for the SHA-256 algorithm and 224 bits for the SHA-224 algorithm,128 bits for the MD5 algorithm) for messages of up to (2^{64} – 1) bits, while HMAC algorithms provide a way of authenticating messages by means of hash functions. HMAC algorithms consist in calling the SHA-1, SHA-224, SHA-256 or MD5 hash function twice.

25.2 HASH main features

- Suitable for data authentication applications, compliant with:
  - FIPS PUB 180-2 (Federal Information Processing Standards Publication 180-2)
  - Secure Hash Standard specifications (SHA-1, SHA-224 and SHA-256)
  - IETF RFC 1321 (Internet Engineering Task Force Request For Comments number 1321) specifications (MD5)
- Fast computation of SHA-1, SHA-224 and SHA-256, and MD5 (SHA-224 and SHA-256 are available on STM32F43xxx only)
- AHB slave peripheral
- 32-bit data words for input data, supporting word, half-word, byte and bit bit-string representations, with little-endian data representation only.
- Automatic swapping to comply with the big-endian SHA1, SHA-224 and SHA-256 computation standard with little-endian input bit-string representation
- Automatic padding to complete the input bit string to fit modulo 512 (16 × 32 bits) message digest computing
- 5× 32-bit words (H0 to H5) on STM32F415/417xx and 8 × 32-bit words (H0 to H7) on STM32F43xxx for output message digest, reload able to continue interrupted message digest computation.
- Corresponding 32-bit words of the digest from consecutive message blocks are added to each other to form the digest of the whole message
- Automatic data flow control with support for direct memory access (DMA)

Note: *Padding, as defined in the SHA-1*, SHA-224 and SHA-256 *algorithm, consists in adding a bit at bx1 followed by N bits at bx0 to get a total length congruent to 448 modulo 512. After this, the message is completed with a 64-bit integer which is the binary representation of the original message length.*
For this hash processor, the quanta for entering the message is a 32-bit word, so an additional information must be provided at the end of the message entry, which is the number of valid bits in the last 32-bit word entered.

25.3 HASH functional description

Figure 1 shows the block diagram of the hash processor.

Figure 233. Block diagram for STM32F415/417xx

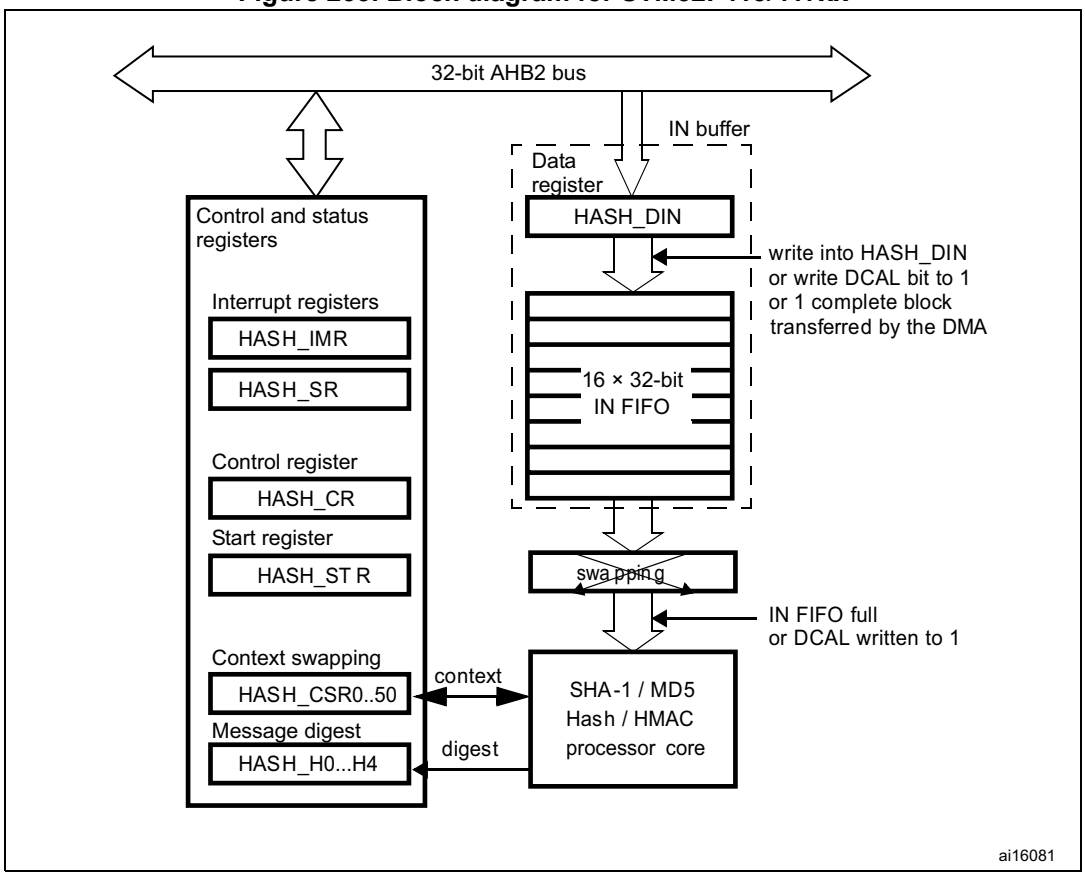

Figure 234. Block diagram for STM32F43xxx

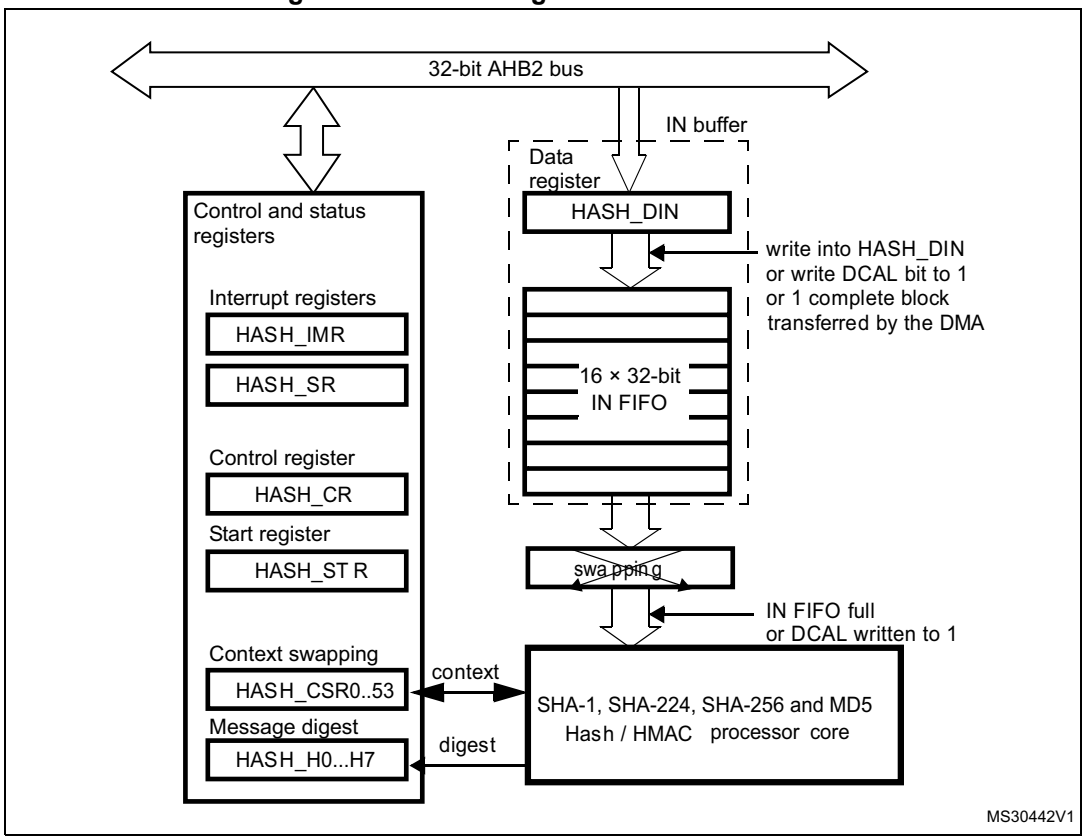

The FIPS PUB 180-2 standard and the IETF RFC 1321 publication specify the SHA-1, SHA-224 and SHA-256 and MD5 secure hash algorithms, respectively, for computing a condensed representation of a message or data file. When a message of any length below 2^{64} bits is provided on input, the SHA-1, SHA-224 and SHA-256 and MD5 produce respective a 160-bit, 224 bit, 256 bit and 128-bit output string, respectively, called a message digest. The message digest can then be processed with a digital signature algorithm in order to generate or verify the signature for the message. Signing the message digest rather than the message often improves the efficiency of the process because the message digest is usually much smaller in size than the message. The verifier of a digital signature has to use the same hash algorithm as the one used by the creator of the digital signature.

The SHA-1, SHA-224 and SHA-256 and MD5 are qualified as “secure” because it is computationally infeasible to find a message that corresponds to a given message digest, or to find two different messages that produce the same message digest. Any change to a message in transit will, with very high probability, result in a different message digest, and the signature will fail to verify. For more detail on the SHA-1 or SHA-224 and SHA-256 algorithm, please refer to the FIPS PUB 180-2 (Federal Information Processing Standards Publication 180-2), 2002 august 1.

The current implementation of this standard works with little-endian input data convention. For example, the C string “abc” must be represented in memory as the 24-bit hexadecimal value 0x434241.

A message or data file to be processed by the hash processor should be considered a bit string. The length of the message is the number of bits in the message (the empty message

has length 0). You can consider that 32 bits of this bit string forms a 32-bit word. Note that the FIPS PUB 180-1 standard uses the convention that bit strings grow from left to right, and bits can be grouped as bytes (8 bits) or words (32 bits) (but some implementations also use half-words (16 bits), and implicitly, uses the big-endian byte (half-word) ordering. This convention is mainly important for padding (see *Section 1.3.4: Message padding on page 12*).

25.3.1 Duration of the processing

The computation of an intermediate block of a message takes:

- 66 HCLK clock cycles in SHA-1
- 50 HCLK clock cycles in SHA-224
- 50 HCLK clock cycles in SHA-256
- 50 HCLK clock cycles in MD5

to which you must add the time needed to load the 16 words of the block into the processor (at least 16 clock cycles for a 512-bit block).

The time needed to process the last block of a message (or of a key in HMAC) can be longer. This time depends on the length of the last block and the size of the key (in HMAC mode). Compared to the processing of an intermediate block, it can be increased by a factor of:

- 1 to 2.5 for a hash message
- around 2.5 for an HMAC input-key
- 1 to 2.5 for an HMAC message
- around 2.5 for an HMAC output key in case of a short key
- 3.5 to 5 for an HMAC output key in case of a long key

25.3.2 Data type

Data are entered into the hash processor 32 bits (word) at a time, by writing them into the HASH_DIN register. But the original bit-string can be organized in bytes, half-words or words, or even be represented as bits. As the system memory organization is little-endian and SHA1, SHA-224 and SHA-256 computation is big-endian, depending on the way the original bit string is grouped, a bit, byte, or half-word swapping operation is performed automatically by the hash processor.

The kind of data to be processed is configured with the DATATYPE bitfield in the HASH control register (HASH_CR).

Figure 235. Bit, byte and half-word swapping

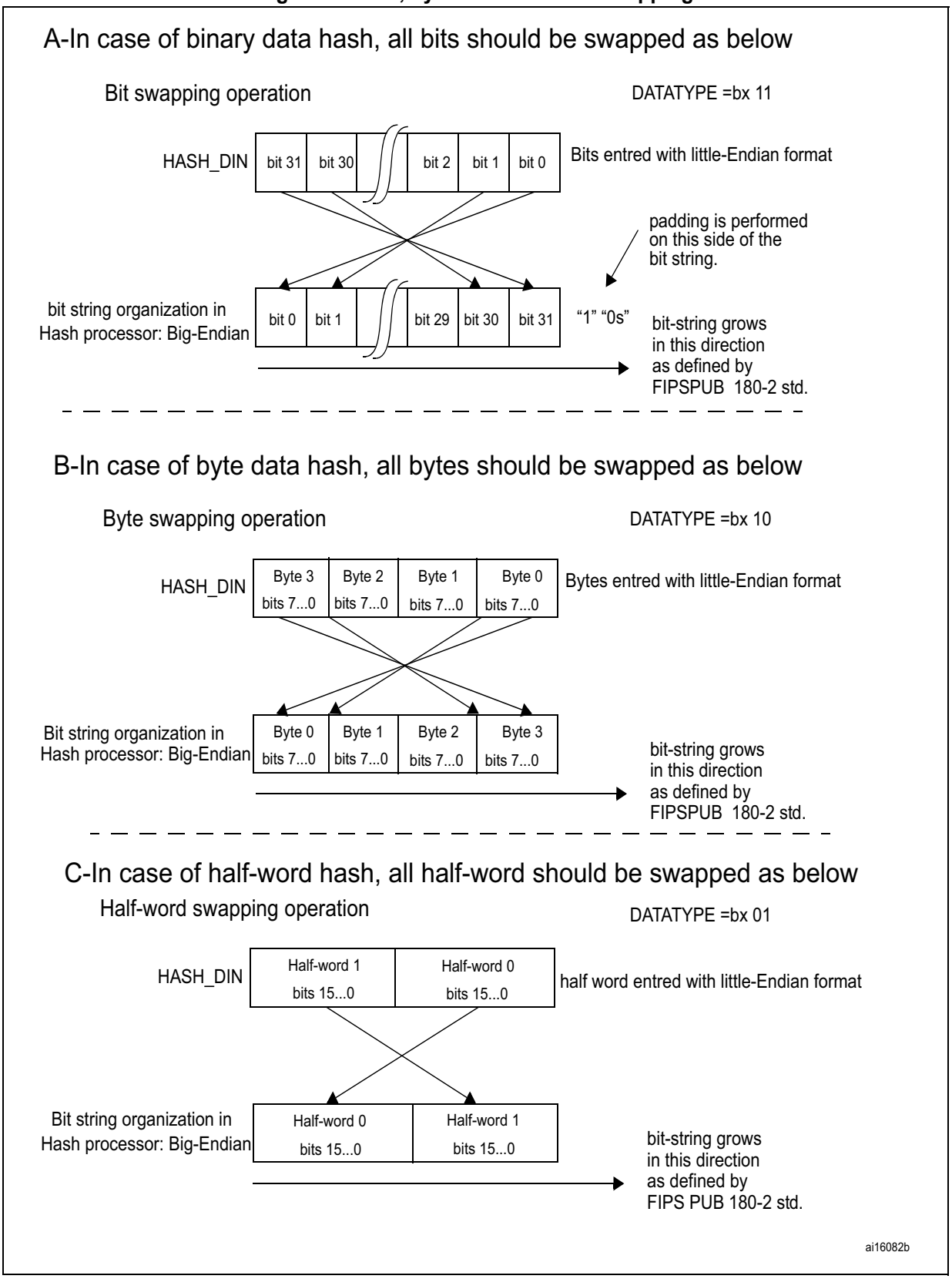

The least significant bit of the message has to be at position 0 (right) in the first word entered into the hash processor, the 32nd bit of the bit string has to be at position 0 in the second word entered into the hash processor and so on.

25.3.3 Message digest computing

The HASH sequentially processes blocks of 512 bits when computing the message digest. Thus, each time 16 × 32-bit words (= 512 bits) have been written by the DMA or the CPU, into the hash processor, the HASH automatically starts computing the message digest. This operation is known as a partial digest computation.

The message to be processed is entered into the peripheral by 32-bit words written into the HASH_DIN register. The current contents of the HASH_DIN register are transferred to the input FIFO (IN FIFO) each time the register is written with new data. HASH_DIN and the input FIFO form a FIFO of a 17-word length (named the IN buffer).

The processing of a block can start only once the last value of the block has entered the IN FIFO. The peripheral must get the information as to whether the HASH_DIN register contains the last bits of the message or not. Two cases may occur:

- When the DMA is not used:
  - In case of a partial digest computation, this is done by writing an additional word into the HASH_DIN register (actually the first word of the next block). Then the software must wait until the processor is ready again (when DINIS=1) before writing new data into HASH_DIN.
  - In case of a final digest computation (last block entered), this is done by writing the DCAL bit to 1.
- When the DMA is used:

  The contents of the HASH_DIN register are interpreted automatically with the information sent by the DMA controller.
  - In case of a single DMA transfer: Multiple DMA transfer (MDMAT) bit should be cleared on STM32F43xxx. When the last block has been transferred to the HASH_DIN register via DMA channel, DCAL bit will be set to automatically to 1 in the HASH_STR register in order to launch the final digest calculation.
  - In case of a multiple DMA transfer (available only on STM32F43xxx): Multiple DMA transfer (MDMAT) bit should be set to 1 by software so DCAL bit does not get set automatically by HW, in this case the final digest calculation for hash and for each phases for HMAC (for more details about HMAC phases please refer to HMAC operation section) will not be launched a the end of the DMA transfer request, allowing the processor to receive a new DMA transfer. During the last DMA transfer, Multiple DMA transfer (MDMAT) bit should be cleared by software in order to set automatically DCAL bit at the end of the last bloc and lunch the final digest.
  - The contents of the HASH_DIN register are interpreted automatically with the information sent by the DMA controller.

This process —data entering + partial digest computation— continues until the last bits of the original message are written to the HASH_DIN register. As the length (number of bits) of a message can be any integer value, the last word written into the HASH processor may have a valid number of bits between 1 and 32. This number of valid bits in the last word, NBLW, has to be written into the HASH_STR register, so that message padding is correctly performed before the final message digest computation.

Once this is done, writing into HASH_STR with bit DCAL = 1 starts the processing of the last entered block of message by the hash processor. This processing consists in:

- Automatically performing the message padding operation: the purpose of this operation is to make the total length of a padded message a multiple of 512. The HASH sequentially processes blocks of 512 bits when computing the message digest
- Computing the final message digest

When the DMA is enabled, it provides the information to the hash processor when it is transferring the last data word. Then the padding and digest computation are performed automatically as if DCAL had been written to 1.

25.3.4 Message padding

Message padding consists in appending a “1” followed by m “0”s followed by a 64-bit integer to the end of the original message to produce a padded message block of length 512. The “1” is added to the last word written into the HASH_DIN register at the bit position defined by the NBLW bitfield, and the remaining upper bits are cleared (“0”s).

Example: let us assume that the original message is the ASCII binary-coded form of “abc”, of length L = 24:

```
byte 0    byte 1   byte 2   byte 3
01100001 01100010 01100011 UUUUUUUU
<-- 1st word written to HASH_DIN -->
```

NBLW has to be loaded with the value 24: a “1” is appended at bit location 24 in the bit string (starting counting from left to right in the above bit string), which corresponds to bit 31 in the HASH_DIN register (little-endian convention):

```
01100001 01100010 01100011 1UUUUUUU
```

Since L = 24, the number of bits in the above bit string is 25, and 423 “0”s are appended, making now 448. This gives (in hexadecimal, big-endian format):

```
61626380 00000000 00000000 00000000
00000000 00000000 00000000 00000000
00000000 00000000 00000000 00000000
00000000 00000000
```

The L value, in two-word representation (that is 00000000 00000018) is appended. Hence the final padded message in hexadecimal:

```
61626380 00000000 00000000 00000000
00000000 00000000 00000000 00000000
00000000 00000000 00000000 00000000
00000000 00000000 00000000 00000028
```

If the HASH is programmed to use the little-endian byte input format, the above message has to be entered by doing the following steps:

1. 0xUU636261 is written into the HASH_DIN register (where ‘U’ means don’t care)
2. 0x18 is written into the HASH_STR register (the number of valid bits in the last word written into the HASH_DIN register is 24, as the original message length is 24 bits)
3. 0x10 is written into the HASH_STR register to start the message padding and digest computation. When NBLW $\neq$ 0x00, the message padding puts a “1” into the HASH_DIN register at the bit position defined by the NBLW value, and inserts “0”s at bit locations [31:(NBLW+1)]. When NBLW == 0x00, the message padding inserts one new word with

value 0x0000 0001. Then an all zero word (0x0000 0000) is added and the message length in a two-word representation, to get a block of 16 x 32-bit words.

4. The HASH computing is performed, and the message digest is then available in the HASH_Hx registers (x = 0...4) for the SHA-1 algorithm. For example:

```
H0 = 0xA9993E36
H1 = 0x4706816A
H2 = 0xBA3E2571
H3 = 0x7850C26C
H4 = 0x9CD0D89D
```

25.3.5 Hash operation

The hash function (SHA-1, SHA-224, SHA-256 and MD5) is selected when the INIT bit is written to '1' in the HASH_CR register while the MODE bit is at '0' in HASH_CR. The algorithm (SHA-1, SHA-224,SHA-256 or MD5) is selected at the same time (that is when the INIT bit is set) using the ALGO bits.

The message can then be sent by writing it word by word into the HASH_DIN register. When a block of 512 bits —that is 16 words— has been written, a partial digest computation starts upon writing the first data of the next block. The hash processor remains busy for 66 cycles for the SHA-1 algorithm, or 50 cycles for the MD5 algorithm, SHA-224 algorithm and SHA-256 algorithm.

The process can then be repeated until the last word of the message. If DMA transfers are used, refer to the *Procedure where the data are loaded by DMA* section. Otherwise, if the message length is not an exact multiple of 512 bits, then the HASH_STR register has to be written to launch the computation of the final digest.

Once computed, the digest can be read from the HASH_H0...HASH_H4 registers (for the MD5 algorithm, HASH_H4 is not relevant) on STM32F415/417xx, and from the HASH_H0...HASH_H7 registers on STM32F43xxx where:

HASH_H4..HASH_H7 are not relevant when the MD5 algorithm is selected,

HASH_H5.. HASH_H7 are not relevant when the SHA-1algorithm is selected,

HASH_H7 is not relevant when the SHA-224 algorithm is selected.

25.3.6 HMAC operation

The HMAC algorithm is used for message authentication, by irreversibly binding the message being processed to a key chosen by the user. For HMAC specifications, refer to "HMAC: keyed-hashing for message authentication, H. Krawczyk, M. Bellare, R. Canetti, February 1997.

Basically, the algorithm consists of two nested hash operations:

```
HMAC(message) = Hash[((key | pad) XOR 0x5C)
                | Hash(((key | pad) XOR 0x36) | message)]
```

where:

- `pad` is a sequence of zeroes needed to extend the key to the length of the underlying hash function data block (that is 512 bits for both the SHA-1, SHA224, SHA-256 and MD5 hash algorithms)
- | represents the concatenation operator

To compute the HMAC, four different phases are required:

1. The block is initialized by writing the INIT bit to ‘1’ with the MODE bit at ‘1’ and the ALGO bits set to the value corresponding to the desired algorithm. The LKEY bit must also be set during this phase if the key being used is longer than 64 bytes (in this case, the HMAC specifications specify that the hash of the key should be used in place of the real key).
2. The key (to be used for the inner hash function) is then given to the core. This operation follows the same mechanism as the one used to send the message in the hash operation (that is, by writing into HASH_DIN and, finally, into HASH_STR).
3. Once the last word has been entered and computation has started, the hash processor elaborates the key. It is then ready to accept the message text using the same mechanism as the one used to send the message in the hash operation.
4. After the first hash round, the hash processor returns “ready” to indicate that it is ready to receive the key to be used for the outer hash function (normally, this key is the same as the one used for the inner hash function). When the last word of the key is entered and computation starts, the HMAC result is made available in the HASH_H0...HASH_H4 registers on STM32F415/417xx and on HASH_H0...HASH_H7 registers on STM32F43xxx.

Note: 1 The computation latency of the HMAC primitive depends on the lengths of the keys and message. You could the HMAC as two nested underlying hash functions with the same key length (long or short).

25.3.7 Context swapping

It is possible to interrupt a hash/HMAC process to perform another processing with a higher priority, and to complete the interrupted process later on, when the higher-priority task is complete. To do so, the context of the interrupted task must be saved from the hash registers to memory, and then be restored from memory to the hash registers.

The procedures where the data flow is controlled by software or by DMA are described below.

Procedure where the data are loaded by software

The context can be saved only when no block is currently being processed. That is, you must wait for DINIS = 1 (the last block has been processed and the input FIFO is empty) or NBW ≠ 0 (the FIFO is not full and no processing is ongoing).

- Context saving:

  Store the contents of the following registers into memory:
  - HASH_IMR
  - HASH_STR
  - HASH_CR
  - HASH_CSR0 to HASH_CSR50 on STM32F415/417xx, and HASH_CSR0 to HASH_CSR53 on STM32F43xxx.
- Context restoring:

  The context can be restored when the high-priority task is complete. Please follow the order of the sequence below.

  a) Write the following registers with the values saved in memory: HASH_IMR, HASH_STR and HASH_CR

  b) Initialize the hash processor by setting the INIT bit in the HASH_CR register

  c) Write the HASH_CSR0 to HASH_CSR50 (STM32F415/417xx), and HASH_CSR0 to HASH_CSR53 (STM32F43xxx) registers with the values saved in memory

  You can now restart the processing from the point where it has been interrupted.

Procedure where the data are loaded by DMA

In this case it is not possible to predict if a DMA transfer is in progress or if the process is ongoing. Thus, you must stop the DMA transfers, then wait until the HASH is ready in order to interrupt the processing of a message.

- Interrupting a processing:
  - Clear the DMAE bit to disable the DMA interface
  - Wait until the current DMA transfer is complete (wait for DMAES = 0 in the HASH_SR register). Note that the block may or not have been totally transferred to the HASH.
  - Disable the corresponding channel in the DMA controller
  - Wait until the hash processor is ready (no block is being processed), that is wait for DINIS = 1
- The context saving and context restoring phases are the same as above (see *Procedure where the data are loaded by software*).

Reconfigure the DMA controller so that it transfers the end of the message. You can now restart the processing from the point where it was interrupted by setting the DMAE bit.

Note: *If context swapping does not involve HMAC operations, the HASH_CSR38 to HASH_CSR50 (*STM32F415/417xx*) and HASH_CSR38 to HASH_CSR53 (*STM32F43xxx*) registers do not have to be saved and restored.*

If context swapping occurs between two blocks (the last block was completely processed and the next block has not yet been pushed into the IN FIFO, NBW = 000 in the HASH_CR register), the HASH_CSR22 to HASH_CSR37 registers do not have to be saved and restored.

25.3.8 HASH interrupt

There are two individual maskable interrupt sources generated by the HASH processor. They are connected to the same interrupt vector.

You can enable or disable the interrupt sources individually by changing the mask bits in the HASH_IMR register. Setting the appropriate mask bit to 1 enables the interrupt.

The status of the individual interrupt sources can be read from the HASH_SR register.

Figure 236. HASH interrupt mapping diagram

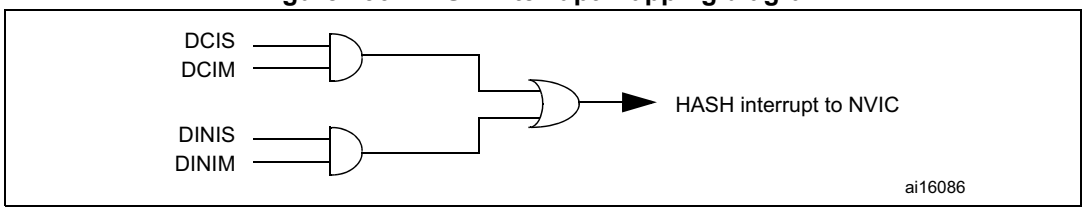

25.4 HASH registers

The HASH core is associated with several control and status registers and five message digest registers.

All these registers are accessible through word accesses only, else an AHB error is generated.

25.4.1 HASH control register (HASH_CR) for STM32F415/417xx

Address offset: 0x00

Reset value: 0x0000 0000

31	30	29	28	27	26	25	24	23	22	21	20	19	18	17	16
Reserved															LKEY
															rw

15	14	13	12	11	10	9	8	7	6	5	4	3	2	1	0
Reserved			DINNE	NBW				ALGO[0]	MODE	DATATYPE		DMAE	INIT	Reserved	
			r	r	r	r	r	rw	rw	rw	rw	rw	w		

Bits 31:17 Reserved, forced by hardware to 0.

Bit 16 **LKEY:** Long key selection

This bit selects between short key (≤64 bytes) or long key (> 64 bytes) in HMAC mode

0: Short key (≤64 bytes)

1: Long key (> 64 bytes)

Note: This selection is only taken into account when the INIT bit is set and MODE = 1. Changing this bit during a computation has no effect.

Bits 15:13 Reserved, forced by hardware to 0.

Bit 12 **DINNE:** DIN not empty

This bit is set when the HASH_DIN register holds valid data (that is after being written at least once). It is cleared when either the INIT bit (initialization) or the DCAL bit (completion of the previous message processing) is written to 1.

0: No data are present in the data input buffer

1: The input buffer contains at least one word of data

Bits 11:8 **NBW:** Number of words already pushed

This bitfield reflects the number of words in the message that have already been pushed into the IN FIFO.

NBW increments (+1) when a write access is performed to the HASH_DIN register while DINNE = 1.

It goes to 0000 when the INIT bit is written to 1 or when a digest calculation starts (DCAL written to 1 or DMA end of transfer).

- If the DMA is not used:

0000 and DINNE=0: no word has been pushed into the DIN buffer (the buffer is empty, both the HASH_DIN register and the IN FIFO are empty)

0000 and DINNE=1: 1 word has been pushed into the DIN buffer (The HASH_DIN register contains 1 word, the IN FIFO is empty)

0001: 2 words have been pushed into the DIN buffer (the HASH_DIN register and the IN FIFO contain 1 word each)

...

1111: 16 words have been pushed into the DIN buffer

- If the DMA is used, NBW is the exact number of words that have been pushed into the IN FIFO.

Bit 7 **ALGO[1:0]:** Algorithm selection

These bits selects the SHA-1 or the MD5 algorithm:

0: SHA-1 algorithm selected

1: MD5 algorithm selected

Note: This selection is only taken into account when the INIT bit is set. Changing this bit during a computation has no effect.

Bit 6 **MODE:** Mode selection

This bit selects the HASH or HMAC mode for the selected algorithm:

0: Hash mode selected

1: HMAC mode selected. LKEY must be set if the key being used is longer than 64 bytes.

Note: This selection is only taken into account when the INIT bit is set. Changing this bit during a computation has no effect.

Bits 5:4 **DATATYPE:** Data type selection

Defines the format of the data entered into the HASH_DIN register:

00: 32-bit data. The data written into HASH_DIN are directly used by the HASH processing, without reordering.

01: 16-bit data, or half-word. The data written into HASH_DIN are considered as 2 half-words, and are swapped before being used by the HASH processing.

10: 8-bit data, or bytes. The data written into HASH_DIN are considered as 4 bytes, and are swapped before being used by the HASH processing.

11: bit data, or bit-string. The data written into HASH_DIN are considered as 32 bits (1st bit of the sting at position 0), and are swapped before being used by the HASH processing (1st bit of the string at position 31).

Bit 3 **DMAE:** DMA enable

0: DMA transfers disabled

1: DMA transfers enabled. A DMA request is sent as soon as the HASH core is ready to receive data.

Note: 1: This bit is cleared by hardware when the DMA asserts the DMA terminal count signal (while transferring the last data of the message). This bit is not cleared when the INIT bit is written to 1.

2: If this bit is written to 0 while a DMA transfer has already been requested to the DMA, DMAE is cleared but the current transfer is not aborted. Instead, the DMA interface remains internally enabled until the transfer is complete or INIT is written to 1.

Bit 2 **INIT:** Initialize message digest calculation

Writing this bit to 1 resets the hash processor core, so that the HASH is ready to compute the message digest of a new message.

Writing this bit to 0 has no effect.

Reading this bit always return 0.

Bits 1:0 Reserved, must be kept cleared.

25.4.2 HASH control register (HASH_CR) for STM32F43xxx

Address offset: 0x00

Reset value: 0x0000 0000

31	30	29	28	27	26	25	24	23	22	21	20	19	18	17	16
Reserved													ALGO[1]	Reserved	LKEY
													rw		rw

15	14	13	12	11	10	9	8	7	6	5	4	3	2	1	0
Reserved		MDMAT	DINNE	NBW				ALGO[0]	MODE	DATATYPE		DMAE	INIT	Reserved	
		rw	r	r	r	r	r	rw	rw	rw	rw	rw	w		

Bits 31:19 Reserved, forced by hardware to 0.

Bit 17 Reserved, forced by hardware to 0.

Bit 16 **LKEY:** Long key selection

This bit selects between short key (≤64 bytes) or long key (> 64 bytes) in HMAC mode

0: Short key (≤64 bytes)

1: Long key (> 64 bytes)

Note: This selection is only taken into account when the INIT bit is set and MODE = 1. Changing this bit during a computation has no effect.

Bits 15:14 Reserved, forced by hardware to 0.

Bit 13 **MDMAT:** Multiple DMA Transfers

This bit is set when hashing large files when multiple DMA transfers are needed.

0: DCAL is automatically set at the end of a DMA transfer.

1: DCAL is not automatically set at the end of a DMA transfer.

Bit 12 **DINNE:** DIN not empty

This bit is set when the HASH_DIN register holds valid data (that is after being written at least once). It is cleared when either the INIT bit (initialization) or the DCAL bit (completion of the previous message processing) is written to 1.

0: No data are present in the data input buffer

1: The input buffer contains at least one word of data

Bits 11:8 **NBW:** Number of words already pushed

This bitfield reflects the number of words in the message that have already been pushed into the IN FIFO.

NBW increments (+1) when a write access is performed to the HASH_DIN register while DINNE = 1.

It goes to 0000 when the INIT bit is written to 1 or when a digest calculation starts (DCAL written to 1 or DMA end of transfer).

- If the DMA is not used:

0000 and DINNE=0: no word has been pushed into the DIN buffer (the buffer is empty, both the HASH_DIN register and the IN FIFO are empty)

0000 and DINNE=1: 1 word has been pushed into the DIN buffer (The HASH_DIN register contains 1 word, the IN FIFO is empty)

0001: 2 words have been pushed into the DIN buffer (the HASH_DIN register and the IN FIFO contain 1 word each)

...

1111: 16 words have been pushed into the DIN buffer

- If the DMA is used, NBW is the exact number of words that have been pushed into the IN FIFO.

Bit 18 and bit 7 **ALGO[1:0]:** Algorithm selection

These bits selects the SHA-1, SHA-224, SHA256 or the MD5 algorithm:

00: SHA-1 algorithm selected

01: MD5 algorithm selected

10: SHA224 algorithm selected

11: SHA256 algorithm selected

Note: This selection is only taken into account when the INIT bit is set. Changing this bit during a computation has no effect.

Bit 6 **MODE:** Mode selection

This bit selects the HASH or HMAC mode for the selected algorithm:

0: Hash mode selected

1: HMAC mode selected. LKEY must be set if the key being used is longer than 64 bytes.

Note: This selection is only taken into account when the INIT bit is set. Changing this bit during a computation has no effect.

Bits 5:4 **DATATYPE:** Data type selection

Defines the format of the data entered into the HASH_DIN register:

00: 32-bit data. The data written into HASH_DIN are directly used by the HASH processing, without reordering.

01: 16-bit data, or half-word. The data written into HASH_DIN are considered as 2 half-words, and are swapped before being used by the HASH processing.

10: 8-bit data, or bytes. The data written into HASH_DIN are considered as 4 bytes, and are swapped before being used by the HASH processing.

11: bit data, or bit-string. The data written into HASH_DIN are considered as 32 bits (1st bit of the sting at position 0), and are swapped before being used by the HASH processing (1st bit of the string at position 31).

Bit 3 **DMAE:** DMA enable

0: DMA transfers disabled

1: DMA transfers enabled. A DMA request is sent as soon as the HASH core is ready to receive data.

Note: 1: This bit is cleared by hardware when the DMA asserts the DMA terminal count signal (while transferring the last data of the message). This bit is not cleared when the INIT bit is written to 1.

2: If this bit is written to 0 while a DMA transfer has already been requested to the DMA, DMAE is cleared but the current transfer is not aborted. Instead, the DMA interface remains internally enabled until the transfer is complete or INIT is written to 1.

Bit 2 **INIT:** Initialize message digest calculation

Writing this bit to 1 resets the hash processor core, so that the HASH is ready to compute the message digest of a new message.

Writing this bit to 0 has no effect.

Reading this bit always return 0.

Bits 1:0 Reserved, must be kept cleared.

25.4.3 HASH data input register (HASH_DIN)

Address offset: 0x04

Reset value: 0x0000 0000

HASH_DIN is the data input register. It is 32-bit wide. It is used to enter the message by blocks of 512 bits. When the HASH_DIN register is written to, the value presented on the AHB databus is ‘pushed’ into the HASH core and the register takes the new value presented on the AHB databus. The DATATYPE bits must previously have been configured in the HASH_CR register to get a correct message representation.

When a block of 16 words has been written to the HASH_DIN register, an intermediate digest calculation is launched:

- by writing new data into the HASH_DIN register (the first word of the next block) if the DMA is not used (intermediate digest calculation)
- automatically if the DMA is used

When the last block has been written to the HASH_DIN register, the final digest calculation (including padding) is launched:

- by writing the DCAL bit to 1 in the HASH_STR register (final digest calculation)
- automatically if the DMA is used and MDMAT bit is set to ‘0’.

When a digest calculation (intermediate or final) is in progress, any new write access to the HASH_DIN register is extended (by wait-state insertion on the AHB bus) until the HASH calculation completes.

When the HASH_DIN register is read, the last word written in this location is accessed (zero after reset).

31	30	29	28	27	26	25	24	23	22	21	20	19	18	17	16
DATAIN															
rw	rw	rw	rw	rw	rw	rw	rw	rw	rw	rw	rw	rw	rw	rw	rw
15	14	13	12	11	10	9	8	7	6	5	4	3	2	1	0
DATAIN															
rw	rw	rw	rw	rw	rw	rw	rw	rw	rw	rw	rw	rw	rw	rw	rw

Bits 31:0 **DATAIN:** Data input

Read = returns the current register content.
Write = the current register content is pushed into the IN FIFO, and the register takes the new value presented on the AHB databus.

25.4.4 HASH start register (HASH_STR)

Address offset: 0x08

Reset value: 0x0000 0000

The HASH_STR register has two functions:

- It is used to define the number of valid bits in the last word of the message entered in the hash processor (that is the number of valid least significant bits in the last data written into the HASH_DIN register)
- It is used to start the processing of the last block in the message by writing the DCAL bit to 1

31	30	29	28	27	26	25	24	23	22	21	20	19	18	17	16
Reserved															
15	14	13	12	11	10	9	8	7	6	5	4	3	2	1	0
Reserved							DCAL	Reserved			NBLW				
							w				rw	rw	rw	rw	rw

Bits 31:9 Reserved, forced by hardware to 0.

Bit 8 **DCAL:** Digest calculation

Writing this bit to 1 starts the message padding, using the previously written value of NBLW, and starts the calculation of the final message digest with all data words written to the IN FIFO since the INIT bit was last written to 1.

Reading this bit returns 0.

Note

Bits 7:5 Reserved, forced by hardware to 0.

Bits 4:0 **NBLW:** Number of valid bits in the last word of the message in the bit string organization of hash processor

When these bits are written and DCAL is at ‘0’, they take the value on the AHB databus:

0x00: All 32 bits of the last data written in the bit string organization of hash processor (after data swapping) are valid.

0x01: Only bit [31] of the last data written in the bit string organization of hash processor (after data swapping) are valid

0x02: Only bits [31:30] of the last data written in the bit string organization of hash processor (after data swapping) are valid

0x03: Only bits [31:29] of the last data written in the bit string organization of hash processor (after data swapping) are valid

...

0x1F: Only bits [0] of the last data written in the bit string organization of hash processor (after data swapping) are valid

When these bits are written and DCAL is at ‘1’, the bitfield is not changed.

Reading them returns the last value written to NBLW.

Note: These bits must be configured before setting the DCAL bit, else they are not taken into account. Especially, it is not possible to configure NBLW and set DCAL at the same time.

25.4.5 HASH digest registers (HASH_HR0..4/5/6/7)

Address offset: 0x0C to 0x1C (STM32F415/417xx), plus 0x310 to 0x32C (STM32F43xxx)

Reset value: 0x0000 0000

These registers contain the message digest result named as:

1. H0, H1, H2, H3 and H4, respectively, in the SHA1 algorithm description

   Note that in this case, the HASH_H5 to HASH_H7 register is not used, and is read as zero.
2. A, B, C and D, respectively, in the MD5 algorithm description

   Note that in this case, the HASH_H4 to HASH_H7 register is not used, and is read as zero.
3. H0 to H6, respectively, in the SHA224 algorithm description,

   Note that in this case, the HASH_H7 register is not used, and is read as zero.
4. H0 to H7, respectively, in the SHA256 algorithm description,

If a read access to one of these registers occurs while the HASH core is calculating an intermediate digest or a final message digest (that is when the DCAL bit has been written to 1), then the read is stalled until the completion of the HASH calculation.

Note: H0, H1, H2, H3 and H4 mapping are duplicated in two region.

HASH_HR0

Address offset: 0x0C and 0x310

31	30	29	28	27	26	25	24	23	22	21	20	19	18	17	16
H0															
r	r	r	r	r	r	r	r	r	r	r	r	r	r	r	r
15	14	13	12	11	10	9	8	7	6	5	4	3	2	1	0
H0															
r	r	r	r	r	r	r	r	r	r	r	r	r	r	r	r

HASH_HR1

Address offset: 0x10 and 0x314

31	30	29	28	27	26	25	24	23	22	21	20	19	18	17	16
H1															
r	r	r	r	r	r	r	r	r	r	r	r	r	r	r	r
15	14	13	12	11	10	9	8	7	6	5	4	3	2	1	0
H1															
r	r	r	r	r	r	r	r	r	r	r	r	r	r	r	r

HASH_HR2

Address offset: 0x14 and 0x318

31	30	29	28	27	26	25	24	23	22	21	20	19	18	17	16
H2															
r	r	r	r	r	r	r	r	r	r	r	r	r	r	r	r

15	14	13	12	11	10	9	8	7	6	5	4	3	2	1	0
H2															
r	r	r	r	r	r	r	r	r	r	r	r	r	r	r	r

HASH_HR3

Address offset: 0x18 and 0x31C

31	30	29	28	27	26	25	24	23	22	21	20	19	18	17	16
H3															
r	r	r	r	r	r	r	r	r	r	r	r	r	r	r	r

15	14	13	12	11	10	9	8	7	6	5	4	3	2	1	0
H3															
r	r	r	r	r	r	r	r	r	r	r	r	r	r	r	r

HASH_HR4

Address offset: 0x1C and 0x320

31	30	29	28	27	26	25	24	23	22	21	20	19	18	17	16
H4															
r	r	r	r	r	r	r	r	r	r	r	r	r	r	r	r

15	14	13	12	11	10	9	8	7	6	5	4	3	2	1	0
H4															
r	r	r	r	r	r	r	r	r	r	r	r	r	r	r	r

HASH_HR5

Address offset: 0x324

31	30	29	28	27	26	25	24	23	22	21	20	19	18	17	16
H5															
r	r	r	r	r	r	r	r	r	r	r	r	r	r	r	r

15	14	13	12	11	10	9	8	7	6	5	4	3	2	1	0
H5															
r	r	r	r	r	r	r	r	r	r	r	r	r	r	r	r

HASH_HR6

Address offset: 0x328

31	30	29	28	27	26	25	24	23	22	21	20	19	18	17	16
H6															
r	r	r	r	r	r	r	r	r	r	r	r	r	r	r	r

15	14	13	12	11	10	9	8	7	6	5	4	3	2	1	0
H6															
r	r	r	r	r	r	r	r	r	r	r	r	r	r	r	r

HASH_HR7

Address offset: 0x32C

31	30	29	28	27	26	25	24	23	22	21	20	19	18	17	16
H7															
r	r	r	r	r	r	r	r	r	r	r	r	r	r	r	r
15	14	13	12	11	10	9	8	7	6	5	4	3	2	1	0
H7															
r	r	r	r	r	r	r	r	r	r	r	r	r	r	r	r

Note: When starting a digest computation for a new bit stream (by writing the INIT bit to 1), these registers assume their reset values.

25.4.6 HASH interrupt enable register (HASH_IMR)

Address offset: 0x20

Reset value: 0x0000 0000

31	30	29	28	27	26	25	24	23	22	21	20	19	18	17	16
Reserved															
15	14	13	12	11	10	9	8	7	6	5	4	3	2	1	0
Reserved														DCIE	DINIE
														rw	rw

Bits 31:2 Reserved, forced by hardware to 0.

Bit 1 **DCIE:** Digest calculation completion interrupt enable
0: Digest calculation completion interrupt disabled
1: Digest calculation completion interrupt enabled.

Bit 0 **DINIE:** Data input interrupt enable
0: Data input interrupt disabled
1: Data input interrupt enabled

25.4.7 HASH status register (HASH_SR)

Address offset: 0x24

Reset value: 0x0000 0001

31	30	29	28	27	26	25	24	23	22	21	20	19	18	17	16
Reserved															
15	14	13	12	11	10	9	8	7	6	5	4	3	2	1	0
Reserved												BUSY	DMAS	DCIS	DINIS
												r	r	rc_w0	rc_w0

Bits 31:4 Reserved, forced by hardware to 0.

Bit 3 **BUSY:** Busy bit

0: No block is currently being processed
1: The hash core is processing a block of data

Bit 2 **DMAS:** DMA Status

This bit provides information on the DMA interface activity. It is set with DMAE and cleared when DMAE=0 and no DMA transfer is ongoing. No interrupt is associated with this bit.

0: DMA interface is disabled (DMAE=0) and no transfer is ongoing
1: DMA interface is enabled (DMAE=1) or a transfer is ongoing

Bit 1 **DCIS:** Digest calculation completion interrupt status

This bit is set by hardware when a digest becomes ready (the whole message has been processed). It is cleared by writing it to 0 or by writing the INIT bit to 1 in the HASH_CR register.

0: No digest available in the HASH_Hx registers
1: Digest calculation complete, a digest is available in the HASH_Hx registers. An interrupt is generated if the DCIE bit is set in the HASH_IMR register.

Bit 0 **DINIS:** Data input interrupt status

This bit is set by hardware when the input buffer is ready to get a new block (16 locations are free). It is cleared by writing it to 0 or by writing the HASH_DIN register.

0: Less than 16 locations are free in the input buffer
1: A new block can be entered into the input buffer. An interrupt is generated if the DINIE bit is set in the HASH_IMR register.

25.4.8 HASH context swap registers (HASH_CSRx)

Address offset: 0x0F8 to 0x1C0

- For HASH_CSR0 register: Reset value is 0x0000 0002.
- For others registers: Reset value is 0x0000 0000 , except for STM32F43xxx devices where the HASH_CSR2 register reset value is 0x2000 0000

Additional registers are available from 0x1C1 to 0x1CC on STM32F43xxx:

- Reset value: 0x0000 0000.

These registers contain the complete internal register states of the hash processor, and are useful when a context swap has to be done because a high-priority task has to use the hash processor while it is already in use by another task.

When such an event occurs, the HASH_CSRx registers have to be read and the read values have to be saved somewhere in the system memory space. Then the hash processor can be used by the preemptive task, and when hash computation is finished, the saved context can be read from memory and written back into these HASH_CSRx registers.

HASH_CSRx

Address offset: 0x0F8 to 0x1C0 on STM32F415/417xx

Address offset: 0x0F8 to 0x1CC on STM32F43xxx

31	30	29	28	27	26	25	24	23	22	21	20	19	18	17	16
CSx															
rw	rw	rw	rw	rw	rw	rw	rw	rw	rw	rw	rw	rw	rw	rw	rw
15	14	13	12	11	10	9	8	7	6	5	4	3	2	1	0
CSx															
rw	rw	rw	rw	rw	rw	rw	rw	rw	rw	rw	rw	rw	rw	rw	rw

25.4.9 HASH register map

Table 9 gives the summary HASH register map and reset values.

Table 117. HASH register map and reset values on STM32F415/417xx

Offset	Register name reset value	Register size																															
		31	30	29	28	27	26	25	24	23	22	21	20	19	18	17	16	15	14	13	12	11	10	9	8	7	6	5	4	3	2	1	0
0x00	HASH_CR	Reserved															LKEY	Reserved			DINNE	NBW				ALGO[0]	MODE	DATATYPE		DMAE	INIT	Reserved	
	Reset value																0				0	0	0	0	0	0	0	0	0	0	0		
0x04	HASH_DIN	DATAIN																															
	Reset value	0	0	0	0	0	0	0	0	0	0	0	0	0	0	0	0	0	0	0	0	0	0	0	0	0	0	0	0	0	0	0	0
0x08	HASH_STR	Reserved																							DCAL	Reserved				NBLW			
	Reset value																								0				0	0	0	0	0
0x0C	HASH_HR0	H0																															
	Reset value	0	0	0	0	0	0	0	0	0	0	0	0	0	0	0	0	0	0	0	0	0	0	0	0	0	0	0	0	0	0	0	0
0x10	HASH_HR1	H1																															
	Reset value	0	0	0	0	0	0	0	0	0	0	0	0	0	0	0	0	0	0	0	0	0	0	0	0	0	0	0	0	0	0	0	0
0x14	HASH_HR2	H2																															
	Reset value	0	0	0	0	0	0	0	0	0	0	0	0	0	0	0	0	0	0	0	0	0	0	0	0	0	0	0	0	0	0	0	0
0x18	HASH_HR3	H3																															
	Reset value	0	0	0	0	0	0	0	0	0	0	0	0	0	0	0	0	0	0	0	0	0	0	0	0	0	0	0	0	0	0	0	0
0x1C	HASH_HR4	H4																															
	Reset value	0	0	0	0	0	0	0	0	0	0	0	0	0	0	0	0	0	0	0	0	0	0	0	0	0	0	0	0	0	0	0	0
0x20	HASH_IMR	Reserved																														DCIE	DINIE
	Reset value	0	0	0	0	0	0	0	0	0	0	0	0	0	0	0	0	0	0	0	0	0	0	0	0	0	0	0	0	0	0	0	0
0x24	HASH_SR	Reserved																												BUSY	DMAS	DCIS	DINIS
	Reset value																													0	0	0	1
0xF8	HASH_CSR0	CSR0																															
	Reset value	0	0	0	0	0	0	0	0	0	0	0	0	0	0	0	0	0	0	0	0	0	0	0	0	0	0	0	0	0	0	1	0
...																																	
0x1C0	HASH_CSR50	CSR50																															
	Reset value	0	0	0	0	0	0	0	0	0	0	0	0	0	0	0	0	0	0	0	0	0	0	0	0	0	0	0	0	0	0	0	0
Reserved																																	
0x310	HASH_HR0	H0																															
	Reset value	0	0	0	0	0	0	0	0	0	0	0	0	0	0	0	0	0	0	0	0	0	0	0	0	0	0	0	0	0	0	0	0
0x314	HASH_HR1	H1																															
	Reset value	0	0	0	0	0	0	0	0	0	0	0	0	0	0	0	0	0	0	0	0	0	0	0	0	0	0	0	0	0	0	0	0

Table 117. HASH register map and reset values on STM32F415/417xx (continued)

Offset	Register name reset value	Register size																															
		31	30	29	28	27	26	25	24	23	22	21	20	19	18	17	16	15	14	13	12	11	10	9	8	7	6	5	4	3	2	1	0
0x318	HASH_HR2	H2																															
	Reset value	0	0	0	0	0	0	0	0	0	0	0	0	0	0	0	0	0	0	0	0	0	0	0	0	0	0	0	0	0	0	0	0
0x31C	HASH_HR3	H3																															
	Reset value	0	0	0	0	0	0	0	0	0	0	0	0	0	0	0	0	0	0	0	0	0	0	0	0	0	0	0	0	0	0	0	0
0x320	HASH_HR4	H4																															
	Reset value	0	0	0	0	0	0	0	0	0	0	0	0	0	0	0	0	0	0	0	0	0	0	0	0	0	0	0	0	0	0	0	0

Table 118. HASH register map and reset values on STM32F43xxx

Offset	Register name reset value	Register size																															
		31	30	29	28	27	26	25	24	23	22	21	20	19	18	17	16	15	14	13	12	11	10	9	8	7	6	5	4	3	2	1	0
0x00	HASH_CR	Reserved													ALGO[1]	Reserved	LKEY	Reserved		MDMAT	DINNE	NBW				ALGO[0]	MODE	DATATYPE		DMAE	INIT	Reserved	
	Reset value														0		0			0	0	0	0	0	0	0	0	0	0	0	0		
0x04	HASH_DIN	DATAIN																															
	Reset value	0	0	0	0	0	0	0	0	0	0	0	0	0	0	0	0	0	0	0	0	0	0	0	0	0	0	0	0	0	0	0	0
0x08	HASH_STR	Reserved																							DCAL	Reserved				NBLW			
	Reset value																								0					0	0	0	0	0
0x0C	HASH_HR0	H0																															
	Reset value	0	0	0	0	0	0	0	0	0	0	0	0	0	0	0	0	0	0	0	0	0	0	0	0	0	0	0	0	0	0	0	0
0x10	HASH_HR1	H1																															
	Reset value	0	0	0	0	0	0	0	0	0	0	0	0	0	0	0	0	0	0	0	0	0	0	0	0	0	0	0	0	0	0	0	0
0x14	HASH_HR2	H2																															
	Reset value	0	0	0	0	0	0	0	0	0	0	0	0	0	0	0	0	0	0	0	0	0	0	0	0	0	0	0	0	0	0	0	0
0x18	HASH_HR3	H3																															
	Reset value	0	0	0	0	0	0	0	0	0	0	0	0	0	0	0	0	0	0	0	0	0	0	0	0	0	0	0	0	0	0	0	0
0x1C	HASH_HR4	H4																															
	Reset value	0	0	0	0	0	0	0	0	0	0	0	0	0	0	0	0	0	0	0	0	0	0	0	0	0	0	0	0	0	0	0	0
0x20	HASH_IMR	Reserved																														DCIE	DINIE
	Reset value	0	0	0	0	0	0	0	0	0	0	0	0	0	0	0	0	0	0	0	0	0	0	0	0	0	0	0	0	0	0	0	0
0x24	HASH_SR	Reserved																												BUSY	DMAS	DCIS	DINIS
	Reset value																													0	0	0	1

Table 118. HASH register map and reset values on STM32F43xxx (continued)

Offset	Register name reset value	Register size																															
		31	30	29	28	27	26	25	24	23	22	21	20	19	18	17	16	15	14	13	12	11	10	9	8	7	6	5	4	3	2	1	0
0xF8	HASH_CSR0	CSR0																															
	Reset value	0	0	0	0	0	0	0	0	0	0	0	0	0	0	0	0	0	0	0	0	0	0	0	0	0	0	0	0	0	0	1	0
...																																	
...																																	
0x1CC	HASH_CSR53	CSR53																															
	Reset value	0	0	0	0	0	0	0	0	0	0	0	0	0	0	0	0	0	0	0	0	0	0	0	0	0	0	0	0	0	0	0	0
Reserved																																	
0x310	HASH_HR0	H0																															
	Reset value	0	0	0	0	0	0	0	0	0	0	0	0	0	0	0	0	0	0	0	0	0	0	0	0	0	0	0	0	0	0	0	0
0x314	HASH_HR1	H1																															
	Reset value	0	0	0	0	0	0	0	0	0	0	0	0	0	0	0	0	0	0	0	0	0	0	0	0	0	0	0	0	0	0	0	0
0x318	HASH_HR2	H2																															
	Reset value	0	0	0	0	0	0	0	0	0	0	0	0	0	0	0	0	0	0	0	0	0	0	0	0	0	0	0	0	0	0	0	0
0x31C	HASH_HR3	H3																															
	Reset value	0	0	0	0	0	0	0	0	0	0	0	0	0	0	0	0	0	0	0	0	0	0	0	0	0	0	0	0	0	0	0	0
0x320	HASH_HR4	H4																															
	Reset value	0	0	0	0	0	0	0	0	0	0	0	0	0	0	0	0	0	0	0	0	0	0	0	0	0	0	0	0	0	0	0	0
0x324	HASH_HR5	H5																															
	Reset value	0	0	0	0	0	0	0	0	0	0	0	0	0	0	0	0	0	0	0	0	0	0	0	0	0	0	0	0	0	0	0	0
0x328	HASH_HR6	H6																															
	Reset value	0	0	0	0	0	0	0	0	0	0	0	0	0	0	0	0	0	0	0	0	0	0	0	0	0	0	0	0	0	0	0	0
0x32C	HASH_HR7	H7																															
	Reset value	0	0	0	0	0	0	0	0	0	0	0	0	0	0	0	0	0	0	0	0	0	0	0	0	0	0	0	0	0	0	0	0

26 Real-time clock (RTC)

This section applies to the whole STM32F4xx family, unless otherwise specified.

26.1 Introduction

The real-time clock (RTC) is an independent BCD timer/counter. The RTC provides a time-of-day clock/calendar, two programmable alarm interrupts, and a periodic programmable wakeup flag with interrupt capability. The RTC also includes an automatic wakeup unit to manage low-power modes.

Two 32-bit registers contain the seconds, minutes, hours (12- or 24-hour format), day (day of week), date (day of month), month, and year, expressed in binary coded decimal format (BCD). The sub-seconds value is also available in binary format.

Compensations for 28-, 29- (leap year), 30-, and 31-day months are performed automatically. Daylight saving time compensation can also be performed.

Additional 32-bit registers contain the programmable alarm subseconds, seconds, minutes, hours, day, and date.

A digital calibration feature is available to compensate for any deviation in crystal oscillator accuracy.

After backup domain reset, all RTC registers are protected against possible parasitic write accesses.

As long as the supply voltage remains in the operating range, the RTC never stops, regardless of the device status (Run mode, low-power mode or under reset).

26.2 RTC main features

The RTC unit main features are the following (see *Figure 237: RTC block diagram*):

- Calendar with subseconds, seconds, minutes, hours (12 or 24 format), day (day of week), date (day of month), month, and year.
- Daylight saving compensation programmable by software.
- Two programmable alarms with interrupt function. The alarms can be triggered by any combination of the calendar fields.
- Automatic wakeup unit generating a periodic flag that triggers an automatic wakeup interrupt.
- Reference clock detection: a more precise second source clock (50 or 60 Hz) can be used to enhance the calendar precision.
- Accurate synchronization with an external clock using the subsecond shift feature.
- Maskable interrupts/events:
  - Alarm A
  - Alarm B
  - Wakeup interrupt
  - Timestamp
  - Tamper detection
- Digital calibration circuit (periodic counter correction)
  - 5 ppm accuracy
  - 0.95 ppm accuracy, obtained in a calibration window of several seconds
- Timestamp function for event saving (1 event)
- Tamper detection:
  - 2 tamper events with configurable filter and internal pull-up.
- 20 backup registers (80 bytes). The backup registers are reset when a tamper detection event occurs.
- Alternate function output (RTC_OUT) which selects one of the following two outputs:
  - RTC_CALIB: 512 Hz or 1 Hz clock output (with an LSE frequency of 32.768 kHz).

    This output is enabled by setting the COE bit in the RTC_CR register. It is routed to the device RTC_AF1 function.
  - RTC_ALARM (Alarm A, Alarm B or wakeup).

    This output is selected by configuring the OSEL[1:0] bits in the RTC_CR register. It is routed to the device RTC_AF1 function.
- RTC alternate function inputs:
  - RTC_TS: timestamp event detection. It is routed to the device RTC_AF1 and RTC_AF2 functions.
  - RTC_TAMP1: TAMPER1 event detection. It is routed to the device RTC_AF1 and RTC_AF2 functions.
  - RTC_TAMP2: TAMPER2 event detection.
  - RTC_REFIN: reference clock input (usually the mains, 50 or 60 Hz).

Refer to Section 8.3.15: Selection of RTC_AF1 and RTC_AF2 alternate functions.

Figure 237. RTC block diagram

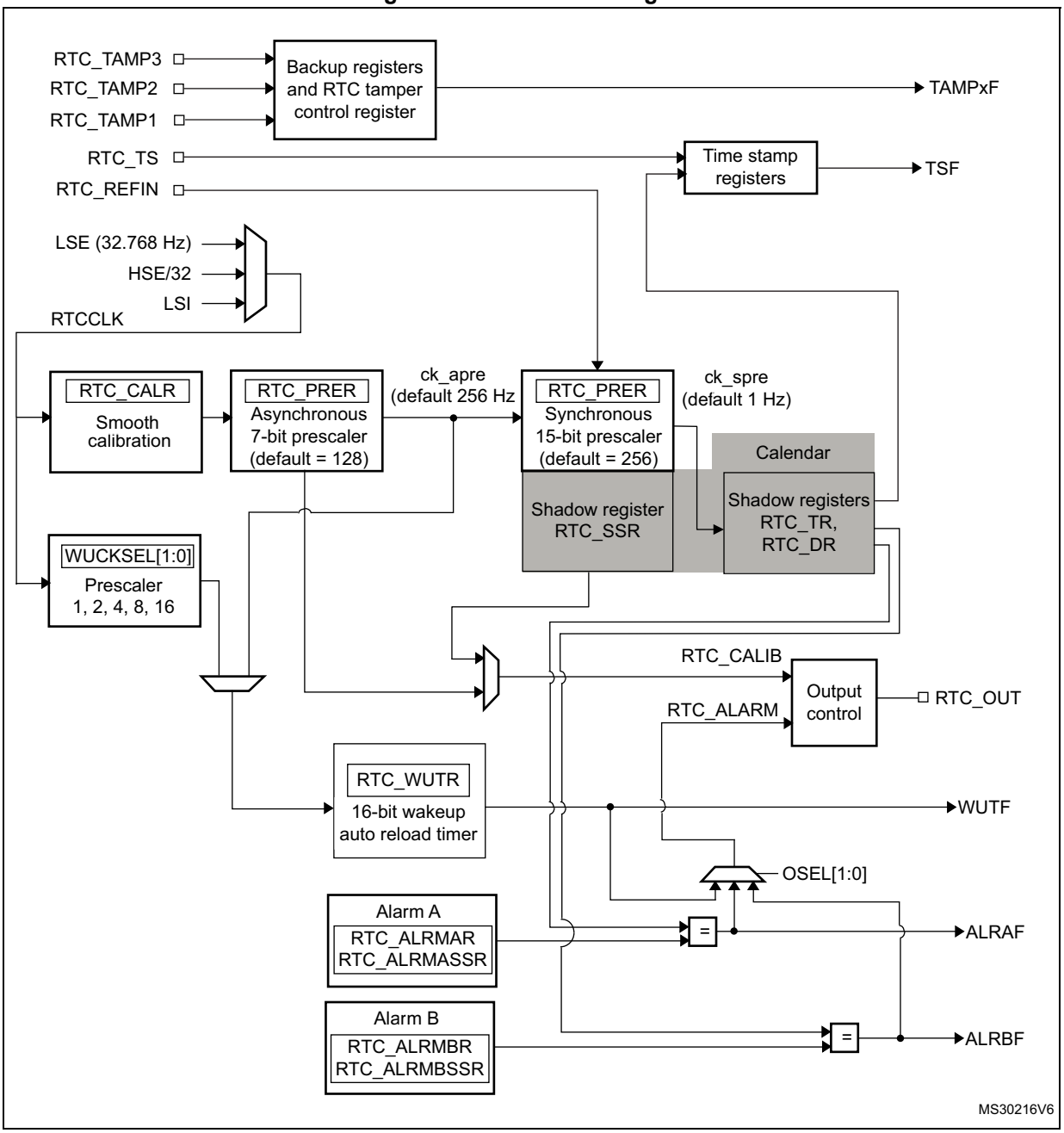

1. On STM32F4xx devices, the RTC_AF1 and RTC_AF2 alternate functions are connected to PC13 and PI8, respectively.

26.3 RTC functional description

26.3.1 Clock and prescalers

The RTC clock source (RTCCLK) is selected through the clock controller among the LSE clock, the LSI oscillator clock, and the HSE clock. For more information on the RTC clock source configuration, refer to *Section 7: Reset and clock control for STM32F405xx/07xx and STM32F415xx/17xx(RCC)* and *Section 6: Reset and clock control for STM32F42xxx and STM32F43xxx (RCC)*.

A programmable prescaler stage generates a 1 Hz clock which is used to update the calendar. To minimize power consumption, the prescaler is split into 2 programmable prescalers (see *Figure 237: RTC block diagram*):

- A 7-bit asynchronous prescaler configured through the PREDIV_A bits of the RTC_PRER register.
- A 15-bit synchronous prescaler configured through the PREDIV_S bits of the RTC_PRER register.

Note: When both prescalers are used, it is recommended to configure the asynchronous prescaler to a high value to minimize consumption.

The asynchronous prescaler division factor is set to 128, and the synchronous division factor to 256, to obtain an internal clock frequency of 1 Hz (ck_spre) with an LSE frequency of 32.768 kHz.

The minimum division factor is 1 and the maximum division factor is 2^{22}.

This corresponds to a maximum input frequency of around 4 MHz.

f_{ck_apre} is given by the following formula:

$$f_{CK_APRE} = \frac{f_{RTCCLK}}{PREDIV_A + 1}$$

The ck_apre clock is used to clock the binary RTC_SSR subseconds downcounter. When it reaches 0, RTC_SSR is reloaded with the content of PREDIV_S.

f_{ck_spre} is given by the following formula:

$$f_{CK_SPRE} = \frac{f_{RTCCLK}}{(PREDIV_S + 1) \times (PREDIV_A + 1)}$$

The ck_spre clock can be used either to update the calendar or as timebase for the 16-bit wakeup auto-reload timer. To obtain short timeout periods, the 16-bit wakeup auto-reload timer can also run with the RTCCLK divided by the programmable 4-bit asynchronous prescaler (see *Section 26.3.4: Periodic auto-wakeup* for details).

26.3.2 Real-time clock and calendar

The RTC calendar time and date registers are accessed through shadow registers which are synchronized with PCLK1 (APB1 clock). They can also be accessed directly in order to avoid waiting for the synchronization duration.

- RTC_SSR for the subseconds
- RTC_TR for the time
- RTC_DR for the date

Every two RTCCLK periods, the current calendar value is copied into the shadow registers, and the RSF bit of RTC_ISR register is set (see *Section 26.6.4*). The copy is not performed in Stop and Standby mode. When exiting these modes, the shadow registers are updated after up to 2 RTCCLK periods.

When the application reads the calendar registers, it accesses the content of the shadow registers.t is possible to make a direct access to the calendar registers by setting the BYPSHAD control bit in the RTC_CR register. By default, this bit is cleared, and the user accesses the shadow registers.

When reading the RTC_SSR, RTC_TR or RTC_DR registers in BYPSHAD=0 mode, the frequency of the APB clock (f_{APB}) must be at least 7 times the frequency of the RTC clock (f_{RTCCLK}).

The shadow registers are reset by system reset.

26.3.3 Programmable alarms

The RTC unit provides two programmable alarms, Alarm A and Alarm B.

The programmable alarm functions are enabled through the ALRAIE and ALRBIE bits in the RTC_CR register. The ALRAF and ALRBF flags are set to 1 if the calendar subseconds, seconds, minutes, hours, date or day match the values programmed in the alarm registers RTC_ALRMASSR/RTC_ALRMAR and RTC_ALRMBSSR/RTC_ALRMBR, respectively. Each calendar field can be independently selected through the MSKx bits of the RTC_ALRMAR and RTC_ALRMBR registers, and through the MASKSSx bits of the RTC_ALRMASSR and RTC_ALRMBSSR registers. The alarm interrupts are enabled through the ALRAIE and ALRBIE bits in the RTC_CR register.

Alarm A and Alarm B (if enabled by bits OSEL[1:0] in RTC_CR register) can be routed to the RTC_ALARM output. RTC_ALARM polarity can be configured through bit POL in the RTC_CR register.

Caution: If the seconds field is selected (MSK0 bit reset in RTC_ALRMAR or RTC_ALRMBR), the synchronous prescaler division factor set in the RTC_PRER register must be at least 3 to ensure correct behavior.

26.3.4 Periodic auto-wakeup

The periodic wakeup flag is generated by a 16-bit programmable auto-reload down-counter. The wakeup timer range can be extended to 17 bits.

The wakeup function is enabled through the WUTE bit in the RTC_CR register.

The wakeup timer clock input can be:

- RTC clock (RTCCLK) divided by 2, 4, 8, or 16.

  When RTCCLK is LSE(32.768kHz), this allows configuring the wakeup interrupt period from 122 µs to 32 s, with a resolution down to 61µs.
- ck_spre (usually 1 Hz internal clock)

  When ck_spre frequency is 1Hz, this allows achieving a wakeup time from 1 s to around 36 hours with one-second resolution. This large programmable time range is divided in 2 parts:
  - from 1s to 18 hours when WUCKSEL [2:1] = 10
  - and from around 18h to 36h when WUCKSEL[2:1] = 11. In this last case 2^{16} is added to the 16-bit counter current value.When the initialization sequence is complete (see *Programming the wakeup timer on page 805*), the timer starts counting down.When the wakeup function is enabled, the down-counting remains active in low-power modes. In addition, when it reaches 0, the WUTF flag is set in the RTC_ISR register, and the wakeup counter is automatically reloaded with its reload value (RTC_WUTR register value).

The WUTF flag must then be cleared by software.

When the periodic wakeup interrupt is enabled by setting the WUTIE bit in the RTC_CR2 register, it can exit the device from low-power modes.

The periodic wakeup flag can be routed to the RTC_ALARM output provided it has been enabled through bits OSEL[1:0] of RTC_CR register. RTC_ALARM polarity can be configured through the POL bit in the RTC_CR register.

System reset, as well as low-power modes (Sleep, Stop and Standby) have no influence on the wakeup timer.

26.3.5 RTC initialization and configuration

RTC register access

The RTC registers are 32-bit registers. The APB interface introduces 2 wait-states in RTC register accesses except on read accesses to calendar shadow registers when BYPSHAD=0.

RTC register write protection

After system reset, the RTC registers are protected against parasitic write access with the DBP bit of the PWR power control register (PWR_CR). The DBP bit must be set to enable RTC registers write access.

After backup domain reset, all the RTC registers are write-protected. Writing to the RTC registers is enabled by writing a key into the Write Protection register, RTC_WPR.

The following steps are required to unlock the write protection on all the RTC registers except for RTC_ISR[13:8], RTC_TAFCR, and RTC_BKPxR.

1. Write ‘0xCA’ into the RTC_WPR register.
2. Write ‘0x53’ into the RTC_WPR register.

Writing a wrong key reactivates the write protection.

The protection mechanism is not affected by system reset.

Calendar initialization and configuration

To program the initial time and date calendar values, including the time format and the prescaler configuration, the following sequence is required:

1. Set INIT bit to 1 in the RTC_ISR register to enter initialization mode. In this mode, the calendar counter is stopped and its value can be updated.
2. Poll INITF bit of in the RTC_ISR register. The initialization phase mode is entered when INITF is set to 1. It takes from 1 to 2 RTCCLK clock cycles (due to clock synchronization).
3. To generate a 1 Hz clock for the calendar counter, program first the synchronous prescaler factor in RTC_PRER register, and then program the asynchronous prescaler factor. Even if only one of the two fields needs to be changed, 2 separate write accesses must be performed to the RTC_PRER register.
4. Load the initial time and date values in the shadow registers (RTC_TR and RTC_DR), and configure the time format (12 or 24 hours) through the FMT bit in the RTC_CR register.
5. Exit the initialization mode by clearing the INIT bit. The actual calendar counter value is then automatically loaded and the counting restarts after 4 RTCCLK clock cycles.

When the initialization sequence is complete, the calendar starts counting.

Note: After a system reset, the application can read the INITS flag in the RTC_ISR register to check if the calendar has been initialized or not. If this flag equals 0, the calendar has not been initialized since the year field is set at its backup domain reset default value (0x00).

To read the calendar after initialization, the software must first check that the RSF flag is set in the RTC_ISR register.

Daylight saving time

The daylight saving time management is performed through bits SUB1H, ADD1H, and BKP of the RTC_CR register.

Using SUB1H or ADD1H, the software can subtract or add one hour to the calendar in one single operation without going through the initialization procedure.

In addition, the software can use the BKP bit to memorize this operation.

Programming the alarm

A similar procedure must be followed to program or update the programmable alarm (Alarm A or Alarm B):

1. Clear ALRAE or ALRBIE in RTC_CR to disable Alarm A or Alarm B.
2. Poll ALRAWF or ALRBWF in RTC_ISR until it is set to make sure the access to alarm registers is allowed. This takes 1 to 2 RTCCLK clock cycles (due to clock synchronization).
3. Program the Alarm A or Alarm B registers (RTC_ALRMASSR/RTC_ALRMAR or RTC_ALRMBSSR/RTC_ALRMBR).
4. Set ALRAE or ALRBIE in the RTC_CR register to enable Alarm A or Alarm B again.

Note: Each change of the RTC_CR register is taken into account after 1 to 2 RTCCLK clock cycles due to clock synchronization.

Programming the wakeup timer

The following sequence is required to configure or change the wakeup timer auto-reload value (WUT[15:0] in RTC_WUTR):

1. Clear WUTE in RTC_CR to disable the wakeup timer.
2. Poll WUTWF until it is set in RTC_ISR to make sure the access to wakeup auto-reload counter and to WUCKSEL[2:0] bits is allowed. It takes 1 to 2 RTCCLK clock cycles (due to clock synchronization).
3. Program the wakeup auto-reload value WUT[15:0], and the wakeup clock selection (WUCKSEL[2:0] bits in RTC_CR).Set WUTE in RTC_CR to enable the timer again. The wakeup timer restarts down-counting. The WUTWF bit is cleared up to 2 RTCCLK clocks cycles after WUTE is cleared, due to clock synchronization.

26.3.6 Reading the calendar

When BYPSHAD control bit is cleared in the RTC_CR register

To read the RTC calendar registers (RTC_SSR, RTC_TR and RTC_DR) properly, the APB1 clock frequency (f_{PCLK1}) must be equal to or greater than seven times the f_{RTCCLK} RTC clock frequency. This ensures a secure behavior of the synchronization mechanism.

If the APB1 clock frequency is less than seven times the RTC clock frequency, the software must read the calendar time and date registers twice. If the second read of the RTC_TR gives the same result as the first read, this ensures that the data is correct. Otherwise a third read access must be done. In any case the APB1 clock frequency must never be lower than the RTC clock frequency.

The RSF bit is set in RTC_ISR register each time the calendar registers are copied into the RTC_SSR, RTC_TR and RTC_DR shadow registers. The copy is performed every two RTCCLK cycles. To ensure consistency between the 3 values, reading either RTC_SSR or RTC_TR locks the values in the higher-order calendar shadow registers until RTC_DR is read. In case the software makes read accesses to the calendar in a time interval smaller than 2 RTCCLK periods: RSF must be cleared by software after the first calendar read, and then the software must wait until RSF is set before reading again the RTC_SSR, RTC_TR and RTC_DR registers.

After waking up from low-power mode (Stop or Standby), RSF must be cleared by software. The software must then wait until it is set again before reading the RTC_SSR, RTC_TR and RTC_DR registers.

The RSF bit must be cleared after wakeup and not before entering low-power mode.

Note: After a system reset, the software must wait until RSF is set before reading the RTC_SSR, RTC_TR and RTC_DR registers. Indeed, a system reset resets the shadow registers to their default values.

After an initialization (refer to Calendar initialization and configuration on page 804): the software must wait until RSF is set before reading the RTC_SSR, RTC_TR and RTC_DR registers.

After synchronization (refer to Section 26.3.8: RTC synchronization): the software must wait until RSF is set before reading the RTC_SSR, RTC_TR and RTC_DR registers.

When the BYPSHAD control bit is set in the RTC_CR register (bypass shadow registers)

Reading the calendar registers gives the values from the calendar counters directly, thus eliminating the need to wait for the RSF bit to be set. This is especially useful after exiting from low-power modes (STOP or Standby), since the shadow registers are not updated during these modes.

When the BYPSHAD bit is set to 1, the results of the different registers might not be coherent with each other if an RTCCLK edge occurs between two read accesses to the registers. Additionally, the value of one of the registers may be incorrect if an RTCCLK edge occurs during the read operation. The software must read all the registers twice, and then compare the results to confirm that the data is coherent and correct. Alternatively, the software can just compare the two results of the least-significant calendar register.

Note: While BYPSHAD=1, instructions which read the calendar registers require one extra APB cycle to complete.

26.3.7 Resetting the RTC

The calendar shadow registers (RTC_SSR, RTC_TR and RTC_DR) and some bits of the RTC status register (RTC_ISR) are reset to their default values by all available system reset sources.

On the contrary, the following registers are resetted to their default values by a backup domain reset and are not affected by a system reset: the RTC current calendar registers, the RTC control register (RTC_CR), the prescaler register (RTC_PRER), the RTC calibration registers (RTC_CALIBR or RTC_CALR), the RTC shift register (RTC_SHIFTR), the RTC timestamp registers (RTC_TSSSR, RTC_TSTR and RTC_TSDR), the RTC tamper and alternate function configuration register (RTC_TAFCR), the RTC backup registers (RTC_BKPxR), the wakeup timer register (RTC_WUTR), the Alarm A and Alarm B registers (RTC_ALRMASSR/RTC_ALRMAR and RTC_ALRMBSSR/RTC_ALRMBR).

In addition, when the RTC is clocked by the LSE, it goes on running under system reset if the reset source is different from a backup domain reset one. Refer to section *RTC clock* of the *Reset and clock controller* for details about the list of the RTC clock sources that are not affected by system reset.

When a backup domain reset occurs, the RTC is stopped and all the RTC registers are set to their reset values.

26.3.8 RTC synchronization

The RTC can be synchronized to a remote clock with a high degree of precision. After reading the sub-second field (RTC_SSR or RTC_TSSSR), a calculation can be made of the precise offset between the times being maintained by the remote clock and the RTC. The RTC can then be adjusted to eliminate this offset by “shifting” its clock by a fraction of a second using RTC_SHIFTR.

RTC_SSR contains the value of the synchronous prescaler’s counter. This allows one to calculate the exact time being maintained by the RTC down to a resolution of 1 / (PREDIV_S + 1) seconds. As a consequence, the resolution can be improved by increasing the synchronous prescaler value (PREDIV_S[14:0]. The maximum resolution allowed (30.52 µs with a 32768 Hz clock) is obtained with PREDIV_S set to 0x7FFF.

However, increasing PREDIV_S means that PREDIV_A must be decreased in order to maintain the synchronous prescaler's output at 1 Hz. In this way, the frequency of the asynchronous prescaler's output increases, which may increase the RTC dynamic consumption.

The RTC can be finely adjusted using the RTC shift control register (RTC_SHIFTR). Writing to RTC_SHIFTR can shift (either delay or advance) the clock by up to a second with a resolution of 1 / (PREDIV_S + 1) seconds. The shift operation consists of adding the SUBFS[14:0] value to the synchronous prescaler counter SS[15:0]: this will delay the clock. If at the same time the ADD1S bit is set, this results in adding one second and at the same time subtracting a fraction of second, so this will advance the clock.

Caution: Before initiating a shift operation, the user must check that SS[15] = 0 in order to ensure that no overflow will occur.

As soon as a shift operation is initiated by a write to the RTC_SHIFTR register, the SHPF flag is set by hardware to indicate that a shift operation is pending. This bit is cleared by hardware as soon as the shift operation has completed.

Caution: This synchronization feature is not compatible with the reference clock detection feature: firmware must not write to RTC_SHIFTR when REFCKON=1.

26.3.9 RTC reference clock detection

The RTC calendar update can be synchronized to a reference clock RTC_REFIN, usually the mains (50 or 60 Hz). The RTC_REFIN reference clock should have a higher precision than the 32.768 kHz LSE clock. When the RTC_REFIN detection is enabled (REFCKON bit of RTC_CR set to 1), the calendar is still clocked by the LSE, and RTC_REFIN is used to compensate for the imprecision of the calendar update frequency (1 Hz).

Each 1 Hz clock edge is compared to the nearest reference clock edge (if one is found within a given time window). In most cases, the two clock edges are properly aligned. When the 1 Hz clock becomes misaligned due to the imprecision of the LSE clock, the RTC shifts the 1 Hz clock a bit so that future 1 Hz clock edges are aligned. Thanks to this mechanism, the calendar becomes as precise as the reference clock.

The RTC detects if the reference clock source is present by using the 256 Hz clock (ck_apre) generated from the 32.768 kHz quartz. The detection is performed during a time window around each of the calendar updates (every 1 s). The window equals 7 ck_apre periods when detecting the first reference clock edge. A smaller window of 3 ck_apre periods is used for subsequent calendar updates.

Each time the reference clock is detected in the window, the synchronous prescaler which outputs the ck_spre clock is forced to reload. This has no effect when the reference clock and the 1 Hz clock are aligned because the prescaler is being reloaded at the same moment. When the clocks are not aligned, the reload shifts future 1 Hz clock edges a little for them to be aligned with the reference clock.

If the reference clock halts (no reference clock edge occurred during the 3 ck_apre window), the calendar is updated continuously based solely on the LSE clock. The RTC then waits for the reference clock using a large 7 ck_apre period detection window centered on the ck_spre edge.

When the reference clock detection is enabled, PREDIV_A and PREDIV_S must be set to their default values:

- PREDIV_A = 0x007F
- PREDIV_S = 0x00FF

Note: The reference clock detection is not available in Standby mode.

Caution: The reference clock detection feature cannot be used in conjunction with the coarse digital calibration: RTC_CALIBR must be kept at 0x0000 0000 when REFCKON=1.

26.3.10 RTC coarse digital calibration

Two digital calibration methods are available: coarse and smooth calibration. To perform coarse calibration refer to *Section 26.6.7: RTC calibration register (RTC_CALIBR)*.

The two calibration methods are not intended to be used together, the application must select one of the two methods. Coarse calibration is provided for compatibly reasons. To perform smooth calibration refer to *Section 26.3.11: RTC smooth digital calibration* and the *Section 26.6.16: RTC calibration register (RTC_CALR)*

The coarse digital calibration can be used to compensate crystal inaccuracy by adding (positive calibration) or masking (negative calibration) clock cycles at the output of the asynchronous prescaler (ck_apre).

Positive and negative calibration are selected by setting the DCS bit in RTC_CALIBR register to ‘0’ and ‘1’, respectively.

When positive calibration is enabled (DCS = ‘0’), 2 ck_apre cycles are added every minute (around 15360 ck_apre cycles) for 2xDC minutes. This causes the calendar to be updated sooner, thereby adjusting the effective RTC frequency to be a bit higher.

When negative calibration is enabled (DCS = ‘1’), 1 ck_apre cycle is removed every minute (around 15360 ck_apre cycles) for 2xDC minutes. This causes the calendar to be updated later, thereby adjusting the effective RTC frequency to be a bit lower.

DC is configured through bits DC[4:0] of RTC_CALIBR register. This number ranges from 0 to 31 corresponding to a time interval (2xDC) ranging from 0 to 62.

The coarse digital calibration can be configured only in initialization mode, and starts when the INIT bit is cleared. The full calibration cycle lasts 64 minutes. The first 2xDC minutes of the 64 -minute cycle are modified as just described.

Negative calibration can be performed with a resolution of about 2 ppm while positive calibration can be performed with a resolution of about 4 ppm. The maximum calibration ranges from -63 ppm to 126 ppm.

The calibration can be performed either on the LSE or on the HSE clock.

Caution: Digital calibration may not work correctly if PREDIV_A < 6.

Case of RTCCLK=32.768 kHz and PREDIV_A+1=128

The following description assumes that ck_apre frequency is 256 Hz obtained with an LSE clock nominal frequency of 32.768 kHz, and PREDIV_A set to 127 (default value).

The ck_spre clock frequency is only modified during the first 2xDC minutes of the 64-minute cycle. For example, when DC equals 1, only the first 2 minutes are modified. This means that the first 2xDC minutes of each 64-minute cycle have, once per minute, one second

either shortened by 256 or lengthened by 128 RTCCLK cycles, given that each ck_apre cycle represents 128 RTCCLK cycles (with PREDIV_A+1=128).

Therefore each calibration step has the effect of adding 512 or subtracting 256 oscillator cycles for every 125829120 RTCCLK cycles (64min x 60 s/min x 32768 cycles/s). This is equivalent to +4.069 ppm or -2.035 ppm per calibration step. As a result, the calibration resolution is +10.5 or -5.27 seconds per month, and the total calibration ranges from +5.45 to -2.72 minutes per month.

In order to measure the clock deviation, a 512 Hz clock is output for calibration.Refer to *Section 26.3.14: Calibration clock output*.

26.3.11 RTC smooth digital calibration

RTC frequency can be digitally calibrated with a resolution of about 0.954 ppm with a range from -487.1 ppm to +488.5 ppm. The correction of the frequency is performed using series of small adjustments (adding and/or subtracting individual RTCCLK pulses). These adjustments are fairly well distributed so that the RTC is well calibrated even when observed over short durations of time.

The smooth digital calibration is performed during a cycle of about 2^{20} RTCCLK pulses, or 32 seconds when the input frequency is 32768 Hz. This cycle is maintained by a 20-bit counter, cal_cnt[19:0], clocked by RTCCLK.

The smooth calibration register (RTC_CALR) specifies the number of RTCCLK clock cycles to be masked during the 32-second cycle:

- Setting the bit CALM[0] to 1 causes exactly one pulse to be masked during the 32-second cycle.
- Setting CALM[1] to 1 causes two additional cycles to be masked
- Setting CALM[2] to 1 causes four additional cycles to be masked
- and so on up to CALM[8] set to 1 which causes 256 clocks to be masked.

Note: CALM[8:0] (RTC_CALRx) specifies the number of RTCCLK pulses to be masked during the 32-second cycle. Setting the bit CALM[0] to '1' causes exactly one pulse to be masked during the 32-second cycle at the moment when cal_cnt[19:0] is 0x80000; CALM[1]=1 causes two other cycles to be masked (when cal_cnt is 0x40000 and 0xC0000); CALM[2]=1 causes four other cycles to be masked (cal_cnt = 0x20000/0x60000/0xA0000/ 0xE0000); and so on up to CALM[8]=1 which causes 256 clocks to be masked (cal_cnt = 0xXX800).

While CALM allows the RTC frequency to be reduced by up to 487.1 ppm with fine resolution, the bit CALP can be used to increase the frequency by 488.5 ppm. Setting CALP to '1' effectively inserts an extra RTCCLK pulse every 2^{11} RTCCLK cycles, which means that 512 clocks are added during every 32-second cycle.

Using CALM together with CALP, an offset ranging from -511 to +512 RTCCLK cycles can be added during the 32-second cycle, which translates to a calibration range of -487.1 ppm to +488.5 ppm with a resolution of about 0.954 ppm.

The formula to calculate the effective calibrated frequency (F_{CAL}) given the input frequency (F_{RTCCLK}) is as follows:

$$F_{CAL} = F_{RTCCLK} \times [1 + (CALP \times 512 - CALM) / (2^{20} + CALM - CALP \times 512)]$$

Calibration when PREDIV_A<3

The CALP bit can not be set to 1 when the asynchronous prescaler value (PREDIV_A bits in RTC_PRER register) is less than 3. If CALP was already set to 1 and PREDIV_A bits are

set to a value less than 3, CALP is ignored and the calibration operates as if CALP was equal to 0.

To perform a calibration with PREDIV_A less than 3, the synchronous prescaler value (PREDIV_S) should be reduced so that each second is accelerated by 8 RTCCLK clock cycles, which is equivalent to adding 256 clock cycles every 32 seconds. As a result, between 255 and 256 clock pulses (corresponding to a calibration range from 243.3 to 244.1 ppm) can effectively be added during each 32-second cycle using only the CALM bits.

With a nominal RTCCLK frequency of 32768 Hz, when PREDIV_A equals 1 (division factor of 2), PREDIV_S should be set to 16379 rather than 16383 (4 less). The only other interesting case is when PREDIV_A equals 0, PREDIV_S should be set to 32759 rather than 32767 (8 less).

If PREDIV_S is reduced in this way, the formula given the effective frequency of the

calibrated input clock is as follows:

$F_{CAL} = F_{RTCCLK} \times [1 + (256 - CALM) / (2^{20} + CALM - 256)]$

In this case, CALM[7:0] equals 0x100 (the midpoint of the CALM range) is the correct setting if RTCCLK is exactly 32768.00 Hz.

Verifying the RTC calibration

RTC precision is performed by measuring the precise frequency of RTCCLK and calculating the correct CALM value and CALP values. An optional 1 Hz output is provided to allow applications to measure and verify the RTC precision.

Measuring the precise frequency of the RTC over a limited interval can result in a measurement error of up to 2 RTCCLK clock cycles over the measurement period, depending on how the digital calibration cycle is aligned with the measurement period.

However, this measurement error can be eliminated if the measurement period is the same length as the calibration cycle period. In this case, the only error observed is the error due to the resolution of the digital calibration.

- By default, the calibration cycle period is 32 seconds.

  Using this mode and measuring the accuracy of the 1 Hz output over exactly 32 seconds guarantees that the measure is within 0.477 ppm (0.5 RTCCLK cycles over 32 seconds, due to the limitation of the calibration resolution).
- CALW16 bit of the RTC_CALR register can be set to 1 to force a 16- second calibration cycle period.

  In this case, the RTC precision can be measured during 16 seconds with a maximum error of 0.954 ppm (0.5 RTCCLK cycles over 16 seconds). However, since the calibration resolution is reduced, the long term RTC precision is also reduced to 0.954 ppm: CALM[0] bit is stuck at 0 when CALW16 is set to 1.
- CALW8 bit of the RTC_CALR register can be set to 1 to force a 8- second calibration cycle period.

  In this case, the RTC precision can be measured during 8 seconds with a maximum error of 1.907 ppm (0.5 RTCCLK cycles over 8s). The long term RTC precision is also reduced to 1.907 ppm: CALM[1:0] bits are stuck at 00 when CALW8 is set to 1.

Re-calibration on-the-fly

The calibration register (RTC_CALR) can be updated on-the-fly while RTC_ISR/INITF=0, by using the follow process:

1. Poll the RTC_ISR/RECALPF (re-calibration pending flag).
2. If it is set to 0, write a new value to RTC_CALR, if necessary. RECALPF is then automatically set to 1
3. Within three ck_apre cycles after the write operation to RTC_CALR, the new calibration settings take effect.

26.3.12 Timestamp function

Timestamp is enabled by setting the TSE bit of RTC_CR register to 1.

The calendar is saved in the timestamp registers (RTC_TSSSR, RTC_TSTR, RTC_TSDR) when a timestamp event is detected on the pin to which the TIMESTAMP alternate function is mapped. When a timestamp event occurs, the timestamp flag bit (TSF) in RTC_ISR register is set.

By setting the TSIE bit in the RTC_CR register, an interrupt is generated when a timestamp event occurs.

If a new timestamp event is detected while the timestamp flag (TSF) is already set, the timestamp overflow flag (TSOVF) flag is set and the timestamp registers (RTC_TSTR and RTC_TSDR) maintain the results of the previous event.

Note: TSF is set 2 ck_apre cycles after the timestamp event occurs due to synchronization process.

There is no delay in the setting of TSOVF. This means that if two timestamp events are close together, TSOVF can be seen as '1' while TSF is still '0'. As a consequence, it is recommended to poll TSOVF only after TSF has been set.

Caution: If a timestamp event occurs immediately after the TSF bit is supposed to be cleared, then both TSF and TSOVF bits are set. To avoid masking a timestamp event occurring at the same moment, the application must not write ‘0’ into TSF bit unless it has already read it to ‘1’.

Optionally, a tamper event can cause a timestamp to be recorded. See the description of the TAMPTS control bit in *Section 26.6.17: RTC tamper and alternate function configuration register (RTC_TAFCR)*. If the timestamp event is on the same pin as a tamper event configured in filtered mode (TAMPFLT set to a non-zero value), the timestamp on tamper detection event mode must be selected by setting TAMPTS='1' in RTC_TAFCR register.

TIMESTAMP alternate function

The TIMESTAMP alternate function (RTC_TS) can be mapped either to RTC_AF1 or to RTC_AF2 depending on the value of the TSINSEL bit in the RTC_TAFCR register (see *Section 26.6.17: RTC tamper and alternate function configuration register (RTC_TAFCR)*). Mapping the timestamp event on RTC_AF2 is not allowed if RTC_AF1 is used as TAMPER in filtered mode (TAMPFLT set to a non-zero value).

26.3.13 Tamper detection

Two tamper detection inputs are available. They can be configured either for edge detection, or for level detection with filtering.

RTC backup registers

The backup registers (RTC_BKPxR) are twenty 32-bit registers for storing 80 bytes of user application data. They are implemented in the backup domain that remains powered-on by

V_{BAT} when the V_{DD} power is switched off. They are not reset by system reset or when the device wakes up from Standby mode. They are reset by a backup domain reset

The backup registers are reset when a tamper detection event occurs (see *Section 26.6.20: RTC backup registers (RTC_BKPxR)* and *Tamper detection initialization on page 812*.

Tamper detection initialization

Each tamper detection input is associated with the TAMP1F/TAMP2F flags in the RTC_ISR2 register. Each input can be enabled by setting the corresponding TAMP1E/TAMP2E bits to 1 in the RTC_TAFCR register.

A tamper detection event resets all backup registers (RTC_BKPxR).

By setting the TAMPIE bit in the RTC_TAFCR register, an interrupt is generated when a tamper detection event occurs.

Timestamp on tamper event

With TAMPTS set to ‘1 , any tamper event causes a timestamp to occur. In this case, either the TSF bit or the TSOVF bit are set in RTC_ISR, in the same manner as if a normal timestamp event occurs. The affected tamper flag register (TAMP1F, TAMP2F) is set at the same time that TSF or TSOVF is set.

Edge detection on tamper inputs

If the TAMPFLT bits are “00”, the TAMPER pins generate tamper detection events (RTC_TAMP[2:1]) when either a rising edge is observed or an falling edge is observed depending on the corresponding TAMPxTRG bit. The internal pull-up resistors on the TAMPER inputs are deactivated when edge detection is selected.

Caution: To avoid losing tamper detection events, the signal used for edge detection is logically ANDed with TAMPxE in order to detect a tamper detection event in case it occurs before the TAMPERx pin is enabled.

- When TAMPxTRG = 0: if the TAMPERx alternate function is already high before tamper detection is enabled (TAMPxE bit set to 1), a tamper event is detected as soon as TAMPERx is enabled, even if there was no rising edge on TAMPERx after TAMPxE was set.
- When TAMPxTRG = 1: if the TAMPERx alternate function is already low before tamper detection is enabled, a tamper event is detected as soon as TAMPERx is enabled (even if there was no falling edge on TAMPERx after TAMPxE was set.

After a tamper event has been detected and cleared, the TAMPERx alternate function should be disabled and then re-enabled (TAMPxE set to 1) before re-programming the backup registers (RTC_BKPxR). This prevents the application from writing to the backup registers while the TAMPERx value still indicates a tamper detection. This is equivalent to a level detection on the TAMPERx alternate function.

Note: Tamper detection is still active when V_{DD} power is switched off. To avoid unwanted resetting of the backup registers, the pin to which the TAMPER alternate function is mapped should be externally tied to the correct level.

Level detection with filtering on tamper inputs

Level detection with filtering is performed by setting TAMPFLT to a non-zero value. A tamper detection event is generated when either 2, 4, or 8 (depending on TAMPFLT) consecutive

samples are observed at the level designated by the TAMPxTRG bits (TAMP1TRG/TAMP2TRG).

The TAMPER inputs are pre-charged through the I/O internal pull-up resistance before its state is sampled, unless disabled by setting TAMPPUDIS to 1,The duration of the precharge is determined by the TAMPPRCH bits, allowing for larger capacitances on the tamper inputs.

The trade-off between tamper detection latency and power consumption through the pull-up can be optimized by using TAMPFREQ to determine the frequency of the sampling for level detection.

Note: Refer to the datasheets for the electrical characteristics of the pull-up resistors.

TAMPER alternate function detection

The TAMPER1 alternate function (RTC_TAMP1) can be mapped either to RTC_AF1(PC13) or RTC_AF2 (PI8) depending on the value of TAMP1INSEL bit in RTC_TAFCR register (see *Section 26.6.17: RTC tamper and alternate function configuration register (RTC_TAFCR)*). TAMPE bit must be cleared when TAMP1INSEL is modified to avoid unwanted setting of TAMPF.

The TAMPER 2 alternate function corresponds to RTC_TAMP2 pin.

26.3.14 Calibration clock output

When the COE bit is set to 1 in the RTC_CR register, a reference clock is provided on the RTC_CALIB device output. If the COSEL bit in the RTC_CR register is reset and PREDIV_A = 0x7F, the RTC_CALIB frequency is $f_{RTCCLK/64}$. This corresponds to a calibration output at 512 Hz for an RTCCLK frequency at 32.768 kHz.

The RTC_CALIB output is not impacted by the calibration value programmed in RTC_CALIBR register. The RTC_CALIB duty cycle is irregular: there is a light jitter on falling edges. It is therefore recommended to use rising edges.

If COSEL is set and (PREDIV_S+1) is a non-zero multiple of 256 (i.e: PREDIV_S[7:0] = 0xFF), the RTC_CALIB frequency is $f_{RTCCLK}/(256 * (PREDIV_A+1))$. This corresponds to a calibration output at 1 Hz for prescaler default values (PREDIV_A = 0x7F, PREDIV_S = 0xFF), with an RTCCLK frequency at 32.768 kHz. The 1 Hz output is affected when a shift operation is on going and may toggle during the shift operation (SHPF=1).

Calibration alternate function output

When the COE bit in the RTC_CR register is set to 1, the calibration alternate function (RTC_CALIB) is enabled on RTC_AF1.

Note: When RTC_CALIB *or* RTC_ALARM *is selected,* RTC_AF1 *is automatically configured in output alternate function.*

26.3.15 Alarm output

Three functions can be selected on Alarm output: ALRAF, ALRBF and WUTF. These functions reflect the contents of the corresponding flags in the RTC_ISR register.

The OSEL[1:0] control bits in the RTC_CR register are used to activate the alarm alternate function output (RTC_ALARM) in RTC_AF1, and to select the function which is output on RTC_ALARM.

The polarity of the output is determined by the POL control bit in RTC_CR so that the opposite of the selected flag bit is output when POL is set to 1.

Alarm alternate function output

RTC_ALARM can be configured in output open drain or output push-pull using the control bit ALARMOUTTYPE in the RTC_TAFCR register.

Note: *Once* RTC_ALARM *is enabled, it has priority over* RTC_CALIB *(*COE *bit is don't care on* RTC_AF1*).*

When RTC_CALIB *or* RTC_ALARM *is selected,* RTC_AF1 *is automatically configured in output alternate function.*

26.4 RTC and low-power modes

Table 119. Effect of low-power modes on RTC

Mode	Description
Sleep	No effect RTC interrupts cause the device to exit the Sleep mode.
Stop	The RTC remains active when the RTC clock source is LSE or LSI. RTC alarm, RTC tamper event, RTC time stamp event, and RTC Wakeup cause the device to exit the Stop mode.
Standby	The RTC remains active when the RTC clock source is LSE or LSI. RTC alarm, RTC tamper event, RTC time stamp event, and RTC Wakeup cause the device to exit the Standby mode.

26.5 RTC interrupts

All RTC interrupts are connected to the EXTI controller.

To enable the RTC Alarm interrupt, the following sequence is required:

1. Configure and enable the EXTI Line 17 in interrupt mode and select the rising edge sensitivity.
2. Configure and enable the RTC_Alarm IRQ channel in the NVIC.
3. Configure the RTC to generate RTC alarms (Alarm A or Alarm B).

To enable the RTC Wakeup interrupt, the following sequence is required:

1. Configure and enable the EXTI Line 22 in interrupt mode and select the rising edge sensitivity.
2. Configure and enable the RTC_WKUP IRQ channel in the NVIC.
3. Configure the RTC to generate the RTC wakeup timer event.

To enable the RTC Tamper interrupt, the following sequence is required:

1. Configure and enable the EXTI Line 21 in interrupt mode and select the rising edge sensitivity.
2. Configure and Enable the TAMP_STAMP IRQ channel in the NVIC.
3. Configure the RTC to detect the RTC tamper event.

To enable the RTC TimeStamp interrupt, the following sequence is required:

1. Configure and enable the EXTI Line 21 in interrupt mode and select the rising edge sensitivity.
2. Configure and Enable the TAMP_STAMP IRQ channel in the NVIC.
3. Configure the RTC to detect the RTC timestamp event.

Table 120. Interrupt control bits

Interrupt event	Event flag	Enable control bit	Exit the Sleep mode	Exit the Stop mode	Exit the Standby mode
Alarm A	ALRAF	ALRAIE	yes	yes(1)	yes(1)
Alarm B	ALRBF	ALRBIE	yes	yes(1)	yes(1)
Wakeup	WUTF	WUTIE	yes	yes(1)	yes(1)
TimeStamp	TSF	TSIE	yes	yes(1)	yes(1)
Tamper1 detection	TAMP1F	TAMPIE	yes	yes(1)	yes(1)
Tamper2 detection(2)	TAMP2F	TAMPIE	yes	yes(1)	yes(1)

1. Wakeup from STOP and Standby modes is possible only when the RTC clock source is LSE or LSI.
2. If RTC_TAMPER2 pin is present. Refer to device datasheet pinout.

26.6 RTC registers

Refer to *Section 1.1: List of abbreviations for registers for registers* for a list of abbreviations used in register descriptions.

The peripheral registers have to be accessed by words (32 bits).

26.6.1 RTC time register (RTC_TR)

The RTC_TR is the calendar time shadow register. This register must be written in initialization mode only. Refer to *Calendar initialization and configuration on page 804* and *Reading the calendar on page 805*.

Address offset: 0x00

Backup domain reset value: 0x0000 0000

System reset: 0x0000 0000 when BYPSHAD = 0. Not affected when BYPSHAD = 1.

31	30	29	28	27	26	25	24	23	22	21	20	19	18	17	16
Reserved									PM	HT[1:0]		HU[3:0]			
									rw	rw	rw	rw	rw	rw	rw

15	14	13	12	11	10	9	8	7	6	5	4	3	2	1	0
Res.	MNT[2:0]			MNU[3:0]				Res.	ST[2:0]			SU[3:0]			
	rw	rw	rw	rw	rw	rw	rw		rw	rw	rw	rw	rw	rw	rw

Bits 31-24 Reserved

Bit 23 Reserved, must be kept at reset value.

Bit 22 **PM**: AM/PM notation
0: AM or 24-hour format
1: PM

Bits 21:20 **HT[1:0]**: Hour tens in BCD format

Bits 19:16 **HU[3:0]**: Hour units in BCD format

Bit 15 Reserved, must be kept at reset value.

Bits 14:12 **MNT[2:0]**: Minute tens in BCD format

Bit 11:8 **MNU[3:0]**: Minute units in BCD format

Bit 7 Reserved, must be kept at reset value.

Bits 6:4 **ST[2:0]**: Second tens in BCD format

Bits 3:0 **SU[3:0]**: Second units in BCD format

Note: This register is write protected. The write access procedure is described in RTC register write protection on page 803.

26.6.2 RTC date register (RTC_DR)

The RTC_DR is the calendar date shadow register. This register must be written in initialization mode only. Refer to *Calendar initialization and configuration on page 804* and *Reading the calendar on page 805*.

Address offset: 0x04

Backup domain reset value: 0x0000 2101

System reset: 0x0000 2101 when BYPSHAD = 0. Not affected when BYPSHAD = 1.

31	30	29	28	27	26	25	24	23	22	21	20	19	18	17	16
Reserved								YT[3:0]				YU[3:0]			
								rw	rw	rw	rw	rw	rw	rw	rw

15	14	13	12	11	10	9	8	7	6	5	4	3	2	1	0
WDU[2:0]			MT	MU[3:0]				Reserved		DT[1:0]		DU[3:0]			
rw	rw	rw	rw	rw	rw	rw	rw			rw	rw	rw	rw	rw	rw

Bits 31-24 Reserved

Bits 23:20 **YT[3:0]**: Year tens in BCD format

Bits 19:16 **YU[3:0]**: Year units in BCD format

Bits 15:13 **WDU[2:0]**: Week day units
000: forbidden
001: Monday
...
111: Sunday

Bit 12 **MT**: Month tens in BCD format

Bits 11:8 **MU**: Month units in BCD format

Bits 7:6 Reserved, must be kept at reset value.

Bits 5:4 **DT[1:0]**: Date tens in BCD format

Bits 3:0 **DU[3:0]**: Date units in BCD format

Note: This register is write protected. The write access procedure is described in RTC register write protection on page 803.

26.6.3 RTC control register (RTC_CR)

Address offset: 0x08

Backup domain reset value: 0x0000 0000

System reset: not affected

31	30	29	28	27	26	25	24	23	22	21	20	19	18	17	16
Reserved								COE	OSEL[1:0]		POL	COSEL	BKP	SUB1H	ADD1H
								rw	rw	rw	rw	rw	rw	w	w
15	14	13	12	11	10	9	8	7	6	5	4	3	2	1	0
TSIE	WUTIE	ALRBIE	ALRAIE	TSE	WUTE	ALRBE	ALRAE	DCE	FMT	BYPS HAD	REFCKON	TSEDGE	WUCKSEL[2:0]		
rw	rw	rw	rw	rw	rw	rw	rw	rw	rw	rw	rw	rw	rw	rw	rw

Bits 31:24 Reserved, must be kept at reset value.

Bit 23 **COE**: Calibration output enable

This bit enables the RTC_CALIB output
0: Calibration output disabled
1: Calibration output enabled

Bits 22:21 **OSEL[1:0]**: Output selection

These bits are used to select the flag to be routed to RTC_ALARM output
00: Output disabled
01: Alarm A output enabled
10:Alarm B output enabled
11: Wakeup output enabled

Bit 20 **POL**: Output polarity

This bit is used to configure the polarity of RTC_ALARM output
0: The pin is high when ALRAF/ALRBF/WUTF is asserted (depending on OSEL[1:0])
1: The pin is low when ALRAF/ALRBF/WUTF is asserted (depending on OSEL[1:0]).

Bit 19 **COSEL**: Calibration output selection

When COE=1, this bit selects which signal is output on RTC_CALIB.
0: Calibration output is 512 Hz
1: Calibration output is 1 Hz
These frequencies are valid for RTCCLK at 32.768 kHz and prescalers at their default values (PREDIV_A=127 and PREDIV_S=255). Refer to *Section 26.3.14: Calibration clock output*

Bit 18 **BKP**: Backup

This bit can be written by the user to memorize whether the daylight saving time change has been performed or not.

Bit 17 **SUB1H**: Subtract 1 hour (winter time change)

When this bit is set outside initialization mode, 1 hour is subtracted to the calendar time if the current hour is not 0. This bit is always read as 0.
Setting this bit has no effect when current hour is 0.
0: No effect
1: Subtracts 1 hour to the current time. This can be used for winter time change.

Bit 16 **ADD1H**: Add 1 hour (summer time change)

When this bit is set, 1 hour is added to the calendar time. This bit is always read as 0.

0: No effect

1: Adds 1 hour to the current time. This can be used for summer time change outside initialization mode.

Bit 15 **TSIE**: Timestamp interrupt enable

0: Timestamp Interrupt disable

1: Timestamp Interrupt enable

Bit 14 **WUTIE**: Wakeup timer interrupt enable

0: Wakeup timer interrupt disabled

1: Wakeup timer interrupt enabled

Bit 13 **ALRBIE**: *Alarm B interrupt enable*

0: Alarm B Interrupt disable

1: Alarm B Interrupt enable

Bit 12 **ALRAIE**: Alarm A interrupt enable

0: Alarm A interrupt disabled

1: Alarm A interrupt enabled

Bit 11 **TSE**: Time stamp enable

0: Time stamp disable

1: Time stamp enable

Bit 10 **WUTE**: Wakeup timer enable

0: Wakeup timer disabled

1: Wakeup timer enabled

Note: When the wakeup timer is disabled, wait for WUTWF=1 before enabling it again.

Bit 9 **ALRBE**: *Alarm B enable*

0: Alarm B disabled

1: Alarm B enabled

Bit 8 **ALRAE:** Alarm A enable

0: Alarm A disabled

1: Alarm A enabled

Bit 7 **DCE:** Coarse digital calibration enable

0: Digital calibration disabled

1: Digital calibration enabled

PREDIV_A must be 6 or greater

Bit 6 **FMT**: Hour format

0: 24 hour/day format

1: AM/PM hour format

Bit 5 **BYPSHAD**: Bypass the shadow registers

0: Calendar values (when reading from RTC_SSR, RTC_TR, and RTC_DR) are taken from the shadow registers, which are updated once every two RTCCLK cycles.

1: Calendar values (when reading from RTC_SSR, RTC_TR, and RTC_DR) are taken directly from the calendar counters.

Note: If the frequency of the APB1 clock is less than seven times the frequency of RTCCLK, BYPSHAD must be set to '1'.

Bit 4 **REFCKON**: Reference clock detection enable (50 or 60 Hz)

0: Reference clock detection disabled
1: Reference clock detection enabled

Note: PREDIV_S must be 0x00FF.

Bit 3 **TSEDGE**: Timestamp event active edge

0: TIMESTAMP rising edge generates a timestamp event
1: TIMESTAMP falling edge generates a timestamp event
TSE must be reset when TSEDGE is changed to avoid unwanted TSF setting

Bits 2:0 **WUCKSEL[2:0]**: Wakeup clock selection

000: RTC/16 clock is selected
001: RTC/8 clock is selected
010: RTC/4 clock is selected
011: RTC/2 clock is selected
10x: ck_spre (usually 1 Hz) clock is selected
11x: ck_spre (usually 1 Hz) clock is selected and 2^{16} is added to the WUT counter value (see note below)

Note: WUT = Wakeup unit counter value. WUT = (0x0000 to 0xFFFF) + 0x10000 added when WUCKSEL[2:1 = 11].

Bits 7, 6 and 4 of this register can be written in initialization mode only (RTC_ISR/INITF = 1).

Bits 2 to 0 of this register can be written only when RTC_CR WUTE bit = 0 and RTC_ISR WUTWF bit = 1.

It is recommended not to change the hour during the calendar hour increment as it could mask the incrementation of the calendar hour.

ADD1H and SUB1H changes are effective in the next second.

To avoid spuriously setting of TSF, TSE must be reset when TSEDGE is changed.

This register is write protected. The write access procedure is described in RTC register write protection on page 803.

26.6.4 RTC initialization and status register (RTC_ISR)

Address offset: 0x0C

Backup domain reset value: 0x0000 0007

System reset value: Not affected except INIT, INITF and RSF which are cleared to 0.

31	30	29	28	27	26	25	24	23	22	21	20	19	18	17	16
Reserved															RECALPF
															r
15	14	13	12	11	10	9	8	7	6	5	4	3	2	1	0
Res.	TAMP2F	TAMP1F	TSOVF	TSF	WUTF	ALRBF	ALRAF	INIT	INITF	RSF	INITS	SHPF	WUTWF	ALRBWF	ALRAWF
	rc_w0	rc_w0	rc_w0	rc_w0	rc_w0	rc_w0	rc_w0	rw	r	rc_w0	r	r	r	r	r

Bits 31:17 Reserved

Bit 16 **RECALPF**: Recalibration pending Flag

The RECALPF status flag is automatically set to ‘1’ when software writes to the RTC_CALR register, indicating that the RTC_CALR register is blocked. When the new calibration settings are taken into account, this bit returns to ‘0’. Refer to *Section : Re-calibration on-the-fly*.

Bit 15 Reserved, must be kept at reset value.

Bit 14 **TAMP2F**: TAMPER2 detection flag

This flag is set by hardware when a tamper detection event is detected on tamper input 2.
It is cleared by software writing 0.

Bit 13 **TAMP1F**: Tamper detection flag

This flag is set by hardware when a tamper detection event is detected.
It is cleared by software writing 0.

Bit 12 **TSOVF**: Timestamp overflow flag

This flag is set by hardware when a timestamp event occurs while TSF is already set.
This flag is cleared by software by writing 0. It is recommended to check and then clear TSOVF only after clearing the TSF bit. Otherwise, an overflow might not be noticed if a timestamp event occurs immediately before the TSF bit is cleared.

Bit 11 **TSF**: Timestamp flag

This flag is set by hardware when a timestamp event occurs.
This flag is cleared by software by writing 0.

Bit 10 **WUTF**: Wakeup timer flag

This flag is set by hardware when the wakeup auto-reload counter reaches 0.
This flag is cleared by software by writing 0.
This flag must be cleared by software at least 1.5 RTCCLK periods before WUTF is set to 1 again.

Bit 9 **ALRBF**: Alarm B flag

This flag is set by hardware when the time/date registers (RTC_TR and RTC_DR) match the Alarm B register (RTC_ALRMBR).
This flag is cleared by software by writing 0.

Bit 8 **ALRAF**: Alarm A flag

This flag is set by hardware when the time/date registers (RTC_TR and RTC_DR) match the Alarm A register (RTC_ALRMAR).
This flag is cleared by software by writing 0.

Bit 7 **INIT**: Initialization mode

0: Free running mode
1: Initialization mode used to program time and date register (RTC_TR and RTC_DR), and prescaler register (RTC_PRER). Counters are stopped and start counting from the new value when INIT is reset.

Bit 6 **INITF**: Initialization flag

When this bit is set to 1, the RTC is in initialization state, and the time, date and prescaler registers can be updated.
0: Calendar registers update is not allowed
1: Calendar registers update is allowed.

Bit 5 **RSF**: Registers synchronization flag

This bit is set by hardware each time the calendar registers are copied into the shadow registers (RTC_SSRx, RTC_TRx and RTC_DRx). This bit is cleared by hardware in initialization mode, while a shift operation is pending (SHPF=1), or when in bypass shadow register mode (BYPSHAD=1). This bit can also be cleared by software.

0: Calendar shadow registers not yet synchronized

1: Calendar shadow registers synchronized

Bit 4 **INITS**: Initialization status flag

This bit is set by hardware when the calendar year field is different from 0 (backup domain reset value state).

0: Calendar has not been initialized

1: Calendar has been initialized

Bit 3 **SHPF**: Shift operation pending

0: No shift operation is pending

1: A shift operation is pending

This flag is set by hardware as soon as a shift operation is initiated by a write to the RTC_SHIFTR. It is cleared by hardware when the corresponding shift operation has been executed. Writing to SHPF has no effect.

Bit 2 **WUTWF**: Wakeup timer write flag

This bit is set by hardware up to 2 RTCCLK cycles after the WUTE bit has been set to 0 in RTC_CR, and is cleared up to 2 RTCCLK cycles after the WUTE bit has been set to 1. The wakeup timer values can be changed when WUTE bit is cleared and WUTWF is set.

0: Wakeup timer configuration update not allowed

1: Wakeup timer configuration update allowed

Bit 1 **ALRBWF**: Alarm B write flag

This bit is set by hardware when Alarm B values can be changed, after the ALRBIE bit has been set to 0 in RTC_CR.

It is cleared by hardware in initialization mode.

0: Alarm B update not allowed

1: Alarm B update allowed.

Bit 0 **ALRAWF**: Alarm A write flag

This bit is set by hardware when Alarm A values can be changed, after the ALRAE bit has been set to 0 in RTC_CR.

It is cleared by hardware in initialization mode.

0: Alarm A update not allowed

1: Alarm A update allowed

Note: The ALRAF, ALRBF, WUTF and TSF bits are cleared 2 APB clock cycles after programming them to 0.

This register is write protected (except for RTC_ISR[13:8] bits). The write access procedure is described in *RTC register write protection on page 803.*

26.6.5 RTC prescaler register (RTC_PRER)

Address offset: 0x10

Backup domain reset value: 0x007F 00FF

System reset: not affected

31	30	29	28	27	26	25	24	23	22	21	20	19	18	17	16
Reserved									PREDIV_A[6:0]						
									rw	rw	rw	rw	rw	rw	rw

15	14	13	12	11	10	9	8	7	6	5	4	3	2	1	0
Res.	PREDIV_S[14:0]														
	rw	rw	rw	rw	rw	rw	rw	rw	rw	rw	rw	rw	rw	rw	rw

Bits 31:24 Reserved

Bit 23 Reserved, must be kept at reset value.

Bits 22:16 **PREDIV_A[6:0]**: Asynchronous prescaler factor
This is the asynchronous division factor:
ck_apre frequency = RTCCLK frequency/(PREDIV_A+1)

Bit 15 Reserved, must be kept at reset value.

Bits 14:0 **PREDIV_S[14:0]**: Synchronous prescaler factor
This is the synchronous division factor:
ck_spre frequency = ck_apre frequency/(PREDIV_S+1)

Note: This register must be written in initialization mode only. The initialization must be performed in two separate write accesses. Refer to Calendar initialization and configuration on page 804

This register is write protected. The write access procedure is described in RTC register write protection on page 803.

26.6.6 RTC wakeup timer register (RTC_WUTR)

Address offset: 0x14

Backup domain reset value: 0x0000 FFFF

System reset: not affected

31	30	29	28	27	26	25	24	23	22	21	20	19	18	17	16
Reserved															

15	14	13	12	11	10	9	8	7	6	5	4	3	2	1	0
WUT[15:0]															
rw	rw	rw	rw	rw	rw	rw	rw	rw	rw	rw	rw	rw	rw	rw	rw

Bits 31:16 Reserved

Bits 15:0 **WUT[15:0]**: Wakeup auto-reload value bits

When the wakeup timer is enabled (WUTE set to 1), the WUTF flag is set every (WUT[15:0] + 1) ck_wut cycles. The ck_wut period is selected through WUCKSEL[2:0] bits of the RTC_CR register

When WUCKSEL[2] = 1, the wakeup timer becomes 17-bits and WUCKSEL[1] effectively becomes WUT[16] the most-significant bit to be reloaded into the timer.

Note: The first assertion of WUTF occurs (WUT+1) ck_wut cycles after WUTE is set. Setting WUT[15:0] to 0x0000 with WUCKSEL[2:0] =011 (RTCCLK/2) is forbidden.

Note: This register can be written only when WUTWF is set to 1 in RTC_ISR.

This register is write protected. The write access procedure is described in RTC register write protection on page 803.

26.6.7 RTC calibration register (RTC_CALIBR)

Address offset: 0x18

Backup domain reset value: 0x0000 0000

System reset: not affected

31	30	29	28	27	26	25	24	23	22	21	20	19	18	17	16
Reserved															

15	14	13	12	11	10	9	8	7	6	5	4	3	2	1	0
Reserved								DCS	Reserved		DC[4:0]				
								rw			rw	rw	rw	rw	rw

Bits 31:8 Reserved

Bit 7 **DCS**: Digital calibration sign

0: Positive calibration: calendar update frequency is increased
1: Negative calibration: calendar update frequency is decreased

Bits 6:5 Reserved, must be kept at reset value.

Bits 4:0 **DC[4:0]**: Digital calibration

DCS = 0 (positive calibration)
00000: + 0 ppm
00001: + 4 ppm (rounded value)
00010: + 8 ppm (rounded value)
..
11111: + 126 ppm (rounded value)
DCS = 1 (negative calibration)
00000: –0 ppm
00001: –2 ppm (rounded value)
00010: –4 ppm (rounded value)
..
11111: –63 ppm (rounded value)
Refer to *Case of RTCCLK=32.768 kHz and PREDIV_A+1=128 on page 808* for the exact step value.

Note: This register can be written in initialization mode only (RTC_ISR/INITF = '1').

This register is write protected. The write access procedure is described in RTC register write protection on page 803.

26.6.8 RTC alarm A register (RTC_ALRMAR)

Address offset: 0x1C

Backup domain reset value: 0x0000 0000

System reset: not affected

31	30	29	28	27	26	25	24	23	22	21	20	19	18	17	16
MSK4	WDSEL	DT[1:0]		DU[3:0]				MSK3	PM	HT[1:0]		HU[3:0]			
rw	rw	rw	rw	rw	rw	rw	rw	rw	rw	rw	rw	rw	rw	rw	rw
15	14	13	12	11	10	9	8	7	6	5	4	3	2	1	0
MSK2	MNT[2:0]			MNU[3:0]				MSK1	ST[2:0]			SU[3:0]			
rw	rw	rw	rw	rw	rw	rw	rw	rw	rw	rw	rw	rw	rw	rw	rw

Bit 31 **MSK4**: Alarm A date mask
0: Alarm A set if the date/day match
1: Date/day don't care in Alarm A comparison

Bit 30 **WDSEL**: Week day selection
0: DU[3:0] represents the date units
1: DU[3:0] represents the week day. DT[1:0] is don't care.

Bits 29:28 **DT[1:0]**: Date tens in BCD format.

Bits 27:24 **DU[3:0]**: Date units or day in BCD format.

Bit 23 **MSK3**: Alarm A hours mask
0: Alarm A set if the hours match
1: Hours don't care in Alarm A comparison

Bit 22 **PM:** AM/PM notation
0: AM or 24-hour format
1: PM

Bits 21:20 **HT[1:0]**: Hour tens in BCD format.

Bits 19:16 **HU[3:0]**: Hour units in BCD format.

Bit 15 **MSK2**: Alarm A minutes mask
0: Alarm A set if the minutes match
1: Minutes don't care in Alarm A comparison

Bits 14:12 **MNT[2:0]**: Minute tens in BCD format.

Bits 11:8 **MNU[3:0]**: Minute units in BCD format.

Bit 7 **MSK1**: Alarm A seconds mask
0: Alarm A set if the seconds match
1: Seconds don't care in Alarm A comparison

Bits 6:4 **ST[2:0]**: Second tens in BCD format.

Bits 3:0 **SU[3:0]**: Second units in BCD format.

Note: This register can be written only when ALRAWF is set to 1 in RTC_ISR, or in initialization mode.

This register is write protected. The write access procedure is described in RTC register write protection on page 803.

26.6.9 RTC alarm B register (RTC_ALRMBR)

Address offset: 0x20

Backup domain reset value: 0x0000 0000

System reset: not affected

31	30	29	28	27	26	25	24	23	22	21	20	19	18	17	16
MSK4	WDSEL	DT[1:0]		DU[3:0]				MSK3	PM	HT[1:0]		HU[3:0]			
rw	rw	rw	rw	rw	rw	rw	rw	rw	rw	rw	rw	rw	rw	rw	rw

15	14	13	12	11	10	9	8	7	6	5	4	3	2	1	0
MSK2	MNT[2:0]			MNU[3:0]				MSK1	ST[2:0]			SU[3:0]			
rw	rw	rw	rw	rw	rw	rw	rw	rw	rw	rw	rw	rw	rw	rw	rw

Bit 31 **MSK4**: Alarm B date mask
0: Alarm B set if the date and day match
1: Date and day don't care in Alarm B comparison

Bit 30 **WDSEL**: Week day selection
0: DU[3:0] represents the date units
1: DU[3:0] represents the week day. DT[1:0] is don't care.

Bits 29:28 **DT[1:0]**: Date tens in BCD format

Bits 27:24 **DU[3:0]**: Date units or day in BCD format

Bit 23 **MSK3**: Alarm B hours mask
0: Alarm B set if the hours match
1: Hours don't care in Alarm B comparison

Bit 22 **PM:** AM/PM notation
0: AM or 24-hour format
1: PM

Bits 21:20 **HT[1:0]**: Hour tens in BCD format

Bits 19:16 **HU[3:0]**: Hour units in BCD format

Bit 15 **MSK2**: Alarm B minutes mask
0: Alarm B set if the minutes match
1: Minutes don't care in Alarm B comparison

Bits 14:12 **MNT[2:0]**: Minute tens in BCD format

Bits 11:8 **MNU[3:0]**: Minute units in BCD format

Bit 7 **MSK1**: Alarm B seconds mask
0: Alarm B set if the seconds match
1: Seconds don't care in Alarm B comparison

Bits 6:4 **ST[2:0]**: Second tens in BCD format

Bits 3:0 **SU[3:0]**: Second units in BCD format

Note: This register can be written only when ALRBWF is set to 1 in RTC_ISR, or in initialization mode.

This register is write protected. The write access procedure is described in RTC register write protection on page 803.

26.6.10 RTC write protection register (RTC_WPR)

Address offset: 0x24

Backup domain reset value: 0x0000 0000

31	30	29	28	27	26	25	24	23	22	21	20	19	18	17	16
Reserved															
15	14	13	12	11	10	9	8	7	6	5	4	3	2	1	0
Reserved								KEY							
								w	w	w	w	w	w	w	w

Bits 31:8 Reserved, must be kept at reset value.

Bits 7:0 **KEY**: Write protection key

This byte is written by software.

Reading this byte always returns 0x00.

Refer to *RTC register write protection* for a description of how to unlock RTC register write protection.

26.6.11 RTC sub second register (RTC_SSR)

Address offset: 0x28

Backup domain reset value: 0x0000 0000

System reset: 0x0000 0000 when BYPSHAD = 0. Not affected when BYPSHAD = 1.

31	30	29	28	27	26	25	24	23	22	21	20	19	18	17	16
Reserved															
r	r	r	r	r	r	r	r	r	r	r	r	r	r	r	r

15	14	13	12	11	10	9	8	7	6	5	4	3	2	1	0
SS[15:0]															
r	r	r	r	r	r	r	r	r	r	r	r	r	r	r	r

Bits 31:16 Reserved

Bits 15:0 **SS**: Sub second value

SS[15:0] is the value in the synchronous prescaler's counter. The fraction of a second is given by the formula below:

Second fraction = (PREDIV_S - SS) / (PREDIV_S + 1)

Note: SS can be larger than PREDIV_S only after a shift operation. In that case, the correct time/date is one second less than as indicated by RTC_TR/RTC_DR.

26.6.12 RTC shift control register (RTC_SHIFTR)

Address offset: 0x2C

Backup domain reset value: 0x0000 0000

System reset: not affected

31	30	29	28	27	26	25	24	23	22	21	20	19	18	17	16
ADD1S	Reserved														
w	r	r	r	r	r	r	r	r	r	r	r	r	r	r	r

15	14	13	12	11	10	9	8	7	6	5	4	3	2	1	0
Res.	SUBFS[14:0]														
r	w	w	w	w	w	w	w	w	w	w	w	w	w	w	w

Bit 31 **ADD1S**: Add one second

0: No effect

1: Add one second to the clock/calendar

This bit is write only and is always read as zero. Writing to this bit has no effect when a shift operation is pending (when SHPF=1, in RTC_ISR).

This function is intended to be used with SUBFS (see description below) in order to effectively add a fraction of a second to the clock in an atomic operation.

Bits 30:15 Reserved

Bits 14:0 **SUBFS**: Subtract a fraction of a second

These bits are write only and is always read as zero. Writing to this bit has no effect when a shift operation is pending (when SHPF=1, in RTC_ISR).

The value which is written to SUBFS is added to the synchronous prescaler's counter. Since this counter counts down, this operation effectively subtracts from (delays) the clock by:

Delay (seconds) = SUBFS / (PREDIV_S + 1)

A fraction of a second can effectively be added to the clock (advancing the clock) when the ADD1S function is used in conjunction with SUBFS, effectively advancing the clock by:

Advance (seconds) = (1 - (SUBFS / (PREDIV_S + 1))) .

Note: Writing to SUBFS causes RSF to be cleared. Software can then wait until RSF=1 to be sure that the shadow registers have been updated with the shifted time.

Refer to *Section 26.3.8: RTC synchronization*.

Note: This register is write protected. The write access procedure is described in RTC register write protection on page 803

26.6.13 RTC time stamp time register (RTC_TSTR)

Address offset: 0x30

Backup domain reset value: 0x0000 0000

System reset: not affected

31	30	29	28	27	26	25	24	23	22	21	20	19	18	17	16
Reserved									PM	HT[1:0]		HU[3:0]			
									r	r	r	r	r	r	r

15	14	13	12	11	10	9	8	7	6	5	4	3	2	1	0
Res.	MNT[2:0]			MNU[3:0]				Res.	ST[2:0]			SU[3:0]			
	r	r	r	r	r	r	r		r	r	r	r	r	r	r

Bits 31:23 Reserved, must be kept at reset value.

Bit 22 **PM:** AM/PM notation
0: AM or 24-hour format
1: PM

Bits 21:20 **HT[1:0]**: Hour tens in BCD format.

Bits 19:16 **HU[3:0]**: Hour units in BCD format.

Bit 15 Reserved, must be kept at reset value.

Bits 14:12 **MNT[2:0]**: Minute tens in BCD format.

Bits 11:8 **MNU[3:0]**: Minute units in BCD format.

Bit 7 Reserved, must be kept at reset value.

Bits 6:4 **ST[2:0]**: Second tens in BCD format.

Bits 3:0 **SU[3:0]**: Second units in BCD format.

Note: The content of this register is valid only when TSF is set to 1 in RTC_ISR. It is cleared when TSF bit is reset.

26.6.14 RTC time stamp date register (RTC_TSDR)

Address offset: 0x34

Backup domain reset value: 0x0000 0000

System reset: not affected

31	30	29	28	27	26	25	24	23	22	21	20	19	18	17	16
Reserved															
15	14	13	12	11	10	9	8	7	6	5	4	3	2	1	0
WDU[1:0]			MT	MU[3:0]				Reserved		DT[1:0]		DU[3:0]			
r	r	r	r	r	r	r	r			r	r	r	r	r	r

Bits 31:16 Reserved, must be kept at reset value.

Bits 15:13 **WDU[1:0]**: Week day units

Bit 12 **MT**: Month tens in BCD format

Bits 11:8 **MU[3:0]**: Month units in BCD format

Bits 7:6 Reserved, must be kept at reset value.

Bits 5:4 **DT[1:0]**: Date tens in BCD format

Bit 3:0 **DU[3:0]**: Date units in BCD format

Note: The content of this register is valid only when TSF is set to 1 in RTC_ISR. It is cleared when TSF bit is reset.

26.6.15 RTC timestamp sub second register (RTC_TSSSR)

Address offset: 0x38

Backup domain reset value: 0x0000 0000

System reset: not affected

31	30	29	28	27	26	25	24	23	22	21	20	19	18	17	16
Reserved															
r	r	r	r	r	r	r	r	r	r	r	r	r	r	r	r

15	14	13	12	11	10	9	8	7	6	5	4	3	2	1	0
SS[15:0]															
r	r	r	r	r	r	r	r	r	r	r	r	r	r	r	r

Bits 31:16 Reserved

Bits 15:0 **SS**: Sub second value

SS[15:0] is the value of the synchronous prescaler's counter when the timestamp event occurred.

Note: The content of this register is valid only when RTC_ISR/TSF is set. It is cleared when the RTC_ISR/TSF bit is reset.

26.6.16 RTC calibration register (RTC_CALR)

Address offset: 0x3C

Backup domain reset value: 0x0000 0000

System reset: not affected

31	30	29	28	27	26	25	24	23	22	21	20	19	18	17	16
Reserved															
r	r	r	r	r	r	r	r	r	r	r	r	r	r	r	r

15	14	13	12	11	10	9	8	7	6	5	4	3	2	1	0
CALP	CALW8	CALW16	Reserved				CALM[8:0]								
rw	rw	rw	r	r	r	r	rw	rw	rw	rw	rw	rw	rw	rw	rw

Bits 31:16 Reserved

Bit 15 CALP: Increase frequency of RTC by 488.5 ppm

0: No RTCCLK pulses are added.

1: One RTCCLK pulse is effectively inserted every 2^{11} pulses (frequency increased by 488.5 ppm).

This feature is intended to be used in conjunction with CALM, which lowers the frequency of the calendar with a fine resolution. if the input frequency is 32768 Hz, the number of RTCCLK pulses added during a 32-second window is calculated as follows: (512 * CALP) - CALM.

Refer to *Section 26.3.11: RTC smooth digital calibration*.

Bit 14 **CALW8:** Use an 8-second calibration cycle period

When CALW8 is set to '1', the 8-second calibration cycle period is selected.

CALM[1:0] are stuck at "00" when CALW8='1'.

Refer to *Section 26.3.11: RTC smooth digital calibration*.

Bit 13 **CALW16:** Use a 16-second calibration cycle period

When CALW16 is set to '1', the 16-second calibration cycle period is selected. This bit must not be set to '1' if CALW8=1.

Note: CALM[0] is stuck at '0' when CALW16='1'.

Refer to *Section 26.3.11: RTC smooth digital calibration*.

Bits 12:9 Reserved

Bits 8:0 **CALM[8:0]**: Calibration minus

The frequency of the calendar is reduced by masking CALM out of 2^{20} RTCCLK pulses (32 seconds if the input frequency is 32768 Hz). This decreases the frequency of the calendar with a resolution of 0.9537 ppm.

To increase the frequency of the calendar, this feature should be used in conjunction with CALP.

See *Section 26.3.11: RTC smooth digital calibration on page 809*.

Note: This register is write protected. The write access procedure is described in RTC register write protection on page 803

26.6.17 RTC tamper and alternate function configuration register (RTC_TAFCR)

Address offset: 0x40

Backup domain reset value: 0x0000 0000

System reset: not affected

31	30	29	28	27	26	25	24	23	22	21	20	19	18	17	16
Reserved													ALARMOUT TYPE	TSIN SEL	TAMP1 INSEL
													rw	rw	rw

15	14	13	12	11	10	9	8	7	6	5	4	3	2	1	0
TAMP-PUDIS	TAMP-PRCH[1:0]		TAMPFLT[1:0]		TAMPFREQ[2:0]			TAMPTS	Reserved		TAMP2-TRG	TAMP2E	TAMPIE	TAMP1TRG	TAMP1E
rw	rw	rw	rw	rw	rw	rw	rw	rw			rw	rw	rw	rw	rw

Bits 31:19 Reserved. Always read as 0.

Bit 18 **ALARMOUTTYPE**: RTC_ALARM output type

0: RTC_ALARM is an open-drain output

1: RTC_ALARM is a push-pull output

Bit 17 **TSINSEL**: TIMESTAMP mapping

0: RTC_AF1 used as TIMESTAMP

1: RTC_AF2 used as TIMESTAMP

Bit 16 **TAMP1INSEL**: TAMPER1 mapping

0: RTC_AF1 used as TAMPER1

1: RTC_AF2 used as TAMPER1

Note: TAMP1E must be reset when TAMP1INSEL is changed to avoid unwanted setting of TAMP1F.

Bit 15 **TAMPPUDIS**: TAMPER pull-up disable

This bit determines if each of the tamper pins are pre-charged before each sample.

0: Precharge tamper pins before sampling (enable internal pull-up)

1: Disable precharge of tamper pins

Note:

Bits 14:13 **TAMPPRCH[1:0]**: Tamper precharge duration

These bit determines the duration of time during which the pull-up/is activated before each sample. TAMPPRCH is valid for each of the tamper inputs.

0x0: 1 RTCCLK cycle

0x1: 2 RTCCLK cycles

0x2: 4 RTCCLK cycles

0x3: 8 RTCCLK cycles

Bits 12:11 **TAMPFLT[1:0]**: Tamper filter count

These bits determines the number of consecutive samples at the specified level (TAMP*TRG) necessary to activate a Tamper event. TAMPFLT is valid for each of the tamper inputs.

0x0: Tamper is activated on edge of tamper input transitions to the active level (no internal pull-up on tamper input).

0x1: Tamper is activated after 2 consecutive samples at the active level.

0x2: Tamper is activated after 4 consecutive samples at the active level.

0x3: Tamper is activated after 8 consecutive samples at the active level.

Bits 10:8 **TAMPFREQ[2:0]**: Tamper sampling frequency

Determines the frequency at which each of the tamper inputs are sampled.

0x0: RTCCLK / 32768 (1 Hz when RTCCLK = 32768 Hz)

0x1: RTCCLK / 16384 (2 Hz when RTCCLK = 32768 Hz)

0x2: RTCCLK / 8192 (4 Hz when RTCCLK = 32768 Hz)

0x3: RTCCLK / 4096 (8 Hz when RTCCLK = 32768 Hz)

0x4: RTCCLK / 2048 (16 Hz when RTCCLK = 32768 Hz)

0x5: RTCCLK / 1024 (32 Hz when RTCCLK = 32768 Hz)

0x6: RTCCLK / 512 (64 Hz when RTCCLK = 32768 Hz)

0x7: RTCCLK / 256 (128 Hz when RTCCLK = 32768 Hz)

Bit 7 **TAMPTS**: Activate timestamp on tamper detection event

0: Tamper detection event does not cause a timestamp to be saved

1: Save timestamp on tamper detection event

TAMPTS is valid even if TSE=0 in the RTC_CR register.

Bits 6:5 Reserved. Always read as 0.

Bit 4 **TAMP2TRG**: Active level for tamper 2

if TAMPFLT != 00

0: TAMPER2 staying low triggers a tamper detection event.

1: TAMPER2 staying high triggers a tamper detection event.

if TAMPFLT = 00:

0: TAMPER2 rising edge triggers a tamper detection event.

1: TAMPER2 falling edge triggers a tamper detection event.

Bit 3 **TAMP2E**: Tamper 2 detection enable

0: Tamper 2 detection disabled

1: Tamper 2 detection enabled

Bit 2 **TAMPIE**: Tamper interrupt enable

0: Tamper interrupt disabled

1: Tamper interrupt enabled

Bit 1 **TAMP1TRG**: Active level for tamper 1

if TAMPFLT != 00

0: TAMPER1 staying low triggers a tamper detection event.

1: TAMPER1 staying high triggers a tamper detection event.

if TAMPFLT = 00:

0: TAMPER1 rising edge triggers a tamper detection event.

1: TAMPER1 falling edge triggers a tamper detection event.

Caution: When TAMPFLT = 0, TAMPxE must be reset when TAMPxTRG is changed to avoid spuriously setting TAMPxF.

Bit 0 **TAMP1E**: Tamper 1 detection enable

0: Tamper 1 detection disabled

1: Tamper 1 detection enabled

26.6.18 RTC alarm A sub second register (RTC_ALRMASSR)

Address offset: 0x44

Backup domain reset value: 0x0000 0000

System reset: not affected

31	30	29	28	27	26	25	24	23	22	21	20	19	18	17	16
Reserved				MASKSS[3:0]				Reserved							
r	r	r	r	rw	rw	rw	rw	r	r	r	r	r	r	r	r

15	14	13	12	11	10	9	8	7	6	5	4	3	2	1	0
Reserved	SS[14:0]														
r	rw	rw	rw	rw	rw	rw	rw	rw	rw	rw	rw	rw	w	rw	rw

Bits 31:28 Reserved

Bits 27:24 **MASKSS[3:0]**: Mask the most-significant bits starting at this bit

0: No comparison on sub seconds for Alarm A. The alarm is set when the seconds unit is incremented (assuming that the rest of the fields match).

1: SS[14:1] are don't care in Alarm A comparison. Only SS[0] is compared.

2: SS[14:2] are don't care in Alarm A comparison. Only SS[1:0] are compared.

3: SS[14:3] are don't care in Alarm A comparison. Only SS[2:0] are compared.

...

12: SS[14:12] are don't care in Alarm A comparison. SS[11:0] are compared.

13: SS[14:13] are don't care in Alarm A comparison. SS[12:0] are compared.

14: SS[14] is don't care in Alarm A comparison. SS[13:0] are compared.

15: All 15 SS bits are compared and must match to activate alarm.

The overflow bits of the synchronous counter (bits 15) is never compared. This bit can be different from 0 only after a shift operation.

Bits 23:15 Reserved

Bits 14:0 **SS[14:0]**: Sub seconds value

This value is compared with the contents of the synchronous prescaler's counter to determine if Alarm A is to be activated. Only bits 0 up MASKSS-1 are compared.

Note: This register can be written only when ALRAE is reset in RTC_CR register, or in initialization mode.

This register is write protected. The write access procedure is described in RTC register write protection on page 803

26.6.19 RTC alarm B sub second register (RTC_ALRMBSSR)

Address offset: 0x48

Backup domain reset value: 0x0000 0000

System reset: not affected

31	30	29	28	27	26	25	24	23	22	21	20	19	18	17	16
Reserved				MASKSS[3:0]				Reserved							
r	r	r	r	rw	rw	rw	rw	r	r	r	r	r	r	r	r

15	14	13	12	11	10	9	8	7	6	5	4	3	2	1	0
Reserved	SS[14:0]														
r	rw	rw	rw	rw	rw	rw	rw	rw	rw	rw	rw	rw	w	rw	rw

Bits 31:28 Reserved

Bits 27:24 **MASKSS[3:0]**: Mask the most-significant bits starting at this bit

0x0: No comparison on sub seconds for Alarm B. The alarm is set when the seconds unit is incremented (assuming that the rest of the fields match).
0x1: SS[14:1] are don't care in Alarm B comparison. Only SS[0] is compared.
0x2: SS[14:2] are don't care in Alarm B comparison. Only SS[1:0] are compared.
0x3: SS[14:3] are don't care in Alarm B comparison. Only SS[2:0] are compared.
...
0xC: SS[14:12] are don't care in Alarm B comparison. SS[11:0] are compared.
0xD: SS[14:13] are don't care in Alarm B comparison. SS[12:0] are compared.
0xE: SS[14] is don't care in Alarm B comparison. SS[13:0] are compared.
0xF: All 15 SS bits are compared and must match to activate alarm.
The overflow bits of the synchronous counter (bits 15) is never compared. This bit can be different from 0 only after a shift operation.

Bits 23:15 Reserved

Bits 14:0 **SS[14:0]**: Sub seconds value

This value is compared with the contents of the synchronous prescaler's counter to determine if Alarm B is to be activated. Only bits 0 up to MASKSS-1 are compared.

Note: This register can be written only when ALRBIE is reset in RTC_CR register, or in initialization mode.

This register is write protected.The write access procedure is described in Section : RTC register write protection

26.6.20 RTC backup registers (RTC_BKPxR)

Address offset: 0x50 to 0x9C

Backup domain reset value: 0x0000 0000

System reset: not affected

31	30	29	28	27	26	25	24	23	22	21	20	19	18	17	16
BKP[31:16]															
rw	rw	rw	rw	rw	rw	rw	rw	rw	rw	rw	rw	rw	rw	rw	rw
15	14	13	12	11	10	9	8	7	6	5	4	3	2	1	0
BKP[15:0]															
rw	rw	rw	rw	rw	rw	rw	rw	rw	rw	rw	rw	rw	w	rw	rw

Bits 31:0 BKP[31:0]

The application can write or read data to and from these registers.
They are powered-on by V_{BAT} when V_{DD} is switched off, so that they are not reset by System reset, and their contents remain valid when the device operates in low-power mode.
This register is reset on a tamper detection event, as long as TAMPxF=1.

26.6.21 RTC register map

Table 121. RTC register map and reset values

Offset	Register	31	30	29	28	27	26	25	24	23	22	21	20	19	18	17	16	15	14	13	12	11	10	9	8	7	6	5	4	3	2	1	0
0x00	**RTC_TR**	Reserved									PM	HT [1:0]		HU[3:0]				Reserved	MNT[2:0]			MNU[3:0]				Reserved	ST[2:0]			SU[3:0]			
	Reset value										0	0	0	0	0	0	0		0	0	0	0	0	0	0		0	0	0	0	0	0	0
0x04	**RTC_DR**	Reserved								YT[3:0]				YU[3:0]				WDU[2:0]			MT	MU[3:0]				Reserved	DT [1:0]			DU[3:0]			
	Reset value																	0	0	1	0	0	0	0	1		0	0	0	0	0	0	1
0x08	**RTC_CR**	Reserved								COE	OSEL [1:0]		POL	COSEL	BKP	SUB1H	ADD1H	TSIE	WUTIE	ALRBIE	ALRAIE	TSE	WUTE	ALRBE	ALRAE	DCE	FMT	BYPSHAD	REFCKON	TSEDGE	WCKSEL [2:0]			
	Reset value									0	0	0	0	0	0	0	0	0	0	0	0	0	0	0	0	0	0	0	0	0	0	0	0
0x0C	RTC_ISR	Reserved																	TAMP2F	TAMP1F	TSOVF	TSF	WUTF	ALRBF	ALRAF	INIT	INITF	RSF	INITS	SHPF	WUTWF	ALRBWF	ALRAWF
	Reset value																		0	0	0	0	0	0	0	0	0	0	0	0	1	0	1
0x10	**RTC_PRER**	Reserved									PREDIV_A[6:0]							Reserved	PREDIV_S[14:0]														
	Reset value										1	1	1	1	1	1	1		0	0	0	0	0	0	0	1	1	1	1	1	1	1	1
0x14	**RTC_WUTR**	Reserved																WUT[15:0]															
	Reset value																	1	1	1	1	1	1	1	1	1	1	1	1	1	1	1	1
0x18	**RTC_CALIBR**	Reserved																								DCS	Reserved			DC[4:0]			
	Reset value																									0				0	0	0	0	0

Table 121. RTC register map and reset values (continued)

Offset	Register	31	30	29	28	27	26	25	24	23	22	21	20	19	18	17	16	15	14	13	12	11	10	9	8	7	6	5	4	3	2	1	0
0x1C	**RTC_ALRMAR**	MSK4	WDSEL	DT [1:0]		DU[3:0]				MSK3	PM	HT [1:0]		HU[3:0]				MSK2	MNT[2:0]			MNU[3:0]				MSK1	ST[2:0]			SU[3:0]			
	Reset value	0	0	0	0	0	0	0	0	0	0	0	0	0	0	0	0	0	0	0	0	0	0	0	0	0	0	0	0	0	0	0	0
0x20	**RTC_ALRMBR**	MSK4	WDSEL	DT [1:0]		DU[3:0]				MSK3	PM	HT [1:0]		HU[3:0]				MSK2	MNT[2:0]			MNU[3:0]				MSK2	ST[2:0]			SU[3:0]			
	Reset value	0	0	0	0	0	0	0	0	0	0	0	0	0	0	0	0	0	0	0	0	0	0	0	0	0	0	0	0	0	0	0	0
0x24	**RTC_WPR**	Reserved																								KEY[7:0]							
	Reset value																									0	0	0	0	0	0	0	0
0x28	**RTC_SSR**	Reserved																SS[15:0]															
	Reset value																	0	0	0	0	0	0	0	0	0	0	0	0	0	0	0	0
0x2C	RTC_SHIFTR	ADD1S	Reserved																SUBFS[14:0]														
	Reset value	0																	0	0	0	0	0	0	0	0	0	0	0	0	0	0	0
0x30	**RTC_TSTR**	Reserved									PM	HT[1:0]		HU[3:0]				Reserved	MNT[2:0]			MNU[3:0]				Reserved	ST[2:0]			SU[3:0]			
	Reset value										0	0	0	0	0	0	0		0	0	0	0	0	0	0		0	0	0	0	0	0	0
0x38	**RTC_TSSSR**	Reserved																SS[15:0]															
	Reset value																	0	0	0	0	0	0	0	0	0	0	0	0	0	0	0	0
0x3C	**RTC_ CALR**	Reserved																CALP	CALW8	CALW16	Reserved					CALM[8:0]							
	Reset value																	0	0	0						0	0	0	0	0	0	0	0
0x40	RTC_TAFCR	Reserved													ALARMOUTTYPE	TSINSEL	TAMP1INSEL	TAMPPUDIS	TAMPPRCH[1:0]		TAMPFLT[1:0]		TAMPFREQ[2:0]			TAMPTS	Reserved		TAMP2TRG	TAMP2E	TAMPIE	TAMP1ETRG	TAMP1E
	Reset value														0	0	0	0	0	0	0	0	0	0	0	0			0	0	0	0	0
0x44	**RTC_ ALRMASSR**	Reserved				MASKSS[3:0]				Reserved									SS[14:0]														
	Reset value					0	0	0	0										0	0	0	0	0	0	0	0	0	0	0	0	0	0	0
0x48	**RTC_ ALRMBSSR**	Reserved				MASKSS[3:0]				Reserved									SS[14:0]														
	Reset value					0	0	0	0										0	0	0	0	0	0	0	0	0	0	0	0	0	0	0
0x50 to 0x9C	**RTC_BKP0R**	BKP[31:0]																															
	Reset value	0	0	0	0	0	0	0	0	0	0	0	0	0	0	0	0	0	0	0	0	0	0	0	0	0	0	0	0	0	0	0	0
	to **RTC_BKP19R**	BKP[31:0]																															
	Reset value	0	0	0	0	0	0	0	0	0	0	0	0	0	0	0	0	0	0	0	0	0	0	0	0	0	0	0	0	0	0	0	0

Refer to *Section 2.3: Memory map* for the register boundary addresses.

Caution: In *Table 121*, the reset value is the value after a backup domain reset. The majority of the registers are not affected by a system reset. For more information, please refer to *Section 26.3.7: Resetting the RTC*.

27 Inter-integrated circuit (I2C) interface

This section applies to the whole STM32F4xx family, unless otherwise specified.

27.1 I^2C introduction

I^2C (inter-integrated circuit) bus Interface serves as an interface between the microcontroller and the serial I^2C bus. It provides multimaster capability, and controls all I^2C bus-specific sequencing, protocol, arbitration and timing. It supports the standard mode (Sm, up to 100 kHz) and Fm mode (Fm, up to 400 kHz).

It may be used for a variety of purposes, including CRC generation and verification, SMBus (system management bus) and PMBus (power management bus).

Depending on specific device implementation DMA capability can be available for reduced CPU overload.

27.2 I^2C main features

- Parallel-bus/I^2C protocol converter
- Multimaster capability: the same interface can act as Master or Slave
- I^2C Master features:
  - Clock generation
  - Start and Stop generation
- I^2C Slave features:
  - Programmable I^2C Address detection
  - Dual Addressing Capability to acknowledge 2 slave addresses
  - Stop bit detection
- Generation and detection of 7-bit/10-bit addressing and General Call
- Supports different communication speeds:
  - Standard Speed (up to 100 kHz)
  - Fast Speed (up to 400 kHz)
- Analog noise filter
- Programmable digital noise filter for STM32F42xxx and STM32F43xxx
- Status flags:
  - Transmitter/Receiver mode flag
  - End-of-Byte transmission flag
  - I^2C busy flag
- Error flags:
  - Arbitration lost condition for master mode
  - Acknowledgment failure after address/ data transmission
  - Detection of misplaced start or stop condition
  - Overrun/Underrun if clock stretching is disabled
- 2 Interrupt vectors:

  - 1 Interrupt for successful address/ data communication
  - 1 Interrupt for error condition
- Optional clock stretching
- 1-byte buffer with DMA capability
- Configurable PEC (packet error checking) generation or verification:
  - PEC value can be transmitted as last byte in Tx mode
  - PEC error checking for last received byte
- SMBus 2.0 Compatibility:
  - 25 ms clock low timeout delay
  - 10 ms master cumulative clock low extend time
  - 25 ms slave cumulative clock low extend time
  - Hardware PEC generation/verification with ACK control
  - Address Resolution Protocol (ARP) supported
- PMBus Compatibility

Note: Some of the above features may not be available in certain products. The user should refer to the product data sheet, to identify the specific features supported by the I²C interface implementation.

27.3 I²C functional description

In addition to receiving and transmitting data, this interface converts it from serial to parallel format and vice versa. The interrupts are enabled or disabled by software. The interface is connected to the I²C bus by a data pin (SDA) and by a clock pin (SCL). It can be connected with a standard (up to 100 kHz) or fast (up to 400 kHz) I²C bus.

27.3.1 Mode selection

The interface can operate in one of the four following modes:

- Slave transmitter
- Slave receiver
- Master transmitter
- Master receiver

By default, it operates in slave mode. The interface automatically switches from slave to master, after it generates a START condition and from master to slave, if an arbitration loss or a Stop generation occurs, allowing multimaster capability.

Communication flow

In Master mode, the I²C interface initiates a data transfer and generates the clock signal. A serial data transfer always begins with a start condition and ends with a stop condition. Both start and stop conditions are generated in master mode by software.

In Slave mode, the interface is capable of recognizing its own addresses (7 or 10-bit), and the General Call address. The General Call address detection may be enabled or disabled by software.

Data and addresses are transferred as 8-bit bytes, MSB first. The first byte(s) following the start condition contain the address (one in 7-bit mode, two in 10-bit mode). The address is always transmitted in Master mode.

A 9th clock pulse follows the 8 clock cycles of a byte transfer, during which the receiver must send an acknowledge bit to the transmitter. Refer to *Figure 238*.

Figure 238. I^{2}C bus protocol

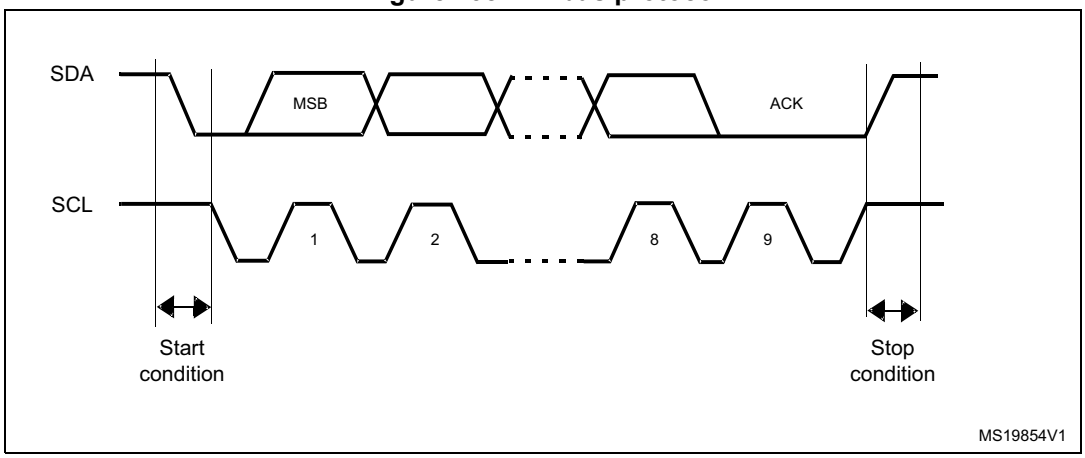

Acknowledge may be enabled or disabled by software. The I^{2}C interface addresses (dual addressing 7-bit/ 10-bit and/or general call address) can be selected by software.

The block diagram of the I^{2}C interface is shown in *Figure 239*.

Figure 239. I²C block diagram for STM32F40x/41x

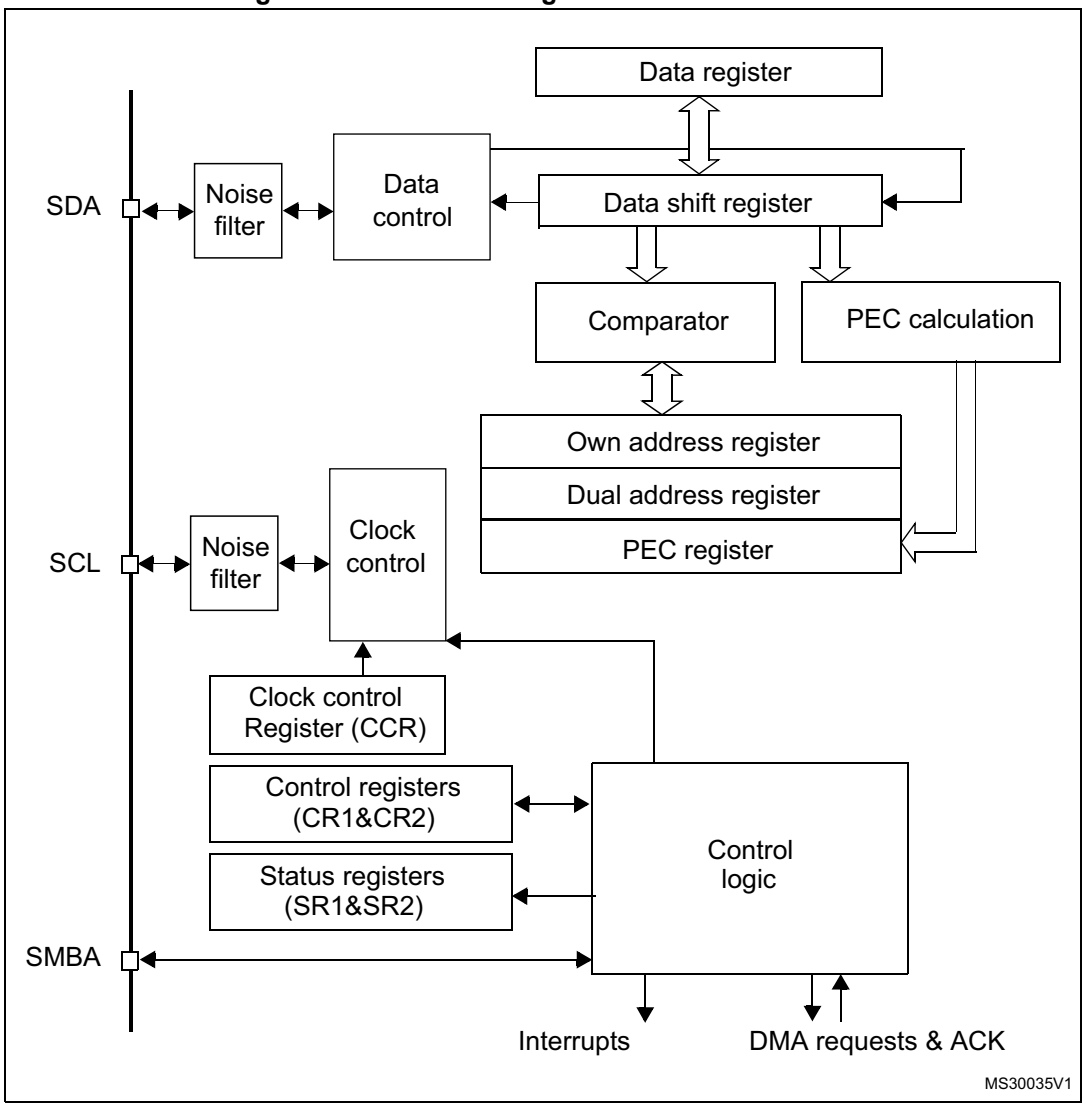

Figure 240. I²C block diagram for STM32F42x/43x

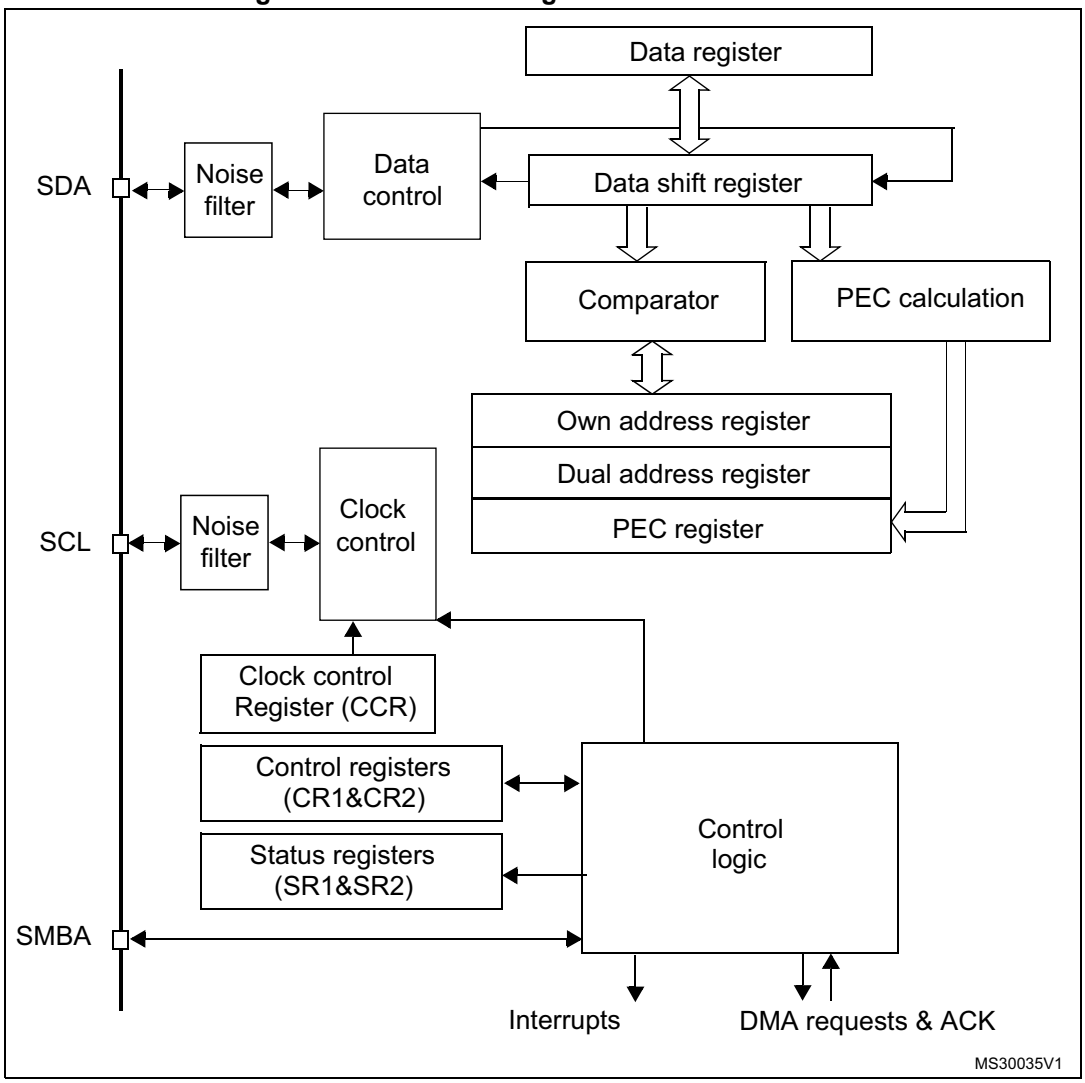

1. SMBA is an optional signal in SMBus mode. This signal is not applicable if SMBus is disabled.

27.3.2 I²C slave mode

By default the I²C interface operates in Slave mode. To switch from default Slave mode to Master mode a Start condition generation is needed.

The peripheral input clock must be programmed in the I2C_CR2 register in order to generate correct timings. The peripheral input clock frequency must be at least:

- 2 MHz in Sm mode
- 4 MHz in Fm mode

As soon as a start condition is detected, the address is received from the SDA line and sent to the shift register. Then it is compared with the address of the interface (OAR1) and with OAR2 (if ENDUAL=1) or the General Call address (if ENGC = 1).

Note: In 10-bit addressing mode, the comparison includes the header sequence (11110xx0), where xx denotes the two most significant bits of the address.

Header or address not matched: the interface ignores it and waits for another Start condition.

Header matched (10-bit mode only): the interface generates an acknowledge pulse if the ACK bit is set and waits for the 8-bit slave address.

Address matched: the interface generates in sequence:

- An acknowledge pulse if the ACK bit is set
- The ADDR bit is set by hardware and an interrupt is generated if the ITEVFEN bit is set.
- If ENDUAL=1, the software has to read the DUALF bit to check which slave address has been acknowledged.

In 10-bit mode, after receiving the address sequence the slave is always in Receiver mode. It will enter Transmitter mode on receiving a repeated Start condition followed by the header sequence with matching address bits and the least significant bit set (11110xx1).

The TRA bit indicates whether the slave is in Receiver or Transmitter mode.

Slave transmitter

Following the address reception and after clearing ADDR, the slave sends bytes from the DR register to the SDA line via the internal shift register.

The slave stretches SCL low until ADDR is cleared and DR filled with the data to be sent (see *Figure 241* Transfer sequencing EV1 EV3).

When the acknowledge pulse is received:

- The TxE bit is set by hardware with an interrupt if the ITEVFEN and the ITBUFEN bits are set.

If TxE is set and some data were not written in the I2C_DR register before the end of the next data transmission, the BTF bit is set and the interface waits until BTF is cleared by a read to I2C_SR1 followed by a write to the I2C_DR register, stretching SCL low.

Figure 241. Transfer sequence diagram for slave transmitter

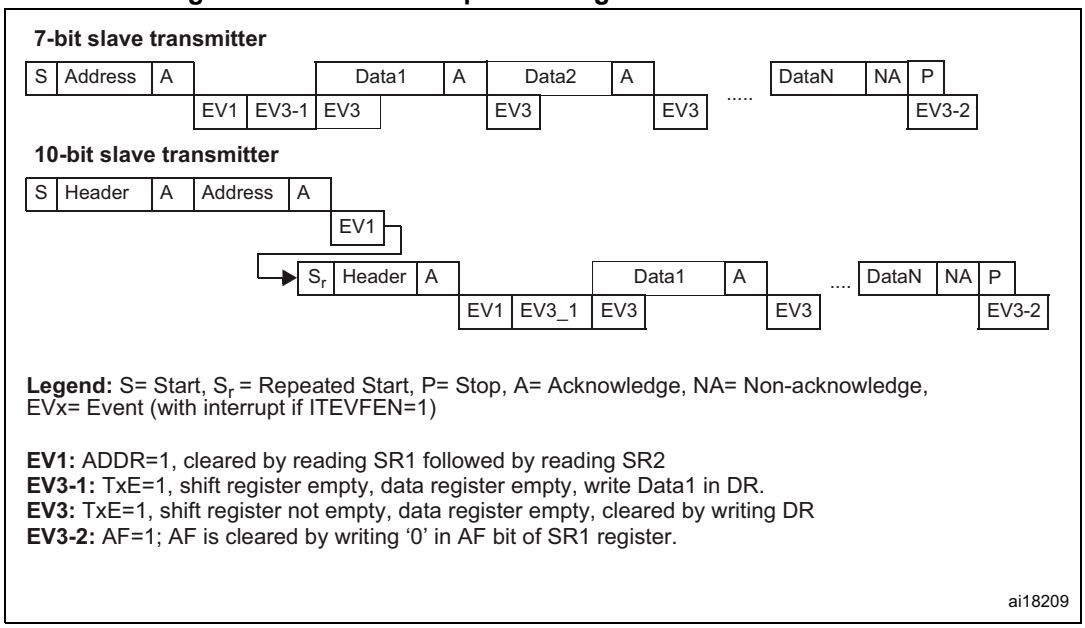

1. The EV1 and EV3_1 events stretch SCL low until the end of the corresponding software sequence.
2. The EV3 event stretches SCL low if the software sequence is not completed before the end of the next byte transmission.

Slave receiver

Following the address reception and after clearing ADDR, the slave receives bytes from the SDA line into the DR register via the internal shift register. After each byte the interface generates in sequence:

- An acknowledge pulse if the ACK bit is set
- The RxNE bit is set by hardware and an interrupt is generated if the ITEVFEN and ITBUFEN bit is set.

If RxNE is set and the data in the DR register is not read before the end of the next data reception, the BTF bit is set and the interface waits until BTF is cleared by a read from the I2C_DR register, stretching SCL low (see *Figure 242* Transfer sequencing).

Figure 242. Transfer sequence diagram for slave receiver

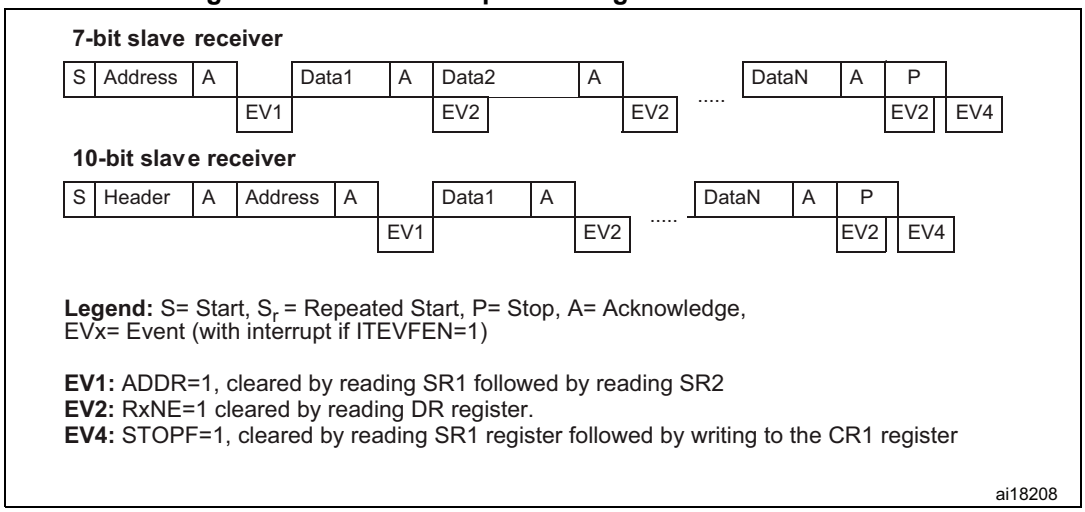

1. The EV1 event stretches SCL low until the end of the corresponding software sequence.
2. The EV2 event stretches SCL low if the software sequence is not completed before the end of the next byte reception.
3. After checking the SR1 register content, the user should perform the complete clearing sequence for each flag found set.
   Thus, for ADDR and STOPF flags, the following sequence is required inside the I2C interrupt routine:
   READ SR1
   if (ADDR == 1) {READ SR1; READ SR2}
   if (STOPF == 1) {READ SR1; WRITE CR1}
   The purpose is to make sure that both ADDR and STOPF flags are cleared if both are found set.

Closing slave communication

After the last data byte is transferred a Stop Condition is generated by the master. The interface detects this condition and sets:

- The STOPF bit and generates an interrupt if the ITEVFEN bit is set.

The STOPF bit is cleared by a read of the SR1 register followed by a write to the CR1 register (see EV4 in *Figure 242*).

27.3.3 I²C master mode

In Master mode, the I²C interface initiates a data transfer and generates the clock signal. A serial data transfer always begins with a Start condition and ends with a Stop condition. Master mode is selected as soon as the Start condition is generated on the bus with a START bit.

The following is the required sequence in master mode.

- Program the peripheral input clock in I2C_CR2 Register in order to generate correct timings
- Configure the clock control registers
- Configure the rise time register
- Program the I2C_CR1 register to enable the peripheral
- Set the START bit in the I2C_CR1 register to generate a Start condition

The peripheral input clock frequency must be at least:

- 2 MHz in Sm mode
- 4 MHz in Fm mode

SCL master clock generation

The CCR bits are used to generate the high and low level of the SCL clock, starting from the generation of the rising and falling edge (respectively). As a slave may stretch the SCL line, the peripheral checks the SCL input from the bus at the end of the time programmed in TRISE bits after rising edge generation.

- If the SCL line is low, it means that a slave is stretching the bus, and the high level counter stops until the SCL line is detected high. This allows to guarantee the minimum HIGH period of the SCL clock parameter.
- If the SCL line is high, the high level counter keeps on counting.

Indeed, the feedback loop from the SCL rising edge generation by the peripheral to the SCL rising edge detection by the peripheral takes time even if no slave stretches the clock. This loopback duration is linked to the SCL rising time (impacting SCL VIH input detection), plus delay due to the noise filter present on the SCL input path, plus delay due to internal SCL input synchronization with APB clock. The maximum time used by the feedback loop is programmed in the TRISE bits, so that the SCL frequency remains stable whatever the SCL rising time.

Start condition

Setting the START bit causes the interface to generate a Start condition and to switch to Master mode (MSL bit set) when the BUSY bit is cleared.

Note: In master mode, setting the START bit causes the interface to generate a ReStart condition at the end of the current byte transfer.

Once the Start condition is sent:

- The SB bit is set by hardware and an interrupt is generated if the ITEVFEN bit is set.

Then the master waits for a read of the SR1 register followed by a write in the DR register with the Slave address (see *Figure 243* and *Figure 244* Transfer sequencing EV5).

Slave address transmission

Then the slave address is sent to the SDA line via the internal shift register.

- In 10-bit addressing mode, sending the header sequence causes the following event:
  - The ADD10 bit is set by hardware and an interrupt is generated if the ITEVFEN bit is set.

  Then the master waits for a read of the SR1 register followed by a write in the DR register with the second address byte (see *Figure 243* and *Figure 244* Transfer sequencing).
  - The ADDR bit is set by hardware and an interrupt is generated if the ITEVFEN bit is set.

  Then the master waits for a read of the SR1 register followed by a read of the SR2 register (see *Figure 243* and *Figure 244* Transfer sequencing).
- In 7-bit addressing mode, one address byte is sent.

  As soon as the address byte is sent,
  - The ADDR bit is set by hardware and an interrupt is generated if the ITEVFEN bit is set.

  Then the master waits for a read of the SR1 register followed by a read of the SR2 register (see *Figure 243* and *Figure 244* Transfer sequencing).

The master can decide to enter Transmitter or Receiver mode depending on the LSB of the slave address sent.

- In 7-bit addressing mode,
  - To enter Transmitter mode, a master sends the slave address with LSB reset.
  - To enter Receiver mode, a master sends the slave address with LSB set.
- In 10-bit addressing mode,
  - To enter Transmitter mode, a master sends the header (11110xx0) and then the slave address, (where xx denotes the two most significant bits of the address).
  - To enter Receiver mode, a master sends the header (11110xx0) and then the slave address. Then it should send a repeated Start condition followed by the header (11110xx1), (where xx denotes the two most significant bits of the address).

  The TRA bit indicates whether the master is in Receiver or Transmitter mode.

Master transmitter

Following the address transmission and after clearing ADDR, the master sends bytes from the DR register to the SDA line via the internal shift register.

The master waits until the first data byte is written into I2C_DR (see *Figure 243* Transfer sequencing EV8_1).

When the acknowledge pulse is received, the TxE bit is set by hardware and an interrupt is generated if the ITEVFEN and ITBUFEN bits are set.

If TxE is set and a data byte was not written in the DR register before the end of the last data transmission, BTF is set and the interface waits until BTF is cleared by a write to I2C_DR, stretching SCL low.

Closing the communication

After the last byte is written to the DR register, the STOP bit is set by software to generate a Stop condition (see *Figure 243* Transfer sequencing EV8_2). The interface automatically goes back to slave mode (MSL bit cleared).

Note: Stop condition should be programmed during EV8_2 event, when either TxE or BTF is set.

Figure 243. Transfer sequence diagram for master transmitter

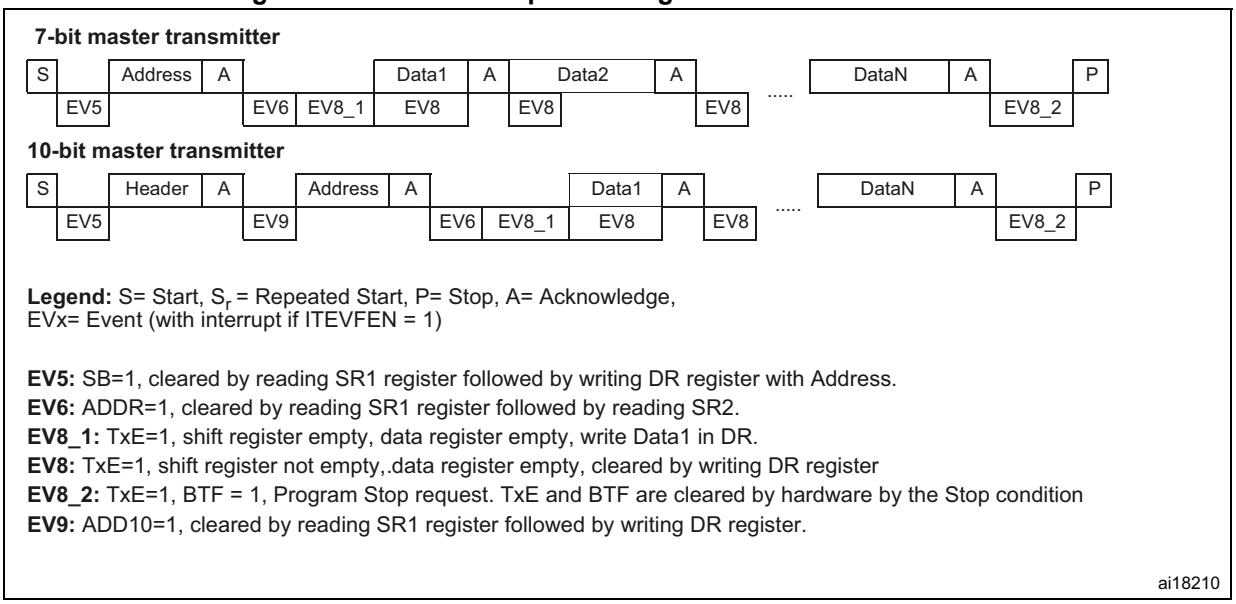

1. The EV5, EV6, EV9, EV8_1 and EV8_2 events stretch SCL low until the end of the corresponding software sequence.
2. The EV8 event stretches SCL low if the software sequence is not complete before the end of the next byte transmission.

Master receiver

Following the address transmission and after clearing ADDR, the I^2C interface enters Master Receiver mode. In this mode the interface receives bytes from the SDA line into the DR register via the internal shift register. After each byte the interface generates in sequence:

1. An acknowledge pulse if the ACK bit is set
2. The RxNE bit is set and an interrupt is generated if the ITEVFEN and ITBUFEN bits are set (see *Figure 244* Transfer sequencing EV7).

If the RxNE bit is set and the data in the DR register is not read before the end of the last data reception, the BTF bit is set by hardware and the interface waits until BTF is cleared by a read in the DR register, stretching SCL low.

Closing the communication

The master sends a NACK for the last byte received from the slave. After receiving this NACK, the slave releases the control of the SCL and SDA lines. Then the master can send a Stop/Restart condition.

1. To generate the nonacknowledge pulse after the last received data byte, the ACK bit must be cleared just after reading the second last data byte (after second last RxNE event).
2. In order to generate the Stop/Restart condition, software must set the STOP/START bit after reading the second last data byte (after the second last RxNE event).
3. In case a single byte has to be received, the Acknowledge disable is made during EV6 (before ADDR flag is cleared) and the STOP condition generation is made after EV6.

After the Stop condition generation, the interface goes automatically back to slave mode (MSL bit cleared).

Figure 244. Transfer sequence diagram for master receiver

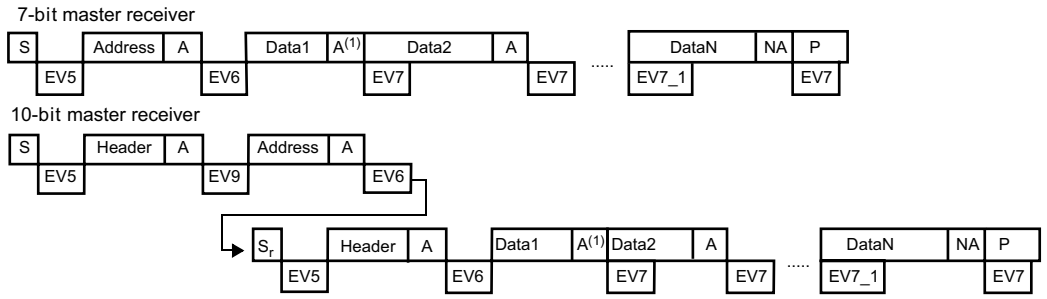

Legend: S= Start, S_r = Repeated Start, P= Stop, A= Acknowledge, NA= Non-acknowledge, EVx= Event (with interrupt if ITEVFEN=1)

EV5: SB=1, cleared by reading SR1 register followed by writing DR register.

EV6: ADDR=1, cleared by reading SR1 register followed by reading SR2. In 10-bit master receiver mode, this sequence should be followed by writing CR2 with START = 1.

In case of the reception of 1 byte, the Acknowledge disable must be performed during EV6 event, i.e. before clearing ADDR flag.

EV7: RxNE=1 cleared by reading DR register.

EV7_1: RxNE=1 cleared by reading DR register, program ACK=0 and STOP request

EV9: ADD10=1, cleared by reading SR1 register followed by writing DR register.

ai17540d

1. If a single byte is received, it is NA.
2. The EV5, EV6 and EV9 events stretch SCL low until the end of the corresponding software sequence.
3. The EV7 event stretches SCL low if the software sequence is not completed before the end of the next byte reception.
4. The EV7_1 software sequence must be completed before the ACK pulse of the current byte transfer.

The procedures described below are recommended if the EV7-1 software sequence is not completed before the ACK pulse of the current byte transfer.

These procedures must be followed to make sure:

- The ACK bit is set low on time before the end of the last data reception
- The STOP bit is set high after the last data reception without reception of supplementary data.

For 2-byte reception:

- Wait until ADDR = 1 (SCL stretched low until the ADDR flag is cleared)
- Set ACK low, set POS high
- Clear ADDR flag
- Wait until BTF = 1 (Data 1 in DR, Data2 in shift register, SCL stretched low until a data 1 is read)
- Set STOP high
- Read data 1 and 2

For N >2 -byte reception, from N-2 data reception

- Wait until BTF = 1 (data N-2 in DR, data N-1 in shift register, SCL stretched low until data N-2 is read)
- Set ACK low
- Read data N-2
- Wait until BTF = 1 (data N-1 in DR, data N in shift register, SCL stretched low until a data N-1 is read)
- Set STOP high
- Read data N-1 and N

27.3.4 Error conditions

The following are the error conditions which may cause communication to fail.

Bus error (BERR)

This error occurs when the I^2C interface detects an external Stop or Start condition during an address or a data transfer. In this case:

- the BERR bit is set and an interrupt is generated if the ITERREN bit is set
- in Slave mode: data are discarded and the lines are released by hardware:
  - in case of a misplaced Start, the slave considers it is a restart and waits for an address, or a Stop condition
  - in case of a misplaced Stop, the slave behaves like for a Stop condition and the lines are released by hardware
- In Master mode: the lines are not released and the state of the current transmission is not affected. It is up to the software to abort or not the current transmission

Acknowledge failure (AF)

This error occurs when the interface detects a nonacknowledge bit. In this case:

- the AF bit is set and an interrupt is generated if the ITERREN bit is set
- a transmitter which receives a NACK must reset the communication:
  - If Slave: lines are released by hardware
  - If Master: a Stop or repeated Start condition must be generated by software

Arbitration lost (ARLO)

This error occurs when the I^2C interface detects an arbitration lost condition. In this case

- the ARLO bit is set by hardware (and an interrupt is generated if the ITERREN bit is set)
- the I^2C Interface goes automatically back to slave mode (the MSL bit is cleared). When the I^2C loses the arbitration, it is not able to acknowledge its slave address in the same transfer, but it can acknowledge it after a repeated Start from the winning master.
- lines are released by hardware

Overrun/underrun error (OVR)

An overrun error can occur in slave mode when clock stretching is disabled and the I^2C interface is receiving data. The interface has received a byte (RxNE=1) and the data in DR has not been read, before the next byte is received by the interface. In this case,

- The last received byte is lost.
- In case of Overrun error, software should clear the RxNE bit and the transmitter should re-transmit the last received byte.

Underrun error can occur in slave mode when clock stretching is disabled and the I^2C interface is transmitting data. The interface has not updated the DR with the next byte (TxE=1), before the clock comes for the next byte. In this case,

- The same byte in the DR register will be sent again
- The user should make sure that data received on the receiver side during an underrun error are discarded and that the next bytes are written within the clock low time specified in the I^2C bus standard.

For the first byte to be transmitted, the DR must be written after ADDR is cleared and before the first SCL rising edge. If not possible, the receiver must discard the first data.

27.3.5 Programmable noise filter

The programmable noise filter is available on STM32F42xxx and STM32F43xxx devices only.

In Fm mode, the I^2C standard requires that spikes are suppressed to a length of 50 ns on SDA and SCL lines.

An analog noise filter is implemented in the SDA and SCL I/Os. This filter is enabled by default and can be disabled by setting the ANOFF bit in the I2C_FLTR register.

A digital noise filter can be enabled by configuring the DNF[3:0] bits to a non-zero value. This suppresses the spikes on SDA and SCL inputs with a length of up to DNF[3:0] * T_{PCLK1}.

Enabling the digital noise filter increases the SDA hold time by (DNF[3:0] +1)* T_{PCLK}.

To be compliant with the maximum hold time of the I^2C-bus specification version 2.1 (Thd:dat), the DNF bits must be programmed using the constraints shown in *Table 122*, and assuming that the analog filter is disabled.

Note: DNF[3:0] must only be configured when the I^2C is disabled (PE = 0). If the analog filter is also enabled, the digital filter is added to the analog filter.

Table 122. Maximum DNF[3:0] value to be compliant with Thd:dat(max)

PCLK1 frequency	Maximum DNF value	
	Sm mode	Fm mode
2 <= F_{PCLK1} <= 5	2	0
5 < F_{PCLK1} <= 10	12	0
10 < F_{PCLK1} <= 20	15	1
20 < F_{PCLK1} <= 30	15	7

Table 122. Maximum DNF[3:0] value to be compliant with Thd:dat(max) (continued)

PCLK1 frequency	Maximum DNF value	
	Sm mode	Fm mode
$30 < F_{PCLK1} <= 40$	15	13
$40 < F_{PCLK1} <= 50$	15	15

Note: For each frequency range, the constraint is given based on the worst case which is the minimum frequency of the range. Greater DNF values can be used if the system can support maximum hold time violation.

27.3.6 SDA/SCL line control

- If clock stretching is enabled:
  - Transmitter mode: If TxE=1 and BTF=1: the interface holds the clock line low before transmission to wait for the microcontroller to write the byte in the Data Register (both buffer and shift register are empty).
  - Receiver mode: If RxNE=1 and BTF=1: the interface holds the clock line low after reception to wait for the microcontroller to read the byte in the Data Register (both buffer and shift register are full).
- If clock stretching is disabled in Slave mode:
  - Overrun Error in case of RxNE=1 and no read of DR has been done before the next byte is received. The last received byte is lost.
  - Underrun Error in case TxE=1 and no write into DR has been done before the next byte must be transmitted. The same byte will be sent again.
  - Write Collision not managed.

27.3.7 SMBus

Introduction

The System Management Bus (SMBus) is a two-wire interface through which various devices can communicate with each other and with the rest of the system. It is based on I^2C principles of operation. SMBus provides a control bus for system and power management related tasks. A system may use SMBus to pass messages to and from devices instead of toggling individual control lines.

The System Management Bus Specification refers to three types of devices. A *slave* is a device that is receiving or responding to a command. A *master* is a device that issues commands, generates the clocks, and terminates the transfer. A *host* is a specialized master that provides the main interface to the system's CPU. A host must be a master-slave and must support the SMBus host notify protocol. Only one host is allowed in a system.

Similarities between SMBus and I^2C

- 2-wire bus protocol (1 Clk, 1 Data) + SMBus Alert line optional
- Master-slave communication, Master provides clock
- Multi master capability
- SMBus data format similar to I^2C 7-bit addressing format (*Figure 238*).

Differences between SMBus and I^2C

The following table describes the differences between SMBus and I^2C.

Table 123. SMBus vs. I^2C

SMBus	I^2C
Max. speed 100 kHz	Max. speed 400 kHz
Min. clock speed 10 kHz	No minimum clock speed
35 ms clock low timeout	No timeout
Logic levels are fixed	Logic levels are V_{DD} dependent
Different address types (reserved, dynamic etc.)	7-bit, 10-bit and general call slave address types
Different bus protocols (quick command, process call etc.)	No bus protocols

SMBus application usage

With System Management Bus, a device can provide manufacturer information, tell the system what its model/part number is, save its state for a suspend event, report different types of errors, accept control parameters, and return its status. SMBus provides a control bus for system and power management related tasks.

Device identification

Any device that exists on the System Management Bus as a slave has a unique address called the Slave Address. For the list of reserved slave addresses, refer to the SMBus specification version. 2.0 (*http://smbus.org/*).

Bus protocols

The SMBus specification supports up to nine bus protocols. For more details of these protocols and SMBus address types, refer to SMBus specification version. 2.0. These protocols should be implemented by the user software.

Address resolution protocol (ARP)

SMBus slave address conflicts can be resolved by dynamically assigning a new unique address to each slave device. The Address Resolution Protocol (ARP) has the following attributes:

- Address assignment uses the standard SMBus physical layer arbitration mechanism
- Assigned addresses remain constant while device power is applied; address retention through device power loss is also allowed
- No additional SMBus packet overhead is incurred after address assignment. (i.e. subsequent accesses to assigned slave addresses have the same overhead as accesses to fixed address devices.)
- Any SMBus master can enumerate the bus

Unique device identifier (UDID)

In order to provide a mechanism to isolate each device for the purpose of address assignment, each device must implement a unique device identifier (UDID).

For the details on 128-bit UDID and more information on ARP, refer to SMBus specification version 2.0.

SMBus alert mode

SMBus Alert is an optional signal with an interrupt line for devices that want to trade their ability to master for a pin. SMBA is a wired-AND signal just as the SCL and SDA signals are. SMBA is used in conjunction with the SMBus General Call Address. Messages invoked with the SMBus are two bytes long.

A slave-only device can signal the host through SMBA that it wants to talk by setting ALERT bit in I2C_CR1 register. The host processes the interrupt and simultaneously accesses all SMBA devices through the *Alert Response Address* (known as ARA having a value 0001 100X). Only the device(s) which pulled SMBA low will acknowledge the Alert Response Address. This status is identified using SMBALERT Status flag in I2C_SR1 register. The host performs a modified Receive Byte operation. The 7 bit device address provided by the slave transmit device is placed in the 7 most significant bits of the byte. The eighth bit can be a zero or one.

If more than one device pulls SMBA low, the highest priority (lowest address) device will win communication rights via standard arbitration during the slave address transfer. After acknowledging the slave address the device must disengage its SMBA pull-down. If the host still sees SMBA low when the message transfer is complete, it knows to read the ARA again.
A host which does not implement the SMBA signal may periodically access the ARA.

For more details on SMBus Alert mode, refer to SMBus specification version 2.0.

Timeout error

There are differences in the timing specifications between I^2C and SMBus.
SMBus defines a clock low timeout, TIMEOUT of 35 ms. Also SMBus specifies TLOW: SEXT as the cumulative clock low extend time for a slave device. SMBus specifies TLOW: MEXT as the cumulative clock low extend time for a master device. For more details on these timeouts, refer to SMBus specification version 2.0.

The status flag Timeout or Tlow Error in I2C_SR1 shows the status of this feature.

How to use the interface in SMBus mode

To switch from I^2C mode to SMBus mode, the following sequence should be performed.

- Set the SMBus bit in the I2C_CR1 register
- Configure the SMBTYPE and ENARP bits in the I2C_CR1 register as required for the application

If you want to configure the device as a master, follow the Start condition generation procedure in *Section 27.3.3*. Otherwise, follow the sequence in *Section 27.3.2*.

The application has to control the various SMBus protocols by software.

- SMB Device Default Address acknowledged if ENARP=1 and SMBTYPE=0
- SMB Host Header acknowledged if ENARP=1 and SMBTYPE=1
- SMB Alert Response Address acknowledged if SMBALERT=1

27.3.8 DMA requests

DMA requests (when enabled) are generated only for data transfer. DMA requests are generated by Data Register becoming empty in transmission and Data Register becoming full in reception. The DMA must be initialized and enabled before the I2C data transfer. The DMAEN bit must be set in the I2C_CR2 register before the ADDR event. In master mode or in slave mode when clock stretching is enabled, the DMAEN bit can also be set during the ADDR event, before clearing the ADDR flag. The DMA request must be served before the end of the current byte transfer. When the number of data transfers which has been programmed for the corresponding DMA stream is reached, the DMA controller sends an End of Transfer EOT signal to the I^2C interface and generates a Transfer Complete interrupt if enabled:

- Master transmitter: In the interrupt routine after the EOT interrupt, disable DMA requests then wait for a BTF event before programming the Stop condition.
- Master receiver
  - When the number of bytes to be received is equal to or greater than two, the DMA controller sends a hardware signal, EOT_1, corresponding to the last but one data byte (number_of_bytes – 1). If, in the I2C_CR2 register, the LAST bit is set, I^2C automatically sends a NACK after the next byte following EOT_1. The user can generate a Stop condition in the DMA Transfer Complete interrupt routine if enabled.
  - When a single byte must be received: the NACK must be programmed during EV6 event, i.e. program ACK=0 when ADDR=1, before clearing ADDR flag. Then the user can program the STOP condition either after clearing ADDR flag, or in the DMA Transfer Complete interrupt routine.

Transmission using DMA

DMA mode can be enabled for transmission by setting the DMAEN bit in the I2C_CR2 register. Data will be loaded from a Memory area configured using the DMA peripheral (refer to the DMA specification) to the I2C_DR register whenever the TxE bit is set. To map a DMA stream x for I^2C transmission (where x is the stream number), perform the following sequence:

1. Set the I2C_DR register address in the DMA_SxPAR register. The data will be moved to this address from the memory after each TxE event.
2. Set the memory address in the DMA_SxMA0R register (and in DMA_SxMA1R register in the case of a bouble buffer mode). The data will be loaded into I2C_DR from this memory after each TxE event.
3. Configure the total number of bytes to be transferred in the DMA_SxNDTR register. After each TxE event, this value will be decremented.
4. Configure the DMA stream priority using the PL[0:1] bits in the DMA_SxCR register
5. Set the DIR bit in the DMA_SxCR register and configure interrupts after half transfer or full transfer depending on application requirements.
6. Activate the stream by setting the EN bit in the DMA_SxCR register.

When the number of data transfers which has been programmed in the DMA Controller registers is reached, the DMA controller sends an End of Transfer EOT/ EOT_1 signal to the I^2C interface and the DMA generates an interrupt, if enabled, on the DMA stream interrupt vector.

Note: Do not enable the ITBUFEN bit in the I2C_CR2 register if DMA is used for transmission.

Reception using DMA

DMA mode can be enabled for reception by setting the DMAEN bit in the I2C_CR2 register. Data will be loaded from the I2C_DR register to a Memory area configured using the DMA peripheral (refer to the DMA specification) whenever a data byte is received. To map a DMA stream x for I^2C reception (where x is the stream number), perform the following sequence:

1. Set the I2C_DR register address in DMA_SxPAR register. The data will be moved from this address to the memory after each RxNE event.
2. Set the memory address in the DMA_SxMA0R register (and in DMA_SxMA1R register in the case of a bouble buffer mode). The data will be loaded from the I2C_DR register to this memory area after each RxNE event.
3. Configure the total number of bytes to be transferred in the DMA_SxNDTR register. After each RxNE event, this value will be decremented.
4. Configure the stream priority using the PL[0:1] bits in the DMA_SxCR register
5. Reset the DIR bit and configure interrupts in the DMA_SxCR register after half transfer or full transfer depending on application requirements.
6. Activate the stream by setting the EN bit in the DMA_SxCR register.

When the number of data transfers which has been programmed in the DMA Controller registers is reached, the DMA controller sends an End of Transfer EOT/ EOT_1 signal to the I^2C interface and DMA generates an interrupt, if enabled, on the DMA stream interrupt vector.

Note: Do not enable the ITBUFEN bit in the I2C_CR2 register if DMA is used for reception.

27.3.9 Packet error checking

A PEC calculator has been implemented to improve the reliability of communication. The PEC is calculated by using the $C(x) = x^8 + x^2 + x + 1$ CRC-8 polynomial serially on each bit.

- PEC calculation is enabled by setting the ENPEC bit in the I2C_CR1 register. PEC is a CRC-8 calculated on all message bytes including addresses and R/W bits.
  - In transmission: set the PEC transfer bit in the I2C_CR1 register after the TxE event corresponding to the last byte. The PEC will be transferred after the last transmitted byte.
  - In reception: set the PEC bit in the I2C_CR1 register after the RxNE event corresponding to the last byte so that the receiver sends a NACK if the next received byte is not equal to the internally calculated PEC. In case of Master-Receiver, a NACK must follow the PEC whatever the check result. The PEC must

be set before the ACK of the CRC reception in slave mode. It must be set when the ACK is set low in master mode.

- A PECERR error flag/interrupt is also available in the I2C_SR1 register.
- If DMA and PEC calculation are both enabled:-
  - In transmission: when the I^2C interface receives an EOT signal from the DMA controller, it automatically sends a PEC after the last byte.
  - In reception: when the I^2C interface receives an EOT_1 signal from the DMA controller, it will automatically consider the next byte as a PEC and will check it. A DMA request is generated after PEC reception.
- To allow intermediate PEC transfers, a control bit is available in the I2C_CR2 register (LAST bit) to determine if it is really the last DMA transfer or not. If it is the last DMA request for a master receiver, a NACK is automatically sent after the last received byte.
- PEC calculation is corrupted by an arbitration loss.

27.4 I^2C interrupts

The table below gives the list of I^2C interrupt requests.

Table 124. I^2C Interrupt requests

Interrupt event	Event flag	Enable control bit
Start bit sent (Master)	SB	ITEVFEN
Address sent (Master) or Address matched (Slave)	ADDR	
10-bit header sent (Master)	ADD10	
Stop received (Slave)	STOPF	
Data byte transfer finished	BTF	
Receive buffer not empty	RxNE	ITEVFEN and ITBUFEN
Transmit buffer empty	TxE	
Bus error	BERR	ITERREN
Arbitration loss (Master)	ARLO	
Acknowledge failure	AF	
Overrun/Underrun	OVR	
PEC error	PECERR	
Timeout/Tlow error	TIMEOUT	
SMBus Alert	SMBALERT	

Note: SB, ADDR, ADD10, STOPF, BTF, RxNE and TxE are logically OR-ed on the same interrupt channel.

BERR, ARLO, AF, OVR, PECERR, TIMEOUT and SMBALERT are logically OR-ed on the same interrupt channel.

Figure 245. I²C interrupt mapping diagram

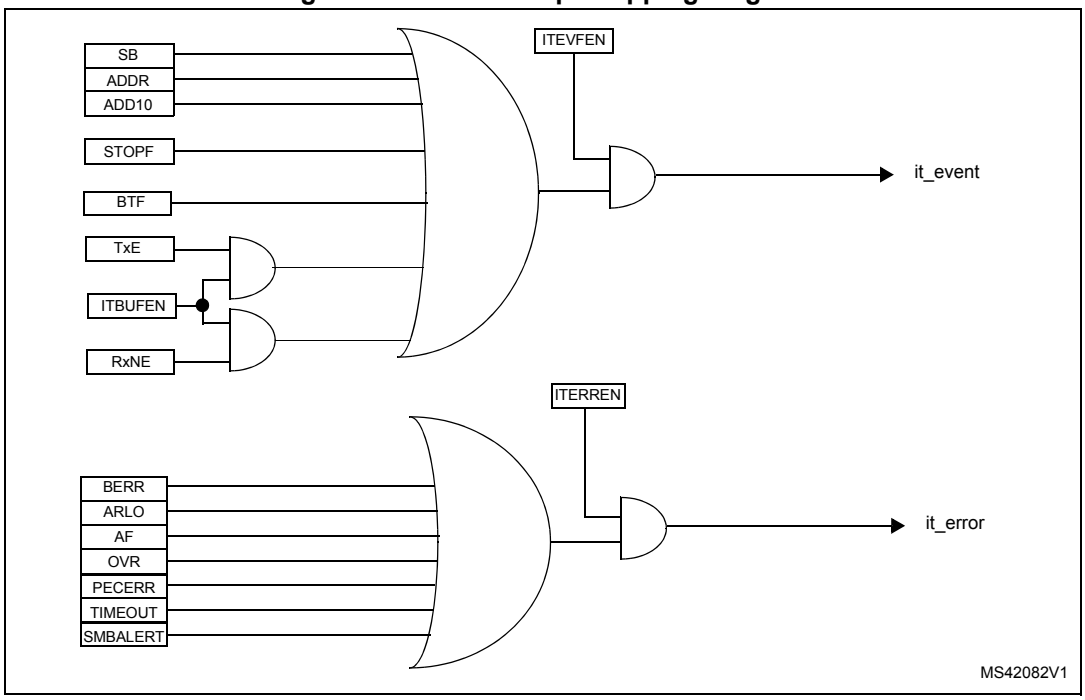

27.5 I²C debug mode

When the microcontroller enters the debug mode (Cortex®-M4 with FPU core halted), the SMBUS timeout either continues to work normally or stops, depending on the DBG_I2Cx_SMBUS_TIMEOUT configuration bits in the DBG module. For more details, refer to *Section 38.16.2: Debug support for timers, watchdog, bxCAN and I²C*.

27.6 I²C registers

Refer to *Section 1.1* for a list of abbreviations used in register descriptions.

The peripheral registers have to be accessed by half-words (16 bits) or words (32 bits).

27.6.1 I²C Control register 1 (I2C_CR1)

Address offset: 0x00
Reset value: 0x0000

15	14	13	12	11	10	9	8	7	6	5	4	3	2	1	0
SWRST	Res.	ALERT	PEC	POS	ACK	STOP	START	NO STRETCH	ENGC	ENPEC	ENARP	SMB TYPE	Res.	SMBUS	PE
rw		rw	rw	rw	rw	rw	rw	rw	rw	rw	rw	rw		rw	rw

Bit 15 **SWRST**: Software reset

When set, the I2C is under reset state. Before resetting this bit, make sure the I2C lines are released and the bus is free.
0: I²C Peripheral not under reset
1: I²C Peripheral under reset state

Note: This bit can be used to reinitialize the peripheral after an error or a locked state. As an example, if the BUSY bit is set and remains locked due to a glitch on the bus, the SWRST bit can be used to exit from this state.

Bit 14 Reserved, must be kept at reset value

Bit 13 **ALERT**: SMBus alert

This bit is set and cleared by software, and cleared by hardware when PE=0.
0: Releases SMBA pin high. Alert Response Address Header followed by NACK.
1: Drives SMBA pin low. Alert Response Address Header followed by ACK.

Bit 12 **PEC**: Packet error checking

This bit is set and cleared by software, and cleared by hardware when PEC is transferred or by a START or Stop condition or when PE=0.
0: No PEC transfer
1: PEC transfer (in Tx or Rx mode)

Note: PEC calculation is corrupted by an arbitration loss.

Bit 11 **POS**: Acknowledge/PEC Position (for data reception)

This bit is set and cleared by software and cleared by hardware when PE=0.
0: ACK bit controls the (N)ACK of the current byte being received in the shift register. The PEC bit indicates that current byte in shift register is a PEC.
1: ACK bit controls the (N)ACK of the next byte which will be received in the shift register. The PEC bit indicates that the next byte in the shift register is a PEC

Note: The POS bit must be used only in 2-byte reception configuration in master mode. It must be configured before data reception starts, as described in the 2-byte reception procedure recommended in Section : Master receiver on page 849.

Bit 10 **ACK**: Acknowledge enable

This bit is set and cleared by software and cleared by hardware when PE=0.
0: No acknowledge returned
1: Acknowledge returned after a byte is received (matched address or data)

Bit 9 **STOP**: Stop generation

The bit is set and cleared by software, cleared by hardware when a Stop condition is detected, set by hardware when a timeout error is detected.
In Master Mode:
0: No Stop generation.
1: Stop generation after the current byte transfer or after the current Start condition is sent.
In Slave mode:
0: No Stop generation.
1: Release the SCL and SDA lines after the current byte transfer.

Bit 8 **START**: Start generation

This bit is set and cleared by software and cleared by hardware when start is sent or PE=0.
In Master Mode:
0: No Start generation
1: Repeated start generation
In Slave mode:
0: No Start generation
1: Start generation when the bus is free

Bit 7 **NOSTRETCH**: Clock stretching disable (Slave mode)

This bit is used to disable clock stretching in slave mode when ADDR or BTF flag is set, until it is reset by software.
0: Clock stretching enabled
1: Clock stretching disabled

Bit 6 **ENGC**: General call enable

0: General call disabled. Address 00h is NACKed.
1: General call enabled. Address 00h is ACKed.

Bit 5 **ENPEC:** PEC enable

0: PEC calculation disabled
1: PEC calculation enabled

Bit 4 **ENARP**: ARP enable

0: ARP disable
1: ARP enable
SMBus Device default address recognized if SMBTYPE=0
SMBus Host address recognized if SMBTYPE=1

Bit 3 **SMBTYPE**: SMBus type

0: SMBus Device
1: SMBus Host

Bit 2 Reserved, must be kept at reset value

Bit 1 **SMBUS**: SMBus mode
0: I^2C mode
1: SMBus mode

Bit 0 **PE**: Peripheral enable
0: Peripheral disable
1: Peripheral enable

Note: If this bit is reset while a communication is on going, the peripheral is disabled at the end of the current communication, when back to IDLE state.
All bit resets due to PE=0 occur at the end of the communication.
In master mode, this bit must not be reset before the end of the communication.

Note: When the STOP, START or PEC bit is set, the software must not perform any write access to I2C_CR1 before this bit is cleared by hardware. Otherwise there is a risk of setting a second STOP, START or PEC request.

27.6.2 I^2C Control register 2 (I2C_CR2)

Address offset: 0x04
Reset value: 0x0000

15	14	13	12	11	10	9	8	7	6	5	4	3	2	1	0
Reserved			LAST	DMAEN	ITBUFEN	ITEVTEN	ITERREN	Reserved		FREQ[5:0]					
			rw	rw	rw	rw	rw			rw	rw	rw	rw	rw	rw

Bits 15:13 Reserved, must be kept at reset value

Bit 12 **LAST**: DMA last transfer
0: Next DMA EOT is not the last transfer
1: Next DMA EOT is the last transfer

Note: This bit is used in master receiver mode to permit the generation of a NACK on the last received data.

Bit 11 **DMAEN**: DMA requests enable
0: DMA requests disabled
1: DMA request enabled when TxE=1 or RxNE =1

Bit 10 **ITBUFEN**: Buffer interrupt enable
0: TxE = 1 or RxNE = 1 does not generate any interrupt.
1: TxE = 1 or RxNE = 1 generates Event Interrupt (whatever the state of DMAEN)

Bit 9 **ITEVTEN**: Event interrupt enable

0: Event interrupt disabled
1: Event interrupt enabled
This interrupt is generated when:

- SB = 1 (Master)
- ADDR = 1 (Master/Slave)
- ADD10= 1 (Master)
- STOPF = 1 (Slave)
- BTF = 1 with no TxE or RxNE event
- TxE event to 1 if ITBUFEN = 1
- RxNE event to 1if ITBUFEN = 1

Bit 8 **ITERREN**: Error interrupt enable

0: Error interrupt disabled
1: Error interrupt enabled
This interrupt is generated when:

- BERR = 1
- ARLO = 1
- AF = 1
- OVR = 1
- PECERR = 1
- TIMEOUT = 1
- SMBALERT = 1

Bits 7:6 Reserved, must be kept at reset value

Bits 5:0 **FREQ[5:0]**: Peripheral clock frequency

The FREQ bits must be configured with the APB clock frequency value (I2C peripheral connected to APB). The FREQ field is used by the peripheral to generate data setup and hold times compliant with the I2C specifications. The minimum allowed frequency is 2 MHz, the maximum frequency is limited by the maximum APB frequency and cannot exceed 50 MHz (peripheral intrinsic maximum limit).

0b000000: Not allowed
0b000001: Not allowed
0b000010: 2 MHz
...
0b110010: 50 MHz
Higher than 0b100100: Not allowed

27.6.3 I²C Own address register 1 (I2C_OAR1)

Address offset: 0x08
Reset value: 0x0000

15	14	13	12	11	10	9	8	7	6	5	4	3	2	1	0
ADD MODE	Reserved					ADD[9:8]		ADD[7:1]							ADD0
rw						rw	rw	rw	rw	rw	rw	rw	rw	rw	rw

Bit 15 **ADDMODE** Addressing mode (slave mode)
0: 7-bit slave address (10-bit address not acknowledged)
1: 10-bit slave address (7-bit address not acknowledged)

Bit 14 Should always be kept at 1 by software.

Bits 13:10 Reserved, must be kept at reset value

Bits 9:8 **ADD[9:8]**: Interface address
7-bit addressing mode: don't care
10-bit addressing mode: bits9:8 of address

Bits 7:1 **ADD[7:1]**: Interface address
bits 7:1 of address

Bit 0 **ADD0**: Interface address
7-bit addressing mode: don't care
10-bit addressing mode: bit 0 of address

27.6.4 I²C Own address register 2 (I2C_OAR2)

Address offset: 0x0C
Reset value: 0x0000

15	14	13	12	11	10	9	8	7	6	5	4	3	2	1	0
Reserved								ADD2[7:1]							ENDUAL
								rw	rw	rw	rw	rw	rw	rw	rw

Bits 15:8 Reserved, must be kept at reset value

Bits 7:1 **ADD2[7:1]**: Interface address
bits 7:1 of address in dual addressing mode

Bit 0 **ENDUAL**: Dual addressing mode enable
0: Only OAR1 is recognized in 7-bit addressing mode
1: Both OAR1 and OAR2 are recognized in 7-bit addressing mode

27.6.5 I²C Data register (I2C_DR)

Address offset: 0x10
Reset value: 0x0000

15	14	13	12	11	10	9	8	7	6	5	4	3	2	1	0
Reserved								DR[7:0]							
								rw	rw	rw	rw	rw	rw	rw	rw

Bits 15:8 Reserved, must be kept at reset value

Bits 7:0 **DR[7:0]** 8-bit data register

Byte received or to be transmitted to the bus.

– Transmitter mode: Byte transmission starts automatically when a byte is written in the DR register. A continuous transmit stream can be maintained if the next data to be transmitted is put in DR once the transmission is started (TxE=1)

– Receiver mode: Received byte is copied into DR (RxNE=1). A continuous transmit stream can be maintained if DR is read before the next data byte is received (RxNE=1).

Note: In slave mode, the address is not copied into DR.

Write collision is not managed (DR can be written if TxE=0).

If an ARLO event occurs on ACK pulse, the received byte is not copied into DR and so cannot be read.

27.6.6 I²C Status register 1 (I2C_SR1)

Address offset: 0x14
Reset value: 0x0000

15	14	13	12	11	10	9	8	7	6	5	4	3	2	1	0
SMB ALERT	TIME OUT	Res.	PEC ERR	OVR	AF	ARLO	BERR	TxE	RxNE	Res.	STOPF	ADD10	BTF	ADDR	SB
rc_w0	rc_w0		rc_w0	rc_w0	rc_w0	rc_w0	rc_w0	r	r		r	r	r	r	r

Bit 15 **SMBALERT**: SMBus alert

In SMBus host mode:
0: no SMBALERT
1: SMBALERT event occurred on pin
In SMBus slave mode:
0: no SMBALERT response address header
1: SMBALERT response address header to SMBALERT LOW received

– Cleared by software writing 0, or by hardware when PE=0.

Bit 14 **TIMEOUT**: Timeout or Tlow error

0: No timeout error
1: SCL remained LOW for 25 ms (Timeout)
or
Master cumulative clock low extend time more than 10 ms (Tlow:mext)
or
Slave cumulative clock low extend time more than 25 ms (Tlow:sext)

– When set in slave mode: slave resets the communication and lines are released by hardware
– When set in master mode: Stop condition sent by hardware
– Cleared by software writing 0, or by hardware when PE=0.

Note: This functionality is available only in SMBus mode.

Bit 13 Reserved, must be kept at reset value

Bit 12 **PECERR**: PEC Error in reception

0: no PEC error: receiver returns ACK after PEC reception (if ACK=1)
1: PEC error: receiver returns NACK after PEC reception (whatever ACK)

– Cleared by software writing 0, or by hardware when PE=0.

Note: When the received CRC is wrong, PECERR is not set in slave mode if the PEC control bit is not set before the end of the CRC reception. Nevertheless, reading the PEC value determines whether the received CRC is right or wrong.

Bit 11 **OVR**: Overrun/Underrun

0: No overrun/underrun
1: Overrun or underrun

– Set by hardware in slave mode when NOSTRETCH=1 and:
– In reception when a new byte is received (including ACK pulse) and the DR register has not been read yet. New received byte is lost.
– In transmission when a new byte should be sent and the DR register has not been written yet. The same byte is sent twice.
– Cleared by software writing 0, or by hardware when PE=0.

Note: If the DR write occurs very close to SCL rising edge, the sent data is unspecified and a hold timing error occurs

Bit 10 **AF**: Acknowledge failure

0: No acknowledge failure
1: Acknowledge failure

– Set by hardware when no acknowledge is returned.
– Cleared by software writing 0, or by hardware when PE=0.

Bit 9 **ARLO**: Arbitration lost (master mode)

0: No Arbitration Lost detected
1: Arbitration Lost detected
Set by hardware when the interface loses the arbitration of the bus to another master

– Cleared by software writing 0, or by hardware when PE=0.

After an ARLO event the interface switches back automatically to Slave mode (MSL=0).

Note: In SMBUS, the arbitration on the data in slave mode occurs only during the data phase, or the acknowledge transmission (not on the address acknowledge).

Bit 8 **BERR**: Bus error

0: No misplaced Start or Stop condition
1: Misplaced Start or Stop condition

– Set by hardware when the interface detects an SDA rising or falling edge while SCL is high, occurring in a non-valid position during a byte transfer.
– Cleared by software writing 0, or by hardware when PE=0.

Bit 7 **TxE**: Data register empty (transmitters)

0: Data register not empty
1: Data register empty

– Set when DR is empty in transmission. TxE is not set during address phase.
– Cleared by software writing to the DR register or by hardware after a start or a stop condition or when PE=0.

TxE is not set if either a NACK is received, or if next byte to be transmitted is PEC (PEC=1)

Note: TxE is not cleared by writing the first data being transmitted, or by writing data when BTF is set, as in both cases the data register is still empty.

Bit 6 **RxNE**: Data register not empty (receivers)

0: Data register empty
1: Data register not empty

– Set when data register is not empty in receiver mode. RxNE is not set during address phase.
– Cleared by software reading or writing the DR register or by hardware when PE=0.

RxNE is not set in case of ARLO event.

Note: RxNE is not cleared by reading data when BTF is set, as the data register is still full.

Bit 5 Reserved, must be kept at reset value

Bit 4 **STOPF**: Stop detection (slave mode)

0: No Stop condition detected
1: Stop condition detected

– Set by hardware when a Stop condition is detected on the bus by the slave after an acknowledge (if ACK=1).
– Cleared by software reading the SR1 register followed by a write in the CR1 register, or by hardware when PE=0

Note: The STOPF bit is not set after a NACK reception.
It is recommended to perform the complete clearing sequence (READ SR1 then WRITE CR1) after the STOPF is set. Refer to Figure 242.

Bit 3 **ADD10**: 10-bit header sent (Master mode)

0: No ADD10 event occurred.
1: Master has sent first address byte (header).

– Set by hardware when the master has sent the first byte in 10-bit address mode.
– Cleared by software reading the SR1 register followed by a write in the DR register of the second address byte, or by hardware when PE=0.

Note: ADD10 bit is not set after a NACK reception

Bit 2 **BTF**: Byte transfer finished

0: Data byte transfer not done
1: Data byte transfer succeeded

– Set by hardware when NOSTRETCH=0 and:
– In reception when a new byte is received (including ACK pulse) and DR has not been read yet (RxNE=1).
– In transmission when a new byte should be sent and DR has not been written yet (TxE=1).
– Cleared by software by either a read or write in the DR register or by hardware after a start or a stop condition in transmission or when PE=0.

Note: The BTF bit is not set after a NACK reception
The BTF bit is not set if next byte to be transmitted is the PEC (TRA=1 in I2C_SR2 register and PEC=1 in I2C_CR1 register)

Bit 1 **ADDR**: Address sent (master mode)/matched (slave mode)

This bit is cleared by software reading SR1 register followed reading SR2, or by hardware when PE=0.

Address matched (Slave)
0: Address mismatched or not received.
1: Received address matched.

– Set by hardware as soon as the received slave address matched with the OAR registers content or a general call or a SMBus Device Default Address or SMBus Host or SMBus Alert is recognized. (when enabled depending on configuration).

Note: In slave mode, it is recommended to perform the complete clearing sequence (READ SR1 then READ SR2) after ADDR is set. Refer to Figure 242.

Address sent (Master)
0: No end of address transmission
1: End of address transmission

– For 10-bit addressing, the bit is set after the ACK of the 2nd byte.
– For 7-bit addressing, the bit is set after the ACK of the byte.

Note: ADDR is not set after a NACK reception

Bit 0 **SB**: Start bit (Master mode)

0: No Start condition
1: Start condition generated.

– Set when a Start condition generated.
– Cleared by software by reading the SR1 register followed by writing the DR register, or by hardware when PE=0

27.6.7 I²C Status register 2 (I2C_SR2)

Address offset: 0x18
Reset value: 0x0000

Note: Reading I2C_SR2 after reading I2C_SR1 clears the ADDR flag, even if the ADDR flag was set after reading I2C_SR1. Consequently, I2C_SR2 must be read only when ADDR is found set in I2C_SR1 or when the STOPF bit is cleared.

15	14	13	12	11	10	9	8	7	6	5	4	3	2	1	0
PEC[7:0]								DUALF	SMB HOST	SMBDE FAULT	GEN CALL	Res.	TRA	BUSY	MSL
r	r	r	r	r	r	r	r	r	r	r	r		r	r	r

Bits 15:8 **PEC[7:0]** Packet error checking register

This register contains the internal PEC when ENPEC=1.

Bit 7 **DUALF**: Dual flag (Slave mode)

0: Received address matched with OAR1
1: Received address matched with OAR2

– Cleared by hardware after a Stop condition or repeated Start condition, or when PE=0.

Bit 6 **SMBHOST**: SMBus host header (Slave mode)

0: No SMBus Host address
1: SMBus Host address received when SMBTYPE=1 and ENARP=1.

– Cleared by hardware after a Stop condition or repeated Start condition, or when PE=0.

Bit 5 **SMBDEFAULT**: SMBus device default address (Slave mode)

0: No SMBus Device Default address
1: SMBus Device Default address received when ENARP=1

– Cleared by hardware after a Stop condition or repeated Start condition, or when PE=0.

Bit 4 **GENCALL**: General call address (Slave mode)

0: No General Call
1: General Call Address received when ENGC=1

– Cleared by hardware after a Stop condition or repeated Start condition, or when PE=0.

Bit 3 Reserved, must be kept at reset value

Bit 2 **TRA**: Transmitter/receiver

0: Data bytes received
1: Data bytes transmitted

This bit is set depending on the R/W bit of the address byte, at the end of total address phase.

It is also cleared by hardware after detection of Stop condition (STOPF=1), repeated Start condition, loss of bus arbitration (ARLO=1), or when PE=0.

Bit 1 **BUSY**: Bus busy

0: No communication on the bus
1: Communication ongoing on the bus

– Set by hardware on detection of SDA or SCL low
– cleared by hardware on detection of a Stop condition.

It indicates a communication in progress on the bus. This information is still updated when the interface is disabled (PE=0).

Bit 0 **MSL**: Master/slave

0: Slave Mode
1: Master Mode

– Set by hardware as soon as the interface is in Master mode (SB=1).
– Cleared by hardware after detecting a Stop condition on the bus or a loss of arbitration (ARLO=1), or by hardware when PE=0.

Note: Reading I2C_SR2 after reading I2C_SR1 clears the ADDR flag, even if the ADDR flag was set after reading I2C_SR1. Consequently, I2C_SR2 must be read only when ADDR is found set in I2C_SR1 or when the STOPF bit is cleared.

27.6.8 I²C Clock control register (I2C_CCR)

Address offset: 0x1C
Reset value: 0x0000

Note: *f_{PCLK1} must be at least 2 MHz to achieve Sm mode I²C frequencies. It must be at least 4 MHz to achieve Fm mode I²C frequencies. It must be a multiple of 10MHz to reach the 400 kHz maximum I²C Fm mode clock.*

The CCR register must be configured only when the I2C is disabled (PE = 0).

15	14	13	12	11	10	9	8	7	6	5	4	3	2	1	0
F/S	DUTY	Reserved		CCR[11:0]											
rw	rw			rw	rw	rw	rw	rw	rw	rw	rw	rw	rw	rw	rw

Bit 15 **F/S:** I2C master mode selection
0: Sm mode I2C
1: Fm mode I2C

Bit 14 **DUTY:** Fm mode duty cycle
0: Fm mode t_{low}/t_{high} = 2
1: Fm mode t_{low}/t_{high} = 16/9 (see CCR)

Bits 13:12 Reserved, must be kept at reset value

Bits 11:0 **CCR[11:0]:** Clock control register in Fm/Sm mode (Master mode)
Controls the SCL clock in master mode.
Sm mode or SMBus:
$T_{high} = CCR * T_{PCLK1}$
$T_{low} = CCR * T_{PCLK1}$
Fm mode:
If DUTY = 0:
$T_{high} = CCR * T_{PCLK1}$
$T_{low} = 2 * CCR * T_{PCLK1}$
If DUTY = 1: (to reach 400 kHz)
$T_{high} = 9 * CCR * T_{PCLK1}$
$T_{low} = 16 * CCR * T_{PCLK1}$
For instance: in Sm mode, to generate a 100 kHz SCL frequency:
If FREQR = 08, T_{PCLK1} = 125 ns so CCR must be programmed with 0x28
(0x28 <=> 40d x 125 ns = 5000 ns.)

Note: The minimum allowed value is 0x04, except in FAST DUTY mode where the minimum allowed value is 0x01
$t_{high} = t_{r(SCL)} + t_{w(SCLH)}$. See device datasheet for the definitions of parameters.
$t_{low} = t_{f(SCL)} + t_{w(SCLL)}$. See device datasheet for the definitions of parameters.
I2C communication speed, fSCL ~ 1/(thigh + tlow). The real frequency may differ due to the analog noise filter input delay.
The CCR register must be configured only when the I²C is disabled (PE = 0).

27.6.9 I²C TRISE register (I2C_TRISE)

Address offset: 0x20
Reset value: 0x0002

15	14	13	12	11	10	9	8	7	6	5	4	3	2	1	0
Reserved										TRISE[5:0]					
										rw	rw	rw	rw	rw	rw

Bits 15:6 Reserved, must be kept at reset value

Bits 5:0 **TRISE[5:0]**: Maximum rise time in Fm/Sm mode (Master mode)

These bits should provide the maximum duration of the SCL feedback loop in master mode. The purpose is to keep a stable SCL frequency whatever the SCL rising edge duration.

These bits must be programmed with the maximum SCL rise time given in the I²C bus specification, incremented by 1.

For instance: in Sm mode, the maximum allowed SCL rise time is 1000 ns.

If, in the I2C_CR2 register, the value of FREQ[5:0] bits is equal to 0x08 and T_{PCLK1} = 125 ns therefore the TRISE[5:0] bits must be programmed with 09h.

(1000 ns / 125 ns = 8 + 1)

The filter value can also be added to TRISE[5:0].

If the result is not an integer, TRISE[5:0] must be programmed with the integer part, in order to respect the t_{HIGH} parameter.

Note: TRISE[5:0] must be configured only when the I2C is disabled (PE = 0).

27.6.10 I²C FLTR register (I2C_FLTR)

Address offset: 0x24

Reset value: 0x0000

The I2C_FLTR is available on STM32F42xxx and STM32F43xxx only.

15	14	13	12	11	10	9	8	7	6	5	4	3	2	1	0
Reserved											ANOFF	DNF[3:0]			
											rw	rw	rw	rw	rw

Bits 15:5 Reserved, must be kept at reset value

Bit 4 **ANOFF**: Analog noise filter OFF

0: Analog noise filter enable

1: Analog noise filter disable

Note: ANOFF must be configured only when the I2C is disabled (PE = 0).

Bits 3:0 **DNF[3:0]**: Digital noise filter

These bits are used to configure the digital noise filter on SDA and SCL inputs. The digital filter will suppress the spikes with a length of up to DNF[3:0] * TPCLK1.

0000: Digital noise filter disable

0001: Digital noise filter enabled and filtering capability up to 1* TPCLK1.

...

1111: Digital noise filter enabled and filtering capability up to 15* TPCLK1.

Note: DNF[3:0] must be configured only when the I2C is disabled (PE = 0). If the analog filter is also enabled, the digital filter is added to the analog filter.

27.6.11 I²C register map

The table below provides the I²C register map and reset values.

Table 125. I²C register map and reset values

Offset	Register	31	30	29	28	27	26	25	24	23	22	21	20	19	18	17	16	15	14	13	12	11	10	9	8	7	6	5	4	3	2	1	0
0x00	I2C_CR1	Reserved																SWRST	Reserved	ALERT	PEC	POS	ACK	STOP	START	NOSTRETCH	ENGC	ENPEC	ENARP	SMBTYPE	Reserved	SMBUS	PE
	Reset value																	0		0	0	0	0	0	0	0	0	0	0	0		0	0
0x04	I2C_CR2	Reserved																			LAST	DMAEN	ITBUFEN	ITEVTEN	ITERREN	Reserved		FREQ[5:0]					
	Reset value																				0	0	0	0	0			0	0	0	0	0	0
0x08	I2C_OAR1	Reserved																ADDMODE	Reserved					ADD[9:8]		ADD[7:1]							ADD0
	Reset value																	0						0	0	0	0	0	0	0	0	0	0
0x0C	I2C_OAR2	Reserved																								ADD2[7:1]							ENDUAL
	Reset value																									0	0	0	0	0	0	0	0
0x10	I2C_DR	Reserved																								DR[7:0]							
	Reset value																									0	0	0	0	0	0	0	0
0x14	I2C_SR1	Reserved																SMBALERT	TIMEOUT	Reserved	PECERR	OVR	AF	ARLO	BERR	TxE	RxNE	Reserved	STOPF	ADD10	BTF	ADDR	SB
	Reset value																	0	0		0	0	0	0	0	0	0		0	0	0	0	0
0x18	I2C_SR2	Reserved																PEC[7:0]								DUALF	SMBHOST	SMBDEFAUL	GENCALL	Reserved	TRA	BUSY	MSL
	Reset value																	0	0	0	0	0	0	0	0	0	0	0	0		0	0	0
0x1C	I2C_CCR	Reserved																F/S	DUTY	Reserved		CCR[11:0]											
	Reset value																	0	0		0	0	0	0	0	0	0	0	0	0	0	0	0
0x20	I2C_TRISE	Reserved																										TRISE[5:0]					
	Reset value																											0	0	0	0	1	0
0x24	I2C_FLTR	Reserved																											ANOFF	DNF[3:0]			
	Reset value																												0	0	0	0	0

Refer to *Section 2.3: Memory map* for the register boundary addresses table.

28 Serial peripheral interface (SPI)

This section applies to the whole STM32F4xx family, unless otherwise specified.

28.1 SPI introduction

The SPI interface provides two main functions, supporting either the SPI protocol or the I^2S audio protocol. By default, it is the SPI function that is selected. It is possible to switch the interface from SPI to I^2S by software.

The serial peripheral interface (SPI) allows half/ full-duplex, synchronous, serial communication with external devices. The interface can be configured as the master and in this case it provides the communication clock (SCK) to the external slave device. The interface is also capable of operating in multimaster configuration.

It may be used for a variety of purposes, including simplex synchronous transfers on two lines with a possible bidirectional data line or reliable communication using CRC checking.

The I^2S is also a synchronous serial communication interface. It can address four different audio standards including the I^2S Philips standard, the MSB- and LSB-justified standards, and the PCM standard. It can operate as a slave or a master device in full-duplex mode (using 4 pins) or in half-duplex mode (using 3 pins). Master clock can be provided by the interface to an external slave component when the I^2S is configured as the communication master.

Warning: **Since some SPI1 and SPI3/I2S3 pins may be mapped onto some pins used by the JTAG interface (SPI1_NSS onto JTDI, SPI3_NSS/I2S3_WS onto JTDI and SPI3_SCK/I2S3_CK onto JTDO), you may either:**
– map SPI/I2S onto other pins
– disable the JTAG and use the SWD interface prior to configuring the pins listed as SPI I/Os (when debugging the application) or
– disable both JTAG/SWD interfaces (for standalone applications).
For more information on the configuration of the JTAG/SWD interface pins, please refer to *Section 8.3.2: I/O pin multiplexer and mapping*.

28.2 SPI and I^{2}S main features

28.2.1 SPI features

- Full-duplex synchronous transfers on three lines
- Simplex synchronous transfers on two lines with or without a bidirectional data line
- 8- or 16-bit transfer frame format selection
- Master or slave operation
- Multimaster mode capability
- 8 master mode baud rate prescalers (f_{PCLK}/2 max.)
- Slave mode frequency (f_{PCLK}/2 max)
- Faster communication for both master and slave
- NSS management by hardware or software for both master and slave: dynamic change of master/slave operations
- Programmable clock polarity and phase
- Programmable data order with MSB-first or LSB-first shifting
- Dedicated transmission and reception flags with interrupt capability
- SPI bus busy status flag
- SPI TI mode
- Hardware CRC feature for reliable communication:
  - CRC value can be transmitted as last byte in Tx mode
  - Automatic CRC error checking for last received byte
- Master mode fault, overrun and CRC error flags with interrupt capability
- 1-byte transmission and reception buffer with DMA capability: Tx and Rx requests

28.2.2 I^2S features

- Full duplex communication
- Half-duplex communication (only transmitter or receiver)
- Master or slave operations
- 8-bit programmable linear prescaler to reach accurate audio sample frequencies (from 8 kHz to 192 kHz)
- Data format may be 16-bit, 24-bit or 32-bit
- Packet frame is fixed to 16-bit (16-bit data frame) or 32-bit (16-bit, 24-bit, 32-bit data frame) by audio channel
- Programmable clock polarity (steady state)
- Underrun flag in slave transmission mode, overrun flag in reception mode (master and slave), and Frame Error flag in reception and transmission mode (slave only)
- 16-bit register for transmission and reception with one data register for both channel sides
- Supported I^2S protocols:
  - I^2S Phillps standard
  - MSB-justified standard (left-justified)
  - LSB-justified standard (right-justified)
  - PCM standard (with short and long frame synchronization on 16-bit channel frame or 16-bit data frame extended to 32-bit channel frame)
- Data direction is always MSB first
- DMA capability for transmission and reception (16-bit wide)
- Master clock may be output to drive an external audio component. Ratio is fixed at $256 \times F_S$ (where F_S is the audio sampling frequency)
- Both I^2S (I2S2 and I2S3) have a dedicated PLL (PLLI2S) to generate an even more accurate clock.
- I^2S (I2S2 and I2S3) clock can be derived from an external clock mapped on the I2S_CKIN pin.

28.3 SPI functional description

28.3.1 General description

The block diagram of the SPI is shown in *Figure 246*.

Figure 246. SPI block diagram

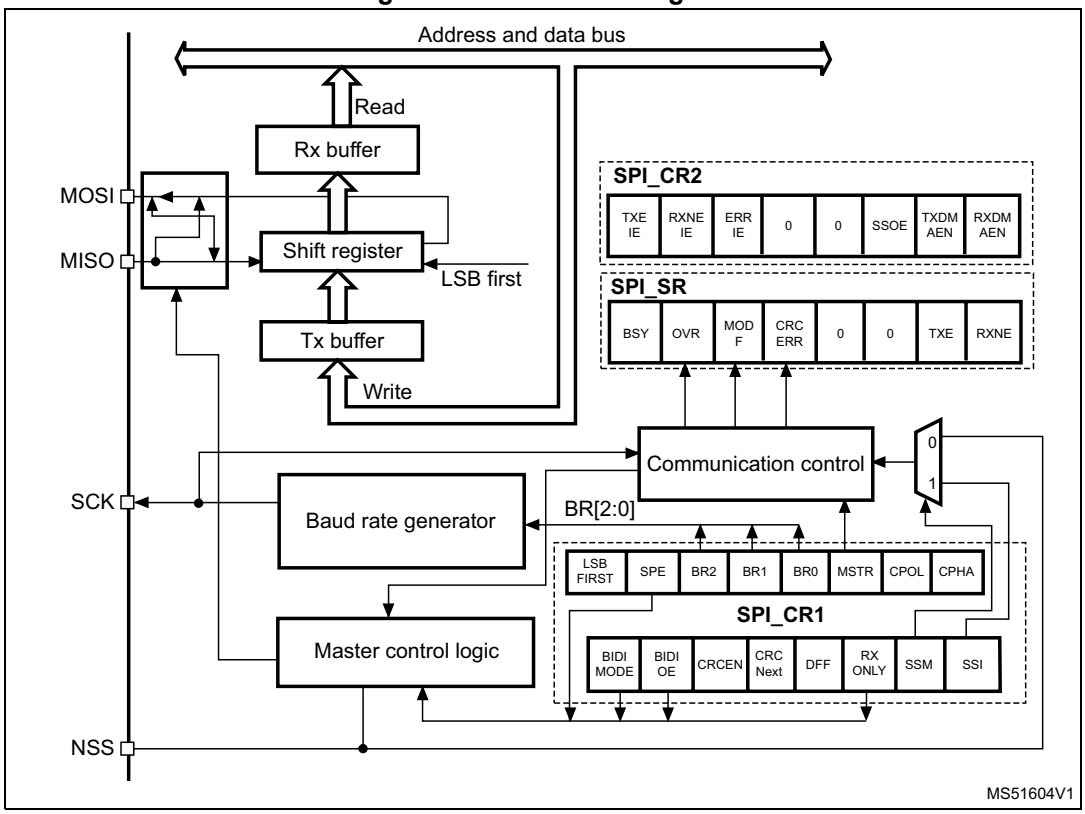

Usually, the SPI is connected to external devices through four pins:

- MISO: Master In / Slave Out data. This pin can be used to transmit data in slave mode and receive data in master mode.
- MOSI: Master Out / Slave In data. This pin can be used to transmit data in master mode and receive data in slave mode.
- SCK: Serial Clock output for SPI masters and input for SPI slaves.
- NSS: Slave select. This is an optional pin to select a slave device. This pin acts as a ‘chip select’ to let the SPI master communicate with slaves individually and to avoid contention on the data lines. Slave NSS inputs can be driven by standard IO ports on the master device. The NSS pin may also be used as an output if enabled (SSOE bit) and driven low if the SPI is in master configuration. In this manner, all NSS pins from devices connected to the Master NSS pin see a low level and become slaves when they are configured in NSS hardware mode. When configured in master mode with NSS configured as an input (MSTR=1 and SSOE=0) and if NSS is pulled low, the SPI enters the master mode fault state: the MSTR bit is automatically cleared and the device is configured in slave mode (refer to *Section 28.3.10*).

A basic example of interconnections between a single master and a single slave is illustrated in *Figure 247*.

Figure 247. Single master/ single slave application

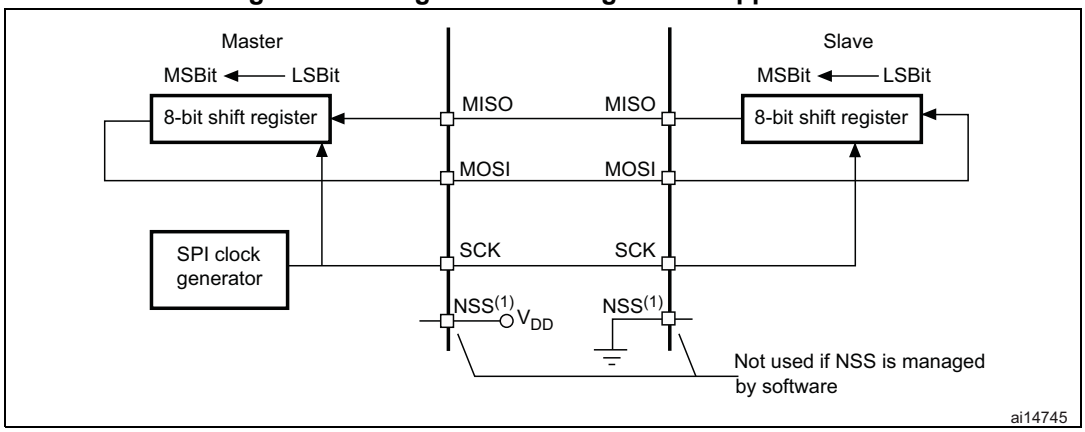

1. Here, the NSS pin is configured as an input.

The MOSI pins are connected together and the MISO pins are connected together. In this way data is transferred serially between master and slave (most significant bit first).

The communication is always initiated by the master. When the master device transmits data to a slave device via the MOSI pin, the slave device responds via the MISO pin. This implies full-duplex communication with both data out and data in synchronized with the same clock signal (which is provided by the master device via the SCK pin).

Slave select (NSS) pin management

Hardware or software slave select management can be set using the SSM bit in the SPI_CR1 register.

- Software NSS management (SSM = 1)

  The slave select information is driven internally by the value of the SSI bit in the SPI_CR1 register. The external NSS pin remains free for other application uses.

- Hardware NSS management (SSM = 0)

  Two configurations are possible depending on the NSS output configuration (SSOE bit in register SPI_CR2).

  – NSS output enabled (SSM = 0, SSOE = 1)

    This configuration is used only when the device operates in master mode. The NSS signal is driven low when the master starts the communication and is kept low until the SPI is disabled.

  – NSS output disabled (SSM = 0, SSOE = 0)

    This configuration allows multimaster capability for devices operating in master mode. For devices set as slave, the NSS pin acts as a classical NSS input: the slave is selected when NSS is low and deselected when NSS high.

Clock phase and clock polarity

Four possible timing relationships may be chosen by software, using the CPOL and CPHA bits in the SPI_CR1 register. The CPOL (clock polarity) bit controls the steady state value of the clock when no data is being transferred. This bit affects both master and slave modes. If CPOL is reset, the SCK pin has a low-level idle state. If CPOL is set, the SCK pin has a high-level idle state.

If the CPHA (clock phase) bit is set, the second edge on the SCK pin (falling edge if the CPOL bit is reset, rising edge if the CPOL bit is set) is the MSBit capture strobe. Data are latched on the occurrence of the second clock transition. If the CPHA bit is reset, the first edge on the SCK pin (falling edge if CPOL bit is set, rising edge if CPOL bit is reset) is the MSBit capture strobe. Data are latched on the occurrence of the first clock transition.

The combination of the CPOL (clock polarity) and CPHA (clock phase) bits selects the data capture clock edge.

Figure 248, shows an SPI transfer with the four combinations of the CPHA and CPOL bits. The diagram may be interpreted as a master or slave timing diagram where the SCK pin, the MISO pin, the MOSI pin are directly connected between the master and the slave device.

Note: *Prior to changing the CPOL/CPHA bits the SPI must be disabled by resetting the SPE bit.*

Master and slave must be programmed with the same timing mode.

The idle state of SCK must correspond to the polarity selected in the SPI_CR1 register (by pulling up SCK if CPOL=1 or pulling down SCK if CPOL=0).

The Data Frame Format (8- or 16-bit) is selected through the DFF bit in SPI_CR1 register, and determines the data length during transmission/reception.

Figure 248. Data clock timing diagram

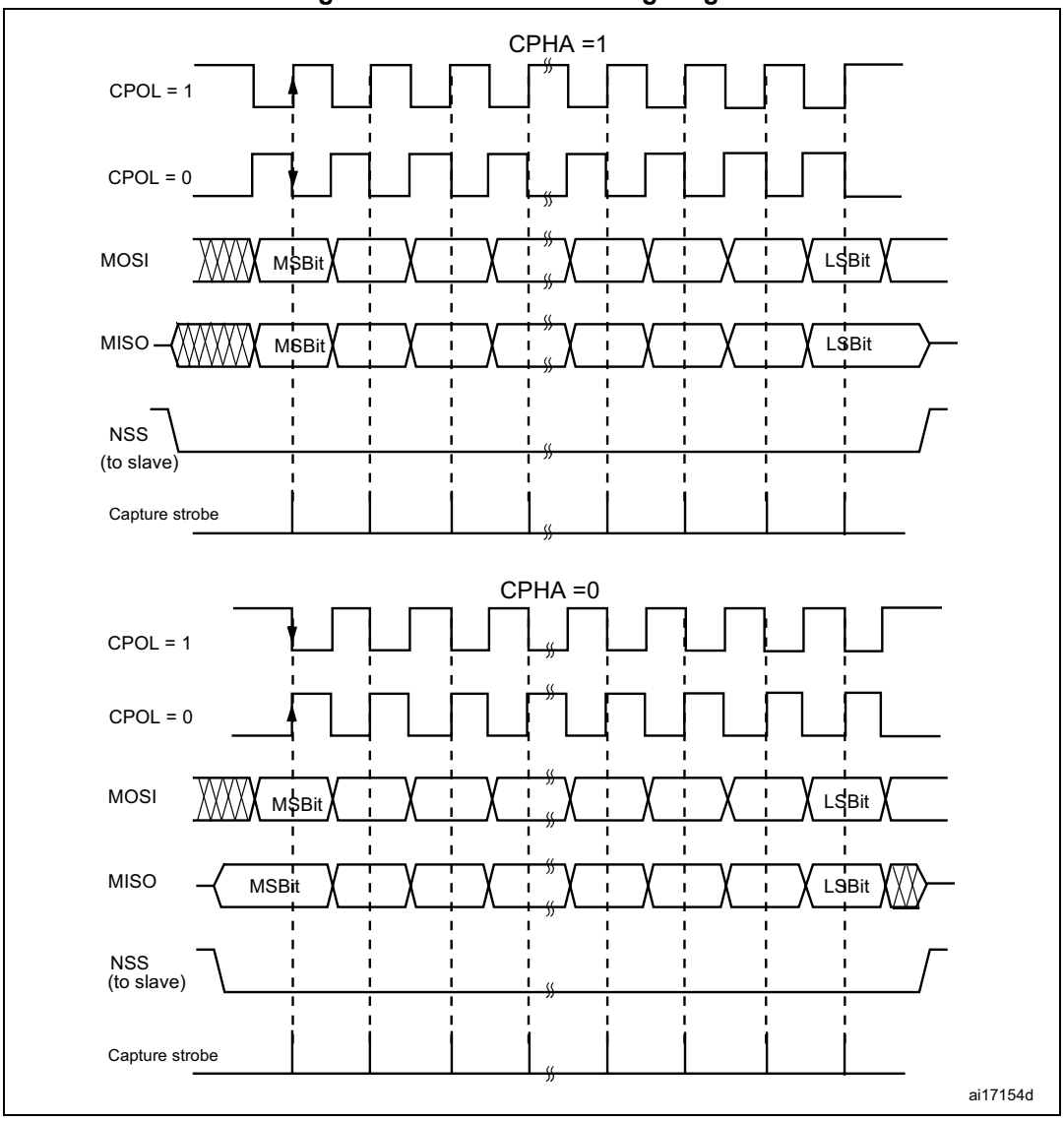

1. These timings are shown with the LSBFIRST bit reset in the SPI_CR1 register.

Data frame format

Data can be shifted out either MSB-first or LSB-first depending on the value of the LSBFIRST bit in the SPI_CR1 Register.

Each data frame is 8 or 16 bits long depending on the size of the data programmed using the DFF bit in the SPI_CR1 register. The selected data frame format is applicable for transmission and/or reception.

28.3.2 Configuring the SPI in slave mode

In the slave configuration, the serial clock is received on the SCK pin from the master device. The value set in the BR[2:0] bits in the SPI_CR1 register, does not affect the data transfer rate.

Note: It is recommended to enable the SPI slave before the master sends the clock. If not, undesired data transmission might occur. The data register of the slave needs to be ready before the first edge of the communication clock or before the end of the ongoing communication. It is mandatory to have the polarity of the communication clock set to the steady state value before the slave and the master are enabled.

Follow the procedure below to configure the SPI in slave mode:

Procedure

1. Set the DFF bit to define 8- or 16-bit data frame format
2. Select the CPOL and CPHA bits to define one of the four relationships between the data transfer and the serial clock (see *Figure 248*). For correct data transfer, the CPOL and CPHA bits must be configured in the same way in the slave device and the master device. This step is not required when the TI mode is selected through the FRF bit in the SPI_CR2 register.
3. The frame format (MSB-first or LSB-first depending on the value of the LSBFIRST bit in the SPI_CR1 register) must be the same as the master device. This step is not required when TI mode is selected.
4. In Hardware mode (refer to *Slave select (NSS) pin management*), the NSS pin must be connected to a low level signal during the complete byte transmit sequence. In NSS software mode, set the SSM bit and clear the SSI bit in the SPI_CR1 register. This step is not required when TI mode is selected.
5. Set the FRF bit in the SPI_CR2 register to select the TI mode protocol for serial communications.
6. Clear the MSTR bit and set the SPE bit (both in the SPI_CR1 register) to assign the pins to alternate functions.

In this configuration the MOSI pin is a data input and the MISO pin is a data output.

Transmit sequence

The data byte is parallel-loaded into the Tx buffer during a write cycle.

The transmit sequence begins when the slave device receives the clock signal and the most significant bit of the data on its MOSI pin. The remaining bits (the 7 bits in 8-bit data frame format, and the 15 bits in 16-bit data frame format) are loaded into the shift-register. The TXE flag in the SPI_SR register is set on the transfer of data from the Tx Buffer to the shift register and an interrupt is generated if the TXEIE bit in the SPI_CR2 register is set.

Receive sequence

For the receiver, when data transfer is complete:

- The Data in shift register is transferred to Rx Buffer and the RXNE flag (SPI_SR register) is set
- An Interrupt is generated if the RXNEIE bit is set in the SPI_CR2 register.

After the last sampling clock edge the RXNE bit is set, a copy of the data byte received in the shift register is moved to the Rx buffer. When the SPI_DR register is read, the SPI peripheral returns this buffered value.

Clearing of the RXNE bit is performed by reading the SPI_DR register.

SPI TI protocol in slave mode

In slave mode, the SPI interface is compatible with the TI protocol. The FRF bit of the SPI_CR2 register can be used to configure the slave SPI serial communications to be compliant with this protocol.

The clock polarity and phase are forced to conform to the TI protocol requirements whatever the values set in the SPI_CR1 register. NSS management is also specific to the TI protocol which makes the configuration of NSS management through the SPI_CR1 and SPI_CR2 registers (such as SSM, SSI, SSOE) transparent for the user.

In Slave mode (*Figure 249: TI mode - Slave mode, single transfer* and *Figure 250: TI mode - Slave mode, continuous transfer*), the SPI baud rate prescaler is used to control the moment when the MISO pin state changes to HI-Z. Any baud rate can be used thus allowing to determine this moment with optimal flexibility. However, the baud rate is generally set to the external master clock baud rate. The time for the MISO signal to become HI-Z ($t_{release}$) depends on internal resynchronizations and on the baud rate value set in through BR[2:0] of SPI_CR1 register. It is given by the formula:

$$\frac{t_{baud_rate}}{2} + 4 \times t_{pclk} < t_{release} < \frac{t_{baud_rate}}{2} + 6 \times t_{pclk}$$

Note: This feature is not available for Motorola SPI communications (FRF bit set to 0).

To detect TI frame errors in Slave transmitter only mode by using the Error interrupt (ERRIE = 1), the SPI must be configured in 2-line unidirectional mode by setting BIDIMODE and BIDIOE to 1 in the SPI_CR1 register. When BIDIMODE is set to 0, OVR is set to 1 because the data register is never read and error interrupt are always generated, while when BIDIMODE is set to 1, data are not received and OVR is never set.

Figure 249. TI mode - Slave mode, single transfer

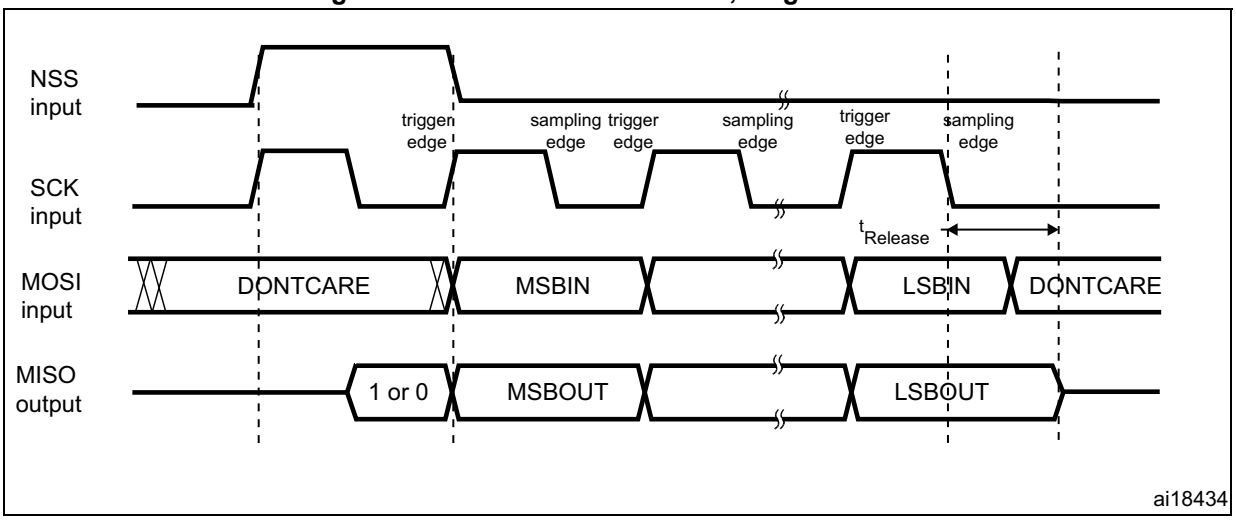

Figure 250. TI mode - Slave mode, continuous transfer

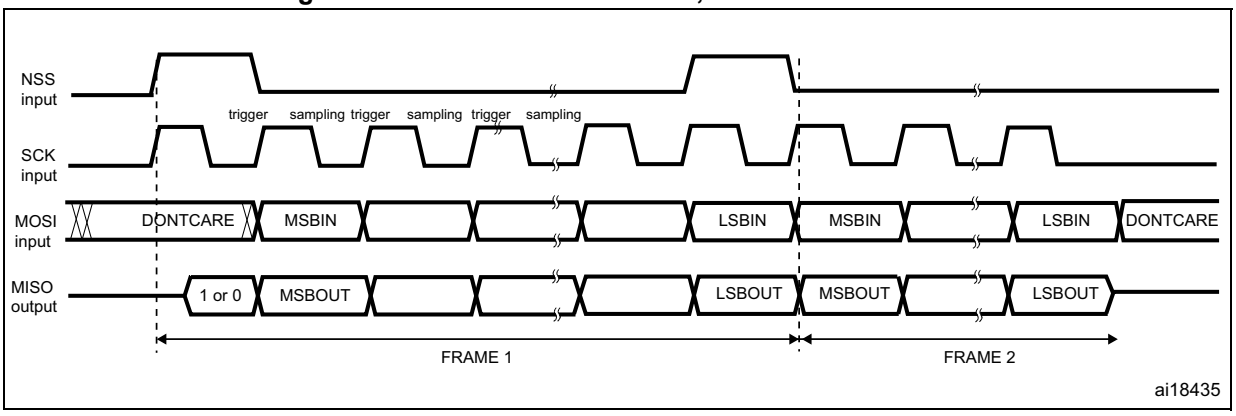

28.3.3 Configuring the SPI in master mode

In the master configuration, the serial clock is generated on the SCK pin.

Procedure

1. Select the BR[2:0] bits to define the serial clock baud rate (see SPI_CR1 register).
2. Select the CPOL and CPHA bits to define one of the four relationships between the data transfer and the serial clock (see *Figure 248*). This step is not required when the TI mode is selected.
3. Set the DFF bit to define 8- or 16-bit data frame format
4. Configure the LSBFIRST bit in the SPI_CR1 register to define the frame format. This step is not required when the TI mode is selected.
5. If the NSS pin is required in input mode, in hardware mode, connect the NSS pin to a high-level signal during the complete byte transmit sequence. In NSS software mode, set the SSM and SSI bits in the SPI_CR1 register. If the NSS pin is required in output mode, the SSOE bit only should be set. This step is not required when the TI mode is selected.
6. Set the FRF bit in SPI_CR2 to select the TI protocol for serial communications.
7. The MSTR and SPE bits must be set (they remain set only if the NSS pin is connected to a high-level signal).

In this configuration the MOSI pin is a data output and the MISO pin is a data input.

Transmit sequence

The transmit sequence begins when a byte is written in the Tx Buffer.

The data byte is parallel-loaded into the shift register (from the internal bus) during the first bit transmission and then shifted out serially to the MOSI pin MSB first or LSB first depending on the LSBFIRST bit in the SPI_CR1 register. The TXE flag is set on the transfer of data from the Tx Buffer to the shift register and an interrupt is generated if the TXEIE bit in the SPI_CR2 register is set.

Receive sequence

For the receiver, when data transfer is complete:

- The data in the shift register is transferred to the RX Buffer and the RXNE flag is set
- An interrupt is generated if the RXNEIE bit is set in the SPI_CR2 register

At the last sampling clock edge the RXNE bit is set, a copy of the data byte received in the shift register is moved to the Rx buffer. When the SPI_DR register is read, the SPI peripheral returns this buffered value.

Clearing the RXNE bit is performed by reading the SPI_DR register.

A continuous transmit stream can be maintained if the next data to be transmitted is put in the Tx buffer once the transmission is started. Note that TXE flag should be ‘1 before any attempt to write the Tx buffer is made.

Note: When a master is communicating with SPI slaves which need to be de-selected between transmissions, the NSS pin must be configured as GPIO or another GPIO must be used and toggled by software.

SPI TI protocol in master mode

In master mode, the SPI interface is compatible with the TI protocol. The FRF bit of the SPI_CR2 register can be used to configure the master SPI serial communications to be compliant with this protocol.

The clock polarity and phase are forced to conform to the TI protocol requirements whatever the values set in the SPI_CR1 register. NSS management is also specific to the TI protocol which makes the configuration of NSS management through the SPI_CR1 and SPI_CR2 registers (SSM, SSI, SSOE) transparent for the user.

Figure 251: TI mode - master mode, single transfer and *Figure 252: TI mode - master mode, continuous transfer*) show the SPI master communication waveforms when the TI mode is selected in master mode.

Figure 251. TI mode - master mode, single transfer

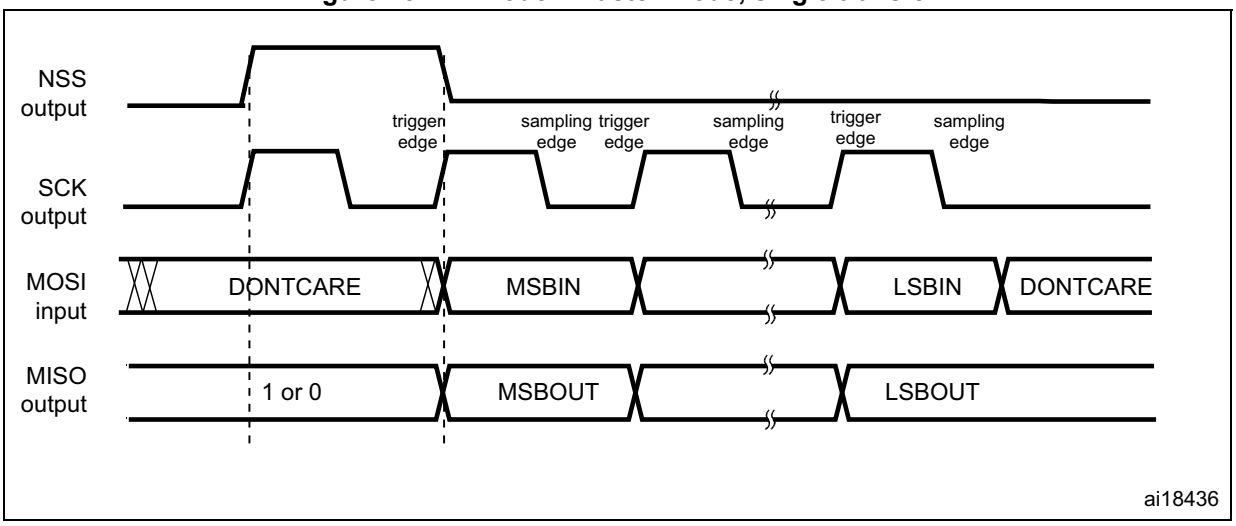

Figure 252. TI mode - master mode, continuous transfer

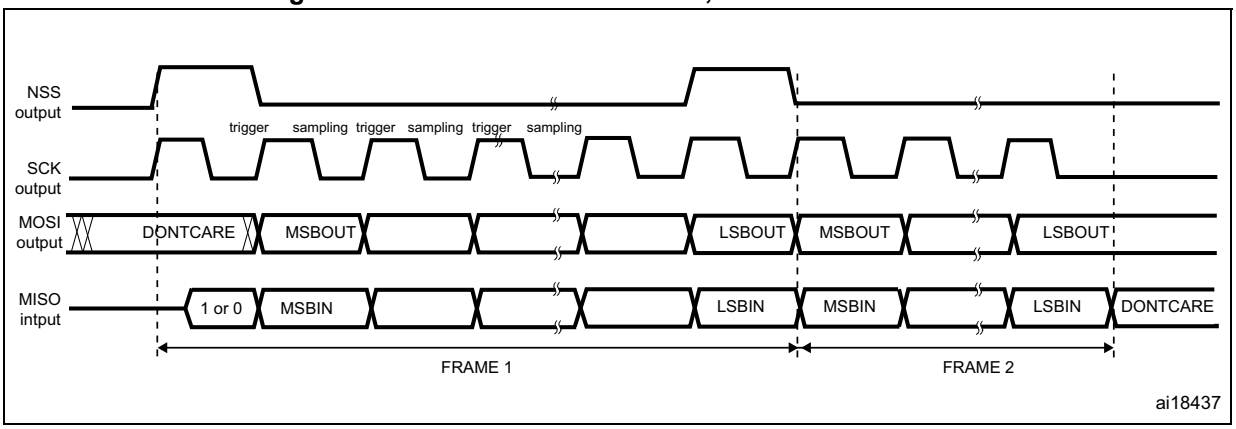

28.3.4 Configuring the SPI for half-duplex communication

The SPI is capable of operating in half-duplex mode in 2 configurations.

- 1 clock and 1 bidirectional data wire
- 1 clock and 1 data wire (receive-only or transmit-only)

1 clock and 1 bidirectional data wire (BIDIMODE = 1)

This mode is enabled by setting the BIDIMODE bit in the SPI_CR1 register. In this mode SCK is used for the clock and MOSI in master or MISO in slave mode is used for data communication. The transfer direction (Input/Output) is selected by the BIDIOE bit in the SPI_CR1 register. When this bit is 1, the data line is output otherwise it is input.

1 clock and 1 unidirectional data wire (BIDIMODE = 0)

In this mode, the application can use the SPI either in transmit-only mode or in receive-only mode.

- Transmit-only mode is similar to full-duplex mode (BIDIMODE=0, RXONLY=0): the data are transmitted on the transmit pin (MOSI in master mode or MISO in slave mode) and the receive pin (MISO in master mode or MOSI in slave mode) can be used as a general-purpose IO. In this case, the application just needs to ignore the Rx buffer (if the data register is read, it does not contain the received value).
- In receive-only mode, the application can disable the SPI output function by setting the RXONLY bit in the SPI_CR1 register. In this case, it frees the transmit IO pin (MOSI in master mode or MISO in slave mode), so it can be used for other purposes.

To start the communication in receive-only mode, configure and enable the SPI:

- In master mode, the communication starts immediately and stops when the SPE bit is cleared and the current reception stops. There is no need to read the BSY flag in this mode. It is always set when an SPI communication is ongoing.
- In slave mode, the SPI continues to receive as long as the NSS is pulled down (or the SSI bit is cleared in NSS software mode) and the SCK is running.

28.3.5 Data transmission and reception procedures

Rx and Tx buffers

In reception, data are received and then stored into an internal Rx buffer while In transmission, data are first stored into an internal Tx buffer before being transmitted.

A read access of the SPI_DR register returns the Rx buffered value whereas a write access to the SPI_DR stores the written data into the Tx buffer.

Start sequence in master mode

- In full-duplex (BIDIMODE=0 and RXONLY=0)
  - The sequence begins when data are written into the SPI_DR register (Tx buffer).
  - The data are then parallel loaded from the Tx buffer into the 8-bit shift register during the first bit transmission and then shifted out serially to the MOSI pin.
  - At the same time, the received data on the MISO pin is shifted in serially to the 8-bit shift register and then parallel loaded into the SPI_DR register (Rx buffer).
- In unidirectional receive-only mode (BIDIMODE=0 and RXONLY=1)
  - The sequence begins as soon as SPE=1
  - Only the receiver is activated and the received data on the MISO pin are shifted in serially to the 8-bit shift register and then parallel loaded into the SPI_DR register (Rx buffer).
- In bidirectional mode, when transmitting (BIDIMODE=1 and BIDIOE=1)
  - The sequence begins when data are written into the SPI_DR register (Tx buffer).
  - The data are then parallel loaded from the Tx buffer into the 8-bit shift register during the first bit transmission and then shifted out serially to the MOSI pin.
  - No data are received.
- In bidirectional mode, when receiving (BIDIMODE=1 and BIDIOE=0)
  - The sequence begins as soon as SPE=1 and BIDIOE=0.
  - The received data on the MOSI pin are shifted in serially to the 8-bit shift register and then parallel loaded into the SPI_DR register (Rx buffer).
  - The transmitter is not activated and no data are shifted out serially to the MOSI pin.

Start sequence in slave mode

- In full-duplex mode (BIDIMODE=0 and RXONLY=0)
  - The sequence begins when the slave device receives the clock signal and the first bit of the data on its MOSI pin. The 7 remaining bits are loaded into the shift register.
  - At the same time, the data are parallel loaded from the Tx buffer into the 8-bit shift register during the first bit transmission, and then shifted out serially to the MISO

pin. The software must have written the data to be sent before the SPI master device initiates the transfer.

- In unidirectional receive-only mode (BIDIMODE=0 and RXONLY=1)
  - The sequence begins when the slave device receives the clock signal and the first bit of the data on its MOSI pin. The 7 remaining bits are loaded into the shift register.
  - The transmitter is not activated and no data are shifted out serially to the MISO pin.
- In bidirectional mode, when transmitting (BIDIMODE=1 and BIDIOE=1)
  - The sequence begins when the slave device receives the clock signal and the first bit in the Tx buffer is transmitted on the MISO pin.
  - The data are then parallel loaded from the Tx buffer into the 8-bit shift register during the first bit transmission and then shifted out serially to the MISO pin. The software must have written the data to be sent before the SPI master device initiates the transfer.
  - No data are received.
- In bidirectional mode, when receiving (BIDIMODE=1 and BIDIOE=0)
  - The sequence begins when the slave device receives the clock signal and the first bit of the data on its MISO pin.
  - The received data on the MISO pin are shifted in serially to the 8-bit shift register and then parallel loaded into the SPI_DR register (Rx buffer).
  - The transmitter is not activated and no data are shifted out serially to the MISO pin.

Handling data transmission and reception

The TXE flag (Tx buffer empty) is set when the data are transferred from the Tx buffer to the shift register. It indicates that the internal Tx buffer is ready to be loaded with the next data. An interrupt can be generated if the TXEIE bit in the SPI_CR2 register is set. Clearing the TXE bit is performed by writing to the SPI_DR register.

Note: The software must ensure that the TXE flag is set to 1 before attempting to write to the Tx buffer. Otherwise, it overwrites the data previously written to the Tx buffer.

The RXNE flag (Rx buffer not empty) is set on the last sampling clock edge, when the data are transferred from the shift register to the Rx buffer. It indicates that data are ready to be read from the SPI_DR register. An interrupt can be generated if the RXNEIE bit in the SPI_CR2 register is set. Clearing the RXNE bit is performed by reading the SPI_DR register.

For some configurations, the BSY flag can be used during the last data transfer to wait until the completion of the transfer.

Full-duplex transmit and receive procedure in master or slave mode (BIDIMODE=0 and RXONLY=0)

The software has to follow this procedure to transmit and receive data (see *Figure 253* and *Figure 254*):

1. Enable the SPI by setting the SPE bit to 1.
2. Write the first data item to be transmitted into the SPI_DR register (this clears the TXE flag).
3. Wait until TXE=1 and write the second data item to be transmitted. Then wait until RXNE=1 and read the SPI_DR to get the first received data item (this clears the RXNE bit). Repeat this operation for each data item to be transmitted/received until the n–1 received data.
4. Wait until RXNE=1 and read the last received data.
5. Wait until TXE=1 and then wait until BSY=0 before disabling the SPI.

This procedure can also be implemented using dedicated interrupt subroutines launched at each rising edges of the RXNE or TXE flag.

Figure 253. TXE/RXNE/BSY behavior in Master / full-duplex mode (BIDIMODE=0 and RXONLY=0) in case of continuous transfers

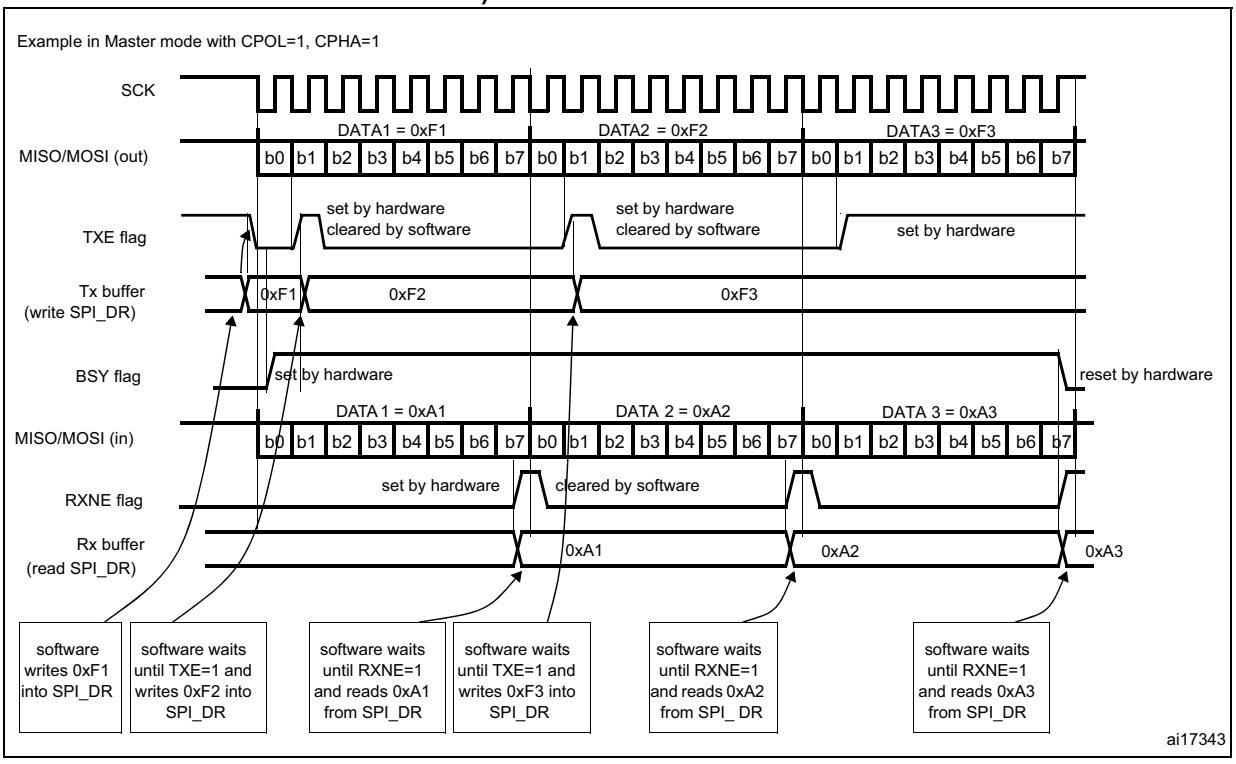

Figure 254. TXE/RXNE/BSY behavior in Slave / full-duplex mode (BIDIMODE=0, RXONLY=0) in case of continuous transfers

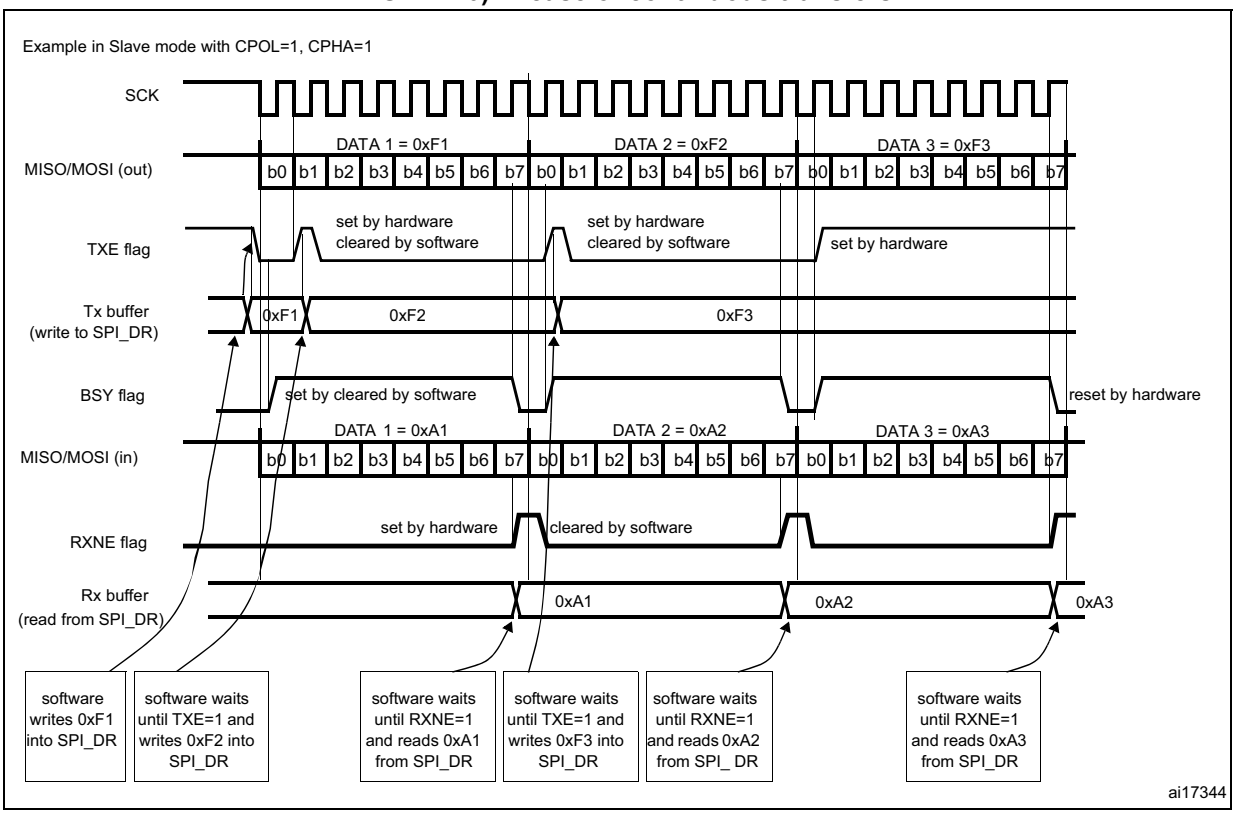

Transmit-only procedure (BIDIMODE=0 RXONLY=0)

In this mode, the procedure can be reduced as described below and the BSY bit can be used to wait until the completion of the transmission (see *Figure 255* and *Figure 256*).

1. Enable the SPI by setting the SPE bit to 1.
2. Write the first data item to send into the SPI_DR register (this clears the TXE bit).
3. Wait until TXE=1 and write the next data item to be transmitted. Repeat this step for each data item to be transmitted.
4. After writing the last data item into the SPI_DR register, wait until TXE=1, then wait until BSY=0, this indicates that the transmission of the last data is complete.

This procedure can be also implemented using dedicated interrupt subroutines launched at each rising edge of the TXE flag.

Note: During discontinuous communications, there is a 2 APB clock period delay between the write operation to SPI_DR and the BSY bit setting. As a consequence, in transmit-only mode, it is mandatory to wait first until TXE is set and then until BSY is cleared after writing the last data.

After transmitting two data items in transmit-only mode, the OVR flag is set in the SPI_SR register since the received data are never read.

Figure 255. TXE/BSY behavior in Master transmit-only mode (BIDIMODE=0 and RXONLY=0) in case of continuous transfers

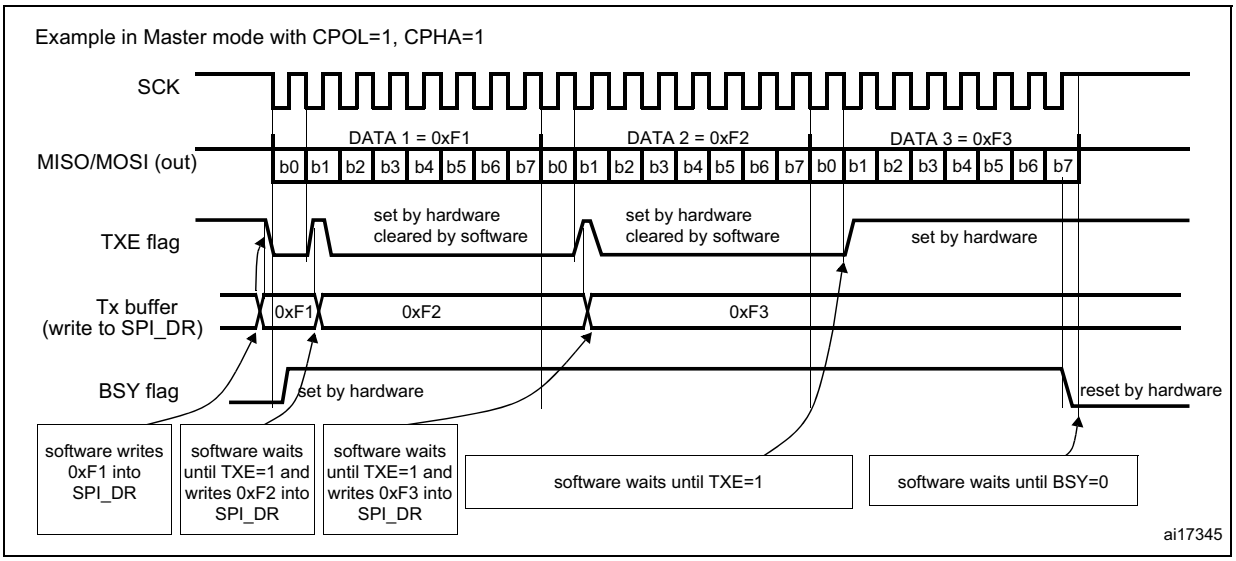

Figure 256. TXE/BSY in Slave transmit-only mode (BIDIMODE=0 and RXONLY=0) in case of continuous transfers

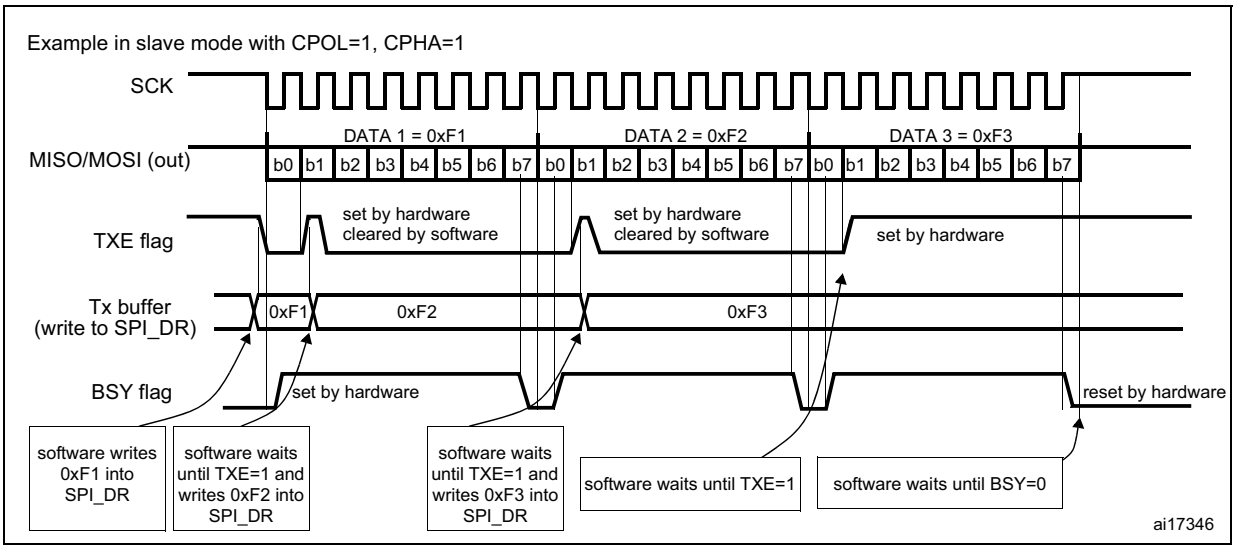

Bidirectional transmit procedure (BIDIMODE=1 and BIDIOE=1)

In this mode, the procedure is similar to the procedure in Transmit-only mode except that the BIDIMODE and BIDIOE bits both have to be set in the SPI_CR2 register before enabling the SPI.

Unidirectional receive-only procedure (BIDIMODE=0 and RXONLY=1)

In this mode, the procedure can be reduced as described below (see *Figure 257*):

1. Set the RXONLY bit in the SPI_CR1 register.
2. Enable the SPI by setting the SPE bit to 1:
   a) In master mode, this immediately activates the generation of the SCK clock, and data are serially received until the SPI is disabled (SPE=0).
   b) In slave mode, data are received when the SPI master device drives NSS low and generates the SCK clock.
3. Wait until RXNE=1 and read the SPI_DR register to get the received data (this clears the RXNE bit). Repeat this operation for each data item to be received.

This procedure can also be implemented using dedicated interrupt subroutines launched at each rising edge of the RXNE flag.

Note: If it is required to disable the SPI after the last transfer, follow the recommendation described in Section 28.3.8.

Figure 257. RXNE behavior in receive-only mode (BIDIRMODE=0 and RXONLY=1) in case of continuous transfers

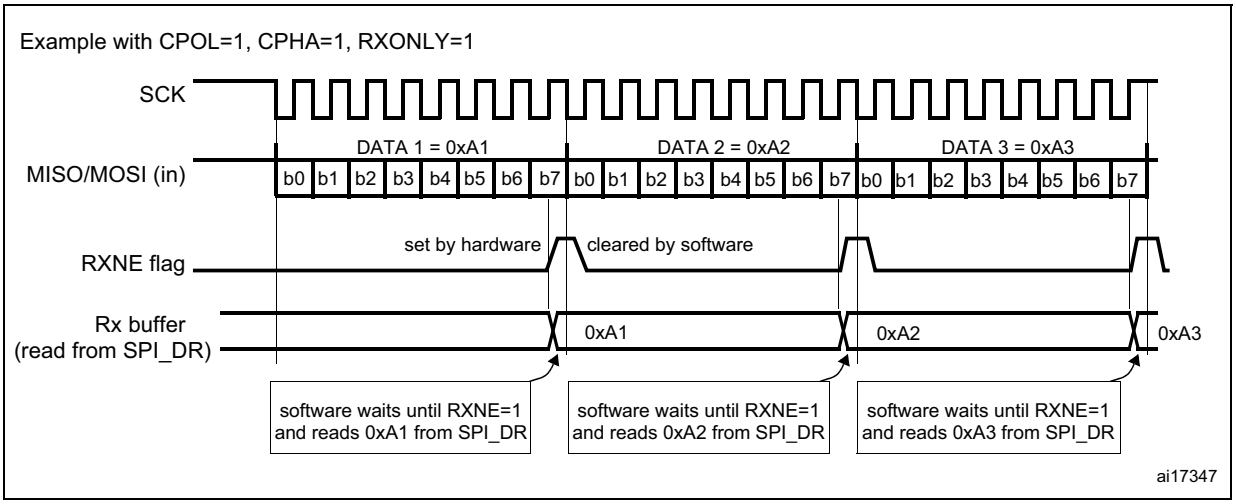

Bidirectional receive procedure (BIDIMODE=1 and BIDIOE=0)

In this mode, the procedure is similar to the Receive-only mode procedure except that the BIDIMODE bit has to be set and the BIDIOE bit cleared in the SPI_CR2 register before enabling the SPI.

Continuous and discontinuous transfers

When transmitting data in master mode, if the software is fast enough to detect each rising edge of TXE (or TXE interrupt) and to immediately write to the SPI_DR register before the ongoing data transfer is complete, the communication is said to be continuous. In this case, there is no discontinuity in the generation of the SPI clock between each data item and the BSY bit is never cleared between each data transfer.

On the contrary, if the software is not fast enough, this can lead to some discontinuities in the communication. In this case, the BSY bit is cleared between each data transmission (see *Figure 258*).

In Master receive-only mode (RXONLY=1), the communication is always continuous and the BSY flag is always read at 1.

In slave mode, the continuity of the communication is decided by the SPI master device. In any case, even if the communication is continuous, the BSY flag goes low between each transfer for a minimum duration of one SPI clock cycle (see *Figure 256*).

Figure 258. TXE/BSY behavior when transmitting (BIDIRMODE=0 and RXONLY=0) in case of discontinuous transfers

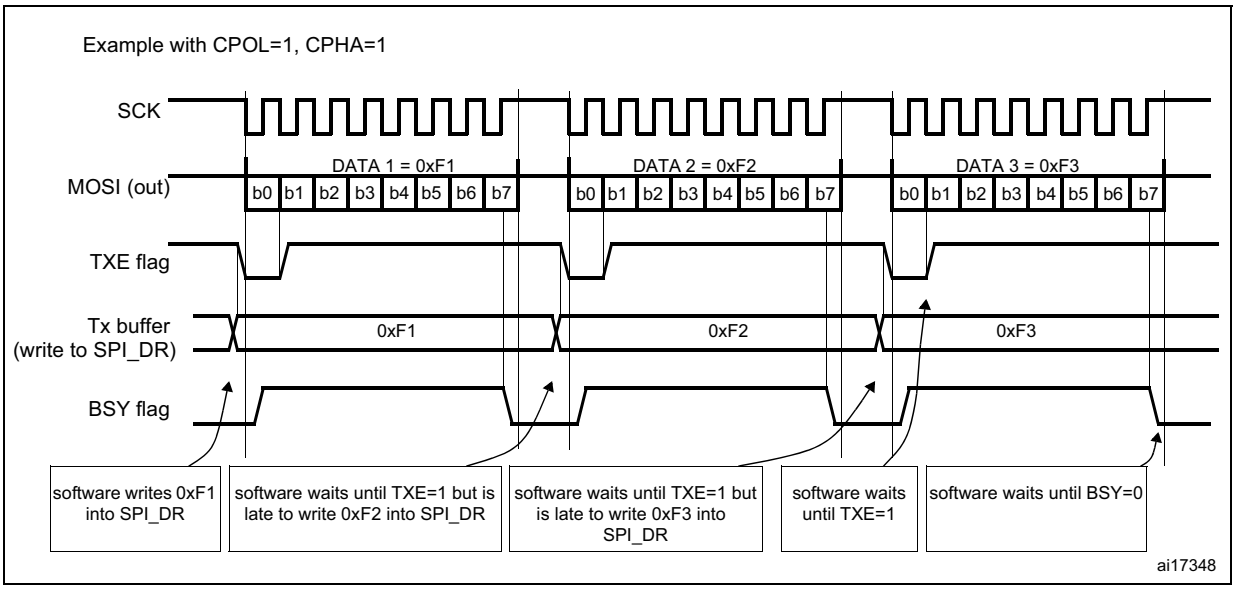

28.3.6 CRC calculation

A CRC calculator has been implemented for communication reliability. Separate CRC calculators are implemented for transmitted data and received data. The CRC is calculated using a programmable polynomial serially on each bit. It is calculated on the sampling clock edge defined by the CPHA and CPOL bits in the SPI_CR1 register.

Note: This SPI offers two kinds of CRC calculation standard which depend directly on the data frame format selected for the transmission and/or reception: 8-bit data (CR8) and 16-bit data (CRC16).

CRC calculation is enabled by setting the CRCEN bit in the SPI_CR1 register. This action resets the CRC registers (SPI_RXCRCR and SPI_TXCRCR). In full duplex or transmitter only mode, when the transfers are managed by the software (CPU mode), it is necessary to write the bit CRCNEXT immediately after the last data to be transferred is written to the SPI_DR. At the end of this last data transfer, the SPI_TXCRCR value is transmitted.

In receive only mode and when the transfers are managed by software (CPU mode), it is necessary to write the CRCNEXT bit after the second last data has been received. The CRC is received just after the last data reception and the CRC check is then performed.

At the end of data and CRC transfers, the CRCERR flag in the SPI_SR register is set if corruption occurs during the transfer.

If data are present in the TX buffer, the CRC value is transmitted only after the transmission of the data byte. During CRC transmission, the CRC calculator is switched off and the register value remains unchanged.

SPI communication using the CRC is possible through the following procedure:

1. Program the CPOL, CPHA, LSBFirst, BR, SSM, SSI and MSTR values.
2. Program the polynomial in the SPI_CRCPR register.
3. Enable the CRC calculation by setting the CRCEN bit in the SPI_CR1 register. This also clears the SPI_RXCRCR and SPI_TXCRCR registers.
4. Enable the SPI by setting the SPE bit in the SPI_CR1 register.
5. Start the communication and sustain the communication until all but one byte or half-word have been transmitted or received.
   - In full duplex or transmitter-only mode, when the transfers are managed by software, when writing the last byte or half word to the Tx buffer, set the CRCNEXT bit in the SPI_CR1 register to indicate that the CRC will be transmitted after the transmission of the last byte.
   - In receiver only mode, set the bit CRCNEXT just after the reception of the second to last data to prepare the SPI to enter in CRC Phase at the end of the reception of the last data. CRC calculation is frozen during the CRC transfer.
6. After the transfer of the last byte or half word, the SPI enters the CRC transfer and check phase. In full duplex mode or receiver-only mode, the received CRC is compared to the SPI_RXCRCR value. If the value does not match, the CRCERR flag in SPI_SR is set and an interrupt can be generated when the ERRIE bit in the SPI_CR2 register is set.

Note: When the SPI is in slave mode, be careful to enable CRC calculation only when the clock is stable, that is, when the clock is in the steady state. If not, a wrong CRC calculation may be done. In fact, the CRC is sensitive to the SCK slave input clock as soon as CRCEN is set, and this, whatever the value of the SPE bit.

With high bitrate frequencies, be careful when transmitting the CRC. As the number of used CPU cycles has to be as low as possible in the CRC transfer phase, it is forbidden to call software functions in the CRC transmission sequence to avoid errors in the last data and CRC reception. In fact, CRCNEXT bit has to be written before the end of the transmission/reception of the last data.

For high bit rate frequencies, it is advised to use the DMA mode to avoid the degradation of the SPI speed performance due to CPU accesses impacting the SPI bandwidth.

When the devices are configured as slaves and the NSS hardware mode is used, the NSS pin needs to be kept low between the data phase and the CRC phase.

When the SPI is configured in slave mode with the CRC feature enabled, CRC calculation takes place even if a high level is applied on the NSS pin. This may happen for example in case of a multislave environment where the communication master addresses slaves alternately.

Between a slave deselection (high level on NSS) and a new slave selection (low level on NSS), the CRC value should be cleared on both master and slave sides in order to resynchronize the master and slave for their respective CRC calculation.

To clear the CRC, follow the procedure below:

1. Disable SPI (SPE = 0)
2. Clear the CRCEN bit
3. Set the CRCEN bit
4. Enable the SPI (SPE = 1)

28.3.7 Status flags

Four status flags are provided for the application to completely monitor the state of the SPI bus.

Tx buffer empty flag (TXE)

When it is set, this flag indicates that the Tx buffer is empty and the next data to be transmitted can be loaded into the buffer. The TXE flag is cleared when writing to the SPI_DR register.

Rx buffer not empty (RXNE)

When set, this flag indicates that there are valid received data in the Rx buffer. It is cleared when SPI_DR is read.

BUSY flag

This BSY flag is set and cleared by hardware (writing to this flag has no effect). The BSY flag indicates the state of the communication layer of the SPI.

When BSY is set, it indicates that the SPI is busy communicating. There is one exception in master mode / bidirectional receive mode (MSTR=1 and BDM=1 and BDOE=0) where the BSY flag is kept low during reception.

The BSY flag is useful to detect the end of a transfer if the software wants to disable the SPI and enter Halt mode (or disable the peripheral clock). This avoids corrupting the last transfer. For this, the procedure described below must be strictly respected.

The BSY flag is also useful to avoid write collisions in a multimaster system.

The BSY flag is set when a transfer starts, with the exception of master mode / bidirectional receive mode (MSTR=1 and BDM=1 and BDOE=0).

It is cleared:

- when a transfer is finished (except in master mode if the communication is continuous)
- when the SPI is disabled
- when a master mode fault occurs (MODF=1)

When communication is not continuous, the BSY flag is low between each communication.

When communication is continuous:

- in master mode, the BSY flag is kept high during all the transfers
- in slave mode, the BSY flag goes low for one SPI clock cycle between each transfer

Note: Do not use the BSY flag to handle each data transmission or reception. It is better to use the TXE and RXNE flags instead.

28.3.8 Disabling the SPI

When a transfer is terminated, the application can stop the communication by disabling the SPI peripheral. This is done by clearing the SPE bit.

For some configurations, disabling the SPI and entering the Halt mode while a transfer is ongoing can cause the current transfer to be corrupted and/or the BSY flag might become unreliable.

To avoid any of those effects, it is recommended to respect the following procedure when disabling the SPI:

In master or slave full-duplex mode (BIDIMODE=0, RXONLY=0)

1. Wait until RXNE=1 to receive the last data
2. Wait until TXE=1
3. Then wait until BSY=0
4. Disable the SPI (SPE=0) and, eventually, enter the Halt mode (or disable the peripheral clock)

In master or slave unidirectional transmit-only mode (BIDIMODE=0, RXONLY=0) or bidirectional transmit mode (BIDIMODE=1, BIDIOE=1)

After the last data is written into the SPI_DR register:

1. Wait until TXE=1
2. Then wait until BSY=0
3. Disable the SPI (SPE=0) and, eventually, enter the Halt mode (or disable the peripheral clock)

In master unidirectional receive-only mode (MSTR=1, BIDIMODE=0, RXONLY=1) or bidirectional receive mode (MSTR=1, BIDIMODE=1, BIDIOE=0)

This case must be managed in a particular way to ensure that the SPI does not initiate a new transfer. The sequence below is valid only for SPI Motorola configuration (FRF bit set to 0):

1. Wait for the second to last occurrence of RXNE=1 (n–1)
2. Then wait for one SPI clock cycle (using a software loop) before disabling the SPI (SPE=0)
3. Then wait for the last RXNE=1 before entering the Halt mode (or disabling the peripheral clock)

When the SPI is configured in TI mode (Bit FRF set to 1), the following procedure has to be respected to avoid generating an undesired pulse on NSS when the SPI is disabled:

1. Wait for the second to last occurrence of RXNE = 1 (n-1).
2. Disable the SPI (SPE = 0) in the following window frame using a software loop:
   - After at least one SPI clock cycle,
   - Before the beginning of the LSB data transfer.

Note: In master bidirectional receive mode (MSTR=1 and BDM=1 and BDOE=0), the BSY flag is kept low during transfers.

In slave receive-only mode (MSTR=0, BIDIMODE=0, RXONLY=1) or bidirectional receive mode (MSTR=0, BIDIMODE=1, BIDOE=0)

1. You can disable the SPI (write SPE=1) at any time: the current transfer will complete before the SPI is effectively disabled
2. Then, if you want to enter the Halt mode, you must first wait until BSY = 0 before entering the Halt mode (or disabling the peripheral clock).

28.3.9 SPI communication using DMA (direct memory addressing)

To operate at its maximum speed, the SPI needs to be fed with the data for transmission and the data received on the Rx buffer should be read to avoid overrun. To facilitate the transfers, the SPI features a DMA capability implementing a simple request/acknowledge protocol.

A DMA access is requested when the enable bit in the SPI_CR2 register is enabled. Separate requests must be issued to the Tx and Rx buffers (see *Figure 259* and *Figure 260*):

- In transmission, a DMA request is issued each time TXE is set to 1. The DMA then writes to the SPI_DR register (this clears the TXE flag).
- In reception, a DMA request is issued each time RXNE is set to 1. The DMA then reads the SPI_DR register (this clears the RXNE flag).

When the SPI is used only to transmit data, it is possible to enable only the SPI Tx DMA channel. In this case, the OVR flag is set because the data received are not read.

When the SPI is used only to receive data, it is possible to enable only the SPI Rx DMA channel.

In transmission mode, when the DMA has written all the data to be transmitted (flag TCIF is set in the DMA_ISR register), the BSY flag can be monitored to ensure that the SPI communication is complete. This is required to avoid corrupting the last transmission before disabling the SPI or entering the Stop mode. The software must first wait until TXE=1 and then until BSY=0.

Note: During discontinuous communications, there is a 2 APB clock period delay between the write operation to SPI_DR and the BSY bit setting. As a consequence, it is mandatory to wait first until TXE=1 and then until BSY=0 after writing the last data.

Figure 259. Transmission using DMA

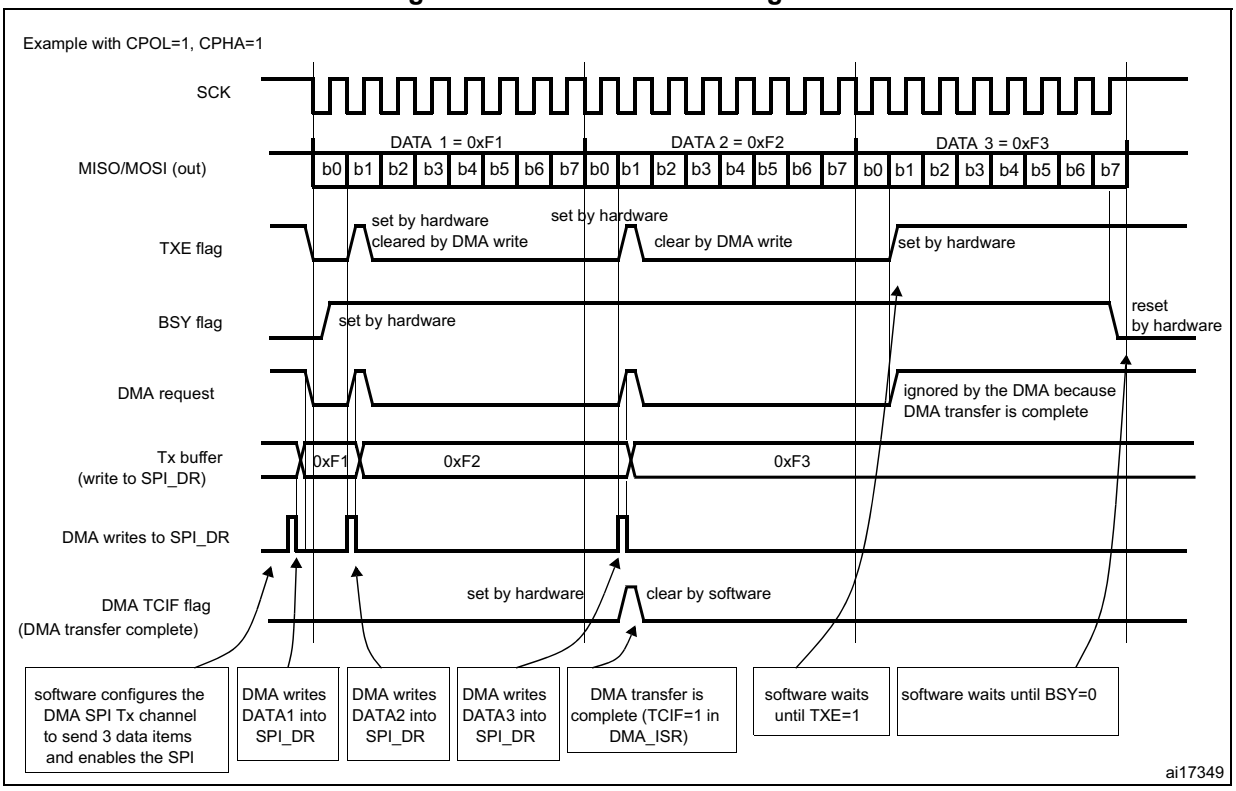

Figure 260. Reception using DMA

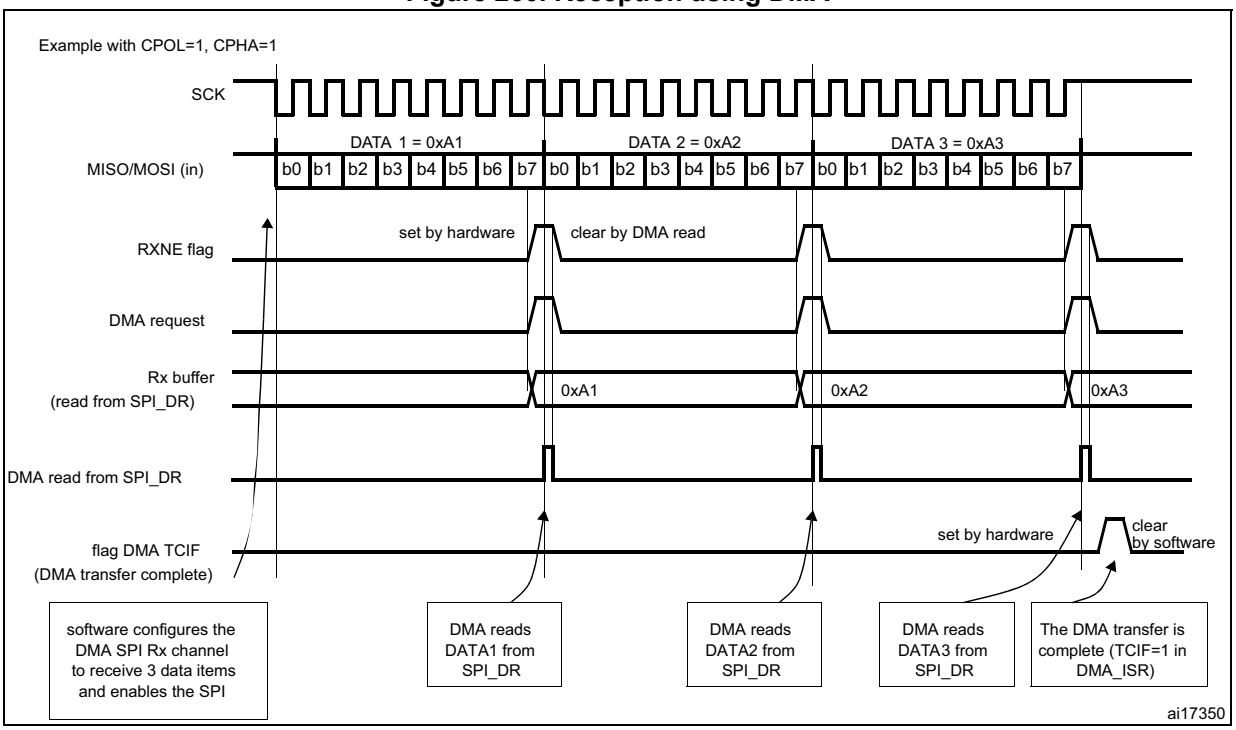

DMA capability with CRC

When SPI communication is enabled with CRC communication and DMA mode, the transmission and reception of the CRC at the end of communication are automatic that is without using the bit CRCNEXT. After the CRC reception, the CRC must be read in the SPI_DR register to clear the RXNE flag.

At the end of data and CRC transfers, the CRCERR flag in SPI_SR is set if corruption occurs during the transfer.

28.3.10 Error flags

Master mode fault (MODF)

Master mode fault occurs when the master device has its NSS pin pulled low (in NSS hardware mode) or SSI bit low (in NSS software mode), this automatically sets the MODF bit. Master mode fault affects the SPI peripheral in the following ways:

- The MODF bit is set and an SPI interrupt is generated if the ERRIE bit is set.
- The SPE bit is cleared. This blocks all output from the device and disables the SPI interface.
- The MSTR bit is cleared, thus forcing the device into slave mode.

Use the following software sequence to clear the MODF bit:

1. Make a read or write access to the SPI_SR register while the MODF bit is set.
2. Then write to the SPI_CR1 register.

To avoid any multiple slave conflicts in a system comprising several MCUs, the NSS pin must be pulled high during the MODF bit clearing sequence. The SPE and MSTR bits can be restored to their original state after this clearing sequence.

As a security, hardware does not allow the setting of the SPE and MSTR bits while the MODF bit is set.

In a slave device the MODF bit cannot be set. However, in a multimaster configuration, the device can be in slave mode with this MODF bit set. In this case, the MODF bit indicates that there might have been a multimaster conflict for system control. An interrupt routine can be used to recover cleanly from this state by performing a reset or returning to a default state.

Overrun condition

An overrun condition occurs when the master device has sent data bytes and the slave device has not cleared the RXNE bit resulting from the previous data byte transmitted. When an overrun condition occurs:

- the OVR bit is set and an interrupt is generated if the ERRIE bit is set.

In this case, the receiver buffer contents will not be updated with the newly received data from the master device. A read from the SPI_DR register returns this byte. All other subsequently transmitted bytes are lost.

Clearing the OVR bit is done by a read from the SPI_DR register followed by a read access to the SPI_SR register.

CRC error

This flag is used to verify the validity of the value received when the CRCEN bit in the SPI_CR1 register is set. The CRCERR flag in the SPI_SR register is set if the value received in the shift register does not match the receiver SPI_RXCRCR value.

TI mode frame format error

A TI mode frame format error is detected when an NSS pulse occurs during an ongoing communication when the SPI is acting in slave mode and configured to conform to the TI mode protocol. When this error occurs, the FRE flag is set in the SPI_SR register. The SPI is not disabled when an error occurs, the NSS pulse is ignored, and the SPI waits for the next NSS pulse before starting a new transfer. The data may be corrupted since the error detection may result in the lost of two data bytes.

The FRE flag is cleared when SPI_SR register is read. If the bit ERRIE is set, an interrupt is generated on the NSS error detection. In this case, the SPI should be disabled because data consistency is no more guaranteed and communications should be reinitiated by the master when the slave SPI is re-enabled.

Figure 261. TI mode frame format error detection

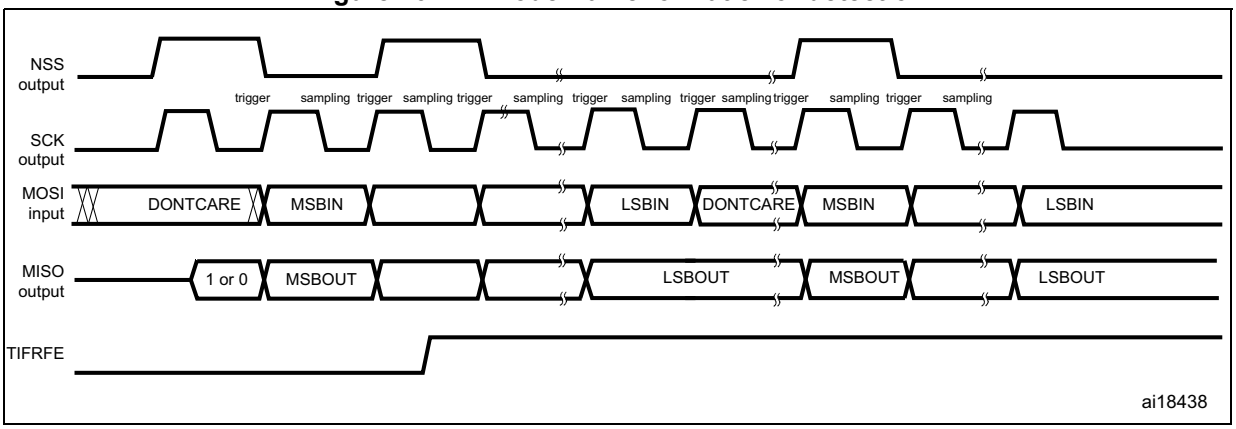

28.3.11 SPI interrupts

Table 126. SPI interrupt requests

Interrupt event	Event flag	Enable Control bit
Transmit buffer empty flag	TXE	TXEIE
Receive buffer not empty flag	RXNE	RXNEIE
Master Mode fault event	MODF	ERRIE
Overrun error	OVR	
CRC error flag	CRCERR	
TI frame format error	FRE	ERRIE

28.4 I²S functional description

28.4.1 I²S general description

The block diagram of the I²S is shown in *Figure 262*.

Figure 262. I²S block diagram

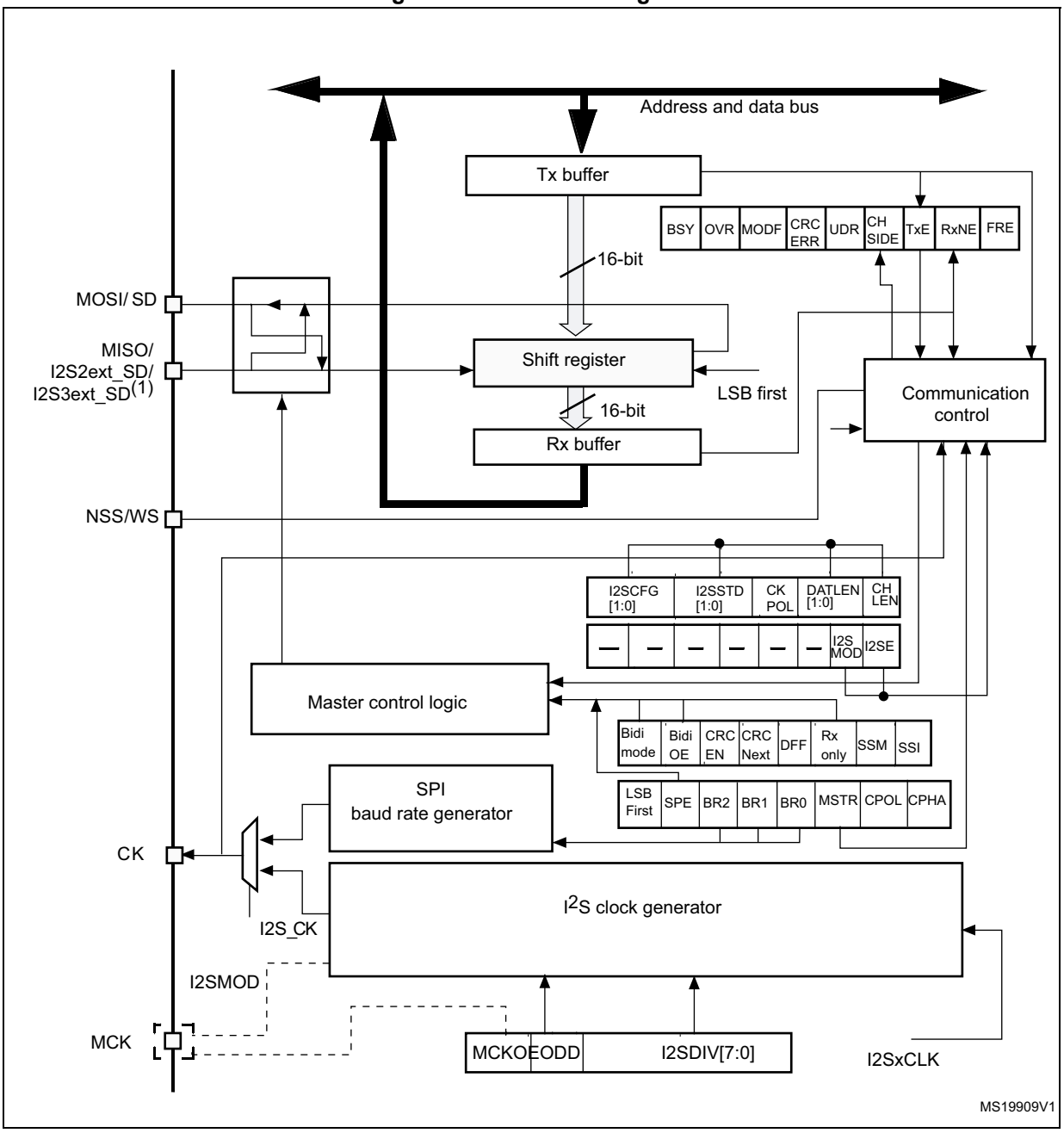

1. I2S2ext_SD and I2S3ext_SD are the extended SD pins that control the I²S full duplex mode.

The SPI could function as an audio I²S interface when the I²S capability is enabled (by setting the I2SMOD bit in the SPI_I2SCFGR register). This interface uses almost the same pins, flags and interrupts as the SPI.

The I^2S shares three common pins with the SPI:

- SD: Serial Data (mapped on the MOSI pin) to transmit or receive the two time-multiplexed data channels (in half-duplex mode only).
- WS: Word Select (mapped on the NSS pin) is the data control signal output in master mode and input in slave mode.
- CK: Serial Clock (mapped on the SCK pin) is the serial clock output in master mode and serial clock input in slave mode.
- I2S2ext_SD and I2S3ext_SD: additional pins (mapped on the MISO pin) to control the I^2S full duplex mode.

An additional pin could be used when a master clock output is needed for some external audio devices:

- MCK: Master Clock (mapped separately) is used, when the I^2S is configured in master mode (and when the MCKOE bit in the SPI_I2SPR register is set), to output this additional clock generated at a preconfigured frequency rate equal to 256 × F_S, where F_S is the audio sampling frequency.

The I^2S uses its own clock generator to produce the communication clock when it is set in master mode. This clock generator is also the source of the master clock output. Two additional registers are available in I^2S mode. One is linked to the clock generator configuration SPI_I2SPR and the other one is a generic I^2S configuration register SPI_I2SCFGR (audio standard, slave/master mode, data format, packet frame, clock polarity, etc.).

The SPI_CR1 register and all CRC registers are not used in the I^2S mode. Likewise, the SSOE bit in the SPI_CR2 register and the MODF and CRCERR bits in the SPI_SR are not used.

The I^2S uses the same SPI register for data transfer (SPI_DR) in 16-bit wide mode.

28.4.2 I2S full duplex

To support I2S full duplex mode, two extra I^2S instances called extended I2Ss (I2S2_ext, I2S3_ext) are available in addition to I2S2 and I2S3 (see *Figure 263*). The first I2S full-duplex interface is consequently based on I2S2 and I2S2_ext, and the second one on I2S3 and I2S3_ext.

Note: I2S2_ext an I2S3_ext are used only in full-duplex mode.

Figure 263. I2S full duplex block diagram

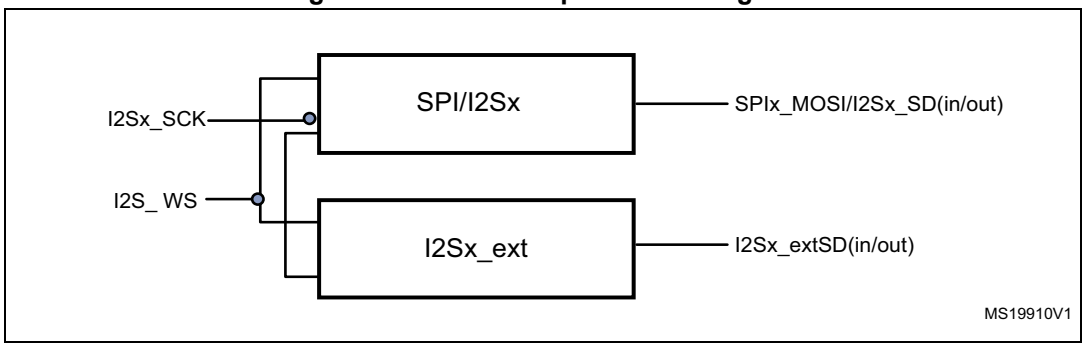

1. Where x can be 2 or 3.

I2Sx can operate in master mode. As a result:

- Only I2Sx can output SCK and WS in half duplex mode
- Only I2Sx can deliver SCK and WS to I2S2_ext and I2S3_ext in full duplex mode.

The extended I2Ss (I2Sx_ext) can be used only in full duplex mode. The I2Sx_ext operate always in slave mode.

Both I2Sx and I2Sx_ext can be configured as transmitters or receivers.

28.4.3 Supported audio protocols

The four-line bus has to handle only audio data generally time-multiplexed on two channels: the right channel and the left channel. However there is only one 16-bit register for the transmission and the reception. So, it is up to the software to write into the data register the adequate value corresponding to the considered channel side, or to read the data from the data register and to identify the corresponding channel by checking the CHSIDE bit in the SPI_SR register. Channel Left is always sent first followed by the channel right (CHSIDE has no meaning for the PCM protocol).

Four data and packet frames are available. Data may be sent with a format of:

- 16-bit data packed in 16-bit frame
- 16-bit data packed in 32-bit frame
- 24-bit data packed in 32-bit frame
- 32-bit data packed in 32-bit frame

When using 16-bit data extended on 32-bit packet, the first 16 bits (MSB) are the significant bits, the 16-bit LSB is forced to 0 without any need for software action or DMA request (only one read/write operation).

The 24-bit and 32-bit data frames need two CPU read or write operations to/from the SPI_DR or two DMA operations if the DMA is preferred for the application. For 24-bit data frame specifically, the 8 nonsignificant bits are extended to 32 bits with 0-bits (by hardware).

For all data formats and communication standards, the most significant bit is always sent first (MSB first).

The I^2S interface supports four audio standards, configurable using the I2SSTD[1:0] and PCMSYNC bits in the SPI_I2SCFGR register.

I^2S Philips standard

For this standard, the WS signal is used to indicate which channel is being transmitted. It is activated one CK clock cycle before the first bit (MSB) is available.

Figure 264. I²S Philips protocol waveforms (16/32-bit full accuracy, CPOL = 0)

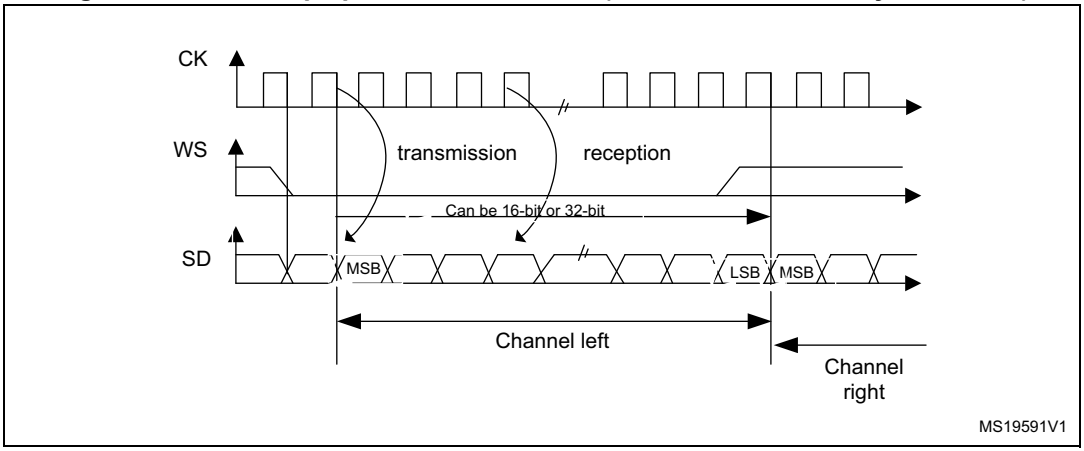

Data are latched on the falling edge of CK (for the transmitter) and are read on the rising edge (for the receiver). The WS signal is also latched on the falling edge of CK.

Figure 265. I²S Philips standard waveforms (24-bit frame with CPOL = 0)

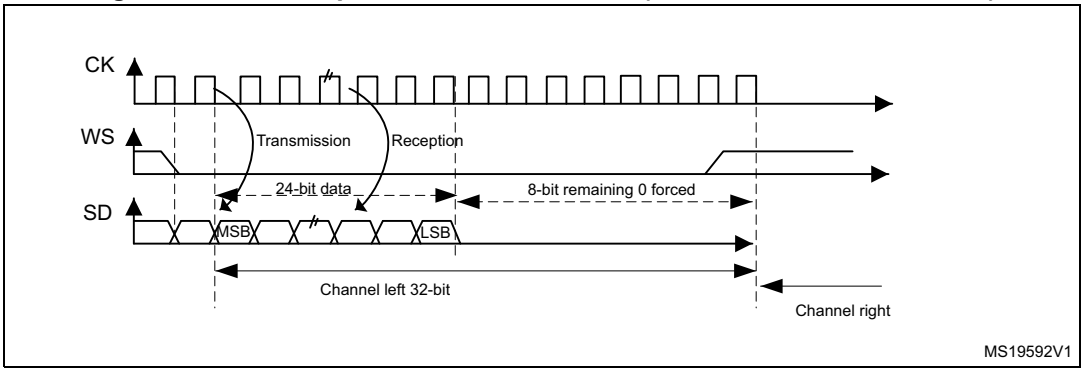

This mode needs two write or read operations to/from the SPI_DR.

- In transmission mode:
  if 0x8EAA33 has to be sent (24-bit):

Figure 266. Transmitting 0x8EAA33

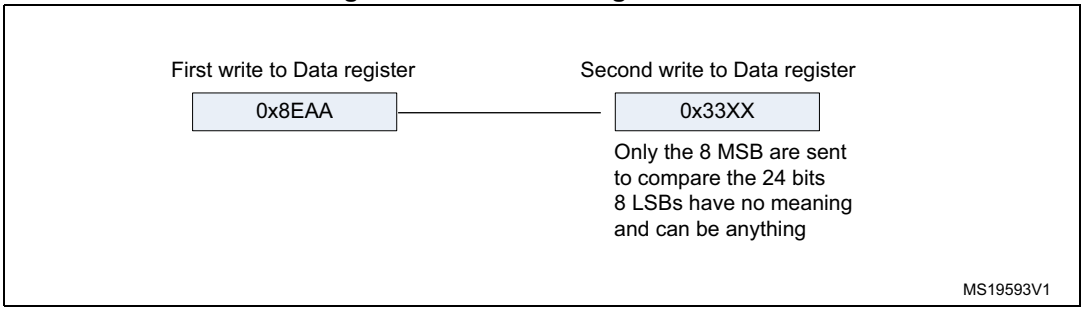

- In reception mode:
  if data 0x8EAA33 is received:

Figure 267. Receiving 0x8EAA33

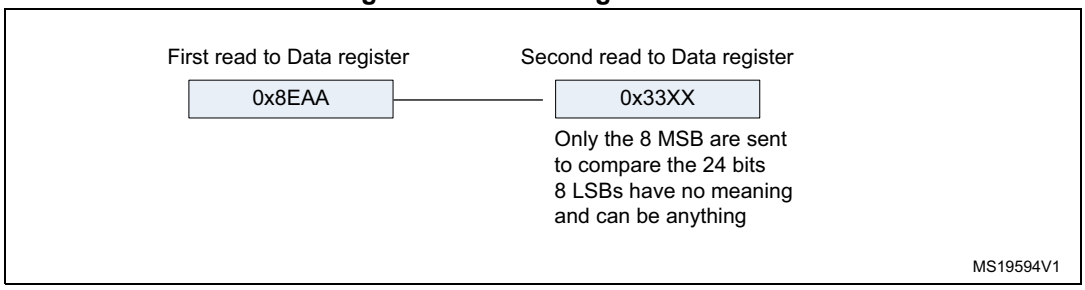

Figure 268. I²S Philips standard (16-bit extended to 32-bit packet frame with CPOL = 0)

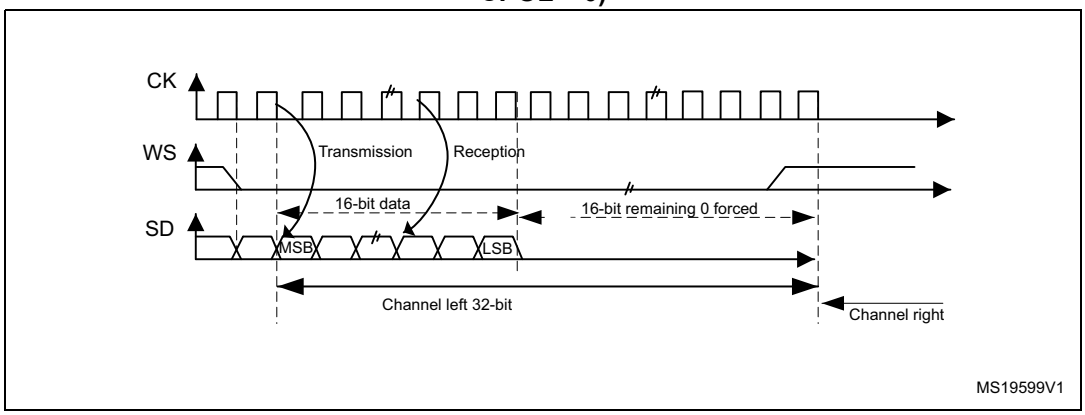

When 16-bit data frame extended to 32-bit channel frame is selected during the I²S configuration phase, only one access to SPI_DR is required. The 16 remaining bits are forced by hardware to 0x0000 to extend the data to 32-bit format.

If the data to transmit or the received data are 0x76A3 (0x76A30000 extended to 32-bit), the operation shown in *Figure 269* is required.

Figure 269. Example

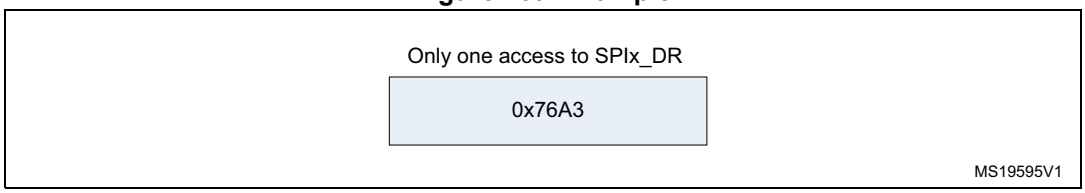

For transmission, each time an MSB is written to SPI_DR, the TXE flag is set and its interrupt, if allowed, is generated to load SPI_DR with the new value to send. This takes place even if 0x0000 have not yet been sent because it is done by hardware.

For reception, the RXNE flag is set and its interrupt, if allowed, is generated when the first 16 MSB half-word is received.

In this way, more time is provided between two write or read operations, which prevents underrun or overrun conditions (depending on the direction of the data transfer).

MSB justified standard

For this standard, the WS signal is generated at the same time as the first data bit, which is the MSBit.

Figure 270. MSB justified 16-bit or 32-bit full-accuracy length with CPOL = 0

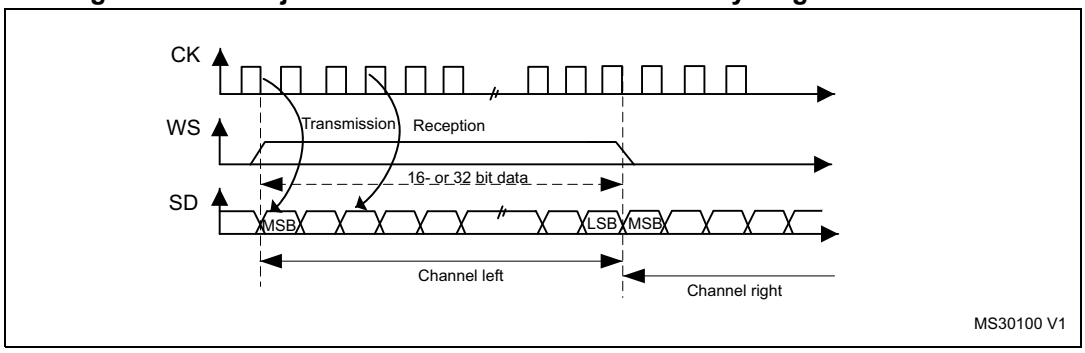

Data are latched on the falling edge of CK (for transmitter) and are read on the rising edge (for the receiver).

Figure 271. MSB justified 24-bit frame length with CPOL = 0

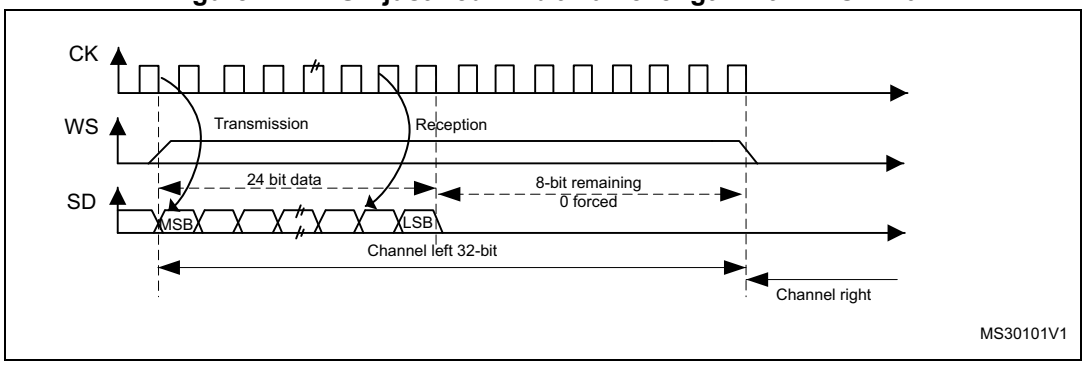

Figure 272. MSB justified 16-bit extended to 32-bit packet frame with CPOL = 0

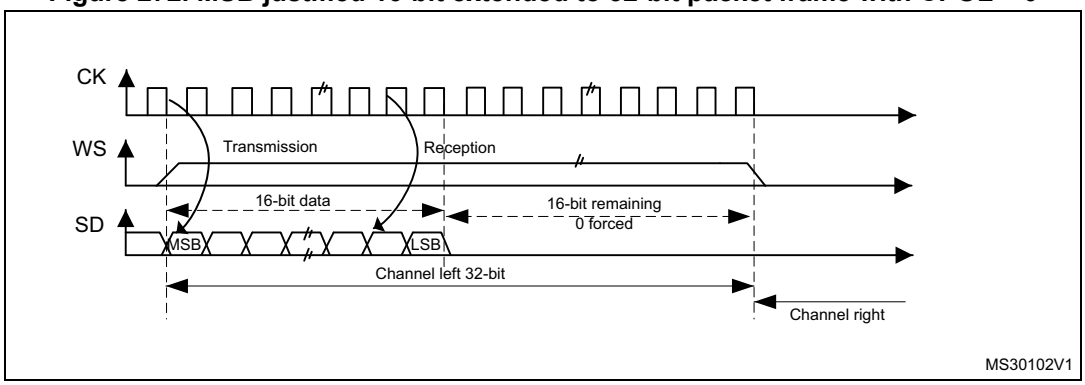

LSB justified standard

This standard is similar to the MSB justified standard (no difference for the 16-bit and 32-bit full-accuracy frame formats).

Figure 273. LSB justified 16-bit or 32-bit full-accuracy with CPOL = 0

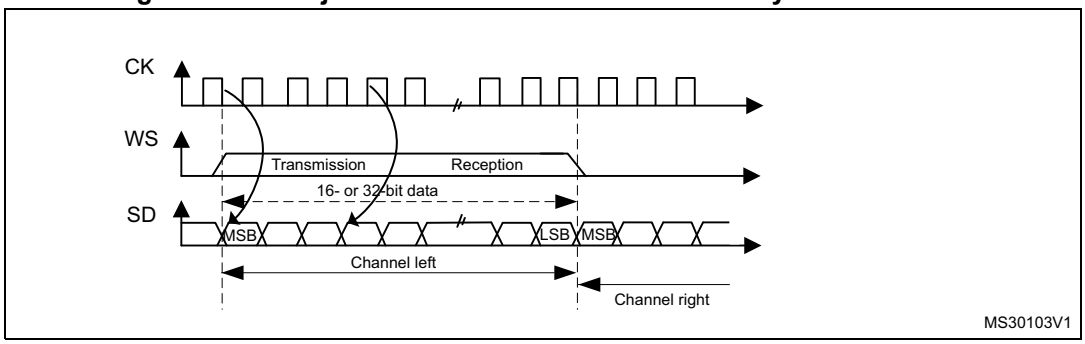

Figure 274. LSB justified 24-bit frame length with CPOL = 0

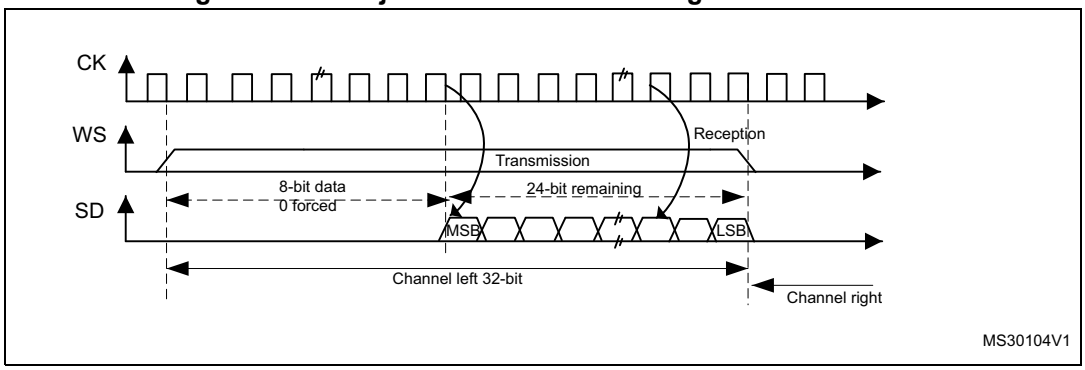

- In transmission mode:

  If data 0x3478AE have to be transmitted, two write operations to the SPI_DR register are required from software or by DMA. The operations are shown below.

Figure 275. Operations required to transmit 0x3478AE

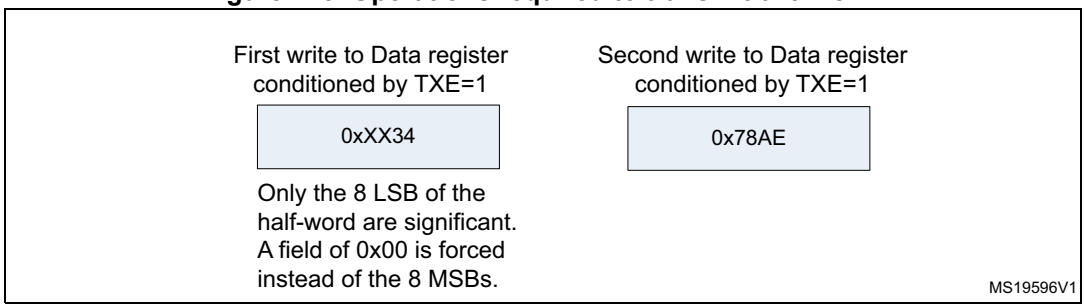

- In reception mode:

  If data 0x3478AE are received, two successive read operations from SPI_DR are required on each RXNE event.

Figure 276. Operations required to receive 0x3478AE

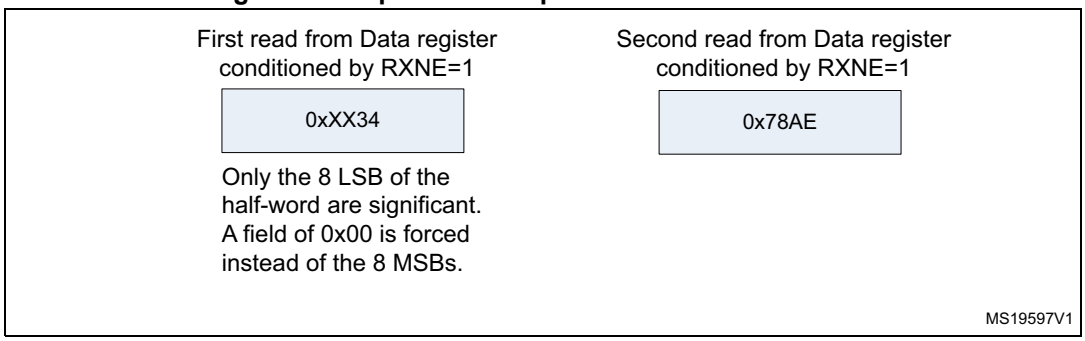

Figure 277. LSB justified 16-bit extended to 32-bit packet frame with CPOL = 0

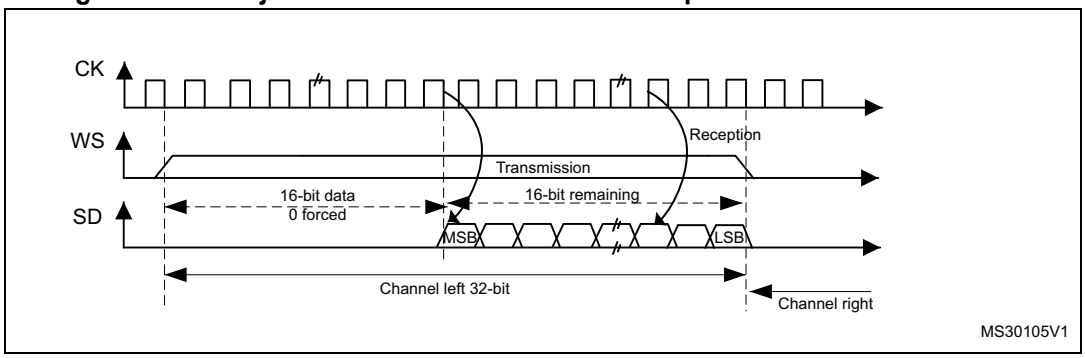

When 16-bit data frame extended to 32-bit channel frame is selected during the I^2S configuration phase, Only one access to SPI_DR is required. The 16 remaining bits are forced by hardware to 0x0000 to extend the data to 32-bit format. In this case it corresponds to the half-word MSB.

If the data to transmit or the received data are 0x76A3 (0x0000 76A3 extended to 32-bit), the operation shown in *Figure 278* is required.

Figure 278. Example of LSB justified 16-bit extended to 32-bit packet frame

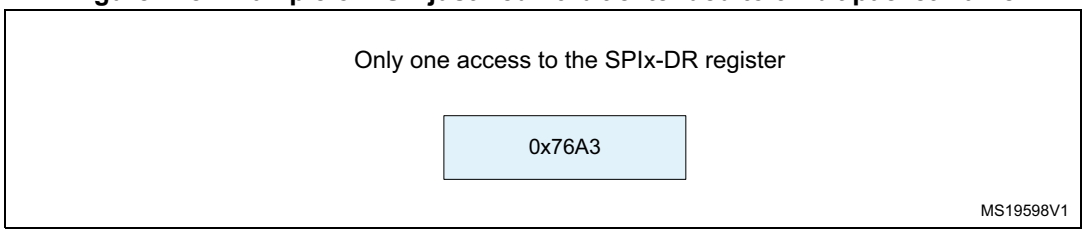

In transmission mode, when TXE is asserted, the application has to write the data to be transmitted (in this case 0x76A3). The 0x000 field is transmitted first (extension on 32-bit). TXE is asserted again as soon as the effective data (0x76A3) is sent on SD.

In reception mode, RXNE is asserted as soon as the significant half-word is received (and not the 0x0000 field).

In this way, more time is provided between two write or read operations to prevent underrun or overrun conditions.

PCM standard

For the PCM standard, there is no need to use channel-side information. The two PCM modes (short and long frame) are available and configurable using the PCMSYNC bit in SPI_I2SCFGR.

Figure 279. PCM standard waveforms (16-bit)

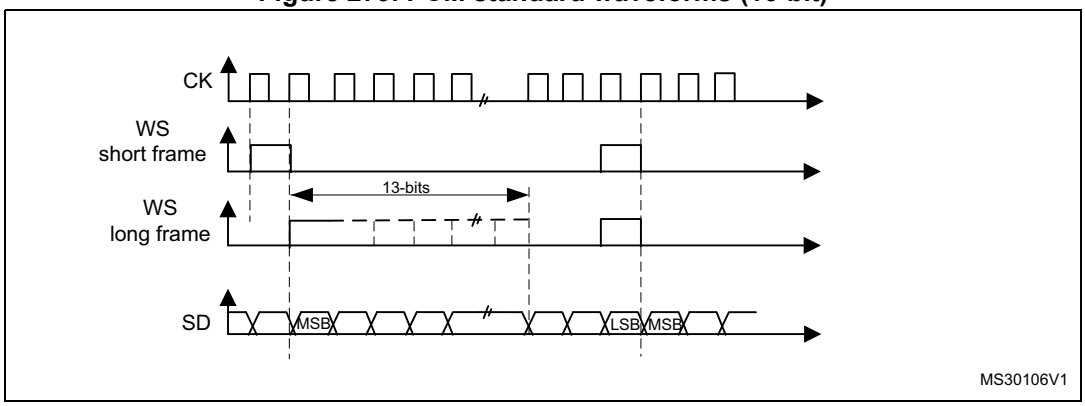

For long frame synchronization, the WS signal assertion time is fixed 13 bits in master mode.

For short frame synchronization, the WS synchronization signal is only one cycle long.

Figure 280. PCM standard waveforms (16-bit extended to 32-bit packet frame)

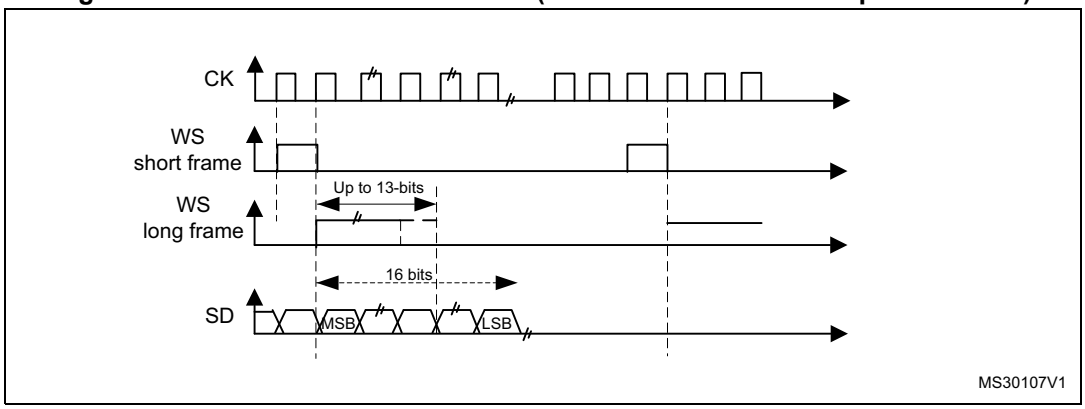

Note: For both modes (master and slave) and for both synchronizations (short and long), the number of bits between two consecutive pieces of data (and so two synchronization signals) needs to be specified (DATLEN and CHLEN bits in the SPI_I2SCFGR register) even in slave mode.

28.4.4 Clock generator

The I^2S bitrate determines the dataflow on the I^2S data line and the I^2S clock signal frequency.

I^2S bitrate = number of bits per channel × number of channels × sampling audio frequency

For a 16-bit audio, left and right channel, the I^2S bitrate is calculated as follows:

$$I^2S \text{ bitrate} = 16 \times 2 \times F_S$$

It will be: I^2S bitrate = 32 x 2 x F_S if the packet length is 32-bit wide.

Figure 281. Audio sampling frequency definition

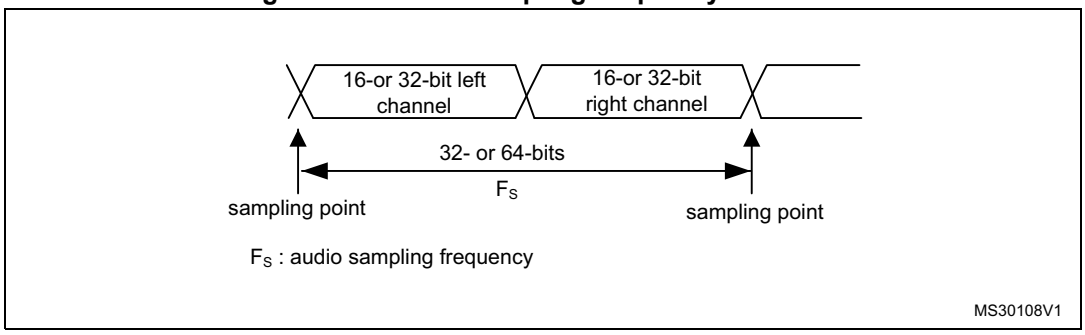

When the master mode is configured, a specific action needs to be taken to properly program the linear divider in order to communicate with the desired audio frequency.

Figure 282. I²S clock generator architecture

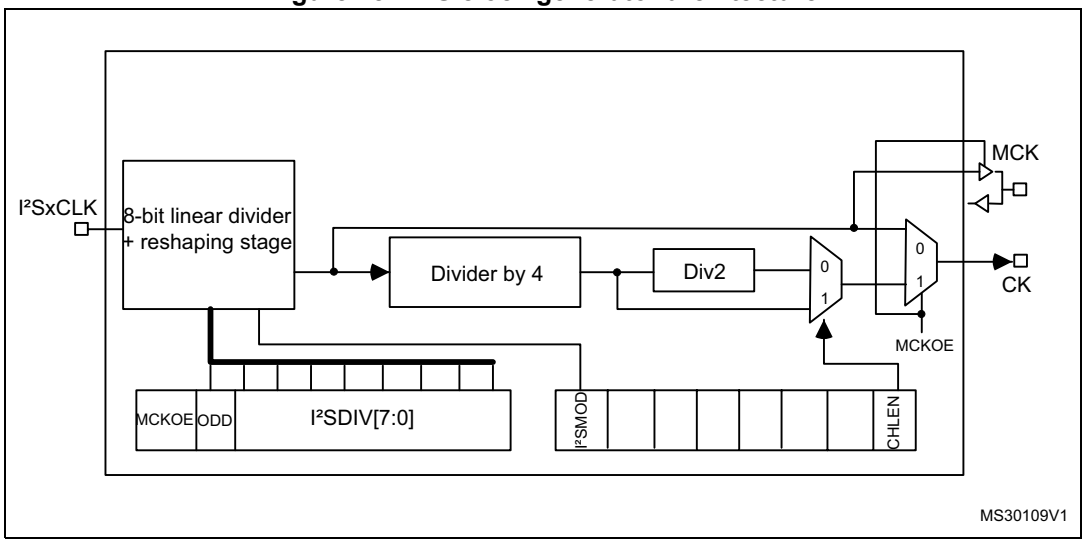

1. Where x could be 2 or 3.

Figure 281 presents the communication clock architecture. To achieve high-quality audio performance, the I2SxCLK clock source can be either the PLLI2S output (through R division factor) or an external clock (mapped to I2S_CKIN pin).

The audio sampling frequency can be 192 kHz, 96 kHz, or 48 kHz. In order to reach the desired frequency, the linear divider needs to be programmed according to the formulas below:

When the master clock is generated (MCKOE in the SPI_I2SPR register is set):

F_S = I2SxCLK / [(16*2)*((2*I2SDIV)+ODD)*8)] when the channel frame is 16-bit wide

F_S = I2SxCLK / [(32*2)*((2*I2SDIV)+ODD)*4)] when the channel frame is 32-bit wide

When the master clock is disabled (MCKOE bit cleared):

F_S = I2SxCLK / [(16*2)*((2*I2SDIV)+ODD))] when the channel frame is 16-bit wide

F_S = I2SxCLK / [(32*2)*((2*I2SDIV)+ODD))] when the channel frame is 32-bit wide

Table 127 provides example precision values for different clock configurations.

Note: Other configurations are possible that allow optimum clock precision.

Table 127. Audio frequency precision (for PLLM VCO = 1 MHz or 2 MHz)(1)

Master clock	Target f_S (Hz)	Data format	PLLI2SN	PLLI2SR	I2SDIV	I2SODD	Real f_S (Hz)	Error
Disabled	8000	16-bit	192	2	187	1	8000	0.0000%
		32-bit	192	3	62	1	8000	0.0000%
	16000	16-bit	192	3	62	1	16000	0.0000%
		32-bit	256	2	62	1	16000	0.0000%
	32000	16-bit	256	2	62	1	32000	0.0000%
		32-bit	256	5	12	1	32000	0.0000%
	48000	16-bit	192	5	12	1	48000	0.0000%
		32-bit	384	5	12	1	48000	0.0000%
	96000	16-bit	384	5	12	1	96000	0.0000%
		32-bit	424	3	11	1	96014.49219	0.0151%
	22050	16-bit	290	3	68	1	22049.87695	0.0006%
		32-bit	302	2	53	1	22050.23438	0.0011%
	44100	16-bit	302	2	53	1	44100.46875	0.0011%
		32-bit	429	4	19	0	44099.50781	0.0011%
	192000	16-bit	424	3	11	1	192028.9844	0.0151%
		32-bit	258	3	3	1	191964.2813	0.0186%
Enabled	8000	don't care	256	5	12	1	8000	0.0000%
	16000	don't care	213	2	13	0	16000.60059	0.0038%
	32000	don't care	213	2	6	1	32001.20117	0.0038%
	48000	don't care	258	3	3	1	47991.07031	0.0186%
	96000	don't care	344	2	3	1	95982.14063	0.0186%
	22050	don't care	429	4	9	1	22049.75391	0.0011%
	44100	don't care	271	2	6	0	44108.07422	0.0183%

1. This table gives only example values for different clock configurations. Other configurations allowing optimum clock precision are possible.

28.4.5 I²S master mode

The I²S can be configured as follows:

- In master mode for transmission or reception (half-duplex mode using I2Sx)
- In master mode transmission and reception (full duplex mode using I2Sx and I2Sx_ext).

This means that the serial clock is generated on the CK pin as well as the Word Select signal WS. Master clock (MCK) may be output or not, thanks to the MCKOE bit in the SPI_I2SPR register.

Procedure

1. Select the I2SDIV[7:0] bits in the SPI_I2SPR register to define the serial clock baud rate to reach the proper audio sample frequency. The ODD bit in the SPI_I2SPR register also has to be defined.
2. Select the CKPOL bit to define the steady level for the communication clock. Set the MCKOE bit in the SPI_I2SPR register if the master clock MCK needs to be provided to the external DAC/ADC audio component (the I2SDIV and ODD values should be computed depending on the state of the MCK output, for more details refer to *Section 28.4.4: Clock generator*).
3. Set the I2SMOD bit in SPI_I2SCFGR to activate the I^2S functionalities and choose the I^2S standard through the I2SSTD[1:0] and PCMSYNC bits, the data length through the DATLEN[1:0] bits and the number of bits per channel by configuring the CHLEN bit. Select also the I^2S master mode and direction (Transmitter or Receiver) through the I2SCFG[1:0] bits in the SPI_I2SCFGR register.
4. If needed, select all the potential interruption sources and the DMA capabilities by writing the SPI_CR2 register.
5. The I2SE bit in SPI_I2SCFGR register must be set.

WS and CK are configured in output mode. MCK is also an output, if the MCKOE bit in SPI_I2SPR is set.

Transmission sequence

The transmission sequence begins when a half-word is written into the Tx buffer.

Assumedly, the first data written into the Tx buffer correspond to the channel Left data. When data are transferred from the Tx buffer to the shift register, TXE is set and data corresponding to the channel Right have to be written into the Tx buffer. The CHSIDE flag indicates which channel is to be transmitted. It has a meaning when the TXE flag is set because the CHSIDE flag is updated when TXE goes high.

A full frame has to be considered as a Left channel data transmission followed by a Right channel data transmission. It is not possible to have a partial frame where only the left channel is sent.

The data half-word is parallel loaded into the 16-bit shift register during the first bit transmission, and then shifted out, serially, to the MOSI/SD pin, MSB first. The TXE flag is set after each transfer from the Tx buffer to the shift register and an interrupt is generated if the TXEIE bit in the SPI_CR2 register is set.

For more details about the write operations depending on the I^2S standard mode selected, refer to *Section 28.4.3: Supported audio protocols*).

To ensure a continuous audio data transmission, it is mandatory to write the SPI_DR with the next data to transmit before the end of the current transmission.

To switch off the I^2S, by clearing I2SE, it is mandatory to wait for TXE = 1 and BSY = 0.

Reception sequence

The operating mode is the same as for the transmission mode except for the point 3 (refer to the procedure described in *Section 28.4.5: I^2S master mode*), where the configuration should set the master reception mode through the I2SCFG[1:0] bits.

Whatever the data or channel length, the audio data are received by 16-bit packets. This means that each time the Rx buffer is full, the RXNE flag is set and an interrupt is generated

if the RXNEIE bit is set in SPI_CR2 register. Depending on the data and channel length configuration, the audio value received for a right or left channel may result from one or two receptions into the Rx buffer.

Clearing the RXNE bit is performed by reading the SPI_DR register.

CHSIDE is updated after each reception. It is sensitive to the WS signal generated by the I^2S cell.

For more details about the read operations depending on the I^2S standard mode selected, refer to *Section 28.4.3: Supported audio protocols*.

If data are received while the previously received data have not been read yet, an overrun is generated and the OVR flag is set. If the ERRIE bit is set in the SPI_CR2 register, an interrupt is generated to indicate the error.

To switch off the I^2S, specific actions are required to ensure that the I^2S completes the transfer cycle properly without initiating a new data transfer. The sequence depends on the configuration of the data and channel lengths, and on the audio protocol mode selected. In the case of:

- 16-bit data length extended on 32-bit channel length (DATLEN = 00 and CHLEN = 1) using the LSB justified mode (I2SSTD = 10)
  - a) Wait for the second to last RXNE = 1 (n – 1)
  - b) Then wait 17 I^2S clock cycles (using a software loop)
  - c) Disable the I^2S (I2SE = 0)
- 16-bit data length extended on 32-bit channel length (DATLEN = 00 and CHLEN = 1) in MSB justified, I^2S or PCM modes (I2SSTD = 00, I2SSTD = 01 or I2SSTD = 11, respectively)
  - a) Wait for the last RXNE
  - b) Then wait 1 I^2S clock cycle (using a software loop)
  - c) Disable the I^2S (I2SE = 0)
- For all other combinations of DATLEN and CHLEN, whatever the audio mode selected through the I2SSTD bits, carry out the following sequence to switch off the I^2S:
  - a) Wait for the second to last RXNE = 1 (n – 1)
  - b) Then wait one I^2S clock cycle (using a software loop)
  - c) Disable the I^2S (I2SE = 0)

Note: The BSY flag is kept low during transfers.

28.4.6 I^2S slave mode

The I^2S can be configured as follows:

- In slave mode for transmission or reception (half-duplex mode using I2Sx)
- In slave mode transmission and reception (full duplex mode using I2Sx and I2Sx_ext).

The operating mode is following mainly the same rules as described for the I^2S master configuration. In slave mode, there is no clock to be generated by the I^2S interface. The clock and WS signals are input from the external master connected to the I^2S interface. There is then no need, for the user, to configure the clock.

The configuration steps to follow are listed below:

1. Set the I2SMOD bit in the SPI_I2SCFGR register to reach the I^2S functionalities and choose the I^2S standard through the I2SSTD[1:0] bits, the data length through the DATLEN[1:0] bits and the number of bits per channel for the frame configuring the CHLEN bit. Select also the mode (transmission or reception) for the slave through the I2SCFG[1:0] bits in SPI_I2SCFGR register.
2. If needed, select all the potential interrupt sources and the DMA capabilities by writing the SPI_CR2 register.
3. The I2SE bit in SPI_I2SCFGR register must be set.

Transmission sequence

The transmission sequence begins when the external master device sends the clock and when the NSS_WS signal requests the transfer of data. The slave has to be enabled before the external master starts the communication. The I^2S data register has to be loaded before the master initiates the communication.

For the I^2S, MSB justified and LSB justified modes, the first data item to be written into the data register corresponds to the data for the left channel. When the communication starts, the data are transferred from the Tx buffer to the shift register. The TXE flag is then set in order to request the right channel data to be written into the I^2S data register.

The CHSIDE flag indicates which channel is to be transmitted. Compared to the master transmission mode, in slave mode, CHSIDE is sensitive to the WS signal coming from the external master. This means that the slave needs to be ready to transmit the first data before the clock is generated by the master. WS assertion corresponds to left channel transmitted first.

Note: The I2SE has to be written at least two PCLK cycles before the first clock of the master comes on the CK line.

The data half-word is parallel-loaded into the 16-bit shift register (from the internal bus) during the first bit transmission, and then shifted out serially to the MOSI/SD pin MSB first. The TXE flag is set after each transfer from the Tx buffer to the shift register and an interrupt is generated if the TXEIE bit in the SPI_CR2 register is set.

Note that the TXE flag should be checked to be at 1 before attempting to write the Tx buffer.

For more details about the write operations depending on the I^2S standard mode selected, refer to *Section 28.4.3: Supported audio protocols*.

To secure a continuous audio data transmission, it is mandatory to write the SPI_DR register with the next data to transmit before the end of the current transmission. An underrun flag is set and an interrupt may be generated if the data are not written into the SPI_DR register before the first clock edge of the next data communication. This indicates to the software that the transferred data are wrong. If the ERRIE bit is set into the SPI_CR2 register, an interrupt is generated when the UDR flag in the SPI_SR register goes high. In this case, it is mandatory to switch off the I^2S and to restart a data transfer starting from the left channel.

To switch off the I^2S, by clearing the I2SE bit, it is mandatory to wait for TXE = 1 and BSY = 0.

Reception sequence

The operating mode is the same as for the transmission mode except for the point 1 (refer to the procedure described in *Section 28.4.6: I^2S slave mode*), where the configuration should set the master reception mode using the I2SCFG[1:0] bits in the SPI_I2SCFGR register.

Whatever the data length or the channel length, the audio data are received by 16-bit packets. This means that each time the RX buffer is full, the RXNE flag in the SPI_SR register is set and an interrupt is generated if the RXNEIE bit is set in the SPI_CR2 register. Depending on the data length and channel length configuration, the audio value received for a right or left channel may result from one or two receptions into the RX buffer.

The CHSIDE flag is updated each time data are received to be read from SPI_DR. It is sensitive to the external WS line managed by the external master component.

Clearing the RXNE bit is performed by reading the SPI_DR register.

For more details about the read operations depending the I^2S standard mode selected, refer to *Section 28.4.3: Supported audio protocols*.

If data are received while the precedent received data have not yet been read, an overrun is generated and the OVR flag is set. If the bit ERRIE is set in the SPI_CR2 register, an interrupt is generated to indicate the error.

To switch off the I^2S in reception mode, I2SE has to be cleared immediately after receiving the last RXNE = 1.

Note: The external master components should have the capability of sending/receiving data in 16-bit or 32-bit packets via an audio channel.

28.4.7 Status flags

Three status flags are provided for the application to fully monitor the state of the I^2S bus.

Busy flag (BSY)

The BSY flag is set and cleared by hardware (writing to this flag has no effect). It indicates the state of the communication layer of the I^2S.

When BSY is set, it indicates that the I^2S is busy communicating. There is one exception in master receive mode (I2SCFG = 11) where the BSY flag is kept low during reception.

The BSY flag is useful to detect the end of a transfer if the software needs to disable the I^2S. This avoids corrupting the last transfer. For this, the procedure described below must be strictly respected.

The BSY flag is set when a transfer starts, except when the I^2S is in master receiver mode.

The BSY flag is cleared:

- when a transfer completes (except in master transmit mode, in which the communication is supposed to be continuous)
- when the I^2S is disabled

When communication is continuous:

- In master transmit mode, the BSY flag is kept high during all the transfers
- In slave mode, the BSY flag goes low for one I^2S clock cycle between each transfer

Note: Do not use the BSY flag to handle each data transmission or reception. It is better to use the TXE and RXNE flags instead.

Tx buffer empty flag (TXE)

When set, this flag indicates that the Tx buffer is empty and the next data to be transmitted can then be loaded into it. The TXE flag is reset when the Tx buffer already contains data to be transmitted. It is also reset when the I^2S is disabled (I2SE bit is reset).

RX buffer not empty (RXNE)

When set, this flag indicates that there are valid received data in the RX Buffer. It is reset when SPI_DR register is read.

Channel Side flag (CHSIDE)

In transmission mode, this flag is refreshed when TXE goes high. It indicates the channel side to which the data to transfer on SD has to belong. In case of an underrun error event in slave transmission mode, this flag is not reliable and I^2S needs to be switched off and switched on before resuming the communication.

In reception mode, this flag is refreshed when data are received into SPI_DR. It indicates from which channel side data have been received. Note that in case of error (like OVR) this flag becomes meaningless and the I^2S should be reset by disabling and then enabling it (with configuration if it needs changing).

This flag has no meaning in the PCM standard (for both Short and Long frame modes).

When the OVR or UDR flag in the SPI_SR is set and the ERRIE bit in SPI_CR2 is also set, an interrupt is generated. This interrupt can be cleared by reading the SPI_SR status register (once the interrupt source has been cleared).

28.4.8 Error flags

There are three error flags for the I^2S cell.

Underrun flag (UDR)

In slave transmission mode this flag is set when the first clock for data transmission appears while the software has not yet loaded any value into SPI_DR. It is available when the I2SMOD bit in SPI_I2SCFGR is set. An interrupt may be generated if the ERRIE bit in SPI_CR2 is set.
The UDR bit is cleared by a read operation on the SPI_SR register.

Overrun flag (OVR)

This flag is set when data are received and the previous data have not yet been read from SPI_DR. As a result, the incoming data are lost. An interrupt may be generated if the ERRIE bit is set in SPI_CR2.

In this case, the receive buffer contents are not updated with the newly received data from the transmitter device. A read operation to the SPI_DR register returns the previous correctly received data. All other subsequently transmitted half-words are lost.

Clearing the OVR bit is done by a read operation on the SPI_DR register followed by a read access to the SPI_SR register.

Frame error flag (FRE)

This flag can be set by hardware only if the I2S is configured in Slave mode. It is set if the external master is changing the WS line at a moment when the slave is not expected this

change. If the synchronization is lost, to recover from this state and resynchronize the external master device with the I2S slave device, follow the steps below:

1. Disable the I2S
2. Re-enable it when the correct level is detected on the WS line (WS line is high in I2S mode, or low for MSB- or LSB-justified or PCM modes).

Desynchronization between the master and slave device may be due to noisy environment on the SCK communication clock or on the WS frame synchronization line. An error interrupt can be generated if the ERRIE bit is set. The desynchronization flag (FRE) is cleared by software when the status register is read.

28.4.9 I^2S interrupts

Table 128 provides the list of I^2S interrupts.

Table 128. I^2S interrupt requests

Interrupt event	Event flag	Enable Control bit
Transmit buffer empty flag	TXE	TXEIE
Receive buffer not empty flag	RXNE	RXNEIE
Overrun error	OVR	ERRIE
Underrun error	UDR	
Frame error flag	FRE	ERRIE

28.4.10 DMA features

DMA is working in exactly the same way as for the SPI mode. There is no difference on the I^2S. Only the CRC feature is not available in I^2S mode since there is no data transfer protection system.

28.5 SPI and I^{2}S registers

The peripheral registers have to be accessed by half-words (16 bits) or words (32 bits).

28.5.1 SPI control register 1 (SPI_CR1) (not used in I^{2}S mode)

Address offset: 0x00

Reset value: 0x0000

15	14	13	12	11	10	9	8	7	6	5	4	3	2	1	0
BIDI MODE	BIDI OE	CRC EN	CRC NEXT	DFF	RX ONLY	SSM	SSI	*LSB FIRST*	SPE	BR [2:0]			MSTR	CPOL	CPHA
rw	rw	rw	rw	rw	rw	rw	rw	rw	rw	rw	rw	rw	rw	rw	rw

Bit 15 **BIDIMODE:** Bidirectional data mode enable

0: 2-line unidirectional data mode selected

1: 1-line bidirectional data mode selected

Note: This bit is not used in I^{2}S mode

Bit 14 **BIDIOE:** Output enable in bidirectional mode

This bit combined with the BIDImode bit selects the direction of transfer in bidirectional mode

0: Output disabled (receive-only mode)

1: Output enabled (transmit-only mode)

Note: This bit is not used in I^{2}S mode.

In master mode, the MOSI pin is used while the MISO pin is used in slave mode.

Bit 13 **CRCEN:** Hardware CRC calculation enable

0: CRC calculation disabled

1: CRC calculation enabled

Note: This bit should be written only when SPI is disabled (SPE = '0') for correct operation.

It is not used in I^{2}S mode.

Bit 12 **CRCNEXT:** CRC transfer next

0: Data phase (no CRC phase)

1: Next transfer is CRC (CRC phase)

Note: When the SPI is configured in full duplex or transmitter only modes, CRCNEXT must be written as soon as the last data is written to the SPI_DR register.

When the SPI is configured in receiver only mode, CRCNEXT must be set after the second last data reception.

This bit should be kept cleared when the transfers are managed by DMA.

It is not used in I^{2}S mode.

Bit 11 **DFF:** Data frame format

0: 8-bit data frame format is selected for transmission/reception

1: 16-bit data frame format is selected for transmission/reception

Note: This bit should be written only when SPI is disabled (SPE = '0') for correct operation.

It is not used in I^{2}S mode.

Bit 10 **RXONLY:** Receive only

This bit combined with the BIDImode bit selects the direction of transfer in 2-line unidirectional mode. This bit is also useful in a multislave system in which this particular slave is not accessed, the output from the accessed slave is not corrupted.

0: Full duplex (Transmit and receive)

1: Output disabled (Receive-only mode)

Note: This bit is not used in I^2S mode

Bit 9 **SSM:** Software slave management

When the SSM bit is set, the NSS pin input is replaced with the value from the SSI bit.

0: Software slave management disabled

1: Software slave management enabled

Note: This bit is not used in I^2S mode and SPI TI mode

Bit 8 **SSI:** Internal slave select

This bit has an effect only when the SSM bit is set. The value of this bit is forced onto the NSS pin and the IO value of the NSS pin is ignored.

Note: This bit is not used in I^2S mode and SPI TI mode

Bit 7 **LSBFIRST:** Frame format

0: MSB transmitted first

1: LSB transmitted first

Note: This bit should not be changed when communication is ongoing.
It is not used in I^2S mode and SPI TI mode

Bit 6 **SPE:** SPI enable

0: Peripheral disabled

1: Peripheral enabled

Note: This bit is not used in I^2S mode.
When disabling the SPI, follow the procedure described in Section 28.3.8.

Bits 5:3 **BR[2:0]:** Baud rate control

000: $f_{PCLK}/2$

001: $f_{PCLK}/4$

010: $f_{PCLK}/8$

011: $f_{PCLK}/16$

100: $f_{PCLK}/32$

101: $f_{PCLK}/64$

110: $f_{PCLK}/128$

111: $f_{PCLK}/256$

Note: These bits should not be changed when communication is ongoing.
They are not used in I^2S mode.

Bit 2 **MSTR:** Master selection

0: Slave configuration

1: Master configuration

Note: This bit should not be changed when communication is ongoing.
It is not used in I^2S mode.

Bit1 **CPOL:** Clock polarity
0: CK to 0 when idle
1: CK to 1 when idle
Note: This bit should not be changed when communication is ongoing. It is not used in I^2S mode and SPI TI mode.

Bit 0 **CPHA:** Clock phase
0: The first clock transition is the first data capture edge
1: The second clock transition is the first data capture edge
Note: This bit should not be changed when communication is ongoing. It is not used in I^2S mode and SPI TI mode.

28.5.2 SPI control register 2 (SPI_CR2)

Address offset: 0x04

Reset value: 0x0000

15	14	13	12	11	10	9	8	7	6	5	4	3	2	1	0
Reserved								TXEIE	RXNEIE	ERRIE	FRF	Res.	*SSOE*	TXDMAEN	RXDMAEN
								rw	rw	rw	rw		rw	rw	rw

Bits 15:8 Reserved, must be kept at reset value.

Bit 7 **TXEIE:** Tx buffer empty interrupt enable
0: TXE interrupt masked
1: TXE interrupt not masked. Used to generate an interrupt request when the TXE flag is set.

Bit 6 **RXNEIE:** RX buffer not empty interrupt enable
0: RXNE interrupt masked
1: RXNE interrupt not masked. Used to generate an interrupt request when the RXNE flag is set.

Bit 5 **ERRIE:** Error interrupt enable
This bit controls the generation of an interrupt when an error condition occurs)(CRCERR, OVR, MODF in SPI mode, FRE in TI mode and UDR, OVR, and FRE in I^2S mode).
0: Error interrupt is masked
1: Error interrupt is enabled

Bit 4 **FRF**: Frame format
0: SPI Motorola mode
1 SPI TI mode
Note: This bit is not used in I^2S mode.

Bit 3 Reserved. Forced to 0 by hardware.

Bit 2 **SSOE:** SS output enable
0: SS output is disabled in master mode and the cell can work in multimaster configuration
1: SS output is enabled in master mode and when the cell is enabled. The cell cannot work in a multimaster environment.
Note: This bit is not used in I^2S mode and SPI TI mode.

Bit 1 **TXDMAEN:** Tx buffer DMA enable
When this bit is set, the DMA request is made whenever the TXE flag is set.
0: Tx buffer DMA disabled
1: Tx buffer DMA enabled

Bit 0 **RXDMAEN:** Rx buffer DMA enable
When this bit is set, the DMA request is made whenever the RXNE flag is set.
0: Rx buffer DMA disabled
1: Rx buffer DMA enabled

28.5.3 SPI status register (SPI_SR)

Address offset: 0x08

Reset value: 0x0002

15	14	13	12	11	10	9	8	7	6	5	4	3	2	1	0
Reserved							FRE	BSY	OVR	MODF	CRC ERR	UDR	CHSIDE	TXE	RXNE
							r	r	r	r	rc_w0	r	r	r	r

Bits 15:9 Reserved. Forced to 0 by hardware.

Bit 8 FRE: Frame format error
0: No frame format error
1: A frame format error occurred
This flag is set by hardware and cleared by software when the SPIx_SR register is read.
Note: This flag is used when the SPI operates in TI slave mode or I2S slave mode (refer to Section 28.3.10).

Bit 7 ***BSY:*** Busy flag
0: SPI (or I2S) not busy
1: SPI (or I2S) is busy in communication or Tx buffer is not empty
This flag is set and cleared by hardware.
Note: BSY flag must be used with caution: refer to Section 28.3.7 and Section 28.3.8.

Bit 6 **OVR:** Overrun flag
0: No overrun occurred
1: Overrun occurred
This flag is set by hardware and reset by a software sequence. Refer to *Section 28.4.8: Error flags* for the software sequence.

Bit 5 **MODF:** Mode fault
0: No mode fault occurred
1: Mode fault occurred
This flag is set by hardware and reset by a software sequence. Refer to *Section 28.4.8: Error flags* for the software sequence.
Note: This bit is not used in I^2S mode

Bit 4 **CRCERR:** CRC error flag
0: CRC value received matches the SPI_RXCRCR value
1: CRC value received does not match the SPI_RXCRCR value
This flag is set by hardware and cleared by software writing 0.
Note: This bit is not used in I^2S mode.

Bit 3 **UDR:** Underrun flag

0: No underrun occurred

1: Underrun occurred

This flag is set by hardware and reset by a software sequence. Refer to *Section 28.4.8: Error flags* for the software sequence.

Note: This bit is not used in SPI mode.

Bit 2 **CHSIDE**: Channel side

0: Channel Left has to be transmitted or has been received

1: Channel Right has to be transmitted or has been received

Note: This bit is not used for SPI mode and is meaningless in PCM mode.

Bit 1 **TXE:** Transmit buffer empty

0: Tx buffer not empty

1: Tx buffer empty

Bit 0 **RXNE:** Receive buffer not empty

0: Rx buffer empty

1: Rx buffer not empty

28.5.4 SPI data register (SPI_DR)

Address offset: 0x0C

Reset value: 0x0000

15	14	13	12	11	10	9	8	7	6	5	4	3	2	1	0
DR[15:0]															
rw	rw	rw	rw	rw	rw	rw	rw	rw	rw	rw	rw	rw	rw	rw	rw

Bits 15:0 **DR[15:0]:** Data register

Data received or to be transmitted.

The data register is split into 2 buffers - one for writing (Transmit Buffer) and another one for reading (Receive buffer). A write to the data register will write into the Tx buffer and a read from the data register will return the value held in the Rx buffer.

Note: These notes apply to SPI mode:

Depending on the data frame format selection bit (DFF in SPI_CR1 register), the data sent or received is either 8-bit or 16-bit. This selection has to be made before enabling the SPI to ensure correct operation.

For an 8-bit data frame, the buffers are 8-bit and only the LSB of the register (SPI_DR[7:0]) is used for transmission/reception. When in reception mode, the MSB of the register (SPI_DR[15:8]) is forced to 0.

For a 16-bit data frame, the buffers are 16-bit and the entire register, SPI_DR[15:0] is used for transmission/reception.

28.5.5 SPI CRC polynomial register (SPI_CRCPR) (not used in I²S mode)

Address offset: 0x10

Reset value: 0x0007

15	14	13	12	11	10	9	8	7	6	5	4	3	2	1	0
CRCPOLY[15:0]															
rw	rw	rw	rw	rw	rw	rw	rw	rw	rw	rw	rw	rw	rw	rw	rw

Bits 15:0 **CRCPOLY[15:0]:** CRC polynomial register

This register contains the polynomial for the CRC calculation.

The CRC polynomial (0007h) is the reset value of this register. Another polynomial can be configured as required.

Note: These bits are not used for the I²S mode.

28.5.6 SPI RX CRC register (SPI_RXCRCR) (not used in I²S mode)

Address offset: 0x14

Reset value: 0x0000

15	14	13	12	11	10	9	8	7	6	5	4	3	2	1	0
RXCRC[15:0]															
r	r	r	r	r	r	r	r	r	r	r	r	r	r	r	r

Bits 15:0 **RXCRC[15:0]:** Rx CRC register

When CRC calculation is enabled, the RxCRC[15:0] bits contain the computed CRC value of the subsequently received bytes. This register is reset when the CRCEN bit in SPI_CR1 register is written to 1. The CRC is calculated serially using the polynomial programmed in the SPI_CRCPR register.

Only the 8 LSB bits are considered when the data frame format is set to be 8-bit data (DFF bit of SPI_CR1 is cleared). CRC calculation is done based on any CRC8 standard.

The entire 16-bits of this register are considered when a 16-bit data frame format is selected (DFF bit of the SPI_CR1 register is set). CRC calculation is done based on any CRC16 standard.

Note: A read to this register when the BSY Flag is set could return an incorrect value. These bits are not used for I²S mode.

28.5.7 SPI TX CRC register (SPI_TXCRCR) (not used in I^{2}S mode)

Address offset: 0x18

Reset value: 0x0000

15	14	13	12	11	10	9	8	7	6	5	4	3	2	1	0
TXCRC[15:0]															
r	r	r	r	r	r	r	r	r	r	r	r	r	r	r	r

Bits 15:0 **TXCRC[15:0]:** Tx CRC register

When CRC calculation is enabled, the TxCRC[7:0] bits contain the computed CRC value of the subsequently transmitted bytes. This register is reset when the CRCEN bit of SPI_CR1 is written to 1. The CRC is calculated serially using the polynomial programmed in the SPI_CRCPR register.

Only the 8 LSB bits are considered when the data frame format is set to be 8-bit data (DFF bit of SPI_CR1 is cleared). CRC calculation is done based on any CRC8 standard.

The entire 16-bits of this register are considered when a 16-bit data frame format is selected (DFF bit of the SPI_CR1 register is set). CRC calculation is done based on any CRC16 standard.

Note: A read to this register when the BSY flag is set could return an incorrect value. These bits are not used for I^{2}S mode.

28.5.8 SPI_I^{2}S configuration register (SPI_I2SCFGR)

Address offset: 0x1C

Reset value: 0x0000

15	14	13	12	11	10	9	8	7	6	5	4	3	2	1	0
Reserved				I2SMOD	I2SE	I2SCFG		PCMSYNC	Res.	I2SSTD		CKPOL	DATLEN		CHLEN
				rw	rw	rw	rw	rw		rw	rw	rw	rw	rw	rw

Bits 15:12 Reserved, must be kept at reset value.

Bit 11 **I2SMOD**: I2S mode selection

0: SPI mode is selected

1: I2S mode is selected

Note: This bit should be configured when the SPI or I^{2}S is disabled

Bit 10 **I2SE**: I2S Enable

0: I^{2}S peripheral is disabled

1: I^{2}S peripheral is enabled

Note: This bit is not used in SPI mode.

Bits 9:8 **I2SCFG**: I2S configuration mode

00: Slave - transmit

01: Slave - receive

10: Master - transmit

11: Master - receive

Note: This bit should be configured when the I^{2}S is disabled. It is not used in SPI mode.

Bit 7 **PCMSYNC**: PCM frame synchronization
0: Short frame synchronization
1: Long frame synchronization
Note: This bit has a meaning only if I2SSTD = 11 (PCM standard is used)
It is not used in SPI mode.

Bit 6 Reserved: forced at 0 by hardware

Bits 5:4 **I2SSTD**: I2S standard selection
00: I^2S Philips standard.
01: MSB justified standard (left justified)
10: LSB justified standard (right justified)
11: PCM standard
For more details on I^2S standards, refer to *Section 28.4.3: Supported audio protocols*. *Not used in SPI mode.*
Note: For correct operation, these bits should be configured when the I^2S is disabled.

Bit 3 **CKPOL**: Steady state clock polarity
0: I^2S clock steady state is low level
1: I^2S clock steady state is high level
Note: For correct operation, this bit should be configured when the I^2S is disabled.
This bit is not used in SPI mode

Bits 2:1 **DATLEN**: Data length to be transferred
00: 16-bit data length
01: 24-bit data length
10: 32-bit data length
11: Not allowed
Note: For correct operation, these bits should be configured when the I^2S is disabled.
This bit is not used in SPI mode.

Bit 0 **CHLEN**: Channel length (number of bits per audio channel)
0: 16-bit wide
1: 32-bit wide
The bit write operation has a meaning only if DATLEN = 00 otherwise the channel length is fixed to 32-bit by hardware whatever the value filled in. *Not used in SPI mode.*
Note: For correct operation, this bit should be configured when the I^2S is disabled.

28.5.9 SPI_I^2S prescaler register (SPI_I2SPR)

Address offset: 0x20

Reset value: 0000 0010 (0x0002)

15	14	13	12	11	10	9	8	7	6	5	4	3	2	1	0
Reserved						MCKOE	ODD	I2SDIV							
						rw	rw	rw							

Bits 15:10 Reserved, must be kept at reset value.

Bit 9 **MCKOE**: Master clock output enable

0: Master clock output is disabled

1: Master clock output is enabled

Note: This bit should be configured when the I^2S is disabled. It is used only when the I^2S is in master mode.

This bit is not used in SPI mode.

Bit 8 **ODD**: Odd factor for the prescaler

0: real divider value is = I2SDIV *2

1: real divider value is = (I2SDIV * 2)+1

Refer to *Section 28.4.4: Clock generator*. *Not used in SPI mode.*

Note: This bit should be configured when the I^2S is disabled. It is used only when the I^2S is in master mode.

Bits 7:0 **I2SDIV**: I2S Linear prescaler

I2SDIV [7:0] = 0 or I2SDIV [7:0] = 1 are forbidden values.

Refer to *Section 28.4.4: Clock generator*. *Not used in SPI mode.*

Note: These bits should be configured when the I^2S is disabled. It is used only when the I^2S is in master mode.

28.5.10 SPI register map

The table provides shows the SPI register map and reset values.

Table 129. SPI register map and reset values

Offset	Register	31	30	29	28	27	26	25	24	23	22	21	20	19	18	17	16	15	14	13	12	11	10	9	8	7	6	5	4	3	2	1	0
0x00	**SPI_CR1**	Reserved																BIDIMODE	BIDIOE	CRCEN	CRCNEXT	DFF	RXONLY	SSM	SSI	*LSBF/RST*	SPE	BR [2:0]			MSTR	CPOL	CPHA
	Reset value																	0	0	0	0	0	0	0	0	0	0	0	0	0	0	0	0
0x04	**SPI_CR2**	Reserved																								TXEIE	RXNEIE	ERRIE	FRF	Reserved	*SSOE*	TXDMAEN	RXDMAEN
	Reset value																									0	0	0	0		0	0	0
0x08	**SPI_SR**	Reserved																							FRE	BSY	OVR	MODF	CRCERR	UDR	CHSIDE	TXE	RXNE
	Reset value																								0	0	0	0	0	0	0	1	0
0x0C	**SPI_DR**	Reserved																DR[15:0]															
	Reset value																	0	0	0	0	0	0	0	0	0	0	0	0	0	0	0	0
0x10	**SPI_CRCPR**	Reserved																CRCPOLY[15:0]															
	Reset value																	0	0	0	0	0	0	0	0	0	0	0	0	0	1	1	1
0x14	**SPI_RXCRCR**	Reserved																RxCRC[15:0]															
	Reset value																	0	0	0	0	0	0	0	0	0	0	0	0	0	0	0	0
0x18	**SPI_TXCRCR**	Reserved																TxCRC[15:0]															
	Reset value																	0	0	0	0	0	0	0	0	0	0	0	0	0	0	0	0
0x1C	**SPI_I2SCFGR**	Reserved																				I2SMOD	I2SE	I2SCFG		PCMSYNC	Reserved	I2SSTD		CKPOL	DATLEN		CHLEN
	Reset value																					0	0	0	0	0		0	0	0	0	0	0
0x20	**SPI_I2SPR**	Reserved																						MCKOE	ODD	I2SDIV							
	Reset value																							0	0	0	0	0	0	0	0	1	0

Refer to *Section 2.3: Memory map* for the register boundary addresses.

29 Serial audio interface (SAI)

This section applies to the STM32F42xxx and STM32F43xxx family.

29.1 Introduction

The SAI interface (serial audio interface) offers a wide set of audio protocols due to its flexibility and wide range of configurations. Many stereo or mono audio applications may be targeted. I2S standards, LSB or MSB-justified, PCM/DSP, TDM, and AC'97 protocols may be addressed for example.

To bring this level of flexibility and configurability, the SAI contains two audio sub-blocks that are fully independent of each other. Each audio sub-block is connected to up to 4 pins (SD, SCK, FS, MCLK). Some of these pins can be shared if the two sub-blocks are declared as synchronous to leave some free to be used as general purpose I/Os. The MCLK pin can be output, or not, depending on the application, the decoder requirement and whether the audio block is configured as the master.

The SAI can work in master or slave configuration. The audio sub-blocks can be either receiver or transmitter and can work synchronously or not (with respect to the other one).

29.2 Main features

- Two independent audio sub-blocks which can be transmitters or receivers with their respective FIFO.
- 8-word integrated FIFOs for each audio sub-block.
- Synchronous or asynchronous mode between the audio sub-blocks.
- Master or slave configuration independent for both audio sub-blocks.
- Clock generator for each audio block to target independent audio frequency sampling when both audio sub-blocks are configured in master mode.
- Data size configurable: 8-, 10-, 16-, 20-, 24-, 32-bit.
- Peripheral with large configurability and flexibility allowing to target as example the following audio protocol: I2S, LSB or MSB-justified, PCM/DSP, TDM, AC'97
- Up to 16 slots available with configurable size and with the possibility to select which ones are active in the audio frame.
- Number of bits by frame may be configurable.
- Frame synchronization active level configurable (offset, bit length, level).
- First active bit position in the slot is configurable.
- LSB first or MSB first for data transfer.
- Mute mode.
- Stereo/Mono audio frame capability.
- Communication clock strobing edge configurable (SCK).
- Error flags with associated interrupts if enabled respectively.
  - Overrun and underrun detection,
  - Anticipated frame synchronization signal detection in slave mode,
  - Late frame synchronization signal detection in slave mode,
  - Codec not ready for the AC'97 mode in reception.
- Interruption sources when enabled:
  - Errors,
  - FIFO requests.
- DMA interface with 2 dedicated channels to handle access to the dedicated integrated FIFO of each SAI audio sub-block.

29.3 Functional block diagram

The block diagram of the SAI is shown in *Figure 283*.

Figure 283. Functional block diagram

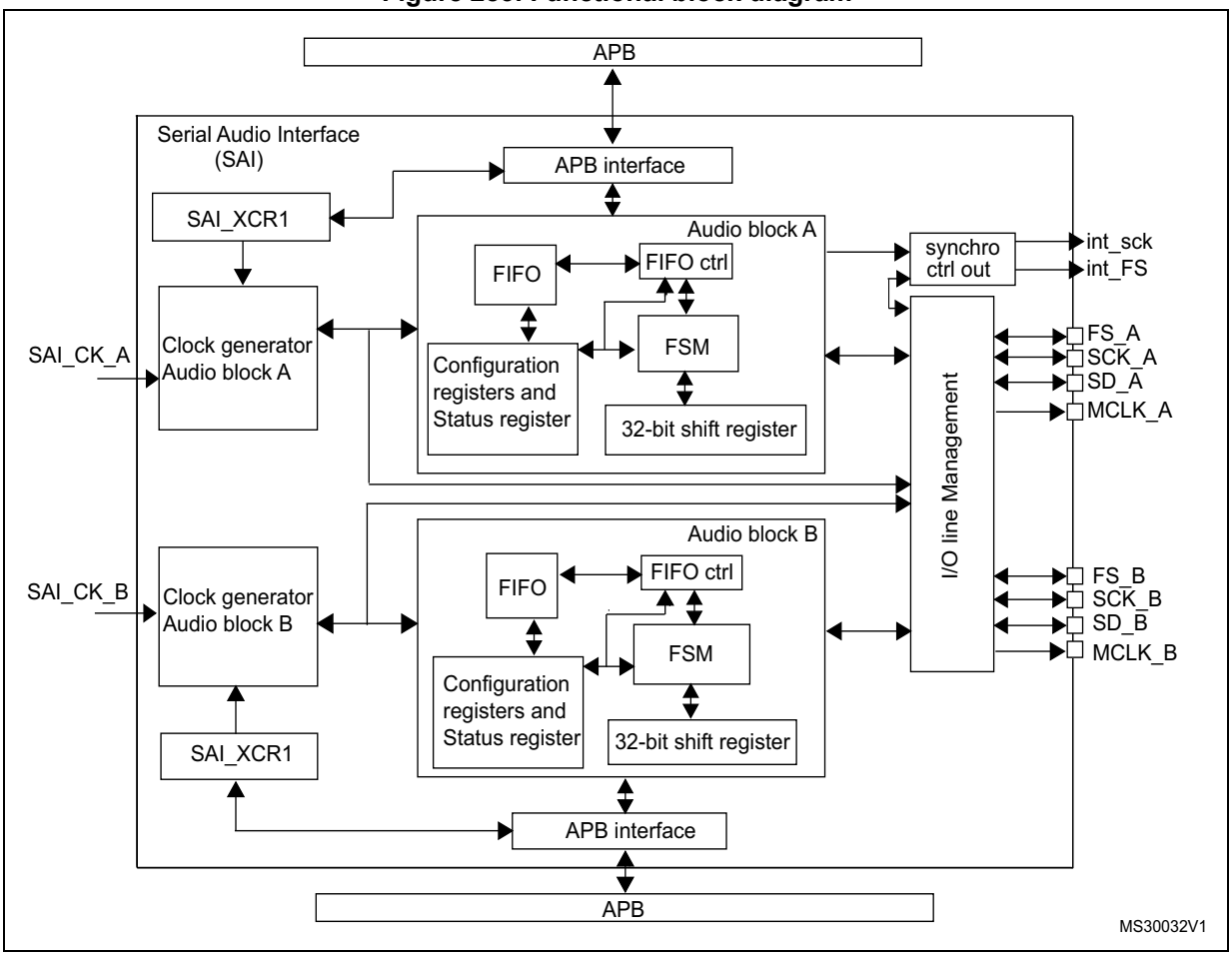

The SAI is mainly composed of two audio sub-blocks with their own clock generator. Each audio block integrates a 32-bit shift register controlled by their own functional state machine. Data are stored or read from the dedicated FIFO. FIFO may be accessed by the CPU, or by DMA in order to leave the CPU free during the communication. Each audio block is independent. They can be synchronous with each other.

An I/O line controller manages each dedicated pins for a given audio block in the SAI. If the two blocks are synchronized, this controller reduces the number of I/Os used, freeing up an FS pin, an SCK pin and eventually an MCLK pin, making them general purpose I/Os.

The functional state machine can be configured to address a wide range of audio protocols. Some registers are present to set-up the desired protocols (audio frame waveform generator).

The audio block can be a transmitter or receiver, in master or slave mode. The master mode means the bit clock SCK and the frame synchronization signal are generated from the SAI, whereas in slave mode, they come from another external or internal master. There is a particular case for which the FS signal direction is not directly linked to the master or slave

mode definition. In AC'97 protocol, it will be an SAI output even if the SAI (link controller) is set-up to consume the SCK clock (and so to be in Slave mode).

29.4 Main SAI modes

Each audio sub-block of the SAI can be configured to be master or slave via bit MODE[0] in the SAI_xCR1 register of the selected audio block.

In master mode:

- The bit clock is generated by the SAI using the clock generator on pin SCK_A or SCK_B (depending which audio block is declared as a master in the SAI).
- The dedicated pin SCK_x is considered as an output.

In slave mode:

- The slave must be enabled before the master is enabled.
- The slave audio block's SCK clock I/O pin is considered input if it is configured in asynchronous mode.
- If the audio block is declared synchronous with the second audio block in the SAI, its SCK I/O pin is released to leave it free to be used as a general purpose I/O and is connected internally to the SCK pin of the device with which it will be synchronized.

Each audio sub-block can be independently defined as a transmitter or receiver by bit MODE[1] in the SAI_xCR1 register of the relevant audio block. The I/O pin SD will be defined respectively as an output or an input.

It is possible to declare two master audio blocks in the same SAI with two different MCLK and SCK clock frequencies (they have to be declared asynchronous).

Each of the audio blocks in the SAI are enabled by bit SAIxEN in the SAI_xCR1 register. As soon as this bit is active, the transmitter or the receiver is sensitive to the activity on the clock line, data line and synchronization line in slave mode.

In master TX mode, enabling the audio block immediately generates the bit clock for the external slaves even if there is no data in the FIFO, However FS signal generation is conditioned by the presence of data in the FIFO. After the FIFO receives the first data to transmit, this data is output to external slaves. If there is no data to transmit in the FIFO, 0 values are then sent in the audio frame with an underrun flag generation.

In slave mode, the audio frame starts when the audio block is enabled and when a start of frame is detected.

In Slave TX mode, no underrun event is possible on the first frame after the audio block is enabled, because the mandatory operating sequence in this case is:

1. Write into the SAI_xDR (by software or by DMA).
2. Wait until the FIFO threshold (FLH) flag is different from 000b (FIFO empty).
3. Enable the audio block in slave transmitter mode.

29.5 SAI synchronization mode

Internal synchronization

An audio block can be declared synchronous with the second audio block. In this case, the bit clock and the frame synchronization signals are shared to reduce the number of external pins used for the communication. The audio block declared as synchronous with the other one will see its own SCK_x, FS_x, and MCLK_x pins released to bring them back as GPIOs. The one declared asynchronous is the one for which the I/O pins FS_x and SCK_x ad MCLK_x (if the audio block is considered as master) are considered.

Typically, the audio block synchronous mode may be used to configure the SAI in full duplex mode. One of the two audio blocks can be configured as master and the other as slave, or both can be slaves; with one block declared as asynchronous (respective bit SYNCEN[1:0] = 00 in SAI_xCR1) and the other one declared as synchronous with the other audio block (respective bit SYNCEN[1:0] = 01 in the SAI_xCR1).

Note: APB frequency PCLK must be greater or equal to twice the bit rate clock frequency (due to internal resynchronization stages).

29.6 Audio data size

The audio frame can target different data sizes by configuring bit DS[2:0] in the SAI_xCR1 register. The data sizes may be 8-, 10-, 16-, 20-, 24- or 32-bit. During the transfer, either the MSB or the LSB of the data are sent first, depending on the configuration of bit LSBFIRST in the SAI_xCR1 register.

29.7 Frame synchronization

The FS signal acts as the Frame synchronization signal in the audio frame (start of frame). The shape of this signal is completely configurable in order to target the different audio protocols with their own specificities concerning this Frame synchronization behavior. This configurability is done using register SAI_xFRCR. *Figure 284* gives a view of this flexibility.

Figure 284. Audio frame

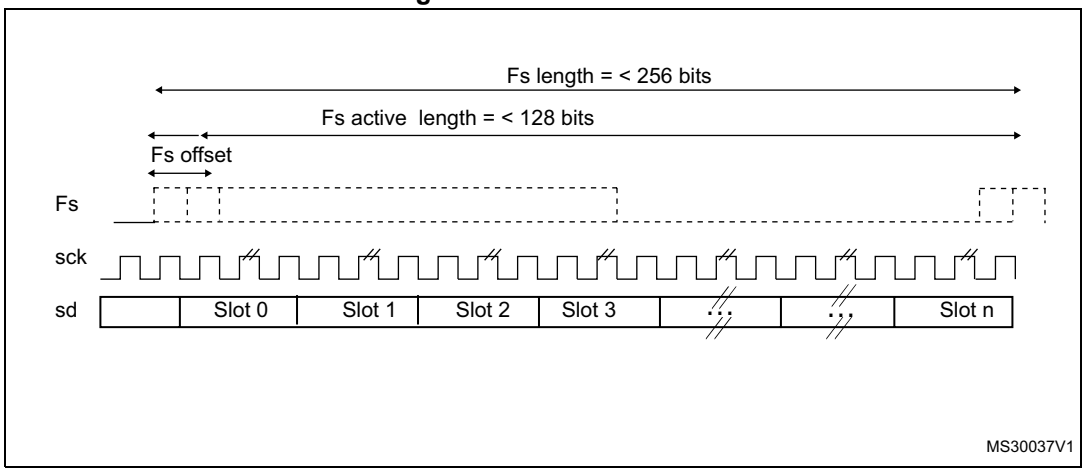

In AC'97 mode (bit PRTCFG[1:0] = 10 in the SAI_xCR1 register), the frame synchronization shape is forced to be configured to target these protocols. The SAI_xFRCR register value is ignored.

Each audio block is independent and so each requires a specific configuration.

29.7.1 Frame length

- Master mode: The audio frame length can be configured up to 256 bit clock, setting bit FRL[7:0] in the SAI_xFRCR register. If the frame length is greater than the number of declared slots for the frame, the remaining bits to transmit will be extended to 0 or the SD line will be released to HI-z depending the state of bit TRIS in the SAI_xCR2 register (refer to *Section 29.12.4*). In reception mode, the remaining bit is ignored.
- Slave mode: The audio frame length is mainly used in order to specify to the slave the number of bit clocks per audio frame sent by the external master. It is used mainly to detect from the master, any anticipated or late occurrence of the Frame synchronization signal during an on-going audio frame. An error will be generated in such case. For more details please refer to the *Section 29.13*.

The number of bits in the frame is equal to FRL[7:0] + 1.

The minimum number of bits to transfer in an audio frame is 8. This is the case when the data size is 8-bit and only one slot is defined in NBSLOT[3:0] in the SAI_xSLOTR register (NBSLOT[3:0] = 0000 for slot 0).

In master mode:

- If bit NODIV in the SAI_xCR1 register is cleared, the frame length should be aligned to a number equal to a power of 2, from 8 to 256. This is to ensure that an audio frame contains an integer number of MCLK pulses per bit clock, which ensures correct operation of the external DAC/ADC inside the decoders. If the value set in FRL[7:0] does not respect this rule, flag WCKCFG is set when the audio block is enabled and an interrupt is generated if bit WCKCFGIE is set in the SAI_xIM register. The SAI is automatically disabled.
- If bit NODIV in the SAI_xCR1 register is set, the FRL[7:0] bit can take any of the values without constraint since the input clock of the audio block should be equal to the bit clock. There is no MCLK_x clock which can be output. MCLK_x output pad is automatically disabled.

In slave mode, there are no constraints for the FRL[7:0] bit configuration in the SAI_xFRCR register.

29.7.2 Frame synchronization polarity

Bit FSPOL in the SAI_xFRCR register sets the active polarity of the FS pin from which a frame is started. The start of frame is edge sensitive.

In slave mode, the audio block waits for a valid frame to start to transmit or to receive. Start of frame is synchronized to this signal. It is effective only if the start of frame is not detected during an on-going communication and assimilated to an anticipated start of frame (refer to *Section 29.13*).

In master mode, the frame synchronization is sent continuously each time an audio frame is complete until the SAIxEN bit in the SAI_xCR1 register is cleared. If no data is present in the FIFO at the end of the previous audio frame, an underrun condition will be managed as

described in *Section 29.13*), but there will be no interruption in the audio communication flow.

29.7.3 Frame synchronization active level length

Bit FSALL[6:0] in the SAI_xFRCR register configures the length of the active level of the Frame synchronization signal. The length can be set from 1 to 128 bit clock SCK.

The active length may be half of the frame length in I2S, LSB or MSB-justified modes for instance, or one-bit wide for PCM/DSP or TDM mode, or even 16-bit length in AC'97.

29.7.4 Frame synchronization offset

Depending on the audio protocol targeted in the application, the Frame synchronization signal can be asserted when transmitting the last bit or the first bit of the audio frame (as for instance, respectively, in I2S standard protocol and in MSB-justified protocol). Bit FSOFF in the SAI_xFRCR register makes the choice.

29.7.5 FS signal role

The FS signal may have a different meaning depending on the FS function. Bit FSDEF in the SAI_xFRCR register selects which meaning it will have. It may be either:

- 0: a start of frame, like for instance the PCM/DSP, TDM, AC'97, audio protocols,
- 1: a start of frame and a channel side identification within the audio frame like for the I2S, the MSB or LSB-justified protocols.

When the FS signal is considered as a start of frame and channel side identification within the frame, the number of declared slots must be considered to be half of the number for the left channel and half of the number for the right channel. If the number of bit clock on half audio frame is greater than the number of slots dedicated to a channel side, if TRIS = 0, 0 is sent for transmission for the remaining bit clock in the SAI_xCR2 register, otherwise if TRIS = 1, the SD line is released to HI-Z. In reception, the remaining bit clock are not considered until the channel side changes.

Figure 285. FS role is start of frame + channel side identification (FSDEF = TRIS = 1)

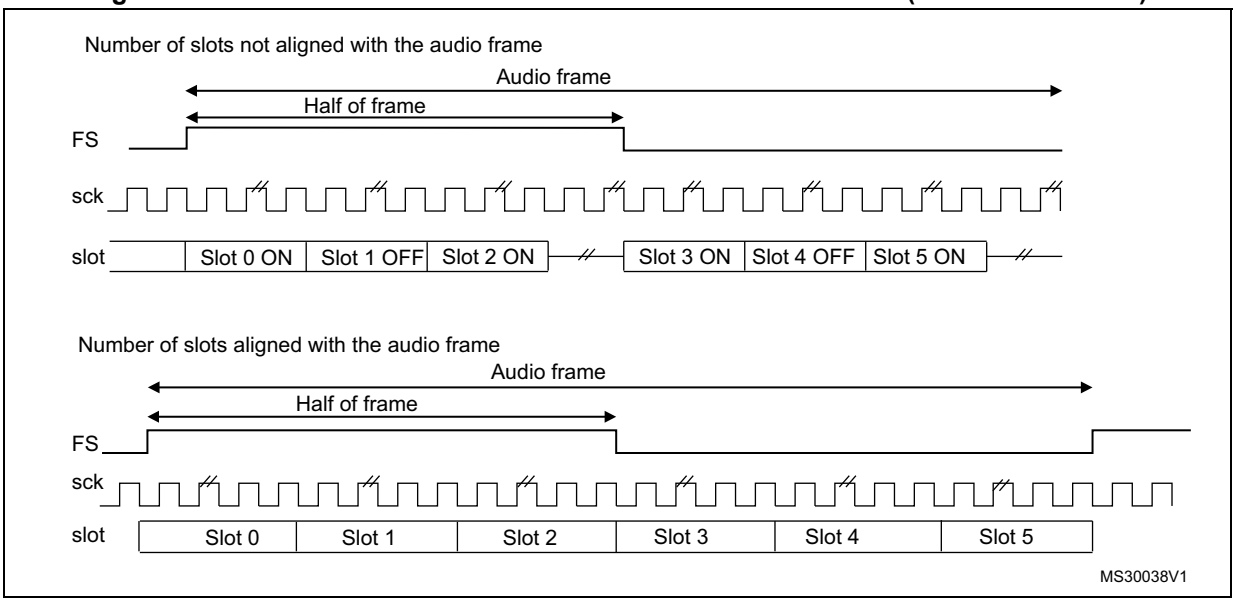

1. The frame length should be even.

If bit FSDEF in SAI_xFRCR is kept clear, so FS signal is equivalent to a start of frame, and if the number of slots defined in bit NBSLOT[3:0] in SAI_xSLOTR multiplied by the number of bits by slot configured in bit SLOTSZ[1:0] in SAI_xSLOTR is less than the frame size (bit FRL[7:0] in the SAI_xFRCR register), then,

- if TRIS = 0 in the SAI_xCR2 register, the remaining bit after the last slot will be forced to 0 until the end of frame in case of transmission,
- if TRIS = 1, the line will be released to HI-Z during the transfer of these remaining bits. In reception mode, these bits are discarded.

Figure 286. FS role is start of frame (FSDEF = 0)

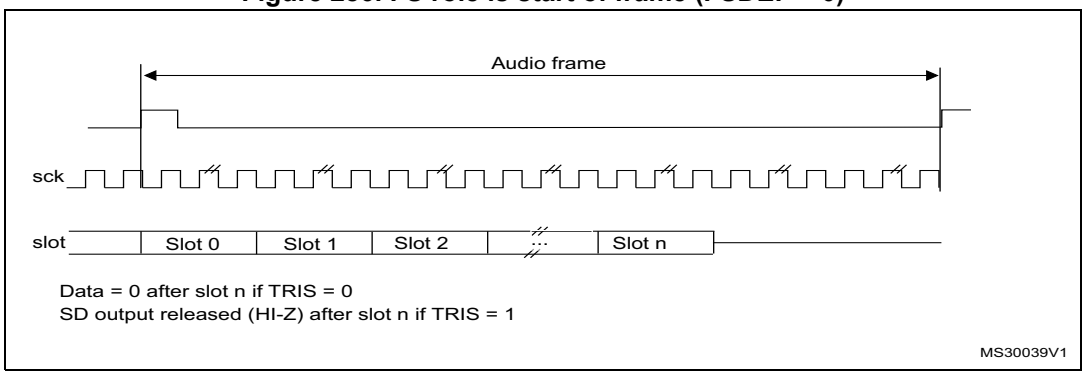

29.8 Slot configuration

The slot is the basic element in the audio frame. The number of slots in the audio frame is equal to the configured setting of bit NBSLOT[3:0] in the SAI_xSLOTR register +1. The maximum number of slots per audio frame is fixed at 16.

For AC'97 protocol (when bit PRTCFG[1:0] = 10), the number of slots is automatically set to target the protocol specification, and the value of NBSLOT[3:0] is ignored.

Each slot can be defined as a valid slot, or not, by setting bit SLOTEN[15:0] in the SAI_xSLOTR register. In an audio frame, during the transfer of a non-valid slot, 0 value will be forced on the data line or the SD data line will be released to HI-z (refer to *Section 29.12.4*) if the audio block is transmitter, or the received value from the end of this slot will be ignored. Consequently, there will be no FIFO access and so no request to read or write the FIFO linked to this inactive slot status.

The slot size is also configurable as shown in the *Figure 287.* The size of the slots is selected by setting bit SLOTSZ[1:0] in the SAI_xSLOTR register. The size is applied identically for each slot in an audio frame.

Figure 287. Slot size configuration with FBOFF = 0 in SAI_xSLOTR

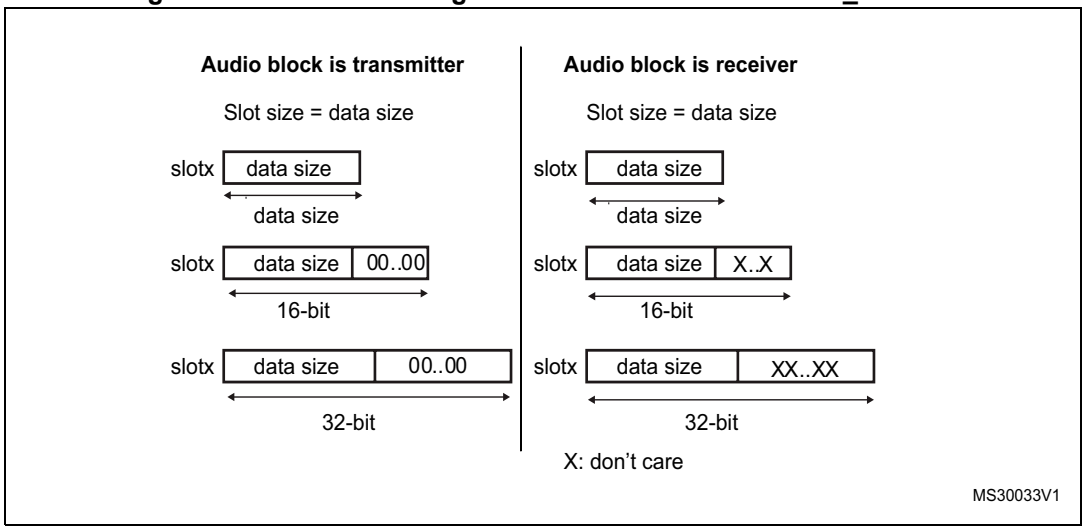

It is possible to choose the position of the first data bit to transfer within the slots, this offset is configured by bit FBOFF[5:0] in the SAI_xSLOTR register. 0 values will be injected in transmitter mode from the beginning of the slot until this offset position is reached. In reception, the bit in the offset phase is ignored. This feature targets the LSB justified protocol (if the offset is equal to the slot size minus the data size).

Figure 288. First bit offset

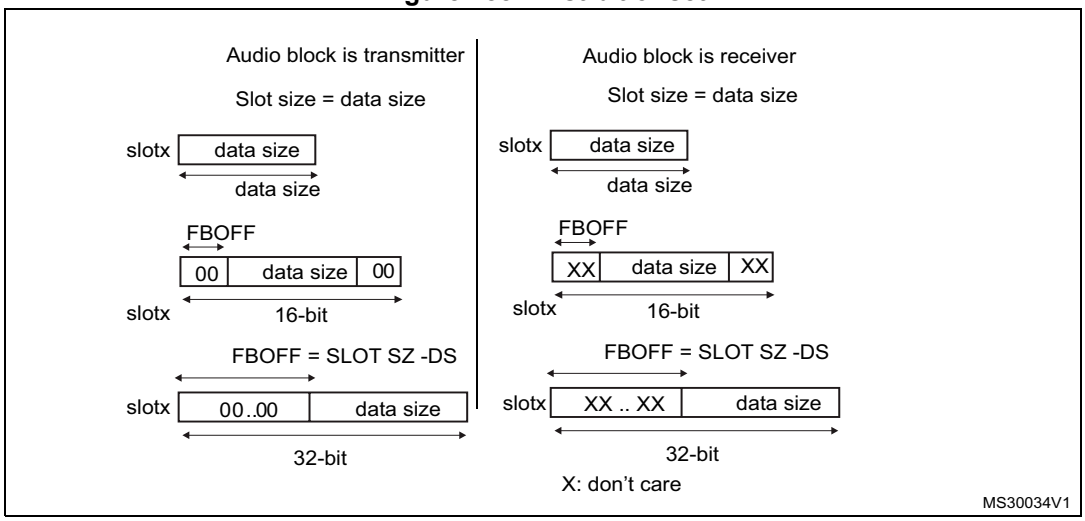

It is mandatory to respect the following conditions in order to avoid bad SAI behavior:

FBOFF ≤(SLOTSZ - DS),

DS ≤SLOTSZ,

NBSLOT x SLOTSZ ≤FRL (frame length),

The number of slots should be even when bit FSDEF in the SAI_xFRCR register is set.

In AC'97 (bit PRTCFG[1:0] = 10), the slot size is automatically set as defined in *Section 29.11*.

29.9 SAI clock generator

Each audio block has its own clock generator to make these two blocks completely independent. There is no difference in terms of functionality between these two clock generators. They are exactly the same.

When the audio block is defined as Master, the clock generator generates the communication clock (the bit clock) and the master clock for external decoders.

When the audio block is defined as slave, the clock generator is OFF.

Figure 289 illustrates the architecture of the audio block clock generator.

Figure 289. Audio block clock generator overview

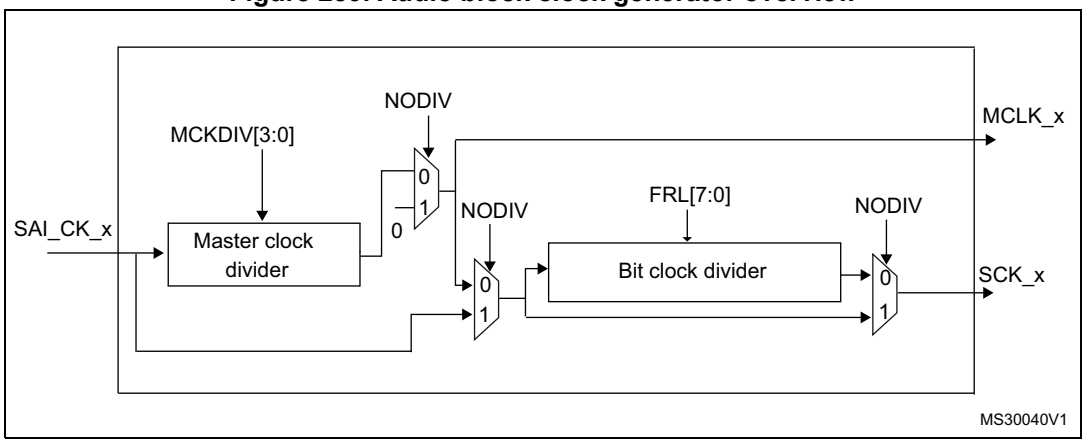

Note: If NoDiv is set to 1, the MCLK_x signal will be set at 0 level if this pin is configured as the SAI pin in GPIO peripherals.

The clock source for the clock generator comes from the product clock controller. The SAI_CK_x clock is equivalent to the master clock which may be divided for the external decoders using bit MCKDIV[3:0]:

MCLK_x = SAI_CK_x / (MCKDIV[3:0] * 2), if MCKDIV[3:0] is not equal to 0000.

MCLK_x = SAI_CK_x, if MCKDIV[3:0] is equal to 0000.

MCLK_x signal is used only in TDM.

The division must be even in order to keep 50% on the Duty cycle on the MCLK output and on the SCK_x clock. If bit MCKDIV[3:0] = 0000, division by one is applied to have MCLK_x = SAI_CK_x.

In the SAI, the single ratio MCLK/FS = 256 is considered. Mostly, three frequency ranges will be encountered as illustrated in the *Table 130*.

Table 130. Example of possible audio frequency sampling range

Input SAI_CK_x clock frequency	Most usual audio frequency sampling achievable	MCKDIV[3:0]
192 kHz x 256	192 kHz	MCKDIV[3:0] = 0000
	96 kHz	MCKDIV[3:0] = 0001
	48 kHz	MCKDIV[3:0] = 0010
	16 kHz	MCKDIV[3:0] = 0100
	8 kHz	MCKDIV[3:0] = 1000
44.1 kHz x 256	44.1 kHz	MCKDIV[3:0] = 0000
	22.05 kHz	MCKDIV[3:0] = 0001
	11.025 kHz	MCKDIV[3:0] = 0010
SAI_CK_x = MCLK(1)	MCLK	MCKDIV[3:0] = 0000

1. This may happen when the product clock controller selects an external clock source, instead of PLL clock.

The master clock may be generated externally on an I/O pad for external decoders if the corresponding audio block is declared as master with bit NODIV = 0 in the SAI_xCR1 register. In slave, the value set in this last bit is ignored since the clock generator is OFF, and the MCLK_x I/O pin is released for use as a general purpose I/O.

The bit clock is derived from the master clock. The bit clock divider sets the divider factor between the bit clock SCK_x and the master clock MCLK_x following the formula:

SCK_x = MCLK x (FRL[7:0] +1) / 256

where:

256 is the fixed ratio between MCLK and the audio frequency sampling.

FRL[7:0] is the number of bit clock - 1 in the audio frame, configured in the SAI_xFRCR register.

It is mandatory in master mode that (FRL[7:0] +1) should be equal to a number with a power of 2 (refer to *Section 29.7*) in order to have an even integer number of MCLK_x pulses by bit clock. The 50% duty cycle is guaranteed on the bit clock SCK_x.

The SAI_CK_x clock can be also equal to the bit clock frequency. In this case, bit NODIV in the SAI_xCR1 register should be set and the value inside the MCKDIV divider and the bit clock divider will be ignored. In this case, the number of bits per frame is fully configurable without the need to be equal to a power of two.

The bit clock strobing edge on SCK can be configured by bit CKSTR in the SAI_xCR1 register.

29.10 Internal FIFOs

Each audio block in the SAI has its own FIFO. Depending if the block is defined to be a transmitter or a receiver, the FIFO will be written or read, respectively. There is therefore only one FIFO request linked to FREQ bit in the SAI_xSR register.

An interrupt is generated if FREQIE bit is enabled in the SAI_xIM register. This depends on:

- FIFO threshold setting (FLTH bits in SAI_CR2)
- Communication direction transmitter or receiver (see *Section : Interrupt generation in transmitter mode* and *Section : Interrupt generation in reception mode*)

Interrupt generation in transmitter mode

The interrupt generation depends on the FIFO configuration in transmitter mode:

- When the FIFO threshold bits in SAI_XCR2 register are configured as FIFO empty (FTH[2:0] set to 000b), an interrupt is generated (FREQ bit set by hardware to 1 in SAI_XSR register) if no data are available in SAI_xDR register (FLTH[2:0] bits in SAI_xSR is less than 001b). This Interrupt (FREQ bit in SAI_XSR register) is cleared by hardware when the FIFO became not empty (FLTH[2:0] bits in SAI_xSR are different from 000b) i.e one or more data are stored in the FIFO.
- When the FIFO threshold bits in SAI_XCR2 register are configured as FIFO quarter full (FTH[2:0] set to 001b), an interrupt is generated (FREQ bit set by hardware to 1 in SAI_XSR register) if less than a quarter of the FIFO contains data (FLTH[2:0] bits in SAI_xSR are less than 010b). This Interrupt (FREQ bit in SAI_XSR register) is cleared by hardware when at least a quarter of the FIFO contains data (FLTH[2:0] bits in SAI_xSR are higher or equal to 010b).
- When the FIFO threshold bits in SAI_XCR2 register are configured as FIFO half full (FTH[2:0] set to 010b), an interrupt is generated (FREQ bit set by hardware to 1 in SAI_XSR register) if less than half of the FIFO contains data (FLTH[2:0] bits in SAI_xSR are less than 011b). This Interrupt (FREQ bit in SAI_XSR register) is cleared by hardware when at least half of the FIFO contains data (FLTH[2:0] bits in SAI_xSR are higher or equal to 011b).
- When the FIFO threshold bits in SAI_XCR2 register are configured as FIFO three quarter (FTH[2:0] set to 011b), an interrupt is generated (FREQ bit is set by hardware to 1 in SAI_XSR register) if less than three quarters of the FIFO contain data (FLTH[2:0] bits in SAI_xSR are less than 100b). This Interrupt (FREQ bit in SAI_XSR register) is cleared by hardware when at least three quarters of the FIFO contain data (FLTH[2:0] bits in SAI_xSR are higher or equal to 100b).
- When the FIFO threshold bits in SAI_XCR2 register are configured as FIFO full (FTH[2:0] set to 100b), an interrupt is generated (FREQ bit is set by hardware to 1 in SAI_XSR register) if the FIFO is not full (FLTH[2:0] bits in SAI_xSR is less than 101b). This Interrupt (FREQ bit in SAI_XSR register) is cleared by hardware when the FIFO is full (FLTH[2:0] bits in SAI_xSR is equal to 101b value).

Interrupt generation in reception mode

The interrupt generation depends on the FIFO configuration in reception mode:

- When the FIFO threshold bits in SAI_XCR2 register are configured as FIFO empty (FTH[2:0] set to 000b), an interrupt is generated (FREQ bit is set by hardware to 1 in SAI_XSR register) if at least one data is available in SAI_xDR register(FLTH[2:0] bits in SAI_xSR is higher or equal to 001b). This Interrupt (FREQ bit in SAI_XSR register) is cleared by hardware when the FIFO became empty (FLTH[2:0] bits in SAI_xSR is equal to 000b) i.e no data is stored in FIFO.
- When the FIFO threshold bits in SAI_XCR2 register are configured as FIFO quarter fully (FTH[2:0] set to 001b), an interrupt is generated (FREQ bit is set by hardware to 1 in SAI_XSR register) if at less one quarter of the FIFO data locations are available

(FLTH[2:0] bits in SAI_xSR is higher or equal to 010b). This Interrupt (FREQ bit in SAI_XSR register) is cleared by hardware when less than a quarter of the FIFO data locations become available (FLTH[2:0] bits in SAI_xSR is less than 010b).

- When the FIFO threshold bits in SAI_XCR2 register are configured as FIFO half fully (FTH[2:0] set to 010b value), an interrupt is generated (FREQ bit is set by hardware to 1 in SAI_XSR register) if at least half of the FIFO data locations are available (FLTH[2:0] bits in SAI_xSR is higher or equal to 011b). This Interrupt (FREQ bit in SAI_XSR register) is cleared by hardware when less than half of the FIFO data locations become available (FLTH[2:0] bits in SAI_xSR is less than 011b).
- When the FIFO threshold bits in SAI_XCR2 register are configured as FIFO three quarter full(FTH[2:0] set to 011b value), an interrupt is generated (FREQ bit is set by hardware to 1 in SAI_XSR register) if at least three quarters of the FIFO data locations are available (FLTH[2:0] bits in SAI_xSR is higher or equal to 100b). This Interrupt (FREQ bit in SAI_XSR register) is cleared by hardware when the FIFO has less than three quarters of the FIFO data locations avalable(FLTH[2:0] bits in SAI_xSR is less than 100b).
- When the FIFO threshold bits in SAI_XCR2 register are configured as FIFO full(FTH[2:0] set to 100b), an interrupt is generated (FREQ bit is set by hardware to 1 in SAI_XSR register) if the FIFO is full (FLTH[2:0] bits in SAI_xSR is equal to 101b). This Interrupt (FREQ bit in SAI_XSR register) is cleared by hardware when the FIFO is not full (FLTH[2:0] bits in SAI_xSR is less than 101b).

Like interrupt generation, the SAI can use the DMA if DMAEN bit in the SAI_xCR1 register is set. The FREQ bit assertion mechanism is the same as the interruption generation mechanism described above for FREQIE.

Each FIFO is an 8-word FIFO. Each read or write operation from/to the FIFO targets one word FIFO allocation whatever the access size. Each FIFO word contains one audio frame. FIFO pointers are incremented by one word after each access to the SAI_xDR register.

Data should be right aligned when it is written in the SAI_xDR.

Data received will be right aligned in the SAI_xDR.

The FIFO pointers can be reinitialized when the SAI is disabled by setting bit FFLUSH in the SAI_xCR2 register. If FFLUSH is set when the SAI is enabled the data present in the FIFO will be lost automatically.

29.11 AC’97 link controller

The SAI is able to work as an AC’97 link controller. In this protocol:

- The slot number and the slot size are fixed.
- The frame synchronization signal is perfectly defined and has a fixed shape.

To select this protocol, set bit PRTCFG[1:0] in the SAI_xCR1 register to 10. When AC’97 mode is selected the data sizes that can be used are 16-bit or 20-bit only, else SAI behavior is not guaranteed.

- Bits NBSLOT[3:0] and SLOTSZ[1:0] are consequently ignored.
- The number of slots is fixed at 13 slots. The first one is 16 bits wide and all the others are 20 bits wide (data slots).
- Bit FBOFF[5:0] in the SAI_xSLOTR register is ignored
- The SAI_xFRCR register is ignored.

The FS signal from the block defined as asynchronous is configured automatically as an output, since the AC’97 controller link drives the FS signal whatever the master or slave configuration.

Figure 290 presents an AC’97 audio frame structure.

Figure 290. AC’97 audio frame

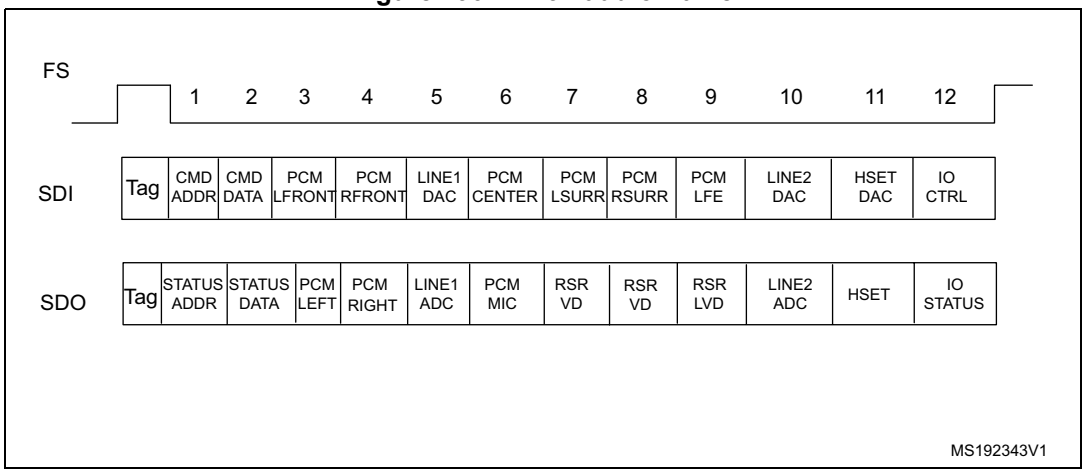

Note: In AC’97 protocol, bit 2 of the tag is reserved (always 0), so whatever the value written in the SAI FIFO, bit 2 of the TAG is forced to 0 level.

For more details about TAG representation, please refer to the AC’97 protocol standard.

One SAI can be used to target an AC’97 point-to-point communication.

In receiver mode, the SAI acting as an AC’97 link controller will require no FIFO request and so no data storage in the FIFO when the codec ready bit in the slot 0 is decoded low. If bit CNRDYIE is enabled in the SAI_xIM register, flag CNRDY will be set in the SAI_xSR register and an interrupt is generated. This flag is dedicated to the AC’97 protocol.

29.12 Specific features

The SAI has some specific functions which can be useful depending on the audio protocol selected. These functions are accessible through specific bits in the SAI_xCR2 register.

29.12.1 Mute mode

Mute mode may be used when the audio block is a transmitter or receiver.

Transmitter

In transmitter mode, Mute mode can be selected at anytime. Mute mode is active for entire audio frames. The bit MUTE in the SAI_xCR2 register requests Mute mode when it is set during an on-going frame.

The mute mode bit is strobed only at the end of the frame. If set at this time, the mute mode is active at the beginning of the new audio frame, for a complete frame, until the next end of frame, it then strobes the bit to determine if the next frame will still be a mute frame.

If the number of slots set in bit NBSLOT[3:0] in the SAI_xSLOTR register is lower than or equal to two, it is possible to specify if the value sent during the Mute mode is 0 or if it is the last value of each slot. The selection is done via bit MUTEVAL in the SAI_xCR2 register.

If the number of slots set in bit NBSLOT[3:0] in the SAI_xSLOTR register is greater than two, MUTEVAL bit in the SAI_xCR2 has no meaning as 0 values are sent on each bit on each slot.

During Mute mode, the FIFO pointers are still incremented, meaning that data which was present in the FIFO and for which the Mute mode is requested is discarded.

Receiver

In receiver mode, it is possible to detect a Mute mode sent from the external transmitter when all the declared and valid slots of the audio frame receive 0 for a given consecutive number of audio frames (bit MUTECNT[5:0] in the SAI_xCR2 register).

When the number of MUTE frames is detected, flag MUTEDET in the SAI_xSR register is set and an interrupt can be generated if bit MUTEDETIE is set in the SAI_xCR2.

The mute frame counter is cleared when the audio block is disabled or when a valid slot receives at least one data in an audio frame. The interrupt is generated just once, when the counter reaches the specified value in bit MUTECNT[5:0]. Then the interrupt event is re-armed when the counter is cleared.

29.12.2 MONO/STEREO function

In transmission mode, it is possible to address the Mono mode without any data pre-processing in memory when the number of slot is equal to 2 (NBSLOT[3:0] = 0001 in the SAI_xSLOTR). In such a case, the access to and from the FIFO will be reduced by two since in transmission, the data for slot 0 is duplicated into data slot 1.

To select the Mono feature, set bit MONO in the SAI_xCR1 register.

In reception mode, bit MONO can be set and has a meaning only if the number of slots is equal to 2 like for the transmission mode. When it is set, only the data of slot 0 will be stored in the FIFO. The data belonging to slot 1 will be discarded since in this case, it is supposed to be the same as the previous slot. If the data flux in reception is a real stereo audio flow

with a distinct and different left and right data, bit MONO has no meaning. The conversion from the output stereo file to the equivalent mono file is done by software.

Note: To enable Mono mode, NBSLOT and SLOTEN must equal two and MONO bit set to 1.

29.12.3 Companding mode

Telecommunication applications may require to process the data to transmit or to receive with a data companding algorithm.

Depending on the COMP[1:0] bit in the SAI_xCR2 register (used only when TDM mode is selected), the software may choose to process or not the data before sending it on SD serial output line (compression) or to expand the data after the reception on SD serial input line (expansion) as illustrated in Figure 291,. The two companding modes supported are the µ-Law and the A-Law log which are a part of the CCITT G.711 recommendation.

The companding standard employed in the United States and Japan is the µ-Law and allows 14 bits of dynamic range (COMP[1:0] = 10 in the SAI_xCR2 register).

The European companding standard is A-Law and allows 13 bits of dynamic range (COMP[1:0] = 11 in the SAI_xCR2 register).

Companding standard (µ-Law or A-Law) can be computed based on 1's complement or 2's complement representation depending on the CPL bit setting in the SAI_xCR2 register.

The µ-Law and A-Law formats encode data into 8-bit code elements with MSB alignment. Companded data is always 8 bits wide. For this reason, bit DS[2:0] in the SAI_xCR1 register will be forced to 010 when the SAI audio block is enabled (bit SAIxEN = 1 in the SAI_xCR1 register) and when the COMP[1:0] bit selects one of these two companding modes.

If no companding processing is required, COMP[1:0] bit in the SAI_xCR2 register should be kept cleared.

Figure 291. Data companding hardware in an audio block in the SAI

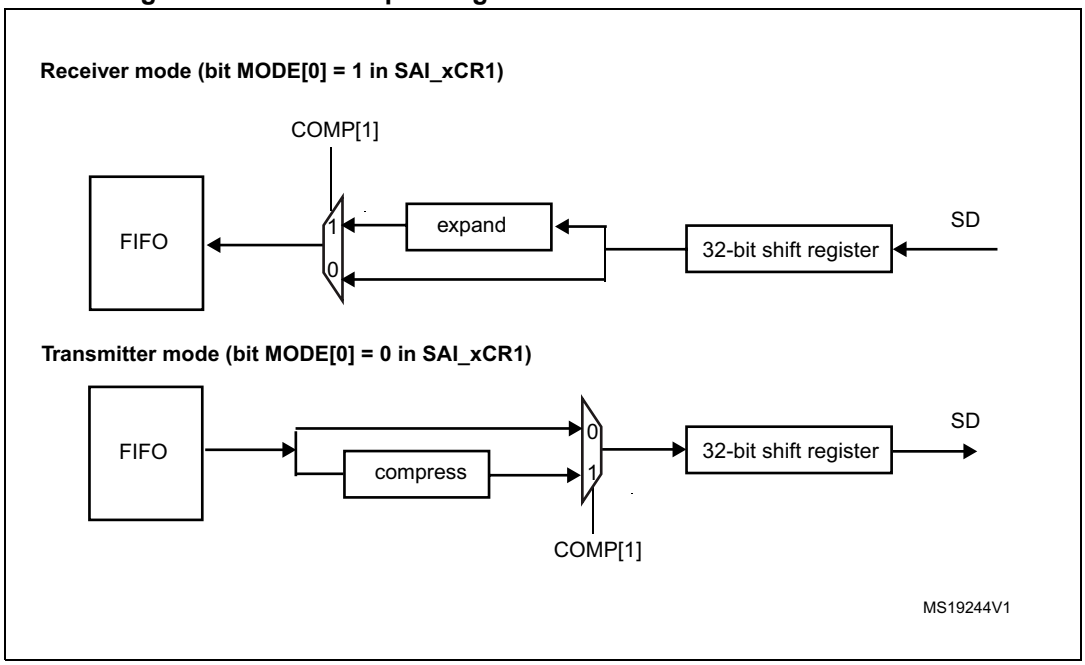

Note: Not applicable when AC'97 selected.

Expansion or compression mode is automatically selected by the SAI configuration.

- If the SAI audio block is configured to be a transmitter, and if the COMP[1] bit is set in the SAI_xCR2 register, the compression mode will be applied.
- If the SAI audio block is declared as a receiver, the expansion algorithm will be applied.

29.12.4 Output data line management on an inactive slot

In transmitter mode, it is possible to choose the behavior of the SD line in output when an inactive slot is sent on the data line (via bit TRIS in the SAI_xCR2 register when the SAI is disabled).

- Either the SAI forces 0 on the SD output line when an inactive slot is transmitted, or
- The line is released in HI-z state at the end of the last bit of data transferred, to release the line for other transmitters connected to this node.

It is important to note that the two transmitters do not attempt to drive the same SD output pin simultaneously, which could result in a short circuit. In order to ensure a gap between transmissions, if the data is lower than 32-bit, the data can be extended to 32-bit by setting bit SLOTSZ[1:0] = 10 in the SAI_xSLOTR register. Then, the SD output pin will be tristated at the end of the LSB of the active slot (during the padding to 0 phase to extend the data to 32-bit) if the following slot is declared inactive.

In addition, if the number of slots multiplied by the slot size is lower than the frame length, the SD output line will be tristated when the padding to 0 is done to complete the audio frame.

Figure 292 illustrates these behaviors.

Figure 292. Tristate strategy on SD output line on an inactive slot

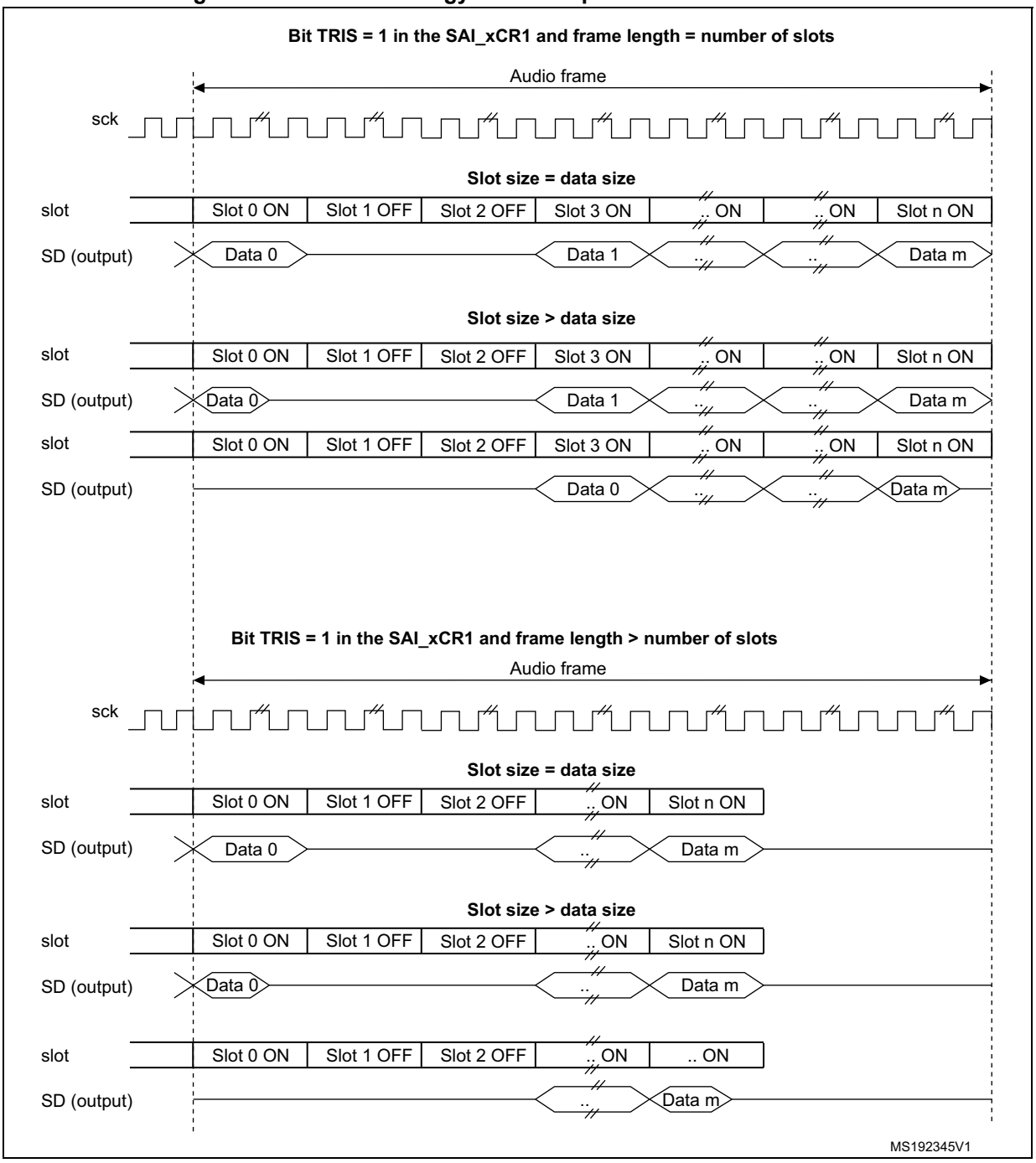

When the selected audio protocol uses the FS signal as a start of frame and a channel side identification (bit FSDEF = 1 in the SAI_xFRCR register), the tristate mode is managed according to *Figure 293* (where bit TRIS in the SAI_xCR1 register = 1, and FSDEF=1, and half frame length > number of slots/2, and NBSLOT=6).

Figure 293. Tristate on output data line in a protocol like I2S

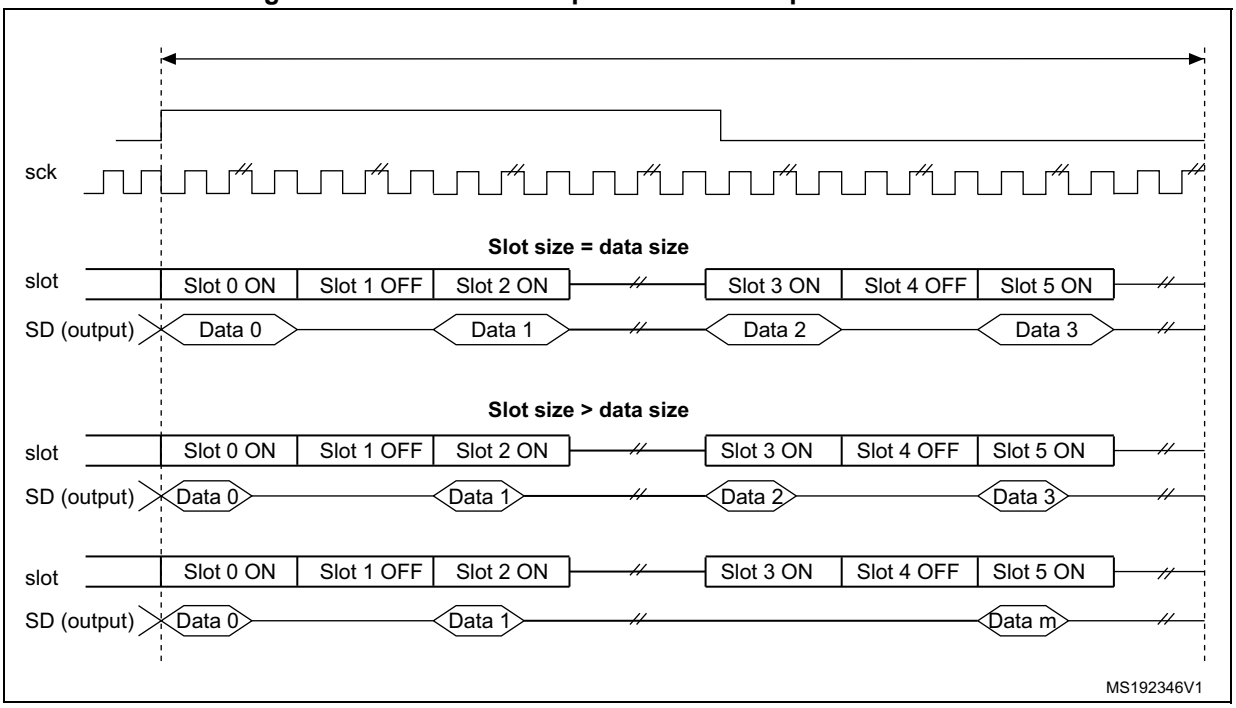

If the TRIS bit in the SAI_xCR2 register is cleared, all the High impedance states on the SD output line on *Figure 292* and *Figure 293* are replaced by a drive with a value of 0.

29.13 Error flags

The SAI embeds some error flags:

- FIFO overrun/underrun,
- Anticipated frame synchronization detection,
- Late frame synchronization detection,
- Codec not ready (AC'97 exclusively),
- Wrong clock configuration in master mode.

29.13.1 FIFO overrun/underrun (OVRUDR)

The FIFO Overrun/Underrun bit is called OVRUDR in the SAI_xSR register.

The overrun or underrun errors occupy the same bit since an audio block can be either receiver or transmitter and each audio block in an SAI has its own SAI_xSR register.

Overrun

When the audio block is configured as receiver, an overrun condition may appear if data is received in an audio frame when the FIFO is full and is not able to store the received data. In this case, the received data is lost, the flag OVRUDR in the SAI_xSR register is set and an interrupt is generated if bit OVRUDRIE is set in the SAI_xIM register. The slot number from which the overrun occurs, is stored internally. No more data will be stored into the FIFO until it becomes free to store new data. When the FIFO has at least one data free, the SAI audio block receiver will store new data (from new audio frame) from the slot number which

was stored internally when the overrun condition was detected, and this, to avoid data slot de-alignment in the destination memory (refer to *Figure 294*).

The OVRUDR flag is cleared when bit COVRUDR is set in the SAI_xCLRFR register.

Figure 294. Overrun detection error

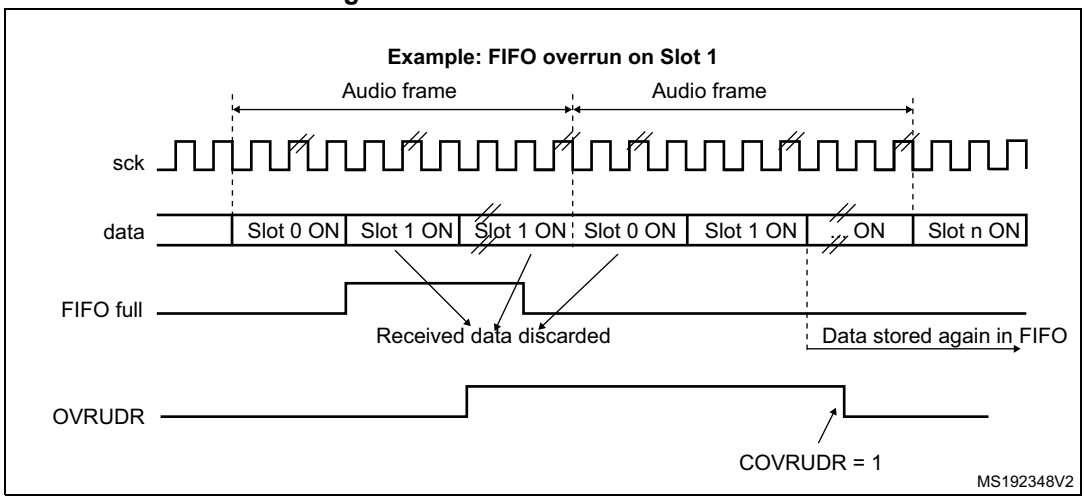

Underrun

An underrun may occur when the audio block in the SAI is a transmitter and the FIFO is empty when data needs to be transmitted (the audio block configuration (Master or Slave) is not relevant). If an underrun is detected, the software must resynchronize data and slot. Proceed as follows:

1. Disable the SAI peripheral by resetting the SAIEN bit of the SAI_xCR1 register. Check that the SAI has been disabled by reading back the SAIEN bit (SAIEN should be equal to 0).
2. Flush the Tx FIFO through the FFLUS bit of the SAI_xCR2 register.
3. Re-assigned to the correct data to be transferred on the first active slot of the new frame.
4. Re-enabling the SAI peripheral (SAIEN bit set to 1).

The underrun event sets the OVRUDR flag in the SAI_xSR register and an interrupt is generated if the OVRUDRIE bit is set in the SAI_xIM register. To clear this flag, set the COVRUDR bit in the SAI_xCLRFR register.

Figure 295. FIFO underrun event

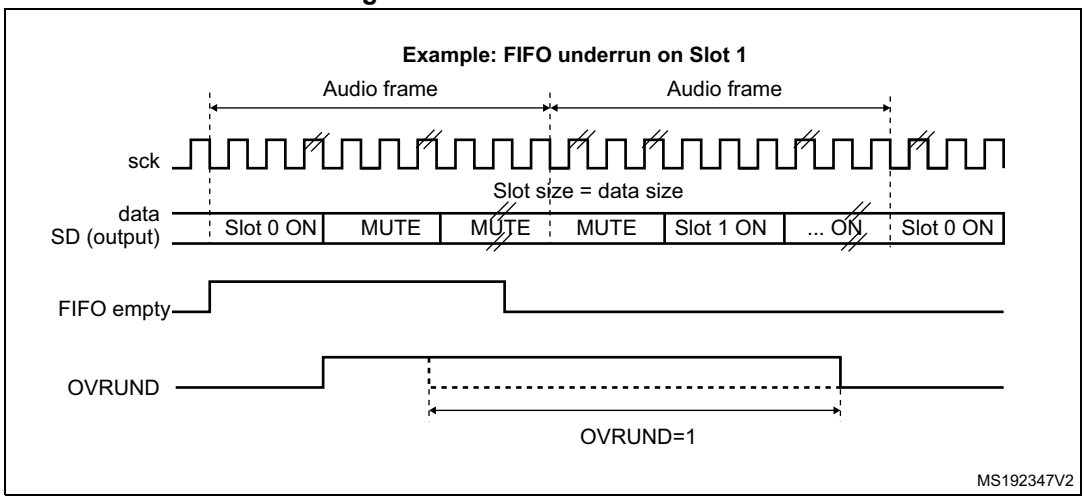

29.13.2 Anticipated frame synchronisation detection (AFSDET)

This flag AFSDET is used only in Slave mode. In master mode, it is never asserted. It informs about the detection of a frame synchronisation (FS) earlier than expected since the frame length, the frame polarity, the frame offset are defined and known.

Early detection sets flag AFSDET in the SAI_xSR register.

This detection has no effect on the current audio frame which is not sensitive to the anticipated FS. This means that “parasitic” events on signal FS are flagged without any perturbation of the current audio frame.

If bit AFSDETIE is set in the SAI_xIM register, an interrupt is generated. To clear the flag AFSDET, bit CAFSDET in the SAI_xCLRFR register has to be set.

To resynchronize with the master after Anticipated frame detection error, four steps should be respected:

1. SAI block should be disabled by resetting SAIEN bit in SAI_xCR1 register, to be sure that the SAI is disabled SAIEN bit is should be equal to 0 (reading back this bit).
2. FIFO should be flushed via FFLUS bit in SAI_xCR2 register.
3. Re-enabling the SAI peripheral (SAIEN bit set to 1) then the SAI.
4. SAI block will wait for the assertion on FS to restart the synchronization with master.

Note: This flag is not asserted in AC’97 since the SAI audio block acts as a link controller and generates the FS signal even when declared as slave.

29.13.3 Late frame synchronization detection

Flag LFSDET in the SAI_xSR register can be set only when the SAI audio block is defined as slave. The frame length, the frame polarity and the frame offset configuration are known in register SAI_xFRCR.

If the external master does not send the FS signal at the expecting time (generating the signal too late), the flag LFSDET in the SAI_xSR register will be set and an interrupt is generated if bit LFSDETIE in the SAI_xIM register is set.

The flag is cleared when bit CLFSDET is set in the SAI_xCLRFR register.

The late frame synchronisation detection flag is set when the error is detected, SAI needs to be resynchronized with the master (the four steps described above should be respected).

This detection and flag assertion can detect glitches on the SCK clock in a noisy environment, detected by the state machine of the audio block. It could incorrectly shift the SAI audio block state machine from one state in the current audio frame, thus corrupting the frame.

There is no corruption if the external master is not managing the audio data frame transfer in a continuous mode, which should not be the case for most application purposes. In this case, flag LFSDET will be set.

Note: This flag is not asserted in AC'97 mode since the SAI audio block acts as a link controller and generates the FS signal even when declared as slave.

29.13.4 Codec not ready (CNRDY AC'97)

The flag CNRDY in the SAI_xSR register is relevant only if the SAI audio block is configured to work in AC'97 mode (bit PRTCFG[1:0] = 10 in the SAI_xCR1 register). If bit CNRDYIE is set in the SAI_xIM register, an interrupt will be generated when the flag CNRDY is set.

It is asserted when the codec is not ready to communicate during the reception of the TAG 0 (slot0) of the AC'97 audio frame. In this case, there will be no data automatically stored into the FIFO since the codec is not ready, until the TAG 0 indicates that the codec is ready. All the active slots defined in the SAI_xSLOTR register will be captured when the codec is ready.

To clear the flag, bit CCNRDY in the SAI_xCLRFR register has to be set.

29.13.5 Wrong clock configuration in master mode (with NODIV = 0)

When the audio block is master (MODE[1] = 0 in the SAI_xCR1 register) and if bit NODIV in the SAI_xCR1 is clear, the flag WCKCFG will be set if bit FRL[7:0] in the SAI_xFRCR is not set with a proper value when the SAIxEN bit in the SAI_xCR1 register is set, in order to respect this following rule:

$$(\mathrm{FRL}[7,0]) + 1 = 2^n$$

where n is in the range from 3 to 8.

If bit WCKCFGIE is set, an interrupt is generated when flag WCKCFG is set in the SAI_xSR register. To clear the flag, set bit CWCKCFG bit in the SAI_xCLRFR register.

When bit WCKCFG is set, the audio block is automatically disabled, clearing bit SAIxEN in the SAI_xCR1 register via hardware.

The above formula is intended to guarantee that the number of MCLK pulses by bit clock is an even integer in the audio frame with a 50% duty cycle bit clock generation to guarantee the good quality of the audio sounds or acquisitions.

29.14 Interrupt sources

The SAI has 7 possible interrupt sources as illustrated by *Table* .

Table 131. Interrupt sources

Interrupt source	Interrupt group	Audio block mode	Interrupt enable	Interrupt clear
FREQ	FREQ	Master or Slave Receiver or transmitter	FREQIE in SAI_xIM register	Depend on: - FIFO threshold setting (FLTH bits in SAI_CR2) - Communication direction transmitter or receiver for more details please refer to Internal FIFOs section
OVRUDR	ERROR	Master or Slave Receiver or transmitter	OVRUDRIE in SAI_xIM register	COVRUDR = 1 in SAI_xCLRFR register
AFSDET	ERROR	Slave (Not used in AC'97 mode)	AFSDETIE in SAI_xIM register	CAFSDET = 1 in SAI_xCLRFR register
LFSDET	ERROR	Slave (Not used in AC'97 mode)	LFSDETIE in SAI_xIM register	CLFSDET = 1 in SAI_xCLRFR register
CNRDY	ERROR	Slave (Only in AC'97 mode)	CNRDYIE in SAI_xIM register	CCNRDY = 1 in SAI_xCLRFR register
MUTEDET	MUTE	Master or slave Receiver mode only	MUTEDETIE in SAI_xIM register	CMUTEDET = 1 in SAI_xCLRFR register
WCKCFG	ERROR	Master with NODIV = 0 in the SAI_xCR1 register	WCKCFGIE in SAI_xIM register	CWCKCFG = 1 in SAI_xCLRFR register

Below are the SAI configuration steps to follow when an interrupt occurs:

1. Disable SAI interrupt.
2. Configure SAI.
3. Configure SAI interrupt source.
4. Enable SAI.

29.15 Disabling the SAI

The audio block in the SAI can be disabled at any moment by clearing bit SAIxEN in the SAI_xCR1 register. All the frames that have already started will be automatically completed before the total extinction of the SAI. Bit SAIxEN in the SAI_xCR1 register will stay high until the SAI is completely switched-off at the end of the current audio frame transfer.

If there is an audio block in the SAI synchronous with the other one, the one which is the master must be disabled first.

29.16 SAI DMA interface

In order to free the CPU and to optimize the bus bandwidth, each SAI audio block has an independent DMA interface in order to read or to write into the SAI_xDR register (to hit the internal FIFO). There is one DMA channel per audio block following basic DMA request/acknowledge protocol.

To configure the audio block to transfer through the DMA interface, set bit DMAEN in the SAI_xCR1 register. The DMA request is managed directly by the FIFO controller depend of FIFO threshold level (for more details please refer to Internal FIFOs section). DMA direction is linked to the SAI audio block configuration:

- If the audio block is a transmitter, the audio block's FIFO controller outputs a DMA request to load the FIFO with data written in the SAI_xDR register.
- If the audio block is a receiver, the DMA request will concern read operations from the SAI_xDR register.

Below are the SAI configuration steps followed when DMA is used:

1. Configure SAI and FIFO Threshold level (in order to specify when the DMA request to be launched)
2. Configure SAI DMA channel
3. Enable DMA
4. Enable SAI

Note: Before configuring the SAI block, the SAI DMA channel must be disabled.

29.17 SAI registers

29.17.1 SAI xConfiguration register 1 (SAI_xCR1) where x is A or B

Address offset: Block A: 0x004

Address offset: Block B: 0x024

Reset value: 0x0000 0040

31	30	29	28	27	26	25	24	23	22	21	20	19	18	17	16
Reserved								MCKDIV[3:0]				NODIV	Res.	DMAEN	SAIxEN
								rw	rw	rw	rw	rw		rw	rw

15	14	13	12	11	10	9	8	7	6	5	4	3	2	1	0
Reserved		OutDriv	MONO	SYNCEN[1:0]		CKSTR	LSBFIRST	DS[2:0]			Res.	PRTCFG[1:0]		MODE[1:0]	
		rw	rw	rw	rw	rw	rw	rw	rw	rw		rw	rw	rw	rw

Bits 31:24 Reserved, always read as 0.

Bit 23:20 MCKDIV[3:0]: *Master clock divider.* These bits are set and cleared by software.

0000: Divides by 1 the master clock input.

Otherwise, The Master clock frequency is calculated accordingly to the following formula:

MCLK_x = SAI_CK_x / (MCKDIV[3:0] * 2)

These bits have no meaning when the audio block is slave.

They have to be configured when the audio block is disabled.

Bit 19 **NODIV:** No divider. This bit is set and cleared by software.

0: Master Clock divider is enabled

1: No divider used in the clock generator (in this case Master Clock Divider bit has no effect)

Bit 18 Reserved, always read as 0.

Bit 17 **DMAEN**: DMA enable. This bit is set and cleared by software.

0: DMA is disabled

1: DMA is enabled

Note: In receiver mode, the bits MODE must be configured before setting bit DMAEN to avoid a DMA request since the audio block is transmitter after reset (default setting)

Bit 16 **SAIxEN**: Audio block enable where x is A or B. This bit is set by software. It is cleared by hardware, after disabling it by software (writing the bit low), the audio is completely disabled (waiting for the end of the current frame).

0: Audio block is disabled

1: Audio block is enabled: this bit can be set only if it is at 0 during the write operation (means the SAI is completely disabled before being re-enabled).

This bit allows to control the state of the audio block. If it is disabled somewhere in an audio frame, the on-going transfer will be completed and the cell will be totally disabled at the end of this audio frame transfer.

Note: When SAIx block is configured as master mode, clock must be present on the input of the SAI before setting SAIxEN bit.

Bits 15:14 Reserved, always read as 0.

Bit 13 **OUTDRIV**: Output drive. This bit is set and cleared by software.

0: Audio block output driven when SAIEN is set

1: Audio block output driven immediately after the setting of this bit.

Note: This bit has to be set before enabling the audio block but after the audio block configuration.

Bit 12 **MONO**: Mono mode. This bit is set and cleared by software.

0: Stereo mode

1: Mono mode.

This bit has a meaning only when the number of slots is equal to 2.

When the Mono mode is selected, the data of the slot 0 data is duplicated on the slot 1 when the audio block is a transmitter. In reception mode, the slot1 is discarded and only the data received from the slot 0 will be stored.

Refer to *Section 29.12.2* for more details.

Bits 11:10 **SYNCEN[1:0]:** Synchronization enable. This bit is set and cleared by software.

00: audio block is asynchronous.

01: audio block is synchronous with the other internal audio block. In this case audio block should be configured in Slave mode

10: Reserved.

11: Not used

These bits have to be configured when the audio block is disabled.

Bit 9 **CKSTR:** Clock strobing edge. This bit is set and cleared by software.

0: data strobing edge is falling edge of SCK

1: data strobing edge is rising edge of SCK

This bit has to be configured when the audio block is disabled.

Bit 8 **LSBFIRST:** Least significant bit first. This bit is set and cleared by software.

0: data is transferred with the MSB of the data first

1: data is transferred with the LSB of the data first

This bit has to be configured when the audio block is disabled.

This bit has no meaning in AC’97 audio protocol since in AC’97 data is transferred with the MSB of the data first.

Bits 7:5 **DS[2:0]:** Data size. These bits are set and cleared by software.

000: Not used

001: Not used

010: 8-bit

011: 10-bit

100: 16-bit

101: 20-bit

110: 24-bit

111: 32-bit

When the companding mode is selected (bit COMP[1:0]), these DS[1:0] are ignored since the data size is fixed to 8-bit mode by the algorithm itself.

These bits must be configured when the audio block is disabled.

Note: When AC’97 mode is selected the data sizes that can be used are: 16-bit or 20-bit only, else SAI behavior is not guaranteed.

Bit 4 Reserved, always read as 0.

Bits 3:2 **PRTCFG[1:0]:** Protocol configuration. These bits are set and cleared by software.

00: Free protocol
01: Not used
10: AC'97 protocol
11: Not used

Free protocol selection allows to use the powerful configuration of the audio block to address a specific audio protocol (like I2S, LSB/MSB justified, TDM, PCM/DSP...) setting most of the configuration register bits as well as frame configuration register.

These bits have to be configured when the audio block is disabled.

Bits 1:0 **MODE[1:0]:** Audio block mode. These bits are set and cleared by software.

00: Master transmitter
01: Master receiver
10: Slave transmitter
11: Slave receiver

These bits have to be configured when the audio block is disabled.

Note: In Master transmitter mode the audio block will start to generate the FS and clocks

29.17.2 SAI xConfiguration register 2 (SAI_xCR2) where x is A or B

Address offset: Block A: 0x008

Address offset: Block B: 0x028

Reset value: 0x0000 0000

31	30	29	28	27	26	25	24	23	22	21	20	19	18	17	16
Reserved															

15	14	13	12	11	10	9	8	7	6	5	4	3	2	1	0
COMP[1:0]		CPL	MUTECNT[5:0]						MUTE VAL	Mute	TRIS	FFLUS	FTH		
rw	rw	rw	rw	rw	rw	rw	rw	rw	rw	rw	rw	rw	rw	rw	rw

Bits 31:16 Reserved, always read as 0

Bits 15:14 **COMP[1:0]**: Companding mode. These bits are set and cleared by software.

00: No companding algorithm
01: Reserved.
10: µ-Law algorithm
11: A-Law algorithm
The µ-Law and the A-Law log are a part of the CCITT G.711 recommendation, the type of complement that will be used depends on *ComPLement bit*.
The data expansion or data compression are determined by the state of bit MODE[0].
The data compression is applied if the audio block is configured as a transmitter.
The data expansion is automatically applied when the audio block is configured as a receiver.
Refer to *Section 29.12.3* for more details.

Note: Companding mode is applicable only when TDM is selected.

Bit 13 **CPL**: Complement bit. This bit is set and cleared by software.

It defines the type of complement to be used for companding mode
0: 1's complement representation.
1: 2's complement representation.

Note: This bit has effect only when the companding mode is µ-Law algorithm or A-Law algorithm.

Bits 12:7 **MUTECNT[5:0]**: Mute counter. These bits are set and cleared by software.

These bits are used only in reception mode.
The value set in these bits is compared to the number of consecutive mute frames detected in reception. When the number of mute frames is equal to this value, the flag MUTEDET will be set and an interrupt will be generated if bit MUTEDETIE is set.
Refer to *Section 29.12.1* for more details.

Bit 6 **MUTEVAL**: Mute value. This bit is set and cleared by software.This bit has to be written before enabling the audio block: SAIxEN.

0: Bit value 0 is sent during the MUTE mode.

1: Last values are sent during the MUTE mode.

This bit has a meaning only when the audio block is a transmitter and when the number of slots is lower or equal to 2 and if the MUTE bit is set.

If more slots are declared, the bit value sent during the transmission in mute mode will be equal to 0, whatever the value of this MUTEVAL bit.

if the number of slot is lower or equal to 2 and MUTEVAL = 1, the mute value transmitted for each slot will be the ones sent during the previous frame.

Refer to *Section 29.12.1* for more details.

Bit 5 **MUTE:** Mute. This bit is set and cleared by software.

0: No Mute mode.

1: Mute mode enabled.

This bit has a meaning only when the audio block is a transmitter. The MUTE value is linked to the MUTEVAL value if the number of slots is lower or equal to 2, or equal to 0 if it is greater than 2.

Refer to *Section 29.12.1* for more details.

Bit 4 **TRIS**: Tristate management on data line. This bit is set and cleared by software.

0: SD output line is still driven by the SAI when a slot is inactive.

1: SD output line is released (HI-Z) at the end of the last data bit of the last active slot if the next one is inactive.

This bit has a meaning only if the audio block is configured to be a transmitter.

This bit should be configured when SAI is disabled.

Refer to *Section 29.12.4* for more details.

Bit 3 **FFLUSH:** FIFO flush. This bit is set by software. It is always read low.

0: No FIFO flush.

1: FIFO flush.

Writing 1 to the bit triggers the FIFO Flush. All the internal FIFO pointers (read and write) are cleared.

Data still present in the FIFO will be lost in such case (no more transmission or received data lost).

This bit should be configured when SAI is disabled.

Before flushing SAI, DMA stream/interruption must be disabled

Bits 2:0 **FTH:** FIFO threshold. This bit is set and cleared by software.

000: FIFO empty

001: ¼ FIFO

010: ½ FIFO

011: ¾ FIFO

100: FIFO full

101: Reserved

110: Reserved

111: Reserved

29.17.3 SAI xFrame configuration register (SAI_XFRCR) where x is A or B

Address offset: Block A: 0x00C

Address offset: Block B: 0x02C

Reset value: 0x0000 0007

Note: This register has no meaning in AC'97 audio protocol

31	30	29	28	27	26	25	24	23	22	21	20	19	18	17	16
Reserved													FSOFF	FSPOL	FSDEF
													rw	rw	r

15	14	13	12	11	10	9	8	7	6	5	4	3	2	1	0
Res.	FSALL[6:0]							FRL[7:0]							
	rw	rw	rw	rw	rw	rw	rw	rw	rw	rw	rw	rw	rw	rw	rw

Bits 31:19 Reserved, always read as 0.

Bit 18 **FSOFF**: Frame synchronization offset. This bit is set and cleared by software.
0: FS is asserted on the first bit of the slot 0.
1: FS is asserted one bit before the first bit of the slot 0.
This bit has no meaning and is not used in AC'97 audio block configuration.
This bit must be configured when the audio block is disabled.

Bit 17 **FSPOL**: Frame synchronization polarity. This bit is set and cleared by software
0: FS is active low (falling edge)
1: FS is active high (rising edge)
This bit is used to configure the level of the start of frame on the FS signal.
This bit has no meaning and is not used in AC'97 audio block configuration.
This bit must be configured when the audio block is disabled.

Bit 16 **FSDEF**: Frame synchronization definition. This bit is set and cleared by software.
0: FS signal is a start frame signal
1: FS signal is a start of frame signal + channel side identification
When the bit is set, the number of slots defined in the SAI_ASLOTR register has to be even. It means that there will be half of this number of slots dedicated for the left channel and the other slots for the right channel (e.g: this bit has to be set for I2S or MSB/LSB-justified protocols...)
This bit has no meaning and is not used in AC'97 audio block configuration.
This bit must be configured when the audio block is disabled.

Bit 15 Reserved, always read as 0.

Bits 14:8 **FSALL[6:0]**: Frame synchronization active level length. These bits are set and cleared by software

The value set in these bits specifies the length in number of bit clock (SCK) + 1 (FSALL[6:0] + 1) of the active level of the FS signal in the audio frame

These bits have no meaning and are not used in AC'97 audio block configuration.

These bits must be configured when the audio block is disabled.

Bits 7:0 **FRL[7:0]**: Frame length. These bits are set and cleared by software.

They define the length of the audio frame. More precisely, these bits define the number of SCK clocks for each audio frame.

The number of bits in the frame is equal to FRL[7:0] + 1.

The minimum number of bits to transfer in an audio frame has to be equal to 8 or else the audio block will have unexpected behavior. This is the case when the data size is 8-bit and only one slot 0 is defined in NBSLOT[4:0] in the SAI_ASLOTR register (NBSLOT[3:0] = 0000).

In master mode, if the master clock MCLK_x pin is declared as an output, the frame length should be aligned to a number equal to a power of 2, from 8 to 256 in order to keep in an audio frame, an integer number of MCLK pulses by bit clock for correct operation for external DAC/ADC inside the decoders.

The Frame length should be even.

These bits have no meaning and are not used in AC'97 audio block configuration.

29.17.4 SAI xSlot register (SAI_xSLOTR) where x is A or B

Address offset: Block A: 0x010

Address offset: Block B: 0x030

Reset value: 0x0000 0000

Note: This register has no meaning in AC'97 audio protocol

31	30	29	28	27	26	25	24	23	22	21	20	19	18	17	16
SLOTEN[15:0]															
rw	rw	rw	rw	rw	rw	rw	rw	rw	rw	rw	rw	rw	rw	rw	rw

15	14	13	12	11	10	9	8	7	6	5	4	3	2	1	0
Reserved				NBSLOT[3:0]				SLOTSZ[1:0]		Res	FBOFF[4:0]				
				rw	rw	rw	rw	rw	rw		rw	rw	rw	rw	rw

Bits 31:16 **SLOTEN[15:0]**: Slot enable. These bits are set and cleared by software.
Each bit of the SLOTEN bits identify a slot position from 0 to 15 (maximum 16 slots)
0: Inactive slot.
1: Active slot.
These bits must be set when the audio block is disabled.
They are ignored in AC'97 mode.

Bits 15:12 Reserved, always read as 0.

Bits 11:8 **NBSLOT[3:0]**: Number of slots in an audio frame. These bits are set and cleared by software.
The value set in these bits register represents the number of slots + 1 in the audio frame (including the number of inactive slots). The maximum number of slots is 16.
The number of slots should be even if bit FSDEF in the SAI_AFRCR register is set.
If the size is greater than the data size, the remaining bits will be forced to 0 if bit TRIS in the SAI_xCR1 register is clear, otherwise they will be forced to 0 if the next slot is active or the SD line will be forced to HI-Z if the next slot is inactive and bit TRIS = 1.
These bits must be set when the audio block is disabled.
They are ignored in AC'97 omode.

Bits 7:6 **SLOTSZ[1:0]**: Slot size
This bits is set and cleared by software.
00: The slot size is equivalent to the data size (specified in DS[3:0] in the SAI_ACR1 register).
01: 16-bit
10: 32-bit
11: Reserved
The slot size must be greater or equal to the data size. If this condition is not respected, the behavior of the SAI will be undetermined.
These bits must be set when the audio block is disabled.
They are ignored in AC'97 mode.

Bit 1 Reserved, always read as 0.

Bits 4:0 **FBOFF[4:0]**: First bit offset
These bits are set and cleared by software.
The value set in these bits represents the position of the first data transfer bit in the slot. It represents an offset value. During this offset phase 0 value are sent on the data line for transmission mode. For reception mode, the received bit are discarded during the offset phase.
These bits must be set when the audio block is disabled.
They are ignored in AC'97 mode.

29.17.5 SAI xInterrupt mask register (SAI_xIM) where x is A or B

Address offset: blockA: 0x014

Address offset: block B: 0x034

Reset value: 0x0000 0000

31	30	29	28	27	26	25	24	23	22	21	20	19	18	17	16
Reserved															

15	14	13	12	11	10	9	8	7	6	5	4	3	2	1	0
Reserved									LFSDETIE	AFSDETIE	CNRDYIE	FREQIE	WCKCFGIE	MUTEDETIE	OVRUDRIE
									rw	rw	rw	rw	rw	rw	rw

Bits 31:7 Reserved, always read as 0.

Bit 6 **LFSDETIE**: Late frame synchronization detection interrupt enable. This bit is set and cleared by software.

0: Interrupt is disabled

1: Interrupt is enabled

When this bit is set, an interrupt will be generated if the LFSDET bit is set in the SAI_ASR register. This bit has no meaning in AC'97 mode. It has no meaning also if the audio block is master.

Bit 5 **AFSDETIE**: Anticipated frame synchronization detection interrupt enable. This bit is set and cleared by software.

0: Interrupt is disabled

1: Interrupt is enabled

When this bit is set, an interrupt will be generated if the AFSDET bit in the SAI_ASR register is set. This bit has no meaning in AC'97 mode. It has no meaning also if the audio block is master.

Bit 4 **CNRDYIE**: Codec not ready interrupt enable (ac'97). This bit is set and cleared by software.

0: Interrupt is disabled

1: Interrupt is enabled

When the interrupt is enabled, the audio block will detect in the slot 0 (tag0) of the AC'97 frame if the codec connected on this line is ready or not. If not, the flag CNRDY in the SAI_ASR register will be set and an interruption will be generated.

This bit has a meaning only if the AC97 mode is selected (bit PRTCFG[1:0]) and the audio block is a receiver.

Bit 3 **FREQIE**: FIFO request interrupt enable. This bit is set and cleared by software.

0: Interrupt is disabled

1: Interrupt is enabled

When this bit is set, an interrupt will be generated if the FREQ bit in the SAI_ASR register is set.

In receiver mode, the bit MODE must be configured before setting bit FREQIE to avoid a parasitic interruption since the audio block is a transmitter (default setting).

Bit 2 **WCKCFGIE**: Wrong clock configuration interrupt enable. This bit is set and cleared by software.

0: Interrupt is disabled

1: Interrupt is enabled

This bit is considered only if the audio block is configured as master (MODE[1] = 0 in the SAI_ACR1 register) and bit NODIV = 0 in the SAI_xCR1 register.

It generates an interrupt if the flag WCKCFG in the SAI_ASR register is set.

Note: This bit is used only in TDM mode and has no meaning for other modes.

Bit 1 **MUTEDETIE**: Mute detection interrupt enable. This bit is set and cleared by software.

0: Interrupt is disabled

1: Interrupt is enabled

When this bit is set, an interrupt will be generated if the MUTEDET bit in the SAI_ASR register is set.

This bit has a meaning only if the audio block is configured in receiver mode.

Bit 0 **OVRUDRIE**: Overrun/underrun interrupt enable. This bit is set and cleared by software.

0: Interrupt is disabled

1: Interrupt is enabled

When this bit is set, an interrupt will be generated if the OVRUDR bit in the SAI_ASR register is set.

29.17.6 SAI xStatus register (SAI_xSR) where x is A or B

Address offset: block A: 0x018

Address offset: block B: 0x038

Reset value: 0x0000 0008

31	30	29	28	27	26	25	24	23	22	21	20	19	18	17	16
Reserved													FLTH		
													r	r	r

15	14	13	12	11	10	9	8	7	6	5	4	3	2	1	0
Reserved									LFSDET	AFSDET	CNRDY	FREQ	WCKCFG	MUTEDET	OVRUDR
									r	r	r	r	r	r	r

Bits 31:19 Reserved, always read as 0.

Bits 18:16 **FLTH**: FIFO level threshold. This bit is read only. The FIFO level threshold flag is managed only by hardware and its setting depends on SAI block configuration (transmitter or receiver mode).

If SAI block is configured as transmitter:
000: FIFO_empty
001: FIFO <= ¼ but not empty
010: ¼ < FIFO <= ½
011: ½ < FIFO <= ¾
100: ¾ < FIFO but not full
101: FIFO full
If SAI block is configured as receiver:
000: FIFO_empty
001: FIFO < ¼ but not empty
010: ¼ <= FIFO < ½
011: ½ =< FIFO < ¾
100: ¾ =< FIFO but not full
101: FIFO full

Bits 15:7 Reserved, always read as 0.

Bit 6 **LFSDET**: Late frame synchronization detection. This bit is read only.
0: No error.
1: Frame synchronization signal is not present at the right time.
This flag can be set only if the audio block is configured in Slave mode.
It is not used in AC'97 mode.
It may generate an interrupt if bit LFSDETIE in the SAI_xIM register is set.
This flag is cleared when the software sets bit CLFSDET in the SAI_xCLRFR register

Bit 5 **AFSDET**: Anticipated frame synchronization detection. This bit is read only.
0: No error.
1: Frame synchronization signal is detected earlier than expected.
This flag can be set only if the audio block is configured in Slave mode.
It is not used in AC'97.
It may generate an interrupt if bit AFSDETIE in the SAI_xIM register is set.
This flag is cleared when the software sets bit CAFSDET in the SAI_xCLRFR register

Bit 4 **CNRDY**: Codec not ready. This bit is read only.

0: The external AC'97 codec is ready

1: The external AC'97 codec is not ready

This bit is used only when the AC'97 audio protocol is selected in the SAI_xCR1 register and is configured in receiver mode.

It may generate an interrupt if bit CNRDYIE in the SAI_xIM register is set.

This flag is cleared when the software sets bit CCNRDY in the SAI_xCLRFR register

Bit 3 **FREQ**: FIFO request. This bit is read only.

0: No FIFO request.

1: FIFO request to read or to write the SAI_xDR.

The request depends on the audio block configuration.

If configured in transmission, the FIFO request concerns a write request operation in the SAI_xDR.

If configured in reception, the FIFO request concerns a read request operation from the SAI_xDR.

This flag can generate an interrupt if bit FREQIE in the SAI_xIM register is set.

Bit 2 **WCKCFG**: Wrong clock configuration flag. This bit is read only.

0: The clock configuration is correct

1: The clock configuration does not respect the rule concerning the frame length specification defined in *Section 29.7* (configuration of FRL[7:0] bit in the SAI_x FRCR register)

This bit is used only when the audio block is master (MODE[1] = 0 in the SAI_xCR1 register) and when NODIV = 0 in the SAI_xCR1 register.

It may generate an interrupt if bit WCKCFGIE in the SAI_xIM register is set.

This flag is cleared when the software sets bit CWCKCFG in the SAI_xCLRFR register

Bit 1 **MUTEDET**: Mute detection. This bit is read only.

0: No MUTE detection on the SD input line

1: MUTE value detected on the SD input line (0 value) for a specified number of consecutive audio frame

This flag is set if consecutive 0 values are received in each slot of an audio frame and for a consecutive number of audio frames (set in the MUTECNT bit in the SAI_xCR2 register).

It may generate an interrupt if bit MUTEDETIE in the SAI_xIM register is set.

This flag is cleared when the software sets bit CMUTEDET in the SAI_xCLRFR register.

Bit 0 **OVRUDR**: Overrun / underrun. This bit is read only.

0: No overrun/underrun error.

1: Overrun/underrun error detection.

The overrun condition can occur only when the audio block is configured in reception.

The underrun condition can occur only when the audio block is configured in transmission.

It may generate an interrupt if bit OVRUDRIE in the SAI_xIM register is set.

This flag is cleared when the software set bit COVRUDR bit in the SAI_xCLRFR register.

29.17.7 SAI xClear flag register (SAI_xCLRFR) where X is A or B

Address offset: block A: 0x01C

Address offset: block B: 0x03C

Reset value: 0x0000 0000

31	30	29	28	27	26	25	24	23	22	21	20	19	18	17	16
Reserved															

15	14	13	12	11	10	9	8	7	6	5	4	3	2	1	0
Reserved									CLFSDET	CAFSDET	CCNRDY	Reserved	CWCKCFG	CMUTEDET	COVRUDR
									rw	rw	rw		rw	rw	rw

Bits 31:7 Reserved, always read as 0.

Bit 6 **CLFSDET**: Clear late frame synchronization detection flag. This bit is write only.
Writing 1 in this bit clears the flag LFSDET in the SAI_xSR register.
It is not used in AC'97.
Reading this bit always returns the value 0.

Bit 5 .**CAFSDET**: Clear anticipated frame synchronization detection flag. This bit is write only.
Writing 1 in this bit clears the flag AFSDET in the SAI_xSR register.
It is not used in AC'97.
Reading this bit always returns the value 0.

Bit 4 **CCNRDY**: Clear codec not ready flag. This bit is write only.
Writing 1 in this bit clears the flag CNRDY in the SAI_xSR register.
This bit is used only when the AC'97 audio protocol is selected in the SAI_xCR1 register.
Reading this bit always returns the value 0.

Bit 3 Reserved, always read as 0.

Bit 2 **CWCKCFG**: Clear wrong clock configuration flag. This bit is write only.
Writing 1 in this bit clears the flag WCKCFG in the SAI_xSR register.
This bit is used only when the audio block is set as master (MODE[1] = 0 in the SAI_ACR1 register) and bit NODIV = 0 in the SAI_xCR1 register.
Reading this bit always returns the value 0.

Bit 1 **CMUTEDET**: Mute detection flag. This bit is write only.
Writing 1 in this bit clears the flag MUTEDET in the SAI_xSR register.
Reading this bit always returns the value 0.

Bit 0 **COVRUDR**: Clear overrun / underrun. This bit is write only.
Writing 1 in this bit clears the flag OVRUDR in the SAI_xSR register.
Reading this bit always returns the value 0.

29.17.8 SAI xData register (SAI_xDR) where x is A or B

Address offset: block A: 0x020

Address offset: block B: 0x040

Reset value: 0x0000 0000

31	30	29	28	27	26	25	24	23	22	21	20	19	18	17	16
DATA[31:16]															
rw	rw	rw	rw	rw	rw	rw	rw	rw	rw	rw	rw	rw	rw	rw	rw
15	14	13	12	11	10	9	8	7	6	5	4	3	2	1	0
DATA[15:0]															
rw	rw	rw	rw	rw	rw	rw	rw	rw	rw	rw	rw	rw	rw	rw	rw

Bits 31:0 **DATA[31:0]**: Data

A write into this register has the effect of loading the FIFO if the FIFO is not full.
A read from this register has to effect of draining-up the FIFO if the FIFO is not empty.

29.17.9 SAI register map

The following table summarizes the SAI registers.

Table 132. SAI register map and reset values

Offset	Register and reset value	31	30	29	28	27	26	25	24	23	22	21	20	19	18	17	16	15	14	13	12	11	10	9	8	7	6	5	4	3	2	1	0
0x0004 or 0x0024	SAI_xCR1	Reserved								MCJDIV[3:0]				NODIV	Res.	DMAEN	SAIxEN	Reserved.		OutDri	MONO	SYNCEN[1:0]		CKSTR	LSBFIRST	DS[2:0]			Res.	PRTCFG[1:0]		MODE[1:0]	
	Reset value									0	0	0	0	0		0	0			0	0	0	0	0	0	0	1	0		0	0	0	0
0x0008 or 0x0028	SAI_xCR2	Reserved																COMP[1:0]		CPL	MUTECN[5:0]						MUTE VAL	MUTE	TRIS	FFLUS	FTH		
	Reset value																	0	0	0	0	0	0	0	0	0	0	0	0	0	0	0	0
0x000Cor 0x002C	SAI_xFRCR	Reserved													FSOFF	FSPOL	FSDEF	Reserved	FSALL[6:0]							FRL[7:0]							
	Reset value														0	0	0		0	0	0	0	0	0	0	0	0	0	0	0	0	1	1	1
0x0010 or 0x0030	SAI_xSLOTR	SLOTEN[15:0]																Reserved				NBSLOT[3:0]				SLOTSZ[1:0}		Reserved	FBOFF[4:0]				
	Reset value	0	0	0	0	0	0	0	0	0	0	0	0	0	0	0	0					0	0	0	0	0	0		0	0	0	0	0
0x0014 or 0x0034	SAI_xIM	Reserved																									LFSDET	AFSDETIE	CNRDYIE	FREQIE	WCKCFG	MUTEDET	OVRUDRIE
	Reset value																										0	0	0	0	0	0	0
0x0018 or 0x0038	SAI_xSR	Reserved													FLVL[2:0]			Reserved									LFSDET	AFSDET	CNRDY	FREQ	WCKCFG	MUTEDET	OVRUDR
	Reset value														0	0	0										0	0	0	0	1	0	0

Table 132. SAI register map and reset values (continued)

Offset	Register and reset value	31	30	29	28	27	26	25	24	23	22	21	20	19	18	17	16	15	14	13	12	11	10	9	8	7	6	5	4	3	2	1	0
0x001C or 0x003C	SAI_xCLRFR	Reserved																									LFSDET	CAFSDET	CNRDY	Res.	WCKCFG	MUTEDET	OVRUDR
	Reset value																										0	0	0		0	0	0
0x0020 or 0x0040	SAI_xDR	DATA[31:0]																															
	Reset value	0	0	0	0	0	0	0	0	0	0	0	0	0	0	0	0	0	0	0	0	0	0	0	0	0	0	0	0	0	0	0	0

Refer to *Section 2.3: Memory map* for the register boundary addresses.

30 Universal synchronous asynchronous receiver transmitter (USART)

This section applies to the whole STM32F4xx family, unless otherwise specified.

30.1 USART introduction

The universal synchronous asynchronous receiver transmitter (USART) offers a flexible means of full-duplex data exchange with external equipment requiring an industry standard NRZ asynchronous serial data format. The USART offers a very wide range of baud rates using a fractional baud rate generator.

It supports synchronous one-way communication and half-duplex single wire communication. It also supports the LIN (local interconnection network), Smartcard Protocol and IrDA (infrared data association) SIR ENDEC specifications, and modem operations (CTS/RTS). It allows multiprocessor communication.

High speed data communication is possible by using the DMA for multibuffer configuration.

30.2 USART main features

- Full duplex, asynchronous communications
- NRZ standard format (Mark/Space)
- Configurable oversampling method by 16 or by 8 to give flexibility between speed and clock tolerance
- Fractional baud rate generator systems
  - Common programmable transmit and receive baud rate (refer to the datasheets for the value of the baud rate at the maximum APB frequency.
- Programmable data word length (8 or 9 bits)
- Configurable stop bits - support for 1 or 2 stop bits
- LIN Master Synchronous Break send capability and LIN slave break detection capability
  - 13-bit break generation and 10/11 bit break detection when USART is hardware configured for LIN
- Transmitter clock output for synchronous transmission
- IrDA SIR encoder decoder
  - Support for 3/16 bit duration for normal mode
- Smartcard emulation capability
  - The Smartcard interface supports the asynchronous protocol Smartcards as defined in the ISO 7816-3 standards
  - 0.5, 1.5 stop bits for Smartcard operation
- Single-wire half-duplex communication
- Configurable multibuffer communication using DMA (direct memory access)
  - Buffering of received/transmitted bytes in reserved SRAM using centralized DMA
- Separate enable bits for transmitter and receiver

- Transfer detection flags:
  - Receive buffer full
  - Transmit buffer empty
  - End of transmission flags
- Parity control:
  - Transmits parity bit
  - Checks parity of received data byte
- Four error detection flags:
  - Overrun error
  - Noise detection
  - Frame error
  - Parity error
- Ten interrupt sources with flags:
  - CTS changes
  - LIN break detection
  - Transmit data register empty
  - Transmission complete
  - Receive data register full
  - Idle line received
  - Overrun error
  - Framing error
  - Noise error
  - Parity error
- Multiprocessor communication - enter into mute mode if address match does not occur
- Wake up from mute mode (by idle line detection or address mark detection)
- Two receiver wakeup modes: Address bit (MSB, 9th bit), Idle line

30.3 USART functional description

The interface is externally connected to another device by three pins (see *Figure 296*). Any USART bidirectional communication requires a minimum of two pins: Receive Data In (RX) and Transmit Data Out (TX):

RX: Receive Data Input is the serial data input. Oversampling techniques are used for data recovery by discriminating between valid incoming data and noise.

TX: Transmit Data Output. When the transmitter is disabled, the output pin returns to its I/O port configuration. When the transmitter is enabled and nothing is to be transmitted, the TX pin is at high level. In single-wire and smartcard modes, this I/O is used to transmit and receive the data (at USART level, data are then received on SW_RX).

Through these pins, serial data is transmitted and received in normal USART mode as frames comprising:

- An Idle Line prior to transmission or reception
- A start bit
- A data word (8 or 9 bits) least significant bit first
- 0.5,1, 1.5, 2 Stop bits indicating that the frame is complete
- This interface uses a fractional baud rate generator - with a 12-bit mantissa and 4-bit fraction
- A status register (USART_SR)
- Data Register (USART_DR)
- A baud rate register (USART_BRR) - 12-bit mantissa and 4-bit fraction.
- A Guardtime Register (USART_GTPR) in case of Smartcard mode.

Refer to *Section 30.6: USART registers on page 1007* for the definitions of each bit.

The following pin is required to interface in synchronous mode:

- **CK:** Transmitter clock output. This pin outputs the transmitter data clock for synchronous transmission corresponding to SPI master mode (no clock pulses on start bit and stop bit, and a software option to send a clock pulse on the last data bit). In parallel data can be received synchronously on RX. This can be used to control peripherals that have shift registers (e.g. LCD drivers). The clock phase and polarity are software programmable. In smartcard mode, CK can provide the clock to the smartcard.

The following pins are required in Hardware flow control mode:

- **CTS:** Clear To Send blocks the data transmission at the end of the current transfer when high
- **RTS:** Request to send indicates that the USART is ready to receive a data (when low).

Figure 296. USART block diagram

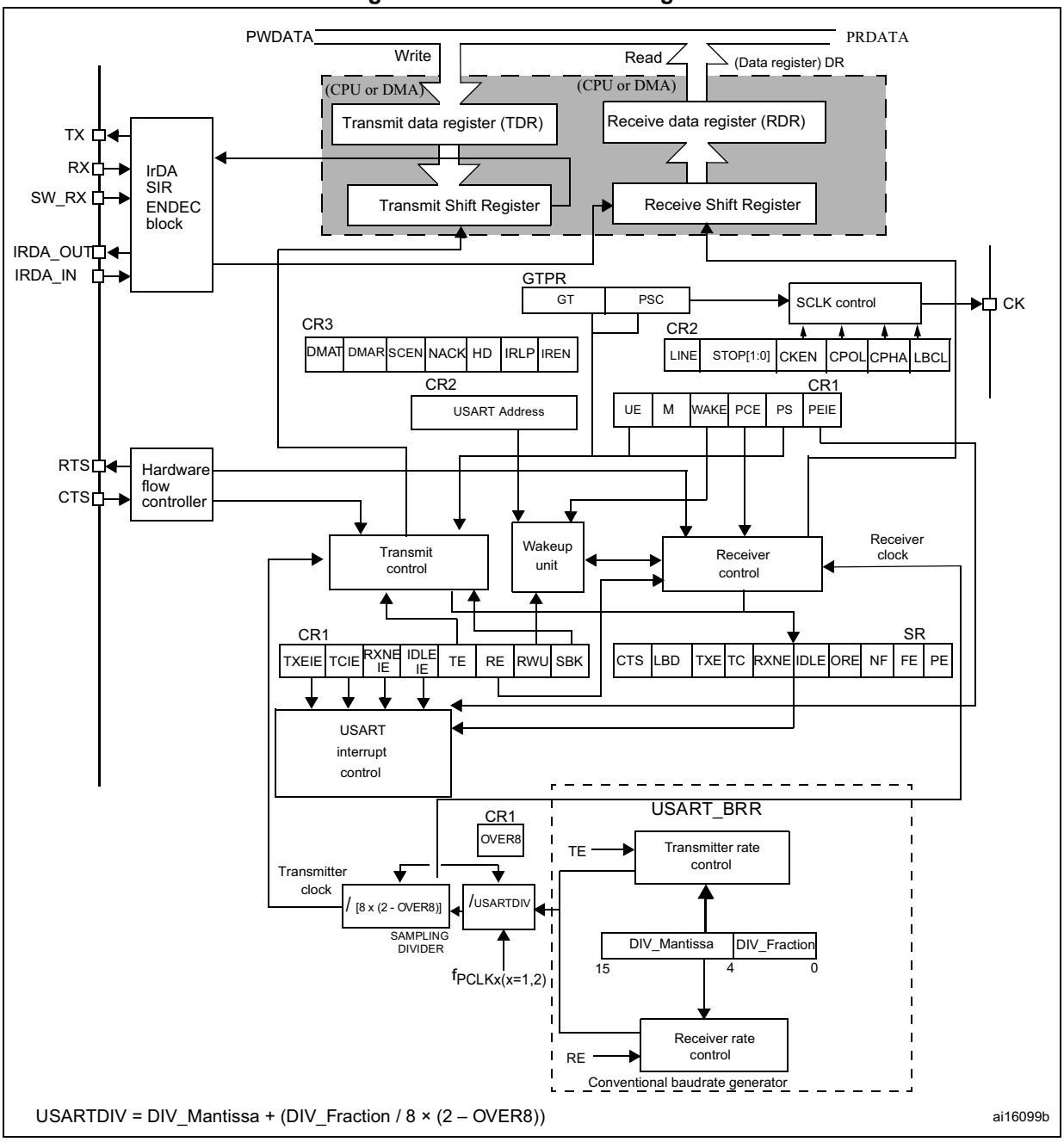

30.3.1 USART character description

Word length may be selected as being either 8 or 9 bits by programming the M bit in the USART_CR1 register (see *Figure 297*).

The TX pin is in low state during the start bit. It is in high state during the stop bit.

An ***Idle character*** is interpreted as an entire frame of “1”s followed by the start bit of the next frame which contains data (The number of “1” ‘s will include the number of stop bits).

A ***Break character*** is interpreted on receiving “0”s for a frame period. At the end of the break frame the transmitter inserts either 1 or 2 stop bits (logic “1” bit) to acknowledge the start bit.

Transmission and reception are driven by a common baud rate generator, the clock for each is generated when the enable bit is set respectively for the transmitter and receiver.

The details of each block is given below.

Figure 297. Word length programming

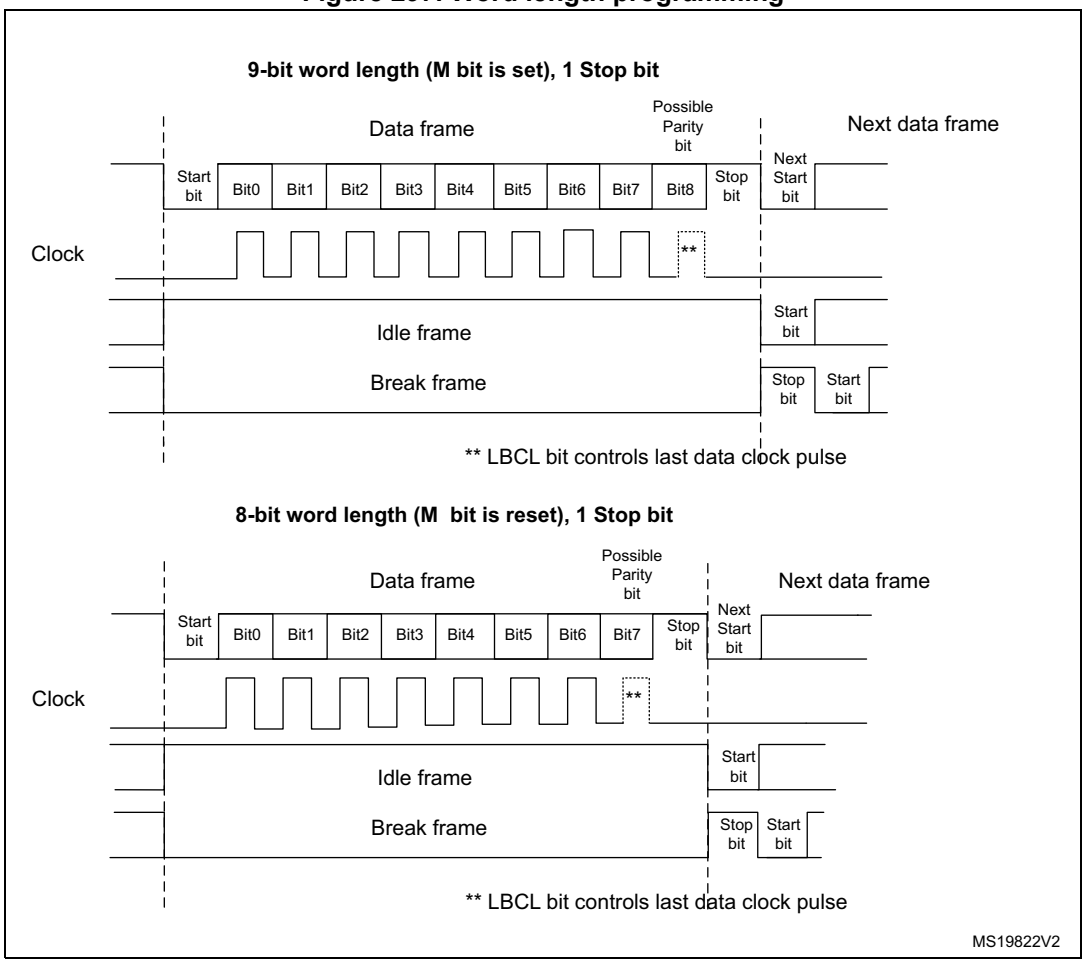

30.3.2 Transmitter

The transmitter can send data words of either 8 or 9 bits depending on the M bit status. When the transmit enable bit (TE) is set, the data in the transmit shift register is output on the TX pin and the corresponding clock pulses are output on the CK pin.

Character transmission

During an USART transmission, data shifts out least significant bit first on the TX pin. In this mode, the USART_DR register consists of a buffer (TDR) between the internal bus and the transmit shift register (see *Figure 296*).

Every character is preceded by a start bit which is a logic level low for one bit period. The character is terminated by a configurable number of stop bits.

The following stop bits are supported by USART: 0.5, 1, 1.5 and 2 stop bits.

Note: The TE bit should not be reset during transmission of data. Resetting the TE bit during the transmission will corrupt the data on the TX pin as the baud rate counters will get frozen. The current data being transmitted will be lost.

An idle frame will be sent after the TE bit is enabled.

Configurable stop bits

The number of stop bits to be transmitted with every character can be programmed in Control register 2, bits 13,12.

- ***1 stop bit***: This is the default value of number of stop bits.
- ***2 Stop bits***: This will be supported by normal USART, single-wire and modem modes.
- ***0.5 stop bit***: To be used when receiving data in Smartcard mode.
- ***1.5 stop bits***: To be used when transmitting and receiving data in Smartcard mode.

An idle frame transmission will include the stop bits.

A break transmission will be 10 low bits followed by the configured number of stop bits (when m = 0) and 11 low bits followed by the configured number of stop bits (when m = 1). It is not possible to transmit long breaks (break of length greater than 10/11 low bits).

Figure 298. Configurable stop bits

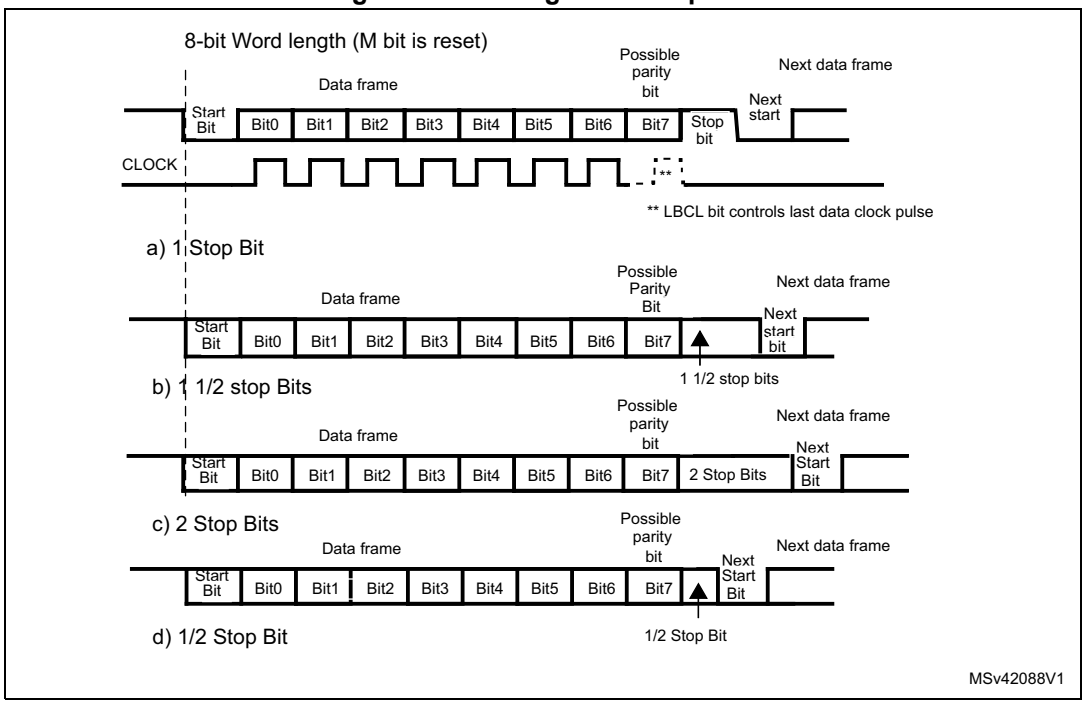

Procedure:

1. Enable the USART by writing the UE bit in USART_CR1 register to 1.
2. Program the M bit in USART_CR1 to define the word length.
3. Program the number of stop bits in USART_CR2.
4. Select DMA enable (DMAT) in USART_CR3 if Multi buffer Communication is to take place. Configure the DMA register as explained in multibuffer communication.
5. Select the desired baud rate using the USART_BRR register.
6. Set the TE bit in USART_CR1 to send an idle frame as first transmission.
7. Write the data to send in the USART_DR register (this clears the TXE bit). Repeat this for each data to be transmitted in case of single buffer.
8. After writing the last data into the USART_DR register, wait until TC=1. This indicates that the transmission of the last frame is complete. This is required for instance when the USART is disabled or enters the Halt mode to avoid corrupting the last transmission.

Single byte communication

Clearing the TXE bit is always performed by a write to the data register.

The TXE bit is set by hardware and it indicates:

- The data has been moved from TDR to the shift register and the data transmission has started.
- The TDR register is empty.
- The next data can be written in the USART_DR register without overwriting the previous data.

This flag generates an interrupt if the TXEIE bit is set.

When a transmission is taking place, a write instruction to the USART_DR register stores the data in the TDR register and which is copied in the shift register at the end of the current transmission.

When no transmission is taking place, a write instruction to the USART_DR register places the data directly in the shift register, the data transmission starts, and the TXE bit is immediately set.

If a frame is transmitted (after the stop bit) and the TXE bit is set, the TC bit goes high. An interrupt is generated if the TCIE bit is set in the USART_CR1 register.

After writing the last data into the USART_DR register, it is mandatory to wait for TC=1 before disabling the USART or causing the microcontroller to enter the low-power mode (see *Figure 299: TC/TXE behavior when transmitting*).

The TC bit is cleared by the following software sequence:

1. A read from the USART_SR register
2. A write to the USART_DR register

Note: The TC bit can also be cleared by writing a '0 to it. This clearing sequence is recommended only for Multibuffer communication.

Figure 299. TC/TXE behavior when transmitting

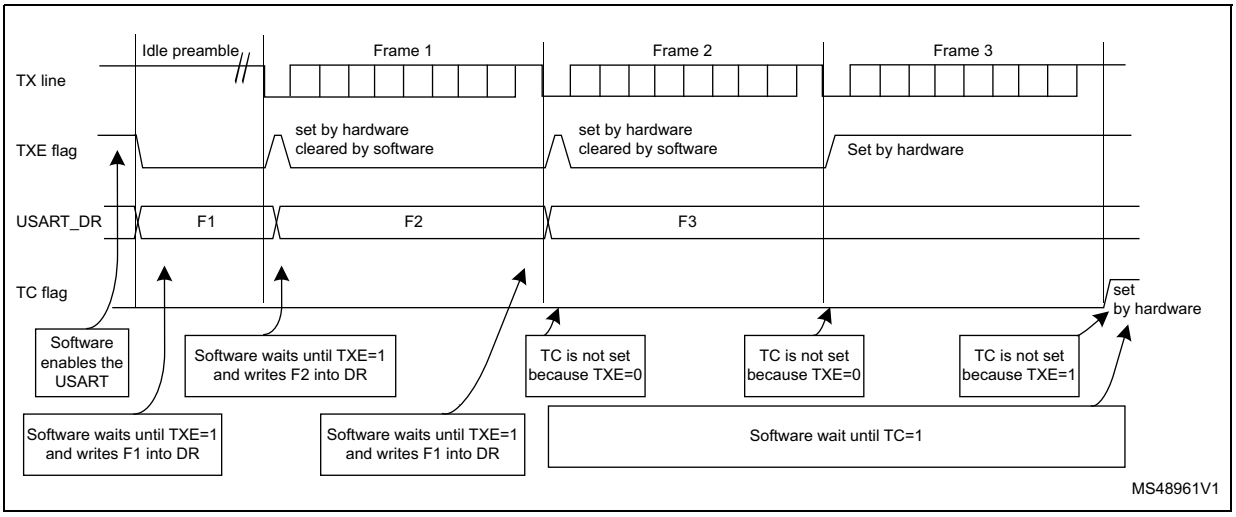

Break characters

Setting the SBK bit transmits a break character. The break frame length depends on the M bit (see *Figure 297*).

If the SBK bit is set to '1 a break character is sent on the TX line after completing the current character transmission. This bit is reset by hardware when the break character is completed (during the stop bit of the break character). The USART inserts a logic 1 bit at the end of the last break frame to guarantee the recognition of the start bit of the next frame.

Note: If the software resets the SBK bit before the commencement of break transmission, the break character will not be transmitted. For two consecutive breaks, the SBK bit should be set after the stop bit of the previous break.

Idle characters

Setting the TE bit drives the USART to send an idle frame before the first data frame.

30.3.3 Receiver

The USART can receive data words of either 8 or 9 bits depending on the M bit in the USART_CR1 register.

Start bit detection

The start bit detection sequence is the same when oversampling by 16 or by 8.

In the USART, the start bit is detected when a specific sequence of samples is recognized. This sequence is: 1 1 1 0 X 0 X 0 X 0 0 0 0.

Figure 300. Start bit detection when oversampling by 16 or 8

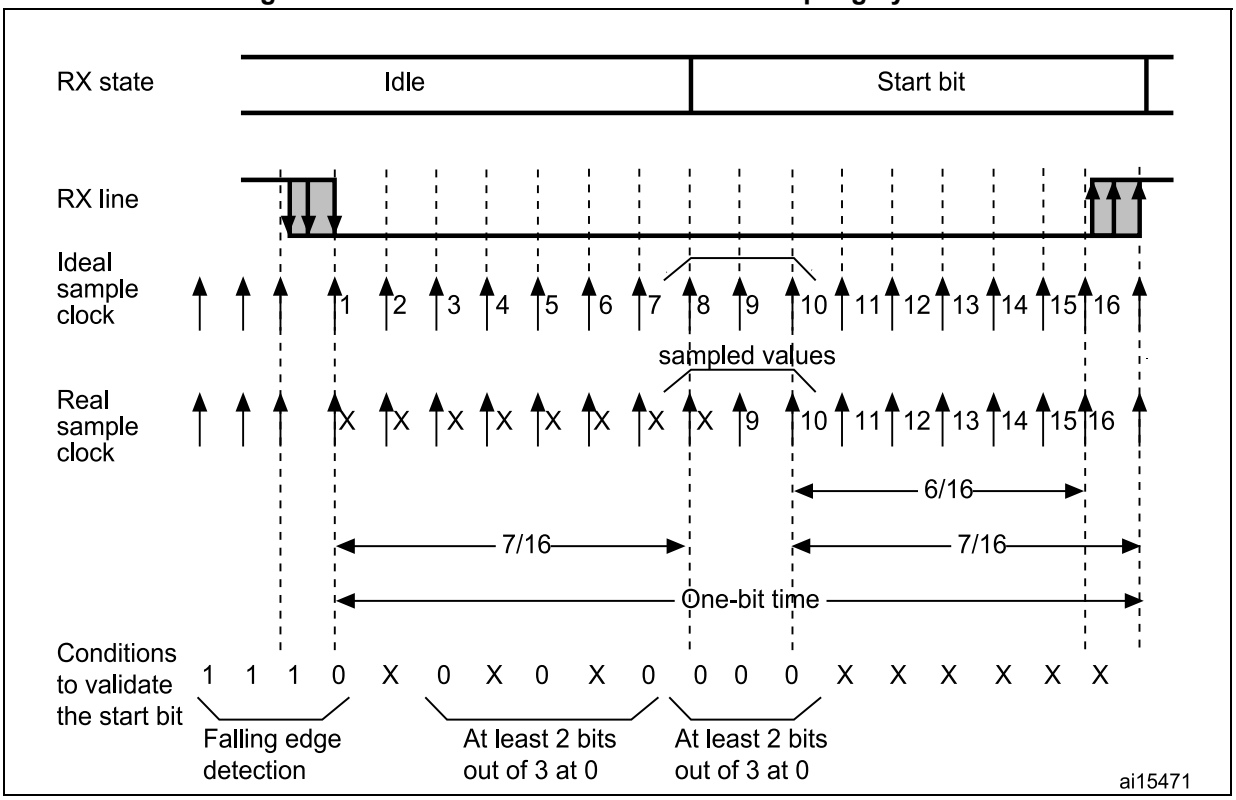

Note: If the sequence is not complete, the start bit detection aborts and the receiver returns to the idle state (no flag is set) where it waits for a falling edge.

The start bit is confirmed (RXNE flag set, interrupt generated if RXNEIE=1) if the 3 sampled bits are at 0 (first sampling on the 3rd, 5th and 7th bits finds the 3 bits at 0 and second sampling on the 8th, 9th and 10th bits also finds the 3 bits at 0).

The start bit is validated (RXNE flag set, interrupt generated if RXNEIE=1) but the NE noise flag is set if, for both samplings, at least 2 out of the 3 sampled bits are at 0 (sampling on the

3rd, 5th and 7th bits and sampling on the 8th, 9th and 10th bits). If this condition is not met, the start detection aborts and the receiver returns to the idle state (no flag is set).

If, for one of the samplings (sampling on the 3rd, 5th and 7th bits or sampling on the 8th, 9th and 10th bits), 2 out of the 3 bits are found at 0, the start bit is validated but the NE noise flag bit is set.

Character reception

During an USART reception, data shifts in least significant bit first through the RX pin. In this mode, the USART_DR register consists of a buffer (RDR) between the internal bus and the received shift register.

Procedure:

1. Enable the USART by writing the UE bit in USART_CR1 register to 1.
2. Program the M bit in USART_CR1 to define the word length.
3. Program the number of stop bits in USART_CR2.
4. Select DMA enable (DMAR) in USART_CR3 if multibuffer communication is to take place. Configure the DMA register as explained in multibuffer communication. STEP 3
5. Select the desired baud rate using the baud rate register USART_BRR
6. Set the RE bit USART_CR1. This enables the receiver which begins searching for a start bit.

When a character is received

- The RXNE bit is set. It indicates that the content of the shift register is transferred to the RDR. In other words, data has been received and can be read (as well as its associated error flags).
- An interrupt is generated if the RXNEIE bit is set.
- The error flags can be set if a frame error, noise or an overrun error has been detected during reception.
- In multibuffer, RXNE is set after every byte received and is cleared by the DMA read to the Data Register.
- In single buffer mode, clearing the RXNE bit is performed by a software read to the USART_DR register. The RXNE flag can also be cleared by writing a zero to it. The RXNE bit must be cleared before the end of the reception of the next character to avoid an overrun error.

Note: The RE bit should not be reset while receiving data. If the RE bit is disabled during reception, the reception of the current byte will be aborted.

Break character

When a break character is received, the USART handles it as a framing error.

Idle character

When an idle frame is detected, there is the same procedure as a data received character plus an interrupt if the IDLEIE bit is set.

Overrun error

An overrun error occurs when a character is received when RXNE has not been reset. Data can not be transferred from the shift register to the RDR register until the RXNE bit is cleared.

The RXNE flag is set after every byte received. An overrun error occurs if RXNE flag is set when the next data is received or the previous DMA request has not been serviced. When an overrun error occurs:

- The ORE bit is set.
- The RDR content will not be lost. The previous data is available when a read to USART_DR is performed.
- The shift register will be overwritten. After that point, any data received during overrun is lost.
- An interrupt is generated if either the RXNEIE bit is set or both the EIE and DMAR bits are set.
- The ORE bit is reset by a read to the USART_SR register followed by a USART_DR register read operation.

Note: The ORE bit, when set, indicates that at least 1 data has been lost. There are two possibilities:

- if RXNE=1, then the last valid data is stored in the receive register RDR and can be read,
- if RXNE=0, then it means that the last valid data has already been read and thus there is nothing to be read in the RDR. This case can occur when the last valid data is read in the RDR at the same time as the new (and lost) data is received. It may also occur when the new data is received during the reading sequence (between the USART_SR register read access and the USART_DR read access).

Selecting the proper oversampling method

The receiver implements different user-configurable oversampling techniques (except in synchronous mode) for data recovery by discriminating between valid incoming data and noise.

The oversampling method can be selected by programming the OVER8 bit in the USART_CR1 register and can be either 16 or 8 times the baud rate clock (*Figure 301* and *Figure 302*).

Depending on the application:

- select oversampling by 8 (OVER8=1) to achieve higher speed (up to $f_{PCLK}/8$). In this case the maximum receiver tolerance to clock deviation is reduced (refer to *Section 30.3.5: USART receiver tolerance to clock deviation on page 988*)
- select oversampling by 16 (OVER8=0) to increase the tolerance of the receiver to clock deviations. In this case, the maximum speed is limited to maximum $f_{PCLK}/16$

Programming the ONEBIT bit in the USART_CR3 register selects the method used to evaluate the logic level. There are two options:

- the majority vote of the three samples in the center of the received bit. In this case, when the 3 samples used for the majority vote are not equal, the NF bit is set
- a single sample in the center of the received bit

  Depending on the application:

  – select the three samples' majority vote method (ONEBIT=0) when operating in a noisy environment and reject the data when a noise is detected (refer to *Figure 133*) because this indicates that a glitch occurred during the sampling.

  – select the single sample method (ONEBIT=1) when the line is noise-free to increase the receiver's tolerance to clock deviations (see *Section 30.3.5: USART receiver tolerance to clock deviation on page 988*). In this case the NF bit will never be set.

When noise is detected in a frame:

- The NF bit is set at the rising edge of the RXNE bit.
- The invalid data is transferred from the Shift register to the USART_DR register.
- No interrupt is generated in case of single byte communication. However this bit rises at the same time as the RXNE bit which itself generates an interrupt. In case of multibuffer communication an interrupt will be issued if the EIE bit is set in the USART_CR3 register.

The NF bit is reset by a USART_SR register read operation followed by a USART_DR register read operation.

Note: Oversampling by 8 is not available in the Smartcard, IrDA and LIN modes. In those modes, the OVER8 bit is forced to '0 by hardware.

Figure 301. Data sampling when oversampling by 16

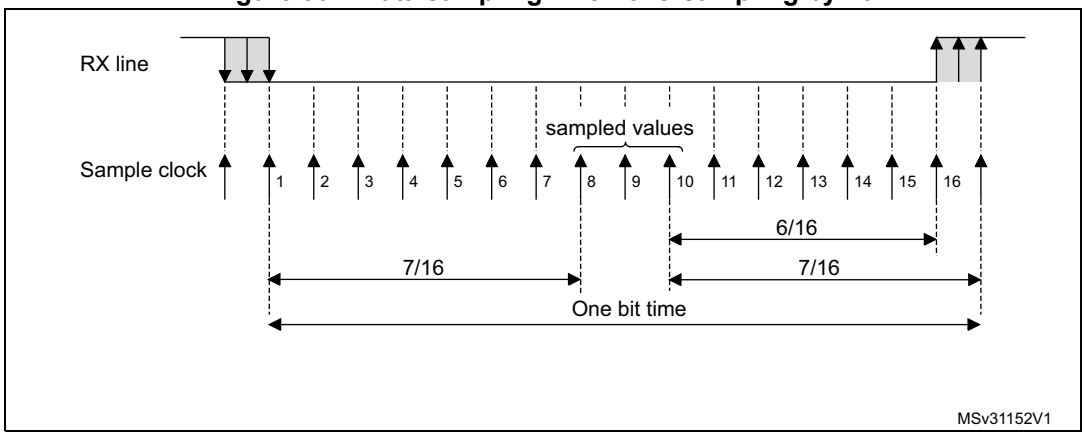

Figure 302. Data sampling when oversampling by 8

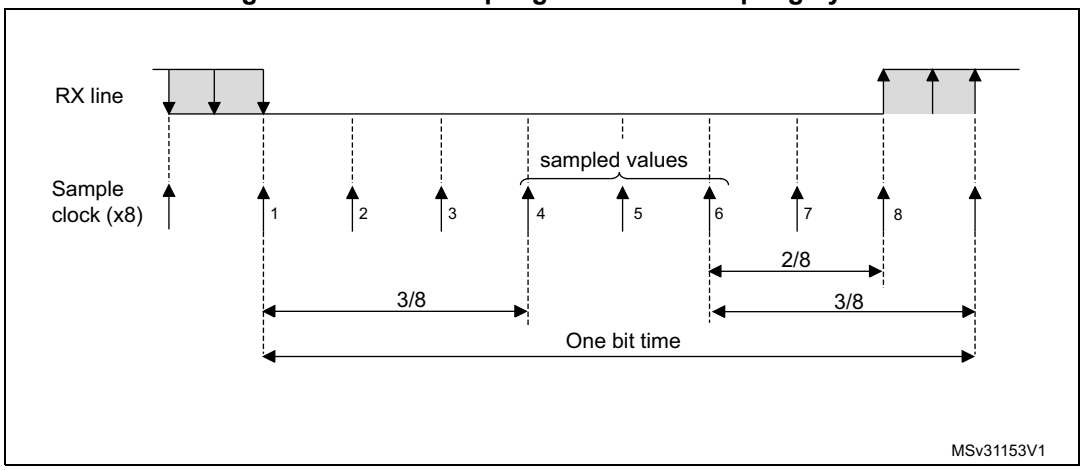

Table 133. Noise detection from sampled data

Sampled value	NE status	Received bit value
000	0	0
001	1	0
010	1	0
011	1	1
100	1	0
101	1	1
110	1	1
111	0	1

Framing error

A framing error is detected when:

The stop bit is not recognized on reception at the expected time, following either a de-synchronization or excessive noise.

When the framing error is detected:

- The FE bit is set by hardware
- The invalid data is transferred from the Shift register to the USART_DR register.
- No interrupt is generated in case of single byte communication. However this bit rises at the same time as the RXNE bit which itself generates an interrupt. In case of multibuffer communication an interrupt will be issued if the EIE bit is set in the USART_CR3 register.

The FE bit is reset by a USART_SR register read operation followed by a USART_DR register read operation.

Configurable stop bits during reception

The number of stop bits to be received can be configured through the control bits of Control Register 2 - it can be either 1 or 2 in normal mode and 0.5 or 1.5 in Smartcard mode.

1. ***0.5 stop bit (reception in Smartcard mode)***: No sampling is done for 0.5 stop bit. As a consequence, no framing error and no break frame can be detected when 0.5 stop bit is selected.
2. ***1 stop bit***: Sampling for 1 stop Bit is done on the 8th, 9th and 10th samples.
3. ***1.5 stop bits (Smartcard mode)***: When transmitting in smartcard mode, the device must check that the data is correctly sent. Thus the receiver block must be enabled (RE =1 in the USART_CR1 register) and the stop bit is checked to test if the smartcard has detected a parity error. In the event of a parity error, the smartcard forces the data signal low during the sampling - NACK signal-, which is flagged as a framing error. Then, the FE flag is set with the RXNE at the end of the 1.5 stop bit. Sampling for 1.5 stop bits is done on the 16th, 17th and 18th samples (1 baud clock period after the beginning of the stop bit). The 1.5 stop bit can be decomposed into 2 parts: one 0.5 baud clock period during which nothing happens, followed by 1 normal stop bit period during which sampling occurs halfway through. Refer to *Section 30.3.11: Smartcard on page 997* for more details.
4. ***2 stop bits***: Sampling for 2 stop bits is done on the 8th, 9th and 10th samples of the first stop bit. If a framing error is detected during the first stop bit the framing error flag will be set. The second stop bit is not checked for framing error. The RXNE flag will be set at the end of the first stop bit.

30.3.4 Fractional baud rate generation

The baud rate for the receiver and transmitter (Rx and Tx) are both set to the same value as programmed in the Mantissa and Fraction values of USARTDIV.

Equation 1: Baud rate for standard USART (SPI mode included)

$$\text{Tx/Rx baud} = \frac{f_{CK}}{8 \times (2 - \text{OVER8}) \times \text{USARTDIV}}$$

Equation 2: Baud rate in Smartcard, LIN and IrDA modes

$$\text{Tx/Rx baud} = \frac{f_{CK}}{16 \times \text{USARTDIV}}$$

USARTDIV is an unsigned fixed point number that is coded on the USART_BRR register.

- When OVER8=0, the fractional part is coded on 4 bits and programmed by the DIV_fraction[3:0] bits in the USART_BRR register
- When OVER8=1, the fractional part is coded on 3 bits and programmed by the DIV_fraction[2:0] bits in the USART_BRR register, and bit DIV_fraction[3] must be kept cleared.

Note: The baud counters are updated to the new value in the baud registers after a write operation to USART_BRR. Hence the baud rate register value should not be changed during communication.

How to derive USARTDIV from USART_BRR register values when OVER8=0

Example 1:

If DIV_Mantissa = 0d27 and DIV_Fraction = 0d12 (USART_BRR = 0x1BC), then

Mantissa (USARTDIV) = 0d27

Fraction (USARTDIV) = 12/16 = 0d0.75

Therefore USARTDIV = 0d27.75

Example 2:

To program USARTDIV = 0d25.62

This leads to:

DIV_Fraction = 16*0d0.62 = 0d9.92

The nearest real number is 0d10 = 0xA

DIV_Mantissa = mantissa (0d25.620) = 0d25 = 0x19

Then, USART_BRR = 0x19A hence USARTDIV = 0d25.625

Example 3:

To program USARTDIV = 0d50.99

This leads to:

DIV_Fraction = 16*0d0.99 = 0d15.84

The nearest real number is 0d16 = 0x10 => overflow of DIV_frac[3:0] => carry must be added up to the mantissa

DIV_Mantissa = mantissa (0d50.990 + carry) = 0d51 = 0x33

Then, USART_BRR = 0x330 hence USARTDIV = 0d51.000

How to derive USARTDIV from USART_BRR register values when OVER8=1

Example 1:

If DIV_Mantissa = 0x27 and DIV_Fraction[2:0]= 0d6 (USART_BRR = 0x1B6), then

Mantissa (USARTDIV) = 0d27

Fraction (USARTDIV) = 6/8 = 0d0.75

Therefore USARTDIV = 0d27.75

Example 2:

To program USARTDIV = 0d25.62

This leads to:

DIV_Fraction = 8*0d0.62 = 0d4.96

The nearest real number is 0d5 = 0x5

DIV_Mantissa = mantissa (0d25.620) = 0d25 = 0x19

Then, USART_BRR = 0x195 => USARTDIV = 0d25.625

Example 3:

To program USARTDIV = 0d50.99

This leads to:

DIV_Fraction = 8*0d0.99 = 0d7.92

The nearest real number is 0d8 = 0x8 => overflow of the DIV_frac[2:0] => carry must be added up to the mantissa

DIV_Mantissa = mantissa (0d50.990 + carry) = 0d51 = 0x33

Then, USART_BRR = 0x0330 => USARTDIV = 0d51.000

Table 134. Error calculation for programmed baud rates at f_{PCLK} = 8 MHz or f_{PCLK} = 12 MHz, oversampling by 16(1)

Oversampling by 16 (OVER8=0)							
Baud rate7		f_{PCLK} = 8 MHz			f_{PCLK} = 12 MHz		
S.No	Desired	Actual	Value programmed in the baud rate register	% Error = (Calculated - Desired) B.rate / Desired B.rate	Actual	Value programmed in the baud rate register	% Error
1	1.2 KBps	1.2 KBps	416.6875	0	1.2 KBps	625	0
2	2.4 KBps	2.4 KBps	208.3125	0.01	2.4 KBps	312.5	0
3	9.6 KBps	9.604 KBps	52.0625	0.04	9.6 KBps	78.125	0
4	19.2 KBps	19.185 KBps	26.0625	0.08	19.2 KBps	39.0625	0
5	38.4 KBps	38.462 KBps	13	0.16	38.339 KBps	19.5625	0.16
6	57.6 KBps	57.554 KBps	8.6875	0.08	57.692 KBps	13	0.16
7	115.2 KBps	115.942 KBps	4.3125	0.64	115.385 KBps	6.5	0.16
8	230.4 KBps	228.571 KBps	2.1875	0.79	230.769 KBps	3.25	0.16
9	460.8 KBps	470.588 KBps	1.0625	2.12	461.538 KBps	1.625	0.16
10	921.6 KBps	NA	NA	NA	NA	NA	NA
11	2 MBps	NA	NA	NA	NA	NA	NA
12	3 MBps	NA	NA	NA	NA	NA	NA

1. The lower the CPU clock the lower the accuracy for a particular baud rate. The upper limit of the achievable baud rate can be fixed with these data.

Table 135. Error calculation for programmed baud rates at f_{PCLK} = 8 MHz or f_{PCLK} =12 MHz, oversampling by 8(1)

Oversampling by 8 (OVER8 = 1)							
Baud rate		f_{PCLK} = 8 MHz			f_{PCLK} = 12 MHz		
S.No	Desired	Actual	Value programmed in the baud rate register	% Error = (Calculated - Desired) B.rate / Desired B.rate	Actual	Value programmed in the baud rate register	% Error
1	1.2 KBps	1.2 KBps	833.375	0	1.2 KBps	1250	0
2	2.4 KBps	2.4 KBps	416.625	0.01	2.4 KBps	625	0
3	9.6 KBps	9.604 KBps	104.125	0.04	9.6 KBps	156.25	0
4	19.2 KBps	19.185 KBps	52.125	0.08	19.2 KBps	78.125	0
5	38.4 KBps	38.462 KBps	26	0.16	38.339 KBps	39.125	0.16
6	57.6 KBps	57.554 KBps	17.375	0.08	57.692 KBps	26	0.16
7	115.2 KBps	115.942 KBps	8.625	0.64	115.385 KBps	13	0.16
8	230.4 KBps	228.571 KBps	4.375	0.79	230.769 KBps	6.5	0.16
9	460.8 KBps	470.588 KBps	2.125	2.12	461.538 KBps	3.25	0.16
10	921.6 KBps	888.889 KBps	1.125	3.55	923.077 KBps	1.625	0.16
11	2 MBps	NA	NA	NA	NA	NA	NA
12	3 MBps	NA	NA	NA	NA	NA	NA

1. The lower the CPU clock the lower the accuracy for a particular baud rate. The upper limit of the achievable baud rate can be fixed with these data.

Table 136. Error calculation for programmed baud rates at f_{PCLK} = 16 MHz or f_{PCLK} = 24 MHz, oversampling by 16(1)

Oversampling by 16 (OVER8 = 0)							
Baud rate		f_{PCLK} = 16 MHz			f_{PCLK} = 24 MHz		
S.No	Desired	Actual	Value programmed in the baud rate register	% Error = (Calculated - Desired) B.rate / Desired B.rate	Actual	Value programmed in the baud rate register	% Error
1	1.2 KBps	1.2 KBps	833.3125	0	1.2	1250	0
2	2.4 KBps	2.4 KBps	416.6875	0	2.4	625	0
3	9.6 KBps	9.598 KBps	104.1875	0.02	9.6	156.25	0
4	19.2 KBps	19.208 KBps	52.0625	0.04	19.2	78.125	0
5	38.4 KBps	38.369 KBps	26.0625	0.08	38.4	39.0625	0
6	57.6 KBps	57.554 KBps	17.375	0.08	57.554	26.0625	0.08

Table 136. Error calculation for programmed baud rates at f_{PCLK} = 16 MHz or f_{PCLK} = 24 MHz, oversampling by 16(1) (continued)

Oversampling by 16 (OVER8 = 0)							
Baud rate		f_{PCLK} = 16 MHz			f_{PCLK} = 24 MHz		
S.No	Desired	Actual	Value programmed in the baud rate register	% Error = (Calculated - Desired) B.rate / Desired B.rate	Actual	Value programmed in the baud rate register	% Error
7	115.2 KBps	115.108 KBps	8.6875	0.08	115.385	13	0.16
8	230.4 KBps	231.884 KBps	4.3125	0.64	230.769	6.5	0.16
9	460.8 KBps	457.143 KBps	2.1875	0.79	461.538	3.25	0.16
10	921.6 KBps	941.176 KBps	1.0625	2.12	923.077	1.625	0.16
11	2 MBps	NA	NA	NA	NA	NA	NA
12	3 MBps	NA	NA	NA	NA	NA	NA

1. The lower the CPU clock the lower the accuracy for a particular baud rate. The upper limit of the achievable baud rate can be fixed with these data.

Table 137. Error calculation for programmed baud rates at f_{PCLK} = 16 MHz or f_{PCLK} = 24 MHz, oversampling by 8(1)

Oversampling by 8 (OVER8=1)							
Baud rate		f_{PCLK} = 16 MHz			f_{PCLK} = 24 MHz		
S.No	Desired	Actual	Value programmed in the baud rate register	% Error = (Calculated - Desired) B.rate / Desired B.rate	Actual	Value programmed in the baud rate register	% Error
1	1.2 KBps	1.2 KBps	1666.625	0	1.2 KBps	2500	0
2	2.4 KBps	2.4 KBps	833.375	0	2.4 KBps	1250	0
3	9.6 KBps	9.598 KBps	208.375	0.02	9.6 KBps	312.5	0
4	19.2 KBps	19.208 KBps	104.125	0.04	19.2 KBps	156.25	0
5	38.4 KBps	38.369 KBps	52.125	0.08	38.4 KBps	78.125	0
6	57.6 KBps	57.554 KBps	34.75	0.08	57.554 KBps	52.125	0.08
7	115.2 KBps	115.108 KBps	17.375	0.08	115.385 KBps	26	0.16
8	230.4 KBps	231.884 KBps	8.625	0.64	230.769 KBps	13	0.16
9	460.8 KBps	457.143 KBps	4.375	0.79	461.538 KBps	6.5	0.16
10	921.6 KBps	941.176 KBps	2.125	2.12	923.077 KBps	3.25	0.16
11	2 MBps	2000 KBps	1	0	2000 KBps	1.5	0
12	3 MBps	NA	NA	NA	3000 KBps	1	0

1. The lower the CPU clock the lower the accuracy for a particular baud rate. The upper limit of the achievable baud rate can be fixed with these data.

Table 138. Error calculation for programmed baud rates at f_{PCLK} = 8 MHz or f_{PCLK} = 16 MHz, oversampling by 16(1)

Oversampling by 16 (OVER8=0)							
Baud rate		f_{PCLK} = 8 MHz			f_{PCLK} = 16 MHz		
S.No	Desired	Actual	Value programmed in the baud rate register	% Error = (Calculated - Desired)B.Rate /Desired B.Rate	Actual	Value programmed in the baud rate register	% Error
1.	2.4 KBps	2.400 KBps	208.3125	0.00%	2.400 KBps	416.6875	0.00%
2.	9.6 KBps	9.604 KBps	52.0625	0.04%	9.598 KBps	104.1875	0.02%
3.	19.2 KBps	19.185 KBps	26.0625	0.08%	19.208 KBps	52.0625	0.04%
4.	57.6 KBps	57.554 KBps	8.6875	0.08%	57.554 KBps	17.3750	0.08%
5.	115.2 KBps	115.942 KBps	4.3125	0.64%	115.108 KBps	8.6875	0.08%
6.	230.4 KBps	228.571 KBps	2.1875	0.79%	231.884 KBps	4.3125	0.64%
7.	460.8 KBps	470.588 KBps	1.0625	2.12%	457.143 KBps	2.1875	0.79%
8.	896 KBps	NA	NA	NA	888.889 KBps	1.1250	0.79%
9.	921.6 KBps	NA	NA	NA	941.176 KBps	1.0625	2.12%
10.	1.792 MBps	NA	NA	NA	NA	NA	NA
11.	1.8432 MBps	NA	NA	NA	NA	NA	NA
12.	3.584 MBps	NA	NA	NA	NA	NA	NA
13.	3.6864 MBps	NA	NA	NA	NA	NA	NA
14.	7.168 MBps	NA	NA	NA	NA	NA	NA
15.	7.3728 MBps	NA	NA	NA	NA	NA	NA

1. The lower the CPU clock the lower the accuracy for a particular baud rate. The upper limit of the achievable baud rate can be fixed with these data.

Table 139. Error calculation for programmed baud rates at f_{PCLK} = 8 MHz or f_{PCLK} = 16 MHz, oversampling by 8(1)

Oversampling by 8 (OVER8=1)							
Baud rate		f_{PCLK} = 8 MHz			f_{PCLK} = 16 MHz		
S.No	Desired	Actual	Value programmed in the baud rate register	% Error = (Calculated - Desired)B.Rate /Desired B.Rate	Actual	Value programmed in the baud rate register	% Error
1.	2.4 KBps	2.400 KBps	416.625	0.01%	2.400 KBps	833.375	0.00%
2.	9.6 KBps	9.604 KBps	104.125	0.04%	9.598 KBps	208.375	0.02%
3.	19.2 KBps	19.185 KBps	52.125	0.08%	19.208 KBps	104.125	0.04%

Table 139. Error calculation for programmed baud rates at f_{PCLK} = 8 MHz or f_{PCLK} = 16 MHz, oversampling by 8[1] (continued)

Oversampling by 8 (OVER8=1)							
Baud rate		f_{PCLK} = 8 MHz			f_{PCLK} = 16 MHz		
S.No	Desired	Actual	Value programmed in the baud rate register	% Error = (Calculated - Desired)B.Rate /Desired B.Rate	Actual	Value programmed in the baud rate register	% Error
4.	57.6 KBps	57.557 KBps	17.375	0.08%	57.554 KBps	34.750	0.08%
5.	115.2 KBps	115.942 KBps	8.625	0.64%	115.108 KBps	17.375	0.08%
6.	230.4 KBps	228.571 KBps	4.375	0.79%	231.884 KBps	8.625	0.64%
7.	460.8 KBps	470.588 KBps	2.125	2.12%	457.143 KBps	4.375	0.79%
8.	896 KBps	888.889 KBps	1.125	0.79%	888.889 KBps	2.250	0.79%
9.	921.6 KBps	888.889 KBps	1.125	3.55%	941.176 KBps	2.125	2.12%
10.	1.792 MBps	NA	NA	NA	1.7777 MBps	1.125	0.79%
11.	1.8432 MBps	NA	NA	NA	1.7777 MBps	1.125	3.55%
12.	3.584 MBps	NA	NA	NA	NA	NA	NA
13.	3.6864 MBps	NA	NA	NA	NA	NA	NA
14.	7.168 MBps	NA	NA	NA	NA	NA	NA
15.	7.3728 MBps	NA	NA	NA	NA	NA	NA

1. The lower the CPU clock the lower the accuracy for a particular baud rate. The upper limit of the achievable baud rate can be fixed with these data.

Table 140. Error calculation for programmed baud rates at f_{PCLK} = 30 MHz or f_{PCLK} = 60 MHz, oversampling by 16[1][2]

Oversampling by 16 (OVER8=0)							
Baud rate		f_{PCLK} = 30 MHz			f_{PCLK} = 60 MHz		
S.No	Desired	Actual	Value programmed in the baud rate register	% Error = (Calculated - Desired)B.Rate /Desired B.Rate	Actual	Value programmed in the baud rate register	% Error
1.	2.4 KBps	2.400 KBps	781.2500	0.00%	2.400 KBps	1562.5000	0.00%
2.	9.6 KBps	9.600 KBps	195.3125	0.00%	9.600 KBps	390.6250	0.00%
3.	19.2 KBps	19.194 KBps	97.6875	0.03%	19.200 KBps	195.3125	0.00%
4.	57.6 KBps	57.582KBps	32.5625	0.03%	57.582 KBps	65.1250	0.03%
5.	115.2 KBps	115.385 KBps	16.2500	0.16%	115.163 KBps	32.5625	0.03%
6.	230.4 KBps	230.769 KBps	8.1250	0.16%	230.769KBps	16.2500	0.16%
7.	460.8 KBps	461.538 KBps	4.0625	0.16%	461.538 KBps	8.1250	0.16%
8.	896 KBps	909.091 KBps	2.0625	1.46%	895.522 KBps	4.1875	0.05%

Table 140. Error calculation for programmed baud rates at f_{PCLK} = 30 MHz or f_{PCLK} = 60 MHz, oversampling by 16(1)(2) (continued)

Oversampling by 16 (OVER8=0)							
Baud rate		f_{PCLK} = 30 MHz			f_{PCLK} = 60 MHz		
S.No	Desired	Actual	Value programmed in the baud rate register	% Error = (Calculated - Desired)B.Rate /Desired B.Rate	Actual	Value programmed in the baud rate register	% Error
9.	921.6 KBps	909.091 KBps	2.0625	1.36%	923.077 KBps	4.0625	0.16%
10.	1.792 MBps	1.1764 MBps	1.0625	1.52%	1.8182 MBps	2.0625	1.36%
11.	1.8432 MBps	1.8750 MBps	1.0000	1.73%	1.8182 MBps	2.0625	1.52%
12.	3.584 MBps	NA	NA	NA	3.2594 MBps	1.0625	1.52%
13.	3.6864 MBps	NA	NA	NA	3.7500 MBps	1.0000	1.73%
14.	7.168 MBps	NA	NA	NA	NA	NA	NA
15.	7.3728 MBps	NA	NA	NA	NA	NA	NA

1. The lower the CPU clock the lower the accuracy for a particular baud rate. The upper limit of the achievable baud rate can be fixed with these data.
2. Only USART1 and USART6 are clocked with PCLK2. Other USARTs are clocked with PCLK1. Refer to the device datasheets for the maximum values for PCLK1 and PCLK2.

Table 141. Error calculation for programmed baud rates at f_{PCLK} = 30 MHz or f_{PCLK} = 60 MHz, oversampling by 8(1) (2)

Oversampling by 8 (OVER8=1)							
Baud rate		f_{PCLK} = 30 MHz			f_{PCLK} =60 MHz		
S.No	Desired	Actual	Value programmed in the baud rate register	% Error = (Calculated - Desired)B.Rate /Desired B.Rate	Actual	Value programmed in the baud rate register	% Error
1.	2.4 KBps	2.400 KBps	1562.5000	0.00%	2.400 KBps	3125.0000	0.00%
2.	9.6 KBps	9.600 KBps	390.6250	0.00%	9.600 KBps	781.2500	0.00%
3.	19.2 KBps	19.194 KBps	195.3750	0.03%	19.200 KBps	390.6250	0.00%
4.	57.6 KBps	57.582 KBps	65.1250	0.16%	57.582 KBps	130.2500	0.03%
5.	115.2 KBps	115.385 KBps	32.5000	0.16%	115.163 KBps	65.1250	0.03%
6.	230.4 KBps	230.769 KBps	16.2500	0.16%	230.769 KBps	32.5000	0.16%
7.	460.8 KBps	461.538 KBps	8.1250	0.16%	461.538 KBps	16.2500	0.16%
8.	896 KBps	909.091 KBps	4.1250	1.46%	895.522 KBps	8.3750	0.05%
9.	921.6 KBps	909.091 KBps	4.1250	1.36%	923.077 KBps	8.1250	0.16%
10.	1.792 MBps	1.7647 MBps	2.1250	1.52%	1.8182 MBps	4.1250	1.46%

Table 141. Error calculation for programmed baud rates at f_{PCLK} = 30 MHz or f_{PCLK} = 60 MHz, oversampling by 8(1) (2) (continued)

Oversampling by 8 (OVER8=1)							
Baud rate		f_{PCLK} = 30 MHz			f_{PCLK} =60 MHz		
S.No	Desired	Actual	Value programmed in the baud rate register	% Error = (Calculated - Desired)B.Rate /Desired B.Rate	Actual	Value programmed in the baud rate register	% Error
11.	1.8432 MBps	1.8750 MBps	2.0000	1.73%	1.8182 MBps	4.1250	1.36%
12.	3.584 MBps	3.7500 MBps	1.0000	4.63%	3.5294 MBps	2.1250	1.52%
13.	3.6864 MBps	3.7500 MBps	1.0000	1.73%	3.7500 MBps	2.0000	1.73%
14.	7.168 MBps	NA	NA	NA	7.5000 MBps	1.0000	4.63%
15.	7.3728 MBps	NA	NA	NA	7.5000 MBps	1.0000	1.73%

1. The lower the CPU clock the lower the accuracy for a particular baud rate. The upper limit of the achievable baud rate can be fixed with these data.
2. Only USART1 and USART6 are clocked with PCLK2. Other USARTs are clocked with PCLK1. Refer to the device datasheets for the maximum values for PCLK1 and PCLK2.

Table 142. Error calculation for programmed baud rates at f_{PCLK} = 42 MHz or f_{PCLK} = 84 Hz, oversampling by 16(1)(2)

Oversampling by 16 (OVER8=0)							
Baud rate		f_{PCLK} = 42 MHz			f_{PCLK} = 84 MHz		
S.No	Desired	Actual	Value programmed in the baud rate register	% Error = (Calculated - Desired)B.Rate /Desired B.Rate	Actual	Value programmed in the baud rate register	% Error
1.	1.2 KBps	1.2 KBps	2187.5	0	1.2 KBps	NA	0
2.	2.4 KBps	2.4 KBps	1093.75	0	2.4 KBps	2187.5	0
3.	9.6 KBps	9.6 KBps	273.4375	0	9.6 KBps	546.875	0
4.	19.2 KBps	19.195 KBps	136.75	0.02	19.2 KBps	273.4375	0
5.	38.4 KBps	38.391 KBps	68.375	0.02	38.391 KBps	136.75	0.02
6.	57.6 KBps	57.613 KBps	45.5625	0.02	57.613 KBps	91.125	0.02
7.	115.2 KBps	115.068 KBps	22.8125	0.11	115.226 KBps	45.5625	0.02
8.	230.4 KBps	230.769 KBps	11.375	0.16	230.137 KBps	22.8125	0.11
9.	460.8 KBps	461.538 KBps	5.6875	0.16	461.538 KBps	11.375	0.16
10.	921.6 KBps	913.043 KBps	2.875	0.93	923.076 KBps	5.6875	0.93
11.	1.792 MBps	1.826 MBps	1.4375	1.9	1.787 MBps	2.9375	0.27
12.	1.8432 MBps	1.826 MBps	1.4375	0.93	1.826 MBps	2.875	0.93
13.	3.584 MBps	N.A	N.A	N.A	3.652 MBps	1.4375	1.9
14.	3.6864 MBps	N.A	N.A	N.A	3.652 MBps	1.4375	0.93

Table 142. Error calculation for programmed baud rates at f_{PCLK} = 42 MHz or f_{PCLK} = 84 Hz, oversampling by 16(1)(2) (continued)

Oversampling by 16 (OVER8=0)							
Baud rate		f_{PCLK} = 42 MHz			f_{PCLK} = 84 MHz		
S.No	Desired	Actual	Value programmed in the baud rate register	% Error = (Calculated - Desired)B.Rate /Desired B.Rate	Actual	Value programmed in the baud rate register	% Error
15.	7.168 MBps	N.A	N.A	N.A	N.A	N.A	N.A
16.	7.3728 MBps	N.A	N.A	N.A	N.A	N.A	N.A
17.	9 MBps	N.A	N.A	N.A	N.A	N.A	N.A
18.	10.5 MBps	N.A	N.A	N.A	N.A	N.A	N.A

1. The lower the CPU clock the lower the accuracy for a particular baud rate. The upper limit of the achievable baud rate can be fixed with these data.
2. Only USART1 and USART6 are clocked with PCLK2. Other USARTs are clocked with PCLK1. Refer to the device datasheets for the maximum values for PCLK1 and PCLK2.

Table 143. Error calculation for programmed baud rates at f_{PCLK} = 42 MHz or f_{PCLK} = 84 MHz, oversampling by 8(1)(2)

Oversampling by 8 (OVER8=1)							
Baud rate		f_{PCLK} = 42 MHz			f_{PCLK} = 84 MHz		
S.No	Desired	Actual	Value programmed in the baud rate register	Value programmed in the baud rate register	Actual	Value programmed in the baud rate register	% Error
1.	2.4 KBps	2.4 KBps	2187.5	0	2.4 KBps	NA	0
2.	9.6 KBps	9.6 KBps	546.875	0	9.6 KBps	1093.75	0
3.	19.2 KBps	19.195 KBps	273.5	0.02	19.2 KBps	546.875	0
4.	38.4 KBps	38.391 KBps	136.75	0.02	38.391 KBps	273.5	0.02
5.	57.6 KBps	57.613 KBps	91.125	0.02	57.613 KBps	182.25	0.02
6.	115.2 KBps	115.068 KBps	45.625	0.11	115.226 KBps	91.125	0.02
7.	230.4 KBps	230.769 KBps	22.75	0.11	230.137 KBps	45.625	0.11
8.	460.8 KBps	461.538 KBps	11.375	0.16	461.538 KBps	22.75	0.16
9.	921.6 KBps	913.043 KBps	5.75	0.93	923.076 KBps	11.375	0.93
10.	1.792 MBps	1.826 MBps	2.875	1.9	1.787Mbps	5.875	0.27
11.	1.8432 MBps	1.826 MBps	2.875	0.93	1.826 MBps	5.75	0.93
12.	3.584 MBps	3.5 MBps	1.5	2.34	3.652 MBps	2.875	1.9
13.	3.6864 MBps	3.82 MBps	1.375	3.57	3.652 MBps	2.875	0.93
14.	7.168 MBps	N.A	N.A	N.A	7 MBps	1.5	2.34
15.	7.3728 MBps	N.A	N.A	N.A	7.636 MBps	1.375	3.57

Table 143. Error calculation for programmed baud rates at f_{PCLK} = 42 MHz or f_{PCLK} = 84 MHz, oversampling by 8(1)(2) (continued)

Oversampling by 8 (OVER8=1)							
Baud rate		f_{PCLK} = 42 MHz			f_{PCLK} = 84 MHz		
S.No	Desired	Actual	Value programmed in the baud rate register	Value programmed in the baud rate register	Actual	Value programmed in the baud rate register	% Error
16.	9 MBps	N.A	N.A	N.A	9.333 MBps	1.125	3.7
17.	10.5 MBps	N.A	N.A	N.A	10.5 MBps	1	0

1. The lower the CPU clock the lower the accuracy for a particular baud rate. The upper limit of the achievable baud rate can be fixed with these data.
2. Only USART1 and USART6 are clocked with PCLK2. Other USARTs are clocked with PCLK1. Refer to the device datasheets for the maximum values for PCLK1 and PCLK2.

30.3.5 USART receiver tolerance to clock deviation

The USART asynchronous receiver works correctly only if the total clock system deviation is smaller than the USART receiver's tolerance. The causes which contribute to the total deviation are:

- DTRA: Deviation due to the transmitter error (which also includes the deviation of the transmitter's local oscillator)
- DQUANT: Error due to the baud rate quantization of the receiver
- DREC: Deviation of the receiver's local oscillator
- DTCL: Deviation due to the transmission line (generally due to the transceivers which can introduce an asymmetry between the low-to-high transition timing and the high-to-low transition timing)

DTRA + DQUANT + DREC + DTCL < USART receiver's tolerance

The USART receiver's tolerance to properly receive data is equal to the maximum tolerated deviation and depends on the following choices:

- 10- or 11-bit character length defined by the M bit in the USART_CR1 register
- oversampling by 8 or 16 defined by the OVER8 bit in the USART_CR1 register
- use of fractional baud rate or not
- use of 1 bit or 3 bits to sample the data, depending on the value of the ONEBIT bit in the USART_CR3 register

Table 144. USART receiver's tolerance when DIV fraction is 0

M bit	OVER8 bit = 0		OVER8 bit = 1	
	ONEBIT=0	ONEBIT=1	ONEBIT=0	ONEBIT=1
0	3.75%	4.375%	2.50%	3.75%
1	3.41%	3.97%	2.27%	3.41%

Table 145. USART receiver tolerance when DIV_Fraction is different from 0

M bit	OVER8 bit = 0		OVER8 bit = 1	
	ONEBIT=0	ONEBIT=1	ONEBIT=0	ONEBIT=1
0	3.33%	3.88%	2%	3%
1	3.03%	3.53%	1.82%	2.73%

Note: The figures specified in Table 144 and Table 145 may slightly differ in the special case when the received frames contain some Idle frames of exactly 10-bit times when M=0 (11-bit times when M=1).

30.3.6 Multiprocessor communication

There is a possibility of performing multiprocessor communication with the USART (several USARTs connected in a network). For instance one of the USARTs can be the master, its TX output is connected to the RX input of the other USART. The others are slaves, their respective TX outputs are logically ANDed together and connected to the RX input of the master.

In multiprocessor configurations it is often desirable that only the intended message recipient should actively receive the full message contents, thus reducing redundant USART service overhead for all non addressed receivers.

The non addressed devices may be placed in mute mode by means of the muting function. In mute mode:

- None of the reception status bits can be set.
- All the receive interrupts are inhibited.
- The RWU bit in USART_CR1 register is set to 1. RWU can be controlled automatically by hardware or written by the software under certain conditions.

The USART can enter or exit from mute mode using one of two methods, depending on the WAKE bit in the USART_CR1 register:

- Idle Line detection if the WAKE bit is reset,
- Address Mark detection if the WAKE bit is set.

Idle line detection (WAKE=0)

The USART enters mute mode when the RWU bit is written to 1.

It wakes up when an Idle frame is detected. Then the RWU bit is cleared by hardware but the IDLE bit is not set in the USART_SR register. RWU can also be written to 0 by software.

An example of mute mode behavior using Idle line detection is given in *Figure 303*.

Figure 303. Mute mode using Idle line detection

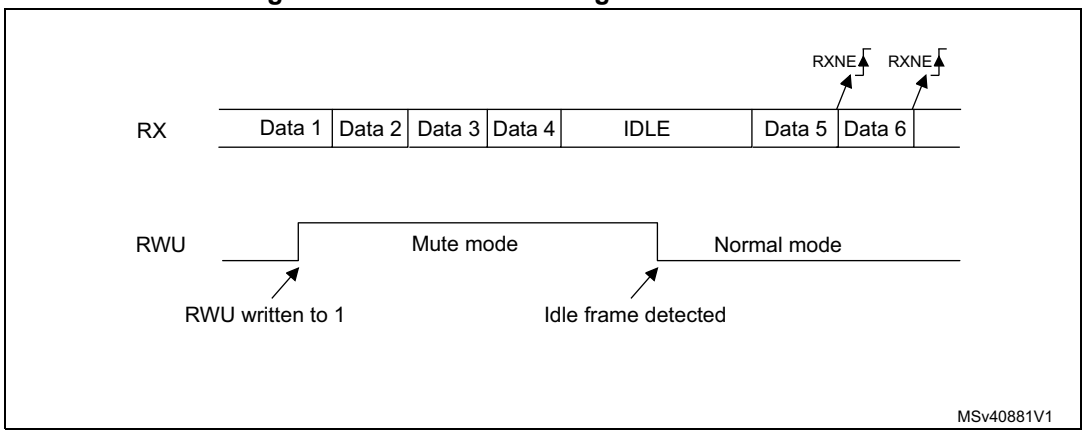

Address mark detection (WAKE=1)

In this mode, bytes are recognized as addresses if their MSB is a ‘1 else they are considered as data. In an address byte, the address of the targeted receiver is put on the 4 LSB. This 4-bit word is compared by the receiver with its own address which is programmed in the ADD bits in the USART_CR2 register.

The USART enters mute mode when an address character is received which does not match its programmed address. In this case, the RWU bit is set by hardware. The RXNE flag is not set for this address byte and no interrupt nor DMA request is issued as the USART would have entered mute mode.

It exits from mute mode when an address character is received which matches the programmed address. Then the RWU bit is cleared and subsequent bytes are received normally. The RXNE bit is set for the address character since the RWU bit has been cleared.

The RWU bit can be written to as 0 or 1 when the receiver buffer contains no data (RXNE=0 in the USART_SR register). Otherwise the write attempt is ignored.

An example of mute mode behavior using address mark detection is given in *Figure 304*.

Figure 304. Mute mode using address mark detection

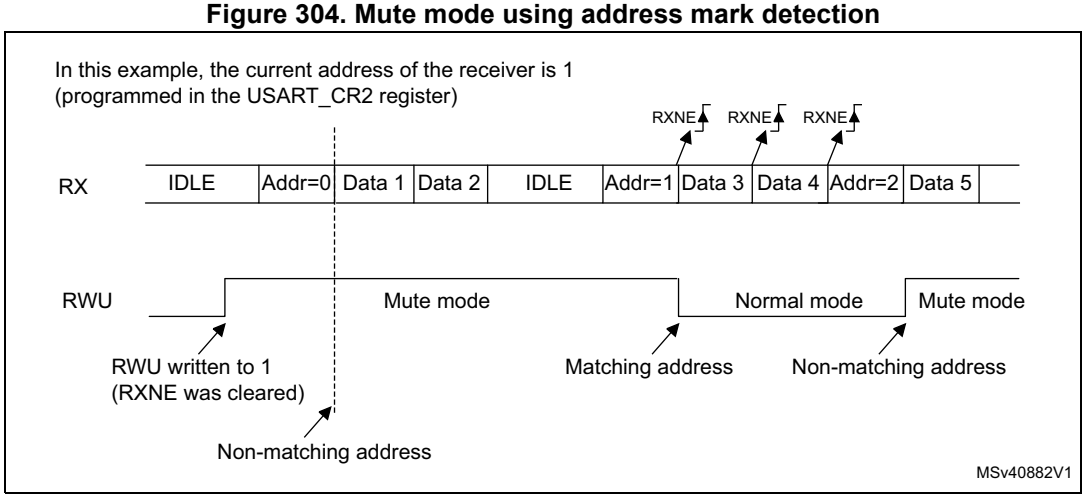

30.3.7 Parity control

Parity control (generation of parity bit in transmission and parity checking in reception) can be enabled by setting the PCE bit in the USART_CR1 register. Depending on the frame length defined by the M bit, the possible USART frame formats are as listed in *Table 146*.

Table 146. Frame formats

M bit	PCE bit	USART frame(1)
0	0	| SB | 8 bit data | STB |
0	1	| SB | 7-bit data | PB | STB |
1	0	| SB | 9-bit data | STB |
1	1	| SB | 8-bit data PB | STB |

1. Legends: SB: start bit, STB: stop bit, PB: parity bit.

Even parity

The parity bit is calculated to obtain an even number of “1s” inside the frame made of the 7 or 8 LSB bits (depending on whether M is equal to 0 or 1) and the parity bit.

E.g.: data=00110101; 4 bits set => parity bit will be 0 if even parity is selected (PS bit in USART_CR1 = 0).

Odd parity

The parity bit is calculated to obtain an odd number of “1s” inside the frame made of the 7 or 8 LSB bits (depending on whether M is equal to 0 or 1) and the parity bit.

E.g.: data=00110101; 4 bits set => parity bit will be 1 if odd parity is selected (PS bit in USART_CR1 = 1).

Parity checking in reception

If the parity check fails, the PE flag is set in the USART_SR register and an interrupt is generated if PEIE is set in the USART_CR1 register. The PE flag is cleared by a software sequence (a read from the status register followed by a read or write access to the USART_DR data register).

Note: In case of wakeup by an address mark: the MSB bit of the data is taken into account to identify an address but not the parity bit. And the receiver does not check the parity of the address data (PE is not set in case of a parity error).

Parity generation in transmission

If the PCE bit is set in USART_CR1, then the MSB bit of the data written in the data register is transmitted but is changed by the parity bit (even number of “1s” if even parity is selected (PS=0) or an odd number of “1s” if odd parity is selected (PS=1)).

Note: The software routine that manages the transmission can activate the software sequence which clears the PE flag (a read from the status register followed by a read or write access to the data register). When operating in half-duplex mode, depending on the software, this can cause the PE flag to be unexpectedly cleared.

30.3.8 LIN (local interconnection network) mode

The LIN mode is selected by setting the LINEN bit in the USART_CR2 register. In LIN mode, the following bits must be kept cleared:

- STOP[1:0] and CLKEN in the USART_CR2 register
- SCEN, HDSEL and IREN in the USART_CR3 register.

LIN transmission

The same procedure explained in *Section 30.3.2* has to be applied for LIN Master transmission than for normal USART transmission with the following differences:

- Clear the M bit to configure 8-bit word length.
- Set the LINEN bit to enter LIN mode. In this case, setting the SBK bit sends 13 ‘0 bits as a break character. Then a bit of value ‘1 is sent to allow the next start detection.

LIN reception

A break detection circuit is implemented on the USART interface. The detection is totally independent from the normal USART receiver. A break can be detected whenever it occurs, during Idle state or during a frame.

When the receiver is enabled (RE=1 in USART_CR1), the circuit looks at the RX input for a start signal. The method for detecting start bits is the same when searching break characters or data. After a start bit has been detected, the circuit samples the next bits exactly like for the data (on the 8th, 9th and 10th samples). If 10 (when the LBDL = 0 in USART_CR2) or 11 (when LBDL=1 in USART_CR2) consecutive bits are detected as ‘0, and are followed by a delimiter character, the LBD flag is set in USART_SR. If the LBDIE bit=1, an interrupt is generated. Before validating the break, the delimiter is checked for as it signifies that the RX line has returned to a high level.

If a ‘1 is sampled before the 10 or 11 have occurred, the break detection circuit cancels the current detection and searches for a start bit again.

If the LIN mode is disabled (LINEN=0), the receiver continues working as normal USART, without taking into account the break detection.

If the LIN mode is enabled (LINEN=1), as soon as a framing error occurs (i.e. stop bit detected at ‘0, which will be the case for any break frame), the receiver stops until the break detection circuit receives either a ‘1, if the break word was not complete, or a delimiter character if a break has been detected.

The behavior of the break detector state machine and the break flag is shown on the *Figure 305: Break detection in LIN mode (11-bit break length - LBDL bit is set) on page 993*.

Examples of break frames are given on *Figure 306: Break detection in LIN mode vs. Framing error detection on page 994*.

Figure 305. Break detection in LIN mode (11-bit break length - LBDL bit is set)

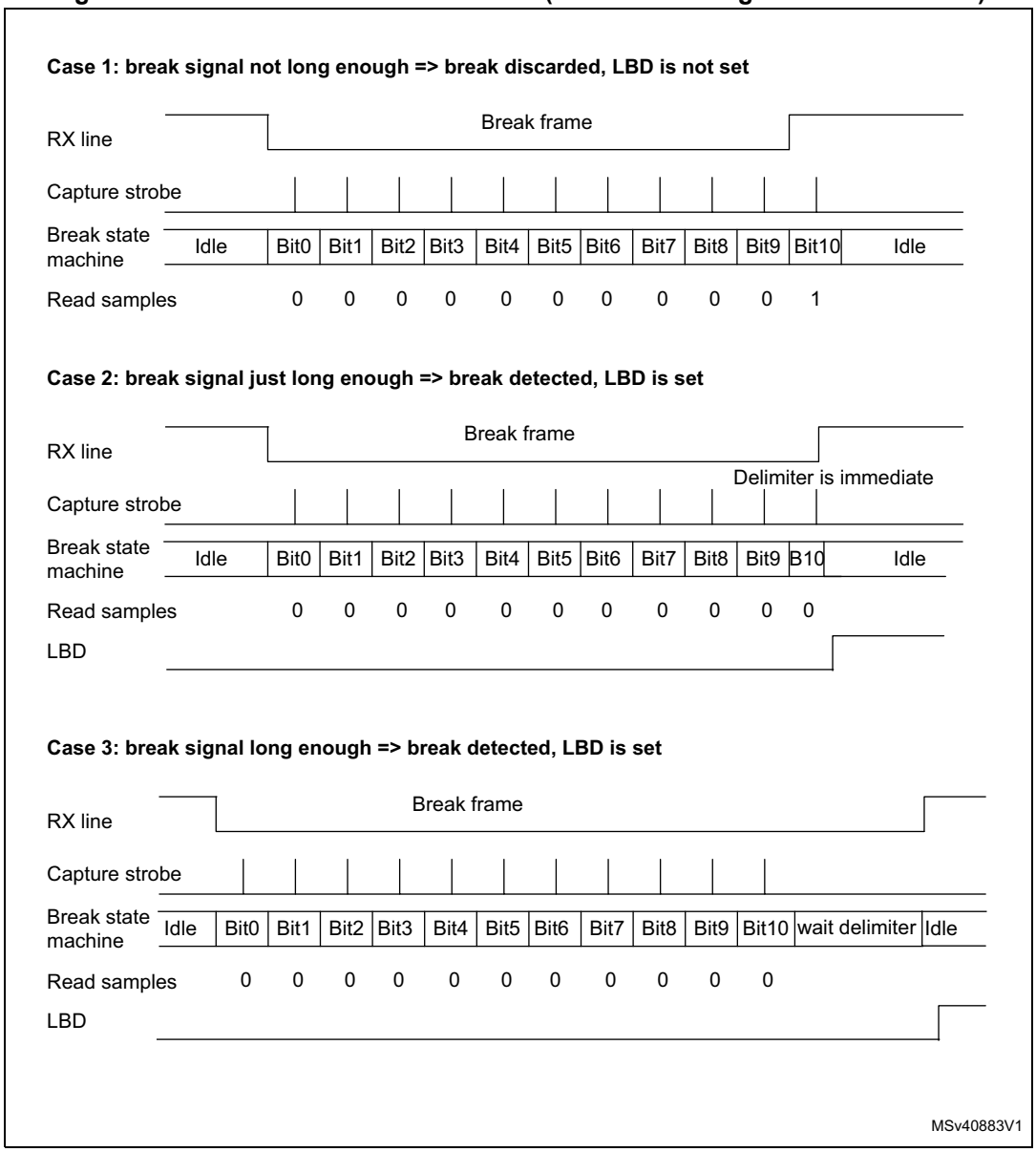

Figure 306. Break detection in LIN mode vs. Framing error detection

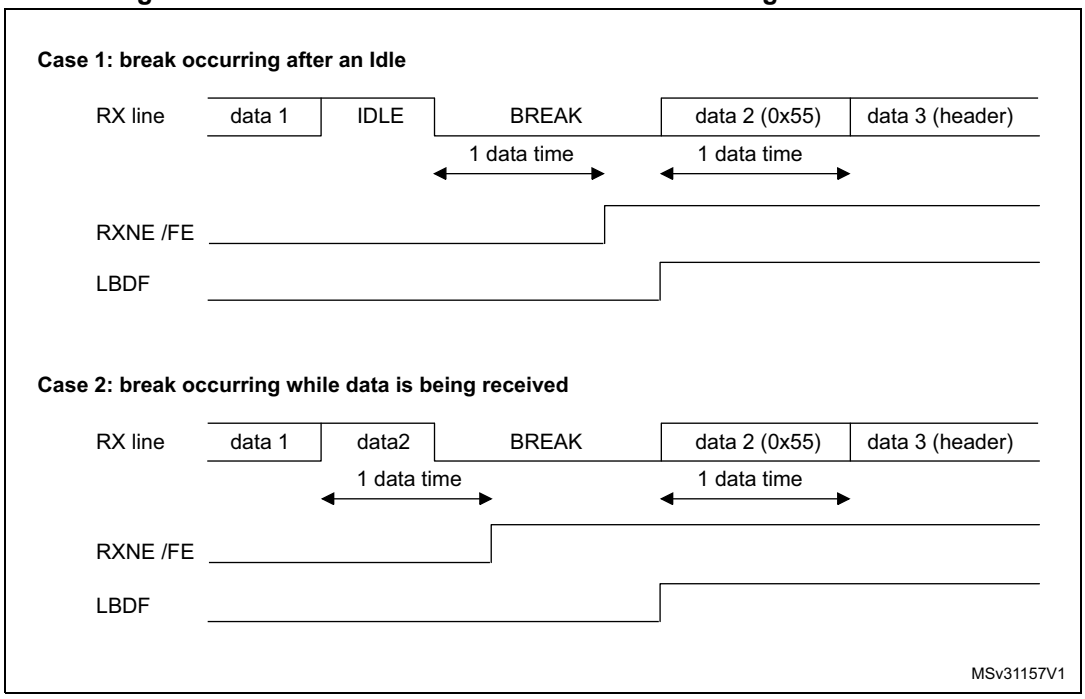

30.3.9 USART synchronous mode

The synchronous mode is selected by writing the CLKEN bit in the USART_CR2 register to 1. In synchronous mode, the following bits must be kept cleared:

- LINEN bit in the USART_CR2 register,
- SCEN, HDSEL and IREN bits in the USART_CR3 register.

The USART allows the user to control a bidirectional synchronous serial communications in master mode. The CK pin is the output of the USART transmitter clock. No clock pulses are sent to the CK pin during start bit and stop bit. Depending on the state of the LBCL bit in the USART_CR2 register clock pulses will or will not be generated during the last valid data bit (address mark). The CPOL bit in the USART_CR2 register allows the user to select the clock polarity, and the CPHA bit in the USART_CR2 register allows the user to select the phase of the external clock (see *Figure 307*, *Figure 308* & *Figure 309*).

During the Idle state, preamble and send break, the external CK clock is not activated.

In synchronous mode the USART transmitter works exactly like in asynchronous mode. But as CK is synchronized with TX (according to CPOL and CPHA), the data on TX is synchronous.

In this mode the USART receiver works in a different manner compared to the asynchronous mode. If RE=1, the data is sampled on CK (rising or falling edge, depending on CPOL and CPHA), without any oversampling. A setup and a hold time must be respected (which depends on the baud rate: 1/16 bit time).

Note: The CK pin works in conjunction with the TX pin. Thus, the clock is provided only if the transmitter is enabled (TE=1) and a data is being transmitted (the data register USART_DR

has been written). This means that it is not possible to receive a synchronous data without transmitting data.

The LBCL, CPOL and CPHA bits have to be selected when both the transmitter and the receiver are disabled (TE=RE=0) to ensure that the clock pulses function correctly. These bits should not be changed while the transmitter or the receiver is enabled.

It is advised that TE and RE are set in the same instruction in order to minimize the setup and the hold time of the receiver.

The USART supports master mode only: it cannot receive or send data related to an input clock (CK is always an output).

Figure 307. USART example of synchronous transmission

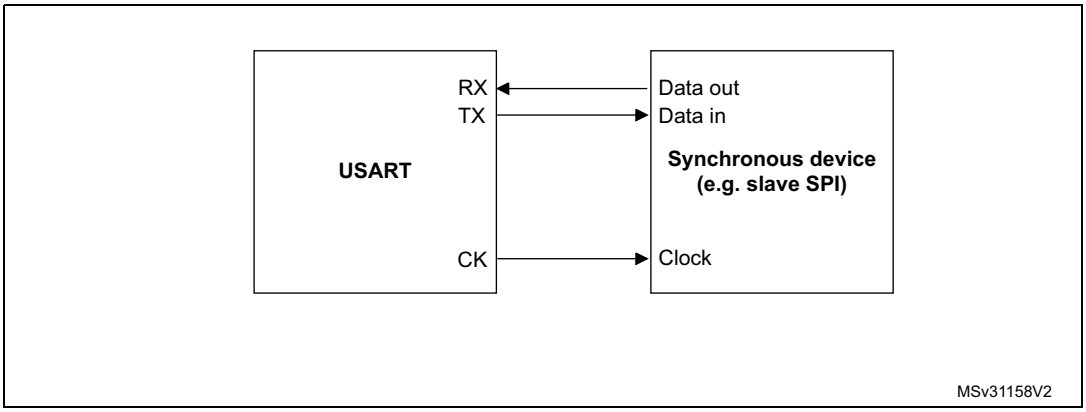

Figure 308. USART data clock timing diagram (M=0)

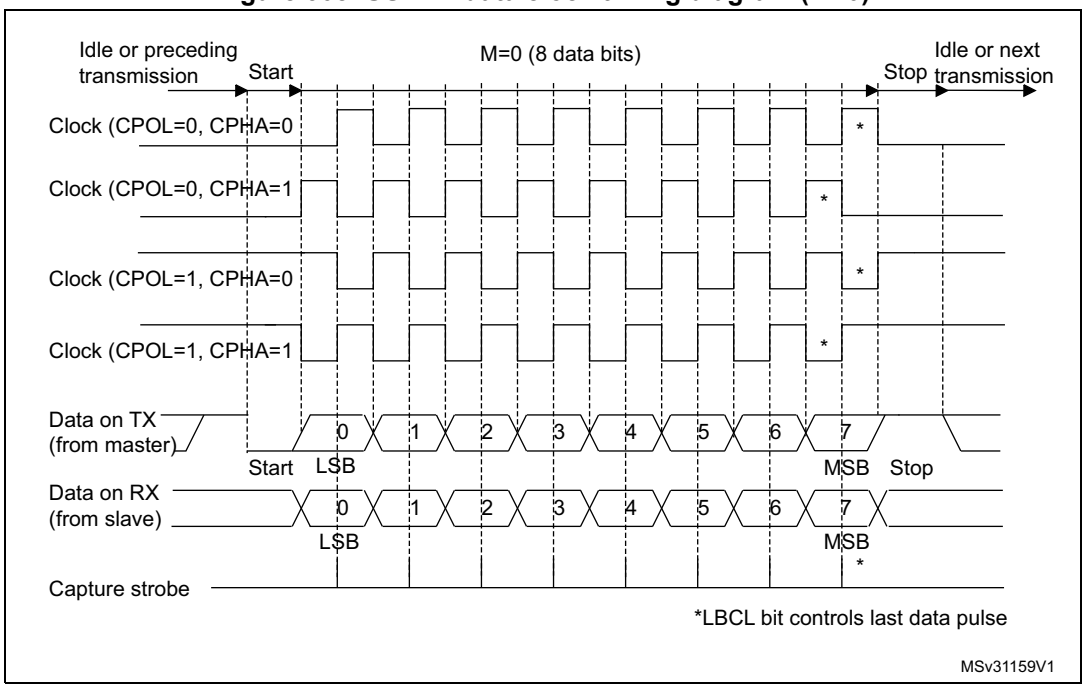

Figure 309. USART data clock timing diagram (M=1)

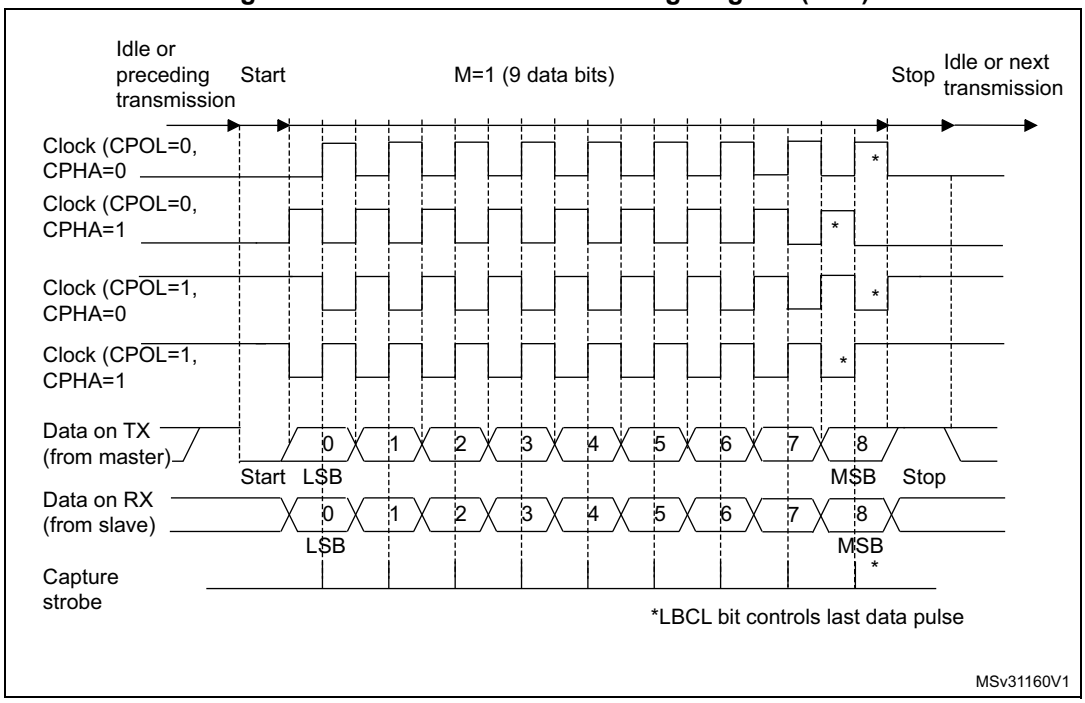

Figure 310. RX data setup/hold time

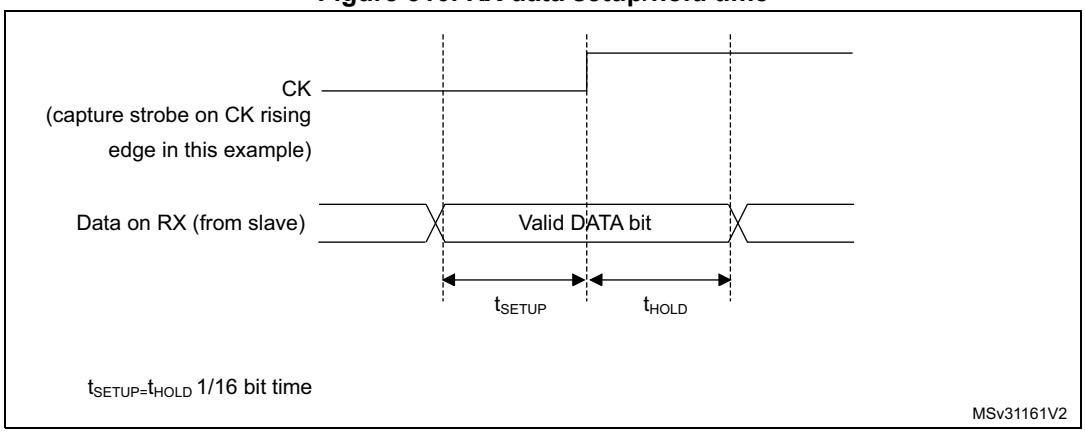

Note: The function of CK is different in Smartcard mode. Refer to the Smartcard mode chapter for more details.

30.3.10 Single-wire half-duplex communication

The single-wire half-duplex mode is selected by setting the HDSEL bit in the USART_CR3 register. In this mode, the following bits must be kept cleared:

- LINEN and CLKEN bits in the USART_CR2 register,
- SCEN and IREN bits in the USART_CR3 register.

The USART can be configured to follow a single-wire half-duplex protocol where the TX and RX lines are internally connected. The selection between half- and full-duplex communication is made with a control bit ‘HALF DUPLEX SEL’ (HDSEL in USART_CR3).

As soon as HDSEL is written to 1:

- the TX and RX lines are internally connected
- the RX pin is no longer used
- the TX pin is always released when no data is transmitted. Thus, it acts as a standard I/O in idle or in reception. It means that the I/O must be configured so that TX is configured as floating input (or output high open-drain) when not driven by the USART.

Apart from this, the communications are similar to what is done in normal USART mode. The conflicts on the line must be managed by the software (by the use of a centralized arbiter, for instance). In particular, the transmission is never blocked by hardware and continue to occur as soon as a data is written in the data register while the TE bit is set.

30.3.11 Smartcard

The Smartcard mode is selected by setting the SCEN bit in the USART_CR3 register. In smartcard mode, the following bits must be kept cleared:

- LINEN bit in the USART_CR2 register,
- HDSEL and IREN bits in the USART_CR3 register.

Moreover, the CLKEN bit may be set in order to provide a clock to the smartcard.

The Smartcard interface is designed to support asynchronous protocol Smartcards as defined in the ISO 7816-3 standard. The USART should be configured as:

- 8 bits plus parity: where M=1 and PCE=1 in the USART_CR1 register
- 1.5 stop bits when transmitting and receiving: where STOP=11 in the USART_CR2 register.

Note: It is also possible to choose 0.5 stop bit for receiving but it is recommended to use 1.5 stop bits for both transmitting and receiving to avoid switching between the two configurations.

Figure 311 shows examples of what can be seen on the data line with and without parity error.

Figure 311. ISO 7816-3 asynchronous protocol

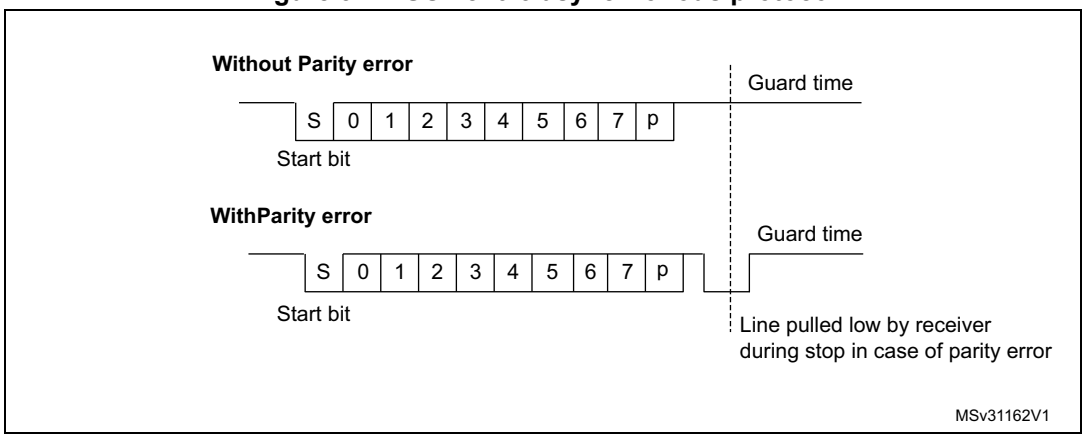

When connected to a Smartcard, the TX output of the USART drives a bidirectional line that is also driven by the Smartcard. The TX pin must be configured as open-drain.

Smartcard is a single wire half duplex communication protocol.

- Transmission of data from the transmit shift register is guaranteed to be delayed by a minimum of 1/2 baud clock. In normal operation a full transmit shift register will start

shifting on the next baud clock edge. In Smartcard mode this transmission is further delayed by a guaranteed 1/2 baud clock.

- If a parity error is detected during reception of a frame programmed with a 0.5 or 1.5 stop bit period, the transmit line is pulled low for a baud clock period after the completion of the receive frame. This is to indicate to the Smartcard that the data transmitted to USART has not been correctly received. This NACK signal (pulling transmit line low for 1 baud clock) will cause a framing error on the transmitter side (configured with 1.5 stop bits). The application can handle re-sending of data according to the protocol. A parity error is 'NACK'ed by the receiver if the NACK control bit is set, otherwise a NACK is not transmitted.
- The assertion of the TC flag can be delayed by programming the Guard Time register. In normal operation, TC is asserted when the transmit shift register is empty and no further transmit requests are outstanding. In Smartcard mode an empty transmit shift register triggers the guard time counter to count up to the programmed value in the Guard Time register. TC is forced low during this time. When the guard time counter reaches the programmed value TC is asserted high.
- The de-assertion of TC flag is unaffected by Smartcard mode.
- If a framing error is detected on the transmitter end (due to a NACK from the receiver), the NACK will not be detected as a start bit by the receive block of the transmitter. According to the ISO protocol, the duration of the received NACK can be 1 or 2 baud clock periods.
- On the receiver side, if a parity error is detected and a NACK is transmitted the receiver will not detect the NACK as a start bit.

Note: A break character is not significant in Smartcard mode. A 0x00 data with a framing error will be treated as data and not as a break.

No Idle frame is transmitted when toggling the TE bit. The Idle frame (as defined for the other configurations) is not defined by the ISO protocol.

Figure 312 details how the NACK signal is sampled by the USART. In this example the USART is transmitting a data and is configured with 1.5 stop bits. The receiver part of the USART is enabled in order to check the integrity of the data and the NACK signal.

Figure 312. Parity error detection using the 1.5 stop bits

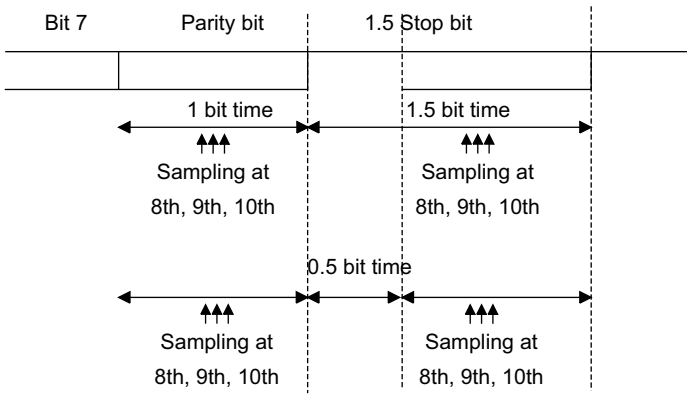

The USART can provide a clock to the smartcard through the CK output. In smartcard mode, CK is not associated to the communication but is simply derived from the internal peripheral input clock through a 5-bit prescaler. The division ratio is configured in the

prescaler register USART_GTPR. CK frequency can be programmed from $f_{CK}/2$ to $f_{CK}/62$, where f_{CK} is the peripheral input clock.

30.3.12 IrDA SIR ENDEC block

The IrDA mode is selected by setting the IREN bit in the USART_CR3 register. In IrDA mode, the following bits must be kept cleared:

- LINEN, STOP and CLKEN bits in the USART_CR2 register,
- SCEN and HDSEL bits in the USART_CR3 register.

The IrDA SIR physical layer specifies use of a Return to Zero, Inverted (RZI) modulation scheme that represents logic 0 as an infrared light pulse (see *Figure 313*).

The SIR Transmit encoder modulates the Non Return to Zero (NRZ) transmit bit stream output from USART. The output pulse stream is transmitted to an external output driver and infrared LED. USART supports only bit rates up to 115.2Kbps for the SIR ENDEC. In normal mode the transmitted pulse width is specified as 3/16 of a bit period.

The SIR receive decoder demodulates the return-to-zero bit stream from the infrared detector and outputs the received NRZ serial bit stream to USART. The decoder input is normally HIGH (marking state) in the Idle state. The transmit encoder output has the opposite polarity to the decoder input. A start bit is detected when the decoder input is low.

- IrDA is a half duplex communication protocol. If the Transmitter is busy (i.e. the USART is sending data to the IrDA encoder), any data on the IrDA receive line will be ignored by the IrDA decoder and if the Receiver is busy (USART is receiving decoded data from the USART), data on the TX from the USART to IrDA will not be encoded by IrDA. While receiving data, transmission should be avoided as the data to be transmitted could be corrupted.
- A ‘0 is transmitted as a high pulse and a ‘1 is transmitted as a ‘0. The width of the pulse is specified as 3/16th of the selected bit period in normal mode (see *Figure 314*).
- The SIR decoder converts the IrDA compliant receive signal into a bit stream for USART.
- The SIR receive logic interprets a high state as a logic one and low pulses as logic zeros.
- The transmit encoder output has the opposite polarity to the decoder input. The SIR output is in low state when Idle.
- The IrDA specification requires the acceptance of pulses greater than 1.41 us. The acceptable pulse width is programmable. Glitch detection logic on the receiver end filters out pulses of width less than 2 PSC periods (PSC is the prescaler value programmed in the IrDA low-power Baud Register, USART_GTPR). Pulses of width less than 1 PSC period are always rejected, but those of width greater than one and less than two periods may be accepted or rejected, those greater than 2 periods will be accepted as a pulse. The IrDA encoder/decoder doesn’t work when PSC=0.
- The receiver can communicate with a low-power transmitter.
- In IrDA mode, the STOP bits in the USART_CR2 register must be configured to “1 stop bit”.

IrDA low-power mode

Transmitter:

In low-power mode the pulse width is not maintained at 3/16 of the bit period. Instead, the width of the pulse is 3 times the low-power baud rate which can be a minimum of 1.42 MHz. Generally this value is 1.8432 MHz (1.42 MHz < PSC< 2.12 MHz). A low-power mode programmable divisor divides the system clock to achieve this value.

Receiver:

Receiving in low-power mode is similar to receiving in normal mode. For glitch detection the USART should discard pulses of duration shorter than 1/PSC. A valid low is accepted only if its duration is greater than 2 periods of the IrDA low-power Baud clock (PSC value in USART_GTPR).

Note: A pulse of width less than two and greater than one PSC period(s) may or may not be rejected.

The receiver set up time should be managed by software. The IrDA physical layer specification specifies a minimum of 10 ms delay between transmission and reception (IrDA is a half duplex protocol).

Figure 313. IrDA SIR ENDEC- block diagram

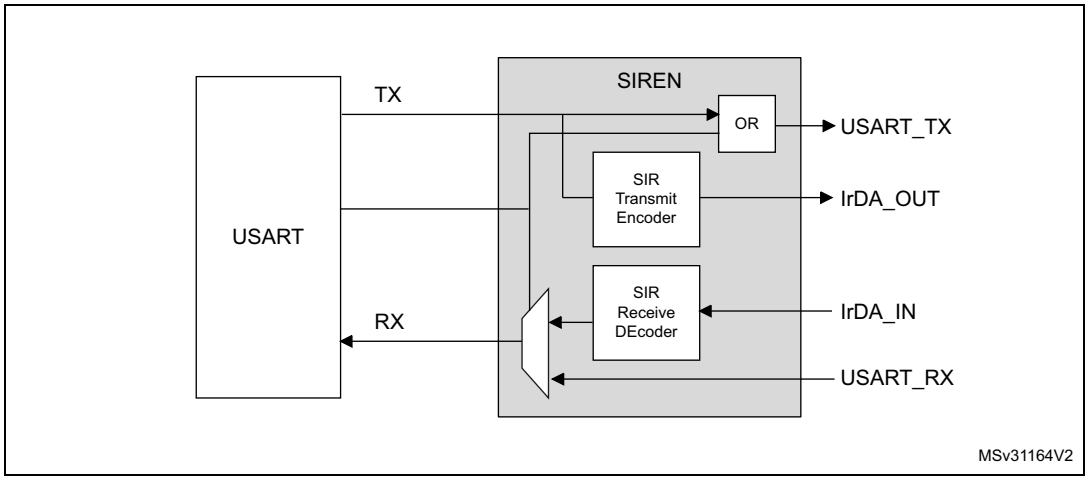

Figure 314. IrDA data modulation (3/16) -Normal mode

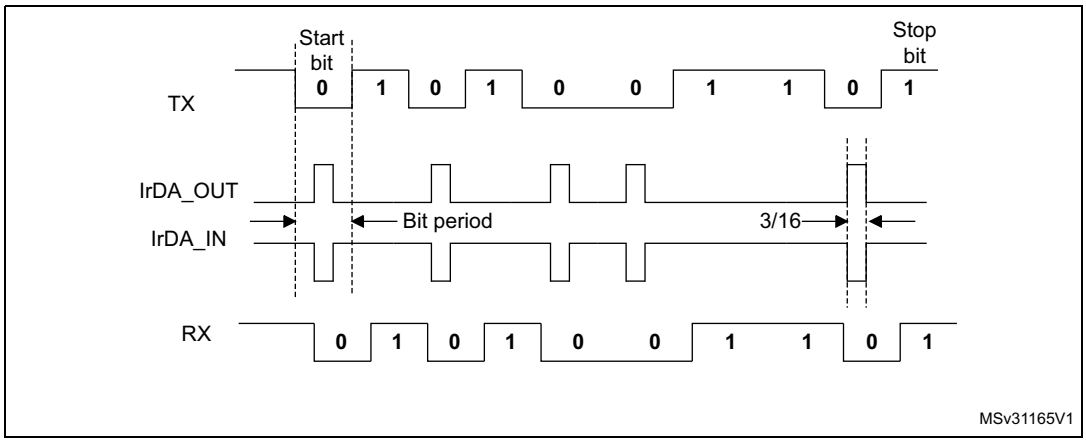

30.3.13 Continuous communication using DMA

The USART is capable of continuous communication using the DMA. The DMA requests for Rx buffer and Tx buffer are generated independently.

Transmission using DMA

DMA mode can be enabled for transmission by setting DMAT bit in the USART_CR3 register. Data is loaded from a SRAM area configured using the DMA peripheral (refer to the DMA specification) to the USART_DR register whenever the TXE bit is set. To map a DMA channel for USART transmission, use the following procedure (x denotes the channel number):

1. Write the USART_DR register address in the DMA control register to configure it as the destination of the transfer. The data will be moved to this address from memory after each TXE event.
2. Write the memory address in the DMA control register to configure it as the source of the transfer. The data will be loaded into the USART_DR register from this memory area after each TXE event.
3. Configure the total number of bytes to be transferred to the DMA control register.
4. Configure the channel priority in the DMA register
5. Configure DMA interrupt generation after half/ full transfer as required by the application.
6. Clear the TC bit in the SR register by writing 0 to it.
7. Activate the channel in the DMA register.

When the number of data transfers programmed in the DMA Controller is reached, the DMA controller generates an interrupt on the DMA channel interrupt vector.

In transmission mode, once the DMA has written all the data to be transmitted (the TCIF flag is set in the DMA_ISR register), the TC flag can be monitored to make sure that the USART communication is complete. This is required to avoid corrupting the last transmission before disabling the USART or entering the Stop mode. The software must wait until TC=1. The TC flag remains cleared during all data transfers and it is set by hardware at the last frame's end of transmission.

Figure 315. Transmission using DMA

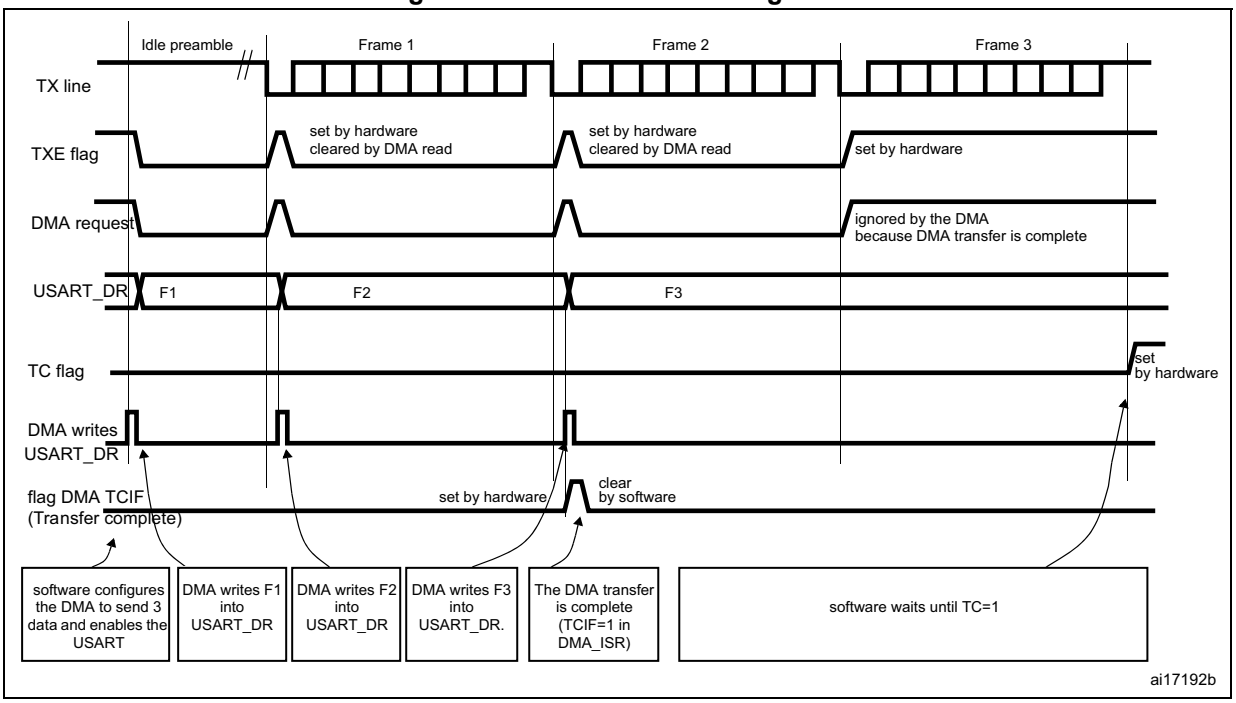

Reception using DMA

DMA mode can be enabled for reception by setting the DMAR bit in USART_CR3 register. Data is loaded from the USART_DR register to a SRAM area configured using the DMA peripheral (refer to the DMA specification) whenever a data byte is received. To map a DMA channel for USART reception, use the following procedure:

1. Write the USART_DR register address in the DMA control register to configure it as the source of the transfer. The data will be moved from this address to the memory after each RXNE event.
2. Write the memory address in the DMA control register to configure it as the destination of the transfer. The data will be loaded from USART_DR to this memory area after each RXNE event.
3. Configure the total number of bytes to be transferred in the DMA control register.
4. Configure the channel priority in the DMA control register
5. Configure interrupt generation after half/ full transfer as required by the application.
6. Activate the channel in the DMA control register.

When the number of data transfers programmed in the DMA Controller is reached, the DMA controller generates an interrupt on the DMA channel interrupt vector. The DMAR bit should be cleared by software in the USART_CR3 register during the interrupt subroutine.

Figure 316. Reception using DMA

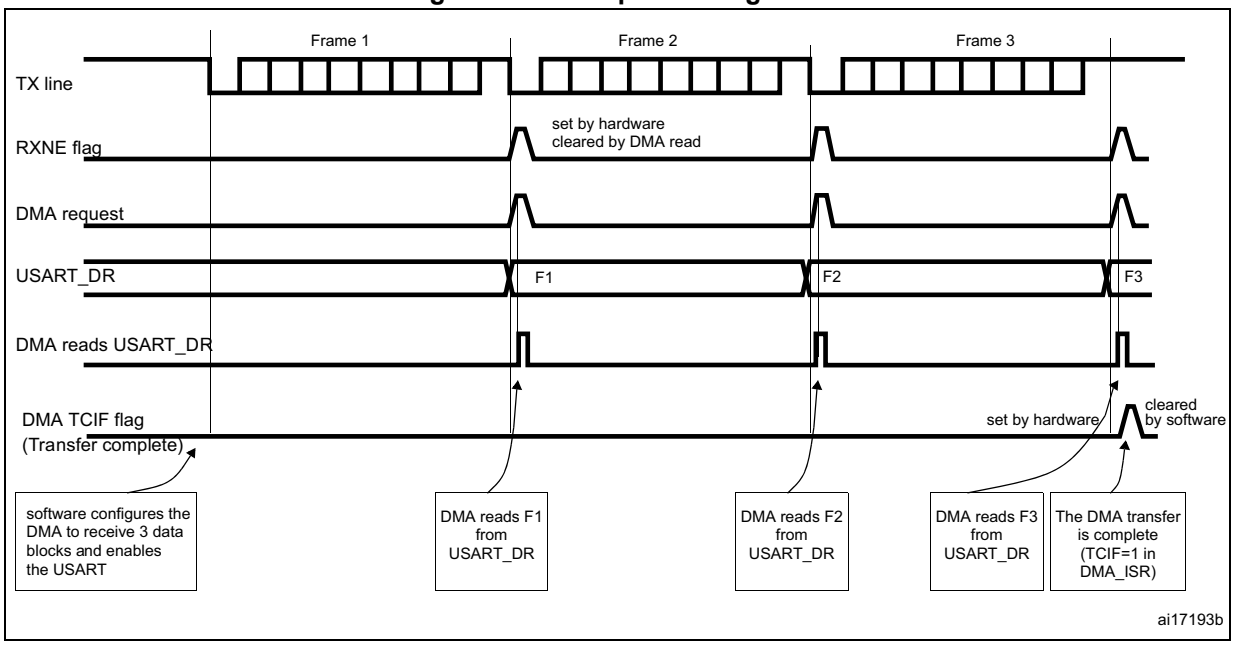

Error flagging and interrupt generation in multibuffer communication

In case of multibuffer communication if any error occurs during the transaction the error flag will be asserted after the current byte. An interrupt will be generated if the interrupt enable flag is set. For framing error, overrun error and noise flag which are asserted with RXNE in case of single byte reception, there will be separate error flag interrupt enable bit (EIE bit in the USART_CR3 register), which if set will issue an interrupt after the current byte with either of these errors.

30.3.14 Hardware flow control

It is possible to control the serial data flow between 2 devices by using the CTS input and the RTS output. The *Figure 317* shows how to connect 2 devices in this mode:

Figure 317. Hardware flow control between 2 USARTs

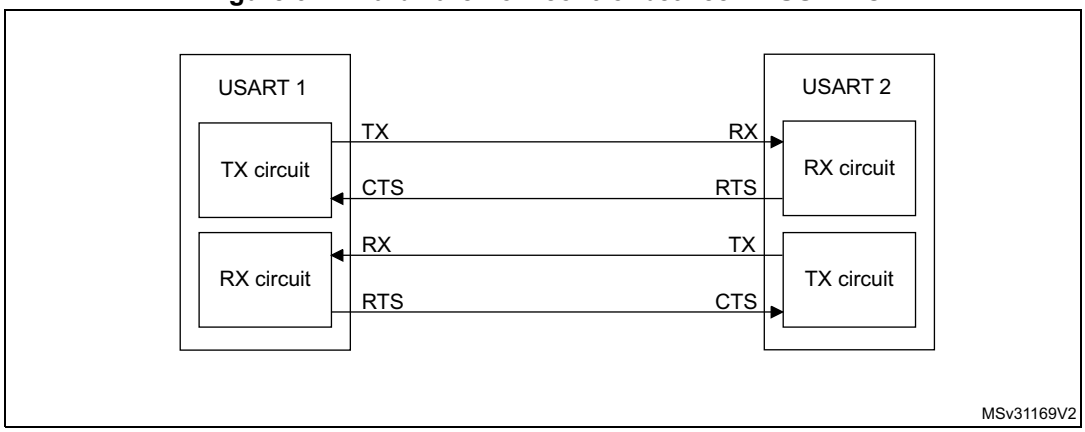

RTS and CTS flow control can be enabled independently by writing respectively RTSE and CTSE bits to 1 (in the USART_CR3 register).

RTS flow control

If the RTS flow control is enabled (RTSE=1), then RTS is asserted (tied low) as long as the USART receiver is ready to receive a new data. When the receive register is full, RTS is deasserted, indicating that the transmission is expected to stop at the end of the current frame. *Figure 318* shows an example of communication with RTS flow control enabled.

Figure 318. RTS flow control

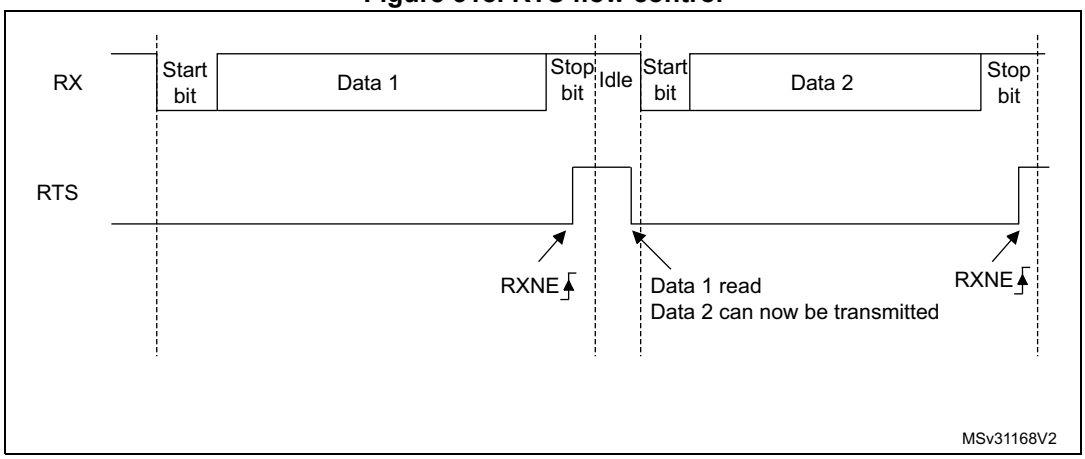

CTS flow control

If the CTS flow control is enabled (CTSE=1), then the transmitter checks the CTS input before transmitting the next frame. If CTS is asserted (tied low), then the next data is transmitted (assuming that a data is to be transmitted, in other words, if TXE=0), else the transmission does not occur. When CTS is deasserted during a transmission, the current transmission is completed before the transmitter stops.

When CTSE=1, the CTSIF status bit is automatically set by hardware as soon as the CTS input toggles. It indicates when the receiver becomes ready or not ready for communication. An interrupt is generated if the CTSIE bit in the USART_CR3 register is set. The figure below shows an example of communication with CTS flow control enabled.

Figure 319. CTS flow control

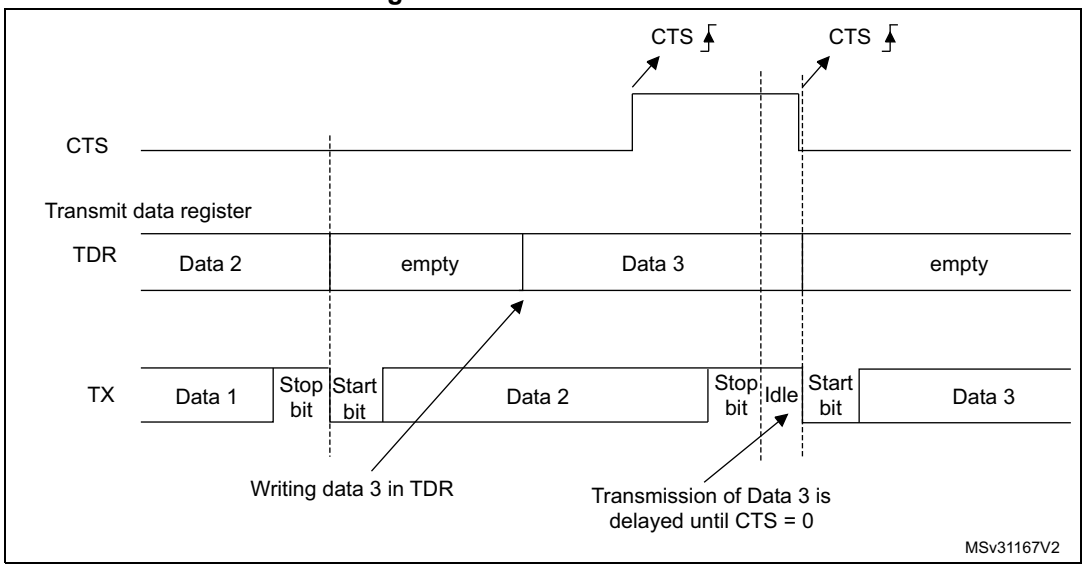

Note: ***Special behavior of break frames:*** *when the CTS flow is enabled, the transmitter does not check the CTS input state to send a break.*

30.4 USART interrupts

Table 147. USART interrupt requests

Interrupt event	Event flag	Enable control bit
Transmit Data Register Empty	TXE	TXEIE
CTS flag	CTS	CTSIE
Transmission Complete	TC	TCIE
Received Data Ready to be Read	RXNE	RXNEIE
Overrun Error Detected	ORE	
Idle Line Detected	IDLE	IDLEIE
Parity Error	PE	PEIE
Break Flag	LBD	LBDIE
Noise Flag, Overrun error and Framing Error in multibuffer communication	NF or ORE or FE	EIE

The USART interrupt events are connected to the same interrupt vector (see *Figure 320*).

- During transmission: Transmission Complete, Clear to Send or Transmit Data Register empty interrupt.
- While receiving: Idle Line detection, Overrun error, Receive Data register not empty, Parity error, LIN break detection, Noise Flag (only in multi buffer communication) and Framing Error (only in multi buffer communication).

These events generate an interrupt if the corresponding Enable Control Bit is set.

Figure 320. USART interrupt mapping diagram

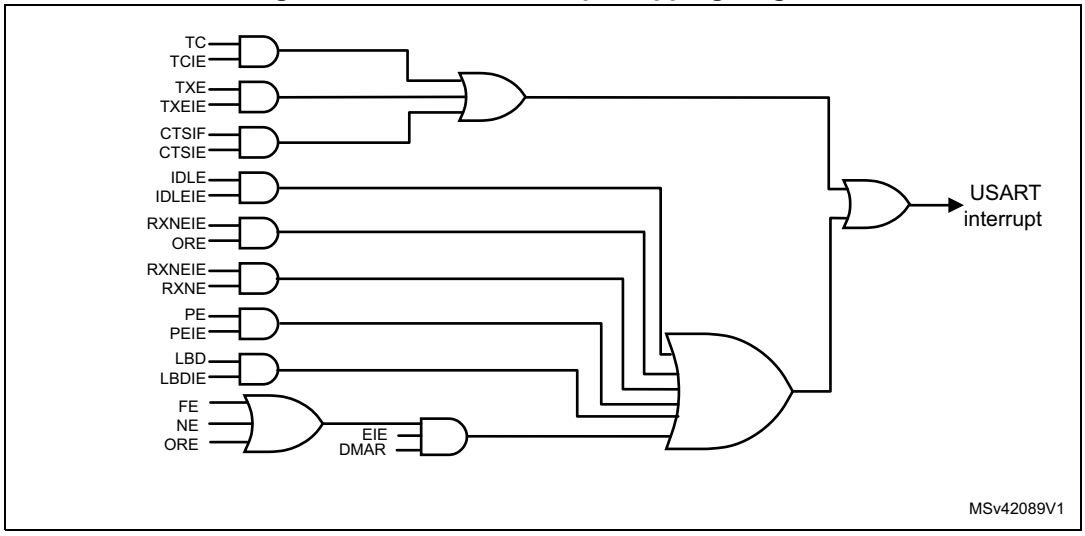

30.5 USART mode configuration

Table 148. USART mode configuration(1)

USART modes	USART 1	USART 2	USART 3	UART4	UART5	USART 6
Asynchronous mode	X	X	X	X	X	X
Hardware flow control	X	X	X	NA	NA	X
Multibuffer communication (DMA)	X	X	X	X	X	X
Multiprocessor communication	X	X	X	X	X	X
Synchronous	X	X	X	NA	NA	X
Smartcard	X	X	X	NA	NA	X
Half-duplex (single-wire mode)	X	X	X	X	X	X
IrDA	X	X	X	X	X	X
LIN	X	X	X	X	X	X

1. X = supported; NA = not applicable.

30.6 USART registers

Refer to *Section 1.1: List of abbreviations for registers for registers* for a list of abbreviations used in register descriptions.

The peripheral registers have to be accessed by half-words (16 bits) or words (32 bits).

30.6.1 Status register (USART_SR)

Address offset: 0x00

Reset value: 0x0000 00C0

31	30	29	28	27	26	25	24	23	22	21	20	19	18	17	16
Reserved															
15	14	13	12	11	10	9	8	7	6	5	4	3	2	1	0
Reserved						CTS	LBD	TXE	TC	RXNE	IDLE	ORE	NF	FE	PE
						rc_w0	rc_w0	r	rc_w0	rc_w0	r	r	r	r	r

Bits 31:10 Reserved, must be kept at reset value

Bit 9 **CTS**: CTS flag

This bit is set by hardware when the CTS input toggles, if the CTSE bit is set. It is cleared by software (by writing it to 0). An interrupt is generated if CTSIE=1 in the USART_CR3 register.

0: No change occurred on the CTS status line

1: A change occurred on the CTS status line

Note: This bit is not available for UART4 & UART5.

Bit 8 **LBD**: LIN break detection flag

This bit is set by hardware when the LIN break is detected. It is cleared by software (by writing it to 0). An interrupt is generated if LBDIE = 1 in the USART_CR2 register.

0: LIN Break not detected

1: LIN break detected

Note: An interrupt is generated when LBD=1 if LBDIE=1

Bit 7 **TXE**: Transmit data register empty

This bit is set by hardware when the content of the TDR register has been transferred into the shift register. An interrupt is generated if the TXEIE bit =1 in the USART_CR1 register. It is cleared by a write to the USART_DR register.

0: Data is not transferred to the shift register

1: Data is transferred to the shift register)

Note: This bit is used during single buffer transmission.

Bit 6 **TC**: Transmission complete

This bit is set by hardware if the transmission of a frame containing data is complete and if TXE is set. An interrupt is generated if TCIE=1 in the USART_CR1 register. It is cleared by a software sequence (a read from the USART_SR register followed by a write to the USART_DR register). The TC bit can also be cleared by writing a '0' to it. This clearing sequence is recommended only for multibuffer communication.

0: Transmission is not complete

1: Transmission is complete

Bit 5 **RXNE**: Read data register not empty

This bit is set by hardware when the content of the RDR shift register has been transferred to the USART_DR register. An interrupt is generated if RXNEIE=1 in the USART_CR1 register. It is cleared by a read to the USART_DR register. The RXNE flag can also be cleared by writing a zero to it. This clearing sequence is recommended only for multibuffer communication.

0: Data is not received

1: Received data is ready to be read.

Bit 4 **IDLE**: IDLE line detected

This bit is set by hardware when an Idle Line is detected. An interrupt is generated if the IDLEIE=1 in the USART_CR1 register. It is cleared by a software sequence (an read to the USART_SR register followed by a read to the USART_DR register).

0: No Idle Line is detected

1: Idle Line is detected

Note: The IDLE bit will not be set again until the RXNE bit has been set itself (i.e. a new idle line occurs).

Bit 3 **ORE**: Overrun error

This bit is set by hardware when the word currently being received in the shift register is ready to be transferred into the RDR register while RXNE=1. An interrupt is generated if RXNEIE=1 in the USART_CR1 register. It is cleared by a software sequence (an read to the USART_SR register followed by a read to the USART_DR register).

0: No Overrun error

1: Overrun error is detected

Note: When this bit is set, the RDR register content will not be lost but the shift register will be overwritten. An interrupt is generated on ORE flag in case of Multi Buffer communication if the EIE bit is set.

Bit 2 **NF**: Noise detected flag

This bit is set by hardware when noise is detected on a received frame. It is cleared by a software sequence (an read to the USART_SR register followed by a read to the USART_DR register).

0: No noise is detected

1: Noise is detected

Note: This bit does not generate interrupt as it appears at the same time as the RXNE bit which itself generates an interrupting interrupt is generated on NF flag in case of Multi Buffer communication if the EIE bit is set.

Note: When the line is noise-free, the NF flag can be disabled by programming the ONEBIT bit to 1 to increase the USART tolerance to deviations (Refer to Section 30.3.5: USART receiver tolerance to clock deviation on page 988).

Bit 1 **FE**: Framing error

This bit is set by hardware when a de-synchronization, excessive noise or a break character is detected. It is cleared by a software sequence (an read to the USART_SR register followed by a read to the USART_DR register).

0: No Framing error is detected

1: Framing error or break character is detected

Note: This bit does not generate interrupt as it appears at the same time as the RXNE bit which itself generates an interrupt. If the word currently being transferred causes both frame error and overrun error, it will be transferred and only the ORE bit will be set.

An interrupt is generated on FE flag in case of Multi Buffer communication if the EIE bit is set.

Bit 0 **PE**: Parity error

This bit is set by hardware when a parity error occurs in receiver mode. It is cleared by a software sequence (a read from the status register followed by a read or write access to the USART_DR data register). The software must wait for the RXNE flag to be set before clearing the PE bit.

An interrupt is generated if PEIE = 1 in the USART_CR1 register.

0: No parity error

1: Parity error

30.6.2 Data register (USART_DR)

Address offset: 0x04

Reset value: 0xXXXX XXXX

Bits 31:9 Reserved, must be kept at reset value

Bits 8:0 **DR[8:0]**: Data value

Contains the Received or Transmitted data character, depending on whether it is read from or written to.

The Data register performs a double function (read and write) since it is composed of two registers, one for transmission (TDR) and one for reception (RDR)

The TDR register provides the parallel interface between the internal bus and the output shift register (see Figure 1).

The RDR register provides the parallel interface between the input shift register and the internal bus.

When transmitting with the parity enabled (PCE bit set to 1 in the USART_CR1 register), the value written in the MSB (bit 7 or bit 8 depending on the data length) has no effect because it is replaced by the parity.

When receiving with the parity enabled, the value read in the MSB bit is the received parity bit.

30.6.3 Baud rate register (USART_BRR)

Note: The baud counters stop counting if the TE or RE bits are disabled respectively.

Address offset: 0x08

Reset value: 0x0000 0000

31	30	29	28	27	26	25	24	23	22	21	20	19	18	17	16
Reserved															
15	14	13	12	11	10	9	8	7	6	5	4	3	2	1	0
DIV_Mantissa[11:0]												DIV_Fraction[3:0]			
rw	rw	rw	rw	rw	rw	rw	rw	rw	rw	rw	rw	rw	rw	rw	rw

Bits 31:16 Reserved, must be kept at reset value

Bits 15:4 **DIV_Mantissa[11:0]**: mantissa of USARTDIV

These 12 bits define the mantissa of the USART Divider (USARTDIV)

Bits 3:0 **DIV_Fraction[3:0]**: fraction of USARTDIV

These 4 bits define the fraction of the USART Divider (USARTDIV). When OVER8=1, the DIV_Fraction3 bit is not considered and must be kept cleared.

30.6.4 Control register 1 (USART_CR1)

Address offset: 0x0C

Reset value: 0x0000 0000

31	30	29	28	27	26	25	24	23	22	21	20	19	18	17	16
Reserved															
15	14	13	12	11	10	9	8	7	6	5	4	3	2	1	0
OVER8	Reserved	UE	M	WAKE	PCE	PS	PEIE	TXEIE	TCIE	RXNEIE	IDLEIE	TE	RE	RWU	SBK
rw	Res.	rw	rw	rw	rw	rw	rw	rw	rw	rw	rw	rw	rw	rw	rw

Bits 31:16 Reserved, must be kept at reset value

Bit 15 **OVER8**: Oversampling mode

0: oversampling by 16
1: oversampling by 8

Note: Oversampling by 8 is not available in the Smartcard, IrDA and LIN modes: when SCEN=1,IREN=1 or LINEN=1 then OVER8 is forced to '0 by hardware.

Bit 14 Reserved, must be kept at reset value

Bit 13 **UE**: USART enable

When this bit is cleared, the USART prescalers and outputs are stopped and the end of the current byte transfer in order to reduce power consumption. This bit is set and cleared by software.

0: USART prescaler and outputs disabled
1: USART enabled

Bit 12 **M**: Word length

This bit determines the word length. It is set or cleared by software.

0: 1 Start bit, 8 Data bits, n Stop bit
1: 1 Start bit, 9 Data bits, n Stop bit

Note: The M bit must not be modified during a data transfer (both transmission and reception)

Bit 11 **WAKE**: Wakeup method

This bit determines the USART wakeup method, it is set or cleared by software.

0: Idle Line
1: Address Mark

Bit 10 **PCE**: Parity control enable

This bit selects the hardware parity control (generation and detection). When the parity control is enabled, the computed parity is inserted at the MSB position (9th bit if M=1; 8th bit if M=0) and parity is checked on the received data. This bit is set and cleared by software. Once it is set, PCE is active after the current byte (in reception and in transmission).

0: Parity control disabled
1: Parity control enabled

Bit 9 **PS**: Parity selection

This bit selects the odd or even parity when the parity generation/detection is enabled (PCE bit set). It is set and cleared by software. The parity will be selected after the current byte.

0: Even parity
1: Odd parity

Bit 8 **PEIE**: PE interrupt enable

This bit is set and cleared by software.

0: Interrupt is inhibited
1: An USART interrupt is generated whenever PE=1 in the USART_SR register

Bit 7 **TXEIE**: TXE interrupt enable

This bit is set and cleared by software.

0: Interrupt is inhibited
1: An USART interrupt is generated whenever TXE=1 in the USART_SR register

Bit 6 **TCIE**: Transmission complete interrupt enable

This bit is set and cleared by software.

0: Interrupt is inhibited
1: An USART interrupt is generated whenever TC=1 in the USART_SR register

Bit 5 **RXNEIE**: RXNE interrupt enable

This bit is set and cleared by software.

0: Interrupt is inhibited

1: An USART interrupt is generated whenever ORE=1 or RXNE=1 in the USART_SR register

Bit 4 **IDLEIE**: IDLE interrupt enable

This bit is set and cleared by software.

0: Interrupt is inhibited

1: An USART interrupt is generated whenever IDLE=1 in the USART_SR register

Bit 3 **TE**: Transmitter enable

This bit enables the transmitter. It is set and cleared by software.

0: Transmitter is disabled

1: Transmitter is enabled

Note: During transmission, a "0" pulse on the TE bit ("0" followed by "1") sends a preamble (idle line) after the current word, except in smartcard mode.

When TE is set, there is a 1 bit-time delay before the transmission starts.

Bit 2 **RE**: Receiver enable

This bit enables the receiver. It is set and cleared by software.

0: Receiver is disabled

1: Receiver is enabled and begins searching for a start bit

Bit 1 **RWU**: Receiver wakeup

This bit determines if the USART is in mute mode or not. It is set and cleared by software and can be cleared by hardware when a wakeup sequence is recognized.

0: Receiver in active mode

1: Receiver in mute mode

Note: Before selecting Mute mode (by setting the RWU bit) the USART must first receive a data byte, otherwise it cannot function in Mute mode with wakeup by Idle line detection.

In Address Mark Detection wakeup configuration (WAKE bit=1) the RWU bit cannot be modified by software while the RXNE bit is set.

Bit 0 **SBK**: Send break

This bit set is used to send break characters. It can be set and cleared by software. It should be set by software, and will be reset by hardware during the stop bit of break.

0: No break character is transmitted

1: Break character will be transmitted

30.6.5 Control register 2 (USART_CR2)

Address offset: 0x10

Reset value: 0x0000 0000

31	30	29	28	27	26	25	24	23	22	21	20	19	18	17	16
Reserved															
15	14	13	12	11	10	9	8	7	6	5	4	3	2	1	0
Res.	LINEN	STOP[1:0]		CLKEN	CPOL	CPHA	LBCL	Res.	LBDIE	LBDL	Res.	ADD[3:0]			
	rw	rw	rw	rw	rw	rw	rw		rw	rw	rw	rw	rw	rw	rw

Bits 31:15 Reserved, must be kept at reset value

Bit 14 **LINEN**: LIN mode enable

This bit is set and cleared by software.

0: LIN mode disabled

1: LIN mode enabled

The LIN mode enables the capability to send LIN Synch Breaks (13 low bits) using the SBK bit in the USART_CR1 register, and to detect LIN Sync breaks.

Bits 13:12 **STOP**: STOP bits

These bits are used for programming the stop bits.

00: 1 Stop bit

01: 0.5 Stop bit

10: 2 Stop bits

11: 1.5 Stop bit

Note: The 0.5 Stop bit and 1.5 Stop bit are not available for UART4 & UART5.

Bit 11 **CLKEN**: Clock enable

This bit allows the user to enable the CK pin.

0: CK pin disabled

1: CK pin enabled

This bit is not available for UART4 & UART5.

Bit 10 **CPOL**: Clock polarity

This bit allows the user to select the polarity of the clock output on the CK pin in synchronous mode. It works in conjunction with the CPHA bit to produce the desired clock/data relationship

0: Steady low value on CK pin outside transmission window.

1: Steady high value on CK pin outside transmission window.

This bit is not available for UART4 & UART5.

Bit 9 **CPHA**: Clock phase

This bit allows the user to select the phase of the clock output on the CK pin in synchronous mode. It works in conjunction with the CPOL bit to produce the desired clock/data relationship (see figures *308* to *309*)

0: The first clock transition is the first data capture edge

1: The second clock transition is the first data capture edge

Note: This bit is not available for UART4 & UART5.

Bit 8 **LBCL**: Last bit clock pulse

This bit allows the user to select whether the clock pulse associated with the last data bit transmitted (MSB) has to be output on the CK pin in synchronous mode.

0: The clock pulse of the last data bit is not output to the CK pin

1: The clock pulse of the last data bit is output to the CK pin

Note: 1: The last bit is the 8th or 9th data bit transmitted depending on the 8 or 9 bit format selected by the M bit in the USART_CR1 register.

2: This bit is not available for UART4 & UART5.

Bit 7 Reserved, must be kept at reset value

Bit 6 **LBDIE**: LIN break detection interrupt enable

Break interrupt mask (break detection using break delimiter).

0: Interrupt is inhibited

1: An interrupt is generated whenever LBD=1 in the USART_SR register

Bit 5 **LBDL**: *lin* break detection length

This bit is for selection between 11 bit or 10 bit break detection.

0: 10-bit break detection

1: 11-bit break detection

Bit 4 Reserved, must be kept at reset value

Bits 3:0 **ADD[3:0]**: Address of the USART node

This bit-field gives the address of the USART node.

This is used in multiprocessor communication during mute mode, for wake up with address mark detection.

Note: These 3 bits (CPOL, CPHA, LBCL) should not be written while the transmitter is enabled.

30.6.6 Control register 3 (USART_CR3)

Address offset: 0x14

Reset value: 0x0000 0000

31	30	29	28	27	26	25	24	23	22	21	20	19	18	17	16
Reserved															
15	14	13	12	11	10	9	8	7	6	5	4	3	2	1	0
Reserved				ONEBIT	CTSIE	CTSE	RTSE	DMAT	DMAR	SCEN	NACK	HDSEL	IRLP	IREN	EIE
				rw	rw	rw	rw	rw	rw	rw	rw	rw	rw	rw	rw

Bits 31:12 Reserved, must be kept at reset value

Bit 11 **ONEBIT**: One sample bit method enable

This bit allows the user to select the sample method. When the one sample bit method is selected the noise detection flag (NF) is disabled.

0: Three sample bit method

1: One sample bit method

Note: The ONEBIT feature applies only to data bits. It does not apply to START bit.

Bit 10 **CTSIE**: CTS interrupt enable

0: Interrupt is inhibited

1: An interrupt is generated whenever CTS=1 in the USART_SR register

Note: This bit is not available for UART4 & UART5.

Bit 9 **CTSE**: CTS enable

0: CTS hardware flow control disabled

1: CTS mode enabled, data is only transmitted when the CTS input is asserted (tied to 0). If the CTS input is deasserted while a data is being transmitted, then the transmission is completed before stopping. If a data is written into the data register while CTS is deasserted, the transmission is postponed until CTS is asserted.

Note: This bit is not available for UART4 & UART5.

Bit 8 **RTSE**: RTS enable

0: RTS hardware flow control disabled

1: RTS interrupt enabled, data is only requested when there is space in the receive buffer. The transmission of data is expected to cease after the current character has been transmitted. The RTS output is asserted (tied to 0) when a data can be received.

Note: This bit is not available for UART4 & UART5.

Bit 7 **DMAT**: DMA enable transmitter

This bit is set/reset by software

1: DMA mode is enabled for transmission.

0: DMA mode is disabled for transmission.

Bit 6 **DMAR**: DMA enable receiver

This bit is set/reset by software

1: DMA mode is enabled for reception

0: DMA mode is disabled for reception

Bit 5 **SCEN**: Smartcard mode enable

This bit is used for enabling Smartcard mode.

0: Smartcard Mode disabled

1: Smartcard Mode enabled

Note: This bit is not available for UART4 & UART5.

Bit 4 **NACK**: Smartcard NACK enable

0: NACK transmission in case of parity error is disabled

1: NACK transmission during parity error is enabled

Note: This bit is not available for UART4 & UART5.

Bit 3 **HDSEL**: Half-duplex selection

Selection of Single-wire Half-duplex mode

0: Half duplex mode is not selected

1: Half duplex mode is selected

Bit 2 **IRLP**: IrDA low-power

This bit is used for selecting between normal and low-power IrDA modes

0: Normal mode

1: Low-power mode

Bit 1 **IREN**: IrDA mode enable

This bit is set and cleared by software.

0: IrDA disabled

1: IrDA enabled

Bit 0 **EIE**: Error interrupt enable

Error Interrupt Enable Bit is required to enable interrupt generation in case of a framing error, overrun error or noise flag (FE=1 or ORE=1 or NF=1 in the USART_SR register) in case of Multi Buffer Communication (DMAR=1 in the USART_CR3 register).

0: Interrupt is inhibited

1: An interrupt is generated whenever DMAR=1 in the USART_CR3 register and FE=1 or ORE=1 or NF=1 in the USART_SR register.

30.6.7 Guard time and prescaler register (USART_GTPR)

Address offset: 0x18

Reset value: 0x0000 0000

31	30	29	28	27	26	25	24	23	22	21	20	19	18	17	16
Reserved															
15	14	13	12	11	10	9	8	7	6	5	4	3	2	1	0
GT[7:0]								PSC[7:0]							
rw	rw	rw	rw	rw	rw	rw	rw	rw	rw	rw	rw	rw	rw	rw	rw

Bits 31:16 Reserved, must be kept at reset value

Bits 15:8 **GT[7:0]**: Guard time value

This bit-field gives the Guard time value in terms of number of baud clocks.

This is used in Smartcard mode. The Transmission Complete flag is set after this guard time value.

Note: This bit is not available for UART4 & UART5.

Bits 7:0 **PSC[7:0]**: Prescaler value

– **In IrDA Low-power mode:**

PSC[7:0] = IrDA Low-Power Baud Rate

Used for programming the prescaler for dividing the system clock to achieve the low-power frequency:

The source clock is divided by the value given in the register (8 significant bits):

00000000: Reserved - do not program this value

00000001: divides the source clock by 1

00000010: divides the source clock by 2

...

– **In normal IrDA mode:** PSC must be set to 00000001.

– In smartcard mode:

PSC[4:0]: Prescaler value

Used for programming the prescaler for dividing the system clock to provide the smartcard clock.

The value given in the register (5 significant bits) is multiplied by 2 to give the division factor of the source clock frequency:

00000: Reserved - do not program this value

00001: divides the source clock by 2

00010: divides the source clock by 4

00011: divides the source clock by 6

...

Note: 1: Bits [7:5] have no effect if Smartcard mode is used.

2: This bit is not available for UART4 & UART5.

30.6.8 USART register map

The table below gives the USART register map and reset values.

Table 149. USART register map and reset values

Offset	Register	31	30	29	28	27	26	25	24	23	22	21	20	19	18	17	16	15	14	13	12	11	10	9	8	7	6	5	4	3	2	1	0
0x00	**USART_SR**	Reserved																						CTS	LBD	TXE	TC	RXNE	IDLE	ORE	NF	FE	PE
	Reset value																							0	0	1	1	0	0	0	0	0	0
0x04	**USART_DR**	Reserved																							DR[8:0]								
	Reset value																								0	0	0	0	0	0	0	0	0
0x08	**USART_BRR**	Reserved																DIV_Mantissa[15:4]												DIV_Fraction [3:0]			
	Reset value																	0	0	0	0	0	0	0	0	0	0	0	0	0	0	0	0
0x0C	**USART_CR1**	Reserved																OVER8	Reserved	UE	M	WAKE	PCE	PS	PEIE	TXEIE	TCIE	RXNEIE	IDLEIE	TE	RE	RWU	SBK
	Reset value																	0		0	0	0	0	0	0	0	0	0	0	0	0	0	0
0x10	**USART_CR2**	Reserved																	LINEN	STOP [1:0]		CLKEN	CPOL	CPHA	LBCL	Reserved	LBDIE	LBDL	Reserved	ADD[3:0]			
	Reset value																		0	0	0	0	0	0	0		0	0		0	0	0	0
0x14	**USART_CR3**	Reserved																				ONEBI	CTSIE	CTSE	RTSE	DMAT	DMAR	SCEN	NACK	HDSEL	IRLP	IREN	EIE
	Reset value																					0	0	0	0	0	0	0	0	0	0	0	0
0x18	**USART_GTPR**	Reserved																GT[7:0]								PSC[7:0]							
	Reset value																	0	0	0	0	0	0	0	0	0	0	0	0	0	0	0	0

Refer to *Section 2.3: Memory map* for the register boundary addresses.

31 Secure digital input/output interface (SDIO)

This section applies to the whole STM32F4xx family, unless otherwise specified.

31.1 SDIO main features

The SD/SDIO MMC card host interface (SDIO) provides an interface between the APB2 peripheral bus and MultiMediaCards (MMCs), SD memory cards, SDIO cards and CE-ATA devices.

The MultiMediaCard system specifications are available through the MultiMediaCard Association website at http://www.jedec.org/, published by the MMCA technical committee.

SD memory card and SD I/O card system specifications are available through the SD card Association website at http://www.sdcard.org.

CE-ATA system specifications are available through the CE-ATA workgroup website.

The SDIO features include the following:

- Full compliance with *MultiMediaCard System Specification Version 4.2*. Card support for three different databus modes: 1-bit (default), 4-bit and 8-bit
- Full compatibility with previous versions of MultiMediaCards (forward compatibility)
- Full compliance with *SD Memory Card Specifications Version 2.0*
- Full compliance with *SD I/O Card Specification Version 2.0:* card support for two different databus modes: 1-bit (default) and 4-bit
- Full support of the CE-ATA features (full compliance with *CE-ATA digital protocol Rev1.1*)
- Data transfer up to 50 MHz for the 8 bit mode
- Data and command output enable signals to control external bidirectional drivers.

Note: The SDIO does not have an SPI-compatible communication mode.

The SD memory card protocol is a superset of the MultiMediaCard protocol as defined in the MultiMediaCard system specification V2.11. Several commands required for SD memory devices are not supported by either SD I/O-only cards or the I/O portion of combo cards. Some of these commands have no use in SD I/O devices, such as erase commands, and thus are not supported in the SDIO. In addition, several commands are different between SD memory cards and SD I/O cards and thus are not supported in the SDIO. For details refer to SD I/O card Specification Version 1.0. CE-ATA is supported over the MMC electrical interface using a protocol that utilizes the existing MMC access primitives. The interface electrical and signaling definition is as defined in the MMC reference.

The MultiMediaCard/SD bus connects cards to the controller.

The current version of the SDIO supports only one SD/SDIO/MMC4.2 card at any one time and a stack of MMC4.1 or previous.

31.2 SDIO bus topology

Communication over the bus is based on command and data transfers.

The basic transaction on the MultiMediaCard/SD/SD I/O bus is the command/response transaction. These types of bus transaction transfer their information directly within the command or response structure. In addition, some operations have a data token.

Data transfers to/from SD/SDIO memory cards are done in data blocks. Data transfers to/from MMC are done data blocks or streams. Data transfers to/from the CE-ATA Devices are done in data blocks.

Figure 321. SDIO “no response” and “no data” operations

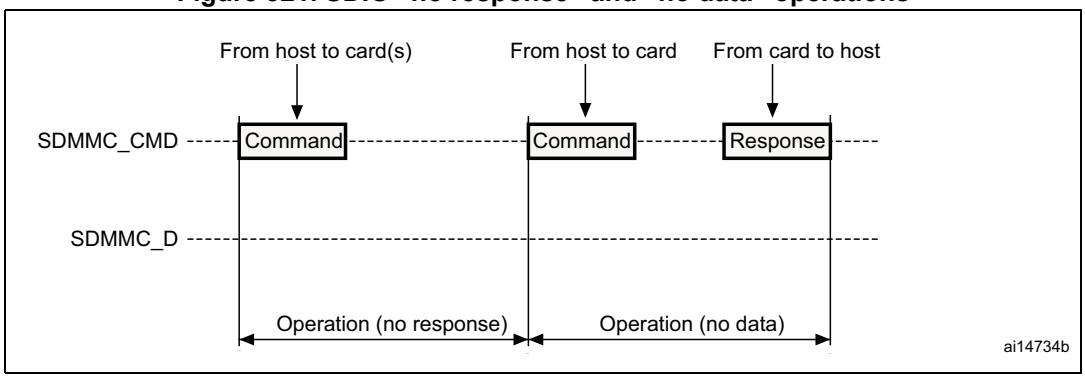

Figure 322. SDIO (multiple) block read operation

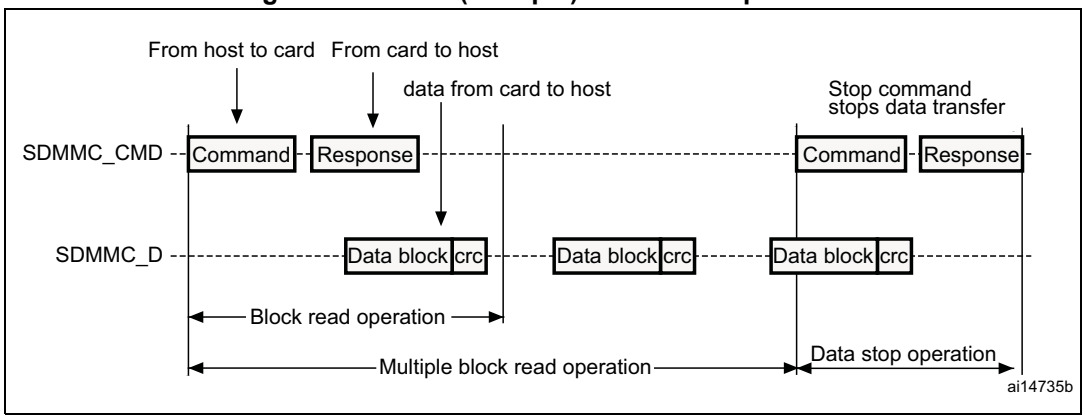

Figure 323. SDIO (multiple) block write operation

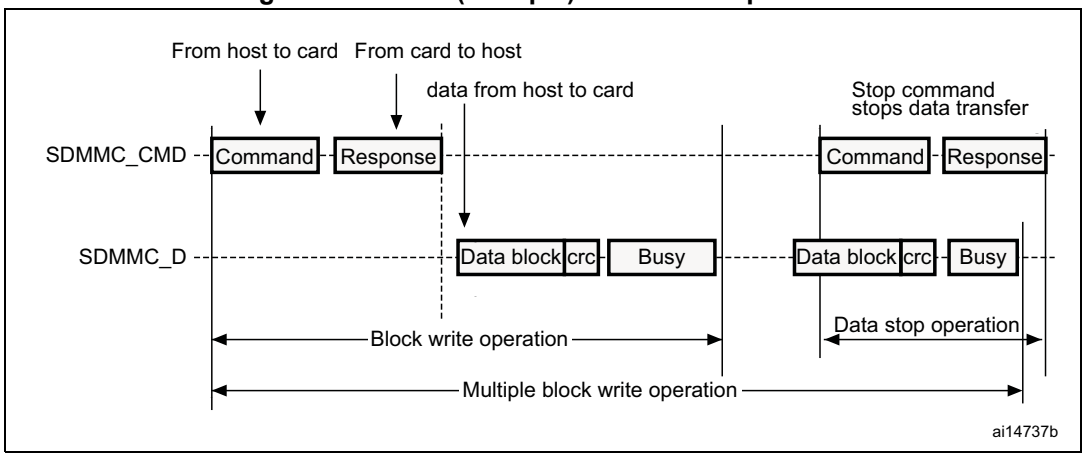

Note: The SDIO will not send any data as long as the Busy signal is asserted (SDIO_D0 pulled low).

Figure 324. SDIO sequential read operation

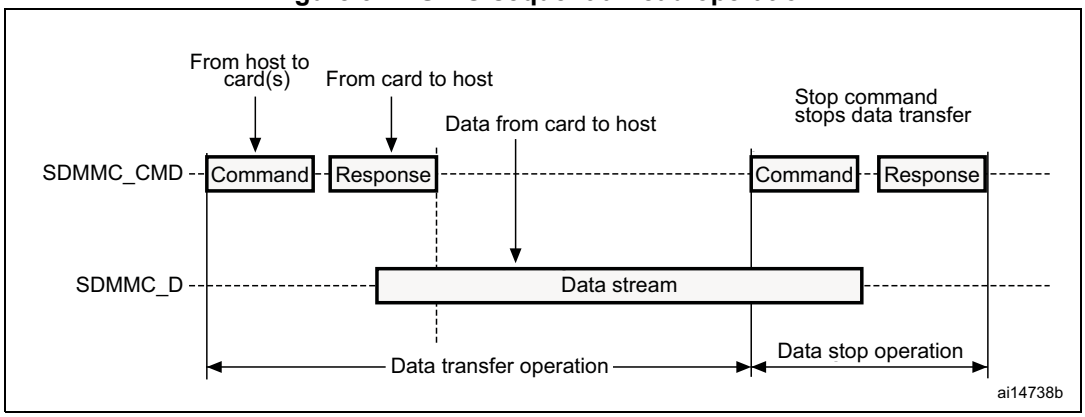

Figure 325. SDIO sequential write operation

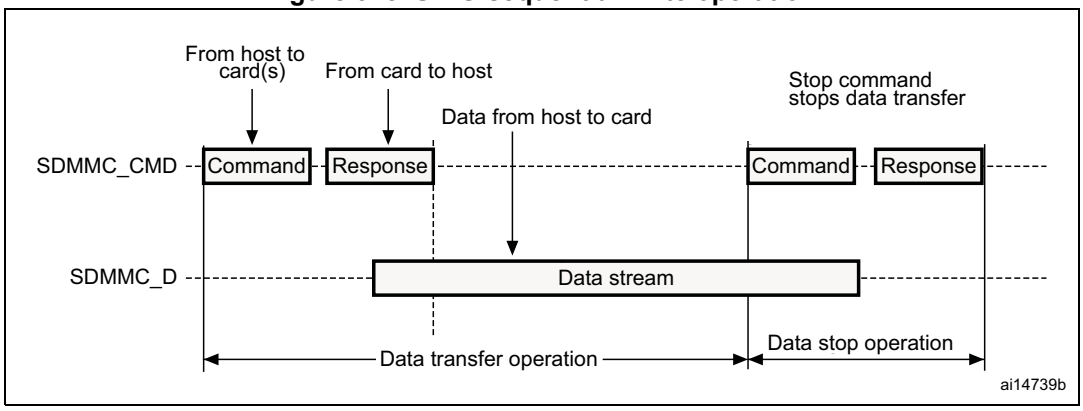

31.3 SDIO functional description

The SDIO consists of two parts:

- The SDIO adapter block provides all functions specific to the MMC/SD/SD I/O card such as the clock generation unit, command and data transfer.
- The APB2 interface accesses the SDIO adapter registers, and generates interrupt and DMA request signals.

Figure 326. SDIO block diagram

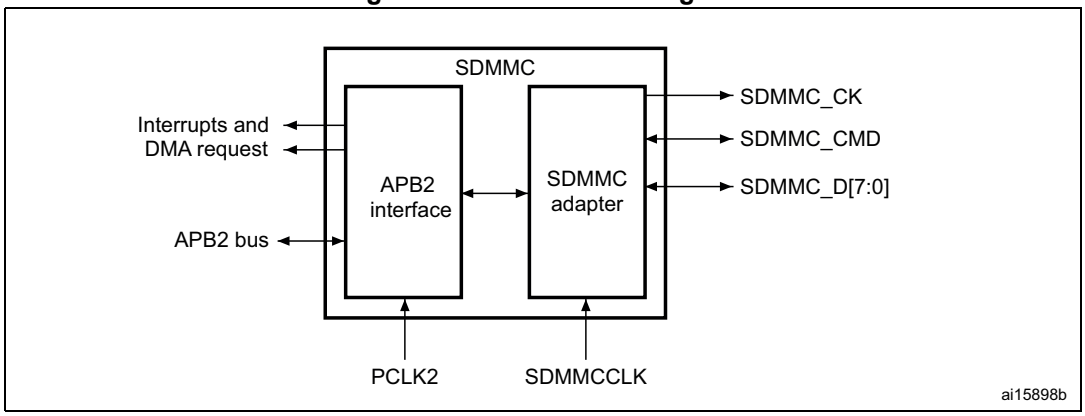

By default SDIO_D0 is used for data transfer. After initialization, the host can change the databus width.

If a MultiMediaCard is connected to the bus, SDIO_D0, SDIO_D[3:0] or SDIO_D[7:0] can be used for data transfer. MMC V3.31 or previous, supports only 1 bit of data so only SDIO_D0 can be used.

If an SD or SD I/O card is connected to the bus, data transfer can be configured by the host to use SDIO_D0 or SDIO_D[3:0]. All data lines are operating in push-pull mode.

SDIO_CMD has two operational modes:

- Open-drain for initialization (only for MMCV3.31 or previous)
- Push-pull for command transfer (SD/SD I/O card MMC4.2 use push-pull drivers also for initialization)

SDIO_CK is the clock to the card: one bit is transferred on both command and data lines with each clock cycle.

The SDIO uses two clock signals:

- SDIO adapter clock SDIOCLK up to 50 MHz (48 MHz when in use with USB)
- APB2 bus clock (PCLK2)

PCLK2 and SDIO_CK clock frequencies must respect the following condition:

$$\text{Frequenc}(\text{PCLK2}) \geq 3/8 \times \text{Frequency}(\text{SDIO_CK})$$

The signals shown in *Table 150* are used on the MultiMediaCard/SD/SD I/O card bus.

Table 150. SDIO I/O definitions

Pin	Direction	Description
SDIO_CK	Output	MultiMediaCard/SD/SDIO card clock. This pin is the clock from host to card.
SDIO_CMD	Bidirectional	MultiMediaCard/SD/SDIO card command. This pin is the bidirectional command/response signal.
SDIO_D[7:0]	Bidirectional	MultiMediaCard/SD/SDIO card data. These pins are the bidirectional databus.

31.3.1 SDIO adapter

Figure 327 shows a simplified block diagram of an SDIO adapter.

Figure 327. SDIO adapter

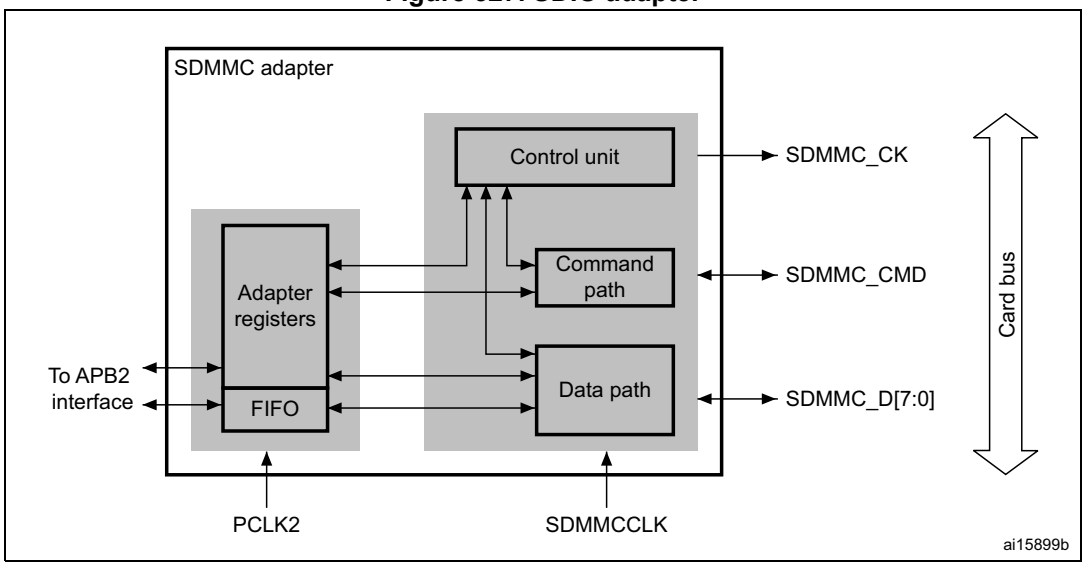

The SDIO adapter is a multimedia/secure digital memory card bus master that provides an interface to a multimedia card stack or to a secure digital memory card. It consists of five subunits:

- Adapter register block
- Control unit
- Command path
- Data path
- Data FIFO

*Note: The adapter registers and FIFO use the APB2 bus clock domain (*PCLK2*). The control unit, command path and data path use the SDIO adapter clock domain (SDIOCLK).*

Adapter register block

The adapter register block contains all system registers. This block also generates the signals that clear the static flags in the multimedia card. The clear signals are generated when 1 is written into the corresponding bit location in the SDIO Clear register.

Control unit

The control unit contains the power management functions and the clock divider for the memory card clock.

There are three power phases:

- power-off
- power-up
- power-on

Figure 328. Control unit

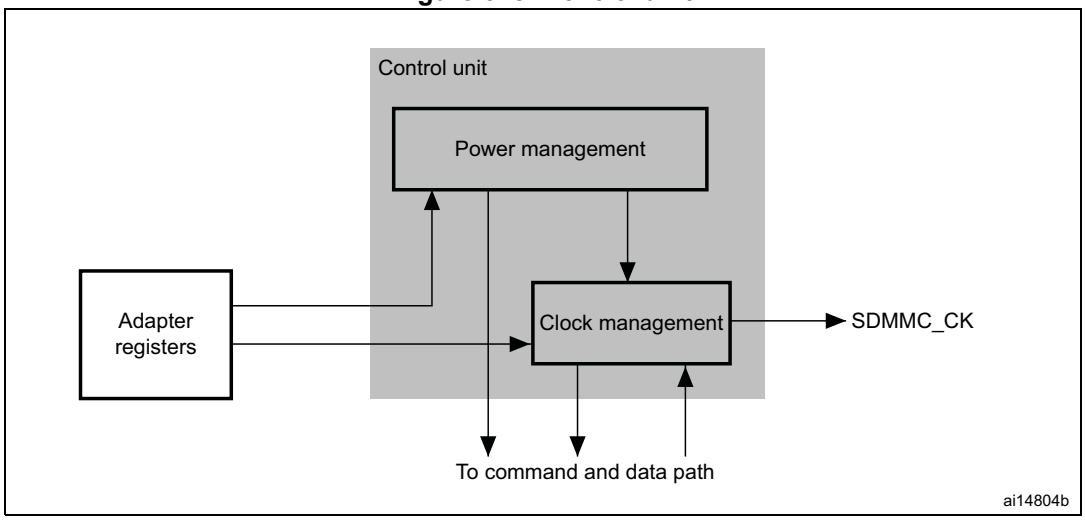

The control unit is illustrated in *Figure 328*. It consists of a power management subunit and a clock management subunit.

The power management subunit disables the card bus output signals during the power-off and power-up phases.

The clock management subunit generates and controls the SDIO_CK signal. The SDIO_CK output can use either the clock divide or the clock bypass mode. The clock output is inactive:

- after reset
- during the power-off or power-up phases
- if the power saving mode is enabled and the card bus is in the Idle state (eight clock periods after both the command and data path subunits enter the Idle phase)

Command path

The command path unit sends commands to and receives responses from the cards.

Figure 329. SDIO adapter command path

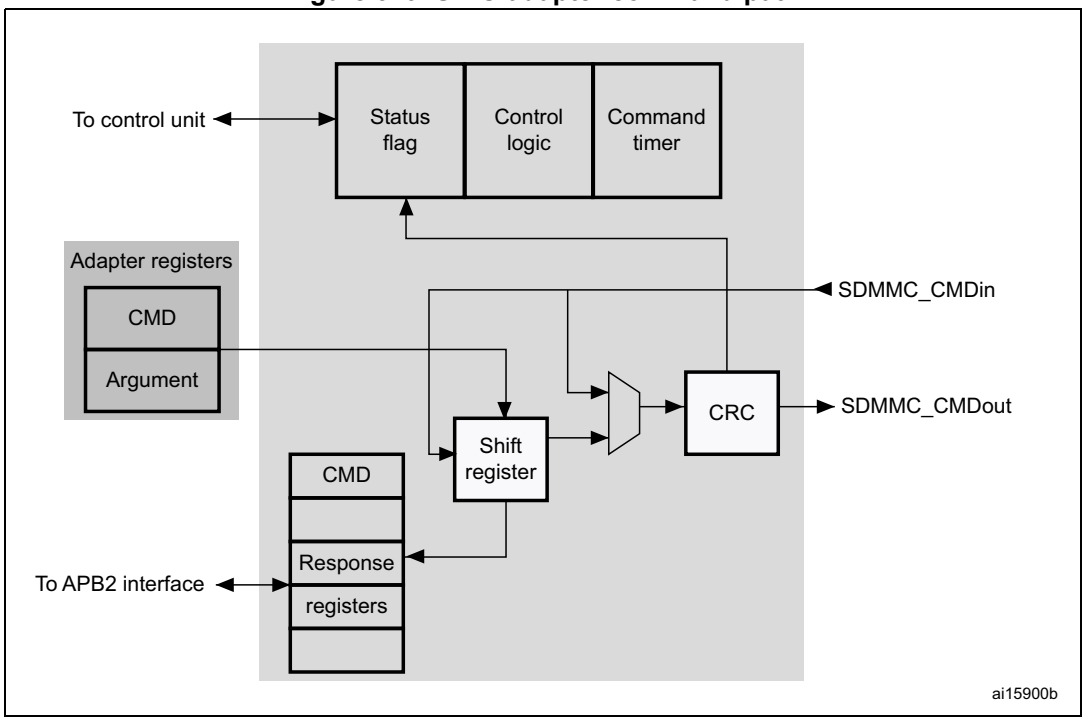

- Command path state machine (CPSM)
  - When the command register is written to and the enable bit is set, command transfer starts. When the command has been sent, the command path state machine (CPSM) sets the status flags and enters the Idle state if a response is not required. If a response is required, it waits for the response (see *Figure 330 on page 1026*). When the response is received, the received CRC code and the internally generated code are compared, and the appropriate status flags are set.

Figure 330. Command path state machine (CPSM)

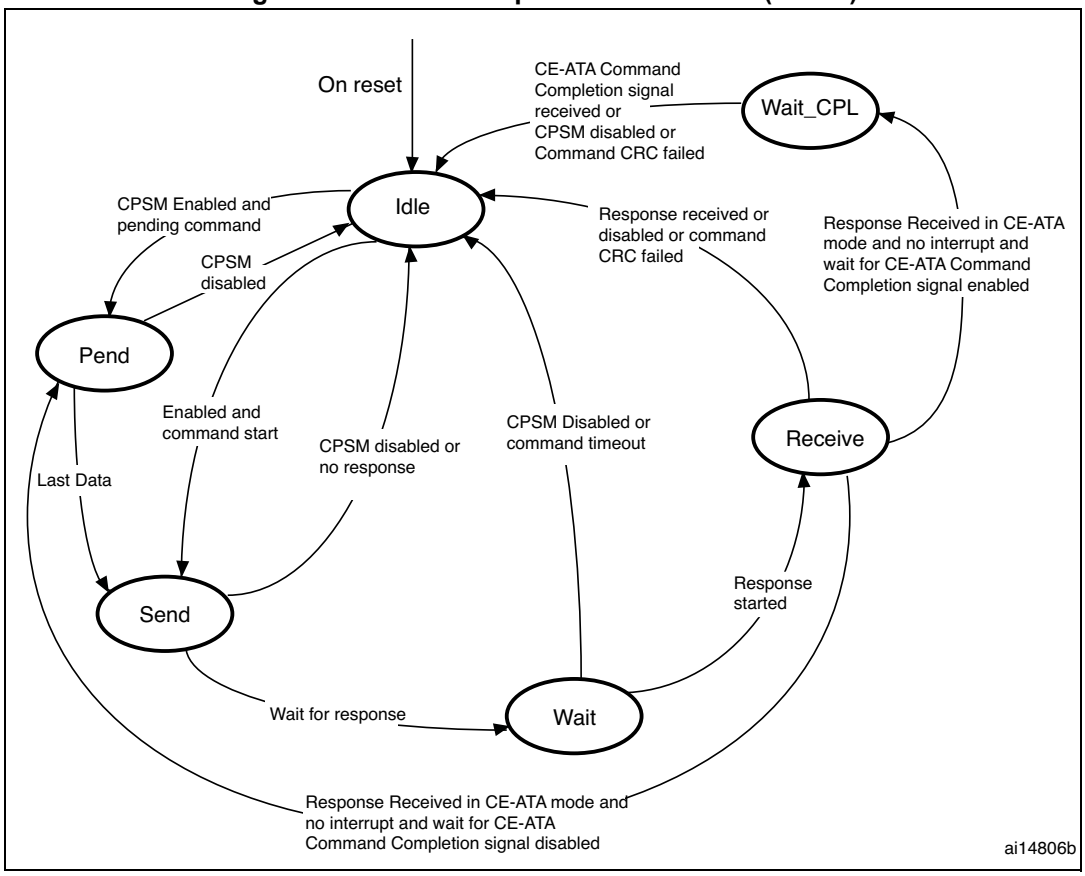

When the Wait state is entered, the command timer starts running. If the timeout is reached before the CPSM moves to the Receive state, the timeout flag is set and the Idle state is entered.

Note: The command timeout has a fixed value of 64 SDIO_CK clock periods.

If the interrupt bit is set in the command register, the timer is disabled and the CPSM waits for an interrupt request from one of the cards. If a pending bit is set in the command register, the CPSM enters the Pend state, and waits for a CmdPend signal from the data path subunit. When CmdPend is detected, the CPSM moves to the Send state. This enables the data counter to trigger the stop command transmission.

Note: The CPSM remains in the Idle state for at least eight SDIO_CK periods to meet the N_{CC} and N_{RC} timing constraints. N_{CC} is the minimum delay between two host commands, and N_{RC} is the minimum delay between the host command and the card response.

Figure 331. SDIO command transfer

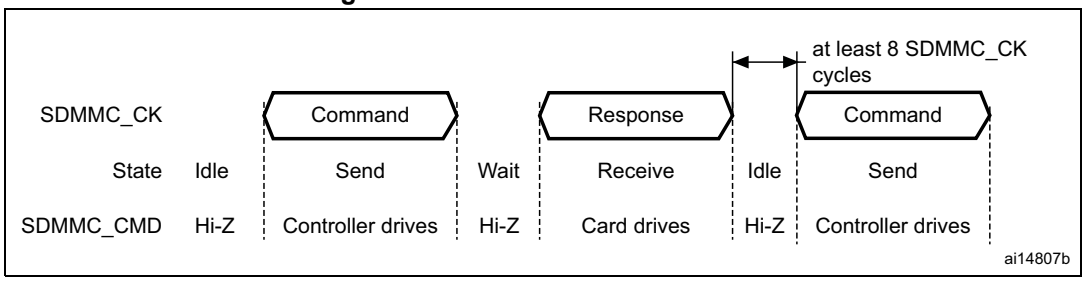

- Command format
  - Command: a command is a token that starts an operation. Command are sent from the host either to a single card (addressed command) or to all connected cards (broadcast command are available for MMC V3.31 or previous). Commands are transferred serially on the CMD line. All commands have a fixed length of 48 bits. The general format for a command token for MultiMediaCards, SD-Memory cards and SDIO-Cards is shown in *Table 151*. CE-ATA commands are an extension of MMC commands V4.2, and so have the same format.

    The command path operates in a half-duplex mode, so that commands and responses can either be sent or received. If the CPSM is not in the Send state, the SDIO_CMD output is in the Hi-Z state, as shown in *Figure 331 on page 1027*. Data on SDIO_CMD are synchronous with the rising edge of SDIO_CK. *Table* shows the command format.

Table 151. Command format

Bit position	Width	Value	Description
47	1	0	Start bit
46	1	1	Transmission bit
[45:40]	6	-	Command index
[39:8]	32	-	Argument
[7:1]	7	-	CRC7
0	1	1	End bit

  - Response: a response is a token that is sent from an addressed card (or synchronously from all connected cards for MMC V3.31 or previous), to the host as an answer to a previously received command. Responses are transferred serially on the CMD line.

The SDIO supports two response types. Both use CRC error checking:

- 48 bit short response
- 136 bit long response

Note: If the response does not contain a CRC (CMD1 response), the device driver must ignore the CRC failed status.

Table 152. Short response format

Bit position	Width	Value	Description
47	1	0	Start bit
46	1	0	Transmission bit
[45:40]	6	-	Command index
[39:8]	32	-	Argument
[7:1]	7	-	CRC7(or 1111111)
0	1	1	End bit

Table 153. Long response format

Bit position	Width	Value	Description
135	1	0	Start bit
134	1	0	Transmission bit
[133:128]	6	111111	Reserved
[127:1]	127	-	CID or CSD (including internal CRC7)
0	1	1	End bit

The command register contains the command index (six bits sent to a card) and the command type. These determine whether the command requires a response, and whether the response is 48 or 136 bits long (see *Section 31.9.4 on page 1062*). The command path implements the status flags shown in *Table 154*:

Table 154. Command path status flags

Flag	Description
CMDREND	Set if response CRC is OK.
CCRCFAIL	Set if response CRC fails.
CMDSENT	Set when command (that does not require response) is sent
CTIMEOUT	Response timeout.
CMDACT	Command transfer in progress.

The CRC generator calculates the CRC checksum for all bits before the CRC code. This includes the start bit, transmitter bit, command index, and command argument (or card status). The CRC checksum is calculated for the first 120 bits of CID or CSD for the long response format. Note that the start bit, transmitter bit and the six reserved bits are not used in the CRC calculation.

The CRC checksum is a 7-bit value:

$CRC[6:0] = \text{Remainder } [(M(x) * x^7) / G(x)]$

$G(x) = x^7 + x^3 + 1$

$M(x) = (\text{start bit}) * x^{39} + ... + (\text{last bit before CRC}) * x^0$, or

$M(x) = (\text{start bit}) * x^{119} + ... + (\text{last bit before CRC}) * x^0$

Data path

The data path subunit transfers data to and from cards. *Figure 332* shows a block diagram of the data path.

Figure 332. Data path

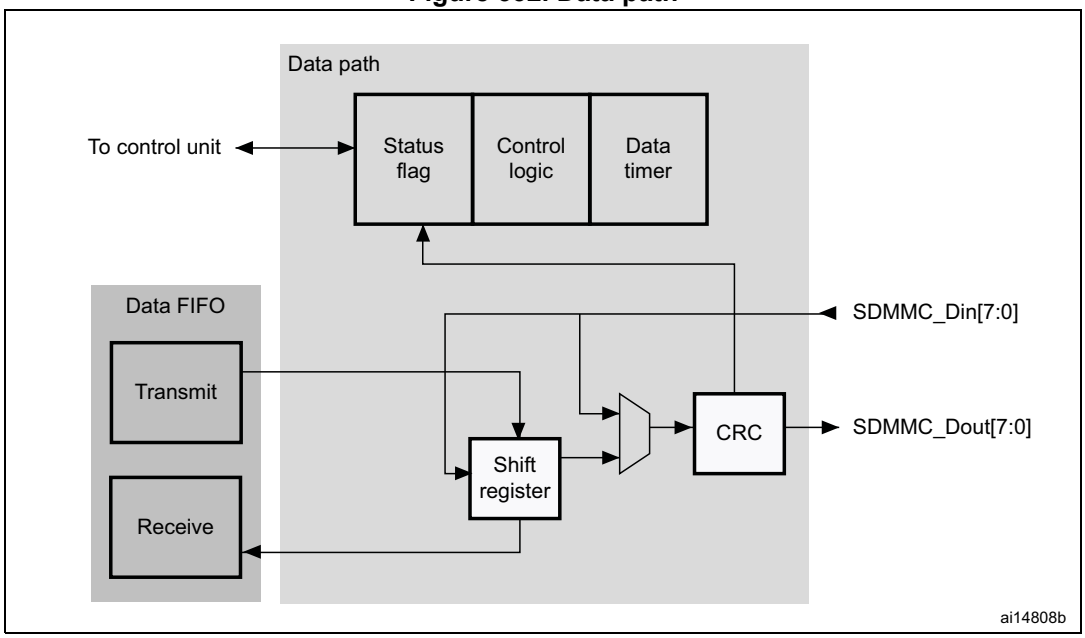

The card databus width can be programmed using the clock control register. If the 4-bit wide bus mode is enabled, data is transferred at four bits per clock cycle over all four data signals (SDIO_D[3:0]). If the 8-bit wide bus mode is enabled, data is transferred at eight bits per clock cycle over all eight data signals (SDIO_D[7:0]). If the wide bus mode is not enabled, only one bit per clock cycle is transferred over SDIO_D0.

Depending on the transfer direction (send or receive), the data path state machine (DPSM) moves to the Wait_S or Wait_R state when it is enabled:

- Send: the DPSM moves to the Wait_S state. If there is data in the transmit FIFO, the DPSM moves to the Send state, and the data path subunit starts sending data to a card.
- Receive: the DPSM moves to the Wait_R state and waits for a start bit. When it receives a start bit, the DPSM moves to the Receive state, and the data path subunit starts receiving data from a card.

Data path state machine (DPSM)

The DPSM operates at SDIO_CK frequency. Data on the card bus signals is synchronous to the rising edge of SDIO_CK. The DPSM has six states, as shown in *Figure 333: Data path state machine (DPSM)*.

Figure 333. Data path state machine (DPSM)

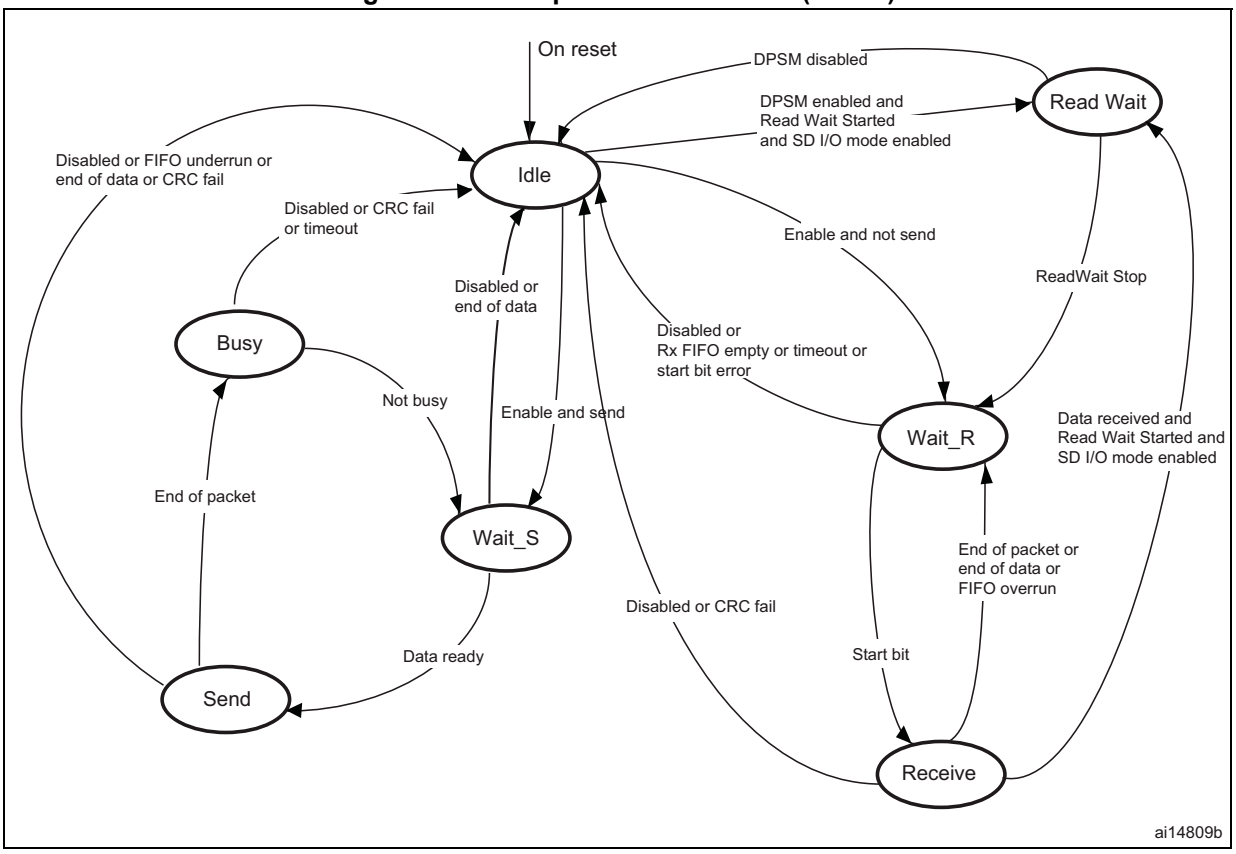

- Idle: the data path is inactive, and the SDIO_D[7:0] outputs are in Hi-Z. When the data control register is written and the enable bit is set, the DPSM loads the data counter with a new value and, depending on the data direction bit, moves to either the Wait_S or the Wait_R state.
- Wait_R: if the data counter equals zero, the DPSM moves to the Idle state when the receive FIFO is empty. If the data counter is not zero, the DPSM waits for a start bit on SDIO_D. The DPSM moves to the Receive state if it receives a start bit before a timeout, and loads the data block counter. If it reaches a timeout before it detects a start bit, or a start bit error occurs, it moves to the Idle state and sets the timeout status flag.
- Receive: serial data received from a card is packed in bytes and written to the data FIFO. Depending on the transfer mode bit in the data control register, the data transfer mode can be either block or stream:
  - In block mode, when the data block counter reaches zero, the DPSM waits until it receives the CRC code. If the received code matches the internally generated

CRC code, the DPSM moves to the Wait_R state. If not, the CRC fail status flag is set and the DPSM moves to the Idle state.

– In stream mode, the DPSM receives data while the data counter is not zero. When the counter is zero, the remaining data in the shift register is written to the data FIFO, and the DPSM moves to the Wait_R state.

If a FIFO overrun error occurs, the DPSM sets the FIFO error flag and moves to the Idle state:

- Wait_S: the DPSM moves to the Idle state if the data counter is zero. If not, it waits until the data FIFO empty flag is deasserted, and moves to the Send state.

Note: The DPSM remains in the Wait_S state for at least two clock periods to meet the N_{WR} timing requirements, where N_{WR} is the number of clock cycles between the reception of the card response and the start of the data transfer from the host.

- Send: the DPSM starts sending data to a card. Depending on the transfer mode bit in the data control register, the data transfer mode can be either block or stream:
  – In block mode, when the data block counter reaches zero, the DPSM sends an internally generated CRC code and end bit, and moves to the Busy state.
  – In stream mode, the DPSM sends data to a card while the enable bit is high and the data counter is not zero. It then moves to the Idle state.

  If a FIFO underrun error occurs, the DPSM sets the FIFO error flag and moves to the Idle state.
- Busy: the DPSM waits for the CRC status flag:
  – If it does not receive a positive CRC status, it moves to the Idle state and sets the CRC fail status flag.
  – If it receives a positive CRC status, it moves to the Wait_S state if SDIO_D0 is not low (the card is not busy).

  If a timeout occurs while the DPSM is in the Busy state, it sets the data timeout flag and moves to the Idle state.

  The data timer is enabled when the DPSM is in the Wait_R or Busy state, and generates the data timeout error:
  – When transmitting data, the timeout occurs if the DPSM stays in the Busy state for longer than the programmed timeout period
  – When receiving data, the timeout occurs if the end of the data is not true, and if the DPSM stays in the Wait_R state for longer than the programmed timeout period.
- **Data:** data can be transferred from the card to the host or vice versa. Data is transferred via the data lines. They are stored in a FIFO of 32 words, each word is 32 bits wide.

Table 155. Data token format

Description	Start bit	Data	CRC16	End bit
Block Data	0	-	yes	1
Stream Data	0	-	no	1

Data FIFO

The data FIFO (first-in-first-out) subunit is a data buffer with a transmit and receive unit.

The FIFO contains a 32-bit wide, 32-word deep data buffer, and transmit and receive logic. Because the data FIFO operates in the APB2 clock domain (PCLK2), all signals from the subunits in the SDIO clock domain (SDIOCLK) are resynchronized.

Depending on the TXACT and RXACT flags, the FIFO can be disabled, transmit enabled, or receive enabled. TXACT and RXACT are driven by the data path subunit and are mutually exclusive:

- The transmit FIFO refers to the transmit logic and data buffer when TXACT is asserted
- The receive FIFO refers to the receive logic and data buffer when RXACT is asserted

- Transmit FIFO:

  Data can be written to the transmit FIFO through the APB2 interface when the SDIO is enabled for transmission.

  The transmit FIFO is accessible via 32 sequential addresses. The transmit FIFO contains a data output register that holds the data word pointed to by the read pointer. When the data path subunit has loaded its shift register, it increments the read pointer and drives new data out.

  If the transmit FIFO is disabled, all status flags are deasserted. The data path subunit asserts TXACT when it transmits data.

Table 156. Transmit FIFO status flags

Flag	Description
TXFIFOF	Set to high when all 32 transmit FIFO words contain valid data.
TXFIFOE	Set to high when the transmit FIFO does not contain valid data.
TXFIFOHE	Set to high when 8 or more transmit FIFO words are empty. This flag can be used as a DMA request.
TXDAVL	Set to high when the transmit FIFO contains valid data. This flag is the inverse of the TXFIFOE flag.
TXUNDERR	Set to high when an underrun error occurs. This flag is cleared by writing to the SDIO Clear register.

- Receive FIFO

  When the data path subunit receives a word of data, it drives the data on the write databus. The write pointer is incremented after the write operation completes. On the read side, the contents of the FIFO word pointed to by the current value of the read pointer is driven onto the read databus. If the receive FIFO is disabled, all status flags are deasserted, and the read and write pointers are reset. The data path subunit asserts RXACT when it receives data. *Table 157* lists the receive FIFO status flags. The receive FIFO is accessible via 32 sequential addresses.

Table 157. Receive FIFO status flags

Flag	Description
RXFIFOF	Set to high when all 32 receive FIFO words contain valid data
RXFIFOE	Set to high when the receive FIFO does not contain valid data.
RXFIFOHF	Set to high when 8 or more receive FIFO words contain valid data. This flag can be used as a DMA request.
RXDAVL	Set to high when the receive FIFO is not empty. This flag is the inverse of the RXFIFOE flag.
RXOVERR	Set to high when an overrun error occurs. This flag is cleared by writing to the SDIO Clear register.

31.3.2 SDIO APB2 interface

The APB2 interface generates the interrupt and DMA requests, and accesses the SDIO adapter registers and the data FIFO. It consists of a data path, register decoder, and interrupt/DMA logic.

SDIO interrupts

The interrupt logic generates an interrupt request signal that is asserted when at least one of the selected status flags is high. A mask register is provided to allow selection of the conditions that will generate an interrupt. A status flag generates the interrupt request if a corresponding mask flag is set.

SDIO/DMA interface - procedure for data transfers between the SDIO and memory

In the example shown, the transfer is from the SDIO host controller to an MMC (512 bytes using CMD24 (WRITE_BLOCK). The SDIO FIFO is filled by data stored in a memory using the DMA controller.

1. Do the card identification process
2. Increase the SDIO_CK frequency
3. Select the card by sending CMD7
4. Configure the DMA2 as follows:
   a) Enable DMA2 controller and clear any pending interrupts.
   b) Program the DMA2_Stream3 or DMA2_Stream6 Channel4 source address register with the memory location's base address and DMA2_Stream3 or

DMA2_Stream6 Channel4 destination address register with the SDIO_FIFO register address.

c) Program DMA2_Stream3 or DMA2_Stream6 Channel4 control register (memory increment, not peripheral increment, peripheral and source width is word size).

d) Program DMA2_Stream3 or DMA2_Stream6 Channel4 to select the peripheral as flow controller (set PFCTRL bit in DMA_S3CR or DMA_S6CR configuration register).

e) Configure the incremental burst transfer to 4 beats (at least from peripheral side) in DMA2_Stream3 or DMA2_Stream6 Channel4.

f) Enable DMA2_Stream3 or DMA2_Stream6 Channel4

5. Send CMD24 (WRITE_BLOCK) as follows:

a) Program the SDIO data length register (SDIO data timer register should be already programmed before the card identification process).

b) Program the SDIO argument register with the address location of the card where data is to be transferred.

c) Program the SDIO command register: CmdIndex with 24 (WRITE_BLOCK); WaitResp with ‘1’ (SDIO card host waits for a response); CPSMEN with ‘1’ (SDIO card host enabled to send a command). Other fields are at their reset value.

d) Wait for SDIO_STA[6] = CMDREND interrupt, then program the SDIO data control register: DTEN with ‘1’ (SDIO card host enabled to send data); DTDIR with ‘0’ (from controller to card); DTMODE with ‘0’ (block data transfer); DMAEN with ‘1’ (DMA enabled); DBLOCKSIZE with 0x9 (512 bytes). Other fields are don’t care.

e) Wait for SDIO_STA[10] = DBCKEND.

6. Check that no channels are still enabled by polling the DMA Enabled Channel Status register.

31.4 Card functional description

31.4.1 Card identification mode

While in card identification mode the host resets all cards, validates the operation voltage range, identifies cards and sets a relative card address (RCA) for each card on the bus. All data communications in the card identification mode use the command line (CMD) only.

31.4.2 Card reset

The `GO_IDLE_STATE` command (CMD0) is the software reset command and it puts the MultiMediaCard and SD memory in the Idle state. The `IO_RW_DIRECT` command (CMD52) resets the SD I/O card. After power-up or CMD0, all cards output bus drivers are in the high-impedance state and the cards are initialized with a default relative card address (RCA=0x0001) and with a default driver stage register setting (lowest speed, highest driving current capability).

31.4.3 Operating voltage range validation

All cards can communicate with the SDIO card host using any operating voltage within the specification range. The supported minimum and maximum V_{DD} values are defined in the operation conditions register (OCR) on the card.

Cards that store the card identification number (CID) and card specific data (CSD) in the payload memory are able to communicate this information only under data-transfer V_{DD} conditions. When the SDIO card host module and the card have incompatible V_{DD} ranges, the card is not able to complete the identification cycle and cannot send CSD data. For this purpose, the special commands, `SEND_OP_COND` (CMD1), `SD_APP_OP_COND` (ACMD41 for SD Memory), and `IO_SEND_OP_COND` (CMD5 for SD I/O), are designed to provide a mechanism to identify and reject cards that do not match the V_{DD} range desired by the SDIO card host. The SDIO card host sends the required V_{DD} voltage window as the operand of these commands. Cards that cannot perform data transfer in the specified range disconnect from the bus and go to the inactive state.

By using these commands without including the voltage range as the operand, the SDIO card host can query each card and determine the common voltage range before placing out-of-range cards in the inactive state. This query is used when the SDIO card host is able to select a common voltage range or when the user requires notification that cards are not usable.

31.4.4 Card identification process

The card identification process differs for MultiMediaCards and SD cards. For MultiMediaCard cards, the identification process starts at clock rate F_{od}. The SDIO_CMD line output drivers are open-drain and allow parallel card operation during this process. The registration process is accomplished as follows:

1. The bus is activated.
2. The SDIO card host broadcasts `SEND_OP_COND` (CMD1) to receive operation conditions.
3. The response is the wired AND operation of the operation condition registers from all cards.
4. Incompatible cards are placed in the inactive state.
5. The SDIO card host broadcasts `ALL_SEND_CID` (CMD2) to all active cards.
6. The active cards simultaneously send their CID numbers serially. Cards with outgoing CID bits that do not match the bits on the command line stop transmitting and must wait for the next identification cycle. One card successfully transmits a full CID to the SDIO card host and enters the Identification state.
7. The SDIO card host issues `SET_RELATIVE_ADDR` (CMD3) to that card. This new address is called the relative card address (RCA); it is shorter than the CID and addresses the card. The assigned card changes to the Standby state, it does not react to further identification cycles, and its output switches from open-drain to push-pull.
8. The SDIO card host repeats steps 5 through 7 until it receives a timeout condition.

For the SD card, the identification process starts at clock rate F_{od}, and the SDIO_CMD line output drives are push-pull drivers instead of open-drain. The registration process is accomplished as follows:

1. The bus is activated.
2. The SDIO card host broadcasts `SD_APP_OP_COND` (ACMD41).
3. The cards respond with the contents of their operation condition registers.
4. The incompatible cards are placed in the inactive state.
5. The SDIO card host broadcasts `ALL_SEND_CID` (CMD2) to all active cards.
6. The cards send back their unique card identification numbers (CIDs) and enter the Identification state.
7. The SDIO card host issues `SET_RELATIVE_ADDR` (CMD3) to an active card with an address. This new address is called the relative card address (RCA); it is shorter than the CID and addresses the card. The assigned card changes to the Standby state. The SDIO card host can reissue this command to change the RCA. The RCA of the card is the last assigned value.
8. The SDIO card host repeats steps 5 through 7 with all active cards.

For the SD I/O card, the registration process is accomplished as follows:

1. The bus is activated.
2. The SDIO card host sends `IO_SEND_OP_COND` (CMD5).
3. The cards respond with the contents of their operation condition registers.
4. The incompatible cards are set to the inactive state.
5. The SDIO card host issues `SET_RELATIVE_ADDR` (CMD3) to an active card with an address. This new address is called the relative card address (RCA); it is shorter than the CID and addresses the card. The assigned card changes to the Standby state. The SDIO card host can reissue this command to change the RCA. The RCA of the card is the last assigned value.

31.4.5 Block write

During block write (CMD24 - 27) one or more blocks of data are transferred from the host to the card with a CRC appended to the end of each block by the host. A card supporting block write is always able to accept a block of data defined by WRITE_BL_LEN. If the CRC fails, the card indicates the failure on the SDIO_D line and the transferred data are discarded and not written, and all further transmitted blocks (in multiple block write mode) are ignored.

If the host uses partial blocks whose accumulated length is not block aligned and, block misalignment is not allowed (CSD parameter WRITE_BLK_MISALIGN is not set), the card will detect the block misalignment error before the beginning of the first misaligned block. (ADDRESS_ERROR error bit is set in the status register). The write operation will also be aborted if the host tries to write over a write-protected area. In this case, however, the card will set the WP_VIOLATION bit.

Programming of the CID and CSD registers does not require a previous block length setting. The transferred data is also CRC protected. If a part of the CSD or CID register is stored in ROM, then this unchangeable part must match the corresponding part of the receive buffer. If this match fails, then the card reports an error and does not change any register contents. Some cards may require long and unpredictable times to write a block of data. After receiving a block of data and completing the CRC check, the card begins writing and holds the SDIO_D line low if its write buffer is full and unable to accept new data from a new `WRITE_BLOCK` command. The host may poll the status of the card with a `SEND_STATUS` command (CMD13) at any time, and the card will respond with its status. The READY_FOR_DATA status bit indicates whether the card can accept new data or whether the write process is still in progress. The host may deselect the card by issuing CMD7 (to

select a different card), which will place the card in the Disconnect state and release the SDIO_D line(s) without interrupting the write operation. When selecting the card again, it will reactivate busy indication by pulling SDIO_D to low if programming is still in progress and the write buffer is unavailable.

31.4.6 Block read

In Block read mode the basic unit of data transfer is a block whose maximum size is defined in the CSD (READ_BL_LEN). If READ_BL_PARTIAL is set, smaller blocks whose start and end addresses are entirely contained within one physical block (as defined by READ_BL_LEN) may also be transmitted. A CRC is appended to the end of each block, ensuring data transfer integrity. CMD17 (`READ_SINGLE_BLOCK`) initiates a block read and after completing the transfer, the card returns to the Transfer state.

CMD18 (`READ_MULTIPLE_BLOCK`) starts a transfer of several consecutive blocks.

The host can abort reading at any time, within a multiple block operation, regardless of its type. Transaction abort is done by sending the stop transmission command.

If the card detects an error (for example, out of range, address misalignment or internal error) during a multiple block read operation (both types) it stops the data transmission and remains in the data state. The host must than abort the operation by sending the stop transmission command. The read error is reported in the response to the stop transmission command.

If the host sends a stop transmission command after the card transmits the last block of a multiple block operation with a predefined number of blocks, it is responded to as an illegal command, since the card is no longer in the data state. If the host uses partial blocks whose accumulated length is not block-aligned and block misalignment is not allowed, the card detects a block misalignment error condition at the beginning of the first misaligned block (ADDRESS_ERROR error bit is set in the status register).

31.4.7 Stream access, stream write and stream read (MultiMediaCard only)

In stream mode, data is transferred in bytes and no CRC is appended at the end of each block.

Stream write (MultiMediaCard only)

`WRITE_DAT_UNTIL_STOP` (CMD20) starts the data transfer from the SDIO card host to the card, beginning at the specified address and continuing until the SDIO card host issues a stop command. When partial blocks are allowed (CSD parameter WRITE_BL_PARTIAL is set), the data stream can start and stop at any address within the card address space, otherwise it can only start and stop at block boundaries. Because the amount of data to be transferred is not determined in advance, a CRC cannot be used. When the end of the memory range is reached while sending data and no stop command is sent by the SD card host, any additional transferred data are discarded.

The maximum clock frequency for a stream write operation is given by the following equation fields of the card-specific data register:

$$\text{Maximumspeed} = \text{MIN}(\text{TRANSPEED}, \frac{(8 \times 2^{\text{writebllen}})(-\text{NSAC})}{\text{TAAC} \times \text{R2WFACTOR}})$$

- Maximumspeed = maximum write frequency
- TRANSPEED = maximum data transfer rate
- writebllen = maximum write data block length
- NSAC = data read access time 2 in CLK cycles
- TAAC = data read access time 1
- R2WFACTOR = write speed factor

If the host attempts to use a higher frequency, the card may not be able to process the data and stop programming, set the OVERRUN error bit in the status register, and while ignoring all further data transfer, wait (in the receive data state) for a stop command. The write operation is also aborted if the host tries to write over a write-protected area. In this case, however, the card sets the WP_VIOLATION bit.

Stream read (MultiMediaCard only)

`READ_DAT_UNTIL_STOP` (CMD11) controls a stream-oriented data transfer.

This command instructs the card to send its data, starting at a specified address, until the SDIO card host sends `STOP_TRANSMISSION` (CMD12). The stop command has an execution delay due to the serial command transmission and the data transfer stops after the end bit of the stop command. When the end of the memory range is reached while sending data and no stop command is sent by the SDIO card host, any subsequent data sent are considered undefined.

The maximum clock frequency for a stream read operation is given by the following equation and uses fields of the card specific data register.

$$\text{Maximumspeed} = \text{MIN}(\text{TRANSPEED}, \frac{(8 \times 2^{\text{readbllen}})(-\text{NSAC})}{\text{TAAC} \times \text{R2WFACTOR}})$$

- Maximumspeed = maximum read frequency
- TRANSPEED = maximum data transfer rate
- readbllen = maximum read data block length
- writebllen = maximum write data block length
- NSAC = data read access time 2 in CLK cycles
- TAAC = data read access time 1
- R2WFACTOR = write speed factor

If the host attempts to use a higher frequency, the card is not able to sustain data transfer. If this happens, the card sets the UNDERRUN error bit in the status register, aborts the transmission and waits in the data state for a stop command.

31.4.8 Erase: group erase and sector erase

The erasable unit of the MultiMediaCard is the erase group. The erase group is measured in write blocks, which are the basic writable units of the card. The size of the erase group is a card-specific parameter and defined in the CSD.

The host can erase a contiguous range of Erase Groups. Starting the erase process is a three-step sequence.

First the host defines the start address of the range using the `ERASE_GROUP_START` (CMD35) command, next it defines the last address of the range using the `ERASE_GROUP_END` (CMD36) command and, finally, it starts the erase process by issuing the `ERASE` (CMD38) command. The address field in the erase commands is an Erase Group address in byte units. The card ignores all LSBs below the Erase Group size, effectively rounding the address down to the Erase Group boundary.

If an erase command is received out of sequence, the card sets the ERASE_SEQ_ERROR bit in the status register and resets the whole sequence.

If an out-of-sequence (neither of the erase commands, except SEND_STATUS) command received, the card sets the ERASE_RESET status bit in the status register, resets the erase sequence and executes the last command.

If the erase range includes write protected blocks, they are left intact and only unprotected blocks are erased. The WP_ERASE_SKIP status bit in the status register is set.

The card indicates that an erase is in progress by holding SDIO_D low. The actual erase time may be quite long, and the host may issue CMD7 to deselect the card.

31.4.9 Wide bus selection or deselection

Wide bus (4-bit bus width) operation mode is selected or deselected using `SET_BUS_WIDTH` (ACMD6). The default bus width after power-up or `GO_IDLE_STATE` (CMD0) is 1 bit. `SET_BUS_WIDTH` (ACMD6) is only valid in a transfer state, which means that the bus width can be changed only after a card is selected by `SELECT/DESELECT_CARD` (CMD7).

31.4.10 Protection management

Three write protection methods for the cards are supported in the SDIO card host module:

1. internal card write protection (card responsibility)
2. mechanical write protection switch (SDIO card host module responsibility only)
3. password-protected card lock operation

Internal card write protection

Card data can be protected against write and erase. By setting the permanent or temporary write-protect bits in the CSD, the entire card can be permanently write-protected by the manufacturer or content provider. For cards that support write protection of groups of sectors by setting the `WP_GRP_ENABLE` bit in the CSD, portions of the data can be protected, and the write protection can be changed by the application. The write protection is in units of `WP_GRP_SIZE` sectors as specified in the CSD. The `SET_WRITE_PROT` and `CLR_WRITE_PROT` commands control the protection of the addressed group. The `SEND_WRITE_PROT` command is similar to a single block read command. The card sends a data block containing 32 write protection bits (representing 32 write protect groups starting

at the specified address) followed by 16 CRC bits. The address field in the write protect commands is a group address in byte units.

The card ignores all LSBs below the group size.

Mechanical write protect switch

A mechanical sliding tab on the side of the card allows the user to set or clear the write protection on a card. When the sliding tab is positioned with the window open, the card is write-protected, and when the window is closed, the card contents can be changed. A matched switch on the socket side indicates to the SDIO card host module that the card is write-protected. The SDIO card host module is responsible for protecting the card. The position of the write protect switch is unknown to the internal circuitry of the card.

Password protect

The password protection feature enables the SDIO card host module to lock and unlock a card with a password. The password is stored in the 128-bit PWD register and its size is set in the 8-bit PWD_LEN register. These registers are nonvolatile so that a power cycle does not erase them. Locked cards respond to and execute certain commands. This means that the SDIO card host module is allowed to reset, initialize, select, and query for status, however it is not allowed to access data on the card. When the password is set (as indicated by a nonzero value of PWD_LEN), the card is locked automatically after power-up. As with the CSD and CID register write commands, the lock/unlock commands are available in the transfer state only. In this state, the command does not include an address argument and the card must be selected before using it. The card lock/unlock commands have the structure and bus transaction types of a regular single-block write command. The transferred data block includes all of the required information for the command (the password setting mode, the PWD itself, and card lock/unlock). The command data block size is defined by the SDIO card host module before it sends the card lock/unlock command, and has the structure shown in *Table 171*.

The bit settings are as follows:

- ERASE: setting it forces an erase operation. All other bits must be zero, and only the command byte is sent
- LOCK_UNLOCK: setting it locks the card. LOCK_UNLOCK can be set simultaneously with SET_PWD, however not with CLR_PWD
- CLR_PWD: setting it clears the password data
- SET_PWD: setting it saves the password data to memory
- PWD_LEN: it defines the length of the password in bytes
- PWD: the password (new or currently used, depending on the command)

The following sections list the command sequences to set/reset a password, lock/unlock the card, and force an erase.

Setting the password

1. Select a card (`SELECT/DESELECT_CARD`, CMD7), if none is already selected.
2. Define the block length (`SET_BLOCKLEN`, CMD16) to send, given by the 8-bit card lock/unlock mode, the 8-bit PWD_LEN, and the number of bytes of the new password.

When a password replacement is done, the block size must take into account that both the old and the new passwords are sent with the command.

3. Send LOCK/UNLOCK (CMD42) with the appropriate data block size on the data line including the 16-bit CRC. The data block indicates the mode (SET_PWD = 1), the length (PWD_LEN), and the password (PWD) itself. When a password replacement is done, the length value (PWD_LEN) includes the length of both passwords, the old and the new one, and the PWD field includes the old password (currently used) followed by the new password.
4. When the password is matched, the new password and its size are saved into the PWD and PWD_LEN fields, respectively. When the old password sent does not correspond (in size and/or content) to the expected password, the LOCK_UNLOCK_FAILED error bit is set in the card status register, and the password is not changed.

The password length field (PWD_LEN) indicates whether a password is currently set. When this field is nonzero, there is a password set and the card locks itself after power-up. It is possible to lock the card immediately in the current power session by setting the LOCK_UNLOCK bit (while setting the password) or sending an additional command for card locking.

Resetting the password

1. Select a card (SELECT/DESELECT_CARD, CMD7), if none is already selected.
2. Define the block length (SET_BLOCKLEN, CMD16) to send, given by the 8-bit card lock/unlock mode, the 8-bit PWD_LEN, and the number of bytes in the currently used password.
3. Send LOCK/UNLOCK (CMD42) with the appropriate data block size on the data line including the 16-bit CRC. The data block indicates the mode (CLR_PWD = 1), the length (PWD_LEN) and the password (PWD) itself. The LOCK_UNLOCK bit is ignored.
4. When the password is matched, the PWD field is cleared and PWD_LEN is set to 0. When the password sent does not correspond (in size and/or content) to the expected password, the LOCK_UNLOCK_FAILED error bit is set in the card status register, and the password is not changed.

Locking a card

1. Select a card (SELECT/DESELECT_CARD, CMD7), if none is already selected.
2. Define the block length (SET_BLOCKLEN, CMD16) to send, given by the 8-bit card lock/unlock mode (byte 0 in *Table 171*), the 8-bit PWD_LEN, and the number of bytes of the current password.
3. Send LOCK/UNLOCK (CMD42) with the appropriate data block size on the data line including the 16-bit CRC. The data block indicates the mode (LOCK_UNLOCK = 1), the length (PWD_LEN), and the password (PWD) itself.
4. When the password is matched, the card is locked and the CARD_IS_LOCKED status bit is set in the card status register. When the password sent does not correspond (in size and/or content) to the expected password, the LOCK_UNLOCK_FAILED error bit is set in the card status register, and the lock fails.

It is possible to set the password and to lock the card in the same sequence. In this case, the SDIO card host module performs all the required steps for setting the password (see *Setting the password on page 1040*), however it is necessary to set the LOCK_UNLOCK bit in Step 3 when the new password command is sent.

When the password is previously set (PWD_LEN is not 0), the card is locked automatically after power-on reset. An attempt to lock a locked card or to lock a card that does not have a password fails and the LOCK_UNLOCK_FAILED error bit is set in the card status register.

Unlocking the card

1. Select a card (`SELECT/DESELECT_CARD`, CMD7), if none is already selected.
2. Define the block length (`SET_BLOCKLEN`, CMD16) to send, given by the 8-bit cardlock/unlock mode (byte 0 in *Table 171*), the 8-bit PWD_LEN, and the number of bytes of the current password.
3. Send `LOCK/UNLOCK` (CMD42) with the appropriate data block size on the data line including the 16-bit CRC. The data block indicates the mode (LOCK_UNLOCK = 0), the length (PWD_LEN), and the password (PWD) itself.
4. When the password is matched, the card is unlocked and the CARD_IS_LOCKED status bit is cleared in the card status register. When the password sent is not correct in size and/or content and does not correspond to the expected password, the LOCK_UNLOCK_FAILED error bit is set in the card status register, and the card remains locked.

The unlocking function is only valid for the current power session. When the PWD field is not clear, the card is locked automatically on the next power-up.

An attempt to unlock an unlocked card fails and the LOCK_UNLOCK_FAILED error bit is set in the card status register.

Forcing erase

If the user has forgotten the password (PWD content), it is possible to access the card after clearing all the data on the card. This forced erase operation erases all card data and all password data.

1. Select a card (`SELECT/DESELECT_CARD`, CMD7), if none is already selected.
2. Set the block length (`SET_BLOCKLEN`, CMD16) to 1 byte. Only the 8-bit card lock/unlock byte (byte 0 in *Table 171*) is sent.
3. Send `LOCK/UNLOCK` (CMD42) with the appropriate data byte on the data line including the 16-bit CRC. The data block indicates the mode (ERASE = 1). All other bits must be zero.
4. When the ERASE bit is the only bit set in the data field, all card contents are erased, including the PWD and PWD_LEN fields, and the card is no longer locked. When any other bits are set, the LOCK_UNLOCK_FAILED error bit is set in the card status register and the card retains all of its data, and remains locked.

An attempt to use a force erase on an unlocked card fails and the LOCK_UNLOCK_FAILED error bit is set in the card status register.

31.4.11 Card status register

The response format R1 contains a 32-bit field named card status. This field is intended to transmit the card status information (which may be stored in a local status register) to the host. If not specified otherwise, the status entries are always related to the previously issued command.

Table 158 defines the different entries of the status. The type and clear condition fields in the table are abbreviated as follows:

Type:

- E: error bit
- S: status bit
- R: detected and set for the actual command response
- X: detected and set during command execution. The SDIO card host must poll the card by issuing the status command to read these bits.

Clear condition:

- A: according to the card current state
- B: always related to the previous command. Reception of a valid command clears it (with a delay of one command)
- C: clear by read

Table 158. Card status

Bits	Identifier	Type	Value	Description	Clear condition
31	ADDRESS_ OUT_OF_RANGE	E R X	’0’= no error ’1’= error	The command address argument was out of the allowed range for this card. A multiple block or stream read/write operation is (although started in a valid address) attempting to read or write beyond the card capacity.	C
30	ADDRESS_MISALIGN	-	’0’= no error ’1’= error	The commands address argument (in accordance with the currently set block length) positions the first data block misaligned to the card physical blocks. A multiple block read/write operation (although started with a valid address/block-length combination) is attempting to read or write a data block which is not aligned with the physical blocks of the card.	C
29	BLOCK_LEN_ERROR	-	’0’= no error ’1’= error	Either the argument of a SET_BLOCKLEN command exceeds the maximum value allowed for the card, or the previously defined block length is illegal for the current command (e.g. the host issues a write command, the current block length is smaller than the maximum allowed value for the card and it is not allowed to write partial blocks)	C
28	ERASE_SEQ_ERROR	-	’0’= no error ’1’= error	An error in the sequence of erase commands occurred.	C
27	ERASE_PARAM	E X	’0’= no error ’1’= error	An invalid selection of erase groups for erase occurred.	C
26	WP_VIOLATION	E X	’0’= no error ’1’= error	Attempt to program a write-protected block.	C

Table 158. Card status (continued)

Bits	Identifier	Type	Value	Description	Clear condition
25	CARD_IS_LOCKED	S R	‘0’ = card unlocked ‘1’ = card locked	When set, signals that the card is locked by the host	A
24	LOCK_UNLOCK_ FAILED	E X	’0’= no error ’1’= error	Set when a sequence or password error has been detected in lock/unlock card command	C
23	COM_CRC_ERROR	E R	’0’= no error ’1’= error	The CRC check of the previous command failed.	B
22	ILLEGAL_COMMAND	E R	’0’= no error ’1’= error	Command not legal for the card state	B
21	CARD_ECC_FAILED	E X	’0’= success ’1’= failure	Card internal ECC was applied but failed to correct the data.	C
20	CC_ERROR	E R	’0’= no error ’1’= error	(Undefined by the standard) A card error occurred, which is not related to the host command.	C
19	ERROR	E X	’0’= no error ’1’= error	(Undefined by the standard) A generic card error related to the (and detected during) execution of the last host command (e.g. read or write failures).	C
18	Reserved				
17	Reserved				
16	CID/CSD_OVERWRITE	E X	’0’= no error ‘1’= error	Can be either of the following errors: – The CID register has already been written and cannot be overwritten – The read-only section of the CSD does not match the card contents – An attempt to reverse the copy (set as original) or permanent WP (unprotected) bits was made	C
15	WP_ERASE_SKIP	E X	’0’= not protected ’1’= protected	**Set when only partial address space was erased due to existing write**	C
14	CARD_ECC_DISABLED	S X	’0’= enabled ’1’= disabled	The command has been executed without using the internal ECC.	A
13	ERASE_RESET	-	’0’= cleared ’1’= set	An erase sequence was cleared before executing because an out of erase sequence command was received (commands other than CMD35, CMD36, CMD38 or CMD13)	C

Table 158. Card status (continued)

Bits	Identifier	Type	Value	Description	Clear condition
12:9	CURRENT_STATE	S R	0 = Idle 1 = Ready 2 = Ident 3 = Stby 4 = Tran 5 = Data 6 = Rcv 7 = Prg 8 = Dis 9 = Btst 10-15 = reserved	The state of the card when receiving the command. If the command execution causes a state change, it will be visible to the host in the response on the next command. The four bits are interpreted as a binary number between 0 and 15.	B
8	READY_FOR_DATA	S R	’0’= not ready ‘1’ = ready	Corresponds to buffer empty signalling on the bus	-
7	SWITCH_ERROR	E X	’0’= no error ’1’= switch error	If set, the card did not switch to the expected mode as requested by the SWITCH command	B
6	Reserved				
5	APP_CMD	S R	‘0’ = Disabled ‘1’ = Enabled	The card will expect ACMD, or an indication that the command has been interpreted as ACMD	C
4	Reserved for SD I/O Card				
3	AKE_SEQ_ERROR	E R	’0’= no error ’1’= error	Error in the sequence of the authentication process	C
2	Reserved for application specific commands				
1	Reserved for manufacturer test mode				
0					

31.4.12 SD status register

The SD status contains status bits that are related to the SD memory card proprietary features and may be used for future application-specific usage. The size of the SD Status is one data block of 512 bits. The contents of this register are transmitted to the SDIO card host if ACMD13 is sent (CMD55 followed with CMD13). ACMD13 can be sent to a card in transfer state only (card is selected).

Table 159 defines the different entries of the SD status register. The type and clear condition fields in the table are abbreviated as follows:

Type:

- E: error bit
- S: status bit
- R: detected and set for the actual command response
- X: detected and set during command execution. The SDIO card Host must poll the card by issuing the status command to read these bits

Clear condition:

- A: according to the card current state
- B: always related to the previous command. Reception of a valid command clears it (with a delay of one command)
- C: clear by read

Table 159. SD status

Bits	Identifier	Type	Value	Description	Clear condition
511: 510	DAT_BUS_WIDTH	S R	’00’= 1 (default) ‘01’= reserved ‘10’= 4 bit width ‘11’= reserved	Shows the currently defined databus width that was defined by SET_BUS_WIDTH command	A
509	SECURED_MODE	S R	’0’= Not in the mode ’1’= In Secured Mode	Card is in Secured Mode of operation (refer to the “SD Security Specification”).	A
508: 496	Reserved				
495: 480	SD_CARD_TYPE	S R	’00xxh’= SD Memory Cards as defined in Physical Spec Ver1.01-2.00 (’x’= don’t care). The following cards are currently defined: ’0000’= Regular SD RD/WR Card. ’0001’= SD ROM Card	In the future, the 8 LSBs will be used to define different variations of an SD memory card (each bit will define different SD types). The 8 MSBs will be used to define SD Cards that do not comply with current SD physical layer specification.	A
479: 448	SIZE_OF_PROTECT ED_AREA	S R	Size of protected area (See below)	(See below)	A
447: 440	SPEED_CLASS	S R	Speed Class of the card (See below)	(See below)	A
439: 432	PERFORMANCE_MOVE	S R	Performance of move indicated by 1 [MB/s] step. (See below)	(See below)	A
431:428	AU_SIZE	S R	Size of AU (See below)	(See below)	A
427:424	Reserved				
423:408	ERASE_SIZE	S R	Number of AUs to be erased at a time	(See below)	A
407:402	ERASE_TIMEOUT	S R	Timeout value for erasing areas specified by UNIT_OF_ERASE_AU	(See below)	A
401:400	ERASE_OFFSET	S R	Fixed offset value added to erase time.	(See below)	A
399:312	Reserved				
311:0	Reserved for Manufacturer				

SIZE_OF_PROTECTED_AREA

Setting this field differs between standard- and high-capacity cards. In the case of a standard-capacity card, the capacity of protected area is calculated as follows:

Protected area = SIZE_OF_PROTECTED_AREA_* MULT * BLOCK_LEN.

SIZE_OF_PROTECTED_AREA is specified by the unit in MULT*BLOCK_LEN.

In the case of a high-capacity card, the capacity of protected area is specified in this field:

Protected area = SIZE_OF_PROTECTED_AREA

SIZE_OF_PROTECTED_AREA is specified by the unit in bytes.

SPEED_CLASS

This 8-bit field indicates the speed class and the value can be calculated by $P_W/2$ (where P_W is the write performance).

Table 160. Speed class code field

SPEED_CLASS	Value definition
00h	Class 0
01h	Class 2
02h	Class 4
03h	Class 6
04h – FFh	Reserved

PERFORMANCE_MOVE

This 8-bit field indicates Pm (performance move) and the value can be set by 1 [MB/sec] steps. If the card does not move used RUs (recording units), Pm should be considered as infinity. Setting the field to FFh means infinity.

Table 161. Performance move field

PERFORMANCE_MOVE	Value definition
00h	Not defined
01h	1 [MB/sec]
02h	02h 2 [MB/sec]
---------	---------
FEh	254 [MB/sec]
FFh	Infinity

AU_SIZE

This 4-bit field indicates the AU size and the value can be selected in the power of 2 base from 16 KB.

Table 162. AU_SIZE field

AU_SIZE	Value definition
00h	Not defined
01h	16 KB
02h	32 KB
03h	64 KB
04h	128 KB
05h	256 KB
06h	512 KB
07h	1 MB
08h	2 MB
09h	4 MB
Ah – Fh	Reserved

The maximum AU size, which depends on the card capacity, is defined in *Table 163*. The card can be set to any AU size between RU size and maximum AU size.

Table 163. Maximum AU size

Capacity	16 MB-64 MB	128 MB-256 MB	512 MB	1 GB-32 GB
Maximum AU Size	512 KB	1 MB	2 MB	4 MB

ERASE_SIZE

This 16-bit field indicates NERASE. When NERASE numbers of AUs are erased, the timeout value is specified by ERASE_TIMEOUT (Refer to *ERASE_TIMEOUT*). The host should determine the proper number of AUs to be erased in one operation so that the host can show the progress of the erase operation. If this field is set to 0, the erase timeout calculation is not supported.

Table 164. Erase size field

ERASE_SIZE	Value definition
0000h	Erase timeout calculation is not supported.
0001h	1 AU
0002h	2 AU
0003h	3 AU
---------	---------
FFFFh	65535 AU

ERASE_TIMEOUT

This 6-bit field indicates TERASE and the value indicates the erase timeout from offset when multiple AUs are being erased as specified by ERASE_SIZE. The range of ERASE_TIMEOUT can be defined as up to 63 seconds and the card manufacturer can choose any combination of ERASE_SIZE and ERASE_TIMEOUT depending on the implementation. Determining ERASE_TIMEOUT determines the ERASE_SIZE.

Table 165. Erase timeout field

ERASE_TIMEOUT	Value definition
00	Erase timeout calculation is not supported.
01	1 [sec]
02	2 [sec]
03	3 [sec]
---------	---------
63	63 [sec]

ERASE_OFFSET

This 2-bit field indicates T_{OFFSET} and one of four values can be selected. This field is meaningless if the ERASE_SIZE and ERASE_TIMEOUT fields are set to 0.

Table 166. Erase offset field

ERASE_OFFSET	Value definition
0h	0 [sec]
1h	1 [sec]
2h	2 [sec]
3h	3 [sec]

31.4.13 SD I/O mode

SD I/O interrupts

To allow the SD I/O card to interrupt the MultiMediaCard/SD module, an interrupt function is available on a pin on the SD interface. Pin 8, used as SDIO_D1 when operating in the 4-bit SD mode, signals the cards interrupt to the MultiMediaCard/SD module. The use of the interrupt is optional for each card or function within a card. The SD I/O interrupt is level-sensitive, which means that the interrupt line must be held active (low) until it is either recognized and acted upon by the MultiMediaCard/SD module or deasserted due to the end of the interrupt period. After the MultiMediaCard/SD module has serviced the interrupt, the interrupt status bit is cleared via an I/O write to the appropriate bit in the SD I/O card's internal registers. The interrupt output of all SD I/O cards is active low and the application must provide external pull-up resistors on all data lines (SDIO_D[3:0]). The MultiMediaCard/SD module samples the level of pin 8 (SDIO_D/IRQ) into the interrupt detector only during the interrupt period. At all other times, the MultiMediaCard/SD module ignores this value.

The interrupt period is applicable for both memory and I/O operations. The definition of the interrupt period for operations with single blocks is different from the definition for multiple-block data transfers.

SD I/O suspend and resume

Within a multifunction SD I/O or a card with both I/O and memory functions, there are multiple devices (I/O and memory) that share access to the MMC/SD bus. To share access to the MMC/SD module among multiple devices, SD I/O and combo cards optionally implement the concept of suspend/resume. When a card supports suspend/resume, the MMC/SD module can temporarily halt a data transfer operation to one function or memory (suspend) to free the bus for a higher-priority transfer to a different function or memory. After this higher-priority transfer is complete, the original transfer is resumed (restarted) where it left off. Support of suspend/resume is optional on a per-card basis. To perform the suspend/resume operation on the MMC/SD bus, the MMC/SD module performs the following steps:

1. Determines the function currently using the SDIO_D [3:0] line(s)
2. Requests the lower-priority or slower transaction to suspend
3. Waits for the transaction suspension to complete
4. Begins the higher-priority transaction
5. Waits for the completion of the higher priority transaction
6. Restores the suspended transaction

SD I/O ReadWait

The optional ReadWait (RW) operation is defined only for the SD 1-bit and 4-bit modes. The ReadWait operation allows the MMC/SD module to signal a card that it is reading multiple registers (IO_RW_EXTENDED, CMD53) to temporarily stall the data transfer while allowing the MMC/SD module to send commands to any function within the SD I/O device. To determine when a card supports the ReadWait protocol, the MMC/SD module must test capability bits in the internal card registers. The timing for ReadWait is based on the interrupt period.

31.4.14 Commands and responses

Application-specific and general commands

The SD card host module system is designed to provide a standard interface for a variety of applications types. In this environment, there is a need for specific customer/application features. To implement these features, two types of generic commands are defined in the standard: application-specific commands (ACMD) and general commands (GEN_CMD).

When the card receives the APP_CMD (CMD55) command, the card expects the next command to be an application-specific command. ACMDs have the same structure as regular MultiMediaCard commands and can have the same CMD number. The card recognizes it as ACMD because it appears after APP_CMD (CMD55). When the command immediately following the APP_CMD (CMD55) is not a defined application-specific command, the standard command is used. For example, when the card has a definition for SD_STATUS (ACMD13), and receives CMD13 immediately following APP_CMD (CMD55), this is interpreted as SD_STATUS (ACMD13). However, when the card receives CMD7 immediately following APP_CMD (CMD55) and the card does not have a definition for ACMD7, this is interpreted as the standard (SELECT/DESELECT_CARD) CMD7.

To use one of the manufacturer-specific ACMDs the SD card Host must perform the following steps:

1. Send APP_CMD (CMD55)
   The card responds to the MultiMediaCard/SD module, indicating that the APP_CMD bit is set and an ACMD is now expected.
2. Send the required ACMD
   The card responds to the MultiMediaCard/SD module, indicating that the APP_CMD bit is set and that the accepted command is interpreted as an ACMD. When a nonACMD is sent, it is handled by the card as a normal MultiMediaCard command and the APP_CMD bit in the card status register stays clear.

When an invalid command is sent (neither ACMD nor CMD) it is handled as a standard MultiMediaCard illegal command error.

The bus transaction for a GEN_CMD is the same as the single-block read or write commands (WRITE_BLOCK, CMD24 or READ_SINGLE_BLOCK,CMD17). In this case, the argument denotes the direction of the data transfer rather than the address, and the data block has vendor-specific format and meaning.

The card must be selected (in transfer state) before sending GEN_CMD (CMD56). The data block size is defined by SET_BLOCKLEN (CMD16). The response to GEN_CMD (CMD56) is in R1b format.

Command types

Both application-specific and general commands are divided into the four following types:

- **broadcast command (BC)**: sent to all cards; no responses returned.
- **broadcast command with response (BCR):** sent to all cards; responses received from all cards simultaneously.
- **addressed (point-to-point) command (AC):** sent to the card that is selected; does not include a data transfer on the SDIO_D line(s).
- **addressed (point-to-point) data transfer command (ADTC):** sent to the card that is selected; includes a data transfer on the SDIO_D line(s).

Command formats

See *Table 151 on page 1027* for command formats.

Commands for the MultiMediaCard/SD module

Table 167. Block-oriented write commands

CMD index	Type	Argument	Response format	Abbreviation	Description
CMD23	ac	[31:16] set to 0 [15:0] number of blocks	R1	`SET_BLOCK_COUNT`	Defines the number of blocks which are going to be transferred in the multiple-block read or write command that follows.
CMD24	adtc	[31:0] data address	R1	`WRITE_BLOCK`	Writes a block of the size selected by the SET_BLOCKLEN command.

Table 167. Block-oriented write commands (continued)

CMD index	Type	Argument	Response format	Abbreviation	Description
CMD25	adtc	[31:0] data address	R1	WRITE_MULTIPLE_BLOCK	Continuously writes blocks of data until a STOP_TRANSMISSION follows or the requested number of blocks has been received.
CMD26	adtc	[31:0] stuff bits	R1	PROGRAM_CID	Programming of the card identification register. This command must be issued only once per card. The card contains hardware to prevent this operation after the first programming. Normally this command is reserved for manufacturer.
CMD27	adtc	[31:0] stuff bits	R1	PROGRAM_CSD	Programming of the programmable bits of the CSD.

Table 168. Block-oriented write protection commands

CMD index	Type	Argument	Response format	Abbreviation	Description
CMD28	ac	[31:0] data address	R1b	SET_WRITE_PROT	If the card has write protection features, this command sets the write protection bit of the addressed group. The properties of write protection are coded in the card-specific data (WP_GRP_SIZE).
CMD29	ac	[31:0] data address	R1b	CLR_WRITE_PROT	If the card provides write protection features, this command clears the write protection bit of the addressed group.
CMD30	adtc	[31:0] write protect data address	R1	SEND_WRITE_PROT	If the card provides write protection features, this command asks the card to send the status of the write protection bits.
CMD31	Reserved				

Table 169. Erase commands

CMD index	Type	Argument	Response format	Abbreviation	Description
CMD32 ... CMD34	Reserved. These command indexes cannot be used in order to maintain backward compatibility with older versions of the MultiMediaCard.				
CMD35	ac	[31:0] data address	R1	ERASE_GROUP_START	Sets the address of the first erase group within a range to be selected for erase.
CMD36	ac	[31:0] data address	R1	ERASE_GROUP_END	Sets the address of the last erase group within a continuous range to be selected for erase.

Table 169. Erase commands (continued)

CMD index	Type	Argument	Response format	Abbreviation	Description
CMD37	Reserved. This command index cannot be used in order to maintain backward compatibility with older versions of the MultiMediaCards				
CMD38	ac	[31:0] stuff bits	R1	ERASE	Erases all previously selected write blocks.

Table 170. I/O mode commands

CMD index	Type	Argument	Response format	Abbreviation	Description
CMD39	ac	[31:16] RCA [15:15] register write flag [14:8] register address [7:0] register data	R4	FAST_IO	Used to write and read 8-bit (register) data fields. The command addresses a card and a register and provides the data for writing if the write flag is set. The R4 response contains data read from the addressed register. This command accesses application-dependent registers that are not defined in the MultiMediaCard standard.
CMD40	bcr	[31:0] stuff bits	R5	GO_IRQ_STATE	Places the system in the interrupt mode.
CMD41	Reserved				

Table 171. Lock card

CMD index	Type	Argument	Response format	Abbreviation	Description
CMD42	adtc	[31:0] stuff bits	R1b	LOCK_UNLOCK	Sets/resets the password or locks/unlocks the card. The size of the data block is set by the SET_BLOCK_LEN command.
CMD43 ... CMD54	Reserved				

Table 172. Application-specific commands

CMD index	Type	Argument	Response format	Abbreviation	Description
CMD55	ac	[31:16] RCA [15:0] stuff bits	R1	APP_CMD	Indicates to the card that the next command bits is an application specific command rather than a standard command
CMD56	adtc	[31:1] stuff bits [0]: RD/WR			Used either to transfer a data block to the card or to get a data block from the card for general purpose/application-specific commands. The size of the data block shall be set by the SET_BLOCK_LEN command.

Table 172. Application-specific commands (continued)

CMD index	Type	Argument	Response format	Abbreviation	Description
CMD57 ... CMD59	Reserved.				
CMD60 ... CMD63	Reserved for manufacturer.				

31.5 Response formats

All responses are sent via the MCCMD command line SDIO_CMD. The response transmission always starts with the left bit of the bit string corresponding to the response code word. The code length depends on the response type.

A response always starts with a start bit (always 0), followed by the bit indicating the direction of transmission (card = 0). A value denoted by x in the tables below indicates a variable entry. All responses, except for the R3 response type, are protected by a CRC. Every command code word is terminated by the end bit (always 1).

There are five types of responses. Their formats are defined as follows:

31.5.1 R1 (normal response command)

Code length = 48 bits. The 45:40 bits indicate the index of the command to be responded to, this value being interpreted as a binary-coded number (between 0 and 63). The status of the card is coded in 32 bits.

Table 173. R1 response

Bit position	Width (bits	Value	Description
47	1	0	Start bit
46	1	0	Transmission bit
[45:40]	6	X	Command index
[39:8]	32	X	Card status
[7:1]	7	X	CRC7
0	1	1	End bit

31.5.2 R1b

It is identical to R1 with an optional busy signal transmitted on the data line. The card may become busy after receiving these commands based on its state prior to the command reception.

31.5.3 R2 (CID, CSD register)

Code length = 136 bits. The contents of the CID register are sent as a response to the CMD2 and CMD10 commands. The contents of the CSD register are sent as a response to

CMD9. Only the bits [127...1] of the CID and CSD are transferred, the reserved bit [0] of these registers is replaced by the end bit of the response. The card indicates that an erase is in progress by holding MCDAT low. The actual erase time may be quite long, and the host may issue CMD7 to deselect the card.

Table 174. R2 response

Bit position	Width (bits	Value	Description
135	1	0	Start bit
134	1	0	Transmission bit
[133:128]	6	‘111111’	Command index
[127:1]	127	X	Card status
0	1	1	End bit

31.5.4 R3 (OCR register)

Code length: 48 bits. The contents of the OCR register are sent as a response to CMD1. The level coding is as follows: restricted voltage windows = low, card busy = low.

Table 175. R3 response

Bit position	Width (bits	Value	Description
47	1	0	Start bit
46	1	0	Transmission bit
[45:40]	6	‘111111’	Reserved
[39:8]	32	X	OCR register
[7:1]	7	‘1111111’	Reserved
0	1	1	End bit

31.5.5 R4 (Fast I/O)

Code length: 48 bits. The argument field contains the RCA of the addressed card, the register address to be read from or written to, and its content.

Table 176. R4 response

Bit position		Width (bits	Value	Description
47		1	0	Start bit
46		1	0	Transmission bit
[45:40]		6	‘100111’	CMD39
[39:8] Argument field	[31:16]	16	X	RCA
	[15:8]	8	X	register address
	[7:0]	8	X	read register contents

Table 176. R4 response (continued)

Bit position	Width (bits	Value	Description
[7:1]	7	X	CRC7
0	1	1	End bit

31.5.6 R4b

For SD I/O only: an SDIO card receiving the CMD5 will respond with a unique SDIO response R4. The format is:

Table 177. R4b response

Bit position		Width (bits	Value	Description
47		1	0	Start bit
46		1	0	Transmission bit
[45:40]		6	x	Reserved
[39:8] Argument field	39	16	X	Card is ready
	[38:36]	3	X	Number of I/O functions
	35	1	X	Present memory
	[34:32]	3	X	Stuff bits
	[31:8]	24	X	I/O ORC
[7:1]		7	X	Reserved
0		1	1	End bit

Once an SD I/O card has received a CMD5, the I/O portion of that card is enabled to respond normally to all further commands. This I/O enable of the function within the I/O card will remain set until a reset, power cycle or CMD52 with write to I/O reset is received by the card. Note that an SD memory-only card may respond to a CMD5. The proper response for a memory-only card would be *Present memory* = 1 and *Number of I/O functions* = 0. A memory-only card built to meet the SD Memory Card specification version 1.0 would detect the CMD5 as an illegal command and not respond. The I/O aware host will send CMD5. If the card responds with response R4, the host determines the card's configuration based on the data contained within the R4 response.

31.5.7 R5 (interrupt request)

Only for MultiMediaCard. Code length: 48 bits. If the response is generated by the host, the RCA field in the argument will be 0x0.

Table 178. R5 response

Bit position	Width (bits	Value	Description
47	1	0	Start bit
46	1	0	Transmission bit
[45:40]	6	'101000'	CMD40

Table 178. R5 response (continued)

Bit position		Width (bits	Value	Description
[39:8] Argument field	[31:16]	16	X	RCA [31:16] of winning card or of the host
	[15:0]	16	X	Not defined. May be used for IRQ data
[7:1]		7	X	CRC7
0		1	1	End bit

31.5.8 R6

Only for SD I/O. The normal response to CMD3 by a memory device. It is shown in *Table 179*.

Table 179. R6 response

Bit position		Width (bits)	Value	Description
47		1	0	Start bit
46		1	0	Transmission bit
[45:40]		6	‘101000’	CMD40
[39:8] Argument field	[31:16]	16	X	RCA [31:16] of winning card or of the host
	[15:0]	16	X	Not defined. May be used for IRQ data
[7:1]		7	X	CRC7
0		1	1	End bit

The card [23:8] status bits are changed when CMD3 is sent to an I/O-only card. In this case, the 16 bits of response are the SD I/O-only values:

- Bit [15] COM_CRC_ERROR
- Bit [14] ILLEGAL_COMMAND
- Bit [13] ERROR
- Bits [12:0] Reserved

31.6 SDIO I/O card-specific operations

The following features are SD I/O-specific operations:

- SDIO read wait operation by SDIO_D2 signalling
- SDIO read wait operation by stopping the clock
- SDIO suspend/resume operation (write and read suspend)
- SDIO interrupts

The SDIO supports these operations only if the SDIO_DCTRL[11] bit is set, except for read suspend that does not need specific hardware implementation.

31.6.1 SDIO I/O read wait operation by SDIO_D2 signaling

It is possible to start the readwait interval before the first block is received: when the data path is enabled (SDIO_DCTRL[0] bit set), the SDIO-specific operation is enabled (SDIO_DCTRL[11] bit set), read wait starts (SDI0_DCTRL[10] =0 and SDI_DCTRL[8] =1) and data direction is from card to SDIO (SDIO_DCTRL[1] = 1), the DPSM directly moves from Idle to Readwait. In Readwait the DPSM drives SDIO_D2 to 0 after 2 SDIO_CK clock cycles. In this state, when you set the RWSTOP bit (SDIO_DCTRL[9]), the DPSM remains in Wait for two more SDIO_CK clock cycles to drive SDIO_D2 to 1 for one clock cycle (in accordance with SDIO specification). The DPSM then starts waiting again until it receives data from the card. The DPSM will not start a readwait interval while receiving a block even if read wait start is set: the readwait interval will start after the CRC is received. The RWSTOP bit has to be cleared to start a new read wait operation. During the readwait interval, the SDIO can detect SDIO interrupts on SDIO_D1.

31.6.2 SDIO read wait operation by stopping SDIO_CK

If the SDIO card does not support the previous read wait method, the SDIO can perform a read wait by stopping SDIO_CK (SDIO_DCTRL is set just like in the method presented in *Section 31.6.1*, but SDIO_DCTRL[10] =1): DSPM stops the clock two SDIO_CK cycles after the end bit of the current received block and starts the clock again after the read wait start bit is set.

As SDIO_CK is stopped, any command can be issued to the card. During a read/wait interval, the SDIO can detect SDIO interrupts on SDIO_D1.

31.6.3 SDIO suspend/resume operation

While sending data to the card, the SDIO can suspend the write operation. the SDIO_CMD[11] bit is set and indicates to the CPSM that the current command is a suspend command. The CPSM analyzes the response and when the ACK is received from the card (suspend accepted), it acknowledges the DPSM that goes Idle after receiving the CRC token of the current block.

The hardware does not save the number of the remaining block to be sent to complete the suspended operation (resume).

The write operation can be suspended by software, just by disabling the DPSM (SDIO_DCTRL[0] =0) when the ACK of the suspend command is received from the card. The DPSM enters then the Idle state.

To suspend a read: the DPSM waits in the Wait_r state as the function to be suspended sends a complete packet just before stopping the data transaction. The application continues reading RxFIFO until the FIF0 is empty, and the DPSM goes Idle automatically.

31.6.4 SDIO interrupts

SDIO interrupts are detected on the SDIO_D1 line once the SDIO_DCTRL[11] bit is set.

31.7 CE-ATA specific operations

The following features are CE-ATA specific operations:

- sending the command completion signal disable to the CE-ATA device
- receiving the command completion signal from the CE-ATA device
- signaling the completion of the CE-ATA command to the CPU, using the status bit and/or interrupt.

The SDIO supports these operations only for the CE-ATA CMD61 command, that is, if SDIO_CMD[14] is set.

31.7.1 Command completion signal disable

Command completion signal disable is sent 8 bit cycles after the reception of a **short** response if the 'enable CMD completion' bit, SDIO_CMD[12], is not set and the 'not interrupt Enable' bit, SDIO_CMD[13], is set.

The CPSM enters the Pend state, loading the command shift register with the disable sequence "00001" and, the command counter with 43. Eight cycles after, a trigger moves the CPSM to the Send state. When the command counter reaches 48, the CPSM becomes Idle as no response is awaited.

31.7.2 Command completion signal enable

If the 'enable CMD completion' bit SDIO_CMD[12] is set and the 'not interrupt Enable' bit SDIO_CMD[13] is set, the CPSM waits for the command completion signal in the Waitcpl state.

When '0' is received on the CMD line, the CPSM enters the Idle state. No new command can be sent for 7 bit cycles. Then, for the last 5 cycles (out of the 7) the CMD line is driven to '1' in push-pull mode.

31.7.3 CE-ATA interrupt

The command completion is signaled to the CPU by the status bit SDIO_STA[23]. This static bit can be cleared with the clear bit SDIO_ICR[23].

The SDIO_STA[23] status bit can generate an interrupt on each interrupt line, depending on the mask bit SDIO_MASKx[23].

31.7.4 Aborting CMD61

If the command completion disable signal has not been sent and CMD61 needs to be aborted, the command state machine must be disabled. It then becomes Idle, and the CMD12 command can be sent. No command completion disable signal is sent during the operation.

31.8 HW flow control

The HW flow control functionality is used to avoid FIFO underrun (TX mode) and overrun (RX mode) errors.

The behavior is to stop SDIO_CK and freeze SDIO state machines. The data transfer is stalled while the FIFO is unable to transmit or receive data. Only state machines clocked by SDIOCLK are frozen, the APB2 interface is still alive. The FIFO can thus be filled or emptied even if flow control is activated.

To enable HW flow control, the SDIO_CLKCR[14] register bit must be set to 1. After reset Flow Control is disabled.

31.9 SDIO registers

The device communicates to the system via 32-bit-wide control registers accessible via APB2.

The peripheral registers have to be accessed by words (32 bits).

31.9.1 SDIO power control register (SDIO_POWER)

Address offset: 0x00

Reset value: 0x0000 0000

31	30	29	28	27	26	25	24	23	22	21	20	19	18	17	16	15	14	13	12	11	10	9	8	7	6	5	4	3	2	1	0
Reserved																														PWRCTRL	
																														rw	rw

Bits 31:2 Reserved, must be kept at reset value

Bits 1:0 **PWRCTRL:** Power supply control bits.

These bits are used to define the current functional state of the card clock:
00: Power-off: the clock to card is stopped.
01: Reserved
10: Reserved power-up
11: Power-on: the card is clocked.

Note: At least seven HCLK clock periods are needed between two write accesses to this register. After a data write, data cannot be written to this register for three SDIOCLK clock periods plus two PCLK2 clock periods.

31.9.2 SDI clock control register (SDIO_CLKCR)

Address offset: 0x04

Reset value: 0x0000 0000

The SDIO_CLKCR register controls the SDIO_CK output clock.

31	30	29	28	27	26	25	24	23	22	21	20	19	18	17	16	15	14	13	12	11	10	9	8	7	6	5	4	3	2	1	0
Reserved																	HWFC_EN	NEGEDGE	WID BUS		BYPASS	PWRSAV	CLKEN	CLKDIV							
																	rw	rw	rw	rw	rw	rw	rw	rw	rw	rw	rw	rw	rw	rw	rw

Bits 31:15 Reserved, must be kept at reset value

Bit 14 **HWFC_EN:** HW Flow Control enable

0b: HW Flow Control is disabled

1b: HW Flow Control is enabled

When HW Flow Control is enabled, the meaning of the TXFIFOE and RXFIFOF interrupt signals, please see SDIO Status register definition in *Section 31.9.11*.

Bit 13 **NEGEDGE:**SDIO_CK dephasing selection bit

0b: SDIO_CK generated on the rising edge of the master clock SDIOCLK

1b: SDIO_CK generated on the falling edge of the master clock SDIOCLK

Bits 12:11 **WIDBUS:** Wide bus mode enable bit

00: Default bus mode: SDIO_D0 used

01: 4-wide bus mode: SDIO_D[3:0] used

10: 8-wide bus mode: SDIO_D[7:0] used

Bit 10 **BYPASS:** Clock divider bypass enable bit

0: Disable bypass: SDIOCLK is divided according to the CLKDIV value before driving the SDIO_CK output signal.

1: Enable bypass: SDIOCLK directly drives the SDIO_CK output signal.

Bit 9 **PWRSAV:** Power saving configuration bit

For power saving, the SDIO_CK clock output can be disabled when the bus is idle by setting PWRSAV:

0: SDIO_CK clock is always enabled

1: SDIO_CK is only enabled when the bus is active

Bit 8 **CLKEN:** Clock enable bit

0: SDIO_CK is disabled

1: SDIO_CK is enabled

Bits 7:0 **CLKDIV:** Clock divide factor

This field defines the divide factor between the input clock (SDIOCLK) and the output clock (SDIO_CK): SDIO_CK frequency = SDIOCLK / [CLKDIV + 2].

Note: While the SD/SDIO card or MultiMediaCard is in identification mode, the SDIO_CK frequency must be less than 400 kHz.

The clock frequency can be changed to the maximum card bus frequency when relative card addresses are assigned to all cards.

After a data write, data cannot be written to this register for three SDIOCLK clock periods plus two PCLK2 clock periods. SDIO_CK can also be stopped during the read wait interval for SD I/O cards: in this case the SDIO_CLKCR register does not control SDIO_CK.

31.9.3 SDIO argument register (SDIO_ARG)

Address offset: 0x08

Reset value: 0x0000 0000

The SDIO_ARG register contains a 32-bit command argument, which is sent to a card as part of a command message.

31	30	29	28	27	26	25	24	23	22	21	20	19	18	17	16	15	14	13	12	11	10	9	8	7	6	5	4	3	2	1	0
CMDARG																															
rw	rw	rw	rw	rw	rw	rw	rw	rw	rw	rw	rw	rw	rw	rw	rw	rw	rw	rw	rw	rw	rw	rw	rw	rw	rw	rw	rw	rw	rw	rw	rw

Bits 31:0 **CMDARG:** Command argument

Command argument sent to a card as part of a command message. If a command contains an argument, it must be loaded into this register before writing a command to the command register.

31.9.4 SDIO command register (SDIO_CMD)

Address offset: 0x0C

Reset value: 0x0000 0000

The SDIO_CMD register contains the command index and command type bits. The command index is sent to a card as part of a command message. The command type bits control the command path state machine (CPSM).

31	30	29	28	27	26	25	24	23	22	21	20	19	18	17	16	15	14	13	12	11	10	9	8	7	6	5	4	3	2	1	0
Reserved																	CE-ATACMD	nIEN	ENCMDcompl	SDIOSuspend	CPSMEN	WAITPEND	WAITINT	WAITRESP		CMDINDEX					
																	rw	rw	rw	rw	rw	rw	rw	rw	rw	rw	rw	rw	rw	rw	rw

Bits 31:15 Reserved, must be kept at reset value

Bit 14 **ATACMD:** CE-ATA command

If ATACMD is set, the CPSM transfers CMD61.

Bit 13 **nIEN:** not Interrupt Enable

if this bit is 0, interrupts in the CE-ATA device are enabled.

Bit 12 **ENCMDcompl:** Enable CMD completion

If this bit is set, the command completion signal is enabled.

Bit 11 **SDIOSuspend:** SD I/O suspend command
If this bit is set, the command to be sent is a suspend command (to be used only with SDIO card).

Bit 10 **CPSMEN:** Command path state machine (CPSM) Enable bit
If this bit is set, the CPSM is enabled.

Bit 9 **WAITPEND:** CPSM Waits for ends of data transfer (CmdPend internal signal).
If this bit is set, the CPSM waits for the end of data transfer before it starts sending a command.

Bit 8 **WAITINT:** CPSM waits for interrupt request
If this bit is set, the CPSM disables command timeout and waits for an interrupt request.

Bits 7:6 **WAITRESP**: Wait for response bits
They are used to configure whether the CPSM is to wait for a response, and if yes, which kind of response.
00: No response, expect CMDSENT flag
01: Short response, expect CMDREND or CCRCFAIL flag
10: No response, expect CMDSENT flag
11: Long response, expect CMDREND or CCRCFAIL flag

Bits 5:0 **CMDINDEX:** Command index
The command index is sent to the card as part of a command message.

Note: After a data write, data cannot be written to this register for three SDIOCLK clock periods plus two PCLK2 clock periods.

MultiMediaCards can send two kinds of response: short responses, 48 bits long, or long responses,136 bits long. SD card and SD I/O card can send only short responses, the argument can vary according to the type of response: the software will distinguish the type of response according to the sent command. CE-ATA devices send only short responses.

31.9.5 SDIO command response register (SDIO_RESPCMD)

Address offset: 0x10

Reset value: 0x0000 0000

The SDIO_RESPCMD register contains the command index field of the last command response received. If the command response transmission does not contain the command index field (long or OCR response), the RESPCMD field is unknown, although it must contain 111111b (the value of the reserved field from the response).

31	30	29	28	27	26	25	24	23	22	21	20	19	18	17	16	15	14	13	12	11	10	9	8	7	6	5	4	3	2	1	0
Reserved																										RESPCMD					
																										r	r	r	r	r	r

Bits 31:6 Reserved, must be kept at reset value

Bits 5:0 **RESPCMD:** Response command index
Read-only bit field. Contains the command index of the last command response received.

31.9.6 SDIO response 1..4 register (SDIO_RESPx)

Address offset: (0x10 + (4 × x)); x = 1..4

Reset value: 0x0000 0000

The SDIO_RESP1/2/3/4 registers contain the status of a card, which is part of the received response.

31	30	29	28	27	26	25	24	23	22	21	20	19	18	17	16	15	14	13	12	11	10	9	8	7	6	5	4	3	2	1	0
CARDSTATUSx																															
r	r	r	r	r	r	r	r	r	r	r	r	r	r	r	r	r	r	r	r	r	r	r	r	r	r	r	r	r	r	r	r

Bits 31:0 **CARDSTATUSx:** see *Table 180*.

The Card Status size is 32 or 127 bits, depending on the response type.

Table 180. Response type and SDIO_RESPx registers

Register	Short response	Long response
SDIO_RESP1	Card Status[31:0]	Card Status [127:96]
SDIO_RESP2	Unused	Card Status [95:64]
SDIO_RESP3	Unused	Card Status [63:32]
SDIO_RESP4	Unused	Card Status [31:1]0b

The most significant bit of the card status is received first. The SDIO_RESP3 register LSB is always 0b.

31.9.7 SDIO data timer register (SDIO_DTIMER)

Address offset: 0x24

Reset value: 0x0000 0000

The SDIO_DTIMER register contains the data timeout period, in card bus clock periods.

A counter loads the value from the SDIO_DTIMER register, and starts decrementing when the data path state machine (DPSM) enters the Wait_R or Busy state. If the timer reaches 0 while the DPSM is in either of these states, the timeout status flag is set.

31	30	29	28	27	26	25	24	23	22	21	20	19	18	17	16	15	14	13	12	11	10	9	8	7	6	5	4	3	2	1	0
DATATIME																															
rw	rw	rw	rw	rw	rw	rw	rw	rw	rw	rw	rw	rw	rw	rw	rw	rw	rw	rw	rw	rw	rw	rw	rw	rw	rw	rw	rw	rw	rw	rw	rw

Bits 31:0 **DATATIME:** Data timeout period
Data timeout period expressed in card bus clock periods.

Note: A data transfer must be written to the data timer register and the data length register before being written to the data control register.

31.9.8 SDIO data length register (SDIO_DLEN)

Address offset: 0x28

Reset value: 0x0000 0000

The SDIO_DLEN register contains the number of data bytes to be transferred. The value is loaded into the data counter when data transfer starts.

31	30	29	28	27	26	25	24	23	22	21	20	19	18	17	16	15	14	13	12	11	10	9	8	7	6	5	4	3	2	1	0
Reserved							DATALENGTH																								
							rw	rw	rw	rw	rw	rw	rw	rw	rw	rw	rw	rw	rw	rw	rw	rw	rw	rw	rw	rw	rw	rw	rw	rw	rw

Bits 31:25 Reserved, must be kept at reset value

Bits 24:0 **DATALENGTH:** Data length value

Number of data bytes to be transferred.

Note: For a block data transfer, the value in the data length register must be a multiple of the block size (see SDIO_DCTRL). A data transfer must be written to the data timer register and the data length register before being written to the data control register.

For an SDIO multibyte transfer the value in the data length register must be between 1 and 512.

31.9.9 SDIO data control register (SDIO_DCTRL)

Address offset: 0x2C

Reset value: 0x0000 0000

The SDIO_DCTRL register control the data path state machine (DPSM).

31	30	29	28	27	26	25	24	23	22	21	20	19	18	17	16	15	14	13	12	11	10	9	8	7	6	5	4	3	2	1	0
Reserved																				SDIOEN	RWMOD	RWSTOP	RWSTART	DBLOCKSIZE				DMAEN	DTMODE	DTDIR	DTEN
																				rw	rw	rw	rw	rw	rw	rw	rw	rw	rw	rw	rw

Bits 31:12 Reserved, must be kept at reset value

Bit 11 **SDIOEN:** SD I/O enable functions
If this bit is set, the DPSM performs an SD I/O-card-specific operation.

Bit 10 **RWMOD:** Read wait mode
0: Read Wait control stopping SDIO_D2
1: Read Wait control using SDIO_CK

Bit 9 **RWSTOP:** Read wait stop
0: Read wait in progress if RWSTART bit is set
1: Enable for read wait stop if RWSTART bit is set

Bit 8 **RWSTART:** Read wait start
If this bit is set, read wait operation starts.

Bits 7:4 **DBLOCKSIZE:** Data block size
Define the data block length when the block data transfer mode is selected:
0000: (0 decimal) lock length = 2^0 = 1 byte
0001: (1 decimal) lock length = 2^1 = 2 bytes
0010: (2 decimal) lock length = 2^2 = 4 bytes
0011: (3 decimal) lock length = 2^3 = 8 bytes
0100: (4 decimal) lock length = 2^4 = 16 bytes
0101: (5 decimal) lock length = 2^5 = 32 bytes
0110: (6 decimal) lock length = 2^6 = 64 bytes
0111: (7 decimal) lock length = 2^7 = 128 bytes
1000: (8 decimal) lock length = 2^8 = 256 bytes
1001: (9 decimal) lock length = 2^9 = 512 bytes
1010: (10 decimal) lock length = 2^{10} = 1024 bytes
1011: (11 decimal) lock length = 2^{11} = 2048 bytes
1100: (12 decimal) lock length = 2^{12} = 4096 bytes
1101: (13 decimal) lock length = 2^{13} = 8192 bytes
1110: (14 decimal) lock length = 2^{14} = 16384 bytes
1111: (15 decimal) reserved

Bit 3 **DMAEN:** DMA enable bit
0: DMA disabled.
1: DMA enabled.

Bit 2 **DTMODE:** Data transfer mode selection 1: Stream or SDIO multibyte data transfer.
0: Block data transfer
1: Stream or SDIO multibyte data transfer

Bit 1 **DTDIR:** Data transfer direction selection
0: From controller to card.
1: From card to controller.

Bit 0 **DTEN:** Data transfer enabled bit
Data transfer starts if 1b is written to the DTEN bit. Depending on the direction bit, DTDIR, the DPSM moves to the Wait_S, Wait_R state or Readwait if RW Start is set immediately at the beginning of the transfer. It is not necessary to clear the enable bit after the end of a data transfer but the SDIO_DCTRL must be updated to enable a new data transfer

Note: After a data write, data cannot be written to this register for three SDIOCLK clock periods plus two PCLK2 clock periods.

The meaning of the DTMODE bit changes according to the value of the SDIOEN bit. When SDIOEN=0 and DTMODE=1, the MultiMediaCard stream mode is enabled, and when SDIOEN=1 and DTMODE=1, the peripheral enables an SDIO multibyte transfer.

31.9.10 SDIO data counter register (SDIO_DCOUNT)

Address offset: 0x30

Reset value: 0x0000 0000

The SDIO_DCOUNT register loads the value from the data length register (see SDIO_DLEN) when the DPSM moves from the Idle state to the Wait_R or Wait_S state. As data is transferred, the counter decrements the value until it reaches 0. The DPSM then moves to the Idle state and the data status end flag, DATAEND, is set.

31	30	29	28	27	26	25	24	23	22	21	20	19	18	17	16	15	14	13	12	11	10	9	8	7	6	5	4	3	2	1	0
Reserved							DATACOUNT																								
							r	r	r	r	r	r	r	r	r	r	r	r	r	r	r	r	r	r	r	r	r	r	r	r	r

Bits 31:25 Reserved, must be kept at reset value

Bits 24:0 **DATACOUNT:** Data count value
When this bit is read, the number of remaining data bytes to be transferred is returned. Write has no effect.

Note: This register should be read only when the data transfer is complete.

31.9.11 SDIO status register (SDIO_STA)

Address offset: 0x34

Reset value: 0x0000 0000

The SDIO_STA register is a read-only register. It contains two types of flag:

- Static flags (bits [23:22,10:0]): these bits remain asserted until they are cleared by writing to the SDIO Interrupt Clear register (see SDIO_ICR)
- Dynamic flags (bits [21:11]): these bits change state depending on the state of the underlying logic (for example, FIFO full and empty flags are asserted and deasserted as data while written to the FIFO)

31	30	29	28	27	26	25	24	23	22	21	20	19	18	17	16	15	14	13	12	11	10	9	8	7	6	5	4	3	2	1	0
Reserved								CEATAEND	SDIOIT	RXDAVL	TXDAVL	RXFIFOE	TXFIFOE	RXFIFOF	TXFIFOF	RXFIFOHF	TXFIFOHE	RXACT	TXACT	CMDACT	DBCKEND	STBITERR	DATAEND	CMDSENT	CMDREND	RXOVERR	TXUNDERR	DTIMEOUT	CTIMEOUT	DCRCFAIL	CCRCFAIL
								r	r	r	r	r	r	r	r	r	r	r	r	r	r	r	r	r	r	r	r	r	r	r	r

Bits 31:24 Reserved, must be kept at reset value

Bit 23 **CEATAEND:** CE-ATA command completion signal received for CMD61

Bit 22 **SDIOIT:** SDIO interrupt received

Bit 21 **RXDAVL:** Data available in receive FIFO

Bit 20 **TXDAVL:** Data available in transmit FIFO

Bit 19 **RXFIFOE:** Receive FIFO empty

Bit 18 **TXFIFOE:** Transmit FIFO empty

When HW Flow Control is enabled, TXFIFOE signals becomes activated when the FIFO contains 2 words.

Bit 17 **RXFIFOF:** Receive FIFO full

When HW Flow Control is enabled, RXFIFOF signals becomes activated 2 words before the FIFO is full.

Bit 16 **TXFIFOF:** Transmit FIFO full

Bit 15 **RXFIFOHF:** Receive FIFO half full: there are at least 8 words in the FIFO

Bit 14 **TXFIFOHE:** Transmit FIFO half empty: at least 8 words can be written into the FIFO

Bit 13 **RXACT:** Data receive in progress

Bit 12 **TXACT:** Data transmit in progress

Bit 11 **CMDACT:** Command transfer in progress

Bit 10 **DBCKEND:** Data block sent/received (CRC check passed)

Bit 9 **STBITERR:** Start bit not detected on all data signals in wide bus mode

Bit 8 **DATAEND:** Data end (data counter, SDIDCOUNT, is zero)

Bit 7 **CMDSENT:** Command sent (no response required)

Bit 6 **CMDREND:** Command response received (CRC check passed)

Bit 5 **RXOVERR:** Received FIFO overrun error

Bit 4 **TXUNDERR:** Transmit FIFO underrun error

Bit 3 **DTIMEOUT:** Data timeout

Bit 2 **CTIMEOUT:** Command response timeout
The Command TimeOut period has a fixed value of 64 SDIO_CK clock periods.

Bit 1 **DCRCFAIL:** Data block sent/received (CRC check failed)

Bit 0 **CCRCFAIL:** Command response received (CRC check failed)

31.9.12 SDIO interrupt clear register (SDIO_ICR)

Address offset: 0x38

Reset value: 0x0000 0000

The SDIO_ICR register is a write-only register. Writing a bit with 1b clears the corresponding bit in the SDIO_STA Status register.

31	30	29	28	27	26	25	24	23	22	21	20	19	18	17	16	15	14	13	12	11	10	9	8	7	6	5	4	3	2	1	0
Reserved								CEATAENDC	SDIOITC	Reserved											DBCKENDC	STBITERRC	DATAENDC	CMDSENTC	CMDRENDC	RXOVERRC	TXUNDERRC	DTIMEOUTC	CTIMEOUTC	DCRCFAILC	CCRCFAILC
								rw	rw												rw	rw	rw	rw	rw	rw	rw	rw	rw	rw	rw

Bits 31:24 Reserved, must be kept at reset value

Bit 23 **CEATAENDC:** CEATAEND flag clear bit
Set by software to clear the CEATAEND flag.
0: CEATAEND not cleared
1: CEATAEND cleared

Bit 22 **SDIOITC:** SDIOIT flag clear bit
Set by software to clear the SDIOIT flag.
0: SDIOIT not cleared
1: SDIOIT cleared

Bits 21:11 Reserved, must be kept at reset value

Bit 10 **DBCKENDC:** DBCKEND flag clear bit
Set by software to clear the DBCKEND flag.
0: DBCKEND not cleared
1: DBCKEND cleared

Bit 9 **STBITERRC:** STBITERR flag clear bit
Set by software to clear the STBITERR flag.
0: STBITERR not cleared
1: STBITERR cleared

Bit 8 **DATAENDC:** DATAEND flag clear bit
Set by software to clear the DATAEND flag.
0: DATAEND not cleared
1: DATAEND cleared

Bit 7 **CMDSENTC:** CMDSENT flag clear bit
Set by software to clear the CMDSENT flag.
0: CMDSENT not cleared
1: CMDSENT cleared

Bit 6 **CMDRENDC:** CMDREND flag clear bit
Set by software to clear the CMDREND flag.
0: CMDREND not cleared
1: CMDREND cleared

Bit 5 **RXOVERRC:** RXOVERR flag clear bit
Set by software to clear the RXOVERR flag.
0: RXOVERR not cleared
1: RXOVERR cleared

Bit 4 **TXUNDERRC:** TXUNDERR flag clear bit
Set by software to clear TXUNDERR flag.
0: TXUNDERR not cleared
1: TXUNDERR cleared

Bit 3 **DTIMEOUTC:** DTIMEOUT flag clear bit
Set by software to clear the DTIMEOUT flag.
0: DTIMEOUT not cleared
1: DTIMEOUT cleared

Bit 2 **CTIMEOUTC:** CTIMEOUT flag clear bit
Set by software to clear the CTIMEOUT flag.
0: CTIMEOUT not cleared
1: CTIMEOUT cleared

Bit 1 **DCRCFAILC:** DCRCFAIL flag clear bit
Set by software to clear the DCRCFAIL flag.
0: DCRCFAIL not cleared
1: DCRCFAIL cleared

Bit 0 **CCRCFAILC:** CCRCFAIL flag clear bit
Set by software to clear the CCRCFAIL flag.
0: CCRCFAIL not cleared
1: CCRCFAIL cleared

31.9.13 SDIO mask register (SDIO_MASK)

Address offset: 0x3C

Reset value: 0x0000 0000

The interrupt mask register determines which status flags generate an interrupt request by setting the corresponding bit to 1b.

31	30	29	28	27	26	25	24	23	22	21	20	19	18	17	16	15	14	13	12	11	10	9	8	7	6	5	4	3	2	1	0
Reserved								CEATAENDIE	SDIOITIE	RXDAVLIE	TXDAVLIE	RXFIFOEIE	TXFIFOEIE	RXFIFOFIE	TXFIFOFIE	RXFIFOHFIE	TXFIFOHEIE	RXACTIE	TXACTIE	CMDACTIE	DBCKENDIE	STBITERRIE	DATAENDIE	CMDSENTIE	CMDRENDIE	RXOVERRIE	TXUNDERRIE	DTIMEOUTIE	CTIMEOUTIE	DCRCFAILIE	CCRCFAILIE
								rw	rw	rw	rw	rw	rw	rw	rw	rw	rw	rw	rw	rw	rw	rw	rw	rw	rw	rw	rw	rw	rw	rw	rw

Bits 31:24 Reserved, must be kept at reset value

Bit 23 **CEATAENDIE:** CE-ATA command completion signal received interrupt enable

Set and cleared by software to enable/disable the interrupt generated when receiving the CE-ATA command completion signal.

0: CE-ATA command completion signal received interrupt disabled

1: CE-ATA command completion signal received interrupt enabled

Bit 22 **SDIOITIE:** SDIO mode interrupt received interrupt enable

Set and cleared by software to enable/disable the interrupt generated when receiving the SDIO mode interrupt.

0: SDIO Mode Interrupt Received interrupt disabled

1: SDIO Mode Interrupt Received interrupt enabled

Bit 21 **RXDAVLIE:** Data available in Rx FIFO interrupt enable

Set and cleared by software to enable/disable the interrupt generated by the presence of data available in Rx FIFO.

0: Data available in Rx FIFO interrupt disabled

1: Data available in Rx FIFO interrupt enabled

Bit 20 **TXDAVLIE:** Data available in Tx FIFO interrupt enable

Set and cleared by software to enable/disable the interrupt generated by the presence of data available in Tx FIFO.

0: Data available in Tx FIFO interrupt disabled

1: Data available in Tx FIFO interrupt enabled

Bit 19 **RXFIFOEIE:** Rx FIFO empty interrupt enable

Set and cleared by software to enable/disable interrupt caused by Rx FIFO empty.

0: Rx FIFO empty interrupt disabled

1: Rx FIFO empty interrupt enabled

Bit 18 **TXFIFOEIE:** Tx FIFO empty interrupt enable

Set and cleared by software to enable/disable interrupt caused by Tx FIFO empty.

0: Tx FIFO empty interrupt disabled

1: Tx FIFO empty interrupt enabled

Bit 17 **RXFIFOFIE:** Rx FIFO full interrupt enable

Set and cleared by software to enable/disable interrupt caused by Rx FIFO full.

0: Rx FIFO full interrupt disabled

1: Rx FIFO full interrupt enabled

Bit 16 **TXFIFOFIE:** Tx FIFO full interrupt enable
Set and cleared by software to enable/disable interrupt caused by Tx FIFO full.
0: Tx FIFO full interrupt disabled
1: Tx FIFO full interrupt enabled

Bit 15 **RXFIFOHFIE:** Rx FIFO half full interrupt enable
Set and cleared by software to enable/disable interrupt caused by Rx FIFO half full.
0: Rx FIFO half full interrupt disabled
1: Rx FIFO half full interrupt enabled

Bit 14 **TXFIFOHEIE:** Tx FIFO half empty interrupt enable
Set and cleared by software to enable/disable interrupt caused by Tx FIFO half empty.
0: Tx FIFO half empty interrupt disabled
1: Tx FIFO half empty interrupt enabled

Bit 13 **RXACTIE:** Data receive acting interrupt enable
Set and cleared by software to enable/disable interrupt caused by data being received (data receive acting).
0: Data receive acting interrupt disabled
1: Data receive acting interrupt enabled

Bit 12 **TXACTIE:** Data transmit acting interrupt enable
Set and cleared by software to enable/disable interrupt caused by data being transferred (data transmit acting).
0: Data transmit acting interrupt disabled
1: Data transmit acting interrupt enabled

Bit 11 **CMDACTIE:** Command acting interrupt enable
Set and cleared by software to enable/disable interrupt caused by a command being transferred (command acting).
0: Command acting interrupt disabled
1: Command acting interrupt enabled

Bit 10 **DBCKENDIE:** Data block end interrupt enable
Set and cleared by software to enable/disable interrupt caused by data block end.
0: Data block end interrupt disabled
1: Data block end interrupt enabled

Bit 9 **STBITERRIE:** Start bit error interrupt enable
Set and cleared by software to enable/disable interrupt caused by start bit error.
0: Start bit error interrupt disabled
1: Start bit error interrupt enabled

Bit 8 **DATAENDIE:** Data end interrupt enable
Set and cleared by software to enable/disable interrupt caused by data end.
0: Data end interrupt disabled
1: Data end interrupt enabled

Bit 7 **CMDSENTIE:** Command sent interrupt enable
Set and cleared by software to enable/disable interrupt caused by sending command.
0: Command sent interrupt disabled
1: Command sent interrupt enabled

Bit 6 **CMDRENDIE:** Command response received interrupt enable
Set and cleared by software to enable/disable interrupt caused by receiving command response.
0: Command response received interrupt disabled
1: command Response Received interrupt enabled

Bit 5 **RXOVERRIE:** Rx FIFO overrun error interrupt enable
Set and cleared by software to enable/disable interrupt caused by Rx FIFO overrun error.
0: Rx FIFO overrun error interrupt disabled
1: Rx FIFO overrun error interrupt enabled

Bit 4 **TXUNDERRIE:** Tx FIFO underrun error interrupt enable
Set and cleared by software to enable/disable interrupt caused by Tx FIFO underrun error.
0: Tx FIFO underrun error interrupt disabled
1: Tx FIFO underrun error interrupt enabled

Bit 3 **DTIMEOUTIE:** Data timeout interrupt enable
Set and cleared by software to enable/disable interrupt caused by data timeout.
0: Data timeout interrupt disabled
1: Data timeout interrupt enabled

Bit 2 **CTIMEOUTIE:** Command timeout interrupt enable
Set and cleared by software to enable/disable interrupt caused by command timeout.
0: Command timeout interrupt disabled
1: Command timeout interrupt enabled

Bit 1 **DCRCFAILIE:** Data CRC fail interrupt enable
Set and cleared by software to enable/disable interrupt caused by data CRC failure.
0: Data CRC fail interrupt disabled
1: Data CRC fail interrupt enabled

Bit 0 **CCRCFAILIE:** Command CRC fail interrupt enable
Set and cleared by software to enable/disable interrupt caused by command CRC failure.
0: Command CRC fail interrupt disabled
1: Command CRC fail interrupt enabled

31.9.14 SDIO FIFO counter register (SDIO_FIFOCNT)

Address offset: 0x48

Reset value: 0x0000 0000

The SDIO_FIFOCNT register contains the remaining number of words to be written to or read from the FIFO. The FIFO counter loads the value from the data length register (see SDIO_DLEN) when the data transfer enable bit, DTEN, is set in the data control register (SDIO_DCTRL register) and the DPSM is at the Idle state. If the data length is not word-aligned (multiple of 4), the remaining 1 to 3 bytes are regarded as a word.

31	30	29	28	27	26	25	24	23	22	21	20	19	18	17	16	15	14	13	12	11	10	9	8	7	6	5	4	3	2	1	0
Reserved								FIFOCOUNT																							
								r	r	r	r	r	r	r	r	r	r	r	r	r	r	r	r	r	r	r	r	r	r	r	r

Bits 31:24 Reserved, must be kept at reset value

Bits 23:0 **FIFOCOUNT:** Remaining number of words to be written to or read from the FIFO.

31.9.15 SDIO data FIFO register (SDIO_FIFO)

Address offset: 0x80

Reset value: 0x0000 0000

The receive and transmit FIFOs can be read or written as 32-bit wide registers. The FIFOs contain 32 entries on 32 sequential addresses. This allows the CPU to use its load and store multiple operands to read from/write to the FIFO.

31	30	29	28	27	26	25	24	23	22	21	20	19	18	17	16	15	14	13	12	11	10	9	8	7	6	5	4	3	2	1	0
FIF0Data																															
rw	rw	rw	rw	rw	rw	rw	rw	rw	rw	rw	rw	rw	rw	rw	rw	rw	rw	rw	rw	rw	rw	rw	rw	rw	rw	rw	rw	rw	rw	rw	rw

bits 31:0 **FIFOData:** Receive and transmit FIFO data

The FIFO data occupies 32 entries of 32-bit words, from address:
SDIO base + 0x080 to SDIO base + 0xFC.

31.9.16 SDIO register map

The following table summarizes the SDIO registers.

Table 181. SDIO register map

Offset	Register	31	30	29	28	27	26	25	24	23	22	21	20	19	18	17	16	15	14	13	12	11	10	9	8	7	6	5	4	3	2	1	0
0x00	**SDIO_POWER**	Reserved																														PWRCTRL	
0x04	**SDIO_CLKCR**	Reserved																	HWFC_EN	NEGEDGE	WIDBUS		BYPASS	PWRSAV	CLKEN	CLKDIV							
0x08	**SDIO_ARG**	CMDARG																															
0x0C	**SDIO_CMD**	Reserved																	CE-ATACMD	nIEN	ENCMDcompl	SDIOSuspend	CPSMEN	WAITPEND	WAITINT	WAITRESP	CMDINDEX						
0x10	**SDIO_RESPCMD**	Reserved																										RESPCMD					
0x14	**SDIO_RESP1**	CARDSTATUS1																															
0x18	**SDIO_RESP2**	CARDSTATUS2																															
0x1C	**SDIO_RESP3**	CARDSTATUS3																															
0x20	**SDIO_RESP4**	CARDSTATUS4																															
0x24	**SDIO_DTIMER**	DATATIME																															
0x28	**SDIO_DLEN**	Reserved							DATALENGTH																								
0x2C	**SDIO_DCTRL**	Reserved																				SDIOEN	RWMOD	RWSTOP	RWSTART	DBLOCKSIZE			DMAEN	DTMODE	DTDIR	DTEN	
0x30	**SDIO_DCOUNT**	Reserved							DATACOUNT																								

Table 181. SDIO register map (continued)

Offset	Register	31	30	29	28	27	26	25	24	23	22	21	20	19	18	17	16	15	14	13	12	11	10	9	8	7	6	5	4	3	2	1	0
0x34	**SDIO_STA**	Reserved								CEATAEND	SDIOIT	RXDAVL	TXDAVL	RXFIFOE	TXFIFOE	RXFIFOF	TXFIFOF	RXFIFOHF	TXFIFOHE	RXACT	TXACT	CMDACT	DBCKEND	STBITERR	DATAEND	CMDSENT	CMDREND	RXOVERR	TXUNDERR	DTIMEOUT	CTIMEOUT	DCRCFAIL	CCRCFAIL
0x38	**SDIO_ICR**	Reserved								CEATAENDC	SDIOITC	Reserved											DBCKENDC	STBITERRC	DATAENDC	CMDSENTC	CMDRENDC	RXOVERRC	TXUNDERRC	DTIMEOUTC	CTIMEOUTC	DCRCFAILC	CCRCFAILC
0x3C	**SDIO_MASK**	Reserved								CEATAENDIE	SDIOITIE	RXDAVLIE	TXDAVLIE	RXFIFOEIE	TXFIFOEIE	RXFIFOFIE	TXFIFOFIE	RXFIFOHFIE	TXFIFOHEIE	RXACTIE	TXACTIE	CMDACTIE	DBCKENDIE	STBITERRIE	DATAENDIE	CMDSENTIE	CMDRENDIE	RXOVERRIE	TXUNDERRIE	DTIMEOUTIE	CTIMEOUTIE	DCRCFAILIE	CCRCFAILIE
0x48	**SDIO_FIFOCNT**	Reserved								FIFOCOUNT																							
0x80	**SDIO_FIFO**	FIF0Data																															

32 Controller area network (bxCAN)

This section applies to the whole STM32F4xx family, unless otherwise specified.

32.1 bxCAN introduction

The **Basic Extended CAN** peripheral, named **bxCAN**, interfaces the CAN network. It supports the CAN protocols version 2.0A and B. It has been designed to manage a high number of incoming messages efficiently with a minimum CPU load. It also meets the priority requirements for transmit messages.

For safety-critical applications, the CAN controller provides all hardware functions for supporting the CAN Time Triggered Communication option.

32.2 bxCAN main features

- Supports CAN protocol version 2.0 A, B Active
- Bit rates up to 1 Mbit/s
- Supports the Time Triggered Communication option

Transmission

- Three transmit mailboxes
- Configurable transmit priority
- Time Stamp on SOF transmission

Reception

- Two receive FIFOs with three stages
- Scalable filter banks:
  - 28 filter banks shared between CAN1 and CAN2
- Identifier list feature
- Configurable FIFO overrun
- Time Stamp on SOF reception

Time-triggered communication option

- Disable automatic retransmission mode
- 16-bit free running timer
- Time Stamp sent in last two data bytes

Management

- Maskable interrupts
- Software-efficient mailbox mapping at a unique address space

Dual CAN

- CAN1: Master bxCAN for managing the communication between a Slave bxCAN and the 512-byte SRAM memory
- CAN2: Slave bxCAN, with no direct access to the SRAM memory.
- The two bxCAN cells share the 512-byte SRAM memory (see *Figure 335*)

32.3 bxCAN general description

In today's CAN applications, the number of nodes in a network is increasing and often several networks are linked together via gateways. Typically the number of messages in the system (and thus to be handled by each node) has significantly increased. In addition to the application messages, Network Management and Diagnostic messages have been introduced.

- An enhanced filtering mechanism is required to handle each type of message.

Furthermore, application tasks require more CPU time, therefore real-time constraints caused by message reception have to be reduced.

- A receive FIFO scheme allows the CPU to be dedicated to application tasks for a long time period without losing messages.

The standard HLP (Higher Layer Protocol) based on standard CAN drivers requires an efficient interface to the CAN controller.

Figure 334. CAN network topology

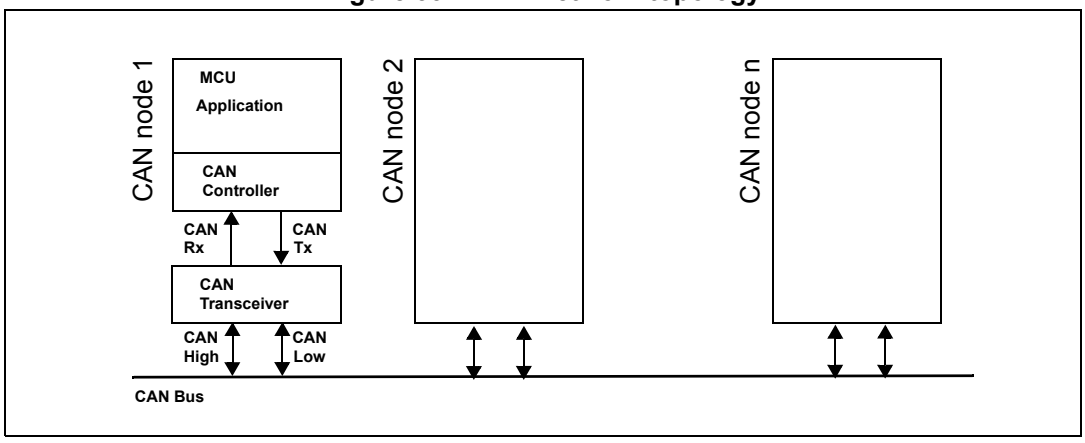

32.3.1 CAN 2.0B active core

The bxCAN module handles the transmission and the reception of CAN messages fully autonomously. Standard identifiers (11-bit) and extended identifiers (29-bit) are fully supported by hardware.

32.3.2 Control, status and configuration registers

The application uses these registers to:

- Configure CAN parameters, e.g. baud rate
- Request transmissions
- Handle receptions
- Manage interrupts
- Get diagnostic information

32.3.3 Tx mailboxes

Three transmit mailboxes are provided to the software for setting up messages. The transmission Scheduler decides which mailbox has to be transmitted first.

32.3.4 Acceptance filters

The bxCAN provides 28 scalable/configurable identifier filter banks for selecting the incoming messages the software needs and discarding the others.

Receive FIFO

Two receive FIFOs are used by hardware to store the incoming messages. Three complete messages can be stored in each FIFO. The FIFOs are managed completely by hardware.

Figure 335. Dual CAN block diagram

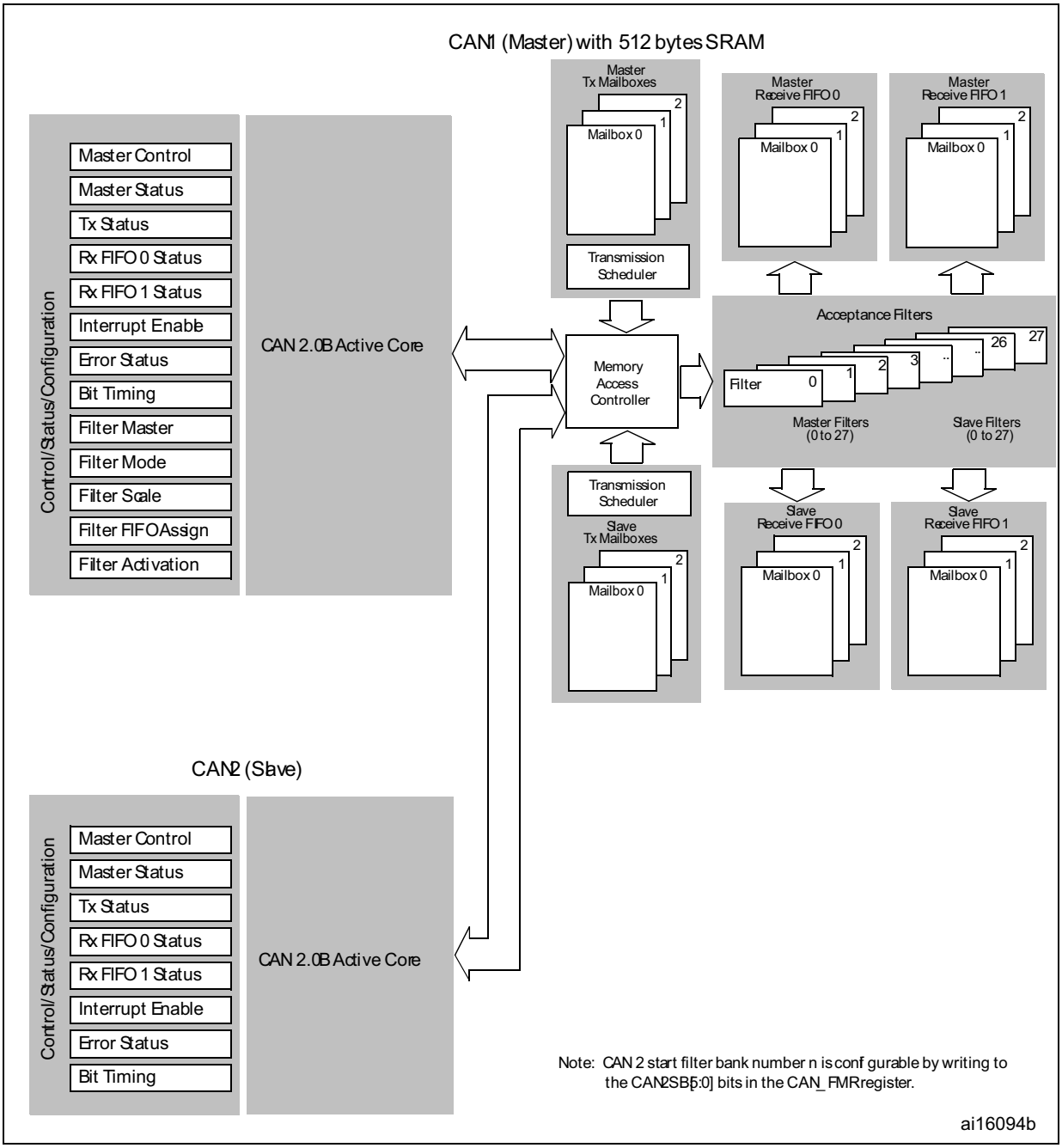

32.4 bxCAN operating modes

bxCAN has three main operating modes: **initialization**, **normal** and **Sleep**. After a hardware reset, bxCAN is in Sleep mode to reduce power consumption and an internal pull-up is active on CANTX. The software requests bxCAN to enter **initialization** or **Sleep** mode by setting the INRQ or SLEEP bits in the CAN_MCR register. Once the mode has been entered, bxCAN confirms it by setting the INAK or SLAK bits in the CAN_MSR register and the internal pull-up is disabled. When neither INAK nor SLAK are set, bxCAN is in **normal**

mode. Before entering **normal** mode bxCAN always has to **synchronize** on the CAN bus. To synchronize, bxCAN waits until the CAN bus is idle, this means 11 consecutive recessive bits have been monitored on CANRX.

32.4.1 Initialization mode

The software initialization can be done while the hardware is in Initialization mode. To enter this mode the software sets the INRQ bit in the CAN_MCR register and waits until the hardware has confirmed the request by setting the INAK bit in the CAN_MSR register.

To leave Initialization mode, the software clears the INQR bit. bxCAN has left Initialization mode once the INAK bit has been cleared by hardware.

While in Initialization Mode, all message transfers to and from the CAN bus are stopped and the status of the CAN bus output CANTX is recessive (high).

Entering Initialization Mode does not change any of the configuration registers.

To initialize the CAN Controller, software has to set up the Bit Timing (CAN_BTR) and CAN options (CAN_MCR) registers.

To initialize the registers associated with the CAN filter banks (mode, scale, FIFO assignment, activation and filter values), software has to set the FINIT bit (CAN_FMR). Filter initialization also can be done outside the initialization mode.

Note: When FINIT=1, CAN reception is deactivated.

The filter values also can be modified by deactivating the associated filter activation bits (in the CAN_FA1R register).

If a filter bank is not used, it is recommended to leave it non active (leave the corresponding FACT bit cleared).

32.4.2 Normal mode

Once the initialization is complete, the software must request the hardware to enter Normal mode to be able to synchronize on the CAN bus and start reception and transmission.

The request to enter Normal mode is issued by clearing the INRQ bit in the CAN_MCR register. The bxCAN enters Normal mode and is ready to take part in bus activities when it has synchronized with the data transfer on the CAN bus. This is done by waiting for the occurrence of a sequence of 11 consecutive recessive bits (Bus Idle state). The switch to Normal mode is confirmed by the hardware by clearing the INAK bit in the CAN_MSR register.

The initialization of the filter values is independent from Initialization Mode but must be done while the filter is not active (corresponding FACTx bit cleared). The filter scale and mode configuration must be configured before entering Normal Mode.

32.4.3 Sleep mode (low power)

To reduce power consumption, bxCAN has a low-power mode called Sleep mode. This mode is entered on software request by setting the SLEEP bit in the CAN_MCR register. In this mode, the bxCAN clock is stopped, however software can still access the bxCAN mailboxes.

If software requests entry to **initialization** mode by setting the INRQ bit while bxCAN is in **Sleep** mode, it must also clear the SLEEP bit.

bxCAN can be woken up (exit Sleep mode) either by software clearing the SLEEP bit or on detection of CAN bus activity.

On CAN bus activity detection, hardware automatically performs the wakeup sequence by clearing the SLEEP bit if the AWUM bit in the CAN_MCR register is set. If the AWUM bit is cleared, software has to clear the SLEEP bit when a wakeup interrupt occurs, in order to exit from Sleep mode.

Note: If the wakeup interrupt is enabled (WKUIE bit set in CAN_IER register) a wakeup interrupt will be generated on detection of CAN bus activity, even if the bxCAN automatically performs the wakeup sequence.

After the SLEEP bit has been cleared, Sleep mode is exited once bxCAN has synchronized with the CAN bus, refer to *Figure 336*. The Sleep mode is exited once the SLAK bit has been cleared by hardware.

Figure 336. bxCAN operating modes

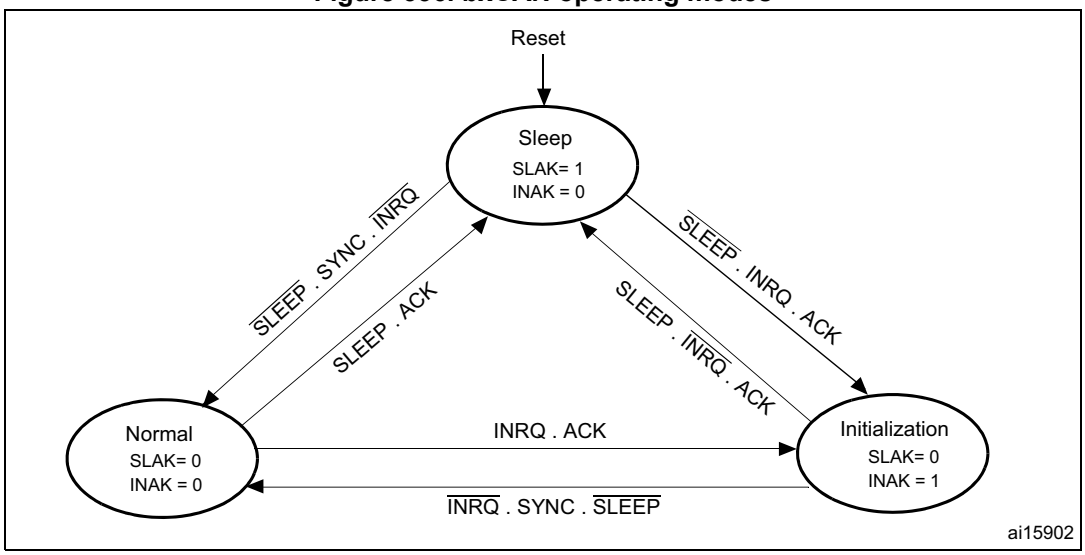

1. ACK = The wait state during which hardware confirms a request by setting the INAK or SLAK bits in the CAN_MSR register
2. SYNC = The state during which bxCAN waits until the CAN bus is idle, meaning 11 consecutive recessive bits have been monitored on CANRX

32.5 Test mode

Test mode can be selected by the SILM and LBKM bits in the CAN_BTR register. These bits must be configured while bxCAN is in Initialization mode. Once test mode has been selected, the INRQ bit in the CAN_MCR register must be reset to enter Normal mode.

32.5.1 Silent mode

The bxCAN can be put in Silent mode by setting the SILM bit in the CAN_BTR register.

In Silent mode, the bxCAN is able to receive valid data frames and valid remote frames, but it sends only recessive bits on the CAN bus and it cannot start a transmission. If the bxCAN has to send a dominant bit (ACK bit, overload flag, active error flag), the bit is rerouted internally so that the CAN Core monitors this dominant bit, although the CAN bus may

remain in recessive state. Silent mode can be used to analyze the traffic on a CAN bus without affecting it by the transmission of dominant bits (Acknowledge Bits, Error Frames).

Figure 337. bxCAN in silent mode

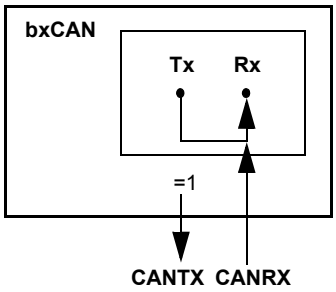

32.5.2 Loop back mode

The bxCAN can be set in Loop Back Mode by setting the LBKM bit in the CAN_BTR register. In Loop Back Mode, the bxCAN treats its own transmitted messages as received messages and stores them (if they pass acceptance filtering) in a Receive mailbox.

Figure 338. bxCAN in loop back mode

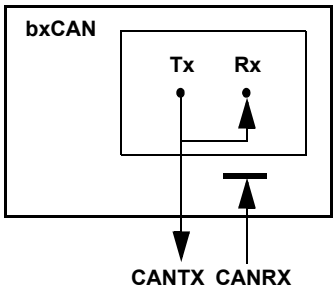

This mode is provided for self-test functions. To be independent of external events, the CAN Core ignores acknowledge errors (no dominant bit sampled in the acknowledge slot of a data / remote frame) in Loop Back Mode. In this mode, the bxCAN performs an internal feedback from its Tx output to its Rx input. The actual value of the CANRX input pin is disregarded by the bxCAN. The transmitted messages can be monitored on the CANTX pin.

32.5.3 Loop back combined with silent mode

It is also possible to combine Loop Back mode and Silent mode by setting the LBKM and SILM bits in the CAN_BTR register. This mode can be used for a “Hot Selftest”, meaning the bxCAN can be tested like in Loop Back mode but without affecting a running CAN system connected to the CANTX and CANRX pins. In this mode, the CANRX pin is disconnected from the bxCAN and the CANTX pin is held recessive.

Figure 339. bxCAN in combined mode

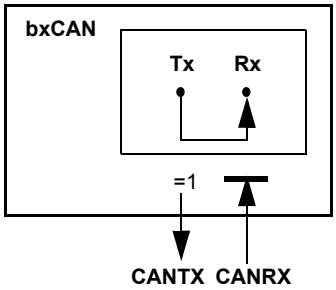

32.6 Debug mode

When the microcontroller enters the debug mode (Cortex®-M4 with FPU core halted), the bxCAN continues to work normally or stops, depending on:

- the DBG_CAN1_STOP bit for CAN1 or the DBG_CAN2_STOP bit for CAN2 in the DBG module. For more details, refer to *Section 38.16.2: Debug support for timers, watchdog, bxCAN and I^2C*.
- the DBF bit in CAN_MCR. For more details, refer to *Section 32.9.2*.

32.7 bxCAN functional description

32.7.1 Transmission handling

In order to transmit a message, the application must select one **empty** transmit mailbox, set up the identifier, the data length code (DLC) and the data before requesting the transmission by setting the corresponding TXRQ bit in the CAN_TIxR register. Once the mailbox has left **empty** state, the software no longer has write access to the mailbox registers. Immediately after the TXRQ bit has been set, the mailbox enters **pending** state and waits to become the highest priority mailbox, see *Transmit Priority*. As soon as the mailbox has the highest priority it will be **scheduled** for transmission. The transmission of the message of the scheduled mailbox will start (enter **transmit** state) when the CAN bus becomes idle. Once the mailbox has been successfully transmitted, it will become **empty** again. The hardware indicates a successful transmission by setting the RQCP and TXOK bits in the CAN_TSR register.

If the transmission fails, the cause is indicated by the ALST bit in the CAN_TSR register in case of an Arbitration Lost, and/or the TERR bit, in case of transmission error detection.

Transmit priority

By identifier	When more than one transmit mailbox is pending, the transmission order is given by the identifier of the message stored in the mailbox. The message with the lowest identifier value has the highest priority according to the arbitration of the CAN protocol. If the identifier values are equal, the lower mailbox number will be scheduled first.
By transmit request order	The transmit mailboxes can be configured as a transmit FIFO by setting the TXFP bit in the CAN_MCR register. In this mode the priority order is given by the transmit request order. This mode is very useful for segmented transmission.

Abort

A transmission request can be aborted by the user setting the ABRQ bit in the CAN_TSR register. In **pending** or **scheduled** state, the mailbox is aborted immediately. An abort request while the mailbox is in **transmit** state can have two results. If the mailbox is transmitted successfully the mailbox becomes **empty** with the TXOK bit set in the CAN_TSR register. If the transmission fails, the mailbox becomes **scheduled,** the transmission is aborted and becomes **empty** with TXOK cleared. In all cases the mailbox will become **empty** again at least at the end of the current transmission.

Nonautomatic retransmission mode

This mode has been implemented in order to fulfil the requirement of the Time Triggered Communication option of the CAN standard. To configure the hardware in this mode the NART bit in the CAN_MCR register must be set.

In this mode, each transmission is started only once. If the first attempt fails, due to an arbitration loss or an error, the hardware will not automatically restart the message transmission.

At the end of the first transmission attempt, the hardware considers the request as completed and sets the RQCP bit in the CAN_TSR register. The result of the transmission is indicated in the CAN_TSR register by the TXOK, ALST and TERR bits.

Figure 340. Transmit mailbox states

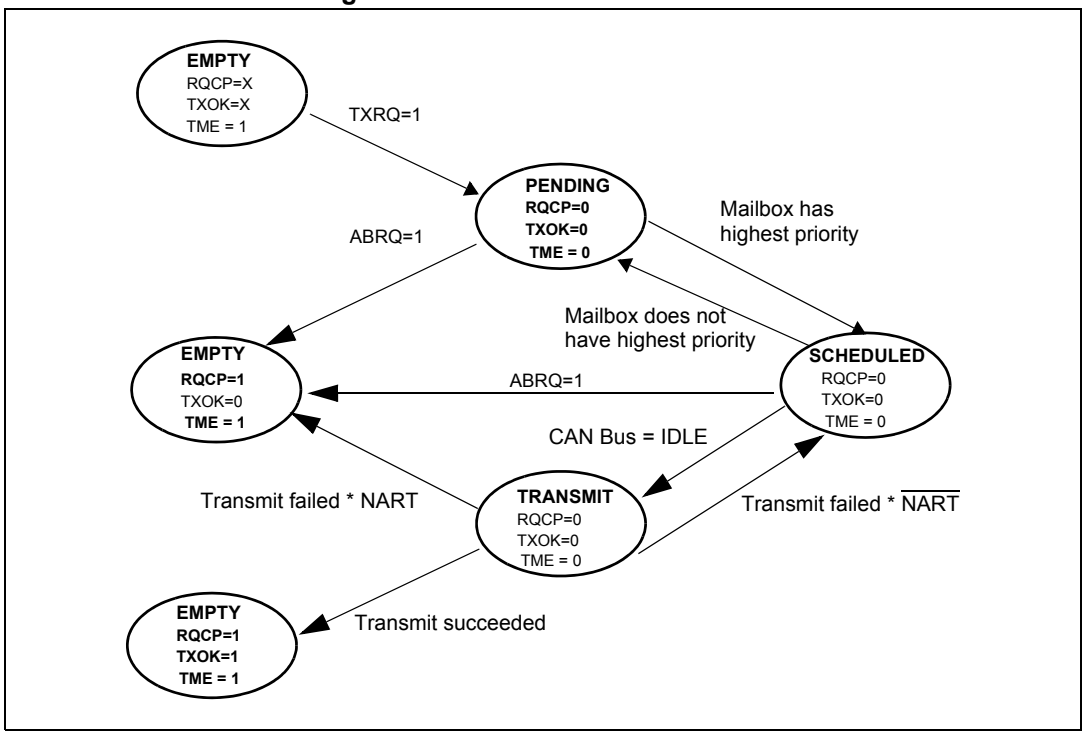

32.7.2 Time triggered communication mode

In this mode, the internal counter of the CAN hardware is activated and used to generate the Time Stamp value stored in the CAN_RDTxR/CAN_TDTxR registers, respectively (for Rx and Tx mailboxes). The internal counter is incremented each CAN bit time (refer to *Section 32.7.7*). The internal counter is captured on the sample point of the Start Of Frame bit in both reception and transmission.

32.7.3 Reception handling

For the reception of CAN messages, three mailboxes organized as a FIFO are provided. In order to save CPU load, simplify the software and guarantee data consistency, the FIFO is managed completely by hardware. The application accesses the messages stored in the FIFO through the FIFO output mailbox.

Valid message

A received message is considered as valid **when** it has been received correctly according to the CAN protocol (no error until the last but one bit of the EOF field) **and** It passed through the identifier filtering successfully, see *Section 32.7.4*.

Figure 341. Receive FIFO states

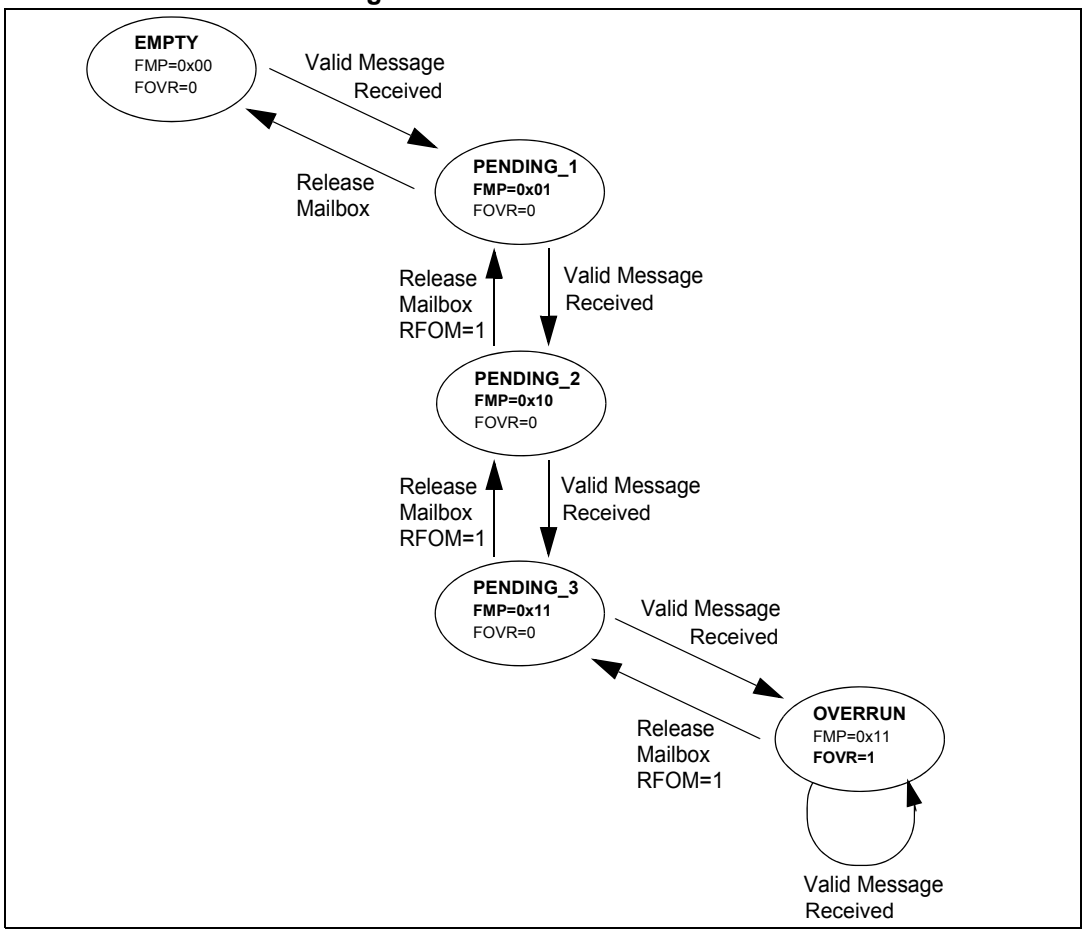

FIFO management

Starting from the **empty** state, the first valid message received is stored in the FIFO which becomes **pending_1**. The hardware signals the event setting the FMP[1:0] bits in the CAN_RFR register to the value 01b. The message is available in the FIFO output mailbox. The software reads out the mailbox content and releases it by setting the RFOM bit in the CAN_RFR register. The FIFO becomes **empty** again. If a new valid message has been received in the meantime, the FIFO stays in **pending_1** state and the new message is available in the output mailbox.

If the application does not release the mailbox, the next valid message will be stored in the FIFO which enters **pending_2** state (FMP[1:0] = 10b). The storage process is repeated for the next valid message putting the FIFO into **pending_3** state (FMP[1:0] = 11b). At this point, the software must release the output mailbox by setting the RFOM bit, so that a mailbox is free to store the next valid message. Otherwise the next valid message received will cause a loss of message.

Refer also to *Section 32.7.5*

Overrun

Once the FIFO is in **pending_3** state (i.e. the three mailboxes are full) the next valid message reception will lead to an **overrun** and a message will be lost. The hardware

signals the overrun condition by setting the FOVR bit in the CAN_RFR register. Which message is lost depends on the configuration of the FIFO:

- If the FIFO lock function is disabled (RFLM bit in the CAN_MCR register cleared) the last message stored in the FIFO will be overwritten by the new incoming message. In this case the latest messages will be always available to the application.
- If the FIFO lock function is enabled (RFLM bit in the CAN_MCR register set) the most recent message will be discarded and the software will have the three oldest messages in the FIFO available.

Reception related interrupts

Once a message has been stored in the FIFO, the FMP[1:0] bits are updated and an interrupt request is generated if the FMPIE bit in the CAN_IER register is set.

When the FIFO becomes full (i.e. a third message is stored) the FULL bit in the CAN_RFR register is set and an interrupt is generated if the FFIE bit in the CAN_IER register is set.

On overrun condition, the FOVR bit is set and an interrupt is generated if the FOVIE bit in the CAN_IER register is set.

32.7.4 Identifier filtering

In the CAN protocol the identifier of a message is not associated with the address of a node but related to the content of the message. Consequently a transmitter broadcasts its message to all receivers. On message reception a receiver node decides - depending on the identifier value - whether the software needs the message or not. If the message is needed, it is copied into the SRAM. If not, the message must be discarded without intervention by the software.

To fulfill this requirement, the bxCAN Controller provides 28 configurable and scalable filter banks (27-0) to the application. This hardware filtering saves CPU resources which would be otherwise needed to perform filtering by software. Each filter bank x consists of two 32-bit registers, CAN_FxR0 and CAN_FxR1.

Scalable width

To optimize and adapt the filters to the application needs, each filter bank can be scaled independently. Depending on the filter scale a filter bank provides:

- One 32-bit filter for the STDID[10:0], EXTID[17:0], IDE and RTR bits.
- Two 16-bit filters for the STDID[10:0], RTR, IDE and EXTID[17:15] bits.

Refer to *Figure 342*.

Furthermore, the filters can be configured in mask mode or in identifier list mode.

Mask mode

In **mask** mode the identifier registers are associated with mask registers specifying which bits of the identifier are handled as “must match” or as “don’t care”.

Identifier list mode

In **identifier list** mode, the mask registers are used as identifier registers. Thus instead of defining an identifier and a mask, two identifiers are specified, doubling the number of single identifiers. All bits of the incoming identifier must match the bits specified in the filter registers.

Filter bank scale and mode configuration

The filter banks are configured by means of the corresponding CAN_FMR register. To configure a filter bank it must be deactivated by clearing the FACT bit in the CAN_FAR register. The filter scale is configured by means of the corresponding FSCx bit in the CAN_FS1R register, refer to *Figure 342*. The **identifier list** or **identifier mask** mode for the corresponding Mask/Identifier registers is configured by means of the FBMx bits in the CAN_FMR register.

To filter a group of identifiers, configure the Mask/Identifier registers in mask mode.

To select single identifiers, configure the Mask/Identifier registers in identifier list mode.

Filters not used by the application should be left deactivated.

Each filter within a filter bank is numbered (called the *Filter Number*) from 0 to a maximum dependent on the mode and the scale of each of the filter banks.

Concerning the filter configuration, refer to *Figure 342*.

Figure 342. Filter bank scale configuration - register organization

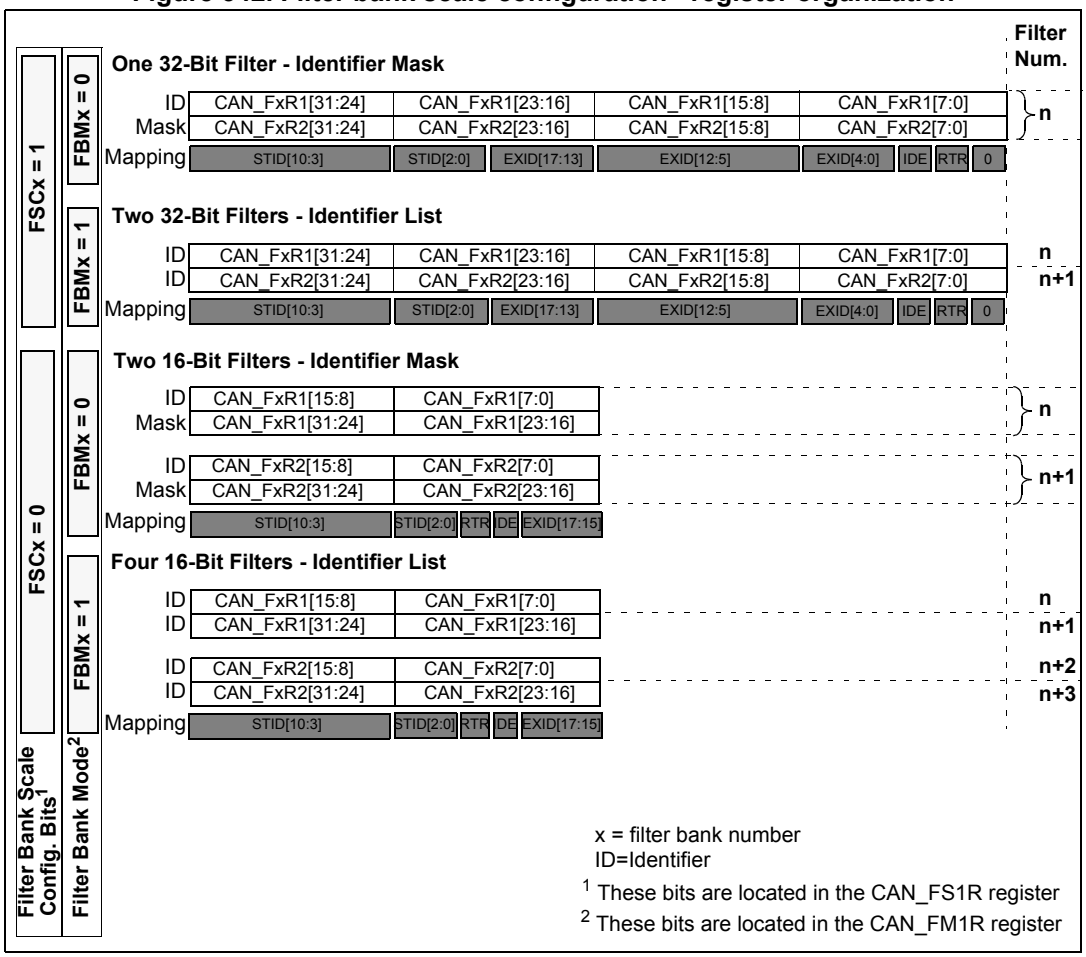

Filter match index

Once a message has been received in the FIFO it is available to the application. Typically, application data is copied into SRAM locations. To copy the data to the right location the

application has to identify the data by means of the identifier. To avoid this, and to ease the access to the SRAM locations, the CAN controller provides a Filter Match Index.

This index is stored in the mailbox together with the message according to the filter priority rules. Thus each received message has its associated filter match index.

The Filter Match index can be used in two ways:

- Compare the Filter Match index with a list of expected values.
- Use the Filter Match Index as an index on an array to access the data destination location.

For nonmasked filters, the software no longer has to compare the identifier.

If the filter is masked the software reduces the comparison to the masked bits only.

The index value of the filter number does not take into account the activation state of the filter banks. In addition, two independent numbering schemes are used, one for each FIFO. Refer to *Figure 343* for an example.

Figure 343. Example of filter numbering

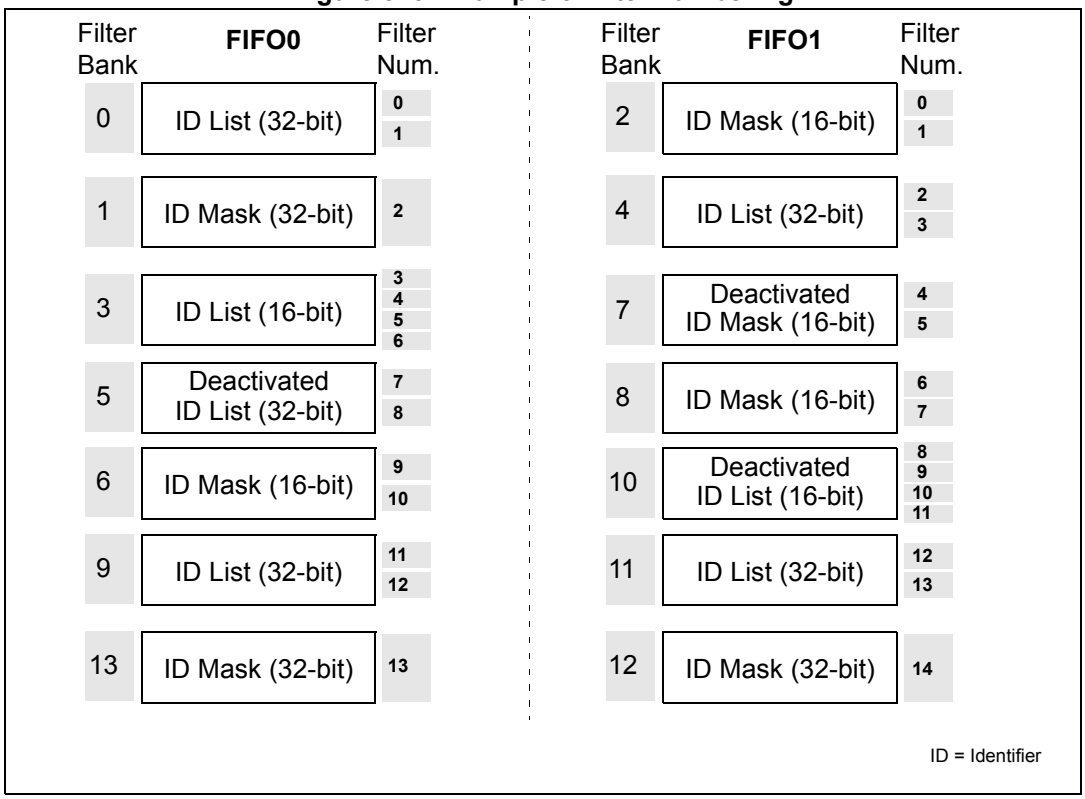

Filter priority rules

Depending on the filter combination it may occur that an identifier passes successfully through several filters. In this case the filter match value stored in the receive mailbox is chosen according to the following priority rules:

- A 32-bit filter takes priority over a 16-bit filter.
- For filters of equal scale, priority is given to the Identifier List mode over the Identifier Mask mode
- For filters of equal scale and mode, priority is given by the filter number (the lower the number, the higher the priority).

Figure 344. Filtering mechanism - Example

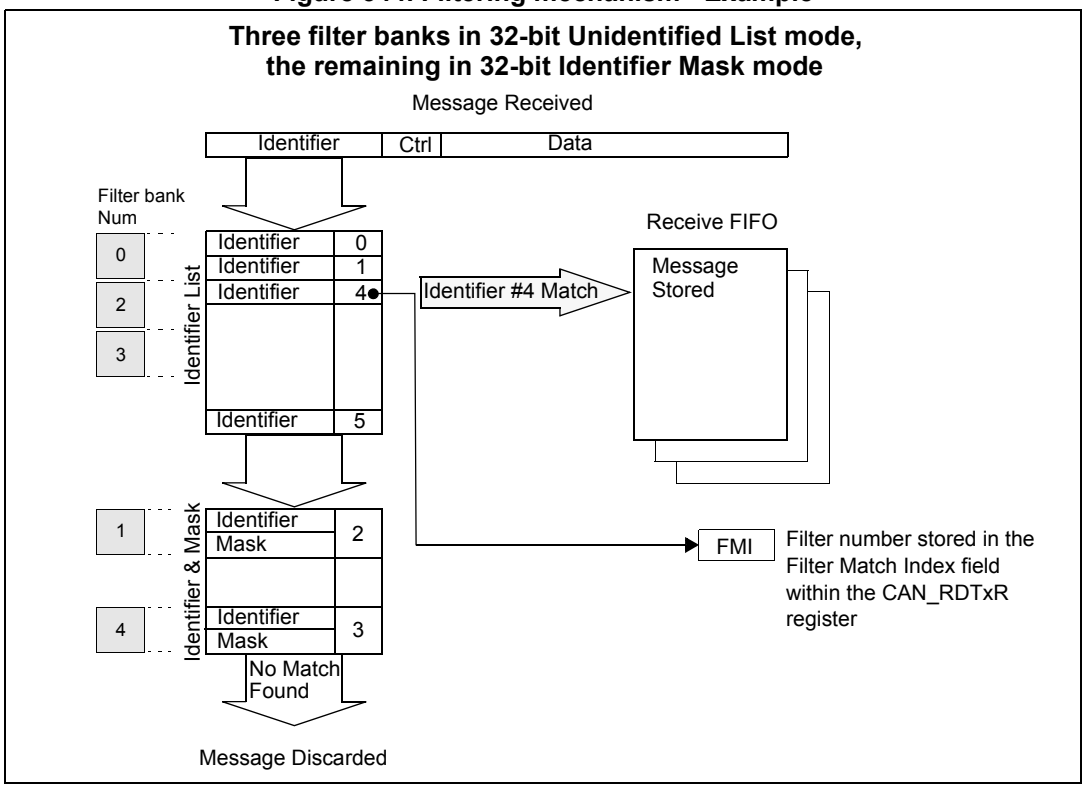

The example above shows the filtering principle of the bxCAN. On reception of a message, the identifier is compared first with the filters configured in identifier list mode. If there is a match, the message is stored in the associated FIFO and the index of the matching filter is stored in the Filter Match Index. As shown in the example, the identifier matches with Identifier #2 thus the message content and FMI 2 is stored in the FIFO.

If there is no match, the incoming identifier is then compared with the filters configured in mask mode.

If the identifier does not match any of the identifiers configured in the filters, the message is discarded by hardware without disturbing the software.

32.7.5 Message storage

The interface between the software and the hardware for the CAN messages is implemented by means of mailboxes. A mailbox contains all information related to a message; identifier, data, control, status and time stamp information.

Transmit mailbox

The software sets up the message to be transmitted in an empty transmit mailbox. The status of the transmission is indicated by hardware in the CAN_TSR register.

Table 182. Transmit mailbox mapping

Offset to transmit mailbox base address (bytes)	Register name
0	CAN_TIxR
4	CAN_TDTxR
8	CAN_TDLxR
12	CAN_TDHxR

Receive mailbox

When a message has been received, it is available to the software in the FIFO output mailbox. Once the software has handled the message (e.g. read it) the software must release the FIFO output mailbox by means of the RFOM bit in the CAN_RFR register to make the next incoming message available. The filter match index is stored in the MFMI field of the CAN_RDTxR register. The 16-bit time stamp value is stored in the TIME[15:0] field of CAN_RDTxR.

Table 183. Receive mailbox mapping

Offset to receive mailbox base address (bytes)	Register name
0	CAN_RIxR
4	CAN_RDTxR
8	CAN_RDLxR
12	CAN_RDHxR

Figure 345. CAN error state diagram

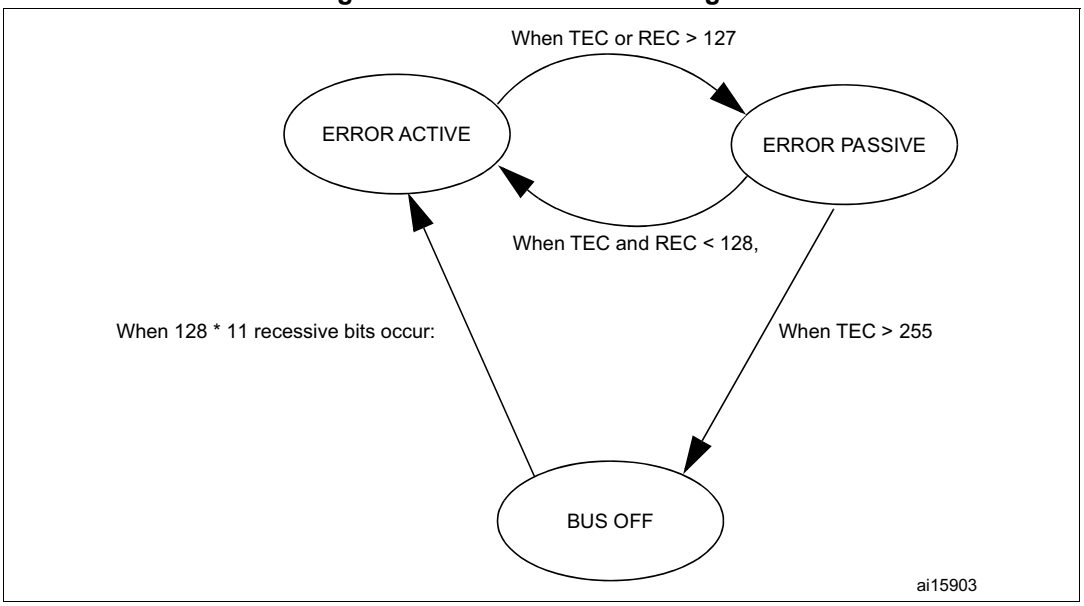

32.7.6 Error management

The error management as described in the CAN protocol is handled entirely by hardware using a Transmit Error Counter (TEC value, in CAN_ESR register) and a Receive Error Counter (REC value, in the CAN_ESR register), which get incremented or decremented according to the error condition. For detailed information about TEC and REC management, refer to the CAN standard.

Both of them may be read by software to determine the stability of the network. Furthermore, the CAN hardware provides detailed information on the current error status in CAN_ESR register. By means of the CAN_IER register (ERRIE bit, etc.), the software can configure the interrupt generation on error detection in a very flexible way.

Bus-Off recovery

The Bus-Off state is reached when TEC is greater than 255, this state is indicated by BOFF bit in CAN_ESR register. In Bus-Off state, the bxCAN is no longer able to transmit and receive messages.

Depending on the ABOM bit in the CAN_MCR register bxCAN will recover from Bus-Off (become error active again) either automatically or on software request. But in both cases the bxCAN has to wait at least for the recovery sequence specified in the CAN standard (128 occurrences of 11 consecutive recessive bits monitored on CANRX).

If ABOM is set, the bxCAN will start the recovering sequence automatically after it has entered Bus-Off state.

If ABOM is cleared, the software must initiate the recovering sequence by requesting bxCAN to enter and to leave initialization mode.

Note: In initialization mode, bxCAN does not monitor the CANRX signal, therefore it cannot complete the recovery sequence. ***To recover, bxCAN must be in normal mode****.*

32.7.7 Bit timing

The bit timing logic monitors the serial bus-line and performs sampling and adjustment of the sample point by synchronizing on the start-bit edge and resynchronizing on the following edges.

Its operation may be explained simply by splitting nominal bit time into three segments as follows:

- **Synchronization segment (SYNC_SEG)**: a bit change is expected to occur within this time segment. It has a fixed length of one time quantum (1 x t_q).
- **Bit segment 1 (BS1)**: defines the location of the sample point. It includes the PROP_SEG and PHASE_SEG1 of the CAN standard. Its duration is programmable between 1 and 16 time quanta but may be automatically lengthened to compensate for positive phase drifts due to differences in the frequency of the various nodes of the network.
- **Bit segment 2 (BS2)**: defines the location of the transmit point. It represents the PHASE_SEG2 of the CAN standard. Its duration is programmable between 1 and 8 time quanta but may also be automatically shortened to compensate for negative phase drifts.

The resynchronization Jump Width (SJW) defines an upper bound to the amount of lengthening or shortening of the bit segments. It is programmable between 1 and 4 time quanta.

A valid edge is defined as the first transition in a bit time from dominant to recessive bus level provided the controller itself does not send a recessive bit.

If a valid edge is detected in BS1 instead of SYNC_SEG, BS1 is extended by up to SJW so that the sample point is delayed.

Conversely, if a valid edge is detected in BS2 instead of SYNC_SEG, BS2 is shortened by up to SJW so that the transmit point is moved earlier.

As a safeguard against programming errors, the configuration of the Bit Timing Register (CAN_BTR) is only possible while the device is in Standby mode.

Note: For a detailed description of the CAN bit timing and resynchronization mechanism, refer to the ISO 11898 standard.

Figure 346. Bit timing

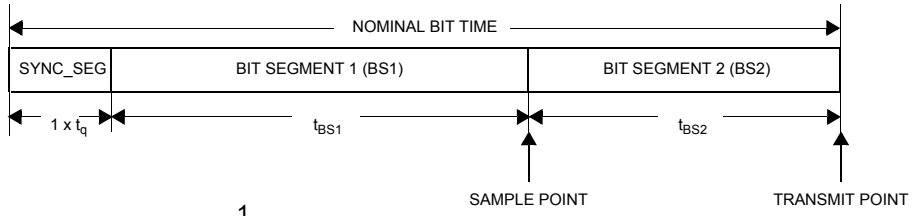

$$\text{BaudRate} = \frac{1}{\text{NominalBitTime}}$$

$$\text{NominalBitTime} = 1 \times t_q + t_{BS1} + t_{BS2}$$

with:

$t_{BS1} = t_q$ x (TS1[3:0] + 1),

$t_{BS2} = t_q$ x (TS2[2:0] + 1),

t_q = (BRP[9:0] + 1) x t_{PCLK}

where t_q refers to the Time quantum

t_{PCLK} = time period of the APB clock,

BRP[9:0], TS1[3:0] and TS2[2:0] are defined in the CAN_BTR Register.

Figure 347. CAN frames

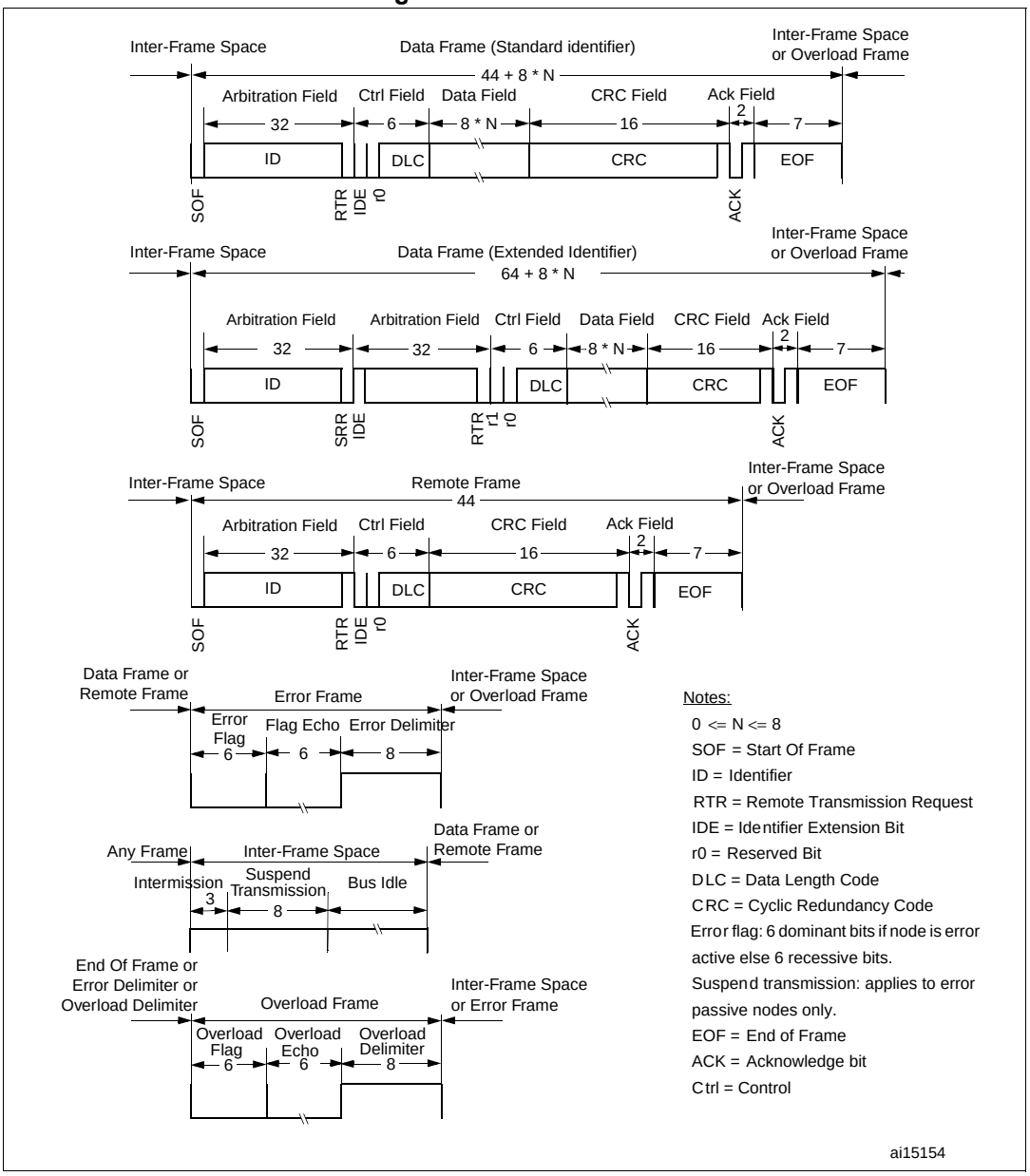

32.8 bxCAN interrupts

Four interrupt vectors are dedicated to bxCAN. Each interrupt source can be independently enabled or disabled by means of the CAN Interrupt Enable Register (CAN_IER).

Figure 348. Event flags and interrupt generation

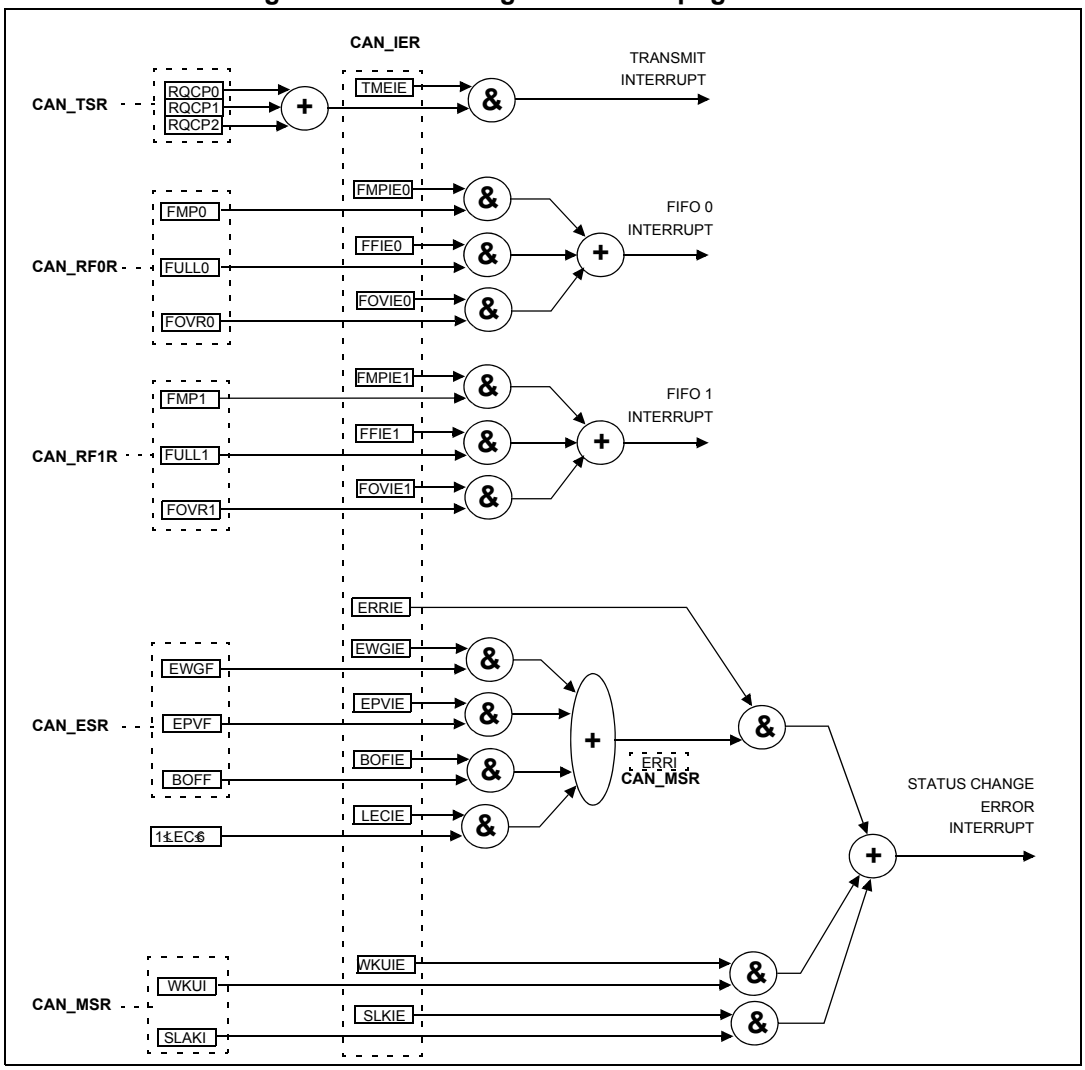

- The **transmit interrupt** can be generated by the following events:
  - Transmit mailbox 0 becomes empty, RQCP0 bit in the CAN_TSR register set.
  - Transmit mailbox 1 becomes empty, RQCP1 bit in the CAN_TSR register set.
  - Transmit mailbox 2 becomes empty, RQCP2 bit in the CAN_TSR register set.
- The **FIFO 0 interrupt** can be generated by the following events:
  - Reception of a new message, FMP0 bits in the CAN_RF0R register are not ‘00’.
  - FIFO0 full condition, FULL0 bit in the CAN_RF0R register set.
  - FIFO0 overrun condition, FOVR0 bit in the CAN_RF0R register set.
- The **FIFO 1 interrupt** can be generated by the following events:
  - Reception of a new message, FMP1 bits in the CAN_RF1R register are not ‘00’.
  - FIFO1 full condition, FULL1 bit in the CAN_RF1R register set.
  - FIFO1 overrun condition, FOVR1 bit in the CAN_RF1R register set.
- The **error and status change interrupt** can be generated by the following events:
  - Error condition, for more details on error conditions refer to the CAN Error Status register (CAN_ESR).

– Wakeup condition, SOF monitored on the CAN Rx signal.
– Entry into Sleep mode.

32.9 CAN registers

The peripheral registers have to be accessed by words (32 bits).

32.9.1 Register access protection

Erroneous access to certain configuration registers can cause the hardware to temporarily disturb the whole CAN network. Therefore the CAN_BTR register can be modified by software only while the CAN hardware is in initialization mode.

Although the transmission of incorrect data will not cause problems at the CAN network level, it can severely disturb the application. A transmit mailbox can be only modified by software while it is in empty state, refer to *Figure 340*.

The filter values can be modified either deactivating the associated filter banks or by setting the FINIT bit. Moreover, the modification of the filter configuration (scale, mode and FIFO assignment) in CAN_FMxR, CAN_FSxR and CAN_FFAR registers can only be done when the filter initialization mode is set (FINIT=1) in the CAN_FMR register.

32.9.2 CAN control and status registers

Refer to *Section 1.1* for a list of abbreviations used in register descriptions.

CAN master control register (CAN_MCR)

Address offset: 0x00
Reset value: 0x0001 0002

31	30	29	28	27	26	25	24	23	22	21	20	19	18	17	16
Reserved															DBF
															rw

15	14	13	12	11	10	9	8	7	6	5	4	3	2	1	0
RESET	Reserved							TTCM	ABOM	AWUM	NART	RFLM	TXFP	SLEEP	INRQ
rs								rw	rw	rw	rw	rw	rw	rw	rw

Bits 31:17 Reserved, must be kept at reset value.

Bit 16 **DBF:** Debug freeze
0: CAN working during debug
1: CAN reception/transmission frozen during debug. Reception FIFOs can still be accessed/controlled normally.

Bit 15 **RESET:** bxCAN software master reset
0: Normal operation.
1: Force a master reset of the bxCAN -> Sleep mode activated after reset (FMP bits and CAN_MCR register are initialized to the reset values). This bit is automatically reset to 0.

Bits 14:8 Reserved, must be kept at reset value.

Bit 7 **TTCM**: Time triggered communication mode

0: Time Triggered Communication mode disabled.
1: Time Triggered Communication mode enabled

Note: For more information on Time Triggered Communication mode refer to Section 32.7.2.

Bit 6 **ABOM:** Automatic bus-off management

This bit controls the behavior of the CAN hardware on leaving the Bus-Off state.
0: The Bus-Off state is left on software request, once 128 occurrences of 11 recessive bits have been monitored and the software has first set and cleared the INRQ bit of the CAN_MCR register.
1: The Bus-Off state is left automatically by hardware once 128 occurrences of 11 recessive bits have been monitored.
For detailed information on the Bus-Off state refer to *Section 32.7.6*.

Bit 5 **AWUM**: Automatic wakeup mode

This bit controls the behavior of the CAN hardware on message reception during Sleep mode.
0: The Sleep mode is left on software request by clearing the SLEEP bit of the CAN_MCR register.
1: The Sleep mode is left automatically by hardware on CAN message detection.
The SLEEP bit of the CAN_MCR register and the SLAK bit of the CAN_MSR register are cleared by hardware.

Bit 4 **NART**: No automatic retransmission

0: The CAN hardware will automatically retransmit the message until it has been successfully transmitted according to the CAN standard.
1: A message will be transmitted only once, independently of the transmission result (successful, error or arbitration lost).

Bit 3 **RFLM**: Receive FIFO locked mode

0: Receive FIFO not locked on overrun. Once a receive FIFO is full the next incoming message will overwrite the previous one.
1: Receive FIFO locked against overrun. Once a receive FIFO is full the next incoming message will be discarded.

Bit 2 **TXFP**: Transmit FIFO priority

This bit controls the transmission order when several mailboxes are pending at the same time.
0: Priority driven by the identifier of the message
1: Priority driven by the request order (chronologically)

Bit 1 **SLEEP**: Sleep mode request

This bit is set by software to request the CAN hardware to enter the Sleep mode. Sleep mode will be entered as soon as the current CAN activity (transmission or reception of a CAN frame) has been completed.
This bit is cleared by software to exit Sleep mode.
This bit is cleared by hardware when the AWUM bit is set and a SOF bit is detected on the CAN Rx signal.
This bit is set after reset - CAN starts in Sleep mode.

Bit 0 **INRQ**: Initialization request

The software clears this bit to switch the hardware into normal mode. Once 11 consecutive recessive bits have been monitored on the Rx signal the CAN hardware is synchronized and ready for transmission and reception. Hardware signals this event by clearing the INAK bit in the CAN_MSR register.

Software sets this bit to request the CAN hardware to enter initialization mode. Once software has set the INRQ bit, the CAN hardware waits until the current CAN activity (transmission or reception) is completed before entering the initialization mode. Hardware signals this event by setting the INAK bit in the CAN_MSR register.

CAN master status register (CAN_MSR)

Address offset: 0x04
Reset value: 0x0000 0C02

31	30	29	28	27	26	25	24	23	22	21	20	19	18	17	16
Reserved															
15	14	13	12	11	10	9	8	7	6	5	4	3	2	1	0
Reserved.				RX	SAMP	RXM	TXM	Reserved			SLAKI	WKUI	ERRI	SLAK	INAK
				r	r	r	r				rc_w1	rc_w1	rc_w1	r	r

Bits 31:12 Reserved, must be kept at reset value.

Bit 11 **RX**: CAN Rx signal

Monitors the actual value of the **CAN_RX** Pin.

Bit 10 **SAMP**: Last sample point

The value of RX on the last sample point (current received bit value).

Bit 9 **RXM**: Receive mode

The CAN hardware is currently receiver.

Bit 8 **TXM**: Transmit mode

The CAN hardware is currently transmitter.

Bits 7:5 Reserved, must be kept at reset value.

Bit 4 **SLAKI**: Sleep acknowledge interrupt

When SLKIE=1, this bit is set by hardware to signal that the bxCAN has entered Sleep Mode. When set, this bit generates a status change interrupt if the SLKIE bit in the CAN_IER register is set.

This bit is cleared by software or by hardware, when SLAK is cleared.

Note: When SLKIE=0, no polling on SLAKI is possible. In this case the SLAK bit can be polled.

Bit 3 **WKUI**: Wakeup interrupt

This bit is set by hardware to signal that a SOF bit has been detected while the CAN hardware was in Sleep mode. Setting this bit generates a status change interrupt if the WKUIE bit in the CAN_IER register is set.

This bit is cleared by software.

Bit 2 **ERRI**: Error interrupt

This bit is set by hardware when a bit of the CAN_ESR has been set on error detection and the corresponding interrupt in the CAN_IER is enabled. Setting this bit generates a status change interrupt if the ERRIE bit in the CAN_IER register is set.
This bit is cleared by software.

Bit 1 **SLAK**: Sleep acknowledge

This bit is set by hardware and indicates to the software that the CAN hardware is now in Sleep mode. This bit acknowledges the Sleep mode request from the software (set SLEEP bit in CAN_MCR register).
This bit is cleared by hardware when the CAN hardware has left Sleep mode (to be synchronized on the CAN bus). To be synchronized the hardware has to monitor a sequence of 11 consecutive recessive bits on the CAN RX signal.

Note: The process of leaving Sleep mode is triggered when the SLEEP bit in the CAN_MCR register is cleared. Refer to the AWUM bit of the CAN_MCR register description for detailed information for clearing SLEEP bit

Bit 0 **INAK**: Initialization acknowledge

This bit is set by hardware and indicates to the software that the CAN hardware is now in initialization mode. This bit acknowledges the initialization request from the software (set INRQ bit in CAN_MCR register).
This bit is cleared by hardware when the CAN hardware has left the initialization mode (to be synchronized on the CAN bus). To be synchronized the hardware has to monitor a sequence of 11 consecutive recessive bits on the CAN RX signal.

CAN transmit status register (CAN_TSR)

Address offset: 0x08
Reset value: 0x1C00 0000

31	30	29	28	27	26	25	24	23	22	21	20	19	18	17	16
LOW2	LOW1	LOW0	TME2	TME1	TME0	CODE[1:0]		ABRQ2	Reserved			TERR2	ALST2	TXOK2	RQCP2
r	r	r	r	r	r	r	r	rs				rc_w1	rc_w1	rc_w1	rc_w1

15	14	13	12	11	10	9	8	7	6	5	4	3	2	1	0
ABRQ1	Reserved Res.			TERR1	ALST1	TXOK1	RQCP1	ABRQ0	Reserved			TERR0	ALST0	TXOK0	RQCP0
rs				rc_w1	rc_w1	rc_w1	rc_w1	rs				rc_w1	rc_w1	rc_w1	rc_w1

Bit 31 **LOW2**: Lowest priority flag for mailbox 2

This bit is set by hardware when more than one mailbox are pending for transmission and mailbox 2 has the lowest priority.

Bit 30 **LOW1**: Lowest priority flag for mailbox 1

This bit is set by hardware when more than one mailbox are pending for transmission and mailbox 1 has the lowest priority.

Bit 29 **LOW0**: Lowest priority flag for mailbox 0

This bit is set by hardware when more than one mailbox are pending for transmission and mailbox 0 has the lowest priority.

Note: The LOW[2:0] bits are set to zero when only one mailbox is pending.

Bit 28 **TME2**: Transmit mailbox 2 empty

This bit is set by hardware when no transmit request is pending for mailbox 2.

Bit 27 **TME1**: Transmit mailbox 1 empty

This bit is set by hardware when no transmit request is pending for mailbox 1.

Bit 26 **TME0**: Transmit mailbox 0 empty

This bit is set by hardware when no transmit request is pending for mailbox 0.

Bits 25:24 **CODE[1:0]**: Mailbox code

In case at least one transmit mailbox is free, the code value is equal to the number of the next transmit mailbox free.
In case all transmit mailboxes are pending, the code value is equal to the number of the transmit mailbox with the lowest priority.

Bit 23 **ABRQ2**: Abort request for mailbox 2

Set by software to abort the transmission request for the corresponding mailbox.
Cleared by hardware when the mailbox becomes empty.
Setting this bit has no effect when the mailbox is not pending for transmission.

Bits 22:20 Reserved, must be kept at reset value.

Bit 19 **TERR2**: Transmission error of mailbox 2

This bit is set when the previous TX failed due to an error.

Bit 18 **ALST2**: Arbitration lost for mailbox 2

This bit is set when the previous TX failed due to an arbitration lost.

Bit 17 **TXOK2**: Transmission OK of mailbox 2

The hardware updates this bit after each transmission attempt.
0: The previous transmission failed
1: The previous transmission was successful
This bit is set by hardware when the transmission request on mailbox 2 has been completed successfully. Refer to *Figure 340*.

Bit 16 **RQCP2**: Request completed mailbox2

Set by hardware when the last request (transmit or abort) has been performed.
Cleared by software writing a “1” or by hardware on transmission request (TXRQ2 set in CAN_TMID2R register).
Clearing this bit clears all the status bits (TXOK2, ALST2 and TERR2) for Mailbox 2.

Bit 15 **ABRQ1**: Abort request for mailbox 1

Set by software to abort the transmission request for the corresponding mailbox.
Cleared by hardware when the mailbox becomes empty.
Setting this bit has no effect when the mailbox is not pending for transmission.

Bits 14:12 Reserved, must be kept at reset value.

Bit 11 **TERR1**: Transmission error of mailbox1

This bit is set when the previous TX failed due to an error.

Bit 10 **ALST1**: Arbitration lost for mailbox1

This bit is set when the previous TX failed due to an arbitration lost.

Bit 9 **TXOK1**: Transmission OK of mailbox1

The hardware updates this bit after each transmission attempt.
0: The previous transmission failed
1: The previous transmission was successful
This bit is set by hardware when the transmission request on mailbox 1 has been completed successfully. Refer to *Figure 340*

Bit 8 **RQCP1**: Request completed mailbox1

Set by hardware when the last request (transmit or abort) has been performed.
Cleared by software writing a “1” or by hardware on transmission request (TXRQ1 set in CAN_TI1R register).
Clearing this bit clears all the status bits (TXOK1, ALST1 and TERR1) for Mailbox 1.

Bit 7 **ABRQ0**: Abort request for mailbox0
Set by software to abort the transmission request for the corresponding mailbox.
Cleared by hardware when the mailbox becomes empty.
Setting this bit has no effect when the mailbox is not pending for transmission.

Bits 6:4 Reserved, must be kept at reset value.

Bit 3 **TERR0**: Transmission error of mailbox0
This bit is set when the previous TX failed due to an error.

Bit 2 **ALST0**: Arbitration lost for mailbox0
This bit is set when the previous TX failed due to an arbitration lost.

Bit 1 **TXOK0**: Transmission OK of mailbox0
The hardware updates this bit after each transmission attempt.
0: The previous transmission failed
1: The previous transmission was successful
This bit is set by hardware when the transmission request on mailbox 1 has been completed successfully. Refer to *Figure 340*

Bit 0 **RQCP0**: Request completed mailbox0
Set by hardware when the last request (transmit or abort) has been performed.
Cleared by software writing a “1” or by hardware on transmission request (TXRQ0 set in CAN_TI0R register).
Clearing this bit clears all the status bits (TXOK0, ALST0 and TERR0) for Mailbox 0.

CAN receive FIFO 0 register (CAN_RF0R)

Address offset: 0x0C
Reset value: 0x0000 0000

31	30	29	28	27	26	25	24	23	22	21	20	19	18	17	16
Reserved															
15	14	13	12	11	10	9	8	7	6	5	4	3	2	1	0
Reserved										RFOM0	FOVR0	FULL0	Res.	FMP0[1:0]	
										rs	rc_w1	rc_w1		r	r

Bits 31:6 Reserved, must be kept at reset value.

Bit 5 **RFOM0**: Release FIFO 0 output mailbox
Set by software to release the output mailbox of the FIFO. The output mailbox can only be released when at least one message is pending in the FIFO. Setting this bit when the FIFO is empty has no effect. If at least two messages are pending in the FIFO, the software has to release the output mailbox to access the next message.
Cleared by hardware when the output mailbox has been released.

Bit 4 **FOVR0**: FIFO 0 overrun
This bit is set by hardware when a new message has been received and passed the filter while the FIFO was full.
This bit is cleared by software.

Bit 3 **FULL0**: FIFO 0 full
Set by hardware when three messages are stored in the FIFO.
This bit is cleared by software.

Bit 2 Reserved, must be kept at reset value.

Bits 1:0 **FMP0[1:0]**: FIFO 0 message pending

These bits indicate how many messages are pending in the receive FIFO.
FMP is increased each time the hardware stores a new message in to the FIFO. FMP is decreased each time the software releases the output mailbox by setting the RFOM0 bit.

CAN receive FIFO 1 register (CAN_RF1R)

Address offset: 0x10
Reset value: 0x0000 0000

31	30	29	28	27	26	25	24	23	22	21	20	19	18	17	16
Reserved															
15	14	13	12	11	10	9	8	7	6	5	4	3	2	1	0
Reserved										RFOM1	FOVR1	FULL1	Res.	FMP1[1:0]	
										rs	rc_w1	rc_w1		r	r

Bits 31:6 Reserved, must be kept at reset value.

Bit 5 **RFOM1**: Release FIFO 1 output mailbox

Set by software to release the output mailbox of the FIFO. The output mailbox can only be released when at least one message is pending in the FIFO. Setting this bit when the FIFO is empty has no effect. If at least two messages are pending in the FIFO, the software has to release the output mailbox to access the next message.
Cleared by hardware when the output mailbox has been released.

Bit 4 **FOVR1**: FIFO 1 overrun

This bit is set by hardware when a new message has been received and passed the filter while the FIFO was full.
This bit is cleared by software.

Bit 3 **FULL1**: FIFO 1 full

Set by hardware when three messages are stored in the FIFO.
This bit is cleared by software.

Bit 2 Reserved, must be kept at reset value.

Bits 1:0 **FMP1[1:0]**: FIFO 1 message pending

These bits indicate how many messages are pending in the receive FIFO1.
FMP1 is increased each time the hardware stores a new message in to the FIFO1. FMP is decreased each time the software releases the output mailbox by setting the RFOM1 bit.

CAN interrupt enable register (CAN_IER)

Address offset: 0x14
Reset value: 0x0000 0000

31	30	29	28	27	26	25	24	23	22	21	20	19	18	17	16
Reserved														SLKIE	WKUIE
														rw	rw
15	14	13	12	11	10	9	8	7	6	5	4	3	2	1	0
ERRIE	Reserved			LEC IE	BOF IE	EPV IE	EWG IE	Res.	FOV IE1	FF IE1	FMP IE1	FOV IE0	FF IE0	FMP IE0	TME IE
rw				rw	rw	rw	rw		rw	rw	rw	rw	rw	rw	rw

Bits 31:18 Reserved, must be kept at reset value.

Bit 17 **SLKIE**: Sleep interrupt enable
0: No interrupt when SLAKI bit is set.
1: Interrupt generated when SLAKI bit is set.

Bit 16 **WKUIE**: Wakeup interrupt enable
0: No interrupt when WKUI is set.
1: Interrupt generated when WKUI bit is set.

Bit 15 **ERRIE**: Error interrupt enable
0: No interrupt will be generated when an error condition is pending in the CAN_ESR.
1: An interrupt will be generation when an error condition is pending in the CAN_ESR.

Bits 14:12 Reserved, must be kept at reset value.

Bit 11 **LECIE**: Last error code interrupt enable
0: ERRI bit will not be set when the error code in LEC[2:0] is set by hardware on error detection.
1: ERRI bit will be set when the error code in LEC[2:0] is set by hardware on error detection.

Bit 10 **BOFIE**: Bus-off interrupt enable
0: ERRI bit will not be set when BOFF is set.
1: ERRI bit will be set when BOFF is set.

Bit 9 **EPVIE**: Error passive interrupt enable
0: ERRI bit will not be set when EPVF is set.
1: ERRI bit will be set when EPVF is set.

Bit 8 **EWGIE**: Error warning interrupt enable
0: ERRI bit will not be set when EWGF is set.
1: ERRI bit will be set when EWGF is set.

Bit 7 Reserved, must be kept at reset value.

Bit 6 **FOVIE1**: FIFO overrun interrupt enable
0: No interrupt when FOVR is set.
1: Interrupt generation when FOVR is set.

Bit 5 **FFIE1**: FIFO full interrupt enable
0: No interrupt when FULL bit is set.
1: Interrupt generated when FULL bit is set.

Bit 4 **FMPIE1**: FIFO message pending interrupt enable
0: No interrupt generated when state of FMP[1:0] bits are not 00b.
1: Interrupt generated when state of FMP[1:0] bits are not 00b.

Bit 3 **FOVIE0**: FIFO overrun interrupt enable
0: No interrupt when FOVR bit is set.
1: Interrupt generated when FOVR bit is set.

Bit 2 **FFIE0**: FIFO full interrupt enable
0: No interrupt when FULL bit is set.
1: Interrupt generated when FULL bit is set.

Bit 1 **FMPIE0**: FIFO message pending interrupt enable
0: No interrupt generated when state of FMP[1:0] bits are not 00b.
1: Interrupt generated when state of FMP[1:0] bits are not 00b.

Bit 0 **TMEIE**: Transmit mailbox empty interrupt enable
0: No interrupt when RQCPx bit is set.
1: Interrupt generated when RQCPx bit is set.

Note: Refer to Section 32.8: bxCAN interrupts.

CAN error status register (CAN_ESR)

Address offset: 0x18
Reset value: 0x0000 0000

31	30	29	28	27	26	25	24	23	22	21	20	19	18	17	16
REC[7:0]									TEC[7:0]						
r	r	r	r	r	r	r	r	r	r	r	r	r	r	r	r

15	14	13	12	11	10	9	8	7	6	5	4	3	2	1	0
Reserved									LEC[2:0]			Res.	BOFF	EPVF	EWGF
									rw	rw	rw		r	r	r

Bits 31:24 **REC[7:0]**: Receive error counter
The implementing part of the fault confinement mechanism of the CAN protocol. In case of an error during reception, this counter is incremented by 1 or by 8 depending on the error condition as defined by the CAN standard. After every successful reception the counter is decremented by 1 or reset to 120 if its value was higher than 128. When the counter value exceeds 127, the CAN controller enters the error passive state.

Bits 23:16 **TEC[7:0]**: Least significant byte of the 9-bit transmit error counter
The implementing part of the fault confinement mechanism of the CAN protocol.

Bits 15:7 Reserved, must be kept at reset value.

Bits 6:4 **LEC[2:0]**: Last error code
This field is set by hardware and holds a code which indicates the error condition of the last error detected on the CAN bus. If a message has been transferred (reception or transmission) without error, this field will be cleared to ‘0’.
The LEC[2:0] bits can be set to value 0b111 by software. They are updated by hardware to indicate the current communication status.
000: No Error
001: Stuff Error
010: Form Error
011: Acknowledgment Error
100: Bit recessive Error
101: Bit dominant Error
110: CRC Error
111: Set by software

Bit 3 Reserved, must be kept at reset value.

Bit 2 **BOFF**: Bus-off flag

This bit is set by hardware when it enters the bus-off state. The bus-off state is entered on TEC overflow, greater than 255, refer to *Section 32.7.6*.

Bit 1 **EPVF**: Error passive flag

This bit is set by hardware when the Error Passive limit has been reached (Receive Error Counter or Transmit Error Counter>127).

Bit 0 **EWGF**: Error warning flag

This bit is set by hardware when the warning limit has been reached (Receive Error Counter or Transmit Error Counter≥96).

CAN bit timing register (CAN_BTR)

Address offset: 0x1C
Reset value: 0x0123 0000

This register can only be accessed by the software when the CAN hardware is in initialization mode.

31	30	29	28	27	26	25	24	23	22	21	20	19	18	17	16
SILM	LBKM	Reserved				SJW[1:0]		Res.	TS2[2:0]			TS1[3:0]			
rw	rw					rw	rw		rw	rw	rw	rw	rw	rw	rw

15	14	13	12	11	10	9	8	7	6	5	4	3	2	1	0
Reserved						BRP[9:0]									
						rw	rw	rw	rw	rw	rw	rw	rw	rw	rw

Bit 31 **SILM**: Silent mode (debug)

0: Normal operation
1: Silent Mode

Bit 30 **LBKM**: Loop back mode (debug)

0: Loop Back Mode disabled
1: Loop Back Mode enabled

Bits 29:26 Reserved, must be kept at reset value.

Bits 25:24 **SJW[1:0]**: Resynchronization jump width

These bits define the maximum number of time quanta the CAN hardware is allowed to lengthen or shorten a bit to perform the resynchronization.

$t_{RJW} = t_q$ x (SJW[1:0] + 1)

Bit 23 Reserved, must be kept at reset value.

Bits 22:20 **TS2[2:0]**: Time segment 2

These bits define the number of time quanta in Time Segment 2.

$t_{BS2} = t_q$ x (TS2[2:0] + 1)

Bits 19:16 **TS1[3:0]**: Time segment 1

These bits define the number of time quanta in Time Segment 1

$t_{BS1} = t_q \times (TS1[3:0] + 1)$

For more information on bit timing refer to *Section 32.7.7*.

Bits 15:10 Reserved, must be kept at reset value.

Bits 9:0 **BRP[9:0]**: Baud rate prescaler

These bits define the length of a time quanta.

$t_q = (BRP[9:0]+1) \times t_{PCLK}$

32.9.3 CAN mailbox registers

This chapter describes the registers of the transmit and receive mailboxes. Refer to *Section 32.7.5: Message storage* for detailed register mapping.

Transmit and receive mailboxes have the same registers except:

- The FMI field in the CAN_RDTxR register.
- A receive mailbox is always write protected.
- A transmit mailbox is write-enabled only while empty, corresponding TME bit in the CAN_TSR register set.

There are three TX Mailboxes and two RX Mailboxes , as shown in *Figure 349*. Each RX Mailbox allows access to a 3-level depth FIFO, the access being offered only to the oldest received message in the FIFO. Each mailbox consist of four registers.

Figure 349. RX and TX mailboxes

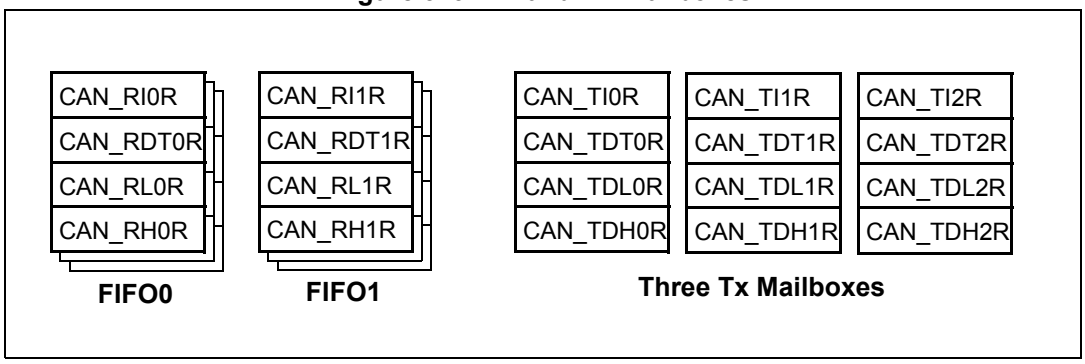

CAN TX mailbox identifier register (CAN_TIxR) (x=0..2)

Address offsets: 0x180, 0x190, 0x1A0
Reset value: 0xXXXX XXXX (except bit 0, TXRQ = 0)

All TX registers are write protected when the mailbox is pending transmission (TMEx reset).

This register also implements the TX request control (bit 0) - reset value 0.

31	30	29	28	27	26	25	24	23	22	21	20	19	18	17	16
STID[10:0]/EXID[28:18]											EXID[17:13]				
rw	rw	rw	rw	rw	rw	rw	rw	rw	rw	rw	rw	rw	rw	rw	rw
15	14	13	12	11	10	9	8	7	6	5	4	3	2	1	0
EXID[12:0]													IDE	RTR	TXRQ
rw	rw	rw	rw	rw	rw	rw	rw	rw	rw	rw	rw	rw	rw	rw	rw

Bits 31:21 **STID[10:0]/EXID[28:18]**: Standard identifier or extended identifier
The standard identifier or the MSBs of the extended identifier (depending on the IDE bit value).

Bits 20:3 **EXID[17:0]**: Extended identifier
The LSBs of the extended identifier.

Bit 2 **IDE**: Identifier extension
This bit defines the identifier type of message in the mailbox.
0: Standard identifier.
1: Extended identifier.

Bit 1 **RTR**: Remote transmission request
0: Data frame
1: Remote frame

Bit 0 **TXRQ**: Transmit mailbox request
Set by software to request the transmission for the corresponding mailbox.
Cleared by hardware when the mailbox becomes empty.

CAN mailbox data length control and time stamp register (CAN_TDTxR) (x=0..2)

All bits of this register are write protected when the mailbox is not in empty state.

Address offsets: 0x184, 0x194, 0x1A4
Reset value: 0xXXXX XXXX

31	30	29	28	27	26	25	24	23	22	21	20	19	18	17	16
TIME[15:0]															
rw	rw	rw	rw	rw	rw	rw	rw	rw	rw	rw	rw	rw	rw	rw	rw

15	14	13	12	11	10	9	8	7	6	5	4	3	2	1	0
Reserved							TGT	Reserved				DLC[3:0]			
							rw					rw	rw	rw	rw

Bits 31:16 **TIME[15:0]**: Message time stamp
This field contains the 16-bit timer value captured at the SOF transmission.

Bits 15:9 Reserved, must be kept at reset value.

Bit 8 **TGT**: Transmit global time
This bit is active only when the hardware is in the Time Trigger Communication mode, TTCM bit of the CAN_MCR register is set.
0: Time stamp TIME[15:0] is not sent.
1: Time stamp TIME[15:0] value is sent in the last two data bytes of the 8-byte message: TIME[7:0] in data byte 7 and TIME[15:8] in data byte 6, replacing the data written in CAN_TDHxR[31:16] register (DATA6[7:0] and DATA7[7:0]). DLC must be programmed as 8 in order these two bytes to be sent over the CAN bus.

Bits 7:4 Reserved, must be kept at reset value.

Bits 3:0 **DLC[3:0]**: Data length code
This field defines the number of data bytes a data frame contains or a remote frame request. A message can contain from 0 to 8 data bytes, depending on the value in the DLC field.

CAN mailbox data low register (CAN_TDLxR) (x=0..2)

All bits of this register are write protected when the mailbox is not in empty state.

Address offsets: 0x188, 0x198, 0x1A8
Reset value: 0xXXXX XXXX

31	30	29	28	27	26	25	24	23	22	21	20	19	18	17	16
DATA3[7:0]								DATA2[7:0]							
rw	rw	rw	rw	rw	rw	rw	rw	rw	rw	rw	rw	rw	rw	rw	rw
15	14	13	12	11	10	9	8	7	6	5	4	3	2	1	0
DATA1[7:0]								DATA0[7:0]							
rw	rw	rw	rw	rw	rw	rw	rw	rw	rw	rw	rw	rw	rw	rw	rw

Bits 31:24 **DATA3[7:0]**: Data byte 3
Data byte 3 of the message.

Bits 23:16 **DATA2[7:0]**: Data byte 2
Data byte 2 of the message.

Bits 15:8 **DATA1[7:0]**: Data byte 1
Data byte 1 of the message.

Bits 7:0 **DATA0[7:0]**: Data byte 0
Data byte 0 of the message.
A message can contain from 0 to 8 data bytes and starts with byte 0.

CAN mailbox data high register (CAN_TDHxR) (x=0..2)

All bits of this register are write protected when the mailbox is not in empty state.

Address offsets: 0x18C, 0x19C, 0x1AC
Reset value: 0xXXXX XXXX

31	30	29	28	27	26	25	24	23	22	21	20	19	18	17	16
DATA7[7:0]								DATA6[7:0]							
rw	rw	rw	rw	rw	rw	rw	rw	rw	rw	rw	rw	rw	rw	rw	rw
15	14	13	12	11	10	9	8	7	6	5	4	3	2	1	0
DATA5[7:0]								DATA4[7:0]							
rw	rw	rw	rw	rw	rw	rw	rw	rw	rw	rw	rw	rw	rw	rw	rw

Bits 31:24 **DATA7[7:0]**: Data byte 7
Data byte 7 of the message.
Note: If TGT of this message and TTCM are active, DATA7 and DATA6 will be replaced by the TIME stamp value.

Bits 23:16 **DATA6[7:0]**: Data byte 6
Data byte 6 of the message.

Bits 15:8 **DATA5[7:0]**: Data byte 5
Data byte 5 of the message.

Bits 7:0 **DATA4[7:0]**: Data byte 4
Data byte 4 of the message.

CAN receive FIFO mailbox identifier register (CAN_RIxR) (x=0..1)

Address offsets: 0x1B0, 0x1C0
Reset value: 0xXXXX XXXX

All RX registers are write protected.

31	30	29	28	27	26	25	24	23	22	21	20	19	18	17	16
STID[10:0]/EXID[28:18]											EXID[17:13]				
r	r	r	r	r	r	r	r	r	r	r	r	r	r	r	r

15	14	13	12	11	10	9	8	7	6	5	4	3	2	1	0
EXID[12:0]													IDE	RTR	Res.
r	r	r	r	r	r	r	r	r	r	r	r	r	r	r	

Bits 31:21 **STID[10:0]/EXID[28:18]**: Standard identifier or extended identifier

The standard identifier or the MSBs of the extended identifier (depending on the IDE bit value).

Bits 20:3 **EXID[17:0]**: Extended identifier

The LSBs of the extended identifier.

Bit 2 **IDE**: Identifier extension

This bit defines the identifier type of message in the mailbox.
0: Standard identifier.
1: Extended identifier.

Bit 1 **RTR**: Remote transmission request

0: Data frame
1: Remote frame

Bit 0 Reserved, must be kept at reset value.

CAN receive FIFO mailbox data length control and time stamp register (CAN_RDTxR) (x=0..1)

Address offsets: 0x1B4, 0x1C4
Reset value: 0xXXXX XXXX

All RX registers are write protected.

31	30	29	28	27	26	25	24	23	22	21	20	19	18	17	16
TIME[15:0]															
r	r	r	r	r	r	r	r	r	r	r	r	r	r	r	r
15	14	13	12	11	10	9	8	7	6	5	4	3	2	1	0
FMI[7:0]								Reserved				DLC[3:0]			
r	r	r	r	r	r	r	r					r	r	r	r

Bits 31:16 **TIME[15:0]**: Message time stamp
This field contains the 16-bit timer value captured at the SOF detection.

Bits 15:8 **FMI[7:0]**: Filter match index
This register contains the index of the filter the message stored in the mailbox passed through. For more details on identifier filtering refer to *Section 32.7.4*

Bits 7:4 Reserved, must be kept at reset value.

Bits 3:0 **DLC[3:0]**: Data length code
This field defines the number of data bytes a data frame contains (0 to 8). It is 0 in the case of a remote frame request.

CAN receive FIFO mailbox data low register (CAN_RDLxR) (x=0..1)

All bits of this register are write protected when the mailbox is not in empty state.

Address offsets: 0x1B8, 0x1C8
Reset value: 0xXXXX XXXX

All RX registers are write protected.

31	30	29	28	27	26	25	24	23	22	21	20	19	18	17	16
DATA3[7:0]								DATA2[7:0]							
r	r	r	r	r	r	r	r	r	r	r	r	r	r	r	r
15	14	13	12	11	10	9	8	7	6	5	4	3	2	1	0
DATA1[7:0]								DATA0[7:0]							
r	r	r	r	r	r	r	r	r	r	r	r	r	r	r	r

Bits 31:24 **DATA3[7:0]**: Data Byte 3
Data byte 3 of the message.

Bits 23:16 **DATA2[7:0]**: Data Byte 2
Data byte 2 of the message.

Bits 15:8 **DATA1[7:0]**: Data Byte 1
Data byte 1 of the message.

Bits 7:0 **DATA0[7:0]**: Data Byte 0
Data byte 0 of the message.
A message can contain from 0 to 8 data bytes and starts with byte 0.

CAN receive FIFO mailbox data high register (CAN_RDHxR) (x=0..1)

Address offsets: 0x1BC, 0x1CC
Reset value: 0xXXXX XXXX

All RX registers are write protected.

31	30	29	28	27	26	25	24	23	22	21	20	19	18	17	16
DATA7[7:0]								DATA6[7:0]							
r	r	r	r	r	r	r	r	r	r	r	r	r	r	r	r
15	14	13	12	11	10	9	8	7	6	5	4	3	2	1	0
DATA5[7:0]								DATA4[7:0]							
r	r	r	r	r	r	r	r	r	r	r	r	r	r	r	r

Bits 31:24 **DATA7[7:0]**: Data Byte 7
Data byte 3 of the message.

Bits 23:16 **DATA6[7:0]**: Data Byte 6
Data byte 2 of the message.

Bits 15:8 **DATA5[7:0]**: Data Byte 5
Data byte 1 of the message.

Bits 7:0 **DATA4[7:0]**: Data Byte 4
Data byte 0 of the message.

32.9.4 CAN filter registers

CAN filter master register (CAN_FMR)

Address offset: 0x200
Reset value: 0x2A1C 0E01

All bits of this register are set and cleared by software.

31	30	29	28	27	26	25	24	23	22	21	20	19	18	17	16
Reserved															
15	14	13	12	11	10	9	8	7	6	5	4	3	2	1	0
Reserved		CAN2SB[5:0]						Reserved							FINIT
		rw	rw	rw	rw	rw	rw								rw

Bits 31:14 Reserved, must be kept at reset value.

Bits 13:8 **CAN2SB[5:0]**: CAN2 start bank
These bits are set and cleared by software. They define the start bank for the CAN2 interface (Slave) in the range 0 to 27.
Note: When CAN2SB[5:0] = 28d, all the filters to CAN1 can be used.
When CAN2SB[5:0] is set to 0, no filters are assigned to CAN1.

Bits 7:1 Reserved, must be kept at reset value.

Bit 0 **FINIT**: Filter init mode
Initialization mode for filter banks
0: Active filters mode.
1: Initialization mode for the filters.

CAN filter mode register (CAN_FM1R)

Address offset: 0x204
Reset value: 0x0000 0000

This register can be written only when the filter initialization mode is set (FINIT=1) in the CAN_FMR register.

31	30	29	28	27	26	25	24	23	22	21	20	19	18	17	16
Reserved				FBM27	FBM26	FBM25	FBM24	FBM23	FBM22	FBM21	FBM20	FBM19	FBM18	FBM17	FBM16
				rw	rw	rw	rw	rw	rw	rw	rw	rw	rw	rw	rw
15	14	13	12	11	10	9	8	7	6	5	4	3	2	1	0
FBM15	FBM14	FBM13	FBM12	FBM11	FBM10	FBM9	FBM8	FBM7	FBM6	FBM5	FBM4	FBM3	FBM2	FBM1	FBM0
rw	rw	rw	rw	rw	rw	rw	rw	rw	rw	rw	rw	rw	rw	rw	rw

Note: Refer to Figure 342.

Bits 31:28 Reserved, must be kept at reset value.

Bits 27:0 **FBM*x***: Filter mode
Mode of the registers of Filter x.
0: Two 32-bit registers of filter bank x are in Identifier Mask mode.
1: Two 32-bit registers of filter bank x are in Identifier List mode.

CAN filter scale register (CAN_FS1R)

Address offset: 0x20C
Reset value: 0x0000 0000

This register can be written only when the filter initialization mode is set (FINIT=1) in the CAN_FMR register.

31	30	29	28	27	26	25	24	23	22	21	20	19	18	17	16
Reserved				FSC27	FSC26	FSC25	FSC24	FSC23	FSC22	FSC21	FSC20	FSC19	FSC18	FSC17	FSC16
				rw	rw	rw	rw	rw	rw	rw	rw	rw	rw	rw	rw
15	14	13	12	11	10	9	8	7	6	5	4	3	2	1	0
FSC15	FSC14	FSC13	FSC12	FSC11	FSC10	FSC9	FSC8	FSC7	FSC6	FSC5	FSC4	FSC3	FSC2	FSC1	FSC0
rw	rw	rw	rw	rw	rw	rw	rw	rw	rw	rw	rw	rw	rw	rw	rw

Bits 31:28 Reserved, must be kept at reset value.

Bits 27:0 **FSCx**: Filter scale configuration
These bits define the scale configuration of Filters 13-0.
0: Dual 16-bit scale configuration
1: Single 32-bit scale configuration

Note: Refer to Figure 342.

CAN filter FIFO assignment register (CAN_FFA1R)

Address offset: 0x214
Reset value: 0x0000 0000

This register can be written only when the filter initialization mode is set (FINIT=1) in the CAN_FMR register.

31	30	29	28	27	26	25	24	23	22	21	20	19	18	17	16
Reserved				FFA27	FFA26	FFA25	FFA24	FFA23	FFA22	FFA21	FFA20	FFA19	FFA18	FFA17	FFA16
				rw	rw	rw	rw	rw	rw	rw	rw	rw	rw	rw	rw
15	14	13	12	11	10	9	8	7	6	5	4	3	2	1	0
FFA15	FFA14	FFA13	FFA12	FFA11	FFA10	FFA9	FFA8	FFA7	FFA6	FFA5	FFA4	FFA3	FFA2	FFA1	FFA0
rw	rw	rw	rw	rw	rw	rw	rw	rw	rw	rw	rw	rw	rw	rw	rw

Bits 31:28 Reserved, must be kept at reset value.

Bits 27:0 **FFA*x***: Filter FIFO assignment for filter x
The message passing through this filter will be stored in the specified FIFO.
0: Filter assigned to FIFO 0
1: Filter assigned to FIFO 1

CAN filter activation register (CAN_FA1R)

Address offset: 0x21C
Reset value: 0x0000 0000

31	30	29	28	27	26	25	24	23	22	21	20	19	18	17	16
Reserved				FACT27	FACT26	FACT25	FACT24	FACT23	FACT22	FACT21	FACT20	FACT19	FACT18	FACT17	FACT16
				rw	rw	rw	rw	rw	rw	rw	rw	rw	rw	rw	rw
15	14	13	12	11	10	9	8	7	6	5	4	3	2	1	0
FACT15	FACT14	FACT13	FACT12	FACT11	FACT10	FACT9	FACT8	FACT7	FACT6	FACT5	FACT4	FACT3	FACT2	FACT1	FACT0
rw	rw	rw	rw	rw	rw	rw	rw	rw	rw	rw	rw	rw	rw	rw	rw

Bits 31:28 Reserved, must be kept at reset value.

Bits 27:0 **FACT*x***: Filter active
The software sets this bit to activate Filter x. To modify the Filter x registers (CAN_FxR[0:7]), the FACTx bit must be cleared or the FINIT bit of the CAN_FMR register must be set.
0: Filter x is not active
1: Filter x is active

Filter bank i register x (CAN_FiRx) (i=0..27, x=1, 2)

Address offsets: 0x240..0x31C
Reset value: 0xXXXX XXXX

There are 28 filter banks, i=0 .. 27. Each filter bank i is composed of two 32-bit registers, CAN_FiR[2:1].

This register can only be modified when the FACTx bit of the CAN_FAxR register is cleared or when the FINIT bit of the CAN_FMR register is set.

31	30	29	28	27	26	25	24	23	22	21	20	19	18	17	16
FB31	FB30	FB29	FB28	FB27	FB26	FB25	FB24	FB23	FB22	FB21	FB20	FB19	FB18	FB17	FB16
rw	rw	rw	rw	rw	rw	rw	rw	rw	rw	rw	rw	rw	rw	rw	rw
15	14	13	12	11	10	9	8	7	6	5	4	3	2	1	0
FB15	FB14	FB13	FB12	FB11	FB10	FB9	FB8	FB7	FB6	FB5	FB4	FB3	FB2	FB1	FB0
rw	rw	rw	rw	rw	rw	rw	rw	rw	rw	rw	rw	rw	rw	rw	rw

In all configurations:

Bits 31:0 **FB[31:0]**: Filter bits

Identifier
Each bit of the register specifies the level of the corresponding bit of the expected identifier.
0: Dominant bit is expected
1: Recessive bit is expected

Mask
Each bit of the register specifies whether the bit of the associated identifier register must match with the corresponding bit of the expected identifier or not.
0: Don’t care, the bit is not used for the comparison
1: Must match, the bit of the incoming identifier must have the same level has specified in the corresponding identifier register of the filter.

Note: Depending on the scale and mode configuration of the filter the function of each register can differ. For the filter mapping, functions description and mask registers association, refer to Section 32.7.4.

A Mask/Identifier register in **mask mode** has the same bit mapping as in **identifier list** mode.

For the register mapping/addresses of the filter banks refer to Table 184.

32.9.5 bxCAN register map

Refer to *Section 2.3: Memory map* for the register boundary addresses. The registers from offset 0x200 to 31C are present only in CAN1.

Table 184. bxCAN register map and reset values

Offset	Register	31	30	29	28	27	26	25	24	23	22	21	20	19	18	17	16	15	14	13	12	11	10	9	8	7	6	5	4	3	2	1	0
0x000	CAN_MCR	Reserved															DBF	RESET	Reserved							TTCM	ABOM	AWUM	NART	RFLM	TXFP	SLEEP	INRQ
	Reset value																1	0								0	0	0	0	0	0	1	0
0x004	CAN_MSR	Reserved																				RX	SAMP	RXM	TXM	Res.			SLAKI	WKUI	ERRI	SLAK	INAK
	Reset value																					1	1	0	0				0	0	0	1	0
0x008	CAN_TSR	LOW[2:0]			TME[2:0]			CODE[1:0]		ABRQ2	Res.			TERR2	ALST2	TXOK2	RQCP2	ABRQ1	Res.			TERR1	ALST1	TXOK1	RQCP1	ABRQ0	Res..			TERR0	ALST0	TXOK0	RQCP0
	Reset value	0	0	0	1	1	1	0	0	0				0	0	0	0	0				0	0	0	0	0				0	0	0	0
0x00C	CAN_RF0R	Reserved																										RFOM0	FOVR0	FULL0	Reserved	FMP0[1:0]	
	Reset value																											0	0	0		0	0
0x010	CAN_RF1R	Reserved																										RFOM1	FOVR1	FULL1	Reserved	FMP1[1:0]	
	Reset value																											0	0	0		0	0
0x014	CAN_IER	Reserved														SLKIE	WKUIE	ERRIE	Res.			LECIE	BOFIE	EPVIE	EWGIE	Reserved	FOVIE1	FFIE1	FMPIE1	FOVIE0	FFIE0	FMPIE0	TMEIE
	Reset value															0	0	0				0	0	0	0		0	0	0	0	0	0	0
0x018	CAN_ESR	REC[7:0]								TEC[7:0]								Reserved									LEC[2:0]			Reserved	BOFF	EPVF	EWGF
	Reset value	0	0	0	0	0	0	0	0	0	0	0	0	0	0	0	0										0	0	0		0	0	0
0x01C	CAN_BTR	SILM	LBKM	Reserved				SJW[1:0]		Reserved	TS2[2:0]			TS1[3:0]				Reserved						BRP[9:0]									
	Reset value	0	0					0	0		0	1	0	0	0	1	1							0	0	0	0	0	0	0	0	0	0
0x020-0x17F	Reserved																																
0x180	CAN_TI0R	STID[10:0]/EXID[28:18]											EXID[17:0]																		IDE	RTR	TXRQ
	Reset value	x	x	x	x	x	x	x	x	x	x	x	x	x	x	x	x	x	x	x	x	x	x	x	x	x	x	x	x	x	x	x	0
0x184	CAN_TDT0R	TIME[15:0]																Reserved							TGT	Reserved				DLC[3:0]			
	Reset value	x	x	x	x	x	x	x	x	x	x	x	x	x	x	x	x								x					x	x	x	x
0x188	CAN_TDL0R	DATA3[7:0]								DATA2[7:0]								DATA1[7:0]								DATA0[7:0]							
	Reset value	x	x	x	x	x	x	x	x	x	x	x	x	x	x	x	x	x	x	x	x	x	x	x	x	x	x	x	x	x	x	x	x

Table 184. bxCAN register map and reset values (continued)

Offset	Register	31	30	29	28	27	26	25	24	23	22	21	20	19	18	17	16	15	14	13	12	11	10	9	8	7	6	5	4	3	2	1	0
0x18C	CAN_TDH0R	DATA7[7:0]								DATA6[7:0]								DATA5[7:0]								DATA4[7:0]							
	Reset value	x	x	x	x	x	x	x	x	x	x	x	x	x	x	x	x	x	x	x	x	x	x	x	x	x	x	x	x	x	x	x	x
0x190	CAN_TI1R	STID[10:0]/EXID[28:18]											EXID[17:0]																		IDE	RTR	TXRQ
	Reset value	x	x	x	x	x	x	x	x	x	x	x	x	x	x	x	x	x	x	x	x	x	x	x	x	x	x	x	x	x	x	x	0
0x194	CAN_TDT1R	TIME[15:0]																Reserved							TGT	Reserved					DLC[3:0]		
	Reset value	x	x	x	x	x	x	x	x	x	x	x	x	x	x	x	x								x					x	x	x	x
0x198	CAN_TDL1R	DATA3[7:0]								DATA2[7:0]								DATA1[7:0]								DATA0[7:0]							
	Reset value	x	x	x	x	x	x	x	x	x	x	x	x	x	x	x	x	x	x	x	x	x	x	x	x	x	x	x	x	x	x	x	x
0x19C	CAN_TDH1R	DATA7[7:0]								DATA6[7:0]								DATA5[7:0]								DATA4[7:0]							
	Reset value	x	x	x	x	x	x	x	x	x	x	x	x	x	x	x	x	x	x	x	x	x	x	x	x	x	x	x	x	x	x	x	x
0x1A0	CAN_TI2R	STID[10:0]/EXID[28:18]											EXID[17:0]																		IDE	RTR	TXRQ
	Reset value	x	x	x	x	x	x	x	x	x	x	x	x	x	x	x	x	x	x	x	x	x	x	x	x	x	x	x	x	x	x	x	0
0x1A4	CAN_TDT2R	TIME[15:0]																Reserved							TGT	Reserved					DLC[3:0]		
	Reset value	x	x	x	x	x	x	x	x	x	x	x	x	x	x	x	x								x					x	x	x	x
0x1A8	CAN_TDL2R	DATA3[7:0]								DATA2[7:0]								DATA1[7:0]								DATA0[7:0]							
	Reset value	x	x	x	x	x	x	x	x	x	x	x	x	x	x	x	x	x	x	x	x	x	x	x	x	x	x	x	x	x	x	x	x
0x1AC	CAN_TDH2R	DATA7[7:0]								DATA6[7:0]								DATA5[7:0]								DATA4[7:0]							
	Reset value	x	x	x	x	x	x	x	x	x	x	x	x	x	x	x	x	x	x	x	x	x	x	x	x	x	x	x	x	x	x	x	x
0x1B0	CAN_RI0R	STID[10:0]/EXID[28:18]											EXID[17:0]																		IDE	RTR	Reserved
	Reset value	x	x	x	x	x	x	x	x	x	x	x	x	x	x	x	x	x	x	x	x	x	x	x	x	x	x	x	x	x	x	x	
0x1B4	CAN_RDT0R	TIME[15:0]																FMI[7:0]								Reserved					DLC[3:0]		
	Reset value	x	x	x	x	x	x	x	x	x	x	x	x	x	x	x	x	x	x	x	x	x	x	x	x					x	x	x	x
0x1B8	CAN_RDL0R	DATA3[7:0]								DATA2[7:0]								DATA1[7:0]								DATA0[7:0]							
	Reset value	x	x	x	x	x	x	x	x	x	x	x	x	x	x	x	x	x	x	x	x	x	x	x	x	x	x	x	x	x	x	x	x
0x1BC	CAN_RDH0R	DATA7[7:0]								DATA6[7:0]								DATA5[7:0]								DATA4[7:0]							
	Reset value	x	x	x	x	x	x	x	x	x	x	x	x	x	x	x	x	x	x	x	x	x	x	x	x	x	x	x	x	x	x	x	x
0x1C0	CAN_RI1R	STID[10:0]/EXID[28:18]											EXID[17:0]																		IDE	RTR	Reserved
	Reset value	x	x	x	x	x	x	x	x	x	x	x	x	x	x	x	x	x	x	x	x	x	x	x	x	x	x	x	x	x	x	x	

Table 184. bxCAN register map and reset values (continued)

Offset	Register	31	30	29	28	27	26	25	24	23	22	21	20	19	18	17	16	15	14	13	12	11	10	9	8	7	6	5	4	3	2	1	0
0x1C4	CAN_RDT1R	TIME[15:0]																FMI[7:0]								Reserved				DLC[3:0]			
	Reset value	x	x	x	x	x	x	x	x	x	x	x	x	x	x	x	x	x	x	x	x	x	x	x	x					x	x	x	x
0x1C8	CAN_RDL1R	DATA3[7:0]								DATA2[7:0]								DATA1[7:0]								DATA0[7:0]							
	Reset value	x	x	x	x	x	x	x	x	x	x	x	x	x	x	x	x	x	x	x	x	x	x	x	x	x	x	x	x	x	x	x	x
0x1CC	CAN_RDH1R	DATA7[7:0]								DATA6[7:0]								DATA5[7:0]								DATA4[7:0]							
	Reset value	x	x	x	x	x	x	x	x	x	x	x	x	x	x	x	x	x	x	x	x	x	x	x	x	x	x	x	x	x	x	x	x
0x1D0-0x1FF	Reserved																																
0x200	CAN_FMR	Reserved																		CAN2SB[5:0]						Reserved							FINIT
	Reset value																			0	0	1	1	1	0								1
0x204	CAN_FM1R	Reserved				FBM[27:0]																											
	Reset value					0	0	0	0	0	0	0	0	0	0	0	0	0	0	0	0	0	0	0	0	0	0	0	0	0	0	0	0
0x208	Reserved																																
0x20C	CAN_FS1R	Reserved				FSC[27:0]																											
	Reset value					0	0	0	0	0	0	0	0	0	0	0	0	0	0	0	0	0	0	0	0	0	0	0	0	0	0	0	0
0x210	Reserved																																
0x214	CAN_FFA1R	Reserved				FFA[27:0]																											
	Reset value					0	0	0	0	0	0	0	0	0	0	0	0	0	0	0	0	0	0	0	0	0	0	0	0	0	0	0	0
0x218	Reserved																																
0x21C	CAN_FA1R	Reserved				FACT[27:0]																											
	Reset value					0	0	0	0	0	0	0	0	0	0	0	0	0	0	0	0	0	0	0	0	0	0	0	0	0	0	0	0
0x220	Reserved																																
0x224-0x23F	Reserved																																
0x240	CAN_F0R1	FB[31:0]																															
	Reset value	x	x	x	x	x	x	x	x	x	x	x	x	x	x	x	x	x	x	x	x	x	x	x	x	x	x	x	x	x	x	x	x
0x244	CAN_F0R2	FB[31:0]																															
	Reset value	x	x	x	x	x	x	x	x	x	x	x	x	x	x	x	x	x	x	x	x	x	x	x	x	x	x	x	x	x	x	x	x
0x248	CAN_F1R1	FB[31:0]																															
	Reset value	x	x	x	x	x	x	x	x	x	x	x	x	x	x	x	x	x	x	x	x	x	x	x	x	x	x	x	x	x	x	x	x

Table 184. bxCAN register map and reset values (continued)

Offset	Register	31	30	29	28	27	26	25	24	23	22	21	20	19	18	17	16	15	14	13	12	11	10	9	8	7	6	5	4	3	2	1	0
0x24C	CAN_F1R2	FB[31:0]																															
	Reset value	x	x	x	x	x	x	x	x	x	x	x	x	x	x	x	x	x	x	x	x	x	x	x	x	x	x	x	x	x	x	x	x
. . . .	. . . .	. . . .																															
0x318	CAN_F27R1	FB[31:0]																															
	Reset value	x	x	x	x	x	x	x	x	x	x	x	x	x	x	x	x	x	x	x	x	x	x	x	x	x	x	x	x	x	x	x	x
0x31C	CAN_F27R2	FB[31:0]																															
	Reset value	x	x	x	x	x	x	x	x	x	x	x	x	x	x	x	x	x	x	x	x	x	x	x	x	x	x	x	x	x	x	x	x

33 Ethernet (ETH): media access control (MAC) with DMA controller

This section applies only to STM32F42xx/F43xx and STM32F407x/F417x devices.

33.1 Ethernet introduction

Portions Copyright (c) 2004, 2005 Synopsys, Inc. All rights reserved. Used with permission.

The Ethernet peripheral enables the STM32F4xx to transmit and receive data over Ethernet in compliance with the IEEE 802.3-2002 standard.

The Ethernet provides a configurable, flexible peripheral to meet the needs of various applications and customers. It supports two industry standard interfaces to the external physical layer (PHY): the default media independent interface (MII) defined in the IEEE 802.3 specifications and the reduced media independent interface (RMII). It can be used in number of applications such as switches, network interface cards, etc.

The Ethernet is compliant with the following standards:

- IEEE 802.3-2002 for Ethernet MAC
- IEEE 1588-2008 standard for precision networked clock synchronization
- AMBA 2.0 for AHB Master/Slave ports
- RMII specification from RMII consortium

33.2 Ethernet main features

The Ethernet (ETH) peripheral includes the following features, listed by category:

33.2.1 MAC core features

- Supports 10/100 Mbit/s data transfer rates with external PHY interfaces
- IEEE 802.3-compliant MII interface to communicate with an external Fast Ethernet PHY
- Supports both full-duplex and half-duplex operations
  - Supports CSMA/CD Protocol for half-duplex operation
  - Supports IEEE 802.3x flow control for full-duplex operation
  - Optional forwarding of received pause control frames to the user application in full-duplex operation
  - Back-pressure support for half-duplex operation
  - Automatic transmission of zero-quanta pause frame on deassertion of flow control input in full-duplex operation
- Preamble and start-of-frame data (SFD) insertion in Transmit, and deletion in Receive paths
- Automatic CRC and pad generation controllable on a per-frame basis
- Options for automatic pad/CRC stripping on receive frames
- Programmable frame length to support Standard frames with sizes up to 16 KB
- Programmable interframe gap (40-96 bit times in steps of 8)
- Supports a variety of flexible address filtering modes:
  - Up to four 48-bit perfect (DA) address filters with masks for each byte
  - Up to three 48-bit SA address comparison check with masks for each byte
  - 64-bit Hash filter (optional) for multicast and unicast (DA) addresses
  - Option to pass all multicast addressed frames
  - Promiscuous mode support to pass all frames without any filtering for network monitoring
  - Passes all incoming packets (as per filter) with a status report
- Separate 32-bit status returned for transmission and reception packets
- Supports IEEE 802.1Q VLAN tag detection for reception frames
- Separate transmission, reception, and control interfaces to the Application
- Supports mandatory network statistics with RMON/MIB counters (RFC2819/RFC2665)
- MDIO interface for PHY device configuration and management
- Detection of LAN wakeup frames and AMD Magic Packet™ frames
- Receive feature for checksum off-load for received IPv4 and TCP packets encapsulated by the Ethernet frame
- Enhanced receive feature for checking IPv4 header checksum and TCP, UDP, or ICMP checksum encapsulated in IPv4 or IPv6 datagrams
- Support Ethernet frame time stamping as described in IEEE 1588-2008. Sixty-four-bit time stamps are given in each frame's transmit or receive status
- Two sets of FIFOs: a 2-KB Transmit FIFO with programmable threshold capability, and a 2-KB Receive FIFO with a configurable threshold (default of 64 bytes)
- Receive Status vectors inserted into the Receive FIFO after the EOF transfer enables multiple-frame storage in the Receive FIFO without requiring another FIFO to store those frames' Receive Status
- Option to filter all error frames on reception and not forward them to the application in

Store-and-Forward mode
- Option to forward under-sized good frames
- Supports statistics by generating pulses for frames dropped or corrupted (due to overflow) in the Receive FIFO
- Supports Store and Forward mechanism for transmission to the MAC core
- Automatic generation of PAUSE frame control or back pressure signal to the MAC core based on Receive FIFO-fill (threshold configurable) level
- Handles automatic retransmission of Collision frames for transmission
- Discards frames on late collision, excessive collisions, excessive deferral and underrun conditions
- Software control to flush Tx FIFO
- Calculates and inserts IPv4 header checksum and TCP, UDP, or ICMP checksum in frames transmitted in Store-and-Forward mode
- Supports internal loopback on the MII for debugging

33.2.2 DMA features

- Supports all AHB burst types in the AHB Slave Interface
- Software can select the type of AHB burst (fixed or indefinite burst) in the AHB Master interface.
- Option to select address-aligned bursts from AHB master port
- Optimization for packet-oriented DMA transfers with frame delimiters
- Byte-aligned addressing for data buffer support
- Dual-buffer (ring) or linked-list (chained) descriptor chaining
- Descriptor architecture, allowing large blocks of data transfer with minimum CPU intervention;
- each descriptor can transfer up to 8 KB of data
- Comprehensive status reporting for normal operation and transfers with errors
- Individual programmable burst size for Transmit and Receive DMA Engines for optimal host bus utilization
- Programmable interrupt options for different operational conditions
- Per-frame Transmit/Receive complete interrupt control
- Round-robin or fixed-priority arbitration between Receive and Transmit engines
- Start/Stop modes
- Current Tx/Rx Buffer pointer as status registers
- Current Tx/Rx Descriptor pointer as status registers

33.2.3 PTP features

- Received and transmitted frames time stamping
- Coarse and fine correction methods
- Trigger interrupt when system time becomes greater than target time
- Pulse per second output (product alternate function output)

33.3 Ethernet pins

Table 185 shows the MAC signals and the corresponding MII/RMII signal mapping. All MAC signals are mapped onto AF11, some signals are mapped onto different I/O pins, and should be configured in Alternate function mode (for more details, refer to *Section 8.3.2: I/O pin multiplexer and mapping*).

Table 185. Alternate function mapping

Port	AF11
	ETH
PA0-WKUP	ETH_MII_CRS
PA1	ETH_MII _RX_CLK / ETH_RMII _REF_CLK
PA2	ETH _MDIO
PA3	ETH _MII_COL
PA7	ETH_MII _RX_DV / ETH_RMII _CRS_DV
PB0	ETH _MII_RXD2
PB1	ETH _MII_RXD3
PB5	ETH _PPS_OUT
PB8	ETH _MII_TXD3
PB10	ETH_ MII_RX_ER
PB11	ETH _MII_TX_EN / ETH _RMII_TX_EN
PB12	ETH _MII_TXD0 / ETH _RMII_TXD0
PB13	ETH _MII_TXD1 / ETH _RMII_TXD1
PC1	ETH _MDC
PC2	ETH _MII_TXD2
PC3	ETH _MII_TX_CLK
PC4	ETH_MII_RXD0 / ETH_RMII_RXD0
PC5	ETH _MII_RXD1/ ETH _RMII_RXD1
PE2	ETH_MII_TXD3
PG8	ETH_PPS_OUT
PG11	ETH _MII_TX_EN / ETH _RMII_TX_EN
PG13	ETH _MII_TXD0 / ETH _RMII_TXD0
PG14	ETH _MII_TXD1 / ETH _RMII_TXD1
PH2	ETH _MII_CRS
PH3	ETH _MII_COL
PH6	ETH _MII_RXD2
PH7	ETH _MII_RXD3
PI10	ETH _MII_RX_ER

33.4 Ethernet functional description: SMI, MII and RMII

The Ethernet peripheral consists of a MAC 802.3 (media access control) with a dedicated DMA controller. It supports both default media-independent interface (MII) and reduced media-independent interface (RMII) through one selection bit (refer to SYSCFG_PMC register).

The DMA controller interfaces with the Core and memories through the AHB Master and Slave interfaces. The AHB Master Interface controls data transfers while the AHB Slave interface accesses Control and Status Registers (CSR) space.

The Transmit FIFO (Tx FIFO) buffers data read from system memory by the DMA before transmission by the MAC Core. Similarly, the Receive FIFO (Rx FIFO) stores the Ethernet frames received from the line until they are transferred to system memory by the DMA.

The Ethernet peripheral also includes an SMI to communicate with external PHY. A set of configuration registers permit the user to select the desired mode and features for the MAC and the DMA controller.

Note: The AHB clock frequency must be at least 25 MHz when the Ethernet is used.

Figure 350. ETH block diagram

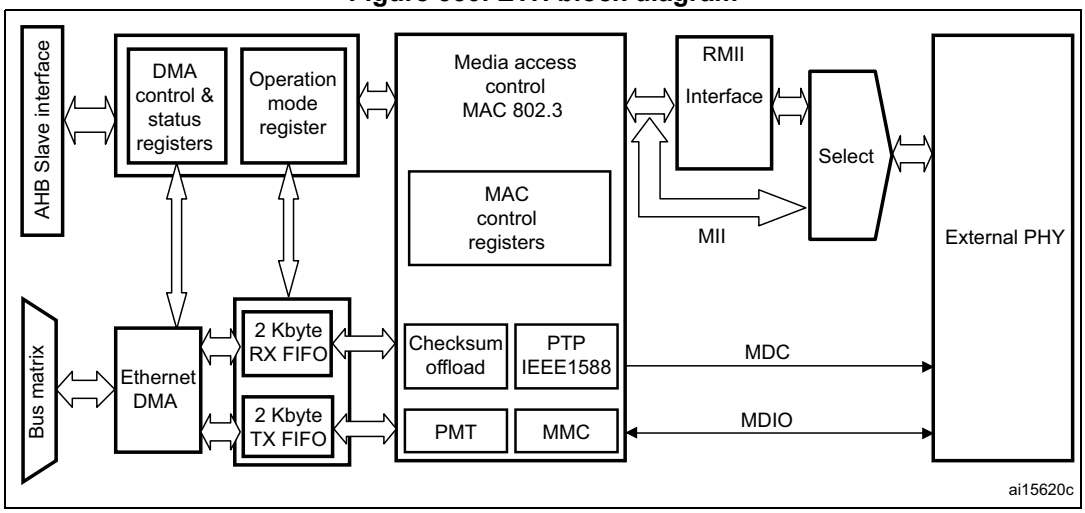

1. For AHB connections refer to *Figure 1: System architecture for STM32F405xx/07xx and STM32F415xx/17xx devices* and *Figure 2: System architecture for STM32F42xxx and STM32F43xxx devices*.

33.4.1 Station management interface: SMI

The station management interface (SMI) allows the application to access any PHY registers through a 2-wire clock and data lines. The interface supports accessing up to 32 PHYs.

The application can select one of the 32 PHYs and one of the 32 registers within any PHY and send control data or receive status information. Only one register in one PHY can be addressed at any given time.

Both the MDC clock line and the MDIO data line are implemented as alternate function I/O in the microcontroller:

- MDC: a periodic clock that provides the timing reference for the data transfer at the maximum frequency of 2.5 MHz. The minimum high and low times for MDC must be

160 ns each, and the minimum period for MDC must be 400 ns. In idle state the SMI management interface drives the MDC clock signal low.

- MDIO: data input/output bitstream to transfer status information to/from the PHY device synchronously with the MDC clock signal

Figure 351. SMI interface signals

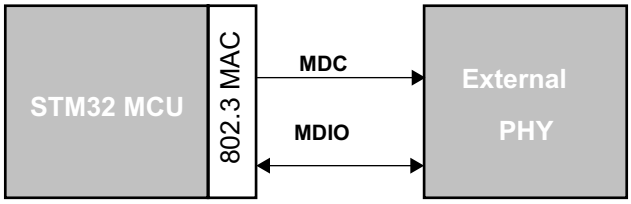

SMI frame format

The frame structure related to a read or write operation is shown in *Table 13*, the order of bit transmission must be from left to right.

Table 186. Management frame format

	Management frame fields							
	Preamble (32 bits)	**Start**	**Operation**	**PADDR**	**RADDR**	**TA**	**Data (16 bits)**	**Idle**
Read	1... 1	01	10	ppppp	rrrrr	Z0	dddddddddddddd	Z
Write	1... 1	01	01	ppppp	rrrrr	10	dddddddddddddd	Z

The management frame consists of eight fields:

- **Preamble**: each transaction (read or write) can be initiated with the preamble field that corresponds to 32 contiguous logic one bits on the MDIO line with 32 corresponding cycles on MDC. This field is used to establish synchronization with the PHY device.
- **Start**: the start of frame is defined by a <01> pattern to verify transitions on the line from the default logic one state to zero and back to one.
- **Operation**: defines the type of transaction (read or write) in progress.
- **PADDR**: the PHY address is 5 bits, allowing 32 unique PHY addresses. The MSB bit of the address is the first transmitted and received.
- **RADDR**: the register address is 5 bits, allowing 32 individual registers to be addressed within the selected PHY device. The MSB bit of the address is the first transmitted and received.
- **TA**: the turn-around field defines a 2-bit pattern between the RADDR and DATA fields to avoid contention during a read transaction. For a read transaction the MAC controller drives high-impedance on the MDIO line for the 2 bits of TA. The PHY device must drive a high-impedance state on the first bit of TA, a zero bit on the second one.

For a write transaction, the MAC controller drives a <10> pattern during the TA field. The PHY device must drive a high-impedance state for the 2 bits of TA.

- **Data**: the data field is 16-bit. The first bit transmitted and received must be bit 15 of the ETH_MIID register.
- **Idle**: the MDIO line is driven in high-impedance state. All three-state drivers must be disabled and the PHY's pull-up resistor keeps the line at logic one.

SMI write operation

When the application sets the MII Write and Busy bits (in *Ethernet MAC MII address register (ETH_MACMIIAR)*), the SMI initiates a write operation into the PHY registers by transferring the PHY address, the register address in PHY, and the write data (in *Ethernet MAC MII data register (ETH_MACMIIDR)*. The application should not change the MII Address register contents or the MII Data register while the transaction is ongoing. Write operations to the MII Address register or the MII Data Register during this period are ignored (the Busy bit is high), and the transaction is completed without any error. After the Write operation has completed, the SMI indicates this by resetting the Busy bit.

Figure 352 shows the frame format for the write operation.

Figure 352. MDIO timing and frame structure - Write cycle

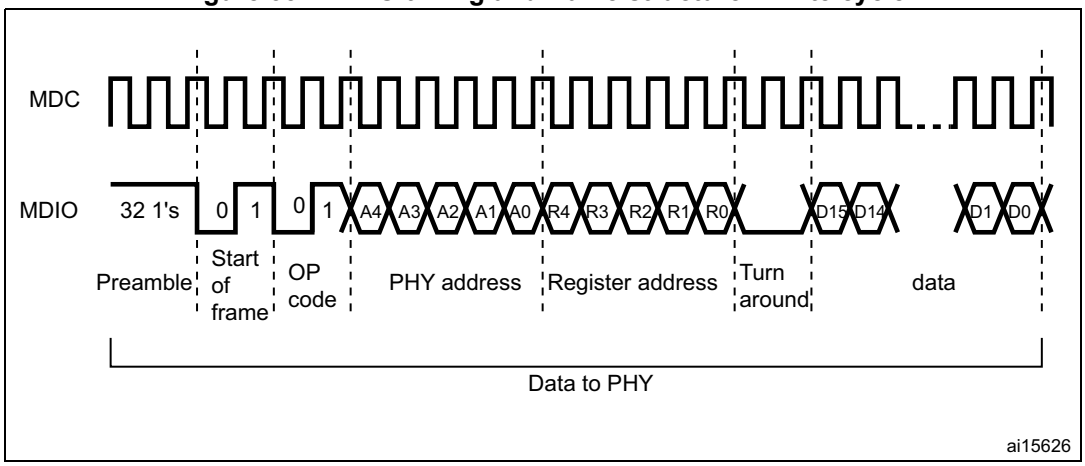

SMI read operation

When the user sets the MII Busy bit in the Ethernet MAC MII address register (ETH_MACMIIAR) with the MII Write bit at 0, the SMI initiates a read operation in the PHY registers by transferring the PHY address and the register address in PHY. The application should not change the MII Address register contents or the MII Data register while the transaction is ongoing. Write operations to the MII Address register or MII Data Register during this period are ignored (the Busy bit is high) and the transaction is completed without any error. After the read operation has completed, the SMI resets the Busy bit and then updates the MII Data register with the data read from the PHY.

Figure 353 shows the frame format for the read operation.

Figure 353. MDIO timing and frame structure - Read cycle

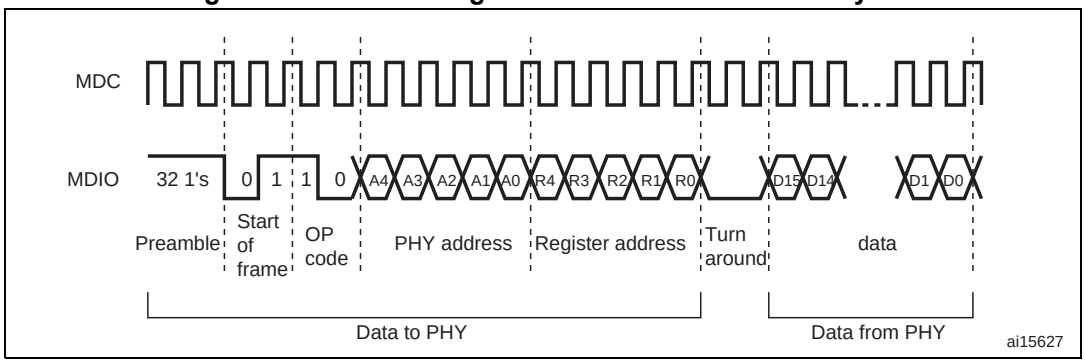

SMI clock selection

The MAC initiates the Management Write/Read operation. The SMI clock is a divided clock whose source is the application clock (AHB clock). The divide factor depends on the clock range setting in the MII Address register.

Table 187 shows how to set the clock ranges.

Table 187. Clock range

Selection	HCLK clock	MDC clock
000	60-100 MHz	AHB clock / 42
001	100-150 MHz	AHB clock / 62
010	20-35 MHz	AHB clock / 16
011	35-60 MHz	AHB clock / 26
100	150-180 MHz	AHB clock / 102
101, 110, 111	Reserved	-

33.4.2 Media-independent interface: MII

The media-independent interface (MII) defines the interconnection between the MAC sublayer and the PHY for data transfer at 10 Mbit/s and 100 Mbit/s.

Figure 354. Media independent interface signals

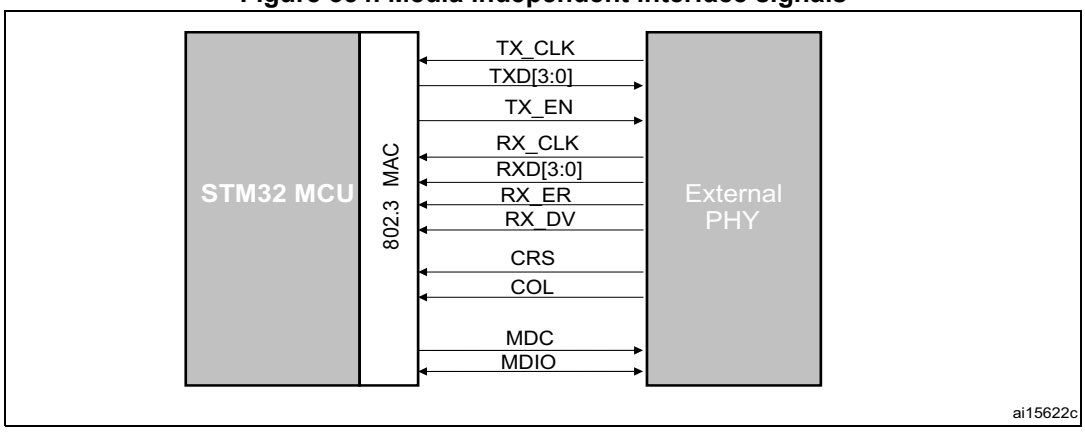

- MII_TX_CLK: continuous clock that provides the timing reference for the TX data transfer. The nominal frequency is: 2.5 MHz at 10 Mbit/s speed; 25 MHz at 100 Mbit/s speed.
- MII_RX_CLK: continuous clock that provides the timing reference for the RX data transfer. The nominal frequency is: 2.5 MHz at 10 Mbit/s speed; 25 MHz at 100 Mbit/s speed.
- MII_TX_EN: transmission enable indicates that the MAC is presenting nibbles on the MII for transmission. It must be asserted synchronously (MII_TX_CLK) with the first nibble of the preamble and must remain asserted while all nibbles to be transmitted are presented to the MII.
- MII_TXD[3:0]: transmit data is a bundle of 4 data signals driven synchronously by the MAC sublayer and qualified (valid data) on the assertion of the MII_TX_EN signal. MII_TXD[0] is the least significant bit, MII_TXD[3] is the most significant bit. While MII_TX_EN is deasserted the transmit data must have no effect upon the PHY.
- MII_CRS: carrier sense is asserted by the PHY when either the transmit or receive medium is non idle. It shall be deasserted by the PHY when both the transmit and receive media are idle. The PHY must ensure that the MII_CS signal remains asserted throughout the duration of a collision condition. This signal is not required to transition synchronously with respect to the TX and RX clocks. In full duplex mode the state of this signal is don't care for the MAC sublayer.
- MII_COL: collision detection must be asserted by the PHY upon detection of a collision on the medium and must remain asserted while the collision condition persists. This signal is not required to transition synchronously with respect to the TX and RX clocks. In full duplex mode the state of this signal is don't care for the MAC sublayer.
- MII_RXD[3:0]: reception data is a bundle of 4 data signals driven synchronously by the PHY and qualified (valid data) on the assertion of the MII_RX_DV signal. MII_RXD[0] is the least significant bit, MII_RXD[3] is the most significant bit. While MII_RX_EN is deasserted and MII_RX_ER is asserted, a specific MII_RXD[3:0] value is used to transfer specific information from the PHY (see *Table 189*).
- MII_RX_DV: receive data valid indicates that the PHY is presenting recovered and decoded nibbles on the MII for reception. It must be asserted synchronously (MII_RX_CLK) with the first recovered nibble of the frame and must remain asserted through the final recovered nibble. It must be deasserted prior to the first clock cycle that follows the final nibble. In order to receive the frame correctly, the MII_RX_DV signal must encompass the frame, starting no later than the SFD field.
- MII_RX_ER: receive error must be asserted for one or more clock periods (MII_RX_CLK) to indicate to the MAC sublayer that an error was detected somewhere in the frame. This error condition must be qualified by MII_RX_DV assertion as described in *Table 189*.

Table 188. TX interface signal encoding

MII_TX_EN	MII_TXD[3:0]	Description
0	0000 through 1111	Normal inter-frame
1	0000 through 1111	Normal data transmission

Table 189. RX interface signal encoding

MII_RX_DV	MII_RX_ERR	MII_RXD[3:0]	Description
0	0	0000 through 1111	Normal inter-frame
0	1	0000	Normal inter-frame
0	1	0001 through 1101	Reserved
0	1	1110	False carrier indication
0	1	1111	Reserved
1	0	0000 through 1111	Normal data reception
1	1	0000 through 1111	Data reception with errors

MII clock sources

To generate both TX_CLK and RX_CLK clock signals, the external PHY must be clocked with an external 25 MHz as shown in *Figure 355*. Instead of using an external 25 MHz quartz to provide this clock, the STM32F4xxmicrocontroller can output this signal on its MCO pin. In this case, the PLL multiplier has to be configured so as to get the desired frequency on the MCO pin, from the 25 MHz external quartz.

Figure 355. MII clock sources

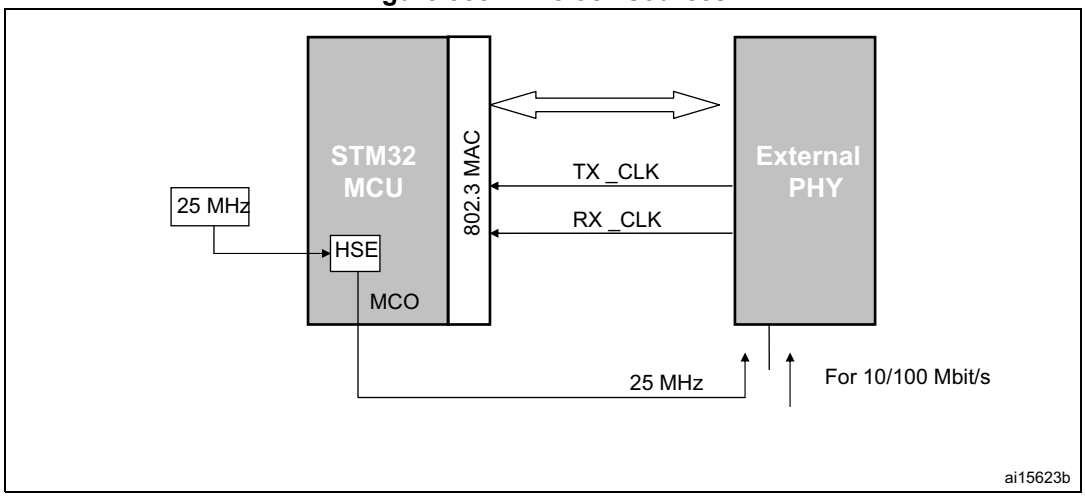

33.4.3 Reduced media-independent interface: RMII

The reduced media-independent interface (RMII) specification reduces the pin count between the microcontroller Ethernet peripheral and the external Ethernet in 10/100 Mbit/s. According to the IEEE 802.3u standard, an MII contains 16 pins for data and control. The RMII specification is dedicated to reduce the pin count to 7 pins (a 62.5% decrease in pin count).

The RMII is instantiated between the MAC and the PHY. This helps translation of the MAC's MII into the RMII. The RMII block has the following characteristics:

- It supports 10-Mbit/s and 100-Mbit/s operating rates
- The clock reference must be doubled to 50 MHz
- The same clock reference must be sourced externally to both MAC and external Ethernet PHY
- It provides independent 2-bit wide (dibit) transmit and receive data paths

Figure 356. Reduced media-independent interface signals

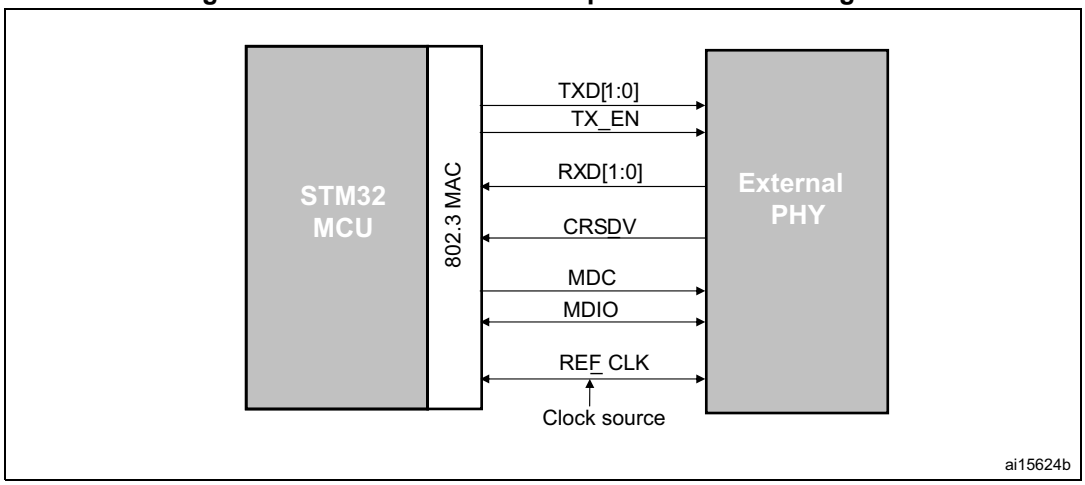

RMII clock sources

Either clock the PHY from an external 50 MHz clock or use a PHY with an embedded PLL to generate the 50 MHz frequency.

Figure 357. RMII clock sources

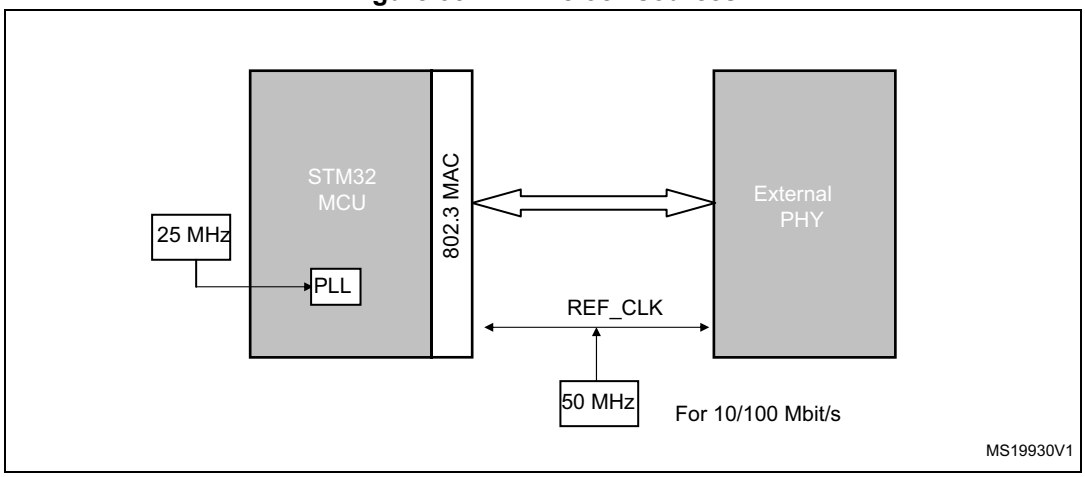

33.4.4 MII/RMII selection

The mode, MII or RMII, is selected using the configuration bit 23, MII_RMII_SEL, in the SYSCFG_PMC register. The application has to set the MII/RMII mode while the Ethernet controller is under reset or before enabling the clocks.

MII/RMII internal clock scheme

The clock scheme required to support both the MII and RMII, as well as 10 and 100 Mbit/s operations is described in *Figure 358*.

Figure 358. Clock scheme

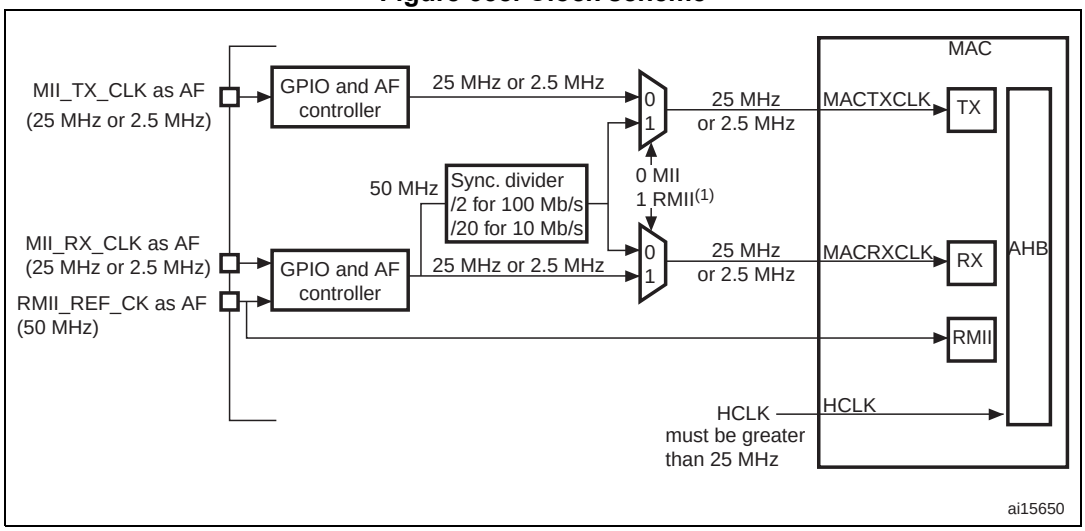

1. The MII/RMII selection is controlled through bit 23, MII_RMII_SEL, in the SYSCFG_PMC register.

To save a pin, the two input clock signals, RMII_REF_CK and MII_RX_CLK, are multiplexed on the same GPIO pin.

33.5 Ethernet functional description: MAC 802.3

The IEEE 802.3 International Standard for local area networks (LANs) employs the CSMA/CD (carrier sense multiple access with collision detection) as the access method.

The Ethernet peripheral consists of a MAC 802.3 (media access control) controller with media independent interface (MII) and a dedicated DMA controller.

The MAC block implements the LAN CSMA/CD sublayer for the following families of systems: 10 Mbit/s and 100 Mbit/s of data rates for baseband and broadband systems. Half- and full-duplex operation modes are supported. The collision detection access method is applied only to the half-duplex operation mode. The MAC control frame sublayer is supported.

The MAC sublayer performs the following functions associated with a data link control procedure:

- Data encapsulation (transmit and receive)
  - Framing (frame boundary delimitation, frame synchronization)
  - Addressing (handling of source and destination addresses)
  - Error detection
- Media access management
  - Medium allocation (collision avoidance)
  - Contention resolution (collision handling)

Basically there are two operating modes of the MAC sublayer:

- Half-duplex mode: the stations contend for the use of the physical medium, using the CSMA/CD algorithms.
- Full duplex mode: simultaneous transmission and reception without contention resolution (CSMA/CD algorithm are unnecessary) when all the following conditions are met:
  - physical medium capability to support simultaneous transmission and reception
  - exactly 2 stations connected to the LAN
  - both stations configured for full-duplex operation

33.5.1 MAC 802.3 frame format

The MAC block implements the MAC sublayer and the optional MAC control sublayer (10/100 Mbit/s) as specified by the IEEE 802.3-2002 standard.

Two frame formats are specified for data communication systems using the CSMA/CD MAC:

- Basic MAC frame format
- Tagged MAC frame format (extension of the basic MAC frame format)

Figure 360 and *Figure 361* describe the frame structure (untagged and tagged) that includes the following fields:

- Preamble: 7-byte field used for synchronization purposes (PLS circuitry)

  Hexadecimal value: 55-55-55-55-55-55-55

  Bit pattern: 01010101 01010101 01010101 01010101 01010101 01010101 01010101 (right-to-left bit transmission)
- Start frame delimiter (SFD): 1-byte field used to indicate the start of a frame. Hexadecimal value: D5

  Bit pattern: 11010101 (right-to-left bit transmission)
- Destination and Source Address fields: 6-byte fields to indicate the destination and source station addresses as follows (see *Figure 359*):
  - Each address is 48 bits in length
  - The first LSB bit (I/G) in the destination address field is used to indicate an individual (I/G = 0) or a group address (I/G = 1). A group address could identify none, one or more, or all the stations connected to the LAN. In the source address the first bit is reserved and reset to 0.
  - The second bit (U/L) distinguishes between locally (U/L = 1) or globally (U/L = 0) administered addresses. For broadcast addresses this bit is also 1.
  - Each byte of each address field must be transmitted least significant bit first.

The address designation is based on the following types:

- Individual address: this is the physical address associated with a particular station on the network.
- Group address. A multidestination address associated with one or more stations on a given network. There are two kinds of multicast address:
  - Multicast-group address: an address associated with a group of logically related stations.
  - Broadcast address: a distinguished, predefined multicast address (all 1's in the destination address field) that always denotes all the stations on a given LAN.

Figure 359. Address field format

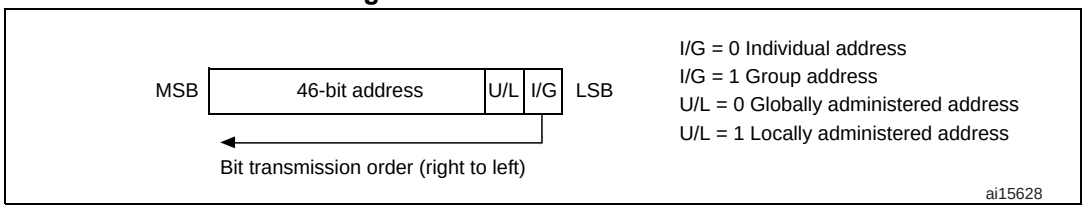

- QTag Prefix: 4-byte field inserted between the Source address field and the MAC Client Length/Type field. This field is an extension of the basic frame (untagged) to obtain the tagged MAC frame. The untagged MAC frames do not include this field. The extensions for tagging are as follows:
  - 2-byte constant Length/Type field value consistent with the Type interpretation (greater than 0x0600) equal to the value of the 802.1Q Tag Protocol Type (0x8100 hexadecimal). This constant field is used to distinguish tagged and untagged MAC frames.
  - 2-byte field containing the Tag control information field subdivided as follows: a 3-bit user priority, a canonical format indicator (CFI) bit and a 12-bit VLAN Identifier. The length of the tagged MAC frame is extended by 4 bytes by the QTag Prefix.
- MAC client length/type: 2-byte field with different meaning (mutually exclusive), depending on its value:
  - If the value is less than or equal to maxValidFrame (0d1500) then this field indicates the number of MAC client data bytes contained in the subsequent data field of the 802.3 frame (length interpretation).
  - If the value is greater than or equal to MinTypeValue (0d1536 decimal, 0x0600) then this field indicates the nature of the MAC client protocol (Type interpretation) related to the Ethernet frame.

  Regardless of the interpretation of the length/type field, if the length of the data field is less than the minimum required for proper operation of the protocol, a PAD field is added after the data field but prior to the FCS (frame check sequence) field. The length/type field is transmitted and received with the higher-order byte first.

  For length/type field values in the range between maxValidLength and minTypeValue (boundaries excluded), the behavior of the MAC sublayer is not specified: they may or may not be passed by the MAC sublayer.
- Data and PAD fields: n-byte data field. Full data transparency is provided, it means that any arbitrary sequence of byte values may appear in the data field. The size of the PAD, if any, is determined by the size of the data field. Max and min length of the data and PAD field are:
  - Maximum length = 1500 bytes
  - Minimum length for untagged MAC frames = 46 bytes
  - Minimum length for tagged MAC frames = 42 bytes

  When the data field length is less than the minimum required, the PAD field is added to match the minimum length (42 bytes for tagged frames, 46 bytes for untagged frames).
- Frame check sequence: 4-byte field that contains the cyclic redundancy check (CRC) value. The CRC computation is based on the following fields: source address, destination address, QTag prefix, length/type, LLC data and PAD (that is, all fields except the preamble, SFD). The generating polynomial is the following:

$$G(x) = x^{32} + x^{26} + x^{23} + x^{22} + x^{16} + x^{12} + x^{11} + x^{10} + x^{8} + x^{7} + x^{5} + x^{4} + x^{2} + x + 1$$

The CRC value of a frame is computed as follows:

- The first 2 bits of the frame are complemented
- The n-bits of the frame are the coefficients of a polynomial M(x) of degree (n – 1). The first bit of the destination address corresponds to the x^{n-1} term and the last bit of the data field corresponds to the x^0 term
- M(x) is multiplied by x^{32} and divided by G(x), producing a remainder R(x) of degree ≤ 31
- The coefficients of R(x) are considered as a 32-bit sequence
- The bit sequence is complemented and the result is the CRC
- The 32-bits of the CRC value are placed in the frame check sequence. The x^{32} term is the first transmitted, the x^0 term is the last one

Figure 360. MAC frame format

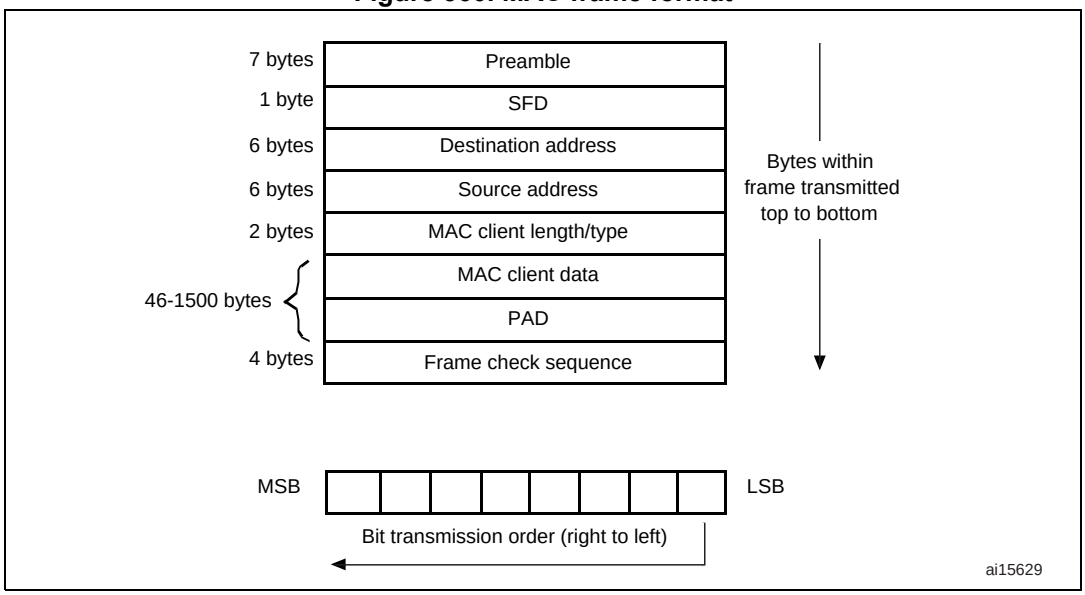

Figure 361. Tagged MAC frame format

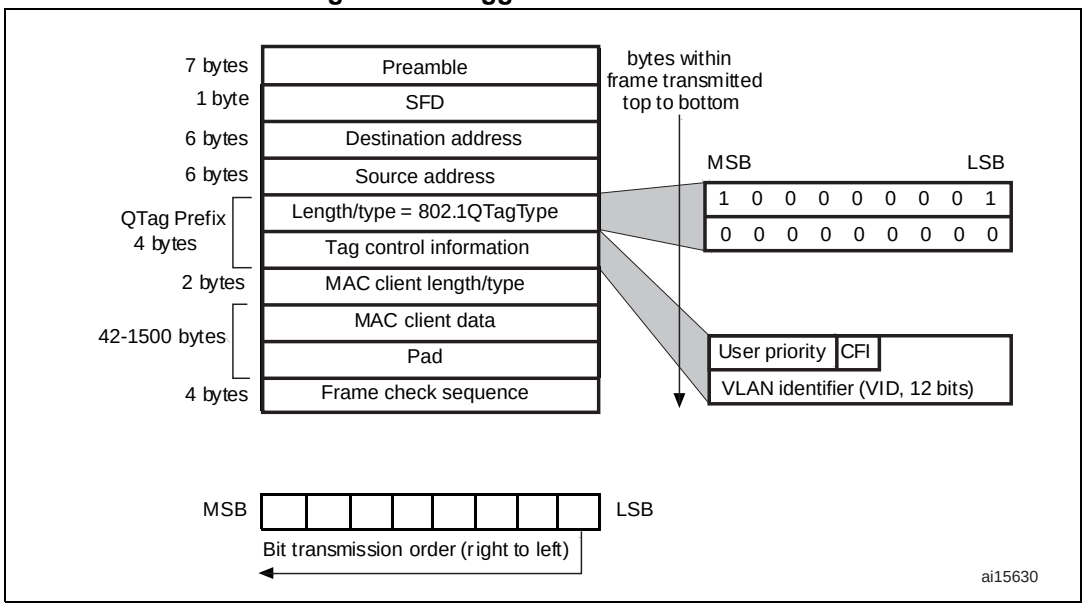

Each byte of the MAC frame, except the FCS field, is transmitted low-order bit first.

An invalid MAC frame is defined by one of the following conditions:

- The frame length is inconsistent with the expected value as specified by the length/type field. If the length/type field contains a type value, then the frame length is assumed to be consistent with this field (no invalid frame)
- The frame length is not an integer number of bytes (extra bits)
- The CRC value computed on the incoming frame does not match the included FCS

33.5.2 MAC frame transmission

The DMA controls all transactions for the transmit path. Ethernet frames read from the system memory are pushed into the FIFO by the DMA. The frames are then popped out and transferred to the MAC core. When the end-of-frame is transferred, the status of the transmission is taken from the MAC core and transferred back to the DMA. The Transmit FIFO has a depth of 2 Kbyte. FIFO-fill level is indicated to the DMA so that it can initiate a data fetch in required bursts from the system memory, using the AHB interface. The data from the AHB Master interface is pushed into the FIFO.

When the SOF is detected, the MAC accepts the data and begins transmitting to the MII. The time required to transmit the frame data to the MII after the application initiates transmission is variable, depending on delay factors like IFG delay, time to transmit preamble/SFD, and any back-off delays for Half-duplex mode. After the EOF is transferred to the MAC core, the core completes normal transmission and then gives the status of transmission back to the DMA. If a normal collision (in Half-duplex mode) occurs during transmission, the MAC core makes the transmit status valid, then accepts and drops all further data until the next SOF is received. The same frame should be retransmitted from SOF on observing a Retry request (in the Status) from the MAC. The MAC issues an underflow status if the data are not provided continuously during the transmission. During the normal transfer of a frame, if the MAC receives an SOF without getting an EOF for the previous frame, then the SOF is ignored and the new frame is considered as the continuation of the previous frame.

There are two modes of operation for popping data towards the MAC core:

- In Threshold mode, as soon as the number of bytes in the FIFO crosses the configured threshold level (or when the end-of-frame is written before the threshold is crossed), the data is ready to be popped out and forwarded to the MAC core. The threshold level is configured using the TTC bits of ETH_DMABMR.
- In Store-and-forward mode, only after a complete frame is stored in the FIFO, the frame is popped towards the MAC core. If the Tx FIFO size is smaller than the Ethernet frame to be transmitted, then the frame is popped towards the MAC core when the Tx FIFO becomes almost full.

The application can flush the Transmit FIFO of all contents by setting the FTF (ETH_DMAOMR register [20]) bit. This bit is self-clearing and initializes the FIFO pointers to the default state. If the FTF bit is set during a frame transfer to the MAC core, then transfer is stopped as the FIFO is considered to be empty. Hence an underflow event occurs at the MAC transmitter and the corresponding Status word is forwarded to the DMA.

Automatic CRC and pad generation

When the number of bytes received from the application falls below 60 (DA+SA+LT+Data), zeros are appended to the transmitting frame to make the data length exactly 46 bytes to meet the minimum data field requirement of IEEE 802.3. The MAC can be programmed not to append any padding. The cyclic redundancy check (CRC) for the frame check sequence (FCS) field is calculated and appended to the data being transmitted. When the MAC is programmed to not append the CRC value to the end of Ethernet frames, the computed CRC is not transmitted. An exception to this rule is that when the MAC is programmed to append pads for frames (DA+SA+LT+Data) less than 60 bytes, CRC will be appended at the end of the padded frames.

The CRC generator calculates the 32-bit CRC for the FCS field of the Ethernet frame. The encoding is defined by the following polynomial.

$$G(x) = x^{32} + x^{26} + x^{23} + x^{22} + x^{16} + x^{12} + x^{11} + x^{10} + x^{8} + x^{7} + x^{5} + x^{4} + x^{2} + x + 1$$

Transmit protocol

The MAC controls the operation of Ethernet frame transmission. It performs the following functions to meet the IEEE 802.3/802.3z specifications. It:

- generates the preamble and SFD
- generates the jam pattern in Half-duplex mode
- controls the Jabber timeout
- controls the flow for Half-duplex mode (back pressure)
- generates the transmit frame status
- contains time stamp snapshot logic in accordance with IEEE 1588

When a new frame transmission is requested, the MAC sends out the preamble and SFD, followed by the data. The preamble is defined as 7 bytes of 0b10101010 pattern, and the SFD is defined as 1 byte of 0b10101011 pattern. The collision window is defined as 1 slot time (512 bit times for 10/100 Mbit/s Ethernet). The jam pattern generation is applicable only to Half-duplex mode, not to Full-duplex mode.

In MII mode, if a collision occurs at any time from the beginning of the frame to the end of the CRC field, the MAC sends a 32-bit jam pattern of 0x5555 5555 on the MII to inform all

other stations that a collision has occurred. If the collision is seen during the preamble transmission phase, the MAC completes the transmission of the preamble and SFD and then sends the jam pattern.

A jabber timer is maintained to cut off the transmission of Ethernet frames if more than 2048 (default) bytes have to be transferred. The MAC uses the deferral mechanism for flow control (back pressure) in Half-duplex mode. When the application requests to stop receiving frames, the MAC sends a JAM pattern of 32 bytes whenever it senses the reception of a frame, provided that transmit flow control is enabled. This results in a collision and the remote station backs off. The application requests flow control by setting the BPA bit (bit 0) in the ETH_MACFCR register. If the application requests a frame to be transmitted, then it is scheduled and transmitted even when back pressure is activated. Note that if back pressure is kept activated for a long time (and more than 16 consecutive collision events occur) then the remote stations abort their transmissions due to excessive collisions. If IEEE 1588 time stamping is enabled for the transmit frame, this block takes a snapshot of the system time when the SFD is put onto the transmit MII bus.

Transmit scheduler

The MAC is responsible for scheduling the frame transmission on the MII. It maintains the interframe gap between two transmitted frames and follows the truncated binary exponential backoff algorithm for Half-duplex mode. The MAC enables transmission after satisfying the IFG and backoff delays. It maintains an idle period of the configured interframe gap (IFG bits in the ETH_MACCR register) between any two transmitted frames. If frames to be transmitted arrive sooner than the configured IFG time, the MII waits for the enable signal from the MAC before starting the transmission on it. The MAC starts its IFG counter as soon as the carrier signal of the MII goes inactive. At the end of the programmed IFG value, the MAC enables transmission in Full-duplex mode. In Half-duplex mode and when IFG is configured for 96 bit times, the MAC follows the rule of deference specified in Section 4.2.3.2.1 of the IEEE 802.3 specification. The MAC resets its IFG counter if a carrier is detected during the first two-thirds (64-bit times for all IFG values) of the IFG interval. If the carrier is detected during the final one third of the IFG interval, the MAC continues the IFG count and enables the transmitter after the IFG interval. The MAC implements the truncated binary exponential backoff algorithm when it operates in Half-duplex mode.

Transmit flow control

When the Transmit Flow Control Enable bit (TFE bit in ETH_MACFCR) is set, the MAC generates Pause frames and transmits them as necessary, in Full-duplex mode. The Pause frame is appended with the calculated CRC, and is sent. Pause frame generation can be initiated in two ways.

A pause frame is sent either when the application sets the FCB bit in the ETH_MACFCR register or when the receive FIFO is full (packet buffer).

- If the application has requested flow control by setting the FCB bit in ETH_MACFCR, the MAC generates and transmits a single Pause frame. The value of the pause time in the generated frame contains the programmed pause time value in ETH_MACFCR. To extend the pause or end the pause prior to the time specified in the previously transmitted Pause frame, the application must request another Pause frame transmission after programming the Pause Time value (PT in ETH_MACFCR register) with the appropriate value.
- If the application has requested flow control when the receive FIFO is full, the MAC generates and transmits a Pause frame. The value of the pause time in the generated frame is the programmed pause time value in ETH_MACFCR. If the receive FIFO

remains full at a configurable number of slot-times (PLT bits in ETH_MACFCR) before this Pause time runs out, a second Pause frame is transmitted. The process is repeated as long as the receive FIFO remains full. If this condition is no more satisfied prior to the sampling time, the MAC transmits a Pause frame with zero pause time to indicate to the remote end that the receive buffer is ready to receive new data frames.

Single-packet transmit operation

The general sequence of events for a transmit operation is as follows:

1. If the system has data to be transferred, the DMA controller fetches them from the memory through the AHB Master interface and starts forwarding them to the FIFO. It continues to receive the data until the end of frame is transferred.
2. When the threshold level is crossed or a full packet of data is received into the FIFO, the frame data are popped and driven to the MAC core. The DMA continues to transfer data from the FIFO until a complete packet has been transferred to the MAC. Upon completion of the frame, the DMA controller is notified by the status coming from the MAC.

Transmit operation—Two packets in the buffer

1. Because the DMA must update the descriptor status before releasing it to the Host, there can be at the most two frames inside a transmit FIFO. The second frame is fetched by the DMA and put into the FIFO only if the OSF (operate on second frame) bit is set. If this bit is not set, the next frame is fetched from the memory only after the MAC has completely processed the frame and the DMA has released the descriptors.
2. If the OSF bit is set, the DMA starts fetching the second frame immediately after completing the transfer of the first frame to the FIFO. It does not wait for the status to be updated. In the meantime, the second frame is received into the FIFO while the first frame is being transmitted. As soon as the first frame has been transferred and the status is received from the MAC, it is pushed to the DMA. If the DMA has already completed sending the second packet to the FIFO, the second transmission must wait for the status of the first packet before proceeding to the next frame.

Retransmission during collision

While a frame is being transferred to the MAC, a collision event may occur on the MAC line interface in Half-duplex mode. The MAC would then indicate a retry attempt by giving the status even before the end of frame is received. Then the retransmission is enabled and the frame is popped out again from the FIFO. After more than 96 bytes have been popped towards the MAC core, the FIFO controller frees up that space and makes it available to the DMA to push in more data. This means that the retransmission is not possible after this threshold is crossed or when the MAC core indicates a late collision event.

Transmit FIFO flush operation

The MAC provides a control to the software to flush the Transmit FIFO through the use of Bit 20 in the Operation mode register. The Flush operation is immediate and the Tx FIFO and the corresponding pointers are cleared to the initial state even if the Tx FIFO is in the middle of transferring a frame to the MAC Core. This results in an underflow event in the MAC transmitter, and the frame transmission is aborted. The status of such a frame is marked with both underflow and frame flush events (TDES0 bits 13 and 1). No data are coming to the FIFO from the application (DMA) during the Flush operation. Transfer transmit status words are transferred to the application for the number of frames that is flushed (including partial frames). Frames that are completely flushed have the Frame flush status bit (TDES0 13) set. The Flush operation is completed when the application (DMA) has accepted all of

the Status words for the frames that were flushed. The Transmit FIFO Flush control register bit is then cleared. At this point, new frames from the application (DMA) are accepted. All data presented for transmission after a Flush operation are discarded unless they start with an SOF marker.

Transmit status word

At the end of the Ethernet frame transfer to the MAC core and after the core has completed the transmission of the frame, the transmit status is given to the application. The detailed description of the Transmit Status is the same as for bits [23:0] in TDES0. If IEEE 1588 time stamping is enabled, a specific frames' 64-bit time stamp is returned, along with the transmit status.

Transmit checksum offload

Communication protocols such as TCP and UDP implement checksum fields, which helps determine the integrity of data transmitted over a network. Because the most widespread use of Ethernet is to encapsulate TCP and UDP over IP datagrams, the Ethernet controller has a transmit checksum offload feature that supports checksum calculation and insertion in the transmit path, and error detection in the receive path. This section explains the operation of the checksum offload feature for transmitted frames.

Note: The checksum for TCP, UDP or ICMP is calculated over a complete frame, then inserted into its corresponding header field. Due to this requirement, this function is enabled only when the Transmit FIFO is configured for Store-and-forward mode (that is, when the TSF bit is set in the ETH_ETH_DMAOMR register). If the core is configured for Threshold (cut-through) mode, the Transmit checksum offload is bypassed.

You must make sure the Transmit FIFO is deep enough to store a complete frame before that frame is transferred to the MAC Core transmitter. If the FIFO depth is less than the input Ethernet frame size, the payload (TCP/UDP/ICMP) checksum insertion function is bypassed and only the frame's IPv4 Header checksum is modified, even in Store-and-forward mode.

The transmit checksum offload supports two types of checksum calculation and insertion. This checksum can be controlled for each frame by setting the CIC bits (Bits 28:27 in TDES1, described in *TDES1: Transmit descriptor Word1*).

See IETF specifications RFC 791, RFC 793, RFC 768, RFC 792, RFC 2460 and RFC 4443 for IPv4, TCP, UDP, ICMP, IPv6 and ICMPv6 packet header specifications, respectively.

- IP header checksum

  In IPv4 datagrams, the integrity of the header fields is indicated by the 16-bit header checksum field (the eleventh and twelfth bytes of the IPv4 datagram). The checksum offload detects an IPv4 datagram when the Ethernet frame's Type field has the value 0x0800 and the IP datagram's Version field has the value 0x4. The input frame's checksum field is ignored during calculation and replaced by the calculated value. IPv6 headers do not have a checksum field; thus, the checksum offload does not modify IPv6 header fields. The result of this IP header checksum calculation is indicated by the IP Header Error status bit in the Transmit status (Bit 16). This status bit is set whenever the values of the Ethernet Type field and the IP header's Version field are not consistent, or when the Ethernet frame does not have enough data, as indicated by the

IP header Length field. In other words, this bit is set when an IP header error is asserted under the following circumstances:

a) For IPv4 datagrams:

– The received Ethernet type is 0x0800, but the IP header's Version field does not equal 0x4

– The IPv4 Header Length field indicates a value less than 0x5 (20 bytes)

– The total frame length is less than the value given in the IPv4 Header Length field

b) For IPv6 datagrams:

– The Ethernet type is 0x86DD but the IP header Version field does not equal 0x6

– The frame ends before the IPv6 header (40 bytes) or extension header (as given in the corresponding Header Length field in an extension header) has been completely received. Even when the checksum offload detects such an IP header error, it inserts an IPv4 header checksum if the Ethernet Type field indicates an IPv4 payload.

- TCP/UDP/ICMP checksum

The TCP/UDP/ICMP checksum processes the IPv4 or IPv6 header (including extension headers) and determines whether the encapsulated payload is TCP, UDP or ICMP.

Note that:

a) For non-TCP, -UDP, or -ICMP/ICMPv6 payloads, this checksum is bypassed and nothing further is modified in the frame.

b) Fragmented IP frames (IPv4 or IPv6), IP frames with security features (such as an authentication header or encapsulated security payload), and IPv6 frames with routing headers are bypassed and not processed by the checksum.

The checksum is calculated for the TCP, UDP, or ICMP payload and inserted into its corresponding field in the header. It can work in the following two modes:

– In the first mode, the TCP, UDP, or ICMPv6 pseudo-header is not included in the checksum calculation and is assumed to be present in the input frame's checksum field. The checksum field is included in the checksum calculation, and then replaced by the final calculated checksum.

– In the second mode, the checksum field is ignored, the TCP, UDP, or ICMPv6 pseudo-header data are included into the checksum calculation, and the checksum field is overwritten with the final calculated value.

Note that: for ICMP-over-IPv4 packets, the checksum field in the ICMP packet must always be 0x0000 in both modes, because pseudo-headers are not defined for such packets. If it does not equal 0x0000, an incorrect checksum may be inserted into the packet.

The result of this operation is indicated by the payload checksum error status bit in the Transmit Status vector (bit 12). The payload checksum error status bit is set when either of the following is detected:

– the frame has been forwarded to the MAC transmitter in Store-and-forward mode without the end of frame being written to the FIFO

– the packet ends before the number of bytes indicated by the payload length field in the IP header is received.

When the packet is longer than the indicated payload length, the bytes are ignored as stuff bytes, and no error is reported. When the first type of error is detected, the TCP,

UDP or ICMP header is not modified. For the second error type, still, the calculated checksum is inserted into the corresponding header field.

MII/RMII transmit bit order

Each nibble from the MII is transmitted on the RMII a dibit at a time with the order of dibit transmission shown in *Figure 362*. Lower order bits (D1 and D0) are transmitted first followed by higher order bits (D2 and D3).

Figure 362. Transmission bit order

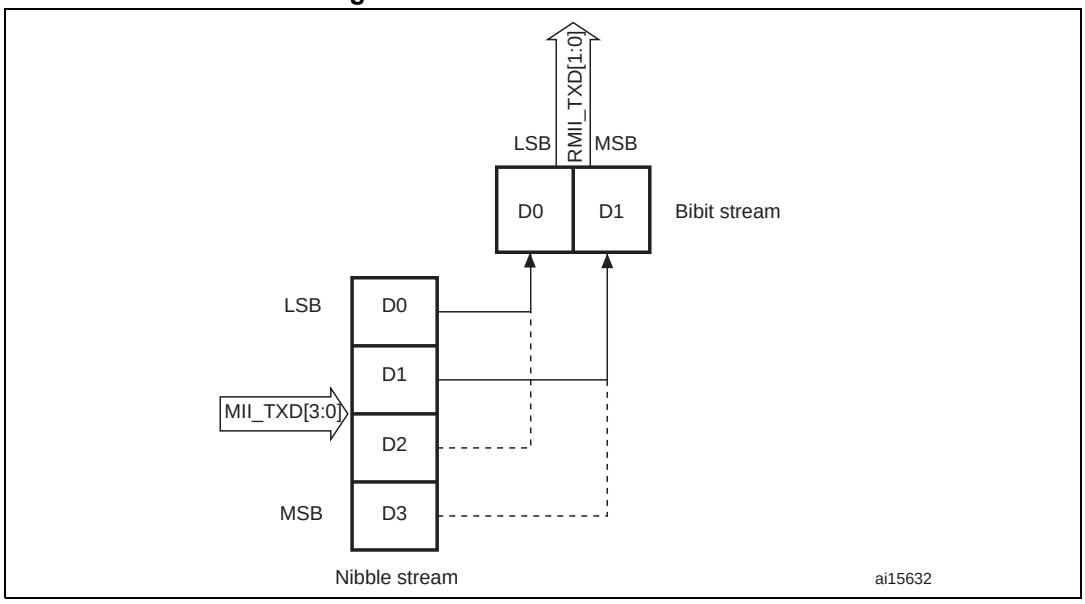

MII/RMII transmit timing diagrams

Figure 363. Transmission with no collision

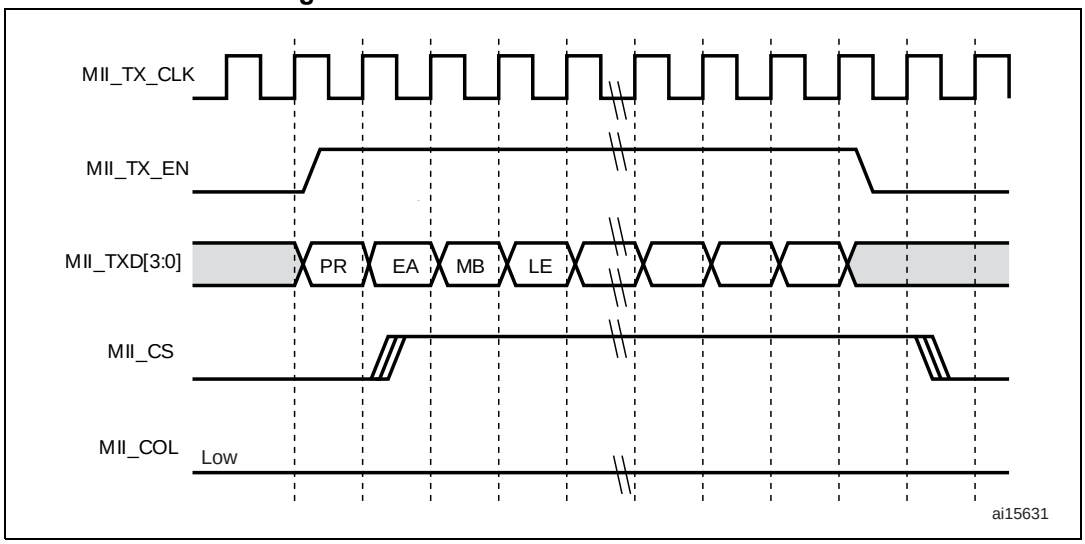

Figure 364. Transmission with collision

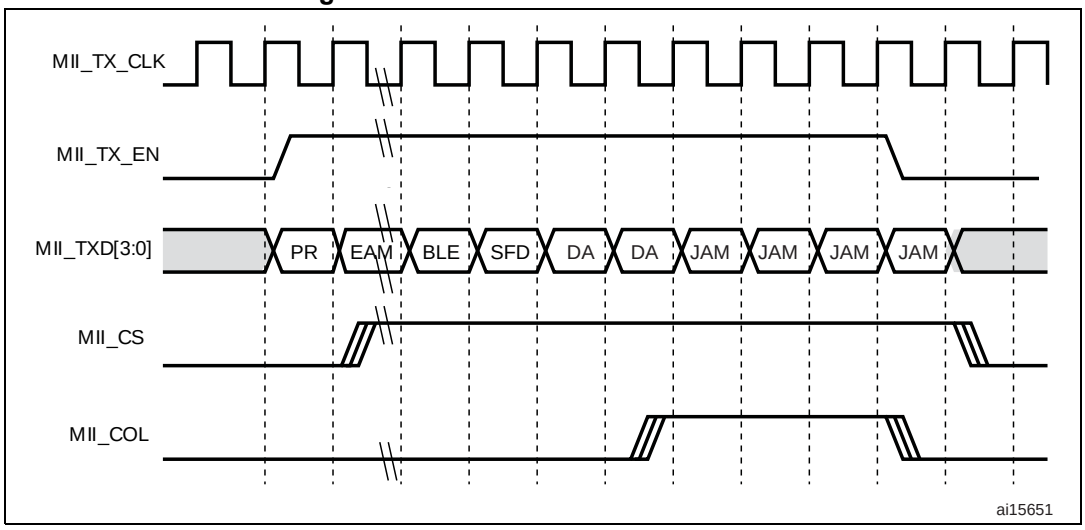

Figure 365 shows a frame transmission in MII and RMII.

Figure 365. Frame transmission in MMI and RMII modes

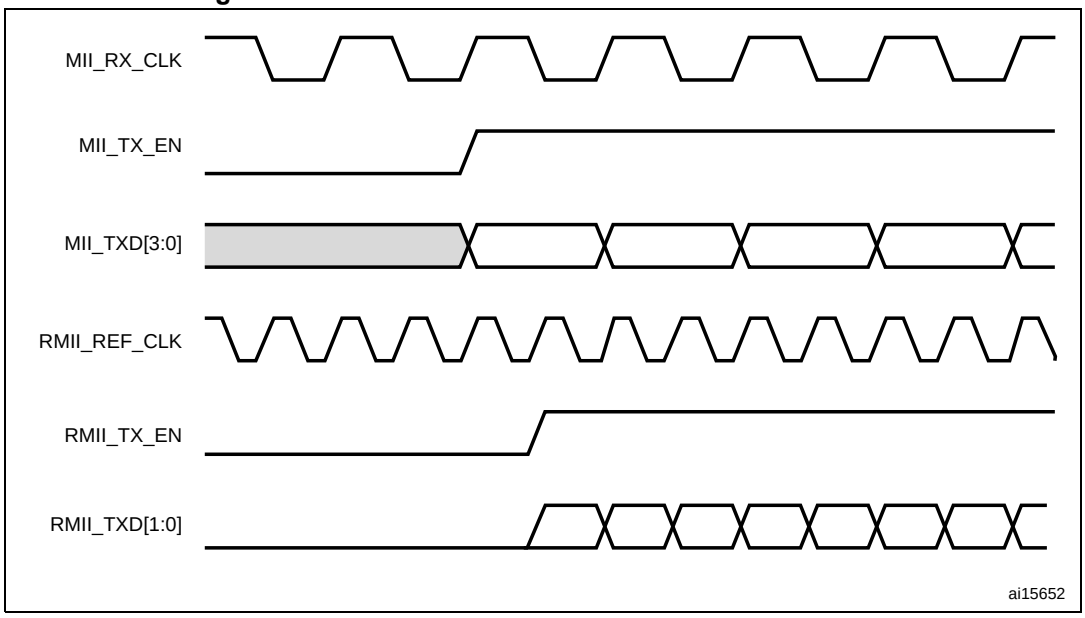

33.5.3 MAC frame reception

The MAC received frames are pushes into the Rx FIFO. The status (fill level) of this FIFO is indicated to the DMA once it crosses the configured receive threshold (RTC in the ETH_DMAOMR register) so that the DMA can initiate pre-configured burst transfers towards the AHB interface.

In the default Cut-through mode, when 64 bytes (configured with the RTC bits in the ETH_DMAOMR register) or a full packet of data are received into the FIFO, the data are popped out and the DMA is notified of its availability. Once the DMA has initiated the transfer to the AHB interface, the data transfer continues from the FIFO until a complete

packet has been transferred. Upon completion of the EOF frame transfer, the status word is popped out and sent to the DMA controller.

In Rx FIFO Store-and-forward mode (configured by the RSF bit in the ETH_DMAOMR register), a frame is read only after being written completely into the Receive FIFO. In this mode, all error frames are dropped (if the core is configured to do so) such that only valid frames are read and forwarded to the application. In Cut-through mode, some error frames are not dropped, because the error status is received at the end of the frame, by which time the start of that frame has already been read of the FIFO.

A receive operation is initiated when the MAC detects an SFD on the MII. The core strips the preamble and SFD before proceeding to process the frame. The header fields are checked for the filtering and the FCS field used to verify the CRC for the frame. The frame is dropped in the core if it fails the address filter.

Receive protocol

The received frame preamble and SFD are stripped. Once the SFD has been detected, the MAC starts sending the Ethernet frame data to the receive FIFO, beginning with the first byte following the SFD (destination address). If IEEE 1588 time stamping is enabled, a snapshot of the system time is taken when any frame's SFD is detected on the MII. Unless the MAC filters out and drops the frame, this time stamp is passed on to the application.

If the received frame length/type field is less than 0x600 and if the MAC is programmed for the auto CRC/pad stripping option, the MAC sends the data of the frame to RxFIFO up to the count specified in the length/type field, then starts dropping bytes (including the FCS field). If the Length/Type field is greater than or equal to 0x600, the MAC sends all received Ethernet frame data to Rx FIFO, regardless of the value on the programmed auto-CRC strip option. The MAC watchdog timer is enabled by default, that is, frames above 2048 bytes (DA + SA + LT + Data + pad + FCS) are cut off. This feature can be disabled by programming the watchdog disable (WD) bit in the MAC configuration register. However, even if the watchdog timer is disabled, frames greater than 16 KB in size are cut off and a watchdog timeout status is given.

Receive CRC: automatic CRC and pad stripping

The MAC checks for any CRC error in the receiving frame. It calculates the 32-bit CRC for the received frame that includes the Destination address field through the FCS field. The encoding is defined by the following polynomial.

$$G(x) = x^{32} + x^{26} + x^{23} + x^{22} + x^{16} + x^{12} + x^{11} + x^{10} + x^{8} + x^{7} + x^{5} + x^{4} + x^{2} + x + 1$$

Regardless of the auto-pad/CRC strip, the MAC receives the entire frame to compute the CRC check for the received frame.

Receive checksum offload

Both IPv4 and IPv6 frames in the received Ethernet frames are detected and processed for data integrity. You can enable the receive checksum offload by setting the IPCO bit in the ETH_MACCR register. The MAC receiver identifies IPv4 or IPv6 frames by checking for value 0x0800 or 0x86DD, respectively, in the received Ethernet frame Type field. This identification applies to VLAN-tagged frames as well. The receive checksum offload calculates IPv4 header checksums and checks that they match the received IPv4 header checksums. The IP Header Error bit is set for any mismatch between the indicated payload

type (Ethernet Type field) and the IP header version, or when the received frame does not have enough bytes, as indicated by the IPv4 header's Length field (or when fewer than 20 bytes are available in an IPv4 or IPv6 header). The receive checksum offload also identifies a TCP, UDP or ICMP payload in the received IP datagrams (IPv4 or IPv6) and calculates the checksum of such payloads properly, as defined in the TCP, UDP or ICMP specifications. It includes the TCP/UDP/ICMPv6 pseudo-header bytes for checksum calculation and checks whether the received checksum field matches the calculated value. The result of this operation is given as a Payload Checksum Error bit in the receive status word. This status bit is also set if the length of the TCP, UDP or ICMP payload does not match the expected payload length given in the IP header. As mentioned in *TCP/UDP/ICMP checksum*, the receive checksum offload bypasses the payload of fragmented IP datagrams, IP datagrams with security features, IPv6 routing headers, and payloads other than TCP, UDP or ICMP. This information (whether the checksum is bypassed or not) is given in the receive status, as described in the *RDES0: Receive descriptor Word0* section. In this configuration, the core does not append any payload checksum bytes to the received Ethernet frames.

As mentioned in *RDES0: Receive descriptor Word0*, the meaning of certain register bits changes as shown in *Table 190*.

Table 190. Frame statuses

Bit 18: Ethernet frame	Bit 27: Header checksum error	Bit 28: Payload checksum error	Frame status
0	0	0	The frame is an IEEE 802.3 frame (Length field value is less than 0x0600).
1	0	0	IPv4/IPv6 Type frame in which no checksum error is detected.
1	0	1	IPv4/IPv6 Type frame in which a payload checksum error (as described for PCE) is detected
1	1	0	IPv4/IPv6 Type frame in which IP header checksum error (as described for IPCO HCE) is detected.
1	1	1	IPv4/IPv6 Type frame in which both PCE and IPCO HCE are detected.
0	0	1	IPv4/IPv6 Type frame in which there is no IP HCE and the payload check is bypassed due to unsupported payload.
0	1	1	Type frame which is neither IPv4 or IPv6 (checksum offload bypasses the checksum check completely)
0	1	0	Reserved

Receive frame controller

If the RA bit is reset in the MAC CSR frame filter register, the MAC performs frame filtering based on the destination/source address (the application still needs to perform another level of filtering if it decides not to receive any bad frames like runt, CRC error frames, etc.). On detecting a filter-fail, the frame is dropped and not transferred to the application. When the filtering parameters are changed dynamically, and in case of (DA-SA) filter-fail, the rest of the frame is dropped and the Rx Status Word is immediately updated (with zero frame

length, CRC error and Runt Error bits set), indicating the filter fail. In Ethernet power down mode, all received frames are dropped, and are not forwarded to the application.

Receive flow control

The MAC detects the receiving Pause frame and pauses the frame transmission for the delay specified within the received Pause frame (only in Full-duplex mode). The Pause frame detection function can be enabled or disabled with the RFCE bit in ETH_MACFCR. Once receive flow control has been enabled, the received frame destination address begins to be monitored for any match with the multicast address of the control frame (0x0180 C200 0001). If a match is detected (the destination address of the received frame matches the reserved control frame destination address), the MAC then decides whether or not to transfer the received control frame to the application, based on the level of the PCF bit in ETH_MACFFR.

The MAC also decodes the type, opcode, and Pause Timer fields of the receiving control frame. If the byte count of the status indicates 64 bytes, and if there is no CRC error, the MAC transmitter pauses the transmission of any data frame for the duration of the decoded Pause time value, multiplied by the slot time (64 byte times for both 10/100 Mbit/s modes). Meanwhile, if another Pause frame is detected with a zero Pause time value, the MAC resets the Pause time and manages this new pause request.

If the received control frame matches neither the type field (0x8808), the opcode (0x00001), nor the byte length (64 bytes), or if there is a CRC error, the MAC does not generate a Pause.

In the case of a pause frame with a multicast destination address, the MAC filters the frame based on the address match.

For a pause frame with a unicast destination address, the MAC filtering depends on whether the DA matched the contents of the MAC address 0 register and whether the UPDF bit in ETH_MACFCR is set (detecting a pause frame even with a unicast destination address). The PCF register bits (bits [7:6] in ETH_MACFFR) control filtering for control frames in addition to address filtering.

Receive operation multiframe handling

Since the status is available immediately following the data, the FIFO is capable of storing any number of frames into it, as long as it is not full.

Error handling

If the Rx FIFO is full before it receives the EOF data from the MAC, an overflow is declared and the whole frame is dropped, and the overflow counter in the (ETH_DMAMFBOCR register) is incremented. The status indicates a partial frame due to overflow. The Rx FIFO can filter error and undersized frames, if enabled (using the FEF and FUGF bits in ETH_DMAOMR).
If the Receive FIFO is configured to operate in Store-and-forward mode, all error frames can be filtered and dropped.
In Cut-through mode, if a frame's status and length are available when that frame's SOF is read from the Rx FIFO, then the complete erroneous frame can be dropped. The DMA can flush the error frame being read from the FIFO, by enabling the receive frame flash bit. The data transfer to the application (DMA) is then stopped and the rest of the frame is internally read and dropped. The next frame transfer can then be started, if available.

Receive status word

At the end of the Ethernet frame reception, the MAC outputs the receive status to the application (DMA). The detailed description of the receive status is the same as for bits[31:0] in RDES0, given in *RDES0: Receive descriptor Word0*.

Frame length interface

In case of switch applications, data transmission and reception between the application and MAC happen as complete frame transfers. The application layer should be aware of the length of the frames received from the ingress port in order to transfer the frame to the egress port. The MAC core provides the frame length of each received frame inside the status at the end of each frame reception.

Note: A frame length value of 0 is given for partial frames written into the Rx FIFO due to overflow.

MII/RMII receive bit order

Each nibble is transmitted to the MII from the dibit received from the RMII in the nibble transmission order shown in *Figure 366*. The lower-order bits (D0 and D1) are received first, followed by the higher-order bits (D2 and D3).

Figure 366. Receive bit order

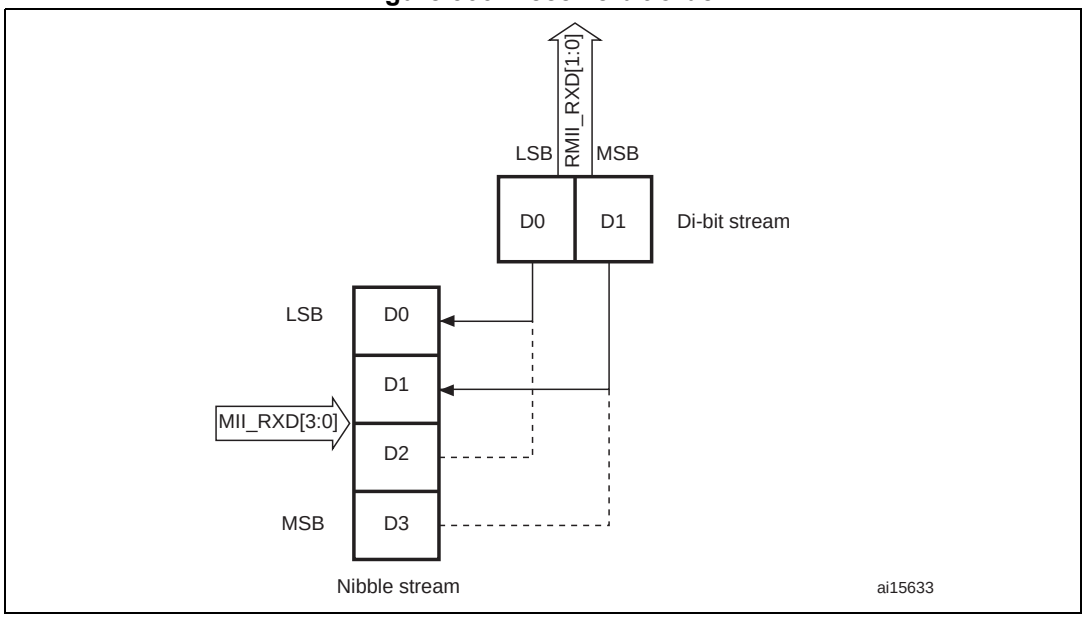

Figure 367. Reception with no error

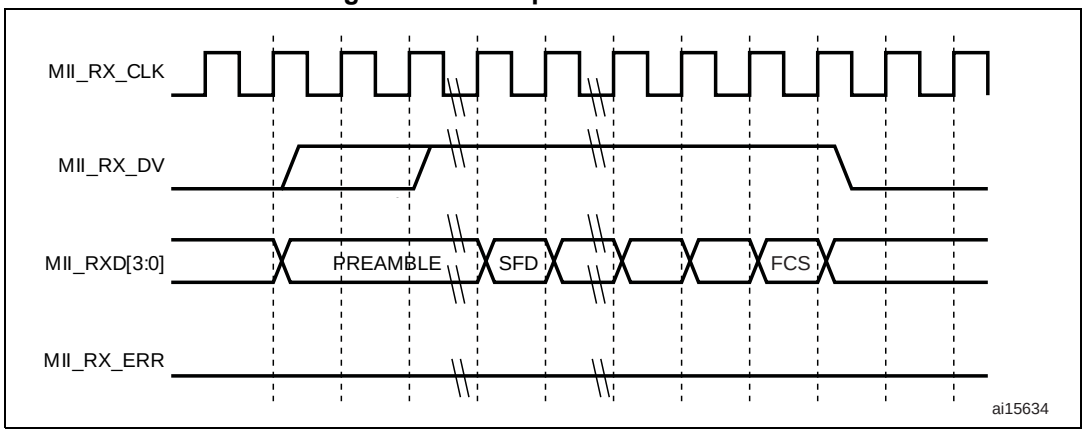

Figure 368. Reception with errors

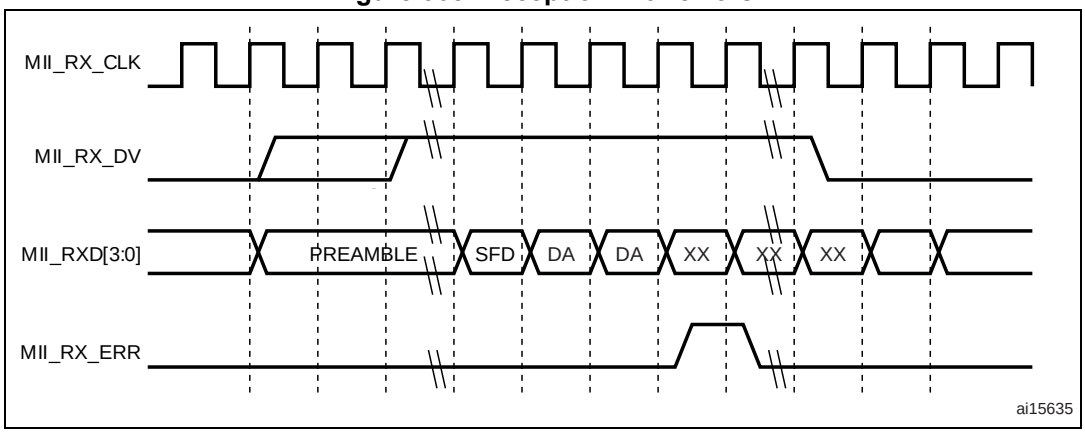

Figure 369. Reception with false carrier indication

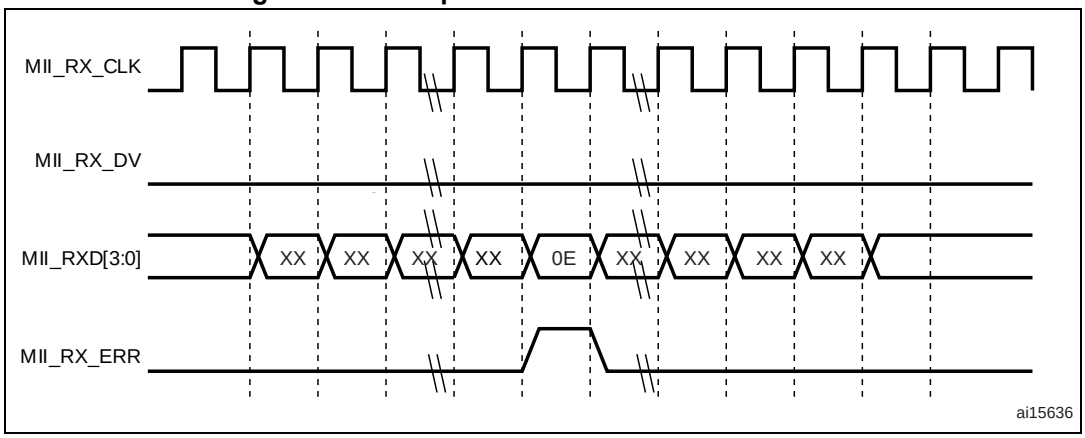

33.5.4 MAC interrupts

Interrupts can be generated from the MAC core as a result of various events.

The ETH_MACSR register describes the events that can cause an interrupt from the MAC core. You can prevent each event from asserting the interrupt by setting the corresponding mask bits in the Interrupt Mask register.

The interrupt register bits only indicate the block from which the event is reported. You have to read the corresponding status registers and other registers to clear the interrupt. For example, bit 3 of the Interrupt register, set high, indicates that the Magic packet or Wake-on-LAN frame is received in Power-down mode. You must read the ETH_MACPMTCSR Register to clear this interrupt event.

Figure 370. MAC core interrupt masking scheme

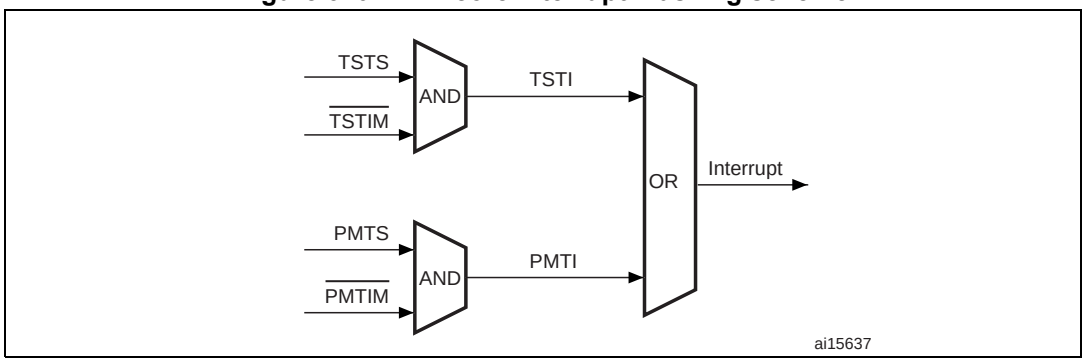

33.5.5 MAC filtering

Address filtering

Address filtering checks the destination and source addresses on all received frames and the address filtering status is reported accordingly. Address checking is based on different parameters (Frame filter register) chosen by the application. The filtered frame can also be identified: multicast or broadcast frame.

Address filtering uses the station's physical (MAC) address and the Multicast Hash table for address checking purposes.

Unicast destination address filter

The MAC supports up to 4 MAC addresses for unicast perfect filtering. If perfect filtering is selected (HU bit in the Frame filter register is reset), the MAC compares all 48 bits of the received unicast address with the programmed MAC address for any match. Default MacAddr0 is always enabled, other addresses MacAddr1–MacAddr3 are selected with an individual enable bit. Each byte of these other addresses (MacAddr1–MacAddr3) can be masked during comparison with the corresponding received DA byte by setting the corresponding Mask Byte Control bit in the register. This helps group address filtering for the DA. In Hash filtering mode (when HU bit is set), the MAC performs imperfect filtering for unicast addresses using a 64-bit Hash table. For hash filtering, the MAC uses the 6 upper CRC (see note 1 below) bits of the received destination address to index the content of the Hash table. A value of 000000 selects bit 0 in the selected register, and a value of 111111 selects bit 63 in the Hash Table register. If the corresponding bit (indicated by the 6-bit CRC) is set to 1, the unicast frame is said to have passed the Hash filter; otherwise, the frame has failed the Hash filter.

Note: This CRC is a 32-bit value coded by the following polynomial (for more details refer to Section 33.5.3):

$$G(x) = x^{32} + x^{26} + x^{23} + x^{22} + x^{16} + x^{12} + x^{11} + x^{10} + x^{8} + x^{7} + x^{5} + x^{4} + x^{2} + x + 1$$

Multicast destination address filter

The MAC can be programmed to pass all multicast frames by setting the PAM bit in the Frame filter register. If the PAM bit is reset, the MAC performs the filtering for multicast addresses based on the HM bit in the Frame filter register. In Perfect filtering mode, the multicast address is compared with the programmed MAC destination address registers (1–3). Group address filtering is also supported. In Hash filtering mode, the MAC performs imperfect filtering using a 64-bit Hash table. For hash filtering, the MAC uses the 6 upper CRC (see note 1 below) bits of the received multicast address to index the content of the Hash table. A value of 000000 selects bit 0 in the selected register and a value of 111111 selects bit 63 in the Hash Table register. If the corresponding bit is set to 1, then the multicast frame is said to have passed the Hash filter; otherwise, the frame has failed the Hash filter.

Note: This CRC is a 32-bit value coded by the following polynomial (for more details refer to Section 33.5.3):

$$G(x) = x^{32} + x^{26} + x^{23} + x^{22} + x^{16} + x^{12} + x^{11} + x^{10} + x^{8} + x^{7} + x^{5} + x^{4} + x^{2} + x + 1$$

Hash or perfect address filter

The DA filter can be configured to pass a frame when its DA matches either the Hash filter or the Perfect filter by setting the HPF bit in the Frame filter register and setting the corresponding HU or HM bits. This configuration applies to both unicast and multicast frames. If the HPF bit is reset, only one of the filters (Hash or Perfect) is applied to the received frame.

Broadcast address filter

The MAC does not filter any broadcast frames in the default mode. However, if the MAC is programmed to reject all broadcast frames by setting the BFD bit in the Frame filter register, any broadcast frames are dropped.

Unicast source address filter

The MAC can also perform perfect filtering based on the source address field of the received frames. By default, the MAC compares the SA field with the values programmed in the SA registers. The MAC address registers [1:3] can be configured to contain SA instead of DA for comparison, by setting bit 30 in the corresponding register. Group filtering with SA is also supported. The frames that fail the SA filter are dropped by the MAC if the SAF bit in the Frame filter register is set. Otherwise, the result of the SA filter is given as a status bit in the Receive Status word (see *RDES0: Receive descriptor Word0*).

When the SAF bit is set, the result of the SA and DA filters is AND'ed to decide whether the frame needs to be forwarded. This means that either of the filter fail result will drop the frame. Both filters have to pass the frame for the frame to be forwarded to the application.

Inverse filtering operation

For both destination and source address filtering, there is an option to invert the filter-match result at the final output. These are controlled by the DAIF and SAIF bits in the Frame filter register, respectively. The DAIF bit is applicable for both Unicast and Multicast DA frames. The result of the unicast/multicast destination address filter is inverted in this mode. Similarly, when the SAIF bit is set, the result of the unicast SA filter is inverted. *Table 191*

and *Table 192* summarize destination and source address filtering based on the type of frame received.

Table 191. Destination address filtering

Frame type	PM	HPF	HU	DAIF	HM	PAM	DB	DA filter operation
Broadcast	1	X	X	X	X	X	X	Pass
	0	X	X	X	X	X	0	Pass
	0	X	X	X	X	X	1	Fail
Unicast	1	X	X	X	X	X	X	Pass all frames
	0	X	0	0	X	X	X	Pass on perfect/group filter match
	0	X	0	1	X	X	X	Fail on perfect/Group filter match
	0	0	1	0	X	X	X	Pass on hash filter match
	0	0	1	1	X	X	X	Fail on hash filter match
	0	1	1	0	X	X	X	Pass on hash or perfect/Group filter match
	0	1	1	1	X	X	X	Fail on hash or perfect/Group filter match
Multicast	1	X	X	X	X	X	X	Pass all frames
	X	X	X	X	X	1	X	Pass all frames
	0	X	X	0	0	0	X	Pass on Perfect/Group filter match and drop PAUSE control frames if PCF = 0x
	0	0	X	0	1	0	X	Pass on hash filter match and drop PAUSE control frames if PCF = 0x
	0	1	X	0	1	0	X	Pass on hash or perfect/Group filter match and drop PAUSE control frames if PCF = 0x
	0	X	X	1	0	0	X	Fail on perfect/Group filter match and drop PAUSE control frames if PCF = 0x
	0	0	X	1	1	0	X	Fail on hash filter match and drop PAUSE control frames if PCF = 0x
	0	1	X	1	1	0	X	Fail on hash or perfect/Group filter match and drop PAUSE control frames if PCF = 0x

Table 192. Source address filtering

Frame type	PM	SAIF	SAF	SA filter operation
Unicast	1	X	X	Pass all frames
	0	0	0	Pass status on perfect/Group filter match but do not drop frames that fail
	0	1	0	Fail status on perfect/group filter match but do not drop frame
	0	0	1	Pass on perfect/group filter match and drop frames that fail
	0	1	1	Fail on perfect/group filter match and drop frames that fail

33.5.6 MAC loopback mode

The MAC supports loopback of transmitted frames onto its receiver. By default, the MAC loopback function is disabled, but this feature can be enabled by programming the Loopback bit in the MAC ETH_MACCR register.

33.5.7 MAC management counters: MMC

The MAC management counters (MMC) maintain a set of registers for gathering statistics on the received and transmitted frames. These include a control register for controlling the behavior of the registers, two 32-bit registers containing generated interrupts (receive and transmit), and two 32-bit registers containing masks for the Interrupt register (receive and transmit). These registers are accessible from the application. Each register is 32 bits wide.

Section 33.8 describes the various counters and lists the addresses of each of the statistics counters. This address is used for read/write accesses to the desired transmit/receive counter.

The Receive MMC counters are updated for frames that pass address filtering. Dropped frames statistics are not updated unless the dropped frames are runt frames of less than 6 bytes (DA bytes are not received fully).

Good transmitted and received frames

Transmitted frames are considered “good” if transmitted successfully. In other words, a transmitted frame is good if the frame transmission is not aborted due to any of the following errors:

+ Jabber Timeout
+ No Carrier/Loss of Carrier
+ Late Collision
+ Frame Underflow
+ Excessive Deferral
+ Excessive Collision

Received frames are considered “good” if none of the following errors exists:

+ CRC error
+ Runt Frame (shorter than 64 bytes)
+ Alignment error (in 10/ 100 Mbit/s only)
+ Length error (non-Type frames only)
+ Out of Range (non-Type frames only, longer than maximum size)
+ MII_RXER Input error

The maximum frame size depends on the frame type, as follows:

+ Untagged frame maxsize = 1518
+ VLAN Frame maxsize = 1522

33.5.8 Power management: PMT

This section describes the power management (PMT) mechanisms supported by the MAC. PMT supports the reception of network (remote) wakeup frames and Magic Packet frames. PMT generates interrupts for wakeup frames and Magic Packets received by the MAC. The PMT block is enabled with remote wakeup frame enable and Magic Packet enable. These enable bits (WFE and MPE) are in the ETH_MACPMTCSR register and are programmed by the application. When the power down mode is enabled in the PMT, then all received frames are dropped by the MAC and they are not forwarded to the application. The MAC comes out of the power down mode only when either a Magic Packet or a Remote wakeup frame is received and the corresponding detection is enabled.

Remote wakeup frame filter register

There are eight wakeup frame filter registers. To write on each of them, load the wakeup frame filter register value by value. The wanted values of the wakeup frame filter are loaded by sequentially loading eight times the wakeup frame filter register. The read operation is identical to the write operation. To read the eight values, you have to read eight times the wakeup frame filter register to reach the last register. Each read/write points the wakeup frame filter register to the next filter register.

Figure 371. Wakeup frame filter register

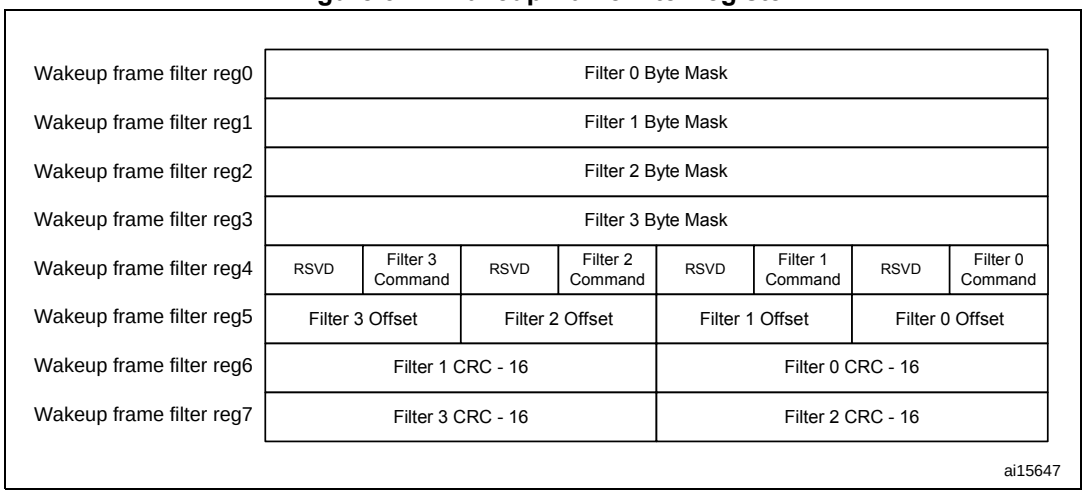

- Filter i Byte Mask

  This register defines which bytes of the frame are examined by filter i (0, 1, 2, and 3) in order to determine whether or not the frame is a wakeup frame. The MSB (thirty-first bit) must be zero. Bit j [30:0] is the Byte Mask. If bit j (byte number) of the Byte Mask is set, then Filter i Offset + j of the incoming frame is processed by the CRC block; otherwise Filter i Offset + j is ignored.
- Filter i Command

  This 4-bit command controls the filter i operation. Bit 3 specifies the address type, defining the pattern's destination address type. When the bit is set, the pattern applies to only multicast frames. When the bit is reset, the pattern applies only to unicast frames. Bit 2 and bit 1 are reserved. Bit 0 is the enable bit for filter i; if bit 0 is not set, filter i is disabled.
- Filter i Offset

  This register defines the offset (within the frame) from which the frames are examined by filter i. This 8-bit pattern offset is the offset for the filter i first byte to be examined. The minimum allowed is 12, which refers to the 13th byte of the frame (offset value 0 refers to the first byte of the frame).
- Filter i CRC-16

  This register contains the CRC_16 value calculated from the pattern, as well as the byte mask programmed to the wakeup filter register block.

Remote wakeup frame detection

When the MAC is in sleep mode and the remote wakeup bit is enabled in the ETH_MACPMTCSR register, normal operation is resumed after receiving a remote wakeup frame. The application writes all eight wakeup filter registers, by performing a sequential write to the wakeup frame filter register address. The application enables remote wakeup by writing a 1 to bit 2 in the ETH_MACPMTCSR register. PMT supports four programmable filters that provide different receive frame patterns. If the incoming frame passes the address filtering of Filter Command, and if Filter CRC-16 matches the incoming examined pattern, then the wakeup frame is received. Filter_offset (minimum value 12, which refers to the 13th byte of the frame) determines the offset from which the frame is to be examined. Filter Byte Mask determines which bytes of the frame must be examined. The thirty-first bit of Byte Mask must be set to zero. The wakeup frame is checked only for length error, FCS error, dribble bit error, MII error, collision, and to ensure that it is not a runt frame. Even if the wakeup frame is more than 512 bytes long, if the frame has a valid CRC value, it is considered valid. Wakeup frame detection is updated in the ETH_MACPMTCSR register for every remote wakeup frame received. If enabled, a PMT interrupt is generated to indicate the reception of a remote wakeup frame.

Magic packet detection

The Magic Packet frame is based on a method that uses Advanced Micro Device's Magic Packet technology to power up the sleeping device on the network. The MAC receives a specific packet of information, called a Magic Packet, addressed to the node on the network. Only Magic Packets that are addressed to the device or a broadcast address are checked to determine whether they meet the wakeup requirements. Magic Packets that pass address filtering (unicast or broadcast) are checked to determine whether they meet the remote Wake-on-LAN data format of 6 bytes of all ones followed by a MAC address appearing 16 times. The application enables Magic Packet wakeup by writing a 1 to bit 1 in the ETH_MACPMTCSR register. The PMT block constantly monitors each frame addressed to

the node for a specific Magic Packet pattern. Each received frame is checked for a 0xFFFF FFFF FFFF pattern following the destination and source address field. The PMT block then checks the frame for 16 repetitions of the MAC address without any breaks or interruptions. In case of a break in the 16 repetitions of the address, the 0xFFFF FFFF FFFF pattern is scanned for again in the incoming frame. The 16 repetitions can be anywhere in the frame, but must be preceded by the synchronization stream (0xFFFF FFFF FFFF). The device also accepts a multicast frame, as long as the 16 duplications of the MAC address are detected. If the MAC address of a node is 0x0011 2233 4455, then the MAC scans for the data sequence:

Destination address source address …….. FFFF FFFF FFFF
0011 2233 4455 0011 2233 4455 0011 2233 4455 0011 2233 4455
0011 2233 4455 0011 2233 4455 0011 2233 4455 0011 2233 4455
0011 2233 4455 0011 2233 4455 0011 2233 4455 0011 2233 4455
0011 2233 4455 0011 2233 4455 0011 2233 4455 0011 2233 4455
…CRC

Magic Packet detection is updated in the ETH_MACPMTCSR register for received Magic Packet. If enabled, a PMT interrupt is generated to indicate the reception of a Magic Packet.

System consideration during power-down

The Ethernet PMT block is able to detect frames while the system is in the Stop mode, provided that the EXTI line 19 is enabled.

The MAC receiver state machine should remain enabled during the power-down mode. This means that the RE bit has to remain set in the ETH_MACCR register because it is involved in magic packet/ wake-on-LAN frame detection. The transmit state machine should however be turned off during the power-down mode by clearing the TE bit in the ETH_MACCR register. Moreover, the Ethernet DMA should be disabled during the power-down mode, because it is not necessary to copy the magic packet/wake-on-LAN frame into the SRAM. To disable the Ethernet DMA, clear the ST bit and the SR bit (for the transmit DMA and the receive DMA, respectively) in the ETH_DMAOMR register.

The recommended power-down and wakeup sequences are as follows:

1. Disable the transmit DMA and wait for any previous frame transmissions to complete. These transmissions can be detected when the transmit interrupt ETH_DMASR register[0] is received.
2. Disable the MAC transmitter and MAC receiver by clearing the RE and TE bits in the ETH_MACCR configuration register.
3. Wait for the receive DMA to have emptied all the frames in the Rx FIFO.
4. Disable the receive DMA.
5. Configure and enable the EXTI line 19 to generate either an event or an interrupt.
6. If you configure the EXTI line 19 to generate an interrupt, you also have to correctly configure the ETH_WKUP_IRQ Handler function, which should clear the pending bit of the EXTI line 19.
7. Enable Magic packet/Wake-on-LAN frame detection by setting the MFE/ WFE bit in the ETH_MACPMTCSR register.
8. Enable the MAC power-down mode, by setting the PD bit in the ETH_MACPMTCSR register.
9. Enable the MAC Receiver by setting the RE bit in the ETH_MACCR register.
10. Enter the system's Stop mode (for more details refer to *Section 5.3.4*):
11. On receiving a valid wakeup frame, the Ethernet peripheral exits the power-down mode.
12. Read the ETH_MACPMTCSR to clear the power management event flag, enable the MAC transmitter state machine, and the receive and transmit DMA.
13. Configure the system clock: enable the HSE and set the clocks.

33.5.9 Precision time protocol (IEEE1588 PTP)

The IEEE 1588 standard defines a protocol that allows precise clock synchronization in measurement and control systems implemented with technologies such as network communication, local computing and distributed objects. The protocol applies to systems that communicate by local area networks supporting multicast messaging, including (but not limited to) Ethernet. This protocol is used to synchronize heterogeneous systems that include clocks of varying inherent precision, resolution and stability. The protocol supports system-wide synchronization accuracy in the submicrosecond range with minimum network and local clock computing resources. The message-based protocol, known as the precision time protocol (PTP), is transported over UDP/IP. The system or network is classified into Master and Slave nodes for distributing the timing/clock information. The protocol's technique for synchronizing a slave node to a master node by exchanging PTP messages is described in *Figure 372*.

Figure 372. Networked time synchronization

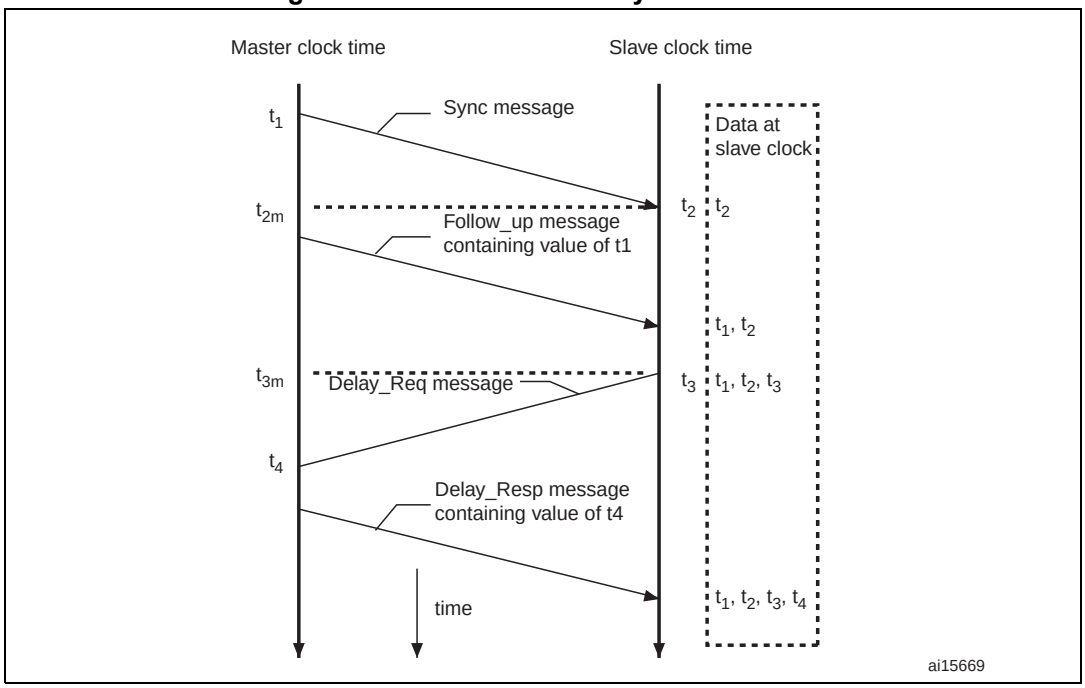

1. The master broadcasts PTP Sync messages to all its nodes. The Sync message contains the master's reference time information. The time at which this message leaves the master's system is t_1. For Ethernet ports, this time has to be captured at the MII.
2. A slave receives the Sync message and also captures the exact time, t_2, using its timing reference.
3. The master then sends the slave a Follow_up message, which contains the t_1 information for later use.
4. The slave sends the master a Delay_Req message, noting the exact time, t_3, at which this frame leaves the MII.
5. The master receives this message and captures the exact time, t_4, at which it enters its system.
6. The master sends the t_4 information to the slave in the Delay_Resp message.
7. The slave uses the four values of t_1, t_2, t_3, and t_4 to synchronize its local timing reference to the master's timing reference.

Most of the protocol implementation occurs in the software, above the UDP layer. As described above, however, hardware support is required to capture the exact time when specific PTP packets enter or leave the Ethernet port at the MII. This timing information has to be captured and returned to the software for a proper, high-accuracy implementation of PTP.

Reference timing source

To get a snapshot of the time, the core requires a reference time in 64-bit format (split into two 32-bit channels, with the upper 32 bits providing time in seconds, and the lower 32 bits indicating time in nanoseconds) as defined in the IEEE 1588 specification.

The PTP reference clock input is used to internally generate the reference time (also called the System Time) and to capture time stamps. The frequency of this reference clock must

be greater than or equal to the resolution of time stamp counter. The synchronization accuracy target between the master node and the slaves is around 100 ns.

The generation, update and modification of the System Time are described in *System Time correction methods*.

The accuracy depends on the PTP reference clock input period, the characteristics of the oscillator (drift) and the frequency of the synchronization procedure.

Due to the synchronization from the Tx and Rx clock input domain to the PTP reference clock domain, the uncertainty on the time stamp latched value is 1 reference clock period. If we add the uncertainty due to resolution, we will add half the period for time stamping.

Transmission of frames with the PTP feature

When a frame's SFD is output on the MII, a time stamp is captured. Frames for which time stamp capture is required are controllable on a per-frame basis. In other words, each transmitted frame can be marked to indicate whether a time stamp must be captured or not for that frame. The transmitted frames are not processed to identify PTP frames. Frame control is exercised through the control bits in the transmit descriptor. Captured time stamps are returned to the application in the same way as the status is provided for frames. The time stamp is sent back along with the Transmit status of the frame, inside the corresponding transmit descriptor, thus connecting the time stamp automatically to the specific PTP frame. The 64-bit time stamp information is written back to the TDES2 and TDES3 fields, with TDES2 holding the time stamp's 32 least significant bits.

Reception of frames with the PTP feature

When the IEEE 1588 time stamping feature is enabled, the Ethernet MAC captures the time stamp of all frames received on the MII. The MAC provides the time stamp as soon as the frame reception is complete. Captured time stamps are returned to the application in the same way as the frame status is provided. The time stamp is sent back along with the Receive status of the frame, inside the corresponding receive descriptor. The 64-bit time stamp information is written back to the RDES2 and RDES3 fields, with RDES2 holding the time stamp's 32 least significant bits.

System Time correction methods

The 64-bit PTP time is updated using the PTP input reference clock, HCLK. This PTP time is used as a source to take snapshots (time stamps) of the Ethernet frames being transmitted or received at the MII. The System Time counter can be initialized or corrected using either the Coarse or the Fine correction method.

In the Coarse correction method, the initial value or the offset value is written to the Time stamp update register (refer to *Section 33.8.3*). For initialization, the System Time counter is written with the value in the Time stamp update registers, whereas for system time correction, the offset value (Time stamp update register) is added to or subtracted from the system time.

In the Fine correction method, the slave clock (reference clock) frequency drift with respect to the master clock (as defined in IEEE 1588) is corrected over a period of time, unlike in the Coarse correction method where it is corrected in a single clock cycle. The longer correction time helps maintain linear time and does not introduce drastic changes (or a large jitter) in the reference time between PTP Sync message intervals. In this method, an accumulator sums up the contents of the Addend register as shown in *Figure 373*. The arithmetic carry that the accumulator generates is used as a pulse to increment the system time counter.

The accumulator and the addend are 32-bit registers. Here, the accumulator acts as a high-precision frequency multiplier or divider. *Figure 373* shows this algorithm.

Figure 373. System time update using the Fine correction method

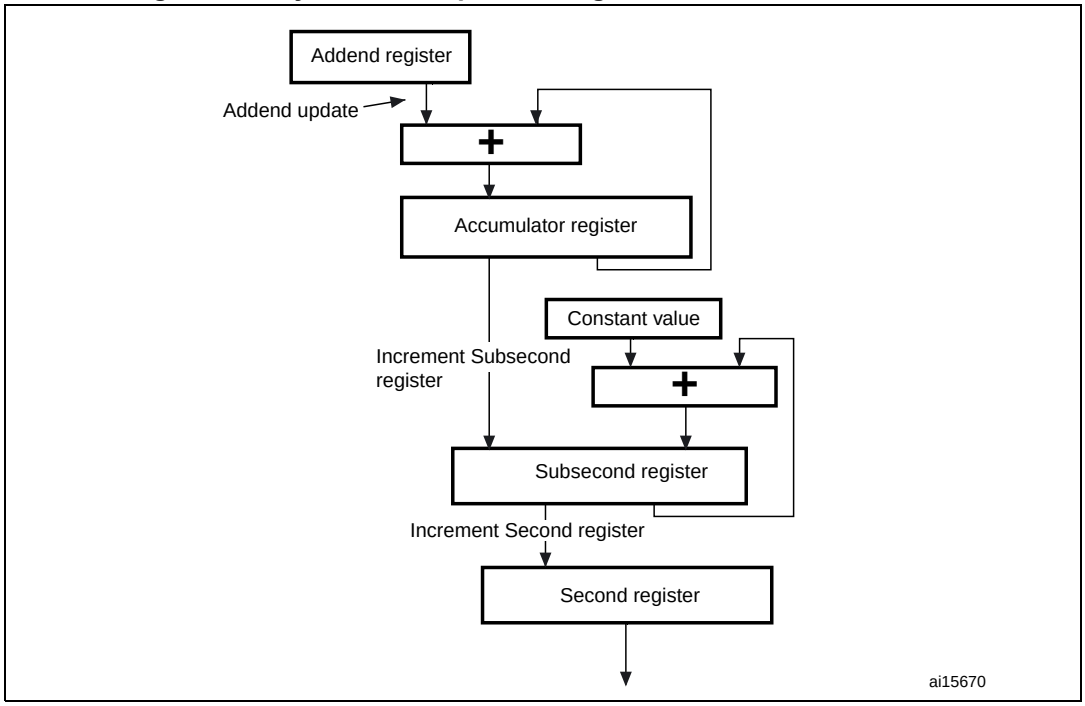

The system time update logic requires a 50 MHz clock frequency to achieve 20 ns accuracy. The frequency division is the ratio of the reference clock frequency to the required clock frequency. Hence, if the reference clock (HCLK) is, let us say, 66 MHz, the ratio is calculated as 66 MHz/50 MHz = 1.32. Hence, the default addend value to be set in the register is 2^{32}/1.32, which is equal to 0xC1F0 7C1F.

If the reference clock drifts lower, to 65 MHz for example, the ratio is 65/50 or 1.3 and the value to set in the addend register is 2^{32}/1.30 equal to 0xC4EC 4EC4. If the clock drifts higher, to 67 MHz for example, the addend register must be set to 0xBF0 B7672. When the clock drift is zero, the default addend value of 0xC1F0 7C1F (2^{32}/1.32) should be programmed.

In *Figure 373*, the constant value used to increment the subsecond register is 0d43. This makes an accuracy of 20 ns in the system time (in other words, it is incremented by 20 ns steps).

The software has to calculate the drift in frequency based on the Sync messages, and to update the Addend register accordingly. Initially, the slave clock is set with FreqCompensationValue0 in the Addend register. This value is as follows:

$$\text{FreqCompensationValue0} = 2^{32} / \text{FreqDivisionRatio}$$

If MasterToSlaveDelay is initially assumed to be the same for consecutive Sync messages, the algorithm described below must be applied. After a few Sync cycles, frequency lock occurs. The slave clock can then determine a precise MasterToSlaveDelay value and re-synchronize with the master using the new value.

The algorithm is as follows:

- At time MasterSyncTime (n) the master sends the slave clock a Sync message. The slave receives this message when its local clock is SlaveClockTime (n) and computes MasterClockTime (n) as:

  MasterClockTime (n) = MasterSyncTime (n) + MasterToSlaveDelay (n)
- The master clock count for current Sync cycle, MasterClockCount (n) is given by:

  MasterClockCount (n) = MasterClockTime (n) – MasterClockTime (n – 1) (assuming that MasterToSlaveDelay is the same for Sync cycles n and n – 1)
- The slave clock count for current Sync cycle, SlaveClockCount (n) is given by:

  SlaveClockCount (n) = SlaveClockTime (n) – SlaveClockTime (n – 1)
- The difference between master and slave clock counts for current Sync cycle, ClockDiffCount (n) is given by:

  ClockDiffCount (n) = MasterClockCount (n) – SlaveClockCount (n)
- The frequency-scaling factor for slave clock, FreqScaleFactor (n) is given by:

  FreqScaleFactor (n) = (MasterClockCount (n) + ClockDiffCount (n)) / SlaveClockCount (n)
- The frequency compensation value for Addend register, FreqCompensationValue (n) is given by:

  FreqCompensationValue (n) = FreqScaleFactor (n) × FreqCompensationValue (n – 1)

In theory, this algorithm achieves lock in one Sync cycle; however, it may take several cycles, due to changing network propagation delays and operating conditions.

This algorithm is self-correcting: if for any reason the slave clock is initially set to a value from the master that is incorrect, the algorithm corrects it at the cost of more Sync cycles.

Programming steps for system time generation initialization

The time stamping feature can be enabled by setting bit 0 in the Time stamp control register (ETH__PTPTSCR). However, it is essential to initialize the time stamp counter after this bit is set to start time stamp operation. The proper sequence is the following:

1. Mask the Time stamp trigger interrupt by setting bit 9 in the MACIMR register.
2. Program Time stamp register bit 0 to enable time stamping.
3. Program the Subsecond increment register based on the PTP clock frequency.
4. If you are using the Fine correction method, program the Time stamp addend register and set Time stamp control register bit 5 (addend register update).
5. Poll the Time stamp control register until bit 5 is cleared.
6. To select the Fine correction method (if required), program Time stamp control register bit 1.
7. Program the Time stamp high update and Time stamp low update registers with the appropriate time value.
8. Set Time stamp control register bit 2 (Time stamp init).
9. The Time stamp counter starts operation as soon as it is initialized with the value written in the Time stamp update register.
10. Enable the MAC receiver and transmitter for proper time stamping.

Note: If time stamp operation is disabled by clearing bit 0 in the ETH_PTPTSCR register, the above steps must be repeated to restart the time stamp operation.

Programming steps for system time update in the Coarse correction method

To synchronize or update the system time in one process (coarse correction method), perform the following steps:

1. Write the offset (positive or negative) in the Time stamp update high and low registers.
2. Set bit 3 (TSSTU) in the Time stamp control register.
3. The value in the Time stamp update registers is added to or subtracted from the system time when the TSSTU bit is cleared.

Programming steps for system time update in the Fine correction method

To synchronize or update the system time to reduce system-time jitter (fine correction method), perform the following steps:

1. With the help of the algorithm explained in *System Time correction methods*, calculate the rate by which you want to speed up or slow down the system time increments.
2. Update the time stamp.
3. Wait the time you want the new value of the Addend register to be active. You can do this by activating the Time stamp trigger interrupt after the system time reaches the target value.
4. Program the required target time in the Target time high and low registers. Unmask the Time stamp interrupt by clearing bit 9 in the ETH_MACIMR register.
5. Set Time stamp control register bit 4 (TSARU).
6. When this trigger causes an interrupt, read the ETH_MACSR register.
7. Reprogram the Time stamp addend register with the old value and set ETH_TPTSCR bit 5 again.

PTP trigger internal connection with TIM2

The MAC provides a trigger interrupt when the system time becomes greater than the target time. Using an interrupt introduces a known latency plus an uncertainty in the command execution time.

In order to avoid this uncertainty, a PTP trigger output signal is set high when the system time is greater than the target time. It is internally connected to the TIM2 input trigger. With this signal, the input capture feature, the output compare feature and the waveforms of the timer can be used, triggered by the synchronized PTP system time. No uncertainty is introduced since the clock of the timer (PCLK1: TIM2 APB1 clock) and PTP reference clock (HCLK) are synchronous.
This PTP trigger signal is connected to the TIM2 ITR1 input selectable by software. The connection is enabled through bits 11 and 10 in the TIM2 option register (TIM2_OR). *Figure 374* shows the connection.

Figure 374. PTP trigger output to TIM2 ITR1 connection

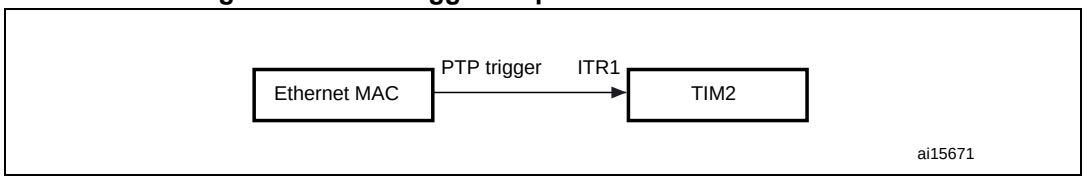

PTP pulse-per-second output signal

This PTP pulse output is used to check the synchronization between all nodes in the network. To be able to test the difference between the local slave clock and the master reference clock, both clocks were given a pulse-per-second (PPS) output signal that may be connected to an oscilloscope if necessary. The deviation between the two signals can therefore be measured. The pulse width of the PPS output is 125 ms.

The PPS output is enabled through a GPIO alternate function. (GPIO_AFR register).

The default frequency of the PPS output is 1 Hz. PPSFREQ[3:0] (in ETH_PTPPPSCR) can be used to set the frequency of the PPS output to $2^{PPSFREQ}$ Hz.

When set to 1 Hz, the PPS pulse width is 125 ms with binary rollover (TSSSR=0, bit 9 in ETH_PTPTSCR) and 100 ms with digital rollover (TSSSR=1). When set to 2 Hz and higher, the duty cycle of the PPS output is 50% with binary rollover.

With digital rollover (TSSSR=1), it is recommended not to use the PPS output with a frequency other than 1 Hz as it would have irregular waveforms (though its average frequency would always be correct during any one-second window).

Figure 375. PPS output

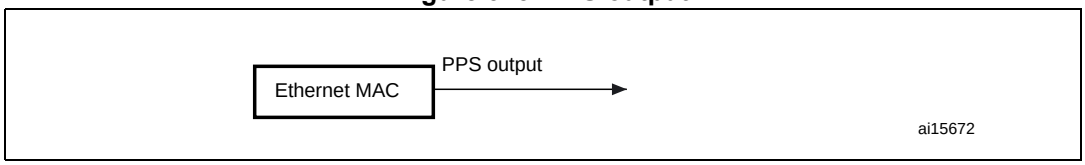

33.6 Ethernet functional description: DMA controller operation

The DMA has independent transmit and receive engines, and a CSR space. The transmit engine transfers data from system memory into the Tx FIFO while the receive engine transfers data from the Rx FIFO into system memory. The controller utilizes descriptors to efficiently move data from source to destination with minimum CPU intervention. The DMA is designed for packet-oriented data transfers such as frames in Ethernet. The controller can be programmed to interrupt the CPU in cases such as frame transmit and receive transfer completion, and other normal/error conditions. The DMA and the STM32F4xx communicate through two data structures:

- Control and status registers (CSR)
- Descriptor lists and data buffers.

Control and status registers are described in detail in *Section 33.8*. Descriptors are described in detail in *Normal Tx DMA descriptors*.

The DMA transfers the received data frames to the receive buffer in the STM32F4xx memory, and transmits data frames from the transmit buffer in the STM32F4xx memory. Descriptors that reside in the STM32F4xx memory act as pointers to these buffers. There are two descriptor lists: one for reception, and one for transmission. The base address of each list is written into DMA Registers 3 and 4, respectively. A descriptor list is forward-linked (either implicitly or explicitly). The last descriptor may point back to the first entry to create a ring structure. Explicit chaining of descriptors is accomplished by configuring the second address chained in both the receive and transmit descriptors (RDES1[14] and TDES0[20]). The descriptor lists reside in the Host's physical memory space. Each descriptor can point to a maximum of two buffers. This enables the use of two physically

addressed buffers, instead of two contiguous buffers in memory. A data buffer resides in the Host's physical memory space, and consists of an entire frame or part of a frame, but cannot exceed a single frame. Buffers contain only data. The buffer status is maintained in the descriptor. Data chaining refers to frames that span multiple data buffers. However, a single descriptor cannot span multiple frames. The DMA skips to the next frame buffer when the end of frame is detected. Data chaining can be enabled or disabled. The descriptor ring and chain structure is shown in *Figure 376*.

Figure 376. Descriptor ring and chain structure

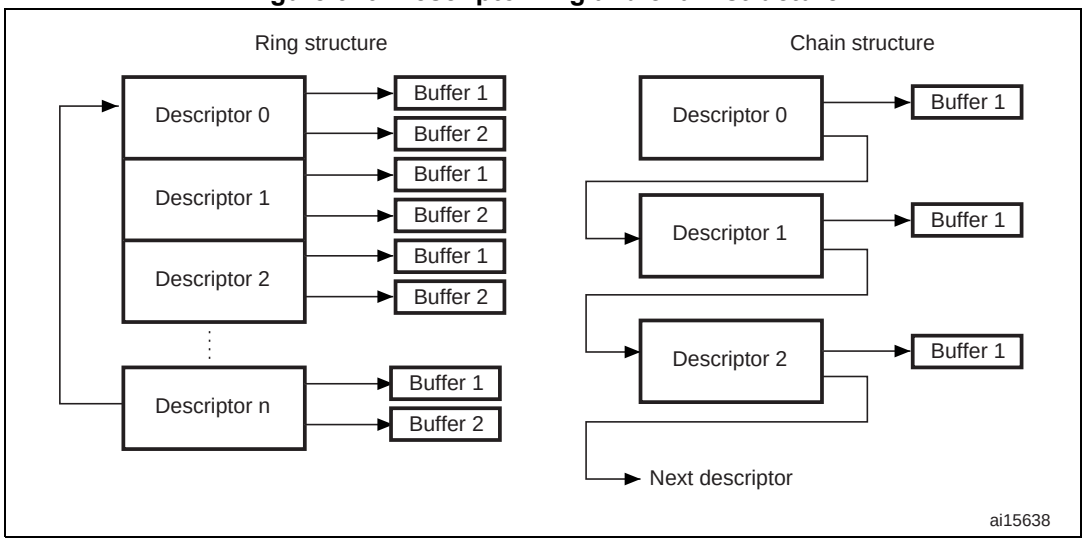

33.6.1 Initialization of a transfer using DMA

Initialization for the MAC is as follows:

1. Write to ETH_DMABMR to set STM32F4xx bus access parameters.
2. Write to the ETH_DMAIER register to mask unnecessary interrupt causes.
3. The software driver creates the transmit and receive descriptor lists. Then it writes to both the ETH_DMARDLAR and ETH_DMATDLAR registers, providing the DMA with the start address of each list.
4. Write to MAC Registers 1, 2, and 3 to choose the desired filtering options.
5. Write to the MAC ETH_MACCR register to configure and enable the transmit and receive operating modes. The PS and DM bits are set based on the auto-negotiation result (read from the PHY).
6. Write to the ETH_DMAOMR register to set bits 13 and 1 and start transmission and reception.
7. The transmit and receive engines enter the running state and attempt to acquire descriptors from the respective descriptor lists. The receive and transmit engines then begin processing receive and transmit operations. The transmit and receive processes are independent of each other and can be started or stopped separately.

33.6.2 Host bus burst access

The DMA attempts to execute fixed-length burst transfers on the AHB master interface if configured to do so (FB bit in ETH_DMABMR). The maximum burst length is indicated and limited by the PBL field (ETH_DMABMR [13:8]). The receive and transmit descriptors are

always accessed in the maximum possible burst size (limited by PBL) for the 16 bytes to be read.

The Transmit DMA initiates a data transfer only when there is sufficient space in the Transmit FIFO to accommodate the configured burst or the number of bytes until the end of frame (when it is less than the configured burst length). The DMA indicates the start address and the number of transfers required to the AHB Master Interface. When the AHB Interface is configured for fixed-length burst, then it transfers data using the best combination of INCR4, INCR8, INCR16 and SINGLE transactions. Otherwise (no fixed-length burst), it transfers data using INCR (undefined length) and SINGLE transactions.

The Receive DMA initiates a data transfer only when sufficient data for the configured burst is available in Receive FIFO or when the end of frame (when it is less than the configured burst length) is detected in the Receive FIFO. The DMA indicates the start address and the number of transfers required to the AHB master interface. When the AHB interface is configured for fixed-length burst, then it transfers data using the best combination of INCR4, INCR8, INCR16 and SINGLE transactions. If the end of frame is reached before the fixed-burst ends on the AHB interface, then dummy transfers are performed in order to complete the fixed-length burst. Otherwise (FB bit in ETH_DMABMR is reset), it transfers data using INCR (undefined length) and SINGLE transactions.

When the AHB interface is configured for address-aligned beats, both DMA engines ensure that the first burst transfer the AHB initiates is less than or equal to the size of the configured PBL. Thus, all subsequent beats start at an address that is aligned to the configured PBL. The DMA can only align the address for beats up to size 16 (for PBL > 16), because the AHB interface does not support more than INCR16.

33.6.3 Host data buffer alignment

The transmit and receive data buffers do not have any restrictions on start address alignment. In our system with 32-bit memory, the start address for the buffers can be aligned to any of the four bytes. However, the DMA always initiates transfers with address aligned to the bus width with dummy data for the byte lanes not required. This typically happens during the transfer of the beginning or end of an Ethernet frame.

- Example of buffer read:

  If the Transmit buffer address is 0x0000 0FF2, and 15 bytes need to be transferred, then the DMA will read five full words from address 0x0000 0FF0, but when transferring data to the Transmit FIFO, the extra bytes (the first two bytes) will be dropped or ignored. Similarly, the last 3 bytes of the last transfer will also be ignored. The DMA always ensures it transfers a full 32-bit data items to the Transmit FIFO, unless it is the end of frame.

- Example of buffer write:

  If the Receive buffer address is 0x0000 0FF2, and 16 bytes of a received frame need to be transferred, then the DMA will write five full 32-bit data items from address 0x0000 0FF0. But the first 2 bytes of the first transfer and the last 2 bytes of the third transfer will have dummy data.

33.6.4 Buffer size calculations

The DMA does not update the size fields in the transmit and receive descriptors. The DMA updates only the status fields (xDES0) of the descriptors. The driver has to calculate the sizes. The transmit DMA transfers the exact number of bytes (indicated by buffer size field in TDES1) towards the MAC core. If a descriptor is marked as first (FS bit in TDES0 is set),

then the DMA marks the first transfer from the buffer as the start of frame. If a descriptor is marked as last (LS bit in TDES0), then the DMA marks the last transfer from that data buffer as the end of frame. The receive DMA transfers data to a buffer until the buffer is full or the end of frame is received. If a descriptor is not marked as last (LS bit in RDES0), then the buffer(s) that correspond to the descriptor are full and the amount of valid data in a buffer is accurately indicated by the buffer size field minus the data buffer pointer offset when the descriptor's FS bit is set. The offset is zero when the data buffer pointer is aligned to the databus width. If a descriptor is marked as last, then the buffer may not be full (as indicated by the buffer size in RDES1). To compute the amount of valid data in this final buffer, the driver must read the frame length (FL bits in RDES0[29:16]) and subtract the sum of the buffer sizes of the preceding buffers in this frame. The receive DMA always transfers the start of next frame with a new descriptor.

Note: Even when the start address of a receive buffer is not aligned to the system databus width the system should allocate a receive buffer of a size aligned to the system bus width. For example, if the system allocates a 1024 byte (1 KB) receive buffer starting from address 0x1000, the software can program the buffer start address in the receive descriptor to have a 0x1002 offset. The receive DMA writes the frame to this buffer with dummy data in the first two locations (0x1000 and 0x1001). The actual frame is written from location 0x1002. Thus, the actual useful space in this buffer is 1022 bytes, even though the buffer size is programmed as 1024 bytes, due to the start address offset.

33.6.5 DMA arbiter

The arbiter inside the DMA takes care of the arbitration between transmit and receive channel accesses to the AHB master interface. Two types of arbitrations are possible: round-robin, and fixed-priority. When round-robin arbitration is selected (DA bit in ETH_DMABMR is reset), the arbiter allocates the databus in the ratio set by the PM bits in ETH_DMABMR, when both transmit and receive DMAs request access simultaneously. When the DA bit is set, the receive DMA always gets priority over the transmit DMA for data access.

33.6.6 Error response to DMA

For any data transfer initiated by a DMA channel, if the slave replies with an error response, that DMA stops all operations and updates the error bits and the fatal bus error bit in the Status register (ETH_DMASR register). That DMA controller can resume operation only after soft- or hard-resetting the peripheral and re-initializing the DMA.

33.6.7 Tx DMA configuration

TxDMA operation: default (non-OSF) mode

The transmit DMA engine in default mode proceeds as follows:

1. The user sets up the transmit descriptor (TDES0-TDES3) and sets the OWN bit (TDES0[31]) after setting up the corresponding data buffer(s) with Ethernet frame data.
2. Once the ST bit (ETH_DMAOMR register[13]) is set, the DMA enters the Run state.
3. While in the Run state, the DMA polls the transmit descriptor list for frames requiring transmission. After polling starts, it continues in either sequential descriptor ring order or chained order. If the DMA detects a descriptor flagged as owned by the CPU, or if an error condition occurs, transmission is suspended and both the Transmit Buffer

Unavailable (ETH_DMASR register[2]) and Normal Interrupt Summary (ETH_DMASR register[16]) bits are set. The transmit engine proceeds to Step 9.

4. If the acquired descriptor is flagged as owned by DMA (TDES0[31] is set), the DMA decodes the transmit data buffer address from the acquired descriptor.
5. The DMA fetches the transmit data from the STM32F4xx memory and transfers the data.
6. If an Ethernet frame is stored over data buffers in multiple descriptors, the DMA closes the intermediate descriptor and fetches the next descriptor. Steps 3, 4, and 5 are repeated until the end of Ethernet frame data is transferred.
7. When frame transmission is complete, if IEEE 1588 time stamping was enabled for the frame (as indicated in the transmit status) the time stamp value is written to the transmit descriptor (TDES2 and TDES3) that contains the end-of-frame buffer. The status information is then written to this transmit descriptor (TDES0). Because the OWN bit is cleared during this step, the CPU now owns this descriptor. If time stamping was not enabled for this frame, the DMA does not alter the contents of TDES2 and TDES3.
8. Transmit Interrupt (ETH_DMASR register [0]) is set after completing the transmission of a frame that has Interrupt on Completion (TDES1[31]) set in its last descriptor. The DMA engine then returns to Step 3.
9. In the Suspend state, the DMA tries to re-acquire the descriptor (and thereby returns to Step 3) when it receives a transmit poll demand, and the Underflow Interrupt Status bit is cleared.

Figure 377 shows the TxDMA transmission flow in default mode.

Figure 377. TxDMA operation in Default mode

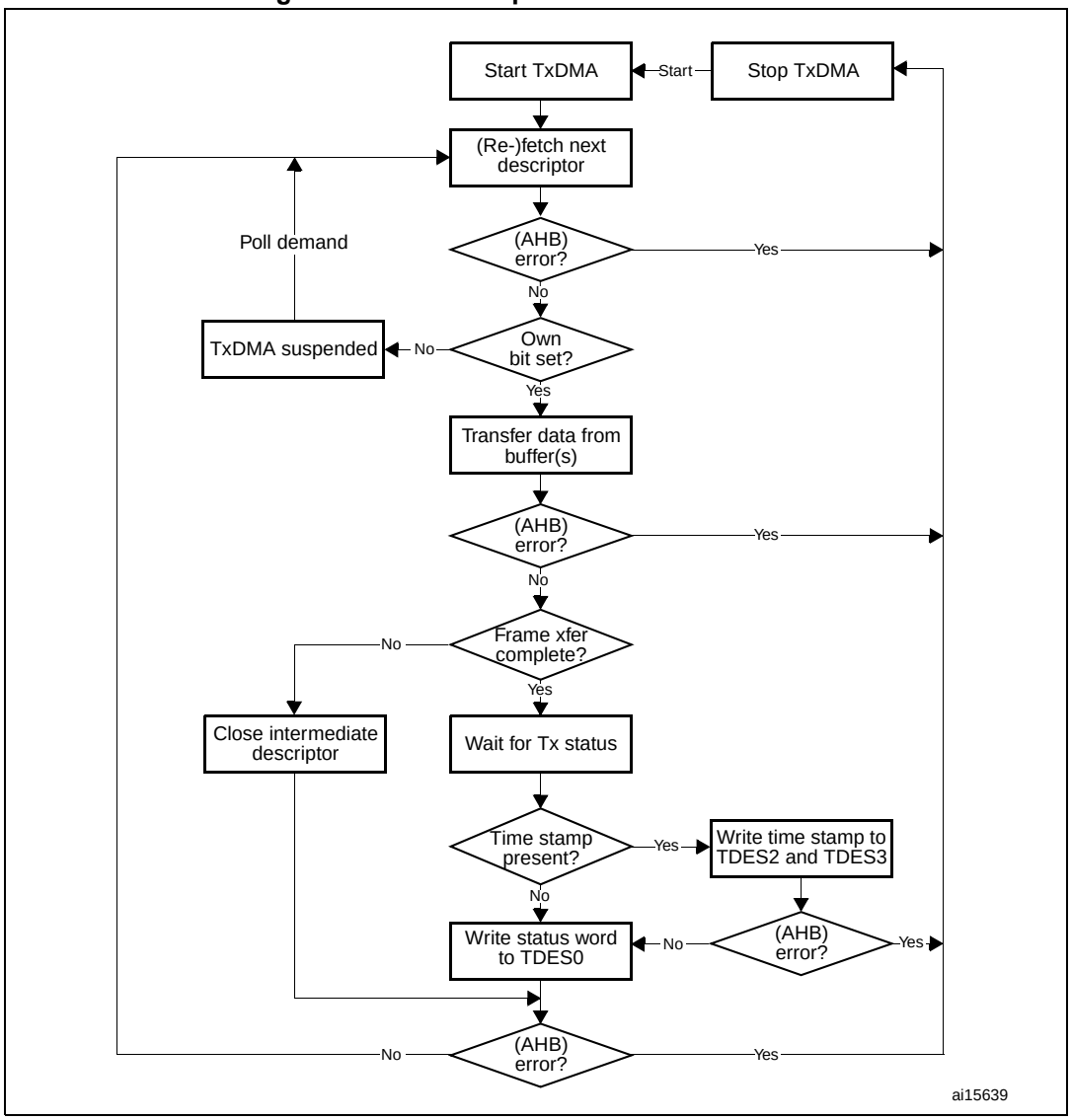

TxDMA operation: OSF mode

While in the Run state, the transmit process can simultaneously acquire two frames without closing the Status descriptor of the first (if the OSF bit is set in ETH_DMAOMR register[2]). As the transmit process finishes transferring the first frame, it immediately polls the transmit descriptor list for the second frame. If the second frame is valid, the transmit process transfers this frame before writing the first frame's status information. In OSF mode, the Run-state transmit DMA operates according to the following sequence:

1. The DMA operates as described in steps 1–6 of the TxDMA (default mode).
2. Without closing the previous frame's last descriptor, the DMA fetches the next descriptor.
3. If the DMA owns the acquired descriptor, the DMA decodes the transmit buffer address in this descriptor. If the DMA does not own the descriptor, the DMA goes into Suspend mode and skips to Step 7.
4. The DMA fetches the Transmit frame from the STM32F4xx memory and transfers the frame until the end of frame data are transferred, closing the intermediate descriptors if this frame is split across multiple descriptors.
5. The DMA waits for the transmission status and time stamp of the previous frame. When the status is available, the DMA writes the time stamp to TDES2 and TDES3, if such time stamp was captured (as indicated by a status bit). The DMA then writes the status, with a cleared OWN bit, to the corresponding TDES0, thus closing the descriptor. If time stamping was not enabled for the previous frame, the DMA does not alter the contents of TDES2 and TDES3.
6. If enabled, the Transmit interrupt is set, the DMA fetches the next descriptor, then proceeds to Step 3 (when Status is normal). If the previous transmission status shows an underflow error, the DMA goes into Suspend mode (Step 7).
7. In Suspend mode, if a pending status and time stamp are received by the DMA, it writes the time stamp (if enabled for the current frame) to TDES2 and TDES3, then writes the status to the corresponding TDES0. It then sets relevant interrupts and returns to Suspend mode.
8. The DMA can exit Suspend mode and enter the Run state (go to Step 1 or Step 2 depending on pending status) only after receiving a Transmit Poll demand (ETH_DMATPDR register).

Figure 378 shows the basic flowchart in OSF mode.

Figure 378. TxDMA operation in OSF mode

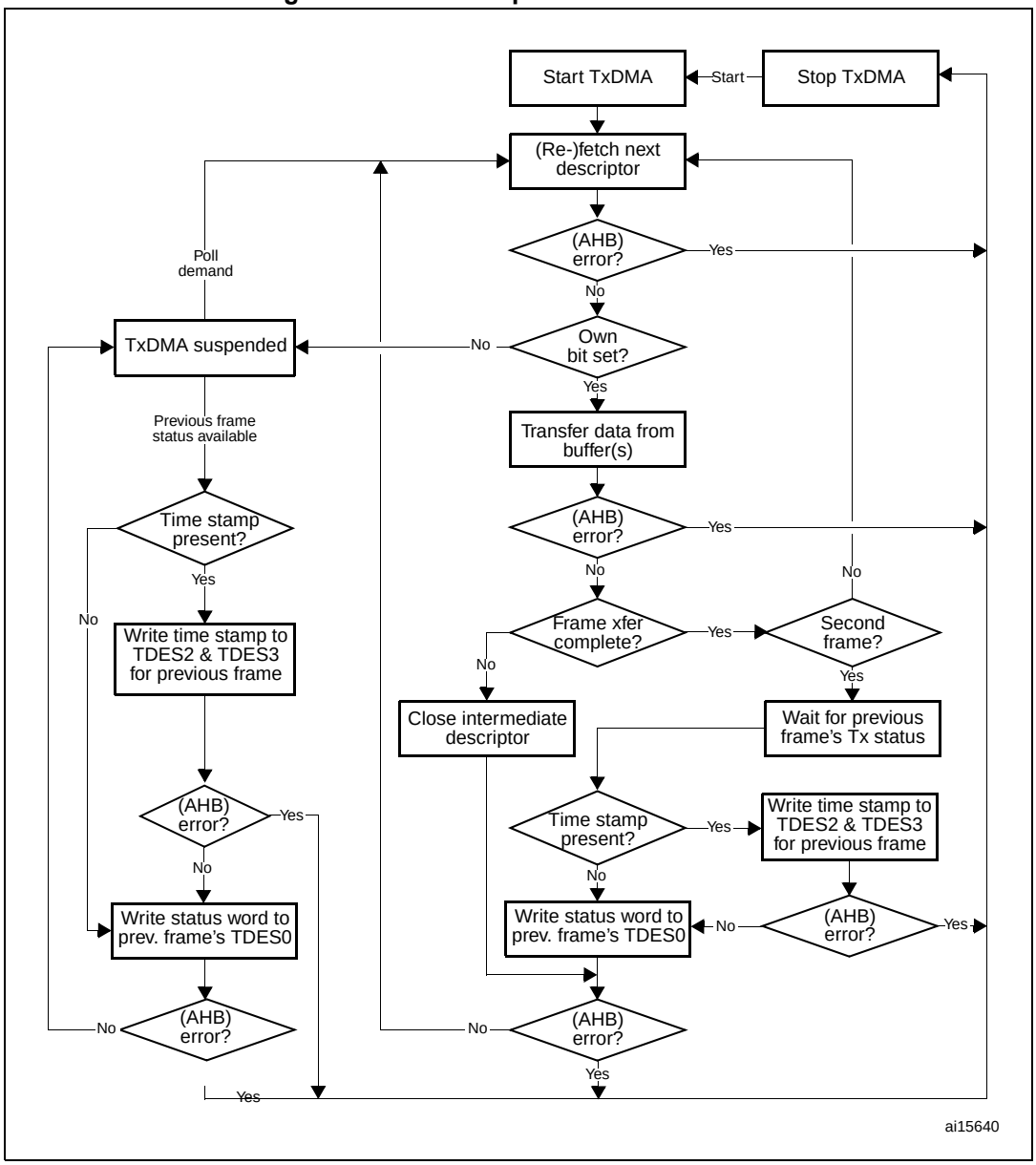

Transmit frame processing

The transmit DMA expects that the data buffers contain complete Ethernet frames, excluding preamble, pad bytes, and FCS fields. The DA, SA, and Type/Len fields contain valid data. If the transmit descriptor indicates that the MAC core must disable CRC or pad insertion, the buffer must have complete Ethernet frames (excluding preamble), including the CRC bytes. Frames can be data-chained and span over several buffers. Frames have to be delimited by the first descriptor (TDES0[28]) and the last descriptor (TDES0[29]). As the transmission starts, TDES0[28] has to be set in the first descriptor. When this occurs, the frame data are transferred from the memory buffer to the Transmit FIFO. Concurrently, if the last descriptor (TDES0[29]) of the current frame is cleared, the transmit process attempts to acquire the next descriptor. The transmit process expects TDES0[28] to be cleared in this descriptor. If TDES0[29] is cleared, it indicates an intermediary buffer. If TDES0[29] is set, it

indicates the last buffer of the frame. After the last buffer of the frame has been transmitted, the DMA writes back the final status information to the transmit descriptor 0 (TDES0) word of the descriptor that has the last segment set in transmit descriptor 0 (TDES0[29]). At this time, if Interrupt on Completion (TDES0[30]) is set, Transmit Interrupt (in ETH_DMASR register [0]) is set, the next descriptor is fetched, and the process repeats. Actual frame transmission begins after the Transmit FIFO has reached either a programmable transmit threshold (ETH_DMAOMR register[16:14]), or a full frame is contained in the FIFO. There is also an option for the Store and forward mode (ETH_DMAOMR register[21]). Descriptors are released (OWN bit TDES0[31] is cleared) when the DMA finishes transferring the frame.

Transmit polling suspended

Transmit polling can be suspended by either of the following conditions:

- The DMA detects a descriptor owned by the CPU (TDES0[31]=0) and the Transmit buffer unavailable flag is set (ETH_DMASR register[2]). To resume, the driver must give descriptor ownership to the DMA and then issue a Poll Demand command.
- A frame transmission is aborted when a transmit error due to underflow is detected. The appropriate Transmit Descriptor 0 (TDES0) bit is set. If the second condition occurs, both the Abnormal Interrupt Summary (in ETH_DMASR register [15]) and Transmit Underflow bits (in ETH_DMASR register[5]) are set, and the information is written to Transmit Descriptor 0, causing the suspension. If the DMA goes into Suspend state due to the first condition, then both the Normal Interrupt Summary (ETH_DMASR register [16]) and Transmit Buffer Unavailable (ETH_DMASR register[2]) bits are set. In both cases, the position in the transmit list is retained. The retained position is that of the descriptor following the last descriptor closed by the DMA. The driver must explicitly issue a Transmit Poll Demand command after rectifying the suspension cause.

Normal Tx DMA descriptors

The normal transmit descriptor structure consists of four 32-bit words as shown in *Figure 379*. The bit descriptions of TDES0, TDES1, TDES2 and TDES3 are given below.

Note that enhanced descriptors must be used if time stamping is activated (ETH_PTPTSCR bit 0, TSE=1) or if IPv4 checksum offload is activated (ETH_MACCR bit 10, IPCO=1).

Figure 379. Normal transmit descriptor

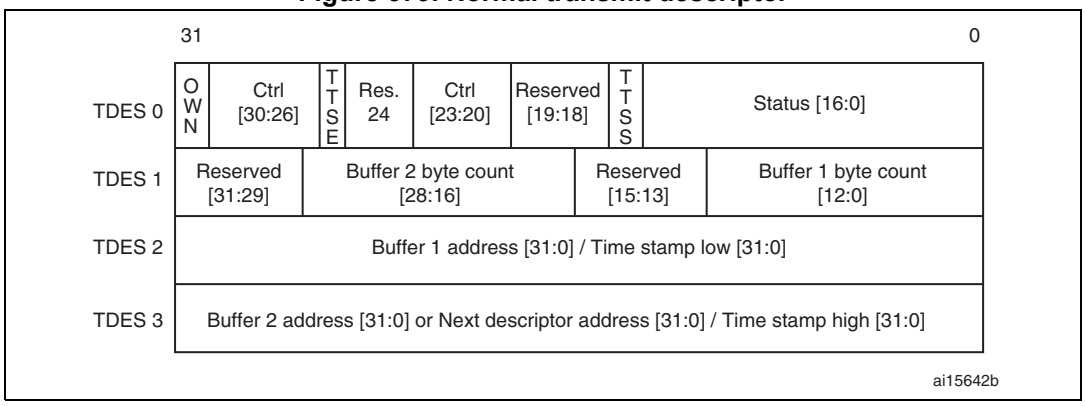

- **TDES0: Transmit descriptor Word0**

  The application software has to program the control bits [30:26]+[23:20] plus the OWN bit [31] during descriptor initialization. When the DMA updates the descriptor (or writes it back), it resets all the control bits plus the OWN bit, and reports only the status bits.

31	30	29	28	27	26	25	24	23	22	21	20	19	18	17	16
OWN	IC	LS	FS	DC	DP	TTSE	Res	CIC		TER	TCH	Res.		TTSS	IHE
rw	rw	rw	rw	rw	rw	rw		rw	rw	rw	rw			rw	rw

15	14	13	12	11	10	9	8	7	6	5	4	3	2	1	0
ES	JT	FF	IPE	LCA	NC	LCO	EC	VF	CC				ED	UF	DB
rw	rw	rw	rw	rw	rw	rw	rw	rw	rw	rw	rw	rw	rw	rw	rw

Bit 31 **OWN:** Own bit

When set, this bit indicates that the descriptor is owned by the DMA. When this bit is reset, it indicates that the descriptor is owned by the CPU. The DMA clears this bit either when it completes the frame transmission or when the buffers allocated in the descriptor are read completely. The ownership bit of the frame's first descriptor must be set after all subsequent descriptors belonging to the same frame have been set.

Bit 30 **IC:** Interrupt on completion

When set, this bit sets the Transmit Interrupt (Register 5[0]) after the present frame has been transmitted.

Bit 29 **LS:** Last segment

When set, this bit indicates that the buffer contains the last segment of the frame.

Bit 28 **FS:** First segment

When set, this bit indicates that the buffer contains the first segment of a frame.

Bit 27 **DC:** Disable CRC

When this bit is set, the MAC does not append a cyclic redundancy check (CRC) to the end of the transmitted frame. This is valid only when the first segment (TDES0[28]) is set.

Bit 26 **DP:** Disable pad

When set, the MAC does not automatically add padding to a frame shorter than 64 bytes. When this bit is reset, the DMA automatically adds padding and CRC to a frame shorter than 64 bytes, and the CRC field is added despite the state of the DC (TDES0[27]) bit. This is valid only when the first segment (TDES0[28]) is set.

Bit 25 **TTSE:** Transmit time stamp enable

When TTSE is set and when TSE is set (ETH_PTPTSCR bit 0), IEEE1588 hardware time stamping is activated for the transmit frame described by the descriptor. This field is only valid when the First segment control bit (TDES0[28]) is set.

Bit 24 Reserved, must be kept at reset value.

Bits 23:22 **CIC:** Checksum insertion control

These bits control the checksum calculation and insertion. Bit encoding is as shown below:

00: Checksum Insertion disabled

01: Only IP header checksum calculation and insertion are enabled

10: IP header checksum and payload checksum calculation and insertion are enabled, but pseudo-header checksum is not calculated in hardware

11: IP Header checksum and payload checksum calculation and insertion are enabled, and pseudo-header checksum is calculated in hardware.

Bit 21 **TER:** Transmit end of ring

When set, this bit indicates that the descriptor list reached its final descriptor. The DMA returns to the base address of the list, creating a descriptor ring.

Bit 20 **TCH:** Second address chained

When set, this bit indicates that the second address in the descriptor is the next descriptor address rather than the second buffer address. When TDES0[20] is set, TBS2 (TDES1[28:16]) is a “don’t care” value. TDES0[21] takes precedence over TDES0[20].

Bits 19:18 Reserved, must be kept at reset value.

Bit 17 **TTSS:** Transmit time stamp status

This field is used as a status bit to indicate that a time stamp was captured for the described transmit frame. When this bit is set, TDES2 and TDES3 have a time stamp value captured for the transmit frame. This field is only valid when the descriptor’s Last segment control bit (TDES0[29]) is set.

Note that when enhanced descriptors are enabled (EDFE=1 in ETH_DMABMR), TTSS=1 indicates that TDES6 and TDES7 have the time stamp value.

Bit 16 **IHE:** IP header error

When set, this bit indicates that the MAC transmitter detected an error in the IP datagram header. The transmitter checks the header length in the IPv4 packet against the number of header bytes received from the application and indicates an error status if there is a mismatch. For IPv6 frames, a header error is reported if the main header length is not 40 bytes. Furthermore, the Ethernet length/type field value for an IPv4 or IPv6 frame must match the IP header version received with the packet. For IPv4 frames, an error status is also indicated if the Header Length field has a value less than 0x5.

Bit 15 **ES:** Error summary

Indicates the logical OR of the following bits:
TDES0[14]: Jabber timeout
TDES0[13]: Frame flush
TDES0[11]: Loss of carrier
TDES0[10]: No carrier
TDES0[9]: Late collision
TDES0[8]: Excessive collision
TDES0[2]:Excessive deferral
TDES0[1]: Underflow error
TDES0[16]: IP header error
TDES0[12]: IP payload error

Bit 14 **JT:** Jabber timeout

When set, this bit indicates the MAC transmitter has experienced a jabber timeout. This bit is only set when the MAC configuration register’s JD bit is not set.

Bit 13 **FF:** Frame flushed

When set, this bit indicates that the DMA/MTL flushed the frame due to a software Flush command given by the CPU.

Bit 12 **IPE:** IP payload error

When set, this bit indicates that MAC transmitter detected an error in the TCP, UDP, or ICMP IP datagram payload. The transmitter checks the payload length received in the IPv4 or IPv6 header against the actual number of TCP, UDP or ICMP packet bytes received from the application and issues an error status in case of a mismatch.

Bit 11 **LCA:** Loss of carrier

When set, this bit indicates that a loss of carrier occurred during frame transmission (that is, the MII_CRS signal was inactive for one or more transmit clock periods during frame transmission). This is valid only for the frames transmitted without collision when the MAC operates in Half-duplex mode.

Bit 10 **NC:** No carrier

When set, this bit indicates that the Carrier Sense signal form the PHY was not asserted during transmission.

Bit 9 **LCO:** Late collision

When set, this bit indicates that frame transmission was aborted due to a collision occurring after the collision window (64 byte times, including preamble, in MII mode). This bit is not valid if the Underflow Error bit is set.

Bit 8 **EC:** Excessive collision

When set, this bit indicates that the transmission was aborted after 16 successive collisions while attempting to transmit the current frame. If the RD (Disable retry) bit in the MAC Configuration register is set, this bit is set after the first collision, and the transmission of the frame is aborted.

Bit 7 **VF:** VLAN frame

When set, this bit indicates that the transmitted frame was a VLAN-type frame.

Bits 6:3 **CC:** Collision count

This 4-bit counter value indicates the number of collisions occurring before the frame was transmitted. The count is not valid when the Excessive collisions bit (TDES0[8]) is set.

Bit 2 **ED:** Excessive deferral

When set, this bit indicates that the transmission has ended because of excessive deferral of over 24 288 bit times if the Deferral check (DC) bit in the MAC Control register is set high.

Bit 1 **UF:** Underflow error

When set, this bit indicates that the MAC aborted the frame because data arrived late from the RAM memory. Underflow error indicates that the DMA encountered an empty transmit buffer while transmitting the frame. The transmission process enters the Suspended state and sets both Transmit underflow (Register 5[5]) and Transmit interrupt (Register 5[0]).

Bit 0 **DB:** Deferred bit

When set, this bit indicates that the MAC defers before transmission because of the presence of the carrier. This bit is valid only in Half-duplex mode.

- **TDES1: Transmit descriptor Word1**

31	30	29	28	27	26	25	24	23	22	21	20	19	18	17	16	15	14	13	12	11	10	9	8	7	6	5	4	3	2	1	0
Reserved			TBS2													Reserved			TBS1												
			rw	rw	rw	rw	rw	rw	rw	rw	rw	rw	rw	rw	rw				rw	rw	rw	rw	rw	rw	rw	rw	rw	rw	rw	rw	rw

31:29 Reserved, must be kept at reset value.

28:16 **TBS2:** Transmit buffer 2 size

These bits indicate the second data buffer size in bytes. This field is not valid if TDES0[20] is set.

15:13 Reserved, must be kept at reset value.

12:0 **TBS1:** Transmit buffer 1 size

These bits indicate the first data buffer byte size, in bytes. If this field is 0, the DMA ignores this buffer and uses Buffer 2 or the next descriptor, depending on the value of TCH (TDES0[20]).

- **TDES2: Transmit descriptor Word2**

  TDES2 contains the address pointer to the first buffer of the descriptor or it contains time stamp data.

31	30	29	28	27	26	25	24	23	22	21	20	19	18	17	16	15	14	13	12	11	10	9	8	7	6	5	4	3	2	1	0
TBAP1/TBAP/TTSL																															
rw																															

Bits 31:0 **TBAP1:** Transmit buffer 1 address pointer / Transmit frame time stamp low

These bits have two different functions: they indicate to the DMA the location of data in memory, and after all data are transferred, the DMA can then use these bits to pass back time stamp data.

TBAP: When the software makes this descriptor available to the DMA (at the moment that the OWN bit is set to 1 in TDES0), these bits indicate the physical address of Buffer 1. There is no limitation on the buffer address alignment. See *Host data buffer alignment* for further details on buffer address alignment.

TTSL: Before it clears the OWN bit in TDES0, the DMA updates this field with the 32 least significant bits of the time stamp captured for the corresponding transmit frame (overwriting the value for TBAP1). This field has the time stamp only if time stamping is activated for this frame (see TTSE, TDES0 bit 25) and if the Last segment control bit (LS) in the descriptor is set.

- **TDES3: Transmit descriptor Word3**

  TDES3 contains the address pointer either to the second buffer of the descriptor or the next descriptor, or it contains time stamp data.

31	30	29	28	27	26	25	24	23	22	21	20	19	18	17	16	15	14	13	12	11	10	9	8	7	6	5	4	3	2	1	0
TBAP2/TBAP2/TTSH																															
rw																															

Bits 31:0 **TBAP2:** Transmit buffer 2 address pointer (Next descriptor address) / Transmit frame time stamp high

These bits have two different functions: they indicate to the DMA the location of data in memory, and after all data are transferred, the DMA can then use these bits to pass back time stamp data.

TBAP2: When the software makes this descriptor available to the DMA (at the moment when the OWN bit is set to 1 in TDES0), these bits indicate the physical address of Buffer 2 when a descriptor ring structure is used. If the Second address chained (TDES1 [20]) bit is set, this address contains the pointer to the physical memory where the next descriptor is present. The buffer address pointer must be aligned to the bus width only when TDES1 [20] is set. (LSBs are ignored internally.)

TTSH: Before it clears the OWN bit in TDES0, the DMA updates this field with the 32 most significant bits of the time stamp captured for the corresponding transmit frame (overwriting the value for TBAP2). This field has the time stamp only if time stamping is activated for this frame (see TDES0 bit 25, TTSE) and if the Last segment control bit (LS) in the descriptor is set.

Enhanced Tx DMA descriptors

Enhanced descriptors (enabled with EDFE=1, ETHDMABMR bit 7), must be used if time stamping is activated (TSE=1, ETH_PTPTSCR bit 0) or if IPv4 checksum offload is activated (IPCO=1, ETH_MACCR bit 10).

Enhanced descriptors comprise eight 32-bit words, twice the size of normal descriptors. TDES0, TDES1, TDES2 and TDES3 have the same definitions as for normal transmit descriptors (refer to *Normal Tx DMA descriptors*). TDES6 and TDES7 hold the time stamp. TDES4, TDES5, TDES6 and TDES7 are defined below.

When the Enhanced descriptor mode is selected, the software needs to allocate 32-bytes (8 words) of memory for every descriptor. When time stamping or IPv4 checksum offload are not being used, the enhanced descriptor format may be disabled and the software can use normal descriptors with the default size of 16 bytes.

Figure 380. Enhanced transmit descriptor

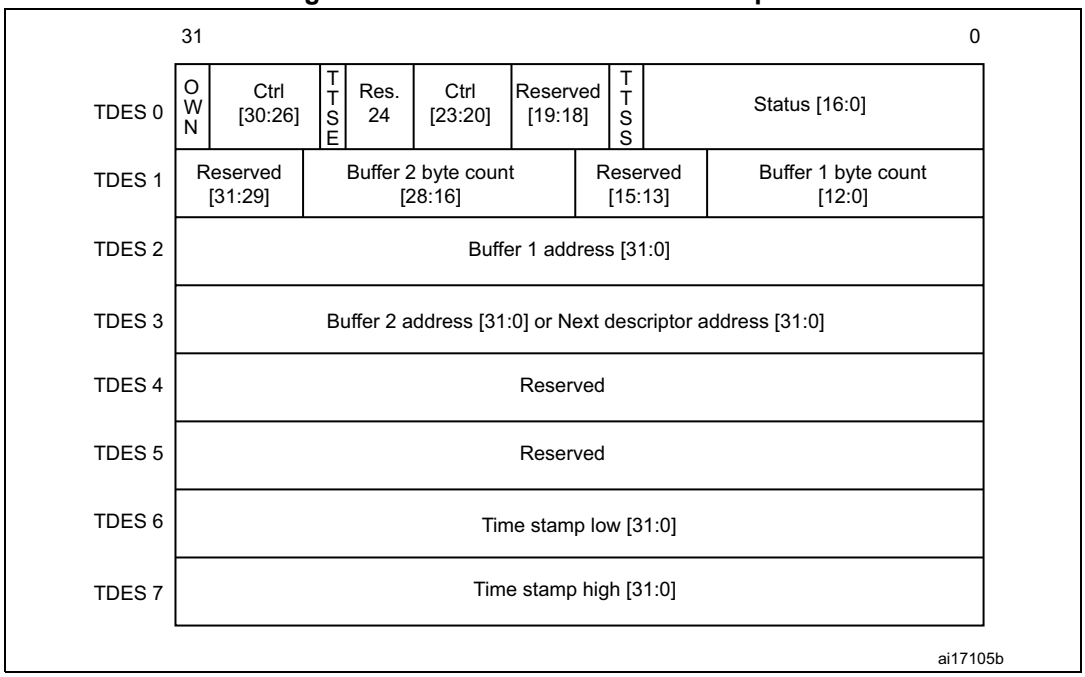

- TDES4: Transmit descriptor Word4

  Reserved
- TDES5: Transmit descriptor Word5

  Reserved
- **TDES6: Transmit descriptor Word6**

31	30	29	28	27	26	25	24	23	22	21	20	19	18	17	16	15	14	13	12	11	10	9	8	7	6	5	4	3	2	1	0
TTSL																															
rw																															

Bits 31:0 **TTSL:** Transmit frame time stamp low

This field is updated by DMA with the 32 least significant bits of the time stamp captured for the corresponding transmit frame. This field has the time stamp only if the Last segment control bit (LS) in the descriptor is set.

- **TDES7: Transmit descriptor Word7**

31	30	29	28	27	26	25	24	23	22	21	20	19	18	17	16	15	14	13	12	11	10	9	8	7	6	5	4	3	2	1	0
TTSH																															
rw																															

Bits 31:0 **TTSH:** Transmit frame time stamp high

This field is updated by DMA with the 32 most significant bits of the time stamp captured for the corresponding transmit frame. This field has the time stamp only if the Last segment control bit (LS) in the descriptor is set.

33.6.8 Rx DMA configuration

The Receive DMA engine's reception sequence is illustrated in *Figure 381* and described below:

1. The CPU sets up Receive descriptors (RDES0-RDES3) and sets the OWN bit (RDES0[31]).
2. Once the SR (ETH_DMAOMR register[1]) bit is set, the DMA enters the Run state. While in the Run state, the DMA polls the receive descriptor list, attempting to acquire free descriptors. If the fetched descriptor is not free (is owned by the CPU), the DMA enters the Suspend state and jumps to Step 9.
3. The DMA decodes the receive data buffer address from the acquired descriptors.
4. Incoming frames are processed and placed in the acquired descriptor's data buffers.
5. When the buffer is full or the frame transfer is complete, the Receive engine fetches the next descriptor.
6. If the current frame transfer is complete, the DMA proceeds to step 7. If the DMA does not own the next fetched descriptor and the frame transfer is not complete (EOF is not yet transferred), the DMA sets the Descriptor error bit in RDES0 (unless flushing is disabled). The DMA closes the current descriptor (clears the OWN bit) and marks it as intermediate by clearing the Last segment (LS) bit in the RDES1 value (marks it as last descriptor if flushing is not disabled), then proceeds to step 8. If the DMA owns the next descriptor but the current frame transfer is not complete, the DMA closes the current descriptor as intermediate and returns to step 4.
7. If IEEE 1588 time stamping is enabled, the DMA writes the time stamp (if available) to the current descriptor's RDES2 and RDES3. It then takes the received frame's status and writes the status word to the current descriptor's RDES0, with the OWN bit cleared and the Last segment bit set.
8. The Receive engine checks the latest descriptor's OWN bit. If the CPU owns the descriptor (OWN bit is at 0) the Receive buffer unavailable bit (in ETH_DMASR register[7]) is set and the DMA Receive engine enters the Suspended state (step 9). If the DMA owns the descriptor, the engine returns to step 4 and awaits the next frame.
9. Before the Receive engine enters the Suspend state, partial frames are flushed from the Receive FIFO (you can control flushing using bit 24 in the ETH_DMAOMR register).
10. The Receive DMA exits the Suspend state when a Receive Poll demand is given or the start of next frame is available from the Receive FIFO. The engine proceeds to step 2 and re-fetches the next descriptor.

The DMA does not acknowledge accepting the status until it has completed the time stamp write-back and is ready to perform status write-back to the descriptor. If software has enabled time stamping through CSR, when a valid time stamp value is not available for the frame (for example, because the receive FIFO was full before the time stamp could be written to it), the DMA writes all ones to RDES2 and RDES3. Otherwise (that is, if time stamping is not enabled), RDES2 and RDES3 remain unchanged.

Figure 381. Receive DMA operation

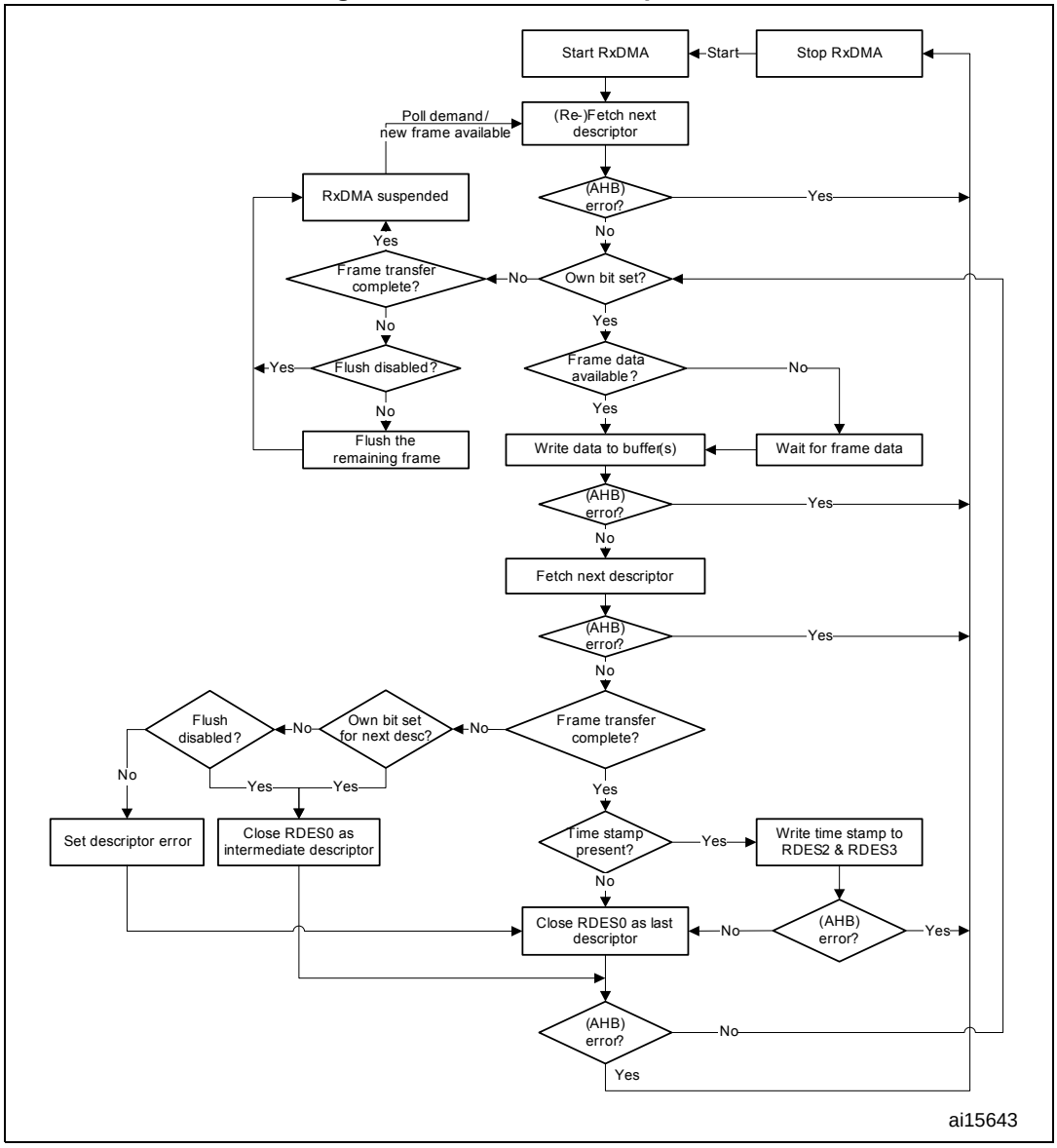

Receive descriptor acquisition

The receive engine always attempts to acquire an extra descriptor in anticipation of an incoming frame. Descriptor acquisition is attempted if any of the following conditions is/are satisfied:

- The receive Start/Stop bit (ETH_DMAOMR register[1]) has been set immediately after the DMA has been placed in the Run state.
- The data buffer of the current descriptor is full before the end of the frame currently being transferred
- The controller has completed frame reception, but the current receive descriptor has not yet been closed.
- The receive process has been suspended because of a CPU-owned buffer (RDES0[31] = 0) and a new frame is received.
- A Receive poll demand has been issued.

Receive frame processing

The MAC transfers the received frames to the STM32F4xx memory only when the frame passes the address filter and the frame size is greater than or equal to the configurable threshold bytes set for the Receive FIFO, or when the complete frame is written to the FIFO in Store-and-forward mode. If the frame fails the address filtering, it is dropped in the MAC block itself (unless Receive All ETH_MACFFR [31] bit is set). Frames that are shorter than 64 bytes, because of collision or premature termination, can be purged from the Receive FIFO. After 64 (configurable threshold) bytes have been received, the DMA block begins transferring the frame data to the receive buffer pointed to by the current descriptor. The DMA sets the first descriptor (RDES0[9]) after the DMA AHB Interface becomes ready to receive a data transfer (if DMA is not fetching transmit data from the memory), to delimit the frame. The descriptors are released when the OWN (RDES0[31]) bit is reset to 0, either as the data buffer fills up or as the last segment of the frame is transferred to the receive buffer. If the frame is contained in a single descriptor, both the last descriptor (RDES0[8]) and first descriptor (RDES0[9]) bits are set. The DMA fetches the next descriptor, sets the last descriptor (RDES0[8]) bit, and releases the RDES0 status bits in the previous frame descriptor. Then the DMA sets the receive interrupt bit (ETH_DMASR register [6]). The same process repeats unless the DMA encounters a descriptor flagged as being owned by the CPU. If this occurs, the receive process sets the receive buffer unavailable bit (ETH_DMASR register[7]) and then enters the Suspend state. The position in the receive list is retained.

Receive process suspended

If a new receive frame arrives while the receive process is in Suspend state, the DMA re-fetches the current descriptor in the STM32F4xx memory. If the descriptor is now owned by the DMA, the receive process re-enters the Run state and starts frame reception. If the descriptor is still owned by the host, by default, the DMA discards the current frame at the top of the Rx FIFO and increments the missed frame counter. If more than one frame is stored in the Rx FIFO, the process repeats. The discarding or flushing of the frame at the top of the Rx FIFO can be avoided by setting the DMA Operation mode register bit 24 (DFRF). In such conditions, the receive process sets the receive buffer unavailable status bit and returns to the Suspend state.

Normal Rx DMA descriptors

The normal receive descriptor structure consists of four 32-bit words (16 bytes). These are shown in *Figure 382*. The bit descriptions of RDES0, RDES1, RDES2 and RDES3 are given below.

Note that enhanced descriptors must be used if time stamping is activated (TSE=1, ETH_PTPTSCR bit 0) or if IPv4 checksum offload is activated (IPCO=1, ETH_MACCR bit 10).

Figure 382. Normal Rx DMA descriptor structure

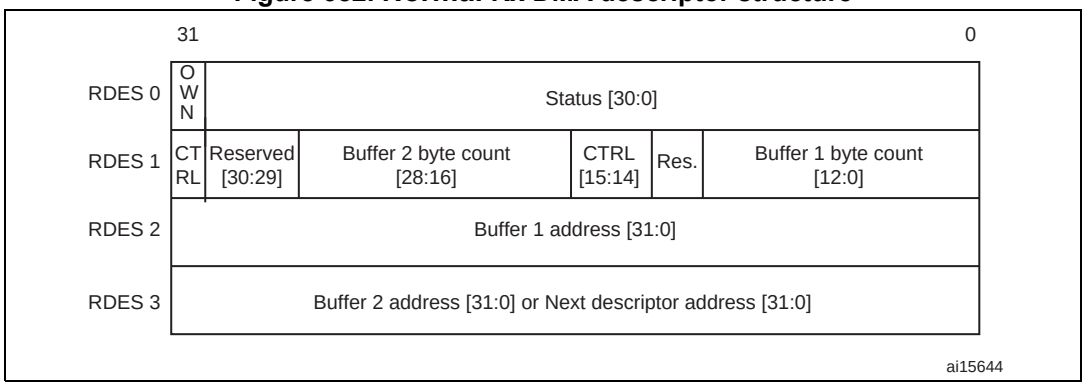

- **RDES0: Receive descriptor Word0**

  RDES0 contains the received frame status, the frame length and the descriptor ownership information.

31	30	29	28	27	26	25	24	23	22	21	20	19	18	17	16	15	14	13	12	11	10	9	8	7	6	5	4	3	2	1	0
OWN	AFM	FL														ES	DE	SAF	LE	OE	VLAN	FS	LS	IPHCE/TSV	LCO	FT	RWT	RE	DE	CE	PCE/ESA
rw																															

Bit 31 **OWN:** Own bit

When set, this bit indicates that the descriptor is owned by the DMA of the MAC Subsystem. When this bit is reset, it indicates that the descriptor is owned by the Host. The DMA clears this bit either when it completes the frame reception or when the buffers that are associated with this descriptor are full.

Bit 30 **AFM:** Destination address filter fail

When set, this bit indicates a frame that failed the DA filter in the MAC Core.

Bits 29:16 **FL:** Frame length

These bits indicate the byte length of the received frame that was transferred to host memory (including CRC). This field is valid only when last descriptor (RDES0[8]) is set and descriptor error (RDES0[14]) is reset.

This field is valid when last descriptor (RDES0[8]) is set. When the last descriptor and error summary bits are not set, this field indicates the accumulated number of bytes that have been transferred for the current frame.

Bit 15 **ES:** Error summary

Indicates the logical OR of the following bits:
RDES0[1]: CRC error
RDES0[3]: Receive error
RDES0[4]: Watchdog timeout
RDES0[6]: Late collision
RDES0[7]: Giant frame (This is not applicable when RDES0[7] indicates an IPV4 header checksum error.)
RDES0[11]: Overflow error
RDES0[14]: Descriptor error.
This field is valid only when the last descriptor (RDES0[8]) is set.

Bit 14 **DE:** Descriptor error

When set, this bit indicates a frame truncation caused by a frame that does not fit within the current descriptor buffers, and that the DMA does not own the next descriptor. The frame is truncated. This field is valid only when the last descriptor (RDES0[8]) is set.

Bit 13 **SAF:** Source address filter fail

When set, this bit indicates that the SA field of frame failed the SA filter in the MAC Core.

Bit 12 **LE:** Length error

When set, this bit indicates that the actual length of the received frame does not match the value in the Length/ Type field. This bit is valid only when the Frame type (RDES0[5]) bit is reset.

Bit 11 **OE:** Overflow error

When set, this bit indicates that the received frame was damaged due to buffer overflow.

Bit 10 **VLAN:** VLAN tag

When set, this bit indicates that the frame pointed to by this descriptor is a VLAN frame tagged by the MAC core.

Bit 9 **FS:** First descriptor

When set, this bit indicates that this descriptor contains the first buffer of the frame. If the size of the first buffer is 0, the second buffer contains the beginning of the frame. If the size of the second buffer is also 0, the next descriptor contains the beginning of the frame.

Bit 8 **LS:** Last descriptor

When set, this bit indicates that the buffers pointed to by this descriptor are the last buffers of the frame.

Bit 7 **IPHCE/TSV:** IPv header checksum error / time stamp valid

If IPHCE is set, it indicates an error in the IPv4 or IPv6 header. This error can be due to inconsistent Ethernet Type field and IP header Version field values, a header checksum mismatch in IPv4, or an Ethernet frame lacking the expected number of IP header bytes. This bit can take on special meaning as specified in *Table 193*.

If enhanced descriptor format is enabled (EDFE=1, bit 7 of ETH_DMABMR), this bit takes on the TSV function (otherwise it is IPHCE). When TSV is set, it indicates that a snapshot of the timestamp is written in descriptor words 6 (RDES6) and 7 (RDES7). TSV is valid only when the Last descriptor bit (RDES0[8]) is set.

Bit 6 **LCO:** Late collision

When set, this bit indicates that a late collision has occurred while receiving the frame in Half-duplex mode.

Bit 5 **FT:** Frame type

When set, this bit indicates that the Receive frame is an Ethernet-type frame (the LT field is greater than or equal to 0x0600). When this bit is reset, it indicates that the received frame is an IEEE802.3 frame. This bit is not valid for Runt frames less than 14 bytes. When the normal descriptor format is used (ETH_DMABMR EDFE=0), FT can take on special meaning as specified in *Table 193*.

Bit 4 **RWT:** Receive watchdog timeout

When set, this bit indicates that the Receive watchdog timer has expired while receiving the current frame and the current frame is truncated after the watchdog timeout.

Bit 3 **RE:** Receive error

When set, this bit indicates that the RX_ERR signal is asserted while RX_DV is asserted during frame reception.

Bit 2 **DE:** Dribble bit error

When set, this bit indicates that the received frame has a non-integer multiple of bytes (odd nibbles). This bit is valid only in MII mode.

Bit 1 **CE:** CRC error

When set, this bit indicates that a cyclic redundancy check (CRC) error occurred on the received frame. This field is valid only when the last descriptor (RDES0[8]) is set.

Bit 0 **PCE/ESA**: Payload checksum error / extended status available

When set, it indicates that the TCP, UDP or ICMP checksum the core calculated does not match the received encapsulated TCP, UDP or ICMP segment's Checksum field. This bit is also set when the received number of payload bytes does not match the value indicated in the Length field of the encapsulated IPv4 or IPv6 datagram in the received Ethernet frame. This bit can take on special meaning as specified in *Table 193*.

If the enhanced descriptor format is enabled (EDFE=1, bit 7 in ETH_DMABMR), this bit takes on the ESA function (otherwise it is PCE). When ESA is set, it indicates that the extended status is available in descriptor word 4 (RDES4). ESA is valid only when the last descriptor bit (RDES0[8]) is set.

Bits 5, 7, and 0 reflect the conditions discussed in *Table 193*.

Table 193. Receive descriptor 0 - encoding for bits 7, 5 and 0 (normal descriptor format only, EDFE=0)

Bit 5: frame type	Bit 7: IPC checksum error	Bit 0: payload checksum error	Frame status
0	0	0	IEEE 802.3 Type frame (Length field value is less than 0x0600.)
1	0	0	IPv4/IPv6 Type frame, no checksum error detected
1	0	1	IPv4/IPv6 Type frame with a payload checksum error (as described for PCE) detected
1	1	0	IPv4/IPv6 Type frame with an IP header checksum error (as described for IPC CE) detected
1	1	1	IPv4/IPv6 Type frame with both IP header and payload checksum errors detected
0	0	1	IPv4/IPv6 Type frame with no IP header checksum error and the payload check bypassed, due to an unsupported payload
0	1	1	A Type frame that is neither IPv4 or IPv6 (the checksum offload engine bypasses checksum completely.)
0	1	0	Reserved

- **RDES1: Receive descriptor Word1**

31	30	29	28	27	26	25	24	23	22	21	20	19	18	17	16	15	14	13	12	11	10	9	8	7	6	5	4	3	2	1	0
DIC	RBS2		RBS2													RER	RCH	Reserved	RBS												
rw	rw	rw	rw	rw	rw	rw	rw	rw	rw	rw	rw	rw	rw	rw	rw	rw	rw		rw	rw	rw	rw	rw	rw	rw	rw	rw	rw	rw	rw	rw

Bit 31 **DIC:** Disable interrupt on completion

When set, this bit prevents setting the Status register's RS bit (CSR5[6]) for the received frame ending in the buffer indicated by this descriptor. This, in turn, disables the assertion of the interrupt to Host due to RS for that frame.

Bits 30:29 Reserved, must be kept at reset value.

Bits 28:16 **RBS2:** Receive buffer 2 size

These bits indicate the second data buffer size, in bytes. The buffer size must be a multiple of 4, 8, or 16, depending on the bus widths (32, 64 or 128, respectively), even if the value of RDES3 (buffer2 address pointer) is not aligned to bus width. If the buffer size is not an appropriate multiple of 4, 8 or 16, the resulting behavior is undefined. This field is not valid if RDES1 [14] is set.

Bit 15 **RER:** Receive end of ring

When set, this bit indicates that the descriptor list reached its final descriptor. The DMA returns to the base address of the list, creating a descriptor ring.

Bit 14 **RCH:** Second address chained

When set, this bit indicates that the second address in the descriptor is the next descriptor address rather than the second buffer address. When this bit is set, RBS2 (RDES1[28:16]) is a “don’t care” value. RDES1[15] takes precedence over RDES1[14].

Bit 13 Reserved, must be kept at reset value.

Bits 12:0 **RBS1:** Receive buffer 1 size

Indicates the first data buffer size in bytes. The buffer size must be a multiple of 4, 8 or 16, depending upon the bus widths (32, 64 or 128), even if the value of RDES2 (buffer1 address pointer) is not aligned. When the buffer size is not a multiple of 4, 8 or 16, the resulting behavior is undefined. If this field is 0, the DMA ignores this buffer and uses Buffer 2 or next descriptor depending on the value of RCH (bit 14).

- **RDES2: Receive descriptor Word2**

  RDES2 contains the address pointer to the first data buffer in the descriptor, or it contains time stamp data.

31	30	29	28	27	26	25	24	23	22	21	20	19	18	17	16	15	14	13	12	11	10	9	8	7	6	5	4	3	2	1	0
RBP1 / RTSL																															
rw	rw	rw	rw	rw	rw	rw	rw	rw	rw	rw	rw	rw	rw	rw	rw	rw	rw	rw	rw	rw	rw	rw	rw	rw	rw	rw	rw	rw	rw	rw	rw

Bits 31:0 **RBAP1 / RTSL:** Receive buffer 1 address pointer / Receive frame time stamp low

These bits take on two different functions: the application uses them to indicate to the DMA where to store the data in memory, and then after transferring all the data the DMA may use these bits to pass back time stamp data.

RBAP1: When the software makes this descriptor available to the DMA (at the moment that the OWN bit is set to 1 in RDES0), these bits indicate the physical address of Buffer 1. There are no limitations on the buffer address alignment except for the following condition: the DMA uses the configured value for its address generation when the RDES2 value is used to store the start of frame. Note that the DMA performs a write operation with the RDES2[3/2/1:0] bits as 0 during the transfer of the start of frame but the frame data is shifted as per the actual Buffer address pointer. The DMA ignores RDES2[3/2/1:0] (corresponding to bus width of 128/64/32) if the address pointer is to a buffer where the middle or last part of the frame is stored.

RTSL: Before it clears the OWN bit in RDES0, the DMA updates this field with the 32 least significant bits of the time stamp captured for the corresponding receive frame (overwriting the value for RBAP1). This field has the time stamp only if time stamping is activated for this frame and if the Last segment control bit (LS) in the descriptor is set.

- **RDES3: Receive descriptor Word3**

  RDES3 contains the address pointer either to the second data buffer in the descriptor or to the next descriptor, or it contains time stamp data.

31	30	29	28	27	26	25	24	23	22	21	20	19	18	17	16	15	14	13	12	11	10	9	8	7	6	5	4	3	2	1	0
RBP2 / RTSH																															
rw	rw	rw	rw	rw	rw	rw	rw	rw	rw	rw	rw	rw	rw	rw	rw	rw	rw	rw	rw	rw	rw	rw	rw	rw	rw	rw	rw	rw	rw	rw	rw

Bits 31:0 **RBAP2 / RTSH:** Receive buffer 2 address pointer (next descriptor address) / Receive frame time stamp high

These bits take on two different functions: the application uses them to indicate to the DMA the location of where to store the data in memory, and then after transferring all the data the DMA may use these bits to pass back time stamp data.

RBAP1: When the software makes this descriptor available to the DMA (at the moment that the OWN bit is set to 1 in RDES0), these bits indicate the physical address of buffer 2 when a descriptor ring structure is used. If the second address chained (RDES1 [24]) bit is set, this address contains the pointer to the physical memory where the next descriptor is present. If RDES1 [24] is set, the buffer (next descriptor) address pointer must be bus width-aligned (RDES3[3, 2, or 1:0] = 0, corresponding to a bus width of 128, 64 or 32. LSBs are ignored internally.) However, when RDES1 [24] is reset, there are no limitations on the RDES3 value, except for the following condition: the DMA uses the configured value for its buffer address generation when the RDES3 value is used to store the start of frame. The DMA ignores RDES3[3, 2, or 1:0] (corresponding to a bus width of 128, 64 or 32) if the address pointer is to a buffer where the middle or last part of the frame is stored.

RTSH: Before it clears the OWN bit in RDES0, the DMA updates this field with the 32 most significant bits of the time stamp captured for the corresponding receive frame (overwriting the value for RBAP2). This field has the time stamp only if time stamping is activated and if the Last segment control bit (LS) in the descriptor is set.

Enhanced Rx DMA descriptors format with IEEE1588 time stamp

Enhanced descriptors (enabled with EDFE=1, ETHDMABMR bit 7), must be used if time stamping is activated (TSE=1, ETH_PTPTSCR bit 0) or if IPv4 checksum offload is activated (IPCO=1, ETH_MACCR bit 10).

Enhanced descriptors comprise eight 32-bit words, twice the size of normal descriptors. RDES0, RDES1, RDES2 and RDES3 have the same definitions as for normal receive descriptors (refer to *Normal Rx DMA descriptors*). RDES4 contains extended status while RDES6 and RDES7 hold the time stamp. RDES4, RDES5, RDES6 and RDES7 are defined below.

When the Enhanced descriptor mode is selected, the software needs to allocate 32 bytes (8 words) of memory for every descriptor. When time stamping or IPv4 checksum offload are not being used, the enhanced descriptor format may be disabled and the software can use normal descriptors with the default size of 16 bytes.

Figure 383. Enhanced receive descriptor field format with IEEE1588 time stamp enabled

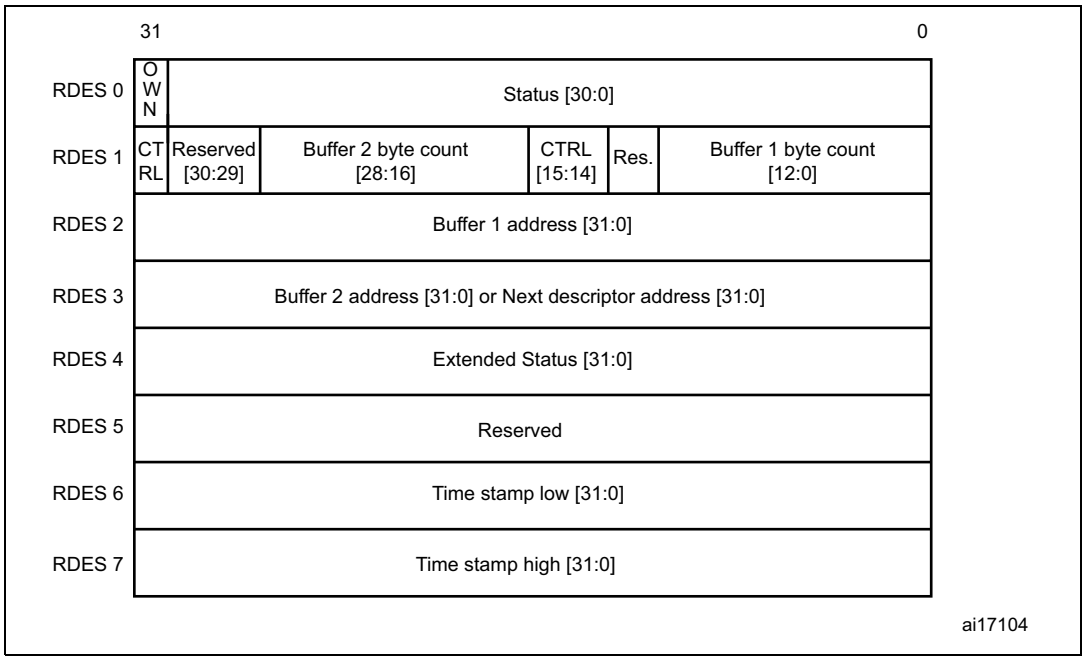

- RDES4: Receive descriptor Word4

The extended status, shown below, is valid only when there is status related to IPv4 checksum or time stamp available as indicated by bit 0 in RDES0.

31	30	29	28	27	26	25	24	23	22	21	20	19	18	17	16	15	14	13	12	11	10	9	8	7	6	5	4	3	2	1	0
Reserved																		PV	PFT	PMT				IPV6PR	IPV4PR	IPCB	IPPE	IPHE	IPPT		
																		rw	rw	rw	rw	rw	rw	rw	rw	rw	rw	rw	rw	rw	rw

Bits 31:14 Reserved, must be kept at reset value.

Bit 13 **PV:** PTP version

When set, indicates that the received PTP message uses the IEEE 1588 version 2 format. When cleared, it uses version 1 format. This is valid only if the message type is non-zero.

Bit 12 **PFT:** PTP frame type

When set, this bit indicates that the PTP message is sent directly over Ethernet. When this bit is cleared and the message type is non-zero, it indicates that the PTP message is sent over UDP-IPv4 or UDP-IPv6. The information on IPv4 or IPv6 can be obtained from bits 6 and 7.

Bits 11:8 **PMT:** PTP message type

These bits are encoded to give the type of the message received.

– 0000: No PTP message received
– 0001: SYNC (all clock types)
– 0010: Follow_Up (all clock types)
– 0011: Delay_Req (all clock types)
– 0100: Delay_Resp (all clock types)
– 0101: Pdelay_Req (in peer-to-peer transparent clock) or Announce (in ordinary or boundary clock)
– 0110: Pdelay_Resp (in peer-to-peer transparent clock) or Management (in ordinary or boundary clock)
– 0111: Pdelay_Resp_Follow_Up (in peer-to-peer transparent clock) or Signaling (for ordinary or boundary clock)
– 1xxx - Reserved

Bit 7 **IPV6PR:** IPv6 packet received

When set, this bit indicates that the received packet is an IPv6 packet.

Bit 6 **IPV4PR:** IPv4 packet received

When set, this bit indicates that the received packet is an IPv4 packet.

Bit 5 **IPCB:** IP checksum bypassed

When set, this bit indicates that the checksum offload engine is bypassed.

Bit 4 **IPPE:** IP payload error

When set, this bit indicates that the 16-bit IP payload checksum (that is, the TCP, UDP, or ICMP checksum) that the core calculated does not match the corresponding checksum field in the received segment. It is also set when the TCP, UDP, or ICMP segment length does not match the payload length value in the IP Header field.

Bit 3 **IPHE:** IP header error

When set, this bit indicates either that the 16-bit IPv4 header checksum calculated by the core does not match the received checksum bytes, or that the IP datagram version is not consistent with the Ethernet Type value.

Bits 2:0 **IPPT:** IP payload type

if IPv4 checksum offload is activated (IPCO=1, ETH_MACCR bit 10), these bits indicate the type of payload encapsulated in the IP datagram. These bits are ‘00’ if there is an IP header error or fragmented IP.

– 000: Unknown or did not process IP payload
– 001: UDP
– 010: TCP
– 011: ICMP
– 1xx: Reserved

- RDES5: Receive descriptor Word5

  Reserved.

- **RDES6: Receive descriptor Word6**

  The table below describes the fields that have different meaning for RDES6 when the receive descriptor is closed and time stamping is enabled.

31	30	29	28	27	26	25	24	23	22	21	20	19	18	17	16	15	14	13	12	11	10	9	8	7	6	5	4	3	2	1	0
RTSL																															
rw	rw	rw	rw	rw	rw	rw	rw	rw	rw	rw	rw	rw	rw	rw	rw	rw	rw	rw	rw	rw	rw	rw	rw	rw	rw	rw	rw	rw	rw	rw	rw

Bits 31:0 **RTSL:** Receive frame time stamp low

The DMA updates this field with the 32 least significant bits of the time stamp captured for the corresponding receive frame. The DMA updates this field only for the last descriptor of the receive frame indicated by last descriptor status bit (RDES0[8]). When this field and the RTSH field in RDES7 show all ones, the time stamp must be treated as corrupt.

- **RDES7: Receive descriptor Word7**

  The table below describes the fields that have a different meaning for RDES7 when the receive descriptor is closed and time stamping is enabled.

31	30	29	28	27	26	25	24	23	22	21	20	19	18	17	16	15	14	13	12	11	10	9	8	7	6	5	4	3	2	1	0
RTSH																															
rw	rw	rw	rw	rw	rw	rw	rw	rw	rw	rw	rw	rw	rw	rw	rw	rw	rw	rw	rw	rw	rw	rw	rw	rw	rw	rw	rw	rw	rw	rw	rw

Bits 31:0 **RTSH:** Receive frame time stamp high

The DMA updates this field with the 32 most significant bits of the time stamp captured for the corresponding receive frame. The DMA updates this field only for the last descriptor of the receive frame indicated by last descriptor status bit (RDES0[8]).

When this field and RDES7's RTSL field show all ones, the time stamp must be treated as corrupt.

33.6.9 DMA interrupts

Interrupts can be generated as a result of various events. The ETH_DMASR register contains all the bits that might cause an interrupt. The ETH_DMAIER register contains an enable bit for each of the events that can cause an interrupt.

There are two groups of interrupts, Normal and Abnormal, as described in the ETH_DMASR register. Interrupts are cleared by writing a 1 to the corresponding bit position. When all the enabled interrupts within a group are cleared, the corresponding summary bit is cleared. If the MAC core is the cause for assertion of the interrupt, then any of the TSTS or PMTS bits in the ETH_DMASR register is set high.

Interrupts are not queued and if the interrupt event occurs before the driver has responded to it, no additional interrupts are generated. For example, the Receive Interrupt bit (ETH_DMASR register [6]) indicates that one or more frames were transferred to the STM32F4xx buffer. The driver must scan all descriptors, from the last recorded position to the first one owned by the DMA.

An interrupt is generated only once for simultaneous, multiple events. The driver must scan the ETH_DMASR register for the cause of the interrupt. The interrupt is not generated again unless a new interrupting event occurs, after the driver has cleared the appropriate bit in the ETH_DMASR register. For example, the controller generates a Receive interrupt (ETH_DMASR register[6]) and the driver begins reading the ETH_DMASR register. Next, receive buffer unavailable (ETH_DMASR register[7]) occurs. The driver clears the Receive interrupt. Even then, a new interrupt is generated, due to the active or pending Receive buffer unavailable interrupt.

Figure 384. Interrupt scheme

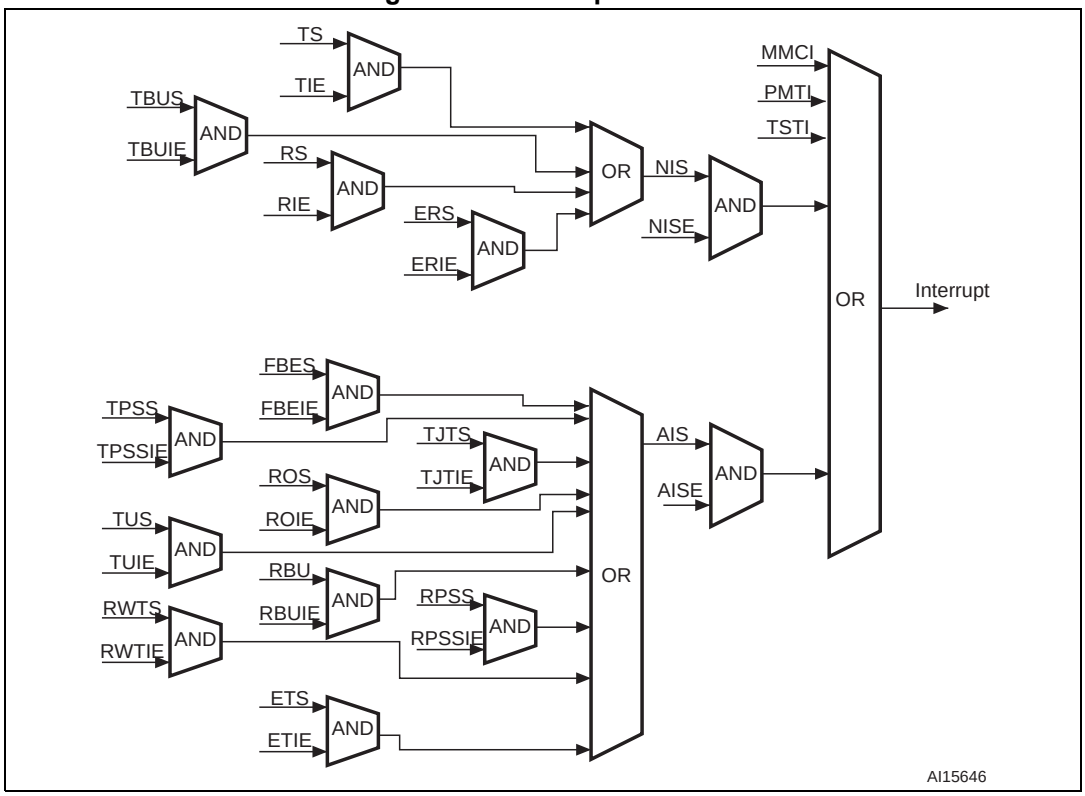

33.7 Ethernet interrupts

The Ethernet controller has two interrupt vectors: one dedicated to normal Ethernet operations and the other, used only for the Ethernet wakeup event (with wakeup frame or Magic Packet detection) when it is mapped on EXTI lIne19.

The first Ethernet vector is reserved for interrupts generated by the MAC and the DMA as listed in the *MAC interrupts* and *DMA interrupts* sections.

The second vector is reserved for interrupts generated by the PMT on wakeup events. The mapping of a wakeup event on EXTI line19 causes the STM32F4xx to exit the low-power mode, and generates an interrupt.

When an Ethernet wakeup event mapped on EXTI Line19 occurs and the MAC PMT interrupt is enabled and the EXTI Line19 interrupt, with detection on rising edge, is also enabled, both interrupts are generated.

A watchdog timer (see ETH_DMARSWTR register) is given for flexible control of the RS bit (ETH_DMASR register). When this watchdog timer is programmed with a non-zero value, it gets activated as soon as the RxDMA completes a transfer of a received frame to system memory without asserting the Receive Status because it is not enabled in the corresponding Receive descriptor (RDES1[31]). When this timer runs out as per the programmed value, the RS bit is set and the interrupt is asserted if the corresponding RIE is enabled in the ETH_DMAIER register. This timer is disabled before it runs out, when a frame is transferred to memory and the RS is set because it is enabled for that descriptor.

Note: Reading the PMT control and status register automatically clears the Wakeup Frame Received and Magic Packet Received PMT interrupt flags. However, since the registers for these flags are in the CLK_RX domain, there may be a significant delay before this update is visible by the firmware. The delay is especially long when the RX clock is slow (in 10 Mbit mode) and when the AHB bus is high-frequency.
Since interrupt requests from the PMT to the CPU are based on the same registers in the CLK_RX domain, the CPU may spuriously call the interrupt routine a second time even after reading PMT_CSR. Thus, it may be necessary that the firmware polls the Wakeup Frame Received and Magic Packet Received bits and exits the interrupt service routine only when they are found to be at '0'.

33.8 Ethernet register descriptions

The peripheral registers can be accessed by bytes (8-bit), half-words (16-bit) or words (32-bits).

33.8.1 MAC register description

Ethernet MAC configuration register (ETH_MACCR)

Address offset: 0x0000

Reset value: 0x0000 8000

The MAC configuration register is the operation mode register of the MAC. It establishes receive and transmit operating modes.

31	30	29	28	27	26	25	24	23	22	21	20	19	18	17	16	15	14	13	12	11	10	9	8	7	6	5	4	3	2	1	0
Reserved						CSTF	Reserved	WD	JD	Reserved		IFG			CSD	Reserved	FES	ROD	LM	DM	IPCO	RD	Reserved	APCS	BL		DC	TE	RE	Reserved	
						rw		rw	rw			rw			rw		rw	rw	rw	rw	rw	rw		rw	rw		rw	rw	rw		

Bits 31:26 Reserved, must be kept at reset value.

CSTF: CRC stripping for Type frames

Bit 25 When set, the last 4 bytes (FCS) of all frames of Ether type (type field greater than 0x0600) will be stripped and dropped before forwarding the frame to the application.

Bit 24 Reserved, must be kept at reset value.

Bit 23 **WD:** Watchdog disable

When this bit is set, the MAC disables the watchdog timer on the receiver, and can receive frames of up to 16 384 bytes.

When this bit is reset, the MAC allows no more than 2 048 bytes of the frame being received and cuts off any bytes received after that.

Bit 22 **JD:** Jabber disable

When this bit is set, the MAC disables the jabber timer on the transmitter, and can transfer frames of up to 16 384 bytes.

When this bit is reset, the MAC cuts off the transmitter if the application sends out more than 2 048 bytes of data during transmission.

Bits 21:20 Reserved, must be kept at reset value.

Bits 19:17 **IFG:** Interframe gap

These bits control the minimum interframe gap between frames during transmission.

000: 96 bit times
001: 88 bit times
010: 80 bit times
….
111: 40 bit times

Note: In Half-duplex mode, the minimum IFG can be configured for 64 bit times (IFG = 100) only. Lower values are not considered.

Bit 16 **CSD:** Carrier sense disable

When set high, this bit makes the MAC transmitter ignore the MII CRS signal during frame transmission in Half-duplex mode. No error is generated due to Loss of Carrier or No Carrier during such transmission.

When this bit is low, the MAC transmitter generates such errors due to Carrier Sense and even aborts the transmissions.

Bit 15 Reserved, must be kept at reset value.

Bit 14 **FES:** Fast Ethernet speed

Indicates the speed in Fast Ethernet (MII) mode:
0: 10 Mbit/s
1: 100 Mbit/s

Bit 13 **ROD:** Receive own disable

When this bit is set, the MAC disables the reception of frames in Half-duplex mode.

When this bit is reset, the MAC receives all packets that are given by the PHY while transmitting.

This bit is not applicable if the MAC is operating in Full-duplex mode.

Bit 12 **LM:** Loopback mode

When this bit is set, the MAC operates in loopback mode at the MII. The MII receive clock input (RX_CLK) is required for the loopback to work properly, as the transmit clock is not looped-back internally.

Bit 11 **DM:** Duplex mode

When this bit is set, the MAC operates in a Full-duplex mode where it can transmit and receive simultaneously.

Bit 10 **IPCO:** IPv4 checksum offload

When set, this bit enables IPv4 checksum checking for received frame payloads' TCP/UDP/ICMP headers. When this bit is reset, the checksum offload function in the receiver is disabled and the corresponding PCE and IP HCE status bits (see *Table 190*) are always cleared.

Bit 9 **RD:** Retry disable

When this bit is set, the MAC attempts only 1 transmission. When a collision occurs on the MII, the MAC ignores the current frame transmission and reports a Frame Abort with excessive collision error in the transmit frame status.

When this bit is reset, the MAC attempts retries based on the settings of BL.

Note: This bit is applicable only in the Half-duplex mode.

Bit 8 Reserved, must be kept at reset value.

Bit 7 **APCS:** Automatic pad/CRC stripping

When this bit is set, the MAC strips the Pad/FCS field on incoming frames only if the length's field value is less than or equal to 1 500 bytes. All received frames with length field greater than or equal to 1 501 bytes are passed on to the application without stripping the Pad/FCS field.

When this bit is reset, the MAC passes all incoming frames unmodified.

Bits 6:5 **BL:** Back-off limit

The Back-off limit determines the random integer number (r) of slot time delays (4 096 bit times for 1000 Mbit/s and 512 bit times for 10/100 Mbit/s) the MAC waits before rescheduling a transmission attempt during retries after a collision.

Note: This bit is applicable only to Half-duplex mode.

00: k = min (*n*, 10)

01: k = min (*n*, 8)

10: k = min (*n*, 4)

11: k = min (*n*, 1),

where *n* = retransmission attempt. The random integer *r* takes the value in the range $0 \leq r < 2^k$

Bit 4 **DC:** Deferral check

When this bit is set, the deferral check function is enabled in the MAC. The MAC issues a Frame Abort status, along with the excessive deferral error bit set in the transmit frame status when the transmit state machine is deferred for more than 24 288 bit times in 10/100-Mbit/s mode. Deferral begins when the transmitter is ready to transmit, but is prevented because of an active CRS (carrier sense) signal on the MII. Defer time is not cumulative. If the transmitter defers for 10 000 bit times, then transmits, collides, backs off, and then has to defer again after completion of back-off, the deferral timer resets to 0 and restarts.

When this bit is reset, the deferral check function is disabled and the MAC defers until the CRS signal goes inactive. This bit is applicable only in Half-duplex mode.

Bit 3 **TE:** Transmitter enable

When this bit is set, the transmit state machine of the MAC is enabled for transmission on the MII. When this bit is reset, the MAC transmit state machine is disabled after the completion of the transmission of the current frame, and does not transmit any further frames.

Bit 2 **RE:** Receiver enable

When this bit is set, the receiver state machine of the MAC is enabled for receiving frames from the MII. When this bit is reset, the MAC receive state machine is disabled after the completion of the reception of the current frame, and will not receive any further frames from the MII.

Bits 1:0 Reserved, must be kept at reset value.

Ethernet MAC frame filter register (ETH_MACFFR)

Address offset: 0x0004
Reset value: 0x0000 0000

The MAC frame filter register contains the filter controls for receiving frames. Some of the controls from this register go to the address check block of the MAC, which performs the first level of address filtering. The second level of filtering is performed on the incoming frame, based on other controls such as pass bad frames and pass control frames.

31	30	29	28	27	26	25	24	23	22	21	20	19	18	17	16	15	14	13	12	11	10	9	8	7	6	5	4	3	2	1	0
RA	Reserved																				HPF	SAF	SAIF	PCF		BFD	PAM	DAIF	HM	HU	PM
rw																					rw	rw	rw	rw	rw	rw	rw	rw	rw	rw	rw

Bit 31 **RA:** Receive all

When this bit is set, the MAC receiver passes all received frames on to the application, irrespective of whether they have passed the address filter. The result of the SA/DA filtering is updated (pass or fail) in the corresponding bits in the receive status word. When this bit is reset, the MAC receiver passes on to the application only those frames that have passed the SA/DA address filter.

Bits 30:11 Reserved, must be kept at reset value.

Bit 10 **HPF:** Hash or perfect filter

When this bit is set and if the HM or HU bit is set, the address filter passes frames that match either the perfect filtering or the hash filtering.

When this bit is cleared and if the HU or HM bit is set, only frames that match the Hash filter are passed.

Bit 9 **SAF:** Source address filter

The MAC core compares the SA field of the received frames with the values programmed in the enabled SA registers. If the comparison matches, then the SAMatch bit in the RxStatus word is set high. When this bit is set high and the SA filter fails, the MAC drops the frame. When this bit is reset, the MAC core forwards the received frame to the application. It also forwards the updated SA Match bit in RxStatus depending on the SA address comparison.

Bit 8 **SAIF:** Source address inverse filtering

When this bit is set, the address check block operates in inverse filtering mode for the SA address comparison. The frames whose SA matches the SA registers are marked as failing the SA address filter.

When this bit is reset, frames whose SA does not match the SA registers are marked as failing the SA address filter.

Bits 7:6 **PCF:** Pass control frames

These bits control the forwarding of all control frames (including unicast and multicast PAUSE frames). Note that the processing of PAUSE control frames depends only on RFCE in Flow Control Register[2].

00: MAC prevents all control frames from reaching the application

01: MAC forwards all control frames to application except Pause control frames

10: MAC forwards all control frames to application even if they fail the address filter

11: MAC forwards control frames that pass the address filter.

These bits control the forwarding of all control frames (including unicast and multicast PAUSE frames). Note that the processing of PAUSE control frames depends only on RFCE in Flow Control Register[2].

00 or 01: MAC prevents all control frames from reaching the application

10: MAC forwards all control frames to application even if they fail the address filter

11: MAC forwards control frames that pass the address filter.

Bit 5 **BFD:** Broadcast frames disable

When this bit is set, the address filters filter all incoming broadcast frames.

When this bit is reset, the address filters pass all received broadcast frames.

Bit 4 **PAM:** Pass all multicast

When set, this bit indicates that all received frames with a multicast destination address (first bit in the destination address field is '1') are passed.

When reset, filtering of multicast frame depends on the HM bit.

Bit 3 **DAIF:** Destination address inverse filtering

When this bit is set, the address check block operates in inverse filtering mode for the DA address comparison for both unicast and multicast frames.

When reset, normal filtering of frames is performed.

Bit 2 **HM:** Hash multicast

When set, MAC performs destination address filtering of received multicast frames according to the hash table.

When reset, the MAC performs a perfect destination address filtering for multicast frames, that is, it compares the DA field with the values programmed in DA registers.

Bit 1 **HU:** Hash unicast

When set, MAC performs destination address filtering of unicast frames according to the hash table.

When reset, the MAC performs a perfect destination address filtering for unicast frames, that is, it compares the DA field with the values programmed in DA registers.

Bit 0 **PM:** Promiscuous mode

When this bit is set, the address filters pass all incoming frames regardless of their destination or source address. The SA/DA filter fails status bits in the receive status word are always cleared when PM is set.

Ethernet MAC hash table high register (ETH_MACHTHR)

Address offset: 0x0008

Reset value: 0x0000 0000

The 64-bit Hash table is used for group address filtering. For hash filtering, the contents of the destination address in the incoming frame are passed through the CRC logic, and the upper 6 bits in the CRC register are used to index the contents of the Hash table. This CRC is a 32-bit value coded by the following polynomial (for more details refer to *Section 33.5.3*):

$$G(x) = x^{32} + x^{26} + x^{23} + x^{22} + x^{16} + x^{12} + x^{11} + x^{10} + x^{8} + x^{7} + x^{5} + x^{4} + x^{2} + x + 1$$

The most significant bit determines the register to be used (hash table high/hash table low), and the other 5 bits determine which bit within the register. A hash value of 0b0 0000 selects bit 0 in the selected register, and a value of 0b1 1111 selects bit 31 in the selected register.

For example, if the DA of the incoming frame is received as 0x1F52 419C B6AF (0x1F is the first byte received on the MII interface), then the internally calculated 6-bit Hash value is 0x2C and the HTH register bit[12] is checked for filtering. If the DA of the incoming frame is received as 0xA00A 9800 0045, then the calculated 6-bit Hash value is 0x07 and the HTL register bit[7] is checked for filtering.

If the corresponding bit value in the register is 1, the frame is accepted. Otherwise, it is rejected. If the PAM (pass all multicast) bit is set in the ETH_MACFFR register, then all multicast frames are accepted regardless of the multicast hash values.

The Hash table high register contains the higher 32 bits of the multicast Hash table.

31	30	29	28	27	26	25	24	23	22	21	20	19	18	17	16	15	14	13	12	11	10	9	8	7	6	5	4	3	2	1	0
HTH																															
rw	rw	rw	rw	rw	rw	rw	rw	rw	rw	rw	rw	rw	rw	rw	rw	rw	rw	rw	rw	rw	rw	rw	rw	rw	rw	rw	rw	rw	rw	rw	rw

Bits 31:0 **HTH:** Hash table high
This field contains the upper 32 bits of Hash table.

Ethernet MAC hash table low register (ETH_MACHTLR)

Address offset: 0x000C

Reset value: 0x0000 0000

The Hash table low register contains the lower 32 bits of the multi-cast Hash table.

31	30	29	28	27	26	25	24	23	22	21	20	19	18	17	16	15	14	13	12	11	10	9	8	7	6	5	4	3	2	1	0
HTL																															
rw	rw	rw	rw	rw	rw	rw	rw	rw	rw	rw	rw	rw	rw	rw	rw	rw	rw	rw	rw	rw	rw	rw	rw	rw	rw	rw	rw	rw	rw	rw	rw

Bits 31:0 **HTL:** Hash table low
This field contains the lower 32 bits of the Hash table.

Ethernet MAC MII address register (ETH_MACMIIAR)

Address offset: 0x0010

Reset value: 0x0000 0000

The MII address register controls the management cycles to the external PHY through the management interface.

31	30	29	28	27	26	25	24	23	22	21	20	19	18	17	16	15	14	13	12	11	10	9	8	7	6	5	4	3	2	1	0
Reserved																PA					MR					Reserved	CR			MW	MB
																rw	rw	rw	rw	rw	rw	rw	rw	rw	rw		rw	rw	rw	rw	rc_w1

Bits 31:16 Reserved, must be kept at reset value.

Bits 15:11 **PA:** PHY address

This field tells which of the 32 possible PHY devices are being accessed.

Bits 10:6 **MR:** MII register

These bits select the desired MII register in the selected PHY device.

Bit 5 Reserved, must be kept at reset value.

Bits 4:2 **CR:** Clock range

The CR clock range selection determines the HCLK frequency and is used to decide the frequency of the MDC clock:
Selection HCLK MDC Clock
000 60-100 MHz HCLK/42
001 100-150 MHzHCLK/62
010 20-35 MHz HCLK/16
011 35-60 MHz HCLK/26
100 150-168 MHz HCLK/102
101, 110, 111 Reserved -

Bit 1 **MW:** MII write

When set, this bit tells the PHY that this will be a Write operation using the MII Data register. If this bit is not set, this will be a Read operation, placing the data in the MII Data register.

Bit 0 **MB:** MII busy

This bit should read a logic 0 before writing to ETH_MACMIIAR and ETH_MACMIIDR. This bit must also be reset to 0 during a Write to ETH_MACMIIAR. During a PHY register access, this bit is set to 0b1 by the application to indicate that a read or write access is in progress. ETH_MACMIIDR (MII Data) should be kept valid until this bit is cleared by the MAC during a PHY Write operation. The ETH_MACMIIDR is invalid until this bit is cleared by the MAC during a PHY Read operation. The ETH_MACMIIAR (MII Address) should not be written to until this bit is cleared.

Ethernet MAC MII data register (ETH_MACMIIDR)

Address offset: 0x0014

Reset value: 0x0000 0000

The MAC MII Data register stores write data to be written to the PHY register located at the address specified in ETH_MACMIIAR. ETH_MACMIIDR also stores read data from the PHY register located at the address specified by ETH_MACMIIAR.

31	30	29	28	27	26	25	24	23	22	21	20	19	18	17	16	15	14	13	12	11	10	9	8	7	6	5	4	3	2	1	0
Reserved																MD															
																rw	rw	rw	rw	rw	rw	rw	rw	rw	rw	rw	rw	rw	rw	rw	rw

Bits 31:16 Reserved, must be kept at reset value.

Bits 15:0 **MD:** MII data

This contains the 16-bit data value read from the PHY after a Management Read operation, or the 16-bit data value to be written to the PHY before a Management Write operation.

Ethernet MAC flow control register (ETH_MACFCR)

Address offset: 0x0018

Reset value: 0x0000 0000

The Flow control register controls the generation and reception of the control (Pause Command) frames by the MAC. A write to a register with the Busy bit set to '1' causes the MAC to generate a pause control frame. The fields of the control frame are selected as specified in the 802.3x specification, and the Pause Time value from this register is used in the Pause Time field of the control frame. The Busy bit remains set until the control frame is transferred onto the cable. The Host must make sure that the Busy bit is cleared before writing to the register.

31	30	29	28	27	26	25	24	23	22	21	20	19	18	17	16	15	14	13	12	11	10	9	8	7	6	5	4	3	2	1	0
PT																Reserved								ZQPD	Reserved	PLT		UPFD	RFCE	TFCE	FCB/ BPA
rw	rw	rw	rw	rw	rw	rw	rw	rw	rw	rw	rw	rw	rw	rw	rw									rw		rw	rw	rw	rw	rw	rc_w1 /rw

Bits 31:16 **PT:** Pause time

This field holds the value to be used in the Pause Time field in the transmit control frame. If the Pause Time bits is configured to be double-synchronized to the MII clock domain, then consecutive write operations to this register should be performed only after at least 4 clock cycles in the destination clock domain.

Bits 15:8 Reserved, must be kept at reset value.

Bit 7 **ZQPD:** Zero-quanta pause disable

When set, this bit disables the automatic generation of Zero-quanta pause control frames on the deassertion of the flow-control signal from the FIFO layer.

When this bit is reset, normal operation with automatic Zero-quanta pause control frame generation is enabled.

Bit 6 Reserved, must be kept at reset value.

Bits 5:4 **PLT:** Pause low threshold

This field configures the threshold of the Pause timer at which the Pause frame is automatically retransmitted. The threshold values should always be less than the Pause Time configured in bits[31:16]. For example, if PT = 100H (256 slot-times), and PLT = 01, then a second PAUSE frame is automatically transmitted if initiated at 228 (256 – 28) slot-times after the first PAUSE frame is transmitted.

Selection Threshold

00 Pause time minus 4 slot times

01 Pause time minus 28 slot times

10 Pause time minus 144 slot times

11 Pause time minus 256 slot times

Slot time is defined as time taken to transmit 512 bits (64 bytes) on the MII interface.

Bit 3 **UPFD:** Unicast pause frame detect

When this bit is set, the MAC detects the Pause frames with the station's unicast address specified in the ETH_MACA0HR and ETH_MACA0LR registers, in addition to detecting Pause frames with the unique multicast address.

When this bit is reset, the MAC detects only a Pause frame with the unique multicast address specified in the 802.3x standard.

Bit 2 **RFCE:** Receive flow control enable

When this bit is set, the MAC decodes the received Pause frame and disables its transmitter for a specified (Pause Time) time.

When this bit is reset, the decode function of the Pause frame is disabled.

Bit 1 **TFCE:** Transmit flow control enable

In Full-duplex mode, when this bit is set, the MAC enables the flow control operation to transmit Pause frames. When this bit is reset, the flow control operation in the MAC is disabled, and the MAC does not transmit any Pause frames.

In Half-duplex mode, when this bit is set, the MAC enables the back-pressure operation. When this bit is reset, the back pressure feature is disabled.

Bit 0 **FCB/BPA:** Flow control busy/back pressure activate

This bit initiates a Pause Control frame in Full-duplex mode and activates the back pressure function in Half-duplex mode if TFCE bit is set.

In Full-duplex mode, this bit should be read as 0 before writing to the Flow control register. To initiate a Pause control frame, the Application must set this bit to 1. During a transfer of the Control frame, this bit continues to be set to signify that a frame transmission is in progress. After completion of the Pause control frame transmission, the MAC resets this bit to 0. The Flow control register should not be written to until this bit is cleared.

In Half-duplex mode, when this bit is set (and TFCE is set), back pressure is asserted by the MAC core. During back pressure, when the MAC receives a new frame, the transmitter starts sending a JAM pattern resulting in a collision. When the MAC is configured to Full-duplex mode, the BPA is automatically disabled.

Ethernet MAC VLAN tag register (ETH_MACVLANTR)

Address offset: 0x001C

Reset value: 0x0000 0000

The VLAN tag register contains the IEEE 802.1Q VLAN Tag to identify the VLAN frames. The MAC compares the 13th and 14th bytes of the receiving frame (Length/Type) with 0x8100, and the following 2 bytes are compared with the VLAN tag; if a match occurs, the received VLAN bit in the receive frame status is set. The legal length of the frame is increased from 1518 bytes to 1522 bytes.

31	30	29	28	27	26	25	24	23	22	21	20	19	18	17	16	15	14	13	12	11	10	9	8	7	6	5	4	3	2	1	0
Reserved															VLANTC	VLANTI															
															rw	rw	rw	rw	rw	rw	rw	rw	rw	rw	rw	rw	rw	rw	rw	rw	rw

Bits 31:17 Reserved, must be kept at reset value.

Bit 16 **VLANTC:** 12-bit VLAN tag comparison

When this bit is set, a 12-bit VLAN identifier, rather than the complete 16-bit VLAN tag, is used for comparison and filtering. Bits[11:0] of the VLAN tag are compared with the corresponding field in the received VLAN-tagged frame.

When this bit is reset, all 16 bits of the received VLAN frame's fifteenth and sixteenth bytes are used for comparison.

Bits 15:0 **VLANTI:** VLAN tag identifier (for receive frames)

This contains the 802.1Q VLAN tag to identify VLAN frames, and is compared to the fifteenth and sixteenth bytes of the frames being received for VLAN frames. Bits[15:13] are the user priority, Bit[12] is the canonical format indicator (CFI) and bits[11:0] are the VLAN tag's VLAN identifier (VID) field. When the VLANTC bit is set, only the VID (bits[11:0]) is used for comparison.

If VLANTI (VLANTI[11:0] if VLANTC is set) is all zeros, the MAC does not check the fifteenth and sixteenth bytes for VLAN tag comparison, and declares all frames with a Type field value of 0x8100 as VLAN frames.

Ethernet MAC remote wakeup frame filter register (ETH_MACRWUFFR)

Address offset: 0x0028

Reset value: 0x0000 0000

This is the address through which the remote wakeup frame filter registers are written/read by the application. The Wakeup frame filter register is actually a pointer to eight (not transparent) such wakeup frame filter registers. Eight sequential write operations to this address with the offset (0x0028) will write all wakeup frame filter registers. Eight sequential read operations from this address with the offset (0x0028) will read all wakeup frame filter registers. This register contains the higher 16 bits of the 7th MAC address. Refer to *Remote wakeup frame filter register* section for additional information.

Figure 385. Ethernet MAC remote wakeup frame filter register (ETH_MACRWUFFR)

Wakeup frame filter reg0	Filter 0 Byte Mask							
Wakeup frame filter reg1	Filter 1 Byte Mask							
Wakeup frame filter reg2	Filter 2 Byte Mask							
Wakeup frame filter reg3	Filter 3 Byte Mask							
Wakeup frame filter reg4	RSVD	Filter 3 Command	RSVD	Filter 2 Command	RSVD	Filter 1 Command	RSVD	Filter 0 Command
Wakeup frame filter reg5	Filter 3 Offset		Filter 2 Offset		Filter 1 Offset		Filter 0 Offset	
Wakeup frame filter reg6	Filter 1 CRC - 16				Filter 0 CRC - 16			
Wakeup frame filter reg7	Filter 3 CRC - 16				Filter 2 CRC - 16			

ai15648

Ethernet MAC PMT control and status register (ETH_MACPMTCSR)

Address offset: 0x002C

Reset value: 0x0000 0000

The ETH_MACPMTCSR programs the request wakeup events and monitors the wakeup events.

31	30	29	28	27	26	25	24	23	22	21	20	19	18	17	16	15	14	13	12	11	10	9	8	7	6	5	4	3	2	1	0
WFFRPR	Reserved																					GU	Reserved		WFR	MPR	Reserved		WFE	MPE	PD
rs	Res.																					rw			rc_r	rc_r			rw	rw	rs

Bit 31 **WFFRPR:** Wakeup frame filter register pointer reset

When set, it resets the Remote wakeup frame filter register pointer to 0b000. It is automatically cleared after 1 clock cycle.

Bits 30:10 Reserved, must be kept at reset value.

Bit 9 **GU:** Global unicast

When set, it enables any unicast packet filtered by the MAC (DAF) address recognition to be a wakeup frame.

Bits 8:7 Reserved, must be kept at reset value.

Bit 6 **WFR:** Wakeup frame received

When set, this bit indicates the power management event was generated due to reception of a wakeup frame. This bit is cleared by a read into this register.

Bit 5 **MPR:** Magic packet received

When set, this bit indicates the power management event was generated by the reception of a Magic Packet. This bit is cleared by a read into this register.

Bits 4:3 Reserved, must be kept at reset value.

Bit 2 **WFE:** Wakeup frame enable

When set, this bit enables the generation of a power management event due to wakeup frame reception.

Bit 1 **MPE:** Magic Packet enable

When set, this bit enables the generation of a power management event due to Magic Packet reception.

Bit 0 **PD:** Power down

When this bit is set, all received frames will be dropped. This bit is cleared automatically when a magic packet or wakeup frame is received, and Power-down mode is disabled. Frames received after this bit is cleared are forwarded to the application. This bit must only be set when either the Magic Packet Enable or Wakeup Frame Enable bit is set high.

Ethernet MAC debug register (ETH_MACDBGR)

Address offset: 0x0034

Reset value: 0x0000 0000

This debug register gives the status of all the main modules of the transmit and receive data paths and the FIFOs. An all-zero status indicates that the MAC core is in Idle state (and FIFOs are empty) and no activity is going on in the data paths.

31	30	29	28	27	26	25	24	23	22	21	20	19	18	17	16	15	14	13	12	11	10	9	8	7	6	5	4	3	2	1	0
Reserved						TFF	TFNE	Reserved	TFWA	TFRS		MTP	MTFCS		MMTEA	Reserved						RFFL		Reserved	RFRCS		RFWRA	Reserved	MSFRWCS		MMRPEA
						ro	ro		ro	ro	ro	ro	ro	ro	ro							ro	ro		ro	ro	ro		ro	ro	ro

Bits 31:26 Reserved, must be kept at reset value.

Bit 25 **TFF:** Tx FIFO full

When high, it indicates that the Tx FIFO is full and hence no more frames will be accepted for transmission.

Bit 24 **TFNE:** Tx FIFO not empty

When high, it indicates that the TxFIFO is not empty and has some data left for transmission.

Bit 23 Reserved, must be kept at reset value.

Bit 22 **TFWA:** Tx FIFO write active

When high, it indicates that the TxFIFO write controller is active and transferring data to the TxFIFO.

Bits 21:20 **TFRS:** Tx FIFO read status

This indicates the state of the TxFIFO read controller:
00: Idle state
01: Read state (transferring data to the MAC transmitter)
10: Waiting for TxStatus from MAC transmitter
11: Writing the received TxStatus or flushing the TxFIFO

Bit 19 **MTP:** MAC transmitter in pause

When high, it indicates that the MAC transmitter is in Pause condition (in full-duplex mode only) and hence will not schedule any frame for transmission

Bits 18:17 **MTFCS:** MAC transmit frame controller status

This indicates the state of the MAC transmit frame controller:
00: Idle
01: Waiting for Status of previous frame or IFG/backoff period to be over
10: Generating and transmitting a Pause control frame (in full duplex mode)
11: Transferring input frame for transmission

Bit 16 **MMTEA:** MAC MII transmit engine active

When high, it indicates that the MAC MII transmit engine is actively transmitting data and that it is not in the Idle state.

Bits 15:10 Reserved, must be kept at reset value.

Bits 9:8 **RFFL:** Rx FIFO fill level

This gives the status of the Rx FIFO fill-level:
00: RxFIFO empty
01: RxFIFO fill-level below flow-control de-activate threshold
10: RxFIFO fill-level above flow-control activate threshold
11: RxFIFO full

Bit 7 Reserved, must be kept at reset value.

Bits 6:5 **RFRCS:** Rx FIFO read controller status

It gives the state of the Rx FIFO read controller:
00: IDLE state
01: Reading frame data
10: Reading frame status (or time-stamp)
11: Flushing the frame data and status

Bit 4 **RFWRA:** Rx FIFO write controller active

When high, it indicates that the Rx FIFO write controller is active and transferring a received frame to the FIFO.

Bit 3 Reserved, must be kept at reset value.

Bits 2:1 **MSFRWCS:** MAC small FIFO read / write controllers status

When high, these bits indicate the respective active state of the small FIFO read and write controllers of the MAC receive frame controller module.

Bit 0 **MMRPEA:** MAC MII receive protocol engine active

When high, it indicates that the MAC MII receive protocol engine is actively receiving data and is not in the Idle state.

Ethernet MAC interrupt status register (ETH_MACSR)

Address offset: 0x0038

Reset value: 0x0000 0000

The ETH_MACSR register contents identify the events in the MAC that can generate an interrupt.

15	14	13	12	11	10	9	8	7	6	5	4	3	2	1	0
Reserved						TSTS	Reserved		MMCTS	MMCRS	MMCS	PMTS	Reserved		
						rc_r			r	r	r	r			

Bits 15:10 Reserved, must be kept at reset value.

Bit 9 **TSTS:** Time stamp trigger status

This bit is set high when the system time value equals or exceeds the value specified in the Target time high and low registers. This bit is cleared by reading the ETH_PTPTSSR register.

Bits 8:7 Reserved, must be kept at reset value.

Bit 6 **MMCTS:** MMC transmit status

This bit is set high whenever an interrupt is generated in the ETH_MMCTIR Register. This bit is cleared when all the bits in this interrupt register (ETH_MMCTIR) are cleared.

Bit 5 **MMCRS:** MMC receive status

This bit is set high whenever an interrupt is generated in the ETH_MMCRIR register. This bit is cleared when all the bits in this interrupt register (ETH_MMCRIR) are cleared.

Bit 4 **MMCS:** MMC status

This bit is set high whenever any of bits 6:5 is set high. It is cleared only when both bits are low.

Bit 3 **PMTS:** PMT status

This bit is set whenever a Magic packet or Wake-on-LAN frame is received in Power-down mode (see bits 5 and 6 in the ETH_MACPMTCSR register *Ethernet MAC PMT control and status register (ETH_MACPMTCSR)*). This bit is cleared when both bits[6:5], of this last register, are cleared due to a read operation to the ETH_MACPMTCSR register.

Bits 2:0 Reserved, must be kept at reset value.

Ethernet MAC interrupt mask register (ETH_MACIMR)

Address offset: 0x003C

Reset value: 0x0000 0000

The ETH_MACIMR register bits make it possible to mask the interrupt signal due to the corresponding event in the ETH_MACSR register.

15	14	13	12	11	10	9	8	7	6	5	4	3	2	1	0
Reserved						TSTIM	Reserved					PMTIM	Reserved		
						rw						rw			

Bits 15:10 Reserved, must be kept at reset value.

Bit 9 **TSTIM:** Time stamp trigger interrupt mask
When set, this bit disables the time stamp interrupt generation.

Bits 8:4 Reserved, must be kept at reset value.

Bit 3 **PMTIM:** PMT interrupt mask
When set, this bit disables the assertion of the interrupt signal due to the setting of the PMT Status bit in ETH_MACSR.

Bits 2:0 Reserved, must be kept at reset value.

Ethernet MAC address 0 high register (ETH_MACA0HR)

Address offset: 0x0040

Reset value: 0x8000 FFFF

The MAC address 0 high register holds the upper 16 bits of the 6-byte first MAC address of the station. Note that the first DA byte that is received on the MII interface corresponds to the LS Byte (bits [7:0]) of the MAC address low register. For example, if 0x1122 3344 5566 is received (0x11 is the first byte) on the MII as the destination address, then the MAC address 0 register [47:0] is compared with 0x6655 4433 2211.

31	30	29	28	27	26	25	24	23	22	21	20	19	18	17	16	15	14	13	12	11	10	9	8	7	6	5	4	3	2	1	0
MO	Reserved															MACA0H															
1																rw	rw	rw	rw	rw	rw	rw	rw	rw	rw	rw	rw	rw	rw	rw	rw

Bit 31 **MO:** Always 1.

Bits 30:16 Reserved, must be kept at reset value.

Bits 15:0 **MACA0H:** MAC address0 high [47:32]
This field contains the upper 16 bits (47:32) of the 6-byte MAC address0. This is used by the MAC for filtering for received frames and for inserting the MAC address in the transmit flow control (Pause) frames.

Ethernet MAC address 0 low register (ETH_MACA0LR)

Address offset: 0x0044

Reset value: 0xFFFF FFFF

The MAC address 0 low register holds the lower 32 bits of the 6-byte first MAC address of the station.

31	30	29	28	27	26	25	24	23	22	21	20	19	18	17	16	15	14	13	12	11	10	9	8	7	6	5	4	3	2	1	0
MACA0L																															
rw	rw	rw	rw	rw	rw	rw	rw	rw	rw	rw	rw	rw	rw	rw	rw	rw	rw	rw	rw	rw	rw	rw	rw	rw	rw	rw	rw	rw	rw	rw	rw

Bits 31:0 **MACA0L:** MAC address0 low [31:0]

This field contains the lower 32 bits of the 6-byte MAC address0. This is used by the MAC for filtering for received frames and for inserting the MAC address in the transmit flow control (Pause) frames.

Ethernet MAC address 1 high register (ETH_MACA1HR)

Address offset: 0x0048

Reset value: 0x0000 FFFF

The MAC address 1 high register holds the upper 16 bits of the 6-byte second MAC address of the station.

31	30	29	28	27	26	25	24	23	22	21	20	19	18	17	16	15	14	13	12	11	10	9	8	7	6	5	4	3	2	1	0
AE	SA	MBC						Reserved								MACA1H															
rw	rw	rw	rw	rw	rw	rw	rw									rw	rw	rw	rw	rw	rw	rw	rw	rw	rw	rw	rw	rw	rw	rw	rw

Bit 31 **AE:** Address enable

When this bit is set, the address filters use the MAC address1 for perfect filtering. When this bit is cleared, the address filters ignore the address for filtering.

Bit 30 **SA:** Source address

When this bit is set, the MAC address1[47:0] is used for comparison with the SA fields of the received frame.
When this bit is cleared, the MAC address1[47:0] is used for comparison with the DA fields of the received frame.

Bits 29:24 **MBC:** Mask byte control

These bits are mask control bits for comparison of each of the MAC address1 bytes. When they are set high, the MAC core does not compare the corresponding byte of received DA/SA with the contents of the MAC address1 registers. Each bit controls the masking of the bytes as follows:

– Bit 29: ETH_MACA1HR [15:8]
– Bit 28: ETH_MACA1HR [7:0]
– Bit 27: ETH_MACA1LR [31:24]
…
– Bit 24: ETH_MACA1LR [7:0]

Bits 23:16 Reserved, must be kept at reset value.

Bits 15:0 **MACA1H:** MAC address1 high [47:32]
This field contains the upper 16 bits (47:32) of the 6-byte second MAC address.

Ethernet MAC address1 low register (ETH_MACA1LR)

Address offset: 0x004C

Reset value: 0xFFFF FFFF

The MAC address 1 low register holds the lower 32 bits of the 6-byte second MAC address of the station.

31	30	29	28	27	26	25	24	23	22	21	20	19	18	17	16	15	14	13	12	11	10	9	8	7	6	5	4	3	2	1	0
MACA1L																															
rw	rw	rw	rw	rw	rw	rw	rw	rw	rw	rw	rw	rw	rw	rw	rw	rw	rw	rw	rw	rw	rw	rw	rw	rw	rw	rw	rw	rw	rw	rw	rw

Bits 31:0 **MACA1L:** MAC address1 low [31:0]
This field contains the lower 32 bits of the 6-byte MAC address1. The content of this field is undefined until loaded by the application after the initialization process.

Ethernet MAC address 2 high register (ETH_MACA2HR)

Address offset: 0x0050

Reset value: 0x0000 FFFF

The MAC address 2 high register holds the upper 16 bits of the 6-byte second MAC address of the station.

31	30	29	28	27	26	25	24	23	22	21	20	19	18	17	16	15	14	13	12	11	10	9	8	7	6	5	4	3	2	1	0
AE	SA	MBC						Reserved								MACA2H															
rw	rw	rw	rw	rw	rw	rw	rw									rw	rw	rw	rw	rw	rw	rw	rw	rw	rw	rw	rw	rw	rw	rw	rw

Bit 31 **AE:** Address enable

When this bit is set, the address filters use the MAC address2 for perfect filtering. When reset, the address filters ignore the address for filtering.

Bit 30 **SA:** Source address

When this bit is set, the MAC address 2 [47:0] is used for comparison with the SA fields of the received frame.

When this bit is reset, the MAC address 2 [47:0] is used for comparison with the DA fields of the received frame.

Bits 29:24 **MBC:** Mask byte control

These bits are mask control bits for comparison of each of the MAC address2 bytes. When set high, the MAC core does not compare the corresponding byte of received DA/SA with the contents of the MAC address 2 registers. Each bit controls the masking of the bytes as follows:

– Bit 29: ETH_MACA2HR [15:8]
– Bit 28: ETH_MACA2HR [7:0]
– Bit 27: ETH_MACA2LR [31:24]
…
– Bit 24: ETH_MACA2LR [7:0]

Bits 23:16 Reserved, must be kept at reset value.

Bits 15:0 **MACA2H:** MAC address2 high [47:32]

This field contains the upper 16 bits (47:32) of the 6-byte MAC address2.

Ethernet MAC address 2 low register (ETH_MACA2LR)

Address offset: 0x0054

Reset value: 0xFFFF FFFF

The MAC address 2 low register holds the lower 32 bits of the 6-byte second MAC address of the station.

31	30	29	28	27	26	25	24	23	22	21	20	19	18	17	16	15	14	13	12	11	10	9	8	7	6	5	4	3	2	1	0
MACA2L																															
rw	rw	rw	rw	rw	rw	rw	rw	rw	rw	rw	rw	rw	rw	rw	rw	rw	rw	rw	rw	rw	rw	rw	rw	rw	rw	rw	rw	rw	rw	rw	rw

Bits 31:0 **MACA2L:** MAC address2 low [31:0]

This field contains the lower 32 bits of the 6-byte second MAC address2. The content of this field is undefined until loaded by the application after the initialization process.

Ethernet MAC address 3 high register (ETH_MACA3HR)

Address offset: 0x0058

Reset value: 0x0000 FFFF

The MAC address 3 high register holds the upper 16 bits of the 6-byte second MAC address of the station.

31	30	29	28	27	26	25	24	23	22	21	20	19	18	17	16	15	14	13	12	11	10	9	8	7	6	5	4	3	2	1	0
AE	SA	MBC						Reserved								MACA3H															
rw	rw	rw	rw	rw	rw	rw	rw									rw	rw	rw	rw	rw	rw	rw	rw	rw	rw	rw	rw	rw	rw	rw	rw

Bit 31 **AE:** Address enable

When this bit is set, the address filters use the MAC address3 for perfect filtering. When this bit is cleared, the address filters ignore the address for filtering.

Bit 30 **SA:** Source address

When this bit is set, the MAC address 3 [47:0] is used for comparison with the SA fields of the received frame.

When this bit is cleared, the MAC address 3[47:0] is used for comparison with the DA fields of the received frame.

Bits 29:24 **MBC:** Mask byte control

These bits are mask control bits for comparison of each of the MAC address3 bytes. When these bits are set high, the MAC core does not compare the corresponding byte of received DA/SA with the contents of the MAC address 3 registers. Each bit controls the masking of the bytes as follows:

– Bit 29: ETH_MACA3HR [15:8]
– Bit 28: ETH_MACA3HR [7:0]
– Bit 27: ETH_MACA3LR [31:24]

…

– Bit 24: ETH_MACA3LR [7:0]

Bits 23:16 Reserved, must be kept at reset value.

Bits 15:0 **MACA3H:** MAC address3 high [47:32]

This field contains the upper 16 bits (47:32) of the 6-byte MAC address3.

Ethernet MAC address 3 low register (ETH_MACA3LR)

Address offset: 0x005C

Reset value: 0xFFFF FFFF

The MAC address 3 low register holds the lower 32 bits of the 6-byte second MAC address of the station.

31	30	29	28	27	26	25	24	23	22	21	20	19	18	17	16	15	14	13	12	11	10	9	8	7	6	5	4	3	2	1	0
MACA3L																															
rw	rw	rw	rw	rw	rw	rw	rw	rw	rw	rw	rw	rw	rw	rw	rw	rw	rw	rw	rw	rw	rw	rw	rw	rw	rw	rw	rw	rw	rw	rw	rw

Bits 31:0 **MACA3L:** MAC address3 low [31:0]

This field contains the lower 32 bits of the 6-byte second MAC address3. The content of this field is undefined until loaded by the application after the initialization process.

33.8.2 MMC register description

Ethernet MMC control register (ETH_MMCCR)

Address offset: 0x0100

Reset value: 0x0000 0000

The Ethernet MMC Control register establishes the operating mode of the management counters.

31	30	29	28	27	26	25	24	23	22	21	20	19	18	17	16	15	14	13	12	11	10	9	8	7	6	5	4	3	2	1	0
Reserved																										MCFHP	MCP	MCF	ROR	CSR	CR
																										rw	rw	rw	rw	rw	rw

Bits 31:6 Reserved, must be kept at reset value.

Bit 5 **MCFHP:** MMC counter Full-Half preset

When MCFHP is low and bit4 is set, all MMC counters get preset to almost-half value. All frame-counters get preset to 0x7FFF_FFF0 (half - 16)

When MCFHP is high and bit4 is set, all MMC counters get preset to almost-full value. All frame-counters get preset to 0xFFFF_FFF0 (full - 16)

Bit 4 **MCP:** MMC counter preset

When set, all counters will be initialized or preset to almost full or almost half as per Bit5 above. This bit will be cleared automatically after 1 clock cycle. This bit along with bit5 is useful for debugging and testing the assertion of interrupts due to MMC counter becoming half-full or full.

Bit 3 **MCF:** MMC counter freeze

When set, this bit freezes all the MMC counters to their current value. (None of the MMC counters are updated due to any transmitted or received frame until this bit is cleared to 0. If any MMC counter is read with the Reset on Read bit set, then that counter is also cleared in this mode.)

Bit 2 **ROR:** Reset on read

When this bit is set, the MMC counters is reset to zero after read (self-clearing after reset). The counters are cleared when the least significant byte lane (bits [7:0]) is read.

Bit 1 **CSR:** Counter stop rollover

When this bit is set, the counter does not roll over to zero after it reaches the maximum value.

Bit 0 **CR:** Counter reset

When it is set, all counters are reset. This bit is cleared automatically after 1 clock cycle.

Ethernet MMC receive interrupt register (ETH_MMCRIR)

Address offset: 0x0104

Reset value: 0x0000 0000

The Ethernet MMC receive interrupt register maintains the interrupts generated when receive statistic counters reach half their maximum values. (MSB of the counter is set.) It is a 32-bit wide register. An interrupt bit is cleared when the respective MMC counter that

caused the interrupt is read. The least significant byte lane (bits [7:0]) of the respective counter must be read in order to clear the interrupt bit.

31	30	29	28	27	26	25	24	23	22	21	20	19	18	17	16	15	14	13	12	11	10	9	8	7	6	5	4	3	2	1	0
Reserved														RGUFS	Reserved										RFAES	RFCES	Reserved				
														rc_r											rc_r	rc_r					

Bits 31:18 Reserved, must be kept at reset value.

Bit 17 **RGUFS:** Received Good Unicast Frames Status

This bit is set when the received, good unicast frames, counter reaches half the maximum value.

Bits 16:7 Reserved, must be kept at reset value.

Bit 6 **RFAES:** Received frames alignment error status

This bit is set when the received frames, with alignment error, counter reaches half the maximum value.

Bit 5 **RFCES:** Received frames CRC error status

This bit is set when the received frames, with CRC error, counter reaches half the maximum value.

Bits 4:0 Reserved, must be kept at reset value.

Ethernet MMC transmit interrupt register (ETH_MMCTIR)

Address offset: 0x0108

Reset value: 0x0000 0000

The Ethernet MMC transmit Interrupt register maintains the interrupts generated when transmit statistic counters reach half their maximum values. (MSB of the counter is set.) It is a 32-bit wide register. An interrupt bit is cleared when the respective MMC counter that caused the interrupt is read. The least significant byte lane (bits [7:0]) of the respective counter must be read in order to clear the interrupt bit.

31	30	29	28	27	26	25	24	23	22	21	20	19	18	17	16	15	14	13	12	11	10	9	8	7	6	5	4	3	2	1	0
Reserved										TGFS	Reserved					TGFMSCS	TGFSCS	Reserved													
										rc_r						rc_r	rc_r														

Bits 31:22 Reserved, must be kept at reset value.

Bit 21 **TGFS:** Transmitted good frames status

This bit is set when the transmitted, good frames, counter reaches half the maximum value.

Bits 20:16 Reserved, must be kept at reset value.

Bit 15 **TGFMSCS:** Transmitted good frames more single collision status

This bit is set when the transmitted, good frames after more than a single collision, counter reaches half the maximum value.

Bit 14 **TGFSCS:** Transmitted good frames single collision status

This bit is set when the transmitted, good frames after a single collision, counter reaches half the maximum value.

Bits 13:0 Reserved, must be kept at reset value.

Ethernet MMC receive interrupt mask register (ETH_MMCRIMR)

Address offset: 0x010C

Reset value: 0x0000 0000

The Ethernet MMC receive interrupt mask register maintains the masks for interrupts generated when the receive statistic counters reach half their maximum value. (MSB of the counter is set.) It is a 32-bit wide register.

31	30	29	28	27	26	25	24	23	22	21	20	19	18	17	16	15	14	13	12	11	10	9	8	7	6	5	4	3	2	1	0
Reserved														RGUFM	Reserved										RFAEM	RFCEM	Reserved				
														rw											rw	rw					

Bits 31:18 Reserved, must be kept at reset value.

Bit 17 **RGUFM:** Received good unicast frames mask

Setting this bit masks the interrupt when the received, good unicast frames, counter reaches half the maximum value.

Bits 16:7 Reserved, must be kept at reset value.

Bit 6 **RFAEM:** Received frames alignment error mask

Setting this bit masks the interrupt when the received frames, with alignment error, counter reaches half the maximum value.

Bit 5 **RFCEM:** Received frame CRC error mask

Setting this bit masks the interrupt when the received frames, with CRC error, counter reaches half the maximum value.

Bits 4:0 Reserved, must be kept at reset value.

Ethernet MMC transmit interrupt mask register (ETH_MMCTIMR)

Address offset: 0x0110

Reset value: 0x0000 0000

The Ethernet MMC transmit interrupt mask register maintains the masks for interrupts generated when the transmit statistic counters reach half their maximum value. (MSB of the counter is set). It is a 32-bit wide register.

31	30	29	28	27	26	25	24	23	22	21	20	19	18	17	16	15	14	13	12	11	10	9	8	7	6	5	4	3	2	1	0
Reserved										TGFM	Reserved					TGFMSCM	TGFSCM	Reserved													
										rw						rw	rw														

Bits 31:22 Reserved, must be kept at reset value.

Bit 21 **TGFM:** Transmitted good frames mask

Setting this bit masks the interrupt when the transmitted, good frames, counter reaches half the maximum value.

Bits 20:16 Reserved, must be kept at reset value.

Bit 15 **TGFMSCM:** Transmitted good frames more single collision mask

Setting this bit masks the interrupt when the transmitted good frames after more than a single collision counter reaches half the maximum value.

Bit 14 **TGFSCM:** Transmitted good frames single collision mask

Setting this bit masks the interrupt when the transmitted good frames after a single collision counter reaches half the maximum value.

Bits 13:0 Reserved, must be kept at reset value.

Ethernet MMC transmitted good frames after a single collision counter register (ETH_MMCTGFSCCR)

Address offset: 0x014C

Reset value: 0x0000 0000

This register contains the number of successfully transmitted frames after a single collision in Half-duplex mode.

31	30	29	28	27	26	25	24	23	22	21	20	19	18	17	16	15	14	13	12	11	10	9	8	7	6	5	4	3	2	1	0
TGFSCC																															
r	r	r	r	r	r	r	r	r	r	r	r	r	r	r	r	r	r	r	r	r	r	r	r	r	r	r	r	r	r	r	r

Bits 31:0 **TGFSCC:** Transmitted good frames single collision counter

Transmitted good frames after a single collision counter.

Ethernet MMC transmitted good frames after more than a single collision counter register (ETH_MMCTGFMSCCR)

Address offset: 0x0150

Reset value: 0x0000 0000

This register contains the number of successfully transmitted frames after more than a single collision in Half-duplex mode.

31	30	29	28	27	26	25	24	23	22	21	20	19	18	17	16	15	14	13	12	11	10	9	8	7	6	5	4	3	2	1	0
TGFMSCC																															
r	r	r	r	r	r	r	r	r	r	r	r	r	r	r	r	r	r	r	r	r	r	r	r	r	r	r	r	r	r	r	r

Bits 31:0 **TGFMSCC:** Transmitted good frames more single collision counter
Transmitted good frames after more than a single collision counter

Ethernet MMC transmitted good frames counter register (ETH_MMCTGFCR)

Address offset: 0x0168

Reset value: 0x0000 0000

This register contains the number of good frames transmitted.

31	30	29	28	27	26	25	24	23	22	21	20	19	18	17	16	15	14	13	12	11	10	9	8	7	6	5	4	3	2	1	0
TGFC																															
r	r	r	r	r	r	r	r	r	r	r	r	r	r	r	r	r	r	r	r	r	r	r	r	r	r	r	r	r	r	r	r

Bits 31:0 **TGFC:** Transmitted good frames counter

Ethernet MMC received frames with CRC error counter register (ETH_MMCRFCECR)

Address offset: 0x0194

Reset value: 0x0000 0000

This register contains the number of frames received with CRC error.

31	30	29	28	27	26	25	24	23	22	21	20	19	18	17	16	15	14	13	12	11	10	9	8	7	6	5	4	3	2	1	0
RFCEC																															
r	r	r	r	r	r	r	r	r	r	r	r	r	r	r	r	r	r	r	r	r	r	r	r	r	r	r	r	r	r	r	r

Bits 31:0 **RFCEC:** Received frames CRC error counter
Received frames with CRC error counter

Ethernet MMC received frames with alignment error counter register (ETH_MMCRFAECR)

Address offset: 0x0198

Reset value: 0x0000 0000

This register contains the number of frames received with alignment (dribble) error.

31	30	29	28	27	26	25	24	23	22	21	20	19	18	17	16	15	14	13	12	11	10	9	8	7	6	5	4	3	2	1	0
RFAEC																															
r	r	r	r	r	r	r	r	r	r	r	r	r	r	r	r	r	r	r	r	r	r	r	r	r	r	r	r	r	r	r	r

Bits 31:0 **RFAEC:** Received frames alignment error counter
Received frames with alignment error counter

MMC received good unicast frames counter register (ETH_MMCRGUFCR)

Address offset: 0x01C4

Reset value: 0x0000 0000

This register contains the number of good unicast frames received.

31	30	29	28	27	26	25	24	23	22	21	20	19	18	17	16	15	14	13	12	11	10	9	8	7	6	5	4	3	2	1	0
RGUFC																															
r	r	r	r	r	r	r	r	r	r	r	r	r	r	r	r	r	r	r	r	r	r	r	r	r	r	r	r	r	r	r	r

Bits 31:0 **RGUFC:** Received good unicast frames counter

33.8.3 IEEE 1588 time stamp registers

This section describes the registers required to support precision network clock synchronization functions under the IEEE 1588 standard.

Ethernet PTP time stamp control register (ETH_PTPTSCR)

Address offset: 0x0700

Reset value: 0x0000 00002000

This register controls the time stamp generation and update logic.

31	30	29	28	27	26	25	24	23	22	21	20	19	18	17	16	15	14	13	12	11	10	9	8	7	6	5	4	3	2	1	0
Reserved													TSPFFMAE	TSCNT		TSSMRME	TSSEME	TSSIPV4FE	TSSIPV6FE	TSSPTPOEFE	TSPTPPSV2E	TSSSR	TSSARFE	Reserved		TTSARU	TSITE	TSSTU	TSSTI	TSFCU	TSE
													rw	rw		rw	rw	rw	rw	rw	rw	rw	rw			rw	rw	rw	rw	rw	rw

Bits 31:19 Reserved, must be kept at reset value.

Bit 18 **TSPFFMAE:** Time stamp PTP frame filtering MAC address enable

When set, this bit uses the MAC address (except for MAC address 0) to filter the PTP frames when PTP is sent directly over Ethernet.

Bits 17:16 **TSCNT**: Time stamp clock node type

The following are the available types of clock node:
00: Ordinary clock
01: Boundary clock
10: End-to-end transparent clock
11: Peer-to-peer transparent clock

Bit 15 **TSSMRME**: Time stamp snapshot for message relevant to master enable

When this bit is set, the snapshot is taken for messages relevant to the master node only. When this bit is cleared the snapshot is taken for messages relevant to the slave node only. This is valid only for the ordinary clock and boundary clock nodes.

Bit 14 **TSSEME**: Time stamp snapshot for event message enable

When this bit is set, the time stamp snapshot is taken for event messages only (SYNC, Delay_Req, Pdelay_Req or Pdelay_Resp). When this bit is cleared the snapshot is taken for all other messages except for Announce, Management and Signaling.

Bit 13 **TSSIPV4FE**: Time stamp snapshot for IPv4 frames enable

When this bit is set, the time stamp snapshot is taken for IPv4 frames.

Bit 12 **TSSIPV6FE**: Time stamp snapshot for IPv6 frames enable

When this bit is set, the time stamp snapshot is taken for IPv6 frames.

Bit 11 **TSSPTPOEFE**: Time stamp snapshot for PTP over ethernet frames enable

When this bit is set, the time stamp snapshot is taken for frames which have PTP messages in Ethernet frames (PTP over Ethernet) also. By default snapshots are taken for UDP-IPEthernet PTP packets.

Bit 10 **TSPTPPSV2E**: Time stamp PTP packet snooping for version2 format enable

When this bit is set, the PTP packets are snooped using the version 2 format. When the bit is cleared, the PTP packets are snooped using the version 1 format.

Note: IEEE 1588 Version 1 and Version 2 formats as indicated in IEEE standard 1588-2008 (Revision of IEEE STD. 1588-2002).

Bit 9 **TSSSR**: Time stamp subsecond rollover: digital or binary rollover control

When this bit is set, the Time stamp low register rolls over when the subsecond counter reaches the value 0x3B9A C9FF (999 999 999 in decimal), and increments the Time Stamp (high) seconds.

When this bit is cleared, the rollover value of the subsecond register reaches 0x7FFF FFFF. The subsecond increment has to be programmed correctly depending on the PTP's reference clock frequency and this bit value.

Bit 8 **TSSARFE:** Time stamp snapshot for all received frames enable

When this bit is set, the time stamp snapshot is enabled for all frames received by the core.

Bits 7:6 Reserved, must be kept at reset value.

Bit 5 **TSARU:** Time stamp addend register update

When this bit is set, the Time stamp addend register's contents are updated to the PTP block for fine correction. This bit is cleared when the update is complete. This register bit must be read as zero before you can set it.

Bit 4 **TSITE:** Time stamp interrupt trigger enable

When this bit is set, a time stamp interrupt is generated when the system time becomes greater than the value written in the Target time register. When the Time stamp trigger interrupt is generated, this bit is cleared.

Bit 3 **TSSTU:** Time stamp system time update

When this bit is set, the system time is updated (added to or subtracted from) with the value specified in the Time stamp high update and Time stamp low update registers. Both the TSSTU and TSSTI bits must be read as zero before you can set this bit. Once the update is completed in hardware, this bit is cleared.

Bit 2 **TSSTI:** Time stamp system time initialize

When this bit is set, the system time is initialized (overwritten) with the value specified in the Time stamp high update and Time stamp low update registers. This bit must be read as zero before you can set it. When initialization is complete, this bit is cleared.

Bit 1 **TSFCU:** Time stamp fine or coarse update

When set, this bit indicates that the system time stamp is to be updated using the Fine Update method. When cleared, it indicates the system time stamp is to be updated using the Coarse method.

Bit 0 **TSE:** Time stamp enable

When this bit is set, time stamping is enabled for transmit and receive frames. When this bit is cleared, the time stamp function is suspended and time stamps are not added for transmit and receive frames. Because the maintained system time is suspended, you must always initialize the time stamp feature (system time) after setting this bit high.

The table below indicates the messages for which a snapshot is taken depending on the clock, enable master and enable snapshot for event message register settings.

Table 194. Time stamp snapshot dependency on registers bits

TSCNT (bits 17:16)	TSSMRME (bit 15)(1)	TSSEME (bit 14)	Messages for which snapshots are taken
00 or 01	X(2)	0	SYNC, Follow_Up, Delay_Req, Delay_Resp
00 or 01	1	1	Delay_Req
00 or 01	0	1	SYNC
10	N/A	0	SYNC, Follow_Up, Delay_Req, Delay_Resp
10	N/A	1	SYNC, Follow_Up
11	N/A	0	SYNC, Follow_Up, Delay_Req, Delay_Resp, Pdelay_Req, Pdelay_Resp
11	N/A	1	SYNC, Pdelay_Req, Pdelay_Resp

1. N/A = not applicable.
2. X = don’t care.

Ethernet PTP subsecond increment register (ETH_PTPSSIR)

Address offset: 0x0704

Reset value: 0x0000 0000

This register contains the 8-bit value by which the subsecond register is incremented. In Coarse update mode (TSFCU bit in ETH_PTPTSCR), the value in this register is added to the system time every clock cycle of HCLK. In Fine update mode, the value in this register is added to the system time whenever the accumulator gets an overflow.

31	30	29	28	27	26	25	24	23	22	21	20	19	18	17	16	15	14	13	12	11	10	9	8	7	6	5	4	3	2	1	0
Reserved																								STSSI							
																								rw	rw	rw	rw	rw	rw	rw	rw

Bits 31:8 Reserved, must be kept at reset value.

Bits 7:0 **STSSI:** System time subsecond increment

The value programmed in this register is added to the contents of the subsecond value of the system time in every update.

For example, to achieve 20 ns accuracy, the value is: 20 / 0.467 = ~ 43 (or 0x2A).

Ethernet PTP time stamp high register (ETH_PTPTSHR)

Address offset: 0x0708

Reset value: 0x0000 0000

This register contains the most significant (higher) 32 time bits. This read-only register contains the seconds system time value. The Time stamp high register, along with Time stamp low register, indicates the current value of the system time maintained by the MAC. Though it is updated on a continuous basis.

31	30	29	28	27	26	25	24	23	22	21	20	19	18	17	16	15	14	13	12	11	10	9	8	7	6	5	4	3	2	1	0
STS																															
r	r	r	r	r	r	r	r	r	r	r	r	r	r	r	r	r	r	r	r	r	r	r	r	r	r	r	r	r	r	r	r

Bits 31:0 **STS:** System time second

The value in this field indicates the current value in seconds of the System Time maintained by the core.

Ethernet PTP time stamp low register (ETH_PTPTSLR)

Address offset: 0x070C

Reset value: 0x0000 0000

This register contains the least significant (lower) 32 time bits. This read-only register contains the subsecond system time value.

31	30	29	28	27	26	25	24	23	22	21	20	19	18	17	16	15	14	13	12	11	10	9	8	7	6	5	4	3	2	1	0
STPNS	STSS																														
r	r	r	r	r	r	r	r	r	r	r	r	r	r	r	r	r	r	r	r	r	r	r	r	r	r	r	r	r	r	r	r

Bit 31 **STPNS:** System time positive or negative sign

This bit indicates a positive or negative time value. When set, the bit indicates that time representation is negative. When cleared, it indicates that time representation is positive. Because the system time should always be positive, this bit is normally zero.

Bits 30:0 **STSS:** System time subseconds

The value in this field has the subsecond time representation, with 0.46 ns accuracy.

Ethernet PTP time stamp high update register (ETH_PTPTSHUR)

Address offset: 0x0710

Reset value: 0x0000 0000

This register contains the most significant (higher) 32 bits of the time to be written to, added to, or subtracted from the System Time value. The Time stamp high update register, along with the Time stamp update low register, initializes or updates the system time maintained by the MAC. You have to write both of these registers before setting the TSSTI or TSSTU bits in the Time stamp control register.

31	30	29	28	27	26	25	24	23	22	21	20	19	18	17	16	15	14	13	12	11	10	9	8	7	6	5	4	3	2	1	0
TSUS																															
rw	rw	rw	rw	rw	rw	rw	rw	rw	rw	rw	rw	rw	rw	rw	rw	rw	rw	rw	rw	rw	rw	rw	rw	rw	rw	rw	rw	rw	rw	rw	rw

Bits 31:0 **TSUS:** Time stamp update second

The value in this field indicates the time, in seconds, to be initialized or added to the system time.

Ethernet PTP time stamp low update register (ETH_PTPTSLUR)

Address offset: 0x0714

Reset value: 0x0000 0000

This register contains the least significant (lower) 32 bits of the time to be written to, added to, or subtracted from the System Time value.

31	30	29	28	27	26	25	24	23	22	21	20	19	18	17	16	15	14	13	12	11	10	9	8	7	6	5	4	3	2	1	0
TSUPNS	TSUSS																														
rw	rw	rw	rw	rw	rw	rw	rw	rw	rw	rw	rw	rw	rw	rw	rw	rw	rw	rw	rw	rw	rw	rw	rw	rw	rw	rw	rw	rw	rw	rw	rw

Bit 31 **TSUPNS:** Time stamp update positive or negative sign

This bit indicates positive or negative time value. When set, the bit indicates that time representation is negative. When cleared, it indicates that time representation is positive. When TSSTI is set (system time initialization) this bit should be zero. If this bit is set when TSSTU is set, the value in the Time stamp update registers is subtracted from the system time. Otherwise it is added to the system time.

Bits 30:0 **TSUSS:** Time stamp update subseconds

The value in this field indicates the subsecond time to be initialized or added to the system time. This value has an accuracy of 0.46 ns (in other words, a value of 0x0000_0001 is 0.46 ns).

Ethernet PTP time stamp addend register (ETH_PTPTSAR)

Address offset: 0x0718

Reset value: 0x0000 0000

This register is used by the software to readjust the clock frequency linearly to match the master clock frequency. This register value is used only when the system time is configured for Fine update mode (TSFCU bit in ETH_PTPTSCR). This register content is added to a 32-bit accumulator in every clock cycle and the system time is updated whenever the accumulator overflows.

31	30	29	28	27	26	25	24	23	22	21	20	19	18	17	16	15	14	13	12	11	10	9	8	7	6	5	4	3	2	1	0
TSA																															
rw	rw	rw	rw	rw	rw	rw	rw	rw	rw	rw	rw	rw	rw	rw	rw	rw	rw	rw	rw	rw	rw	rw	rw	rw	rw	rw	rw	rw	rw	rw	rw

Bits 31:0 **TSA:** Time stamp addend

This register indicates the 32-bit time value to be added to the Accumulator register to achieve time synchronization.

Ethernet PTP target time high register (ETH_PTPTTHR)

Address offset: 0x071C

Reset value: 0x0000 0000

This register contains the higher 32 bits of time to be compared with the system time for interrupt event generation. The Target time high register, along with Target time low register, is used to schedule an interrupt event (TSARU bit in ETH_PTPTSCR) when the system time exceeds the value programmed in these registers.

31	30	29	28	27	26	25	24	23	22	21	20	19	18	17	16	15	14	13	12	11	10	9	8	7	6	5	4	3	2	1	0
TTSH																															
rw	rw	rw	rw	rw	rw	rw	rw	rw	rw	rw	rw	rw	rw	rw	rw	rw	rw	rw	rw	rw	rw	rw	rw	rw	rw	rw	rw	rw	rw	rw	rw

Bits 31:0 **TTSH:** Target time stamp high

This register stores the time in seconds. When the time stamp value matches or exceeds both Target time stamp registers, the MAC, if enabled, generates an interrupt.

Ethernet PTP target time low register (ETH_PTPTTLR)

Address offset: 0x0720

Reset value: 0x0000 0000

This register contains the lower 32 bits of time to be compared with the system time for interrupt event generation.

31	30	29	28	27	26	25	24	23	22	21	20	19	18	17	16	15	14	13	12	11	10	9	8	7	6	5	4	3	2	1	0
TTSL																															
rw	rw	rw	rw	rw	rw	rw	rw	rw	rw	rw	rw	rw	rw	rw	rw	rw	rw	rw	rw	rw	rw	rw	rw	rw	rw	rw	rw	rw	rw	rw	rw

Bits 31:0 **TTSL:** Target time stamp low

This register stores the time in (signed) nanoseconds. When the value of the time stamp matches or exceeds both Target time stamp registers, the MAC, if enabled, generates an interrupt.

Ethernet PTP time stamp status register (ETH_PTPTSSR)

Address offset: 0x0728

Reset value: 0x0000 0000

This register contains the time stamp status register.

31	30	29	28	27	26	25	24	23	22	21	20	19	18	17	16	15	14	13	12	11	10	9	8	7	6	5	4	3	2	1	0
Reserved																														TSTTR	TSSO
																														ro	ro

Bits 31:2 Reserved, must be kept at reset value.

Bit 1 **TSTTR**: Time stamp target time reached

When set, this bit indicates that the value of the system time is greater than or equal to the value specified in the Target time high and low registers. This bit is cleared when the ETH_PTPTSSR register is read.

Bit 0 **TSSO**: Time stamp second overflow

When set, this bit indicates that the second value of the time stamp has overflowed beyond 0xFFFF FFFF.

Ethernet PTP PPS control register (ETH_PTPPPSCR)

Address offset: 0x072C

Reset value: 0x0000 0000

This register controls the frequency of the PPS output.

31	30	29	28	27	26	25	24	23	22	21	20	19	18	17	16	15	14	13	12	11	10	9	8	7	6	5	4	3	2	1	0
Reserved																												PPSFREQ			
																														ro	ro

Bits 31:4 Reserved, must be kept at reset value.

Bits 3:0 **PPSFREQ**: PPS frequency selection

The PPS output frequency is set to $2^{PPSFREQ}$ Hz.

0000: 1 Hz with a pulse width of 125 ms for binary rollover and, of 100 ms for digital rollover
0001: 2 Hz with 50% duty cycle for binary rollover (digital rollover not recommended)
0010: 4 Hz with 50% duty cycle for binary rollover (digital rollover not recommended)
0011: 8 Hz with 50% duty cycle for binary rollover (digital rollover not recommended)
0100: 16 Hz with 50% duty cycle for binary rollover (digital rollover not recommended)
...
1111: 32768 Hz with 50% duty cycle for binary rollover (digital rollover not recommended)

Note: If digital rollover is used (TSSSR=1, bit 9 in ETH_PTPTSCR), it is recommended not to use the PPS output with a frequency other than 1 Hz. Otherwise, with digital rollover, the PPS output has irregular waveforms at higher frequencies (though its average frequency will always be correct during any one-second window).

33.8.4 DMA register description

This section defines the bits for each DMA register. Non-32 bit accesses are allowed as long as the address is word-aligned.

Ethernet DMA bus mode register (ETH_DMABMR)

Address offset: 0x1000

Reset value: 0x0002 0101

The bus mode register establishes the bus operating modes for the DMA.

31	30	29	28	27	26	25	24	23	22	21	20	19	18	17	16	15	14	13	12	11	10	9	8	7	6	5	4	3	2	1	0
Reserved					MB	AAB	FPM	USP	RDP						FB	PM		PBL						EDFE	DSL					DA	SR
					rw	rw	rw	rw	rw	rw	rw	rw	rw	rw	rw	rw	rw	rw	rw	rw	rw	rw	rw		rw	rw	rw	rw	rw	rw	rs

Bits 31:27 Reserved, must be kept at reset value.

Bit 26 **MB:** Mixed burst

When this bit is set high and the FB bit is low, the AHB master interface starts all bursts of a length greater than 16 with INCR (undefined burst). When this bit is cleared, it reverts to fixed burst transfers (INCRx and SINGLE) for burst lengths of 16 and below.

Bit 25 **AAB:** Address-aligned beats

When this bit is set high and the FB bit equals 1, the AHB interface generates all bursts aligned to the start address LS bits. If the FB bit equals 0, the first burst (accessing the data buffer's start address) is not aligned, but subsequent bursts are aligned to the address.

Bit 24 **FPM:** 4xPBL mode

When set high, this bit multiplies the PBL value programmed (bits [22:17] and bits [13:8]) four times. Thus the DMA transfers data in a maximum of 4, 8, 16, 32, 64 and 128 beats depending on the PBL value.

Bit 23 **USP:** Use separate PBL

When set high, it configures the RxDMA to use the value configured in bits [22:17] as PBL while the PBL value in bits [13:8] is applicable to TxDMA operations only. When this bit is cleared, the PBL value in bits [13:8] is applicable for both DMA engines.

Bits 22:17 **RDP:** Rx DMA PBL

These bits indicate the maximum number of beats to be transferred in one RxDMA transaction. This is the maximum value that is used in a single block read/write operation. The RxDMA always attempts to burst as specified in RDP each time it starts a burst transfer on the host bus. RDP can be programmed with permissible values of 1, 2, 4, 8, 16, and 32. Any other value results in undefined behavior.

These bits are valid and applicable only when USP is set high.

Bit 16 **FB:** Fixed burst

This bit controls whether the AHB Master interface performs fixed burst transfers or not. When set, the AHB uses only SINGLE, INCR4, INCR8 or INCR16 during start of normal burst transfers. When reset, the AHB uses SINGLE and INCR burst transfer operations.

Bits 15:14 **PM:** Rx Tx priority ratio

RxDMA requests are given priority over TxDMA requests in the following ratio:

00: 1:1
01: 2:1
10: 3:1
11: 4:1
This is valid only when the DA bit is cleared.

Bits 13:8 **PBL:** Programmable burst length

These bits indicate the maximum number of beats to be transferred in one DMA transaction. This is the maximum value that is used in a single block read/write operation. The DMA always attempts to burst as specified in PBL each time it starts a burst transfer on the host bus. PBL can be programmed with permissible values of 1, 2, 4, 8, 16, and 32. Any other value results in undefined behavior. When USP is set, this PBL value is applicable for TxDMA transactions only.

The PBL values have the following limitations:

– The maximum number of beats (PBL) possible is limited by the size of the Tx FIFO and Rx FIFO.
– The FIFO has a constraint that the maximum beat supported is half the depth of the FIFO.
– If the PBL is common for both transmit and receive DMA, the minimum Rx FIFO and Tx FIFO depths must be considered.
– Do not program out-of-range PBL values, because the system may not behave properly.

Bit 7 **EDFE:** Enhanced descriptor format enable

When this bit is set, the enhanced descriptor format is enabled and the descriptor size is increased to 32 bytes (8 words). This is required when time stamping is activated (TSE=1, ETH_PTPTSCR bit 0) or if IPv4 checksum offload is activated (IPCO=1, ETH_MACCR bit 10).

Bits 6:2 **DSL:** Descriptor skip length

This bit specifies the number of words to skip between two unchained descriptors. The address skipping starts from the end of current descriptor to the start of next descriptor. When DSL value equals zero, the descriptor table is taken as contiguous by the DMA, in Ring mode.

Bit 1 **DA:** DMA Arbitration

0: Round-robin with Rx:Tx priority given in bits [15:14]
1: Rx has priority over Tx

Bit 0 **SR:** Software reset

When this bit is set, the MAC DMA controller resets all MAC Subsystem internal registers and logic. It is cleared automatically after the reset operation has completed in all of the core clock domains. Read a 0 value in this bit before re-programming any register of the core.

Ethernet DMA transmit poll demand register (ETH_DMATPDR)

Address offset: 0x1004

Reset value: 0x0000 0000

This register is used by the application to instruct the DMA to poll the transmit descriptor list. The transmit poll demand register enables the Transmit DMA to check whether or not the current descriptor is owned by DMA. The Transmit Poll Demand command is given to wake up the TxDMA if it is in Suspend mode. The TxDMA can go into Suspend mode due to an underflow error in a transmitted frame or due to the unavailability of descriptors owned by

transmit DMA. You can issue this command anytime and the TxDMA resets it once it starts re-fetching the current descriptor from host memory.

31	30	29	28	27	26	25	24	23	22	21	20	19	18	17	16	15	14	13	12	11	10	9	8	7	6	5	4	3	2	1	0
TPD																															
rw_wt																															

Bits 31:0 TPD: Transmit poll demand

When these bits are written with any value, the DMA reads the current descriptor pointed to by the ETH_DMACHTDR register. If that descriptor is not available (owned by Host), transmission returns to the Suspend state and ETH_DMASR register bit 2 is asserted. If the descriptor is available, transmission resumes.

EHERNET DMA receive poll demand register (ETH_DMARPDR)

Address offset: 0x1008

Reset value: 0x0000 0000

This register is used by the application to instruct the DMA to poll the receive descriptor list. The Receive poll demand register enables the receive DMA to check for new descriptors. This command is given to wake up the RxDMA from Suspend state. The RxDMA can go into Suspend state only due to the unavailability of descriptors owned by it.

31	30	29	28	27	26	25	24	23	22	21	20	19	18	17	16	15	14	13	12	11	10	9	8	7	6	5	4	3	2	1	0
RPD																															
rw_wt																															

Bits 31:0 **RPD:** Receive poll demand

When these bits are written with any value, the DMA reads the current descriptor pointed to by the ETH_DMACHRDR register. If that descriptor is not available (owned by Host), reception returns to the Suspended state and ETH_DMASR register bit 7 is not asserted. If the descriptor is available, the Receive DMA returns to active state.

Ethernet DMA receive descriptor list address register (ETH_DMARDLAR)

Address offset: 0x100C

Reset value: 0x0000 0000

The Receive descriptor list address register points to the start of the receive descriptor list. The descriptor lists reside in the STM32F4xx's physical memory space and must be word-aligned. The DMA internally converts it to bus-width aligned address by making the corresponding LS bits low. Writing to the ETH_DMARDLAR register is permitted only when reception is stopped. When stopped, the ETH_DMARDLAR register must be written to before the receive Start command is given.

31	30	29	28	27	26	25	24	23	22	21	20	19	18	17	16	15	14	13	12	11	10	9	8	7	6	5	4	3	2	1	0
SRL																															
rw	rw	rw	rw	rw	rw	rw	rw	rw	rw	rw	rw	rw	rw	rw	rw	rw	rw	rw	rw	rw	rw	rw	rw	rw	rw	rw	rw	rw	rw	rw	rw

Bits 31:0 **SRL:** Start of receive list

This field contains the base address of the first descriptor in the receive descriptor list. The LSB bits [1/2/3:0] for 32/64/128-bit bus width) are internally ignored and taken as all-zero by the DMA. Hence these LSB bits are read only.

Ethernet DMA transmit descriptor list address register (ETH_DMATDLAR)

Address offset: 0x1010

Reset value: 0x0000 0000

The Transmit descriptor list address register points to the start of the transmit descriptor list. The descriptor lists reside in the STM32F4xx's physical memory space and must be word-aligned. The DMA internally converts it to bus-width-aligned address by taking the corresponding LSB to low. Writing to the ETH_DMATDLAR register is permitted only when transmission has stopped. Once transmission has stopped, the ETH_DMATDLAR register can be written before the transmission Start command is given.

31	30	29	28	27	26	25	24	23	22	21	20	19	18	17	16	15	14	13	12	11	10	9	8	7	6	5	4	3	2	1	0
STL																															
rw	rw	rw	rw	rw	rw	rw	rw	rw	rw	rw	rw	rw	rw	rw	rw	rw	rw	rw	rw	rw	rw	rw	rw	rw	rw	rw	rw	rw	rw	rw	rw

Bits 31:0 **STL:** Start of transmit list

This field contains the base address of the first descriptor in the transmit descriptor list. The LSB bits [1/2/3:0] for 32/64/128-bit bus width) are internally ignored and taken as all-zero by the DMA. Hence these LSB bits are read-only.

Ethernet DMA status register (ETH_DMASR)

Address offset: 0x1014

Reset value: 0x0000 0000

The Status register contains all the status bits that the DMA reports to the application. The ETH_DMASR register is usually read by the software driver during an interrupt service routine or polling. Most of the fields in this register cause the host to be interrupted. The ETH_DMASR register bits are not cleared when read. Writing 1 to (unreserved) bits in ETH_DMASR register[16:0] clears them and writing 0 has no effect. Each field (bits [16:0]) can be masked by masking the appropriate bit in the ETH_DMAIER register.

31	30	29	28	27	26	25	24	23	22	21	20	19	18	17	16	15	14	13	12	11	10	9	8	7	6	5	4	3	2	1	0
Reserved		TSTS	PMTS	MMCS	Reserved	EBS			TPS			RPS			NIS	AIS	ERS	FBES	Reserved		ETS	RWTS	RPSS	RBUS	RS	TUS	ROS	TJTS	TBUS	TPSS	TS
		r	r	r		r	r	r	r	r	r	r	r	r	rc-w1	rc-w1	rc-w1	rc-w1			rc-w1	rc-w1	rc-w1	rc-w1	rc-w1	rc-w1	rc-w1	rc-w1	rc-w1	rc-w1	rc-w1

Bits 31:30 Reserved, must be kept at reset value.

Bit 29 **TSTS:** Time stamp trigger status

This bit indicates an interrupt event in the MAC core's Time stamp generator block. The software must read the MAC core's status register, clearing its source (bit 9), to reset this bit to 0. When this bit is high an interrupt is generated if enabled.

Bit 28 **PMTS:** PMT status

This bit indicates an event in the MAC core's PMT. The software must read the corresponding registers in the MAC core to get the exact cause of interrupt and clear its source to reset this bit to 0. The interrupt is generated when this bit is high if enabled.

Bit 27 **MMCS:** MMC status

This bit reflects an event in the MMC of the MAC core. The software must read the corresponding registers in the MAC core to get the exact cause of interrupt and clear the source of interrupt to make this bit as 0. The interrupt is generated when this bit is high if enabled.

Bit 26 Reserved, must be kept at reset value.

Bits 25:23 **EBS:** Error bits status

These bits indicate the type of error that caused a bus error (error response on the AHB interface). Valid only with the fatal bus error bit (ETH_DMASR register [13]) set. This field does not generate an interrupt.

Bit 231 Error during data transfer by TxDMA

0 Error during data transfer by RxDMA

Bit 24 1 Error during read transfer

0 Error during write transfer

Bit 25 1 Error during descriptor access

0 Error during data buffer access

Bits 22:20 **TPS:** Transmit process state

These bits indicate the Transmit DMA FSM state. This field does not generate an interrupt.

000: Stopped; Reset or Stop Transmit Command issued

001: Running; Fetching transmit transfer descriptor

010: Running; Waiting for status

011: Running; Reading Data from host memory buffer and queuing it to transmit buffer (Tx FIFO)

100, 101: Reserved for future use

110: Suspended; Transmit descriptor unavailable or transmit buffer underflow

111: Running; Closing transmit descriptor

Bits 19:17 **RPS:** Receive process state

These bits indicate the Receive DMA FSM state. This field does not generate an interrupt.

000: Stopped: Reset or Stop Receive Command issued

001: Running: Fetching receive transfer descriptor

010: Reserved for future use

011: Running: Waiting for receive packet

100: Suspended: Receive descriptor unavailable

101: Running: Closing receive descriptor

110: Reserved for future use

111: Running: Transferring the receive packet data from receive buffer to host memory

Bit 16 **NIS:** Normal interrupt summary

The normal interrupt summary bit value is the logical OR of the following when the corresponding interrupt bits are enabled in the ETH_DMAIER register:

– ETH_DMASR [0]: Transmit interrupt
– ETH_DMASR [2]: Transmit buffer unavailable
– ETH_DMASR [6]: Receive interrupt
– ETH_DMASR [14]: Early receive interrupt

Only unmasked bits affect the normal interrupt summary bit.

This is a sticky bit and it must be cleared (by writing a 1 to this bit) each time a corresponding bit that causes NIS to be set is cleared.

Bit 15 **AIS:** Abnormal interrupt summary

The abnormal interrupt summary bit value is the logical OR of the following when the corresponding interrupt bits are enabled in the ETH_DMAIER register:

– ETH_DMASR [1]:Transmit process stopped
– ETH_DMASR [3]:Transmit jabber timeout
– ETH_DMASR [4]: Receive FIFO overflow
– ETH_DMASR [5]: Transmit underflow
– ETH_DMASR [7]: Receive buffer unavailable
– ETH_DMASR [8]: Receive process stopped
– ETH_DMASR [9]: Receive watchdog timeout
– ETH_DMASR [10]: Early transmit interrupt
– ETH_DMASR [13]: Fatal bus error

Only unmasked bits affect the abnormal interrupt summary bit.

This is a sticky bit and it must be cleared each time a corresponding bit that causes AIS to be set is cleared.

Bit 14 **ERS:** Early receive status

This bit indicates that the DMA had filled the first data buffer of the packet. Receive Interrupt ETH_DMASR [6] automatically clears this bit.

Bit 13 **FBES:** Fatal bus error status

This bit indicates that a bus error occurred, as detailed in [25:23]. When this bit is set, the corresponding DMA engine disables all its bus accesses.

Bits 12:11 Reserved, must be kept at reset value.

Bit 10 **ETS:** Early transmit status

This bit indicates that the frame to be transmitted was fully transferred to the Transmit FIFO.

Bit 9 **RWTS:** Receive watchdog timeout status

This bit is asserted when a frame with a length greater than 2 048 bytes is received.

Bit 8 **RPSS:** Receive process stopped status

This bit is asserted when the receive process enters the Stopped state.

Bit 7 **RBUS:** Receive buffer unavailable status

This bit indicates that the next descriptor in the receive list is owned by the host and cannot be acquired by the DMA. Receive process is suspended. To resume processing receive descriptors, the host should change the ownership of the descriptor and issue a Receive Poll Demand command. If no Receive Poll Demand is issued, receive process resumes when the next recognized incoming frame is received. ETH_DMASR [7] is set only when the previous receive descriptor was owned by the DMA.

Bit 6 **RS:** Receive status

This bit indicates the completion of the frame reception. Specific frame status information has been posted in the descriptor. Reception remains in the Running state.

Bit 5 **TUS:** Transmit underflow status

This bit indicates that the transmit buffer had an underflow during frame transmission. Transmission is suspended and an underflow error TDES0[1] is set.

Bit 4 **ROS:** Receive overflow status

This bit indicates that the receive buffer had an overflow during frame reception. If the partial frame is transferred to the application, the overflow status is set in RDES0[11].

Bit 3 **TJTS:** Transmit jabber timeout status

This bit indicates that the transmit jabber timer expired, meaning that the transmitter had been excessively active. The transmission process is aborted and placed in the Stopped state. This causes the transmit jabber timeout TDES0[14] flag to be asserted.

Bit 2 **TBUS:** Transmit buffer unavailable status

This bit indicates that the next descriptor in the transmit list is owned by the host and cannot be acquired by the DMA. Transmission is suspended. Bits [22:20] explain the transmit process state transitions. To resume processing transmit descriptors, the host should change the ownership of the bit of the descriptor and then issue a Transmit Poll Demand command.

Bit 1 **TPSS:** Transmit process stopped status

This bit is set when the transmission is stopped.

Bit 0 **TS:** Transmit status

This bit indicates that frame transmission is finished and TDES1[31] is set in the first descriptor.

Ethernet DMA operation mode register (ETH_DMAOMR)

Address offset: 0x1018

Reset value: 0x0000 0000

The operation mode register establishes the Transmit and Receive operating modes and commands. The ETH_DMAOMR register should be the last CSR to be written as part of DMA initialization.

31	30	29	28	27	26	25	24	23	22	21	20	19	18	17	16	15	14	13	12	11	10	9	8	7	6	5	4	3	2	1	0
Reserved					DTCEFD	RSF	DFRF	Reserved		TSF	FTF	Reserved			TTC			ST	Reserved					FEF	FUGF	Reserved	RTC		OSF	SR	Reserved
					rw	rw	rw			rw	rs				rw	rw	rw	rw						rw	rw		rw	rw	rw	rw	

Bits 31:27 Reserved, must be kept at reset value.

Bit 26 **DTCEFD:** Dropping of TCP/IP checksum error frames disable

When this bit is set, the core does not drop frames that only have errors detected by the receive checksum offload engine. Such frames do not have any errors (including FCS error) in the Ethernet frame received by the MAC but have errors in the encapsulated payload only. When this bit is cleared, all error frames are dropped if the FEF bit is reset.

Bit 25 **RSF:** Receive store and forward

When this bit is set, a frame is read from the Rx FIFO after the complete frame has been written to it, ignoring RTC bits. When this bit is cleared, the Rx FIFO operates in Cut-through mode, subject to the threshold specified by the RTC bits.

Bit 24 **DFRF:** Disable flushing of received frames

When this bit is set, the RxDMA does not flush any frames due to the unavailability of receive descriptors/buffers as it does normally when this bit is cleared (see *Receive process suspended*).

Bits 23:22 Reserved, must be kept at reset value.

Bit 21 **TSF:** Transmit store and forward

When this bit is set, transmission starts when a full frame resides in the Transmit FIFO. When this bit is set, the TTC values specified by the ETH_DMAOMR register bits [16:14] are ignored.

When this bit is cleared, the TTC values specified by the ETH_DMAOMR register bits [16:14] are taken into account.

This bit should be changed only when transmission is stopped.

Bit 20 **FTF:** Flush transmit FIFO

When this bit is set, the transmit FIFO controller logic is reset to its default values and thus all data in the Tx FIFO are lost/flushed. This bit is cleared internally when the flushing operation is complete. The Operation mode register should not be written to until this bit is cleared.

Bits 19:17 Reserved, must be kept at reset value.

Bits 16:14 **TTC:** Transmit threshold control

These three bits control the threshold level of the Transmit FIFO. Transmission starts when the frame size within the Transmit FIFO is larger than the threshold. In addition, full frames with a length less than the threshold are also transmitted. These bits are used only when the TSF bit (Bit 21) is cleared.

000: 64
001: 128
010: 192
011: 256
100: 40
101: 32
110: 24
111: 16

Bit 13 **ST:** Start/stop transmission

When this bit is set, transmission is placed in the Running state, and the DMA checks the transmit list at the current position for a frame to be transmitted. Descriptor acquisition is attempted either from the current position in the list, which is the transmit list base address set by the ETH_DMATDLAR register, or from the position retained when transmission was stopped previously. If the current descriptor is not owned by the DMA, transmission enters the Suspended state and the transmit buffer unavailable bit (ETH_DMASR [2]) is set. The Start Transmission command is effective only when transmission is stopped. If the command is issued before setting the DMA ETH_DMATDLAR register, the DMA behavior is unpredictable.

When this bit is cleared, the transmission process is placed in the Stopped state after completing the transmission of the current frame. The next descriptor position in the transmit list is saved, and becomes the current position when transmission is restarted. The Stop Transmission command is effective only when the transmission of the current frame is complete or when the transmission is in the Suspended state.

Bits 12:8 Reserved, must be kept at reset value.

Bit 7 **FEF:** Forward error frames

When this bit is set, all frames except runt error frames are forwarded to the DMA.

When this bit is cleared, the Rx FIFO drops frames with error status (CRC error, collision error, giant frame, watchdog timeout, overflow). However, if the frame's start byte (write) pointer is already transferred to the read controller side (in Threshold mode), then the frames are not dropped. The Rx FIFO drops the error frames if that frame's start byte is not transferred (output) on the ARI bus.

Bit 6 **FUGF:** Forward undersized good frames

When this bit is set, the Rx FIFO forwards undersized frames (frames with no error and length less than 64 bytes) including pad-bytes and CRC).

When this bit is cleared, the Rx FIFO drops all frames of less than 64 bytes, unless such a frame has already been transferred due to lower value of receive threshold (e.g., RTC = 01).

Bit 5 Reserved, must be kept at reset value.

Bits 4:3 **RTC:** Receive threshold control

These two bits control the threshold level of the Receive FIFO. Transfer (request) to DMA starts when the frame size within the Receive FIFO is larger than the threshold. In addition, full frames with a length less than the threshold are transferred automatically.

Note: Note that value of 11 is not applicable if the configured Receive FIFO size is 128 bytes.

Note: These bits are valid only when the RSF bit is zero, and are ignored when the RSF bit is set to 1.

00: 64
01: 32
10: 96
11: 128

Bit 2 **OSF:** Operate on second frame

When this bit is set, this bit instructs the DMA to process a second frame of Transmit data even before status for first frame is obtained.

Bit 1 **SR:** Start/stop receive

When this bit is set, the receive process is placed in the Running state. The DMA attempts to acquire the descriptor from the receive list and processes incoming frames. Descriptor acquisition is attempted from the current position in the list, which is the address set by the DMA ETH_DMARDLAR register or the position retained when the receive process was previously stopped. If no descriptor is owned by the DMA, reception is suspended and the receive buffer unavailable bit (ETH_DMASR [7]) is set. The Start Receive command is effective only when reception has stopped. If the command was issued before setting the DMA ETH_DMARDLAR register, the DMA behavior is unpredictable.

When this bit is cleared, RxDMA operation is stopped after the transfer of the current frame. The next descriptor position in the receive list is saved and becomes the current position when the receive process is restarted. The Stop Receive command is effective only when the Receive process is in either the Running (waiting for receive packet) or the Suspended state.

Bit 0 Reserved, must be kept at reset value.

Ethernet DMA interrupt enable register (ETH_DMAIER)

Address offset: 0x101C

Reset value: 0x0000 0000

The Interrupt enable register enables the interrupts reported by ETH_DMASR. Setting a bit to 1 enables a corresponding interrupt. After a hardware or software reset, all interrupts are disabled.

31	30	29	28	27	26	25	24	23	22	21	20	19	18	17	16	15	14	13	12	11	10	9	8	7	6	5	4	3	2	1	0
Reserved															NISE	AISE	ERIE	FBEIE	Reserved		ETIE	RWTIE	RPSIE	RBUIE	RIE	TUIE	ROIE	TJTIE	TBUIE	TPSIE	TIE
															rw	rw	rw	rw			rw	rw	rw	rw	rw	rw	rw	rw	rw	rw	rw

Bits 31:17 Reserved, must be kept at reset value.

Bit 16 **NISE:** Normal interrupt summary enable

When this bit is set, a normal interrupt is enabled. When this bit is cleared, a normal interrupt is disabled. This bit enables the following bits:

- ETH_DMASR [0]: Transmit Interrupt
- ETH_DMASR [2]: Transmit buffer unavailable
- ETH_DMASR [6]: Receive interrupt
- ETH_DMASR [14]: Early receive interrupt

Bit 15 **AISE:** Abnormal interrupt summary enable

When this bit is set, an abnormal interrupt is enabled. When this bit is cleared, an abnormal interrupt is disabled. This bit enables the following bits:

- ETH_DMASR [1]: Transmit process stopped
- ETH_DMASR [3]: Transmit jabber timeout
- ETH_DMASR [4]: Receive overflow
- ETH_DMASR [5]: Transmit underflow
- ETH_DMASR [7]: Receive buffer unavailable
- ETH_DMASR [8]: Receive process stopped
- ETH_DMASR [9]: Receive watchdog timeout
- ETH_DMASR [10]: Early transmit interrupt
- ETH_DMASR [13]: Fatal bus error

Bit 14 **ERIE:** Early receive interrupt enable

When this bit is set with the normal interrupt summary enable bit (ETH_DMAIER register[16]), the early receive interrupt is enabled.

When this bit is cleared, the early receive interrupt is disabled.

Bit 13 **FBEIE:** Fatal bus error interrupt enable

When this bit is set with the abnormal interrupt summary enable bit (ETH_DMAIER register[15]), the fatal bus error interrupt is enabled.

When this bit is cleared, the fatal bus error enable interrupt is disabled.

Bits 12:11 Reserved, must be kept at reset value.

Bit 10 **ETIE:** Early transmit interrupt enable

When this bit is set with the abnormal interrupt summary enable bit (ETH_DMAIER register [15]), the early transmit interrupt is enabled.

When this bit is cleared, the early transmit interrupt is disabled.

Bit 9 **RWTIE:** receive watchdog timeout interrupt enable

When this bit is set with the abnormal interrupt summary enable bit (ETH_DMAIER register[15]), the receive watchdog timeout interrupt is enabled.
When this bit is cleared, the receive watchdog timeout interrupt is disabled.

Bit 8 **RPSIE:** Receive process stopped interrupt enable

When this bit is set with the abnormal interrupt summary enable bit (ETH_DMAIER register[15]), the receive stopped interrupt is enabled. When this bit is cleared, the receive stopped interrupt is disabled.

Bit 7 **RBUIE:** Receive buffer unavailable interrupt enable

When this bit is set with the abnormal interrupt summary enable bit (ETH_DMAIER register[15]), the receive buffer unavailable interrupt is enabled.
When this bit is cleared, the receive buffer unavailable interrupt is disabled.

Bit 6 **RIE:** Receive interrupt enable

When this bit is set with the normal interrupt summary enable bit (ETH_DMAIER register[16]), the receive interrupt is enabled.
When this bit is cleared, the receive interrupt is disabled.

Bit 5 **TUIE:** Underflow interrupt enable

When this bit is set with the abnormal interrupt summary enable bit (ETH_DMAIER register[15]), the transmit underflow interrupt is enabled.
When this bit is cleared, the underflow interrupt is disabled.

Bit 4 **ROIE:** Overflow interrupt enable

When this bit is set with the abnormal interrupt summary enable bit (ETH_DMAIER register[15]), the receive overflow interrupt is enabled.
When this bit is cleared, the overflow interrupt is disabled.

Bit 3 **TJTIE:** Transmit jabber timeout interrupt enable

When this bit is set with the abnormal interrupt summary enable bit (ETH_DMAIER register[15]), the transmit jabber timeout interrupt is enabled.
When this bit is cleared, the transmit jabber timeout interrupt is disabled.

Bit 2 **TBUIE:** Transmit buffer unavailable interrupt enable

When this bit is set with the normal interrupt summary enable bit (ETH_DMAIER register[16]), the transmit buffer unavailable interrupt is enabled.
When this bit is cleared, the transmit buffer unavailable interrupt is disabled.

Bit 1 **TPSIE:** Transmit process stopped interrupt enable

When this bit is set with the abnormal interrupt summary enable bit (ETH_DMAIER register[15]), the transmission stopped interrupt is enabled.
When this bit is cleared, the transmission stopped interrupt is disabled.

Bit 0 **TIE:** Transmit interrupt enable

When this bit is set with the normal interrupt summary enable bit (ETH_DMAIER register[16]), the transmit interrupt is enabled.
When this bit is cleared, the transmit interrupt is disabled.

The Ethernet interrupt is generated only when the TSTS or PMTS bits of the DMA Status register is asserted with their corresponding interrupt are unmasked, or when the NIS/AIS Status bit is asserted and the corresponding Interrupt Enable bits (NISE/AISE) are enabled.

Ethernet DMA missed frame and buffer overflow counter register (ETH_DMAMFBOCR)

Address offset: 0x1020

Reset value: 0x0000 0000

The DMA maintains two counters to track the number of missed frames during reception. This register reports the current value of the counter. The counter is used for diagnostic purposes. Bits [15:0] indicate missed frames due to the STM32F4xx buffer being unavailable (no receive descriptor was available). Bits [27:17] indicate missed frames due to Rx FIFO overflow conditions and runt frames (good frames of less than 64 bytes).

31	30	29	28	27	26	25	24	23	22	21	20	19	18	17	16	15	14	13	12	11	10	9	8	7	6	5	4	3	2	1	0
Reserved			OFOC	MFA											OMFC	MFC															
			rc_r	rc_r	rc_r	rc_r	rc_r	rc_r	rc_r	rc_r	rc_r	rc_r	rc_r	rc_r	rc_r	rc_r	rc_r	rc_r	rc_r	rc_r	rc_r	rc_r	rc_r	rc_r	rc_r	rc_r	rc_r	rc_r	rc_r	rc_r	rc_r

Bits 31:29 Reserved, must be kept at reset value.

Bit 28 **OFOC:** Overflow bit for FIFO overflow counter

Bits 27:17 **MFA:** Missed frames by the application

Indicates the number of frames missed by the application

Bit 16 **OMFC:** Overflow bit for missed frame counter

Bits 15:0 **MFC:** Missed frames by the controller

Indicates the number of frames missed by the Controller due to the host receive buffer being unavailable. This counter is incremented each time the DMA discards an incoming frame.

Ethernet DMA receive status watchdog timer register (ETH_DMARSWTR)

Address offset: 0x1024

Reset value: 0x0000 0000

This register, when written with a non-zero value, enables the watchdog timer for the receive status (RS, ETH_DMASR[6]).

31	30	29	28	27	26	25	24	23	22	21	20	19	18	17	16	15	14	13	12	11	10	9	8	7	6	5	4	3	2	1	0
Reserved																								RSWTC							
																								rw	rw	rw	rw	rw	rw	rw	rw

Bits 31:8 Reserved, must be kept at reset value.

Bits 7:0 **RSWTC:** Receive status (RS) watchdog timer count

Indicates the number of HCLK clock cycles multiplied by 256 for which the watchdog timer is set. The watchdog timer gets triggered with the programmed value after the RxDMA completes the transfer of a frame for which the RS status bit is not set due to the setting of RDES1[31] in the corresponding descriptor. When the watchdog timer runs out, the RS bit is set and the timer is stopped. The watchdog timer is reset when the RS bit is set high due to automatic setting of RS as per RDES1[31] of any received frame.

Ethernet DMA current host transmit descriptor register (ETH_DMACHTDR)

Address offset: 0x1048

Reset value: 0x0000 0000

The Current host transmit descriptor register points to the start address of the current transmit descriptor read by the DMA.

31	30	29	28	27	26	25	24	23	22	21	20	19	18	17	16	15	14	13	12	11	10	9	8	7	6	5	4	3	2	1	0
HTDAP																															
r	r	r	r	r	r	r	r	r	r	r	r	r	r	r	r	r	r	r	r	r	r	r	r	r	r	r	r	r	r	r	r

Bits 31:0 **HTDAP:** Host transmit descriptor address pointer
Cleared . Pointer updated by DMA during operation.

Ethernet DMA current host receive descriptor register (ETH_DMACHRDR)

Address offset: 0x104C

Reset value: 0x0000 0000

The Current host receive descriptor register points to the start address of the current receive descriptor read by the DMA.

31	30	29	28	27	26	25	24	23	22	21	20	19	18	17	16	15	14	13	12	11	10	9	8	7	6	5	4	3	2	1	0
HRDAP																															
r	r	r	r	r	r	r	r	r	r	r	r	r	r	r	r	r	r	r	r	r	r	r	r	r	r	r	r	r	r	r	r

Bits 31:0 **HRDAP:** Host receive descriptor address pointer
Cleared On Reset. Pointer updated by DMA during operation.

Ethernet DMA current host transmit buffer address register (ETH_DMACHTBAR)

Address offset: 0x1050

Reset value: 0x0000 0000

The Current host transmit buffer address register points to the current transmit buffer address being read by the DMA.

31	30	29	28	27	26	25	24	23	22	21	20	19	18	17	16	15	14	13	12	11	10	9	8	7	6	5	4	3	2	1	0
HTBAP																															
r	r	r	r	r	r	r	r	r	r	r	r	r	r	r	r	r	r	r	r	r	r	r	r	r	r	r	r	r	r	r	r

Bits 31:0 **HTBAP:** Host transmit buffer address pointer
Cleared On Reset. Pointer updated by DMA during operation.

Ethernet DMA current host receive buffer address register (ETH_DMACHRBAR)

Address offset: 0x1054

Reset value: 0x0000 0000

The current host receive buffer address register points to the current receive buffer address being read by the DMA.

31	30	29	28	27	26	25	24	23	22	21	20	19	18	17	16	15	14	13	12	11	10	9	8	7	6	5	4	3	2	1	0
HRBAP																															
r	r	r	r	r	r	r	r	r	r	r	r	r	r	r	r	r	r	r	r	r	r	r	r	r	r	r	r	r	r	r	r

Bits 31:0 **HRBAP:** Host receive buffer address pointer
Cleared On Reset. Pointer updated by DMA during operation.

33.8.5 Ethernet register maps

Table 195 gives the ETH register map and reset values.

Table 195. Ethernet register map and reset values

Offset	Register	31	30	29	28	27	26	25	24	23	22	21	20	19	18	17	16	15	14	13	12	11	10	9	8	7	6	5	4	3	2	1	0
0x00	ETH_MACCR	Reserved						CSTF	eserved	WD	JD	Reserved		IFG			CSD	Reserved	FES	ROD	LM	DM	IPCO	RD	Reserved	APCS	BL		DC	TE	RE	Reserved	
	Reset value							0		0	0			0	0	0	0		0	0	0	0	0	0		0	0	0	0	0	0		
0x04	ETH_MACFFR	RA	Reserved																				HPF	SAF	SAIF	PCF		BFD	PAM	DAIF	HM	HU	PM
	Reset value	0																					0	0	0	0	0	0	0	0	0	0	0
0x08	ETH_MACHTHR	HTH[31:0]																															
	Reset value	0	0	0	0	0	0	0	0	0	0	0	0	0	0	0	0	0	0	0	0	0	0	0	0	0	0	0	0	0	0	0	0
0x0C	ETH_MACHTLR	HTL[31:0]																															
	Reset value	0	0	0	0	0	0	0	0	0	0	0	0	0	0	0	0	0	0	0	0	0	0	0	0	0	0	0	0	0	0	0	0
0x10	ETH_MACMIIAR	Reserved																PA					MR					CR				MW	MB
	Reset value																	0	0	0	0	0	0	0	0	0	0	0	0	0	0	0	0
0x14	ETH_MACMIIDR	Reserved																MD															
	Reset value																	0	0	0	0	0	0	0	0	0	0	0	0	0	0	0	0
0x18	ETH_MACFCR	PT																Reserved								ZQPD	Reserved	PLT		UPFD	RFCE	TFCE	FCB/BPA
	Reset value	0	0	0	0	0	0	0	0	0	0	0	0	0	0	0	0									0		0	0	0	0	0	0
0x1C	ETH_ MACVLANTR	Reserved															VLANTC	VLANTI															
	Reset value																0	0	0	0	0	0	0	0	0	0	0	0	0	0	0	0	0
0x28	ETH_ MACRWUFFR	Frame filter reg0\Frame filter reg1\Frame filter reg2\Frame filter reg3\Frame filter reg4\...\Frame filter reg7																															
	Reset value	0																															

Table 195. Ethernet register map and reset values (continued)

Offset	Register	31	30	29	28	27	26	25	24	23	22	21	20	19	18	17	16	15	14	13	12	11	10	9	8	7	6	5	4	3	2	1	0
0x2C	ETH_ MACPMTCSR	WFFRPR	Reserved																					GU	Reserved		WFR	MPR	Reserved		WFE	MPE	PD
	Reset value	0																						0			0	0			0	0	0
0x34	ETH_ MACDBGR	Reserved						TFF	TFNEGU	Reserved	TFWA	TFRS		MTP	MTFCS		MMTEA	Reserved						RFFL		Reserved	RFRCS		RFWRA	Reserved	MSFRWCS		MMRPEA
	Reset value							0	0		0	0	0	0	0	0	0							0	0		0	0	0		0	0	0
0x38	ETH_MACSR																	Reserved						TSTS	Reserved		MMCTS	MMCRS	MMCS	PMTS	Reserve d		
	Reset value																							0			0	0	0	0			
0x3C	ETH_MACIMR																	Reserved						TSTIM	Reserved					PMTIM	Reserve d		
	Reset value																							0						0			
0x40	ETH_MACA0HR	MO	Reserved															MACA0H															
	Reset value	1	0	0	0	0	0	0	0	0	0	0	0	0	0	0	0	1	1	1	1	1	1	1	1	1	1	1	1	1	1	1	1
0x44	ETH_MACA0LR	MACA0L																															
	Reset value	1	1	1	1	1	1	1	1	1	1	1	1	1	1	1	1	1	1	1	1	1	1	1	1	1	1	1	1	1	1	1	1
0x48	ETH_MACA1HR	AE	SA	MBC[6:0]						Reserved								MACA1H															
	Reset value	0	0	0	0	0	0	0	0									1	1	1	1	1	1	1	1	1	1	1	1	1	1	1	1
0x4C	ETH_MACA1LR	MACA1L																															
	Reset value	1	1	1	1	1	1	1	1	1	1	1	1	1	1	1	1	1	1	1	1	1	1	1	1	1	1	1	1	1	1	1	1
0x50	ETH_MACA2HR	AE	SA	MBC						Reserved								MACA2H															
	Reset value	0	0	0	0	0	0	0	0									1	1	1	1	1	1	1	1	1	1	1	1	1	1	1	1
0x54	ETH_MACA2LR	MACA2L																															
	Reset value	1	1	1	1	1	1	1	1	1	1	1	1	1	1	1	1	1	1	1	1	1	1	1	1	1	1	1	1	1	1	1	1
0x58	ETH_MACA3HR	AE	SA	MBC						Reserved								MACA3H															
	Reset value	0	0	0	0	0	0	0	0									1	1	1	1	1	1	1	1	1	1	1	1	1	1	1	1
0x5C	ETH_MACA3LR	MACA3L																															
	Reset value	1	1	1	1	1	1	1	1	1	1	1	1	1	1	1	1	1	1	1	1	1	1	1	1	1	1	1	1	1	1	1	1
0x100	ETH_MMCCR	Reserved																										MCFHP	MCP	MCF	ROR	CSR	CR
	Reset value																											0	0	0	0	0	0
0x104	ETH_MMCRIR	Reserved														RGUFS		Reserved									RFAES	RFCES	Reserved				
	Reset value															0											0	0					
0x108	ETH_MMCTIR	Reserved										TGFS	Reserved					TGFMSCS	TGFSCS	Reserved													
	Reset value											0						0	0														
0x10C	ETH_MMCRIMR	Reserved														RGUFM		Reserved									RFAEM	RFCEM	Reserved				
	Reset value															0											0	0					

Table 195. Ethernet register map and reset values (continued)

Offset	Register	31	30	29	28	27	26	25	24	23	22	21	20	19	18	17	16	15	14	13	12	11	10	9	8	7	6	5	4	3	2	1	0
0x110	ETH_MMCTIMR	Reserved										TGFM	Reserved					TGFMSCM	TGFSCM	Reserved													
	Reset value											0						0	0														
0x14C	ETH_MMCTGFSCCR	TGFSCC																															
	Reset value	0	0	0	0	0	0	0	0	0	0	0	0	0	0	0	0	0	0	0	0	0	0	0	0	0	0	0	0	0	0	0	0
0x150	ETH_MMCTGFMSCCR	TGFMSCC																															
	Reset value	0	0	0	0	0	0	0	0	0	0	0	0	0	0	0	0	0	0	0	0	0	0	0	0	0	0	0	0	0	0	0	0
0x168	ETH_MMCTGFCR	TGFC																															
	Reset value	0	0	0	0	0	0	0	0	0	0	0	0	0	0	0	0	0	0	0	0	0	0	0	0	0	0	0	0	0	0	0	0
0x194	ETH_MMCRFCECR	RFCEC																															
	Reset value	0	0	0	0	0	0	0	0	0	0	0	0	0	0	0	0	0	0	0	0	0	0	0	0	0	0	0	0	0	0	0	0
0x198	ETH_MMCRFAECR	RFAEC																															
	Reset value	0	0	0	0	0	0	0	0	0	0	0	0	0	0	0	0	0	0	0	0	0	0	0	0	0	0	0	0	0	0	0	0
0x1C4	ETH_MMCRGUFCR	RGUFC																															
	Reset value	0	0	0	0	0	0	0	0	0	0	0	0	0	0	0	0	0	0	0	0	0	0	0	0	0	0	0	0	0	0	0	0
0x700	ETH_PTPTSCR	Reserved													TSPFFMAE	TSCNT		TSSMRME	TSSEME	TSSIPV4FE	TSSIPV6FE	TSSPTPOEFE	TSPTPPSV2E	TSSSR	TSSARFE	Reserved		TTSARU	TSITE	TSSTU	TSSTI	TSFCU	TSE
	Reset value														0	0	0	0	0	1	0	0	0	0	0			0	0	0	0	0	0
0x704	ETH_PTPSSIR	Reserved																								STSSI							
	Reset value																									0	0	0	0	0	0	0	0
0x708	ETH_PTPTSHR	STS[31:0]																															
	Reset value	0	0	0	0	0	0	0	0	0	0	0	0	0	0	0	0	0	0	0	0	0	0	0	0	0	0	0	0	0	0	0	0
0x70C	ETH_PTPTSLR	STPNS	STSS																														
	Reset value	0	0	0	0	0	0	0	0	0	0	0	0	0	0	0	0	0	0	0	0	0	0	0	0	0	0	0	0	0	0	0	0
0x710	ETH_PTPTSHUR	TSUS																															
	Reset value	0	0	0	0	0	0	0	0	0	0	0	0	0	0	0	0	0	0	0	0	0	0	0	0	0	0	0	0	0	0	0	0
0x714	ETH_PTPTSLUR	TSUPNS	TSUSS																														
	Reset value	0	0	0	0	0	0	0	0	0	0	0	0	0	0	0	0	0	0	0	0	0	0	0	0	0	0	0	0	0	0	0	0
0x718	ETH_PTPTSAR	TSA																															
	Reset value	0	0	0	0	0	0	0	0	0	0	0	0	0	0	0	0	0	0	0	0	0	0	0	0	0	0	0	0	0	0	0	0
0x71C	ETH_PTPTTHR	TTSH																															
	Reset value	0	0	0	0	0	0	0	0	0	0	0	0	0	0	0	0	0	0	0	0	0	0	0	0	0	0	0	0	0	0	0	0
0x720	ETH_PTPTTLR	TTSL																															
	Reset value	0	0	0	0	0	0	0	0	0	0	0	0	0	0	0	0	0	0	0	0	0	0	0	0	0	0	0	0	0	0	0	0

Table 195. Ethernet register map and reset values (continued)

Offset	Register	31	30	29	28	27	26	25	24	23	22	21	20	19	18	17	16	15	14	13	12	11	10	9	8	7	6	5	4	3	2	1	0
0x728	ETH_PTPTSSR	Reserved																														TSTTR	TSSO
	Reset value																															0	0
0x72C	ETH_PTPPPSCR	Reserved																													PPS FREQ		
	Reset value																														0	0	0
0x1000	ETH_DMABMR	Reserved					MB	AAB	FPM	USP	RDP						FB	PM		PBL						EDFE	DSL					DA	SR
	Reset value						0	0	0	0	0	0	0	0	0	1	0	0	0	0	0	0	0	0	1	0	0	0	0	0	0	0	1
0x1004	ETH_DMATPDR	TPD																															
	Reset value	0	0	0	0	0	0	0	0	0	0	0	0	0	0	0	0	0	0	0	0	0	0	0	0	0	0	0	0	0	0	0	0
0x1008	ETH_DMARPDR	RPD																															
	Reset value	0	0	0	0	0	0	0	0	0	0	0	0	0	0	0	0	0	0	0	0	0	0	0	0	0	0	0	0	0	0	0	0
0x100C	ETH_DMARDLAR	SRL																															
	Reset value	0	0	0	0	0	0	0	0	0	0	0	0	0	0	0	0	0	0	0	0	0	0	0	0	0	0	0	0	0	0	0	0
0x1010	ETH_DMATDLAR	STL																															
	Reset value	0	0	0	0	0	0	0	0	0	0	0	0	0	0	0	0	0	0	0	0	0	0	0	0	0	0	0	0	0	0	0	0
0x1014	ETH_DMASR	Reserved	TSTS	PMTS	MMCS	Reserved	EBS			TPS			RPS			NIS	AIS	ERS	FBES	Reserved		ETS	RWTS	RPSS	RBUS	RS	TUS	ROS	TJTS	TBUS	TPSS	TS	
	Reset value		0	0	0		0	0	0	0	0	0	0	0	0	0	0	0	0			0	0	0	0	0	0	0	0	0	0	0	
0x1018	ETH_DMAOMR	Reserved					DTCEFD	RSF	DFRF	Reserved		TSF	FTF	Reserved			TTC			ST	Reserved					FEF	FUGF	Reserved	RTC		OSF	SR	Reserved
	Reset value						0	0	0			0	0				0	0	0	0						0	0		0	0	0	0	
0x101C	ETH_DMAIER	Reserved															NISE	AISE	ERIE	FBEIE	Reserved		ETIE	RWTIE	RPSIE	RBUIE	RIE	TUIE	ROIE	TJTIE	TBUIE	TPSIE	TIE
	Reset value																0	0	0	0			0	0	0	0	0	0	0	0	0	0	0
0x1020	ETH_DMAMFBOCR	Reserved		OFOC	MFA											OMFC	MFC																
	Reset value			0	0	0	0	0	0	0	0	0	0	0	0	0	0	0	0	0	0	0	0	0	0	0	0	0	0	0	0	0	0
0x1024	ETH_DMARSWTR	Reserved																								RSWTC							
	Reset value																									0	0	0	0	0	0	0	0
0x1048	ETH_DMACHTDR	HTDAP																															
	Reset value	0	0	0	0	0	0	0	0	0	0	0	0	0	0	0	0	0	0	0	0	0	0	0	0	0	0	0	0	0	0	0	0
0x104C	ETH_DMACHRDR	HRDAP																															
	Reset value	0	0	0	0	0	0	0	0	0	0	0	0	0	0	0	0	0	0	0	0	0	0	0	0	0	0	0	0	0	0	0	0
0x1050	ETH_DMACHTBAR	HTBAP																															
	Reset value	0	0	0	0	0	0	0	0	0	0	0	0	0	0	0	0	0	0	0	0	0	0	0	0	0	0	0	0	0	0	0	0
0x1054	ETH_DMACHRBAR	HRBAP																															
	Reset value	0	0	0	0	0	0	0	0	0	0	0	0	0	0	0	0	0	0	0	0	0	0	0	0	0	0	0	0	0	0	0	0

Refer to *Section 2.3: Memory map* for the register boundary addresses.

34 USB on-the-go full-speed (OTG_FS)

This section applies to the whole STM32F4xx family, unless otherwise specified.

34.1 OTG_FS introduction

Portions Copyright (c) 2004, 2005 Synopsys, Inc. All rights reserved. Used with permission.

This section presents the architecture and the programming model of the OTG_FS controller.

The following acronyms are used throughout this section:

FS	Full-speed
LS	Low-speed
MAC	Media access controller
OTG	On-the-go
PFC	Packet FIFO controller
PHY	Physical layer
USB	Universal serial bus
UTMI	USB 2.0 transceiver macrocell interface (UTMI)

References are made to the following documents:

- USB On-The-Go Supplement, Revision 1.3
- Universal Serial Bus Revision 2.0 Specification

The OTG_FS is a dual-role device (DRD) controller that supports both device and host functions and is fully compliant with the *On-The-Go Supplement to the USB 2.0 Specification*. It can also be configured as a host-only or device-only controller, fully compliant with the *USB 2.0 Specification.* In host mode, the OTG_FS supports full-speed (FS, 12 Mbits/s) and low-speed (LS, 1.5 Mbits/s) transfers whereas in device mode, it only supports full-speed (FS, 12 Mbits/s) transfers. The OTG_FS supports both HNP and SRP. The only external device required is a charge pump for V_{BUS} in host mode.

34.2 OTG_FS main features

The main features can be divided into three categories: general, host-mode and device-mode features.

34.2.1 General features

The OTG_FS interface general features are the following:

- It is USB-IF certified to the Universal Serial Bus Specification Rev 2.0
- It includes full support (PHY) for the optional On-The-Go (OTG) protocol detailed in the On-The-Go Supplement Rev 1.3 specification
  - Integrated support for A-B Device Identification (ID line)
  - Integrated support for host Negotiation Protocol (HNP) and Session Request Protocol (SRP)
  - It allows host to turn V_{BUS} off to conserve battery power in OTG applications
  - It supports OTG monitoring of V_{BUS} levels with internal comparators
  - It supports dynamic host-peripheral switch of role
- It is software-configurable to operate as:
  - SRP capable USB FS Peripheral (B-device)
  - SRP capable USB FS/LS host (A-device)
  - USB On-The-Go Full-Speed Dual Role device
- It supports FS SOF and LS Keep-alives with
  - SOF pulse PAD connectivity (OTG_FS_SOF)
  - SOF pulse internal connection to timer2 (TIM2)
  - Configurable framing period
  - Configurable end of frame interrupt
- It includes power saving features such as system stop during USB Suspend, switch-off of clock domains internal to the digital core, PHY and DFIFO power management
- It features a dedicated RAM of 1.25 Kbytes with advanced FIFO control:
  - Configurable partitioning of RAM space into different FIFOs for flexible and efficient use of RAM
  - Each FIFO can hold multiple packets
  - Dynamic memory allocation
  - Configurable FIFO sizes that are not powers of 2 to allow the use of contiguous memory locations
- It guarantees max USB bandwidth for up to one frame (1ms) without system intervention

34.2.2 Host-mode features

The OTG_FS interface main features and requirements in host-mode are the following:

- External charge pump for V_{BUS} voltage generation.
- Up to 8 host channels (pipes): each channel is dynamically reconfigurable to allocate any type of USB transfer.
- Built-in hardware scheduler holding:
  - Up to 8 interrupt plus isochronous transfer requests in the periodic hardware queue
  - Up to 8 control plus bulk transfer requests in the non-periodic hardware queue
- Management of a shared RX FIFO, a periodic TX FIFO and a nonperiodic TX FIFO for efficient usage of the USB data RAM.

34.2.3 Peripheral-mode features

The OTG_FS interface main features in peripheral-mode are the following:

- 1 bidirectional control endpoint0
- 3 IN endpoints (EPs) configurable to support Bulk, Interrupt or Isochronous transfers
- 3 OUT endpoints configurable to support Bulk, Interrupt or Isochronous transfers
- Management of a shared Rx FIFO and a Tx-OUT FIFO for efficient usage of the USB data RAM
- Management of up to 4 dedicated Tx-IN FIFOs (one for each active IN EP) to put less load on the application
- Support for the soft disconnect feature.

34.3 OTG_FS functional description

Figure 386. OTG full-speed block diagram

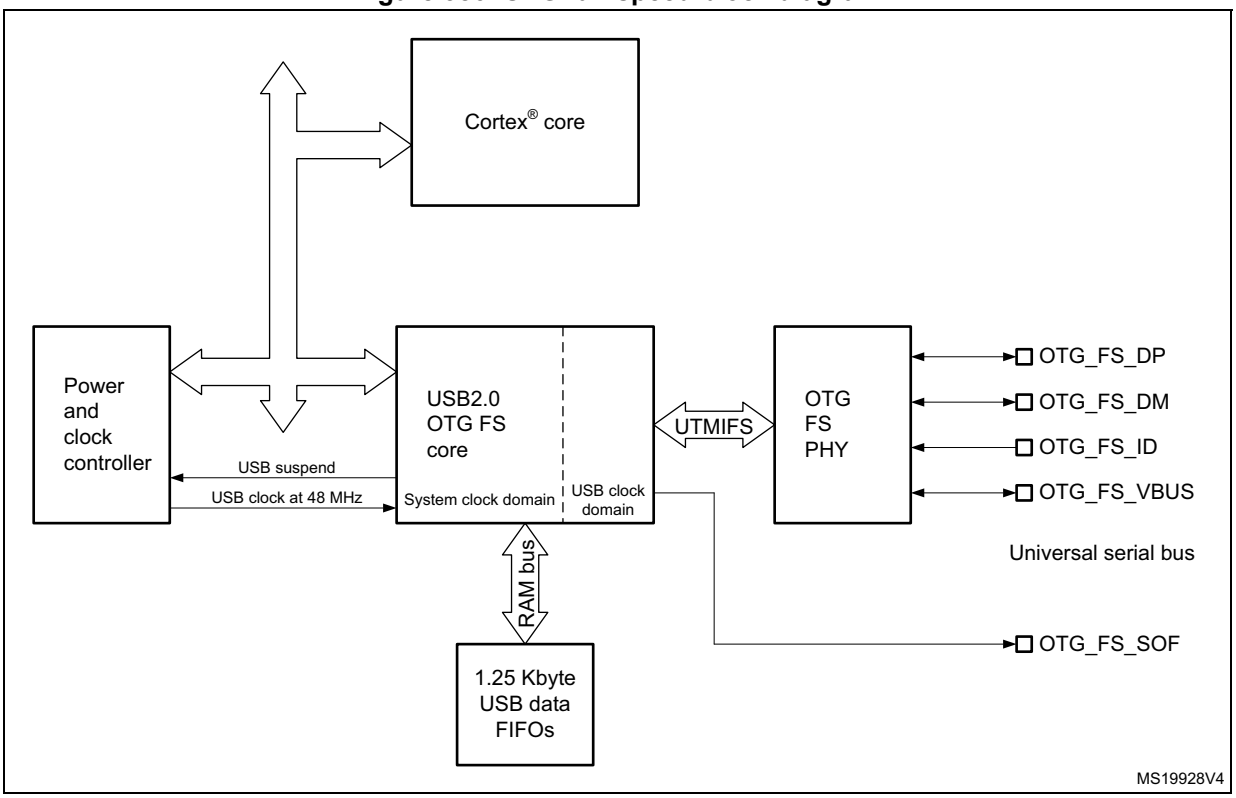

34.3.1 OTG pins

Table 196. OTG_FS input/output pins

Signal name	Signal type	Description
OTG_FS_DP	Digital input/output	USB OTG D+ line
OTG_FS_DM	Digital input/output	USB OTG D- line
OTG_FS_ID	Digital input	USB OTG ID
OTG_FS_VBUS	Analog input	USB OTG VBUS
OTG_FS_SOF	Digital output	USB OTG Start Of Frame (visibility)

34.3.2 OTG full-speed core

The USB OTG FS receives the 48 MHz ±0.25% clock from the reset and clock controller (RCC), via an external quartz. The USB clock is used for driving the 48 MHz domain at full-speed (12 Mbit/s) and must be enabled prior to configuring the OTG FS core.

The CPU reads and writes from/to the OTG FS core registers through the AHB peripheral bus. It is informed of USB events through the single USB OTG interrupt line described in *Section 34.15: OTG_FS interrupts*.

The CPU submits data over the USB by writing 32-bit words to dedicated OTG_FS locations (push registers). The data are then automatically stored into Tx-data FIFOs configured within the USB data RAM. There is one Tx-FIFO push register for each in-endpoint (peripheral mode) or out-channel (host mode).

The CPU receives the data from the USB by reading 32-bit words from dedicated OTG_FS addresses (pop registers). The data are then automatically retrieved from a shared Rx-FIFO configured within the 1.25 KB USB data RAM. There is one Rx-FIFO pop register for each out-endpoint or in-channel.

The USB protocol layer is driven by the serial interface engine (SIE) and serialized over the USB by the full-/low-speed transceiver module within the on-chip physical layer (PHY).

34.3.3 Full-speed OTG PHY

The embedded full-speed OTG PHY is controlled by the OTG FS core and conveys USB control & data signals through the full-speed subset of the UTMI+ Bus (UTMIFS). It provides the physical support to USB connectivity.
The full-speed OTG PHY includes the following components:

- FS/LS transceiver module used by both host and device. It directly drives transmission and reception on the single-ended USB lines.
- integrated ID pull-up resistor used to sample the ID line for A/B device identification.
- DP/DM integrated pull-up and pull-down resistors controlled by the OTG_FS core depending on the current role of the device. As a peripheral, it enables the DP pull-up resistor to signal full-speed peripheral connections as soon as V_{BUS} is sensed to be at a valid level (B-session valid). In host mode, pull-down resistors are enabled on both DP/DM. Pull-up and pull-down resistors are dynamically switched when the device's role is changed via the host negotiation protocol (HNP).
- Pull-up/pull-down resistor ECN circuit. The DP pull-up consists of 2 resistors controlled separately from the OTG_FS as per the resistor Engineering Change Notice applied to USB Rev2.0. The dynamic trimming of the DP pull-up strength allows for better noise rejection and Tx/Rx signal quality.
- V_{BUS} sensing comparators with hysteresis used to detect V_{BUS} Valid, A-B Session Valid and session-end voltage thresholds. They are used to drive the session request protocol (SRP), detect valid startup and end-of-session conditions, and constantly monitor the V_{BUS} supply during USB operations.
- V_{BUS} pulsing method circuit used to charge/discharge V_{BUS} through resistors during the SRP (weak drive).

Caution: To guarantee a correct operation for the USB OTG FS peripheral, the AHB frequency should be higher than 14.2 MHz.

34.4 OTG dual role device (DRD)

Figure 387. OTG A-B device connection

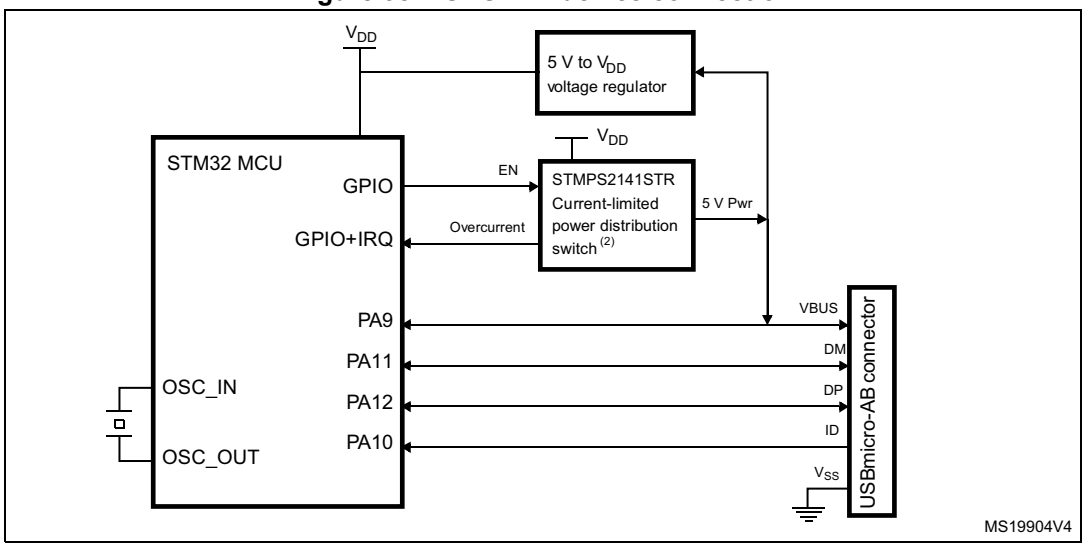

1. External voltage regulator only needed when building a V_{BUS} powered device
2. STMPS2141STR needed only if the application has to support a V_{BUS} powered device. A basic power switch can be used if 5 V are available on the application board.

34.4.1 ID line detection

The host or peripheral (the default) role is assumed depending on the ID input pin (OTG_FS_ID). The ID line status is determined on plugging in the USB, depending on which side of the USB cable is connected to the micro-AB receptacle.

- If the B-side of the USB cable is connected with a floating ID wire, the integrated pull-up resistor detects a high ID level and the default Peripheral role is confirmed. In this configuration the OTG_FS complies with the standard FSM described by section 6.8.2: On-The-Go B-device of the On-The-Go Specification Rev1.3 supplement to the USB2.0.
- If the A-side of the USB cable is connected with a grounded ID, the OTG_FS issues an ID line status change interrupt (CIDSCHG bit in OTG_FS_GINTSTS) for host software initialization, and automatically switches to the host role. In this configuration the OTG_FS complies with the standard FSM described by section 6.8.1: On-The-Go A-device of the On-The-Go Specification Rev1.3 supplement to the USB2.0.

34.4.2 HNP dual role device

The HNP capable bit in the Global USB configuration register (HNPCAP bit in OTG_FS_GUSBCFG) enables the OTG_FS core to dynamically change its role from A-host to A-peripheral and vice-versa, or from B-Peripheral to B-host and vice-versa according to the host negotiation protocol (HNP). The current device status can be read by the combined values of the Connector ID Status bit in the Global OTG control and status register (CIDSTS bit in OTG_FS_GOTGCTL) and the current mode of operation bit in the global interrupt and status register (CMOD bit in OTG_FS_GINTSTS).

The HNP program model is described in detail in *Section 34.17: OTG_FS programming model*.

34.4.3 SRP dual role device

The SRP capable bit in the global USB configuration register (SRPCAP bit in OTG_FS_GUSBCFG) enables the OTG_FS core to switch off the generation of V_{BUS} for the A-device to save power. Note that the A-device is always in charge of driving V_{BUS} regardless of the host or peripheral role of the OTG_FS.

the SRP A/B-device program model is described in detail in *Section 34.17: OTG_FS programming model*.

34.5 USB peripheral

This section gives the functional description of the OTG_FS in the USB peripheral mode. The OTG_FS works as an USB peripheral in the following circumstances:

- OTG B-Peripheral
  - OTG B-device default state if B-side of USB cable is plugged in
- OTG A-Peripheral
  - OTG A-device state after the HNP switches the OTG_FS to its peripheral role
- B-device
  - If the ID line is present, functional and connected to the B-side of the USB cable, and the HNP-capable bit in the Global USB Configuration register (HNPCAP bit in OTG_FS_GUSBCFG) is cleared (see On-The-Go Rev1.3 par. 6.8.3).
- Peripheral only (see *Figure 388: USB peripheral-only connection*)
  - The force device mode bit in the Global USB configuration register (FDMOD in OTG_FS_GUSBCFG) is set to 1, forcing the OTG_FS core to work as a USB peripheral-only (see On-The-Go Rev1.3 par. 6.8.3). In this case, the ID line is ignored even if present on the USB connector.

Note: To build a bus-powered device implementation in case of the B-device or peripheral-only configuration, an external regulator has to be added that generates the V_{DD} chip-supply from V_{BUS}.

The V_{BUS} pin can be freed by disabling the V_{BUS} sensing option. This is done by setting the NOVBUSSENS bit in the OTG_FS_GCCFG register. In this case the V_{BUS} is considered internally to be always at V_{BUS} valid level (5 V).

Figure 388. USB peripheral-only connection

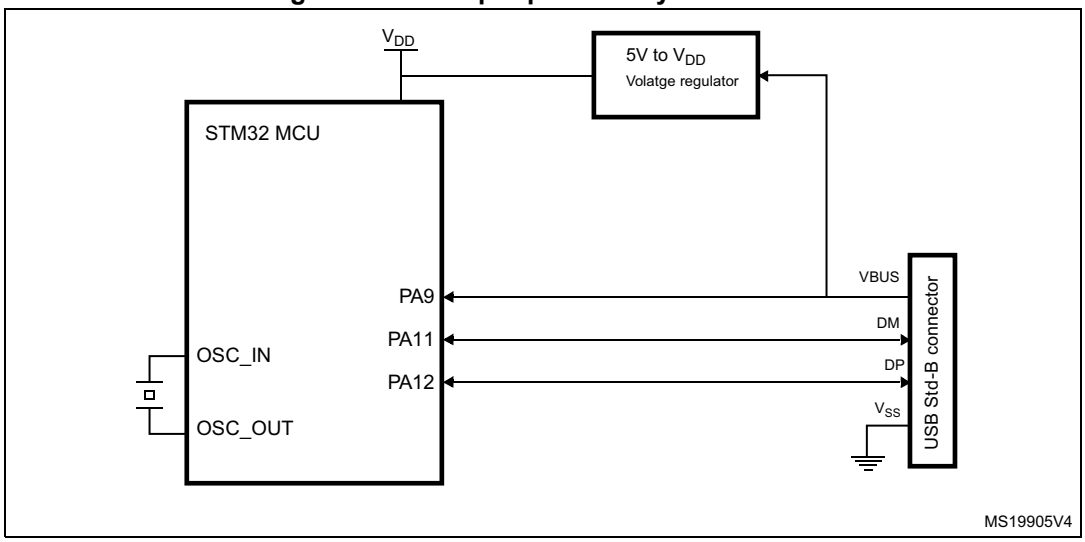

1. Use a regulator to build a bus-powered device.

34.5.1 SRP-capable peripheral

The SRP capable bit in the Global USB configuration register (SRPCAP bit in OTG_FS_GUSBCFG) enables the OTG_FS to support the session request protocol (SRP). In this way, it allows the remote A-device to save power by switching off V_{BUS} while the USB session is suspended.

The SRP peripheral mode program model is described in detail in the *B-device session request protocol* section.

34.5.2 Peripheral states

Powered state

The V_{BUS} input detects the B-Session valid voltage by which the USB peripheral is allowed to enter the powered state (see USB2.0 par9.1). The OTG_FS then automatically connects the DP pull-up resistor to signal full-speed device connection to the host and generates the session request interrupt (SRQINT bit in OTG_FS_GINTSTS) to notify the powered state.

The V_{BUS} input also ensures that valid V_{BUS} levels are supplied by the host during USB operations. If a drop in V_{BUS} below B-session valid happens to be detected (for instance because of a power disturbance or if the host port has been switched off), the OTG_FS automatically disconnects and the session end detected (SEDET bit in OTG_FS_GOTGINT) interrupt is generated to notify that the OTG_FS has exited the powered state.

In the powered state, the OTG_FS expects to receive some reset signaling from the host. No other USB operation is possible. When a reset signaling is received the reset detected interrupt (USBRST in OTG_FS_GINTSTS) is generated. When the reset signaling is complete, the enumeration done interrupt (ENUMDNE bit in OTG_FS_GINTSTS) is generated and the OTG_FS enters the Default state.

Soft disconnect

The powered state can be exited by software with the soft disconnect feature. The DP pull-up resistor is removed by setting the soft disconnect bit in the device control register (SDIS bit in OTG_FS_DCTL), causing a device disconnect detection interrupt on the host side even though the USB cable was not really removed from the host port.

Default state

In the Default state the OTG_FS expects to receive a SET_ADDRESS command from the host. No other USB operation is possible. When a valid SET_ADDRESS command is decoded on the USB, the application writes the corresponding number into the device address field in the device configuration register (DAD bit in OTG_FS_DCFG). The OTG_FS then enters the address state and is ready to answer host transactions at the configured USB address.

Suspended state

The OTG_FS peripheral constantly monitors the USB activity. After counting 3 ms of USB idleness, the early suspend interrupt (ESUSP bit in OTG_FS_GINTSTS) is issued, and confirmed 3 ms later, if appropriate, by the suspend interrupt (USBSUSP bit in OTG_FS_GINTSTS). The device suspend bit is then automatically set in the device status register (SUSPSTS bit in OTG_FS_DSTS) and the OTG_FS enters the suspended state.

The suspended state may optionally be exited by the device itself. In this case the application sets the remote wakeup signaling bit in the device control register (RWUSIG bit in OTG_FS_DCTL) and clears it after 1 to 15 ms.

When a resume signaling is detected from the host, the resume interrupt (WKUPINT bit in OTG_FS_GINTSTS) is generated and the device suspend bit is automatically cleared.

34.5.3 Peripheral endpoints

The OTG_FS core instantiates the following USB endpoints:

- Control endpoint 0:
  - Bidirectional and handles control messages only
  - Separate set of registers to handle in and out transactions
  - Proper control (OTG_FS_DIEPCTL0/OTG_FS_DOEPCTL0), transfer configuration (OTG_FS_DIEPTSIZ0/OTG_FS_DIEPTSIZ0), and status-interrupt (OTG_FS_DIEPINTx/)OTG_FS_DOEPINT0) registers. The available set of bits inside the control and transfer size registers slightly differs from that of other endpoints
- 3 IN endpoints
  - Each of them can be configured to support the isochronous, bulk or interrupt transfer type
  - Each of them has proper control (OTG_FS_DIEPCTL*x*), transfer configuration (OTG_FS_DIEPTSIZ*x*), and status-interrupt (OTG_FS_DIEPINT*x*) registers
  - The Device IN endpoints common interrupt mask register (OTG_FS_DIEPMSK) is available to enable/disable a single kind of endpoint interrupt source on all of the IN endpoints (EP0 included)
  - Support for incomplete isochronous IN transfer interrupt (IISOIXFR bit in OTG_FS_GINTSTS), asserted when there is at least one isochronous IN endpoint

on which the transfer is not completed in the current frame. This interrupt is asserted along with the end of periodic frame interrupt (OTG_FS_GINTSTS/EOPF).

- 3 OUT endpoints
  - Each of them can be configured to support the isochronous, bulk or interrupt transfer type
  - Each of them has a proper control (OTG_FS_DOEPCTL*x*), transfer configuration (OTG_FS_DOEPTSIZ*x*) and status-interrupt (OTG_FS_DOEPINT*x*) register
  - Device Out endpoints common interrupt mask register (OTG_FS_DOEPMSK) is available to enable/disable a single kind of endpoint interrupt source on all of the OUT endpoints (EP0 included)
  - Support for incomplete isochronous OUT transfer interrupt (INCOMPISOOUT bit in OTG_FS_GINTSTS), asserted when there is at least one isochronous OUT endpoint on which the transfer is not completed in the current frame. This interrupt is asserted along with the end of periodic frame interrupt (OTG_FS_GINTSTS/EOPF).

Endpoint control

- The following endpoint controls are available to the application through the device endpoint-*x* IN/OUT control register (DIEPCTL*x*/DOEPCTL*x*):
  - Endpoint enable/disable
  - Endpoint activate in current configuration
  - Program USB transfer type (isochronous, bulk, interrupt)
  - Program supported packet size
  - Program Tx-FIFO number associated with the IN endpoint
  - Program the expected or transmitted data0/data1 PID (bulk/interrupt only)
  - Program the even/odd frame during which the transaction is received or transmitted (isochronous only)
  - Optionally program the NAK bit to always negative-acknowledge the host regardless of the FIFO status
  - Optionally program the STALL bit to always stall host tokens to that endpoint
  - Optionally program the SNOOP mode for OUT endpoint not to check the CRC field of received data

Endpoint transfer

The device endpoint-*x* transfer size registers (DIEPTSIZ*x*/DOEPTSIZ*x*) allow the application to program the transfer size parameters and read the transfer status. Programming must be done before setting the endpoint enable bit in the endpoint control register. Once the endpoint is enabled, these fields are read-only as the OTG FS core updates them with the current transfer status.

The following transfer parameters can be programmed:

- Transfer size in bytes
- Number of packets that constitute the overall transfer size

Endpoint status/interrupt

The device endpoint-*x* interrupt registers (DIEPINT*x*/DOPEPINT*x)* indicate the status of an endpoint with respect to USB- and AHB-related events. The application must read these registers when the OUT endpoint interrupt bit or the IN endpoint interrupt bit in the core interrupt register (OEPINT bit in OTG_FS_GINTSTS or IEPINT bit in OTG_FS_GINTSTS, respectively) is set. Before the application can read these registers, it must first read the device all endpoints interrupt (OTG_FS_DAINT) register to get the exact endpoint number for the device endpoint-*x* interrupt register. The application must clear the appropriate bit in this register to clear the corresponding bits in the DAINT and GINTSTS registers

The peripheral core provides the following status checks and interrupt generation:

- Transfer completed interrupt, indicating that data transfer was completed on both the application (AHB) and USB sides
- Setup stage has been done (control-out only)
- Associated transmit FIFO is half or completely empty (in endpoints)
- NAK acknowledge has been transmitted to the host (isochronous-in only)
- IN token received when Tx-FIFO was empty (bulk-in/interrupt-in only)
- Out token received when endpoint was not yet enabled
- Babble error condition has been detected
- Endpoint disable by application is effective
- Endpoint NAK by application is effective (isochronous-in only)
- More than 3 back-to-back setup packets were received (control-out only)
- Timeout condition detected (control-in only)
- Isochronous out packet has been dropped, without generating an interrupt

34.6 USB host

This section gives the functional description of the OTG_FS in the USB host mode. The OTG_FS works as a USB host in the following circumstances:

- OTG A-host
  - OTG A-device default state when the A-side of the USB cable is plugged in
- OTG B-host
  - OTG B-device after HNP switching to the host role
- A-device
  - If the ID line is present, functional and connected to the A-side of the USB cable, and the HNP-capable bit is cleared in the Global USB Configuration register (HNPCAP bit in OTG_FS_GUSBCFG). Integrated pull-down resistors are automatically set on the DP/DM lines.
- Host only (see *Figure 389: USB host-only connection*).
  - The force host mode bit in the global USB configuration register (FHMOD bit in OTG_FS_GUSBCFG) forces the OTG_FS core to work as a USB host-only. In this case, the ID line is ignored even if present on the USB connector. Integrated pull-down resistors are automatically set on the DP/DM lines.

Note: On-chip 5 V V_{BUS} generation is not supported. For this reason, a charge pump or, if 5 V are available on the application board, a basic power switch must be added externally to drive

the 5 V V_{BUS} line. The external charge pump can be driven by any GPIO output. This is required for the OTG A-host, A-device and host-only configurations.

The V_{BUS} input ensures that valid V_{BUS} levels are supplied by the charge pump during USB operations while the charge pump overcurrent output can be input to any GPIO pin configured to generate port interrupts. The overcurrent ISR must promptly disable the V_{BUS} generation.

The V_{BUS} pin can be freed by disabling the V_{BUS} sensing option. This is done by setting the NOVBUSSENS bit in the OTG_FS_GCCFG register. In this case the V_{BUS} is considered internally to be always at V_{BUS} valid level (5 V).

Figure 389. USB host-only connection

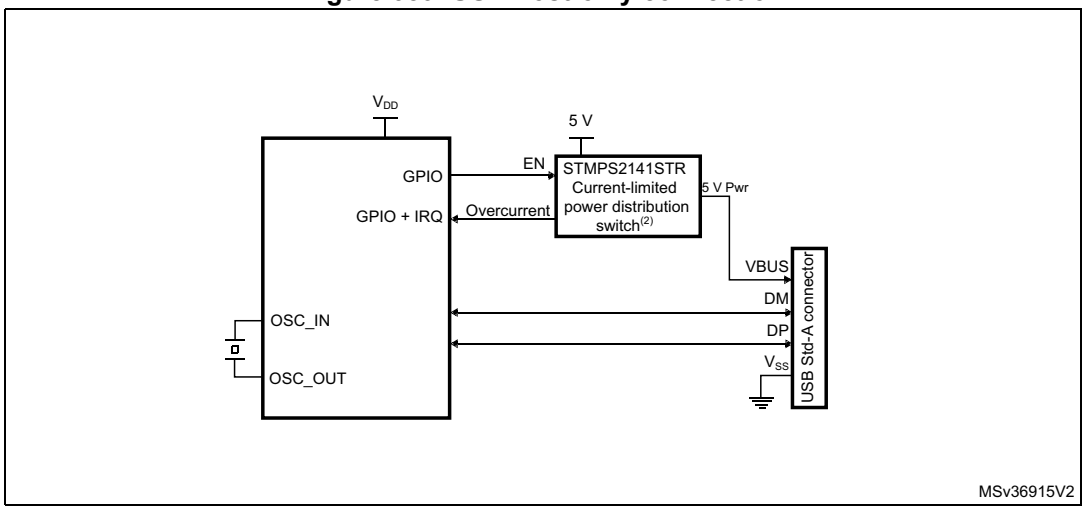

1. STMPS2141STR needed only if the application has to support a V_{BUS} powered device. A basic power switch can be used if 5 V are available on the application board.
2. V_{DD} range is between 2 V and 3.6 V.

34.6.1 SRP-capable host

SRP support is available through the SRP capable bit in the global USB configuration register (SRPCAP bit in OTG_FS_GUSBCFG). With the SRP feature enabled, the host can save power by switching off the V_{BUS} power while the USB session is suspended.

The SRP host mode program model is described in detail in the *A-device session request protocol* section.

34.6.2 USB host states

Host port power

On-chip 5 V V_{BUS} generation is not supported. For this reason, a charge pump or, if 5 V are available on the application board, a basic power switch, must be added externally to drive the 5 V V_{BUS} line. The external charge pump can be driven by any GPIO output. When the application decides to power on V_{BUS} using the chosen GPIO, it must also set the port power bit in the host port control and status register (PPWR bit in OTG_FS_HPRT).

V_{BUS} valid

When HNP or SRP is enabled the VBUS sensing pin (PA9) pin should be connected to V_{BUS}. The V_{BUS} input ensures that valid V_{BUS} levels are supplied by the charge pump during USB operations. Any unforeseen V_{BUS} voltage drop below the V_{BUS} valid threshold (4.25 V) leads to an OTG interrupt triggered by the session end detected bit (SEDET bit in OTG_FS_GOTGINT). The application is then required to remove the V_{BUS} power and clear the port power bit.

When HNP and SRP are both disabled, the VBUS sensing pin (PA9) should not be connected to V_{BUS}. This pin can be can be used as GPIO.

The charge pump overcurrent flag can also be used to prevent electrical damage. Connect the overcurrent flag output from the charge pump to any GPIO input and configure it to generate a port interrupt on the active level. The overcurrent ISR must promptly disable the V_{BUS} generation and clear the port power bit.

Host detection of a peripheral connection

If SRP or HNP are enabled, even if USB peripherals or B-devices can be attached at any time, the OTG_FS will not detect any bus connection until V_{BUS} is no longer sensed at a valid level (5 V). When V_{BUS} is at a valid level and a remote B-device is attached, the OTG_FS core issues a host port interrupt triggered by the device connected bit in the host port control and status register (PCDET bit in OTG_FS_HPRT).

When HNP and SRP are both disabled, USB peripherals or B-device are detected as soon as they are connected. The OTG_FS core issues a host port interrupt triggered by the device connected bit in the host port control and status (PCDET bit in OTG_FS_HPRT).

Host detection of peripheral a disconnection

The peripheral disconnection event triggers the disconnect detected interrupt (DISCINT bit in OTG_FS_GINTSTS).

Host enumeration

After detecting a peripheral connection the host must start the enumeration process by sending USB reset and configuration commands to the new peripheral.

Before starting to drive a USB reset, the application waits for the OTG interrupt triggered by the debounce done bit (DBCDNE bit in OTG_FS_GOTGINT), which indicates that the bus is stable again after the electrical debounce caused by the attachment of a pull-up resistor on DP (FS) or DM (LS).

The application drives a USB reset signaling (single-ended zero) over the USB by keeping the port reset bit set in the host port control and status register (PRST bit in OTG_FS_HPRT) for a minimum of 10 ms and a maximum of 20 ms. The application takes care of the timing count and then of clearing the port reset bit.

Once the USB reset sequence has completed, the host port interrupt is triggered by the port enable/disable change bit (PENCHNG bit in OTG_FS_HPRT). This informs the application that the speed of the enumerated peripheral can be read from the port speed field in the host port control and status register (PSPD bit in OTG_FS_HPRT) and that the host is starting to drive SOFs (FS) or Keep alives (LS). The host is now ready to complete the peripheral enumeration by sending peripheral configuration commands.

Host suspend

The application decides to suspend the USB activity by setting the port suspend bit in the host port control and status register (PSUSP bit in OTG_FS_HPRT). The OTG_FS core stops sending SOFs and enters the suspended state.

The suspended state can be optionally exited on the remote device's initiative (remote wakeup). In this case the remote wakeup interrupt (WKUPINT bit in OTG_FS_GINTSTS) is generated upon detection of a remote wakeup signaling, the port resume bit in the host port control and status register (PRES bit in OTG_FS_HPRT) self-sets, and resume signaling is automatically driven over the USB. The application must time the resume window and then clear the port resume bit to exit the suspended state and restart the SOF.

If the suspended state is exited on the host initiative, the application must set the port resume bit to start resume signaling on the host port, time the resume window and finally clear the port resume bit.

34.6.3 Host channels

The OTG_FS core instantiates 8 host channels. Each host channel supports an USB host transfer (USB pipe). The host is not able to support more than 8 transfer requests at the same time. If more than 8 transfer requests are pending from the application, the host controller driver (HCD) must re-allocate channels when they become available from previous duty, that is, after receiving the transfer completed and channel halted interrupts.

Each host channel can be configured to support in/out and any type of periodic/nonperiodic transaction. Each host channel makes us of proper control (HCCHAR*x*), transfer configuration (HCTSIZ*x*) and status/interrupt (HCINT*x*) registers with associated mask (HCINTMSK*x*) registers.

Host channel control

- The following host channel controls are available to the application through the host channel-*x* characteristics register (HCCHAR*x*):
  - Channel enable/disable
  - Program the FS/LS speed of target USB peripheral
  - Program the address of target USB peripheral
  - Program the endpoint number of target USB peripheral
  - Program the transfer IN/OUT direction
  - Program the USB transfer type (control, bulk, interrupt, isochronous)
  - Program the maximum packet size (MPS)
  - Program the periodic transfer to be executed during odd/even frames

Host channel transfer

The host channel transfer size registers (HCTSIZ*x*) allow the application to program the transfer size parameters, and read the transfer status. Programming must be done before setting the channel enable bit in the host channel characteristics register. Once the endpoint

is enabled the packet count field is read-only as the OTG FS core updates it according to the current transfer status.

- The following transfer parameters can be programmed:
  - transfer size in bytes
  - number of packets making up the overall transfer size
  - initial data PID

Host channel status/interrupt

The host channel-*x* interrupt register (HCINT*x*) indicates the status of an endpoint with respect to USB- and AHB-related events. The application must read these register when the host channels interrupt bit in the core interrupt register (HCINT bit in OTG_FS_GINTSTS) is set. Before the application can read these registers, it must first read the host all channels interrupt (HCAINT) register to get the exact channel number for the host channel-x interrupt register. The application must clear the appropriate bit in this register to clear the corresponding bits in the HAINT and GINTSTS registers. The mask bits for each interrupt source of each channel are also available in the OTG_FS_HCINTMSK-x register.

- The host core provides the following status checks and interrupt generation:
  - Transfer completed interrupt, indicating that the data transfer is complete on both the application (AHB) and USB sides
  - Channel has stopped due to transfer completed, USB transaction error or disable command from the application
  - Associated transmit FIFO is half or completely empty (IN endpoints)
  - ACK response received
  - NAK response received
  - STALL response received
  - USB transaction error due to CRC failure, timeout, bit stuff error, false EOP
  - Babble error
  - fraMe overrun
  - dAta toggle error

34.6.4 Host scheduler

The host core features a built-in hardware scheduler which is able to autonomously re-order and manage the USB transaction requests posted by the application. At the beginning of each frame the host executes the periodic (isochronous and interrupt) transactions first, followed by the nonperiodic (control and bulk) transactions to achieve the higher level of priority granted to the isochronous and interrupt transfer types by the USB specification.

The host processes the USB transactions through request queues (one for periodic and one for nonperiodic). Each request queue can hold up to 8 entries. Each entry represents a pending transaction request from the application, and holds the IN or OUT channel number along with other information to perform a transaction on the USB. The order in which the requests are written to the queue determines the sequence of the transactions on the USB interface.

At the beginning of each frame, the host processes the periodic request queue first, followed by the nonperiodic request queue. The host issues an incomplete periodic transfer interrupt (IPXFR bit in OTG_FS_GINTSTS) if an isochronous or interrupt transaction scheduled for the current frame is still pending at the end of the current frame. The OTG HS core is fully

responsible for the management of the periodic and nonperiodic request queues.The periodic transmit FIFO and queue status register (HPTXSTS) and nonperiodic transmit FIFO and queue status register (HNPTXSTS) are read-only registers which can be used by the application to read the status of each request queue. They contain:

- The number of free entries currently available in the periodic (nonperiodic) request queue (8 max)
- Free space currently available in the periodic (nonperiodic) Tx-FIFO (out-transactions)
- IN/OUT token, host channel number and other status information.

As request queues can hold a maximum of 8 entries each, the application can push to schedule host transactions in advance with respect to the moment they physically reach the SB for a maximum of 8 pending periodic transactions plus 8 pending nonperiodic transactions.

To post a transaction request to the host scheduler (queue) the application must check that there is at least 1 entry available in the periodic (nonperiodic) request queue by reading the PTXQSAV bits in the OTG_FS_HNPTXSTS register or NPTQXSAV bits in the OTG_FS_HNPTXSTS register.

34.7 SOF trigger

Figure 390. SOF connectivity

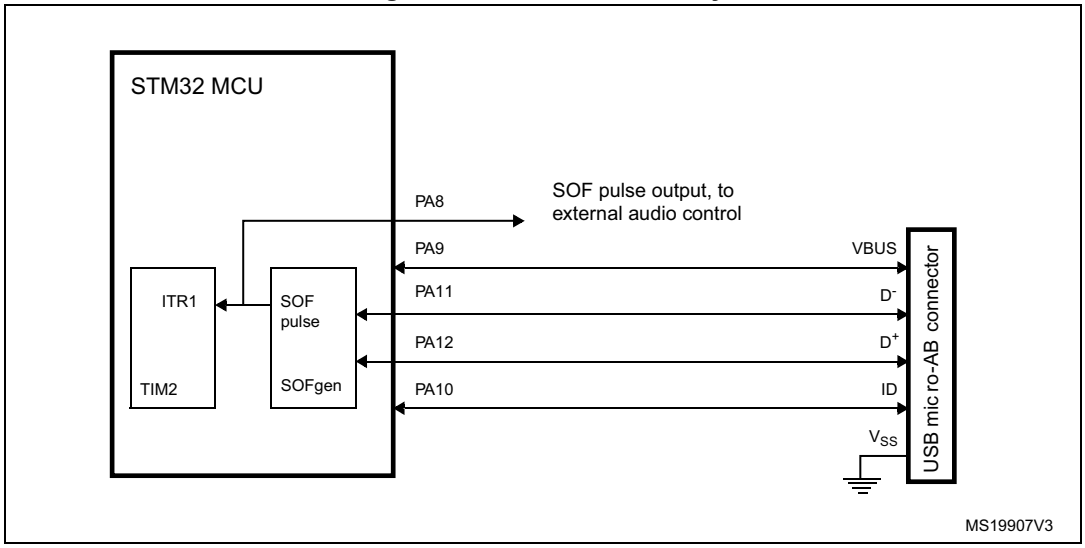

The OTG FS core provides means to monitor, track and configure SOF framing in the host and peripheral, as well as an SOF pulse output connectivity feature.

Such utilities are especially useful for adaptive audio clock generation techniques, where the audio peripheral needs to synchronize to the isochronous stream provided by the PC, or the host needs to trim its framing rate according to the requirements of the audio peripheral.

34.7.1 Host SOFs

In host mode the number of PHY clocks occurring between the generation of two consecutive SOF (FS) or Keep-alive (LS) tokens is programmable in the host frame interval register (HFIR), thus providing application control over the SOF framing period. An interrupt

is generated at any start of frame (SOF bit in OTH_FS_GINTSTS). The current frame number and the time remaining until the next SOF are tracked in the host frame number register (HFNUM).

An SOF pulse signal, generated at any SOF starting token and with a width of 20 HCLK cycles, can be made available externally on the OTG_FS_SOF pin using the SOFOUTEN bit in the global control and configuration register. The SOF pulse is also internally connected to the input trigger of timer 2 (TIM2), so that the input capture feature, the output compare feature and the timer can be triggered by the SOF pulse. The TIM2 connection is enabled through the ITR1_RMP bits of TIM2_OR register.

34.7.2 Peripheral SOFs

In device mode, the start of frame interrupt is generated each time an SOF token is received on the USB (SOF bit in OTH_FS_GINTSTS). The corresponding frame number can be read from the device status register (FNSOF bit in OTG_FS_DSTS). An SOF pulse signal with a width of 20 HCLK cycles is also generated and can be made available externally on the OTG_FS_SOF pin by using the SOF output enable bit in the global control and configuration register (SOFOUTEN bit in OTG_FS_GCCFG). The SOF pulse signal is also internally connected to the TIM2 input trigger, so that the input capture feature, the output compare feature and the timer can be triggered by the SOF pulse. The TIM2 connection is enabled through the ITR1_RMP bits of the TIM2 option register (TIM2_OR).

The end of periodic frame interrupt (GINTSTS/EOPF) is used to notify the application when 80%, 85%, 90% or 95% of the time frame interval elapsed depending on the periodic frame interval field in the device configuration register (PFIVL bit in OTG_FS_DCFG). This feature can be used to determine if all of the isochronous traffic for that frame is complete.

34.8 OTG low-power modes

Table 197 below defines the STM32 low power modes and their compatibility with the OTG.

Table 197. Compatibility of STM32 low power modes with the OTG

Mode	Description	USB compatibility
Run	MCU fully active	Required when USB not in suspend state.
Sleep	USB suspend exit causes the device to exit Sleep mode. Peripheral registers content is kept.	Available while USB is in suspend state.
Stop	USB suspend exit causes the device to exit Stop mode. Peripheral registers content is kept(1).	Available while USB is in suspend state.
Standby	Powered-down. The peripheral must be reinitialized after exiting Standby mode.	Not compatible with USB applications.

1. Within Stop mode there are different possible settings. Some restrictions may also exist, please refer to *Section 5: Power controller (PWR)* to understand which (if any) restrictions apply when using OTG.

The power consumption of the OTG PHY is controlled by three bits in the general core configuration register:

- PHY power down (GCCFG/PWRDWN)

  It switches on/off the full-speed transceiver module of the PHY. It must be preliminarily set to allow any USB operation.
- A-V_{BUS} sensing enable (GCCFG/VBUSASEN)

  It switches on/off the V_{BUS} comparators associated with A-device operations. It must be set when in A-device (USB host) mode and during HNP.
- B-V_{BUS} sensing enable (GCCFG/VBUSASEN)

  It switches on/off the V_{BUS} comparators associated with B-device operations. It must be set when in B-device (USB peripheral) mode and during HNP.

Power reduction techniques are available while in the USB suspended state, when the USB session is not yet valid or the device is disconnected.

- Stop PHY clock (STPPCLK bit in OTG_FS_PCGCCTL)

  When setting the stop PHY clock bit in the clock gating control register, most of the 48 MHz clock domain internal to the OTG full-speed core is switched off by clock gating. The dynamic power consumption due to the USB clock switching activity is cut even if the 48 MHz clock input is kept running by the application

  Most of the transceiver is also disabled, and only the part in charge of detecting the asynchronous resume or remote wakeup event is kept alive.
- Gate HCLK (GATEHCLK bit in OTG_FS_PCGCCTL)

  When setting the Gate HCLK bit in the clock gating control register, most of the system clock domain internal to the OTG_FS core is switched off by clock gating. Only the register read and write interface is kept alive. The dynamic power consumption due to the USB clock switching activity is cut even if the system clock is kept running by the application for other purposes.
- USB system stop

  When the OTG_FS is in the USB suspended state, the application may decide to drastically reduce the overall power consumption by a complete shut down of all the clock sources in the system. USB System Stop is activated by first setting the Stop PHY clock bit and then configuring the system deep sleep mode in the power control system module (PWR).

  The OTG_FS core automatically reactivates both system and USB clocks by asynchronous detection of remote wakeup (as an host) or resume (as a device) signaling on the USB.

To save dynamic power, the USB data FIFO is clocked only when accessed by the OTG_FS core.

34.9 Dynamic update of the OTG_FS_HFIR register

The USB core embeds a dynamic trimming capability of SOF framing period in host mode allowing to synchronize an external device with the SOF frames.

When the OTG_FS_HFIR register is changed within a current SOF frame, the SOF period correction is applied in the next frame as described in *Figure 391*.

Figure 391. Updating OTG_FS_HFIR dynamically

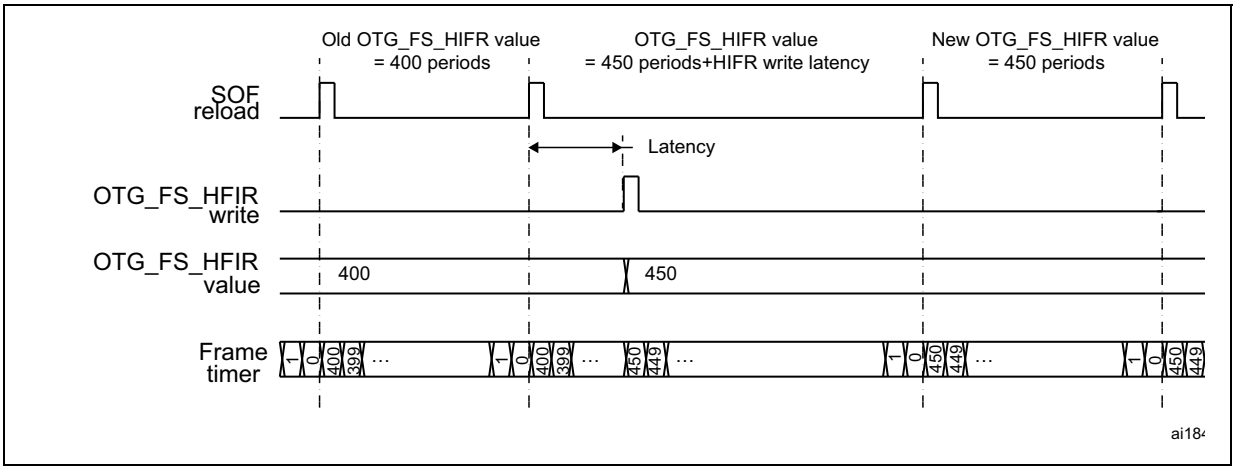

34.10 USB data FIFOs

The USB system features 1.25 Kbyte of dedicated RAM with a sophisticated FIFO control mechanism. The packet FIFO controller module in the OTG_FS core organizes RAM space into Tx-FIFOs into which the application pushes the data to be temporarily stored before the USB transmission, and into a single Rx FIFO where the data received from the USB are temporarily stored before retrieval (popped) by the application. The number of instructed FIFOs and how these are organized inside the RAM depends on the device's role. In peripheral mode an additional Tx-FIFO is instructed for each active IN endpoint. Any FIFO size is software configured to better meet the application requirements.

34.11 Peripheral FIFO architecture

Figure 392. Device-mode FIFO address mapping and AHB FIFO access mapping

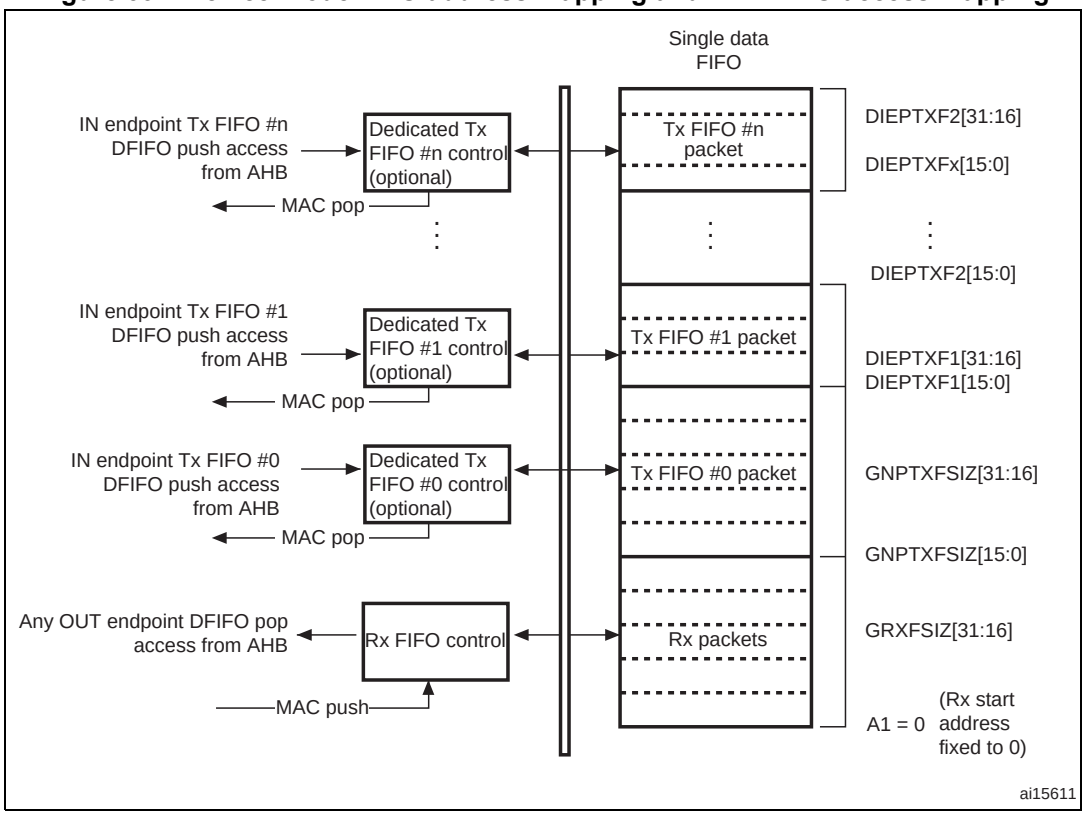

34.11.1 Peripheral Rx FIFO

The OTG peripheral uses a single receive FIFO that receives the data directed to all OUT endpoints. Received packets are stacked back-to-back until free space is available in the Rx-FIFO. The status of the received packet (which contains the OUT endpoint destination number, the byte count, the data PID and the validity of the received data) is also stored by the core on top of the data payload. When no more space is available, host transactions are NACKed and an interrupt is received on the addressed endpoint. The size of the receive FIFO is configured in the receive FIFO Size register (GRXFSIZ).

The single receive FIFO architecture makes it more efficient for the USB peripheral to fill in the receive RAM buffer:

- All OUT endpoints share the same RAM buffer (shared FIFO)
- The OTG FS core can fill in the receive FIFO up to the limit for any host sequence of OUT tokens

The application keeps receiving the Rx-FIFO non-empty interrupt (RXFLVL bit in OTG_FS_GINTSTS) as long as there is at least one packet available for download. It reads the packet information from the receive status read and pop register (GRXSTSP) and finally pops data off the receive FIFO by reading from the endpoint-related pop address.

34.11.2 Peripheral Tx FIFOs

The core has a dedicated FIFO for each IN endpoint. The application configures FIFO sizes by writing the non periodic transmit FIFO size register (OTG_FS_TX0FSIZ) for IN endpoint0 and the device IN endpoint transmit FIFOx registers (DIEPTXFx) for IN endpoint-x.

34.12 Host FIFO architecture

Figure 393. Host-mode FIFO address mapping and AHB FIFO access mapping

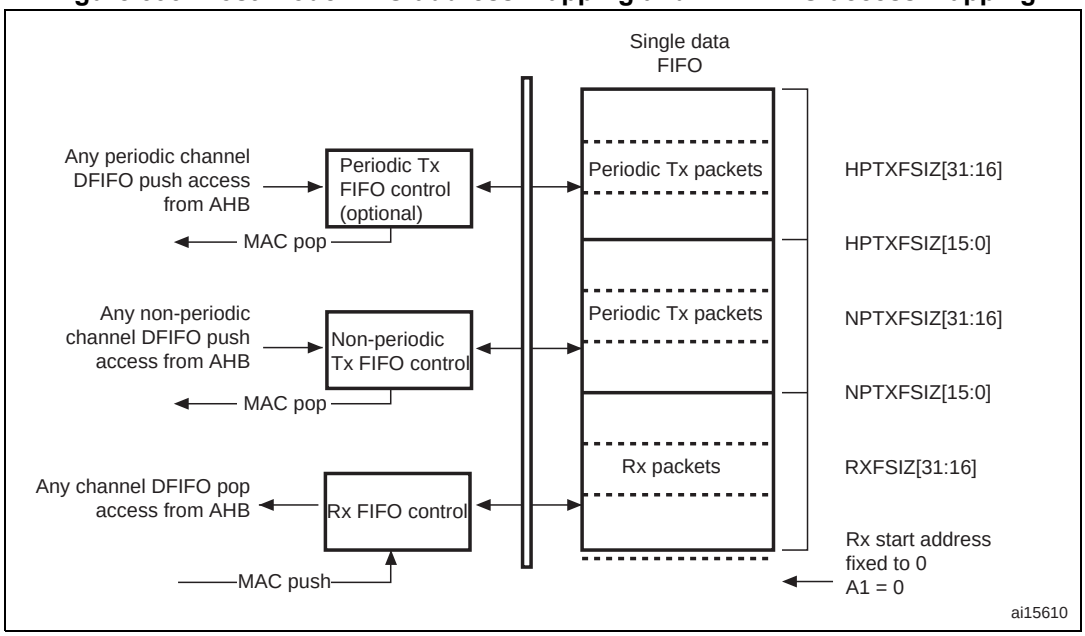

34.12.1 Host Rx FIFO

The host uses one receiver FIFO for all periodic and nonperiodic transactions. The FIFO is used as a receive buffer to hold the received data (payload of the received packet) from the USB until it is transferred to the system memory. Packets received from any remote IN endpoint are stacked back-to-back until free space is available. The status of each received packet with the host channel destination, byte count, data PID and validity of the received data are also stored into the FIFO. The size of the receive FIFO is configured in the receive FIFO size register (GRXFSIZ).

The single receive FIFO architecture makes it highly efficient for the USB host to fill in the receive data buffer:

- All IN configured host channels share the same RAM buffer (shared FIFO)
- The OTG FS core can fill in the receive FIFO up to the limit for any sequence of IN tokens driven by the host software

The application receives the Rx FIFO not-empty interrupt as long as there is at least one packet available for download. It reads the packet information from the receive status read and pop register and finally pops the data off the receive FIFO.

34.12.2 Host Tx FIFOs

The host uses one transmit FIFO for all non-periodic (control and bulk) OUT transactions and one transmit FIFO for all periodic (isochronous and interrupt) OUT transactions. FIFOs are used as transmit buffers to hold the data (payload of the transmit packet) to be transmitted over the USB. The size of the periodic (nonperiodic) Tx FIFO is configured in the host periodic (nonperiodic) transmit FIFO size (HPTXFSIZ/HNPTXFSIZ) register.

The two Tx FIFO implementation derives from the higher priority granted to the periodic type of traffic over the USB frame. At the beginning of each frame, the built-in host scheduler processes the periodic request queue first, followed by the nonperiodic request queue.

The two transmit FIFO architecture provides the USB host with separate optimization for periodic and nonperiodic transmit data buffer management:

- All host channels configured to support periodic (nonperiodic) transactions in the OUT direction share the same RAM buffer (shared FIFOs)
- The OTG FS core can fill in the periodic (nonperiodic) transmit FIFO up to the limit for any sequence of OUT tokens driven by the host software

The OTG_FS core issues the periodic Tx FIFO empty interrupt (PTXFE bit in OTG_FS_GINTSTS) as long as the periodic Tx-FIFO is half or completely empty, depending on the value of the periodic Tx-FIFO empty level bit in the AHB configuration register (PTXFELVL bit in OTG_FS_GAHBCFG). The application can push the transmission data in advance as long as free space is available in both the periodic Tx FIFO and the periodic request queue. The host periodic transmit FIFO and queue status register (HPTXSTS) can be read to know how much space is available in both.

OTG_FS core issues the non periodic Tx FIFO empty interrupt (NPTXFE bit in OTG_FS_GINTSTS) as long as the nonperiodic Tx FIFO is half or completely empty depending on the non periodic Tx FIFO empty level bit in the AHB configuration register (TXFELVL bit in OTG_FS_GAHBCFG). The application can push the transmission data as long as free space is available in both the nonperiodic Tx FIFO and nonperiodic request queue. The host nonperiodic transmit FIFO and queue status register (HNPTXSTS) can be read to know how much space is available in both.

34.13 FIFO RAM allocation

34.13.1 Device mode

Receive FIFO RAM allocation: the application should allocate RAM for SETUP Packets: 10 locations must be reserved in the receive FIFO to receive SETUP packets on control endpoint. The core does not use these locations, which are reserved for SETUP packets, to write any other data. One location is to be allocated for Global OUT NAK. Status information is written to the FIFO along with each received packet. Therefore, a minimum space of (Largest Packet Size / 4) + 1 must be allocated to receive packets. If multiple isochronous endpoints are enabled, then at least two (Largest Packet Size / 4) + 1 spaces must be allocated to receive back-to-back packets. Typically, two (Largest Packet Size / 4) + 1 spaces are recommended so that when the previous packet is being transferred to the CPU, the USB can receive the subsequent packet.

Along with the last packet for each endpoint, transfer complete status information is also pushed to the FIFO. Typically, one location for each OUT endpoint is recommended.

Transmit FIFO RAM allocation: the minimum RAM space required for each IN Endpoint Transmit FIFO is the maximum packet size for that particular IN endpoint.

Note: More space allocated in the transmit IN Endpoint FIFO results in better performance on the USB.

34.13.2 Host mode

Receive FIFO RAM allocation

Status information is written to the FIFO along with each received packet. Therefore, a minimum space of (Largest Packet Size / 4) + 1 must be allocated to receive packets. If multiple isochronous channels are enabled, then at least two (Largest Packet Size / 4) + 1 spaces must be allocated to receive back-to-back packets. Typically, two (Largest Packet Size / 4) + 1 spaces are recommended so that when the previous packet is being transferred to the CPU, the USB can receive the subsequent packet.

Along with the last packet in the host channel, transfer complete status information is also pushed to the FIFO. So one location must be allocated for this.

Transmit FIFO RAM allocation

The minimum amount of RAM required for the host Non-periodic Transmit FIFO is the largest maximum packet size among all supported non-periodic OUT channels.

Typically, two Largest Packet Sizes worth of space is recommended, so that when the current packet is under transfer to the USB, the CPU can get the next packet.

The minimum amount of RAM required for host periodic Transmit FIFO is the largest maximum packet size out of all the supported periodic OUT channels. If there is at least one Isochronous OUT endpoint, then the space must be at least two times the maximum packet size of that channel.

Note: More space allocated in the Transmit Non-periodic FIFO results in better performance on the USB.

34.14 USB system performance

Best USB and system performance is achieved owing to the large RAM buffers, the highly configurable FIFO sizes, the quick 32-bit FIFO access through AHB push/pop registers and, especially, the advanced FIFO control mechanism. Indeed, this mechanism allows the OTG_FS to fill in the available RAM space at best regardless of the current USB sequence. With these features:

- The application gains good margins to calibrate its intervention in order to optimize the CPU bandwidth usage:
  - It can accumulate large amounts of transmission data in advance compared to when they are effectively sent over the USB
  - It benefits of a large time margin to download data from the single receive FIFO
- The USB Core is able to maintain its full operating rate, that is to provide maximum full-speed bandwidth with a great margin of autonomy versus application intervention:
  - It has a large reserve of transmission data at its disposal to autonomously manage the sending of data over the USB

– It has a lot of empty space available in the receive buffer to autonomously fill it in with the data coming from the USB

As the OTG_FS core is able to fill in the 1.25 Kbyte RAM buffer very efficiently, and as 1.25 Kbyte of transmit/receive data is more than enough to cover a full speed frame, the USB system is able to withstand the maximum full-speed data rate for up to one USB frame (1 ms) without any CPU intervention.

34.15 OTG_FS interrupts

When the OTG_FS controller is operating in one mode, either device or host, the application must not access registers from the other mode. If an illegal access occurs, a mode mismatch interrupt is generated and reflected in the Core interrupt register (MMIS bit in the OTG_FS_GINTSTS register). When the core switches from one mode to the other, the registers in the new mode of operation must be reprogrammed as they would be after a power-on reset.

Figure 394 shows the interrupt hierarchy.

Figure 394. Interrupt hierarchy

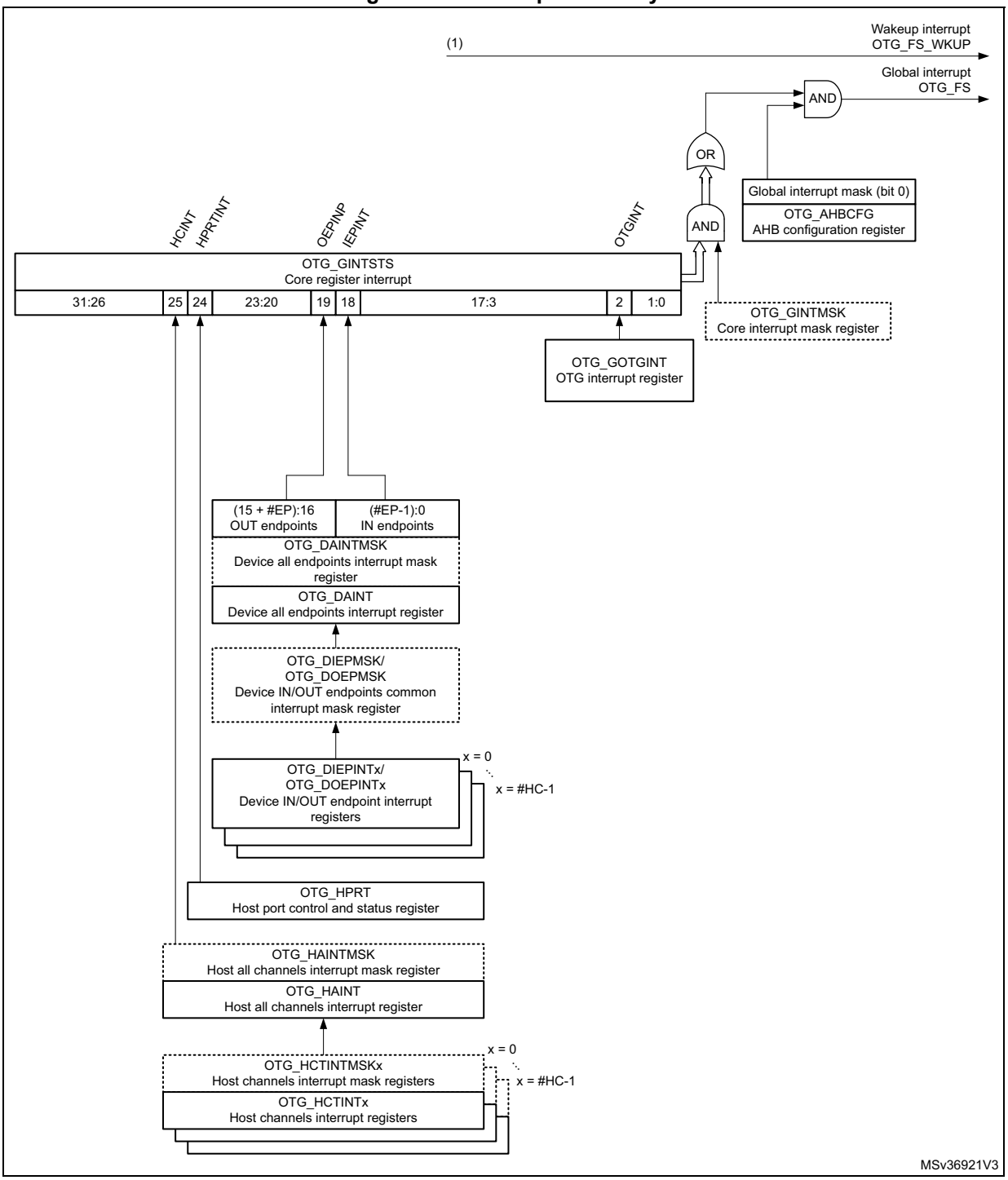

1. OTG_FS_WKUP become active (high state) when resume condition occurs during L1 SLEEP or L2 SUSPEND states.

34.16 OTG_FS control and status registers

By reading from and writing to the control and status registers (CSRs) through the AHB slave interface, the application controls the OTG_FS controller. These registers are 32 bits wide, and the addresses are 32-bit block aligned. The OTG_FS registers must be accessed by words (32 bits).

CSRs are classified as follows:

- Core global registers
- Host-mode registers
- Host global registers
- Host port CSRs
- Host channel-specific registers
- Device-mode registers
- Device global registers
- Device endpoint-specific registers
- Power and clock-gating registers
- Data FIFO (DFIFO) access registers

Only the Core global, Power and clock-gating, Data FIFO access, and host port control and status registers can be accessed in both host and device modes. When the OTG_FS controller is operating in one mode, either device or host, the application must not access registers from the other mode. If an illegal access occurs, a mode mismatch interrupt is generated and reflected in the Core interrupt register (MMIS bit in the OTG_FS_GINTSTS register). When the core switches from one mode to the other, the registers in the new mode of operation must be reprogrammed as they would be after a power-on reset.

34.16.1 CSR memory map

The host and device mode registers occupy different addresses. All registers are implemented in the AHB clock domain.

Figure 395. CSR memory map

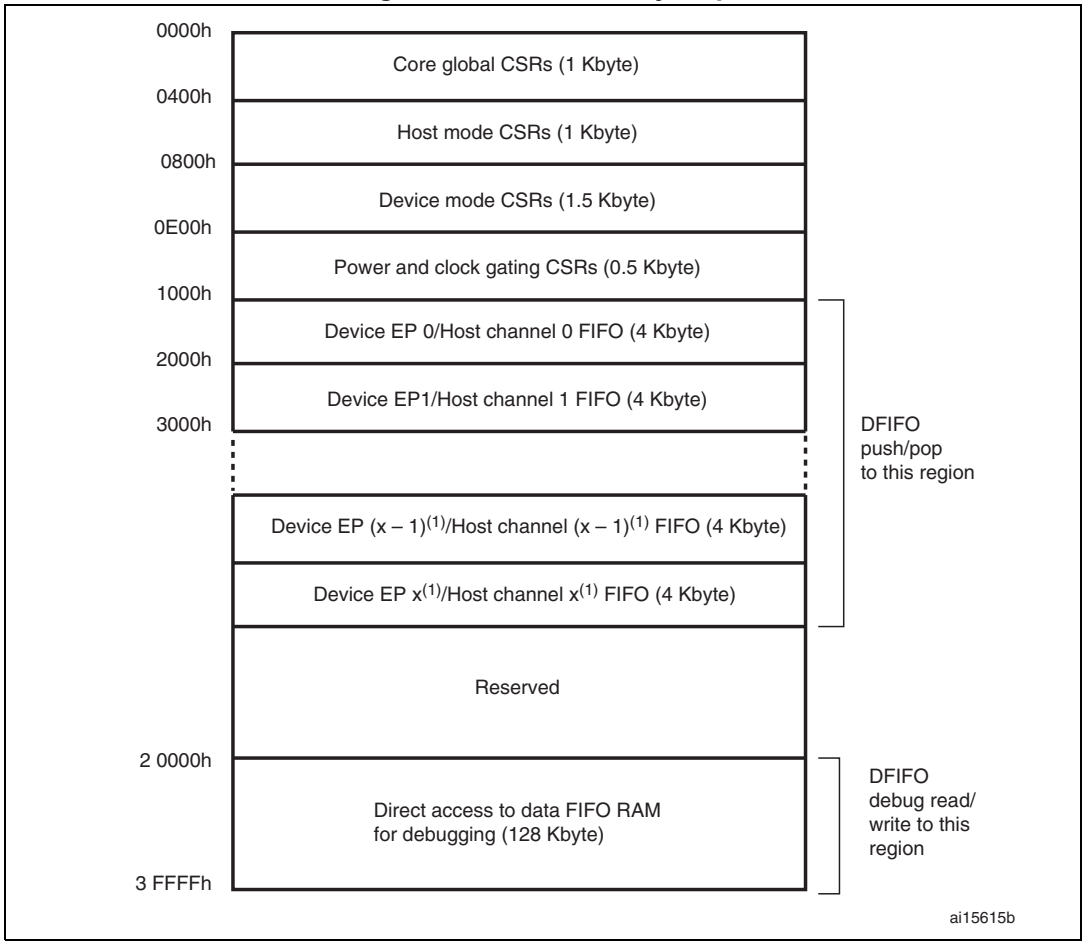

1. x = 3 in device mode and x = 7 in host mode.

Global CSR map

These registers are available in both host and device modes.

Table 198. Core global control and status registers (CSRs)

Acronym	Address offset	Register name
OTG_FS_GOTGCTL	0x000	*OTG_FS control and status register (OTG_FS_GOTGCTL) on page 1271*
OTG_FS_GOTGINT	0x004	*OTG_FS interrupt register (OTG_FS_GOTGINT) on page 1272*
OTG_FS_GAHBCFG	0x008	*OTG_FS AHB configuration register (OTG_FS_GAHBCFG) on page 1274*
OTG_FS_GUSBCFG	0x00C	*OTG_FS USB configuration register (OTG_FS_GUSBCFG) on page 1275*
OTG_FS_GRSTCTL	0x010	*OTG_FS reset register (OTG_FS_GRSTCTL) on page 1277*

Table 198. Core global control and status registers (CSRs) (continued)

Acronym	Address offset	Register name
OTG_FS_GINTSTS	0x014	*OTG_FS core interrupt register (OTG_FS_GINTSTS) on page 1279*
OTG_FS_GINTMSK	0x018	*OTG_FS interrupt mask register (OTG_FS_GINTMSK) on page 1283*
OTG_FS_GRXSTSR	0x01C	*OTG_FS Receive status debug read/OTG status read and pop registers (OTG_FS_GRXSTSR/OTG_FS_GRXSTSP) on page 1286*
OTG_FS_GRXSTSP	0x020	
OTG_FS_GRXFSIZ	0x024	*OTG_FS Receive FIFO size register (OTG_FS_GRXFSIZ) on page 1287*
OTG_FS_HNPTXFSIZ/ OTG_FS_DIEPTXF0(1)	0x028	*OTG_FS Host non-periodic transmit FIFO size register (OTG_FS_HNPTXFSIZ)/Endpoint 0 Transmit FIFO size (OTG_FS_DIEPTXF0)*
OTG_FS_HNPTXSTS	0x02C	*OTG_FS non-periodic transmit FIFO/queue status register (OTG_FS_HNPTXSTS) on page 1288*
OTG_FS_GCCFG	0x038	*OTG_FS general core configuration register (OTG_FS_GCCFG) on page 1289*
OTG_FS_CID	0x03C	*OTG_FS core ID register (OTG_FS_CID) on page 1290*
OTG_FS_HPTXFSIZ	0x100	*OTG_FS Host periodic transmit FIFO size register (OTG_FS_HPTXFSIZ) on page 1291*
OTG_FS_DIEPTXFx	0x104 0x108 0x10C	*OTG_FS device IN endpoint transmit FIFO size register (OTG_FS_DIEPTXFx) (x = 1..3, where x is the FIFO_number) on page 1291*

1. The general rule is to use OTG_FS_HNPTXFSIZ for host mode and OTG_FS_DIEPTXF0 for device mode.

Host-mode CSR map

These registers must be programmed every time the core changes to host mode.

Table 199. Host-mode control and status registers (CSRs)

Acronym	Offset address	Register name
OTG_FS_HCFG	0x400	*OTG_FS Host configuration register (OTG_FS_HCFG) on page 1292*
OTG_FS_HFIR	0x404	*OTG_FS Host frame interval register (OTG_FS_HFIR) on page 1292*
OTG_FS_HFNUM	0x408	*OTG_FS Host frame number/frame time remaining register (OTG_FS_HFNUM) on page 1293*
OTG_FS_HPTXSTS	0x410	*OTG_FS_Host periodic transmit FIFO/queue status register (OTG_FS_HPTXSTS) on page 1293*
OTG_FS_HAINT	0x414	*OTG_FS Host all channels interrupt register (OTG_FS_HAINT) on page 1294*
OTG_FS_HAINTMSK	0x418	*OTG_FS Host all channels interrupt mask register (OTG_FS_HAINTMSK) on page 1295*

Table 199. Host-mode control and status registers (CSRs) (continued)

Acronym	Offset address	Register name
OTG_FS_HPRT	0x440	*OTG_FS Host port control and status register (OTG_FS_HPRT) on page 1295*
OTG_FS_HCCHARx	0x500 0x520 ... 0x5E0	*OTG_FS Host channel-x characteristics register (OTG_FS_HCCHARx) (x = 0..7, where x = Channel_number) on page 1298*
OTG_FS_HCINTx	0x508	*OTG_FS Host channel-x interrupt register (OTG_FS_HCINTx) (x = 0..7, where x = Channel_number) on page 1299*
OTG_FS_HCINTMSKx	0x50C	*OTG_FS Host channel-x interrupt mask register (OTG_FS_HCINTMSKx) (x = 0..7, where x = Channel_number) on page 1300*
OTG_FS_HCTSIZx	0x510	*OTG_FS Host channel-x transfer size register (OTG_FS_HCTSIZx) (x = 0..7, where x = Channel_number) on page 1301*

Device-mode CSR map

These registers must be programmed every time the core changes to device mode.

Table 200. Device-mode control and status registers

Acronym	Offset address	Register name
OTG_FS_DCFG	0x800	*OTG_FS device configuration register (OTG_FS_DCFG) on page 1302*
OTG_FS_DCTL	0x804	*OTG_FS device control register (OTG_FS_DCTL) on page 1303*
OTG_FS_DSTS	0x808	*OTG_FS device status register (OTG_FS_DSTS) on page 1304*
OTG_FS_DIEPMSK	0x810	*OTG_FS device IN endpoint common interrupt mask register (OTG_FS_DIEPMSK) on page 1305*
OTG_FS_DOEPMSK	0x814	*OTG_FS device OUT endpoint common interrupt mask register (OTG_FS_DOEPMSK) on page 1306*
OTG_FS_DAINT	0x818	*OTG_FS device all endpoints interrupt register (OTG_FS_DAINT) on page 1307*
OTG_FS_DAINTMSK	0x81C	*OTG_FS all endpoints interrupt mask register (OTG_FS_DAINTMSK) on page 1308*
OTG_FS_DVBUSDIS	0x828	*OTG_FS device V_{BUS} discharge time register (OTG_FS_DVBUSDIS) on page 1308*
OTG_FS_DVBUSPULSE	0x82C	*OTG_FS device V_{BUS} pulsing time register (OTG_FS_DVBUSPULSE) on page 1308*
OTG_FS_DIEPEMPMSK	0x834	*OTG_FS device IN endpoint FIFO empty interrupt mask register: (OTG_FS_DIEPEMPMSK) on page 1309*
OTG_FS_DIEPCTL0	0x900	*OTG_FS device control IN endpoint 0 control register (OTG_FS_DIEPCTL0) on page 1309*

Table 200. Device-mode control and status registers (continued)

Acronym	Offset address	Register name
OTG_FS_DIEPCTLx	0x920 0x940 0x960	*OTG device endpoint x control register (OTG_FS_DIEPCTLx) (x = 1..3, where x = Endpoint_number) on page 1311*
OTG_FS_DIEPINTx	0x908	*OTG_FS device endpoint-x interrupt register (OTG_FS_DIEPINTx) (x = 0..3, where x = Endpoint_number) on page 1318*
OTG_FS_DIEPTSIZ0	0x910	*OTG_FS device IN endpoint 0 transfer size register (OTG_FS_DIEPTSIZ0) on page 1320*
OTG_FS_DTXFSTSx	0x918	*OTG_FS device IN endpoint transmit FIFO status register (OTG_FS_DTXFSTSx) (x = 0..3, where x = Endpoint_number) on page 1324*
OTG_FS_DIEPTSIZx	0x930 0x950 0x970	*OTG_FS device OUT endpoint-x transfer size register (OTG_FS_DOEPTSIZx) (x = 1..3, where x = Endpoint_number) on page 1324*
OTG_FS_DOEPCTL0	0xB00	*OTG_FS device control OUT endpoint 0 control register (OTG_FS_DOEPCTL0) on page 1314*
OTG_FS_DOEPCTLx	0xB20 0xB40 0xB60	*OTG device endpoint x control register (OTG_FS_DIEPCTLx) (x = 1..3, where x = Endpoint_number) on page 1311*
OTG_FS_DOEPINTx	0xB08	*OTG_FS device endpoint-x interrupt register (OTG_FS_DOEPINTx) (x = 0..3, where x = Endpoint_number) on page 1319*
OTG_FS_DOEPTSIZ0	0xB10	*OTG_FS device OUT endpoint 0 transfer size register (OTG_FS_DOEPTSIZ0) on page 1322*
OTG_FS_DOEPTSIZx	0xB30 0xB50 0xB70	*OTG_FS device OUT endpoint-x transfer size register (OTG_FS_DOEPTSIZx) (x = 1..3, where x = Endpoint_number) on page 1324*

Data FIFO (DFIFO) access register map

These registers, available in both host and device modes, are used to read or write the FIFO space for a specific endpoint or a channel, in a given direction. If a host channel is of type IN, the FIFO can only be read on the channel. Similarly, if a host channel is of type OUT, the FIFO can only be written on the channel.

Table 201. Data FIFO (DFIFO) access register map

FIFO access register section	Address range	Access
Device IN Endpoint 0/Host OUT Channel 0: DFIFO Write Access Device OUT Endpoint 0/Host IN Channel 0: DFIFO Read Access	0x1000–0x1FFC	w r
Device IN Endpoint 1/Host OUT Channel 1: DFIFO Write Access Device OUT Endpoint 1/Host IN Channel 1: DFIFO Read Access	0x2000–0x2FFC	w r

Table 201. Data FIFO (DFIFO) access register map (continued)

FIFO access register section	Address range	Access
...	...	...
Device IN Endpoint x(1)/Host OUT Channel x(1): DFIFO Write Access Device OUT Endpoint x(1)/Host IN Channel x(1): DFIFO Read Access	0xX000–0xXFFC	w r

1. Where x is 3 in device mode and 7 in host mode.

Power and clock gating CSR map

There is a single register for power and clock gating. It is available in both host and device modes.

Table 202. Power and clock gating control and status registers

Register name	Acronym	Offset address: 0xE00–0xFFF
Power and clock gating control register	OTG_FS_PCGCCTL	0xE00-0xE04
Reserved	-	0xE05–0xFFF

34.16.2 OTG_FS global registers

These registers are available in both host and device modes, and do not need to be reprogrammed when switching between these modes.

Bit values in the register descriptions are expressed in binary unless otherwise specified.

OTG_FS control and status register (OTG_FS_GOTGCTL)

Address offset: 0x000

Reset value: 0x0001 0000

The OTG_FS_GOTGCTL register controls the behavior and reflects the status of the OTG function of the core.

31	30	29	28	27	26	25	24	23	22	21	20	19	18	17	16	15	14	13	12	11	10	9	8	7	6	5	4	3	2	1	0
Reserved												BSVLD	ASVLD	DBCT	CIDSTS	Reserved				DHNPEN	HSHNPEN	HNPRQ	HNGSCS	Reserved						SRQ	SRQSCS
												r	r	r	r					rw	rw	rw	r							rw	r

Bits 31:20 Reserved, must be kept at reset value.

Bit 19 **BSVLD:** B-session valid

Indicates the device mode transceiver status.
0: B-session is not valid.
1: B-session is valid.
In OTG mode, you can use this bit to determine if the device is connected or disconnected.

Note: Only accessible in device mode.

Bit 18 **ASVLD:** A-session valid

Indicates the host mode transceiver status.
0: A-session is not valid
1: A-session is valid

Note: Only accessible in host mode.

Bit 17 **DBCT:** Long/short debounce time

Indicates the debounce time of a detected connection.
0: Long debounce time, used for physical connections (100 ms + 2.5 µs)
1: Short debounce time, used for soft connections (2.5 µs)

Note: Only accessible in host mode.

Bit 16 **CIDSTS:** Connector ID status

Indicates the connector ID status on a connect event.
0: The OTG_FS controller is in A-device mode
1: The OTG_FS controller is in B-device mode

Note: Accessible in both device and host modes.

Bits 15:12 Reserved, must be kept at reset value.

Bit 11 **DHNPEN:** Device HNP enabled

The application sets this bit when it successfully receives a SetFeature.SetHNPEnable command from the connected USB host.

0: HNP is not enabled in the application

1: HNP is enabled in the application

Note: Only accessible in device mode.

Bit 10 **HSHNPEN:** host set HNP enable

The application sets this bit when it has successfully enabled HNP (using the SetFeature.SetHNPEnable command) on the connected device.

0: Host Set HNP is not enabled

1: Host Set HNP is enabled

Note: Only accessible in host mode.

Bit 9 **HNPRQ:** HNP request

The application sets this bit to initiate an HNP request to the connected USB host. The application can clear this bit by writing a 0 when the host negotiation success status change bit in the OTG_FS_GOTGINT register (HNSSCHG bit in OTG_FS_GOTGINT) is set. The core clears this bit when the HNSSCHG bit is cleared.

0: No HNP request

1: HNP request

Note: Only accessible in device mode.

Bit 8 **HNGSCS:** Host negotiation success

The core sets this bit when host negotiation is successful. The core clears this bit when the HNP Request (HNPRQ) bit in this register is set.

0: Host negotiation failure

1: Host negotiation success

Note: Only accessible in device mode.

Bits 7:2 Reserved, must be kept at reset value.

Bit 1 **SRQ:** Session request

The application sets this bit to initiate a session request on the USB. The application can clear this bit by writing a 0 when the host negotiation success status change bit in the OTG_FS_GOTGINT register (HNSSCHG bit in OTG_FS_GOTGINT) is set. The core clears this bit when the HNSSCHG bit is cleared.

If you use the USB 1.1 full-speed serial transceiver interface to initiate the session request, the application must wait until V_{BUS} discharges to 0.2 V, after the B-Session Valid bit in this register (BSVLD bit in OTG_FS_GOTGCTL) is cleared.

0: No session request

1: Session request

Note: Only accessible in device mode.

Bit 0 **SRQSCS:** Session request success

The core sets this bit when a session request initiation is successful.

0: Session request failure

1: Session request success

Note: Only accessible in device mode.

OTG_FS interrupt register (OTG_FS_GOTGINT)

Address offset: 0x04

Reset value: 0x0000 0000

The application reads this register whenever there is an OTG interrupt and clears the bits in this register to clear the OTG interrupt.

31	30	29	28	27	26	25	24	23	22	21	20	19	18	17	16	15	14	13	12	11	10	9	8	7	6	5	4	3	2	1	0
Reserved												DBCDNE	ADTOCHG	HNGDET	Reserved							HNSSCHG	SRSSCHG	Reserved					SEDET	Res.	
												rc_w1	rc_w1	rc_w1								rc_w1	rc_w1						rc_w1		

Bits 31:20 Reserved, must be kept at reset value.

Bit 19 **DBCDNE:** Debounce done

The core sets this bit when the debounce is completed after the device connect. The application can start driving USB reset after seeing this interrupt. This bit is only valid when the HNP Capable or SRP Capable bit is set in the OTG_FS_GUSBCFG register (HNPCAP bit or SRPCAP bit in OTG_FS_GUSBCFG, respectively).

Note: Only accessible in host mode.

Bit 18 **ADTOCHG:** A-device timeout change

The core sets this bit to indicate that the A-device has timed out while waiting for the B-device to connect.

Note: Accessible in both device and host modes.

Bit 17 **HNGDET:** Host negotiation detected

The core sets this bit when it detects a host negotiation request on the USB.

Note: Accessible in both device and host modes.

Bits 16:10 Reserved, must be kept at reset value.

Bit 9 **HNSSCHG:** Host negotiation success status change

The core sets this bit on the success or failure of a USB host negotiation request. The application must read the host negotiation success bit of the OTG_FS_GOTGCTL register (HNGSCS in OTG_FS_GOTGCTL) to check for success or failure.

Note: Accessible in both device and host modes.

Bits 7:3 Reserved, must be kept at reset value.

Bit 8 **SRSSCHG:** Session request success status change

The core sets this bit on the success or failure of a session request. The application must read the session request success bit in the OTG_FS_GOTGCTL register (SRQSCS bit in OTG_FS_GOTGCTL) to check for success or failure.

Note: Accessible in both device and host modes.

Bit 2 **SEDET:** Session end detected

The core sets this bit to indicate that the level of the voltage on V_{BUS} is no longer valid for a B-Peripheral session when $V_{BUS} < 0.8$ V.

Bits 1:0 Reserved, must be kept at reset value.

OTG_FS AHB configuration register (OTG_FS_GAHBCFG)

Address offset: 0x008

Reset value: 0x0000 0000

This register can be used to configure the core after power-on or a change in mode. This register mainly contains AHB system-related configuration parameters. Do not change this register after the initial programming. The application must program this register before starting any transactions on either the AHB or the USB.

31	30	29	28	27	26	25	24	23	22	21	20	19	18	17	16	15	14	13	12	11	10	9	8	7	6	5	4	3	2	1	0
Reserved																							PTXFELVL	TXFELVL	Reserved						GINTMSK
																							rw	rw							rw

Bits 31:9 Reserved, must be kept at reset value.

Bit 8 **PTXFELVL:** Periodic TxFIFO empty level

Indicates when the periodic TxFIFO empty interrupt bit in the OTG_FS_GINTSTS register (PTXFE bit in OTG_FS_GINTSTS) is triggered.

0: PTXFE (in OTG_FS_GINTSTS) interrupt indicates that the Periodic TxFIFO is half empty

1: PTXFE (in OTG_FS_GINTSTS) interrupt indicates that the Periodic TxFIFO is completely empty

Note: Only accessible in host mode.

Bit 7 **TXFELVL:** TxFIFO empty level

In device mode, this bit indicates when IN endpoint Transmit FIFO empty interrupt (TXFE in OTG_FS_DIEPINTx.) is triggered.

0: the TXFE (in OTG_FS_DIEPINTx) interrupt indicates that the IN Endpoint TxFIFO is half empty

1: the TXFE (in OTG_FS_DIEPINTx) interrupt indicates that the IN Endpoint TxFIFO is completely empty

In host mode, this bit indicates when the nonperiodic Tx FIFO empty interrupt (NPTXFE bit in OTG_FS_GINTSTS) is triggered:

0: the NPTXFE (in OTG_FS_GINTSTS) interrupt indicates that the nonperiodic Tx FIFO is half empty

1: the NPTXFE (in OTG_FS_GINTSTS) interrupt indicates that the nonperiodic Tx FIFO is completely empty

Bits 6:1 Reserved, must be kept at reset value.

Bit 0 **GINTMSK:** Global interrupt mask

The application uses this bit to mask or unmask the interrupt line assertion to itself. Irrespective of this bit's setting, the interrupt status registers are updated by the core.

0: Mask the interrupt assertion to the application.

1: Unmask the interrupt assertion to the application.

Note: Accessible in both device and host modes.

OTG_FS USB configuration register (OTG_FS_GUSBCFG)

Address offset: 0x00C

Reset value: 0x0000 1440

This register can be used to configure the core after power-on or a changing to host mode or device mode. It contains USB and USB-PHY related configuration parameters. The application must program this register before starting any transactions on either the AHB or the USB. Do not make changes to this register after the initial programming.

31	30	29	28	27	26	25	24	23	22	21	20	19	18	17	16	15	14	13	12	11	10	9	8	7	6	5	4	3	2	1	0
CTXPKT	FDMOD	FHMOD	Reserved															TRDT				HNPCAP	SRPCAP	Res.	PHYSEL	Reserved			TOCAL		
rw	rw	rw																rw				rw	rw		r				rw		

Bit 31 **CTXPKT:** Corrupt Tx packet

This bit is for debug purposes only. Never set this bit to 1.

Note: Accessible in both device and host modes.

Bit 30 **FDMOD:** Force device mode

Writing a 1 to this bit forces the core to device mode irrespective of the OTG_FS_ID input pin.

0: Normal mode

1: Force device mode

After setting the force bit, the application must wait at least 25 ms before the change takes effect.

Note: Accessible in both device and host modes.

Bit 29 **FHMOD:** Force host mode

Writing a 1 to this bit forces the core to host mode irrespective of the OTG_FS_ID input pin.

0: Normal mode

1: Force host mode

After setting the force bit, the application must wait at least 25 ms before the change takes effect.

Note: Accessible in both device and host modes.

Bits 28:14 Reserved, must be kept at reset value.

Bits 13:10 **TRDT:** USB turnaround time

These bits allow setting the turnaround time in PHY clocks. They must be configured according to *Table 203: TRDT values*, depending on the application AHB frequency. Higher TRDT values allow stretching the USB response time to IN tokens in order to compensate for longer AHB read access latency to the Data FIFO.

Note: Only accessible in device mode.

Bit 9 **HNPCAP:** HNP-capable

The application uses this bit to control the OTG_FS controller's HNP capabilities.

0: HNP capability is not enabled.

1: HNP capability is enabled.

Note: Accessible in both device and host modes.

Bit 8 **SRPCAP:** SRP-capable

The application uses this bit to control the OTG_FS controller's SRP capabilities. If the core operates as a non-SRP-capable
B-device, it cannot request the connected A-device (host) to activate V_{BUS} and start a session.

0: SRP capability is not enabled.

1: SRP capability is enabled.

Note: Accessible in both device and host modes.

Bit 7 Reserved, must be kept at reset value.

Bit 6 **PHYSEL:** Full speed serial transceiver select

This bit is always 1 with read-only access.

Bits 5:3 Reserved, must be kept at reset value.

Bits 2:0 **TOCAL:** FS timeout calibration

The number of PHY clocks that the application programs in this field is added to the full-speed interpacket timeout duration in the core to account for any additional delays introduced by the PHY. This can be required, because the delay introduced by the PHY in generating the line state condition can vary from one PHY to another.

The USB standard timeout value for full-speed operation is 16 to 18 (inclusive) bit times. The application must program this field based on the speed of enumeration. The number of bit times added per PHY clock is 0.25 bit times.

Table 203. TRDT values

AHB frequency range (MHz)		TRDT minimum value
Min.	Max	
14.2	15	0xF
15	16	0xE
16	17.2	0xD
17.2	18.5	0xC
18.5	20	0xB
20	21.8	0xA
21.8	24	0x9
24	27.5	0x8
27.5	32	0x7
32	-	0x6

OTG_FS reset register (OTG_FS_GRSTCTL)

Address offset: 0x010

Reset value: 0x8000 0000

The application uses this register to reset various hardware features inside the core.

31	30	29	28	27	26	25	24	23	22	21	20	19	18	17	16	15	14	13	12	11	10	9	8	7	6	5	4	3	2	1	0
AHBIDL	Reserved																				TXFNUM					TXFFLSH	RXFFLSH	Reserved	FCRST	HSRST	CSRST
r																					rw					rs	rs		rs	rs	rs

Bit 31 **AHBIDL:** AHB master idle

Indicates that the AHB master state machine is in the Idle condition.

Note: Accessible in both device and host modes.

Bits 30:11 Reserved, must be kept at reset value.

Bits 10:6 **TXFNUM:** TxFIFO number

This is the FIFO number that must be flushed using the TxFIFO Flush bit. This field must not be changed until the core clears the TxFIFO Flush bit.

00000:

- Non-periodic TxFIFO flush in host mode
- Tx FIFO 0 flush in device mode

00001:

- Periodic TxFIFO flush in host mode
- TXFIFO 1 flush in device mode

00010: TXFIFO 2 flush in device mode

...

00101: TXFIFO 15 flush in device mode

10000: Flush all the transmit FIFOs in device or host mode.

Note: Accessible in both device and host modes.

Bit 5 **TXFFLSH:** TxFIFO flush

This bit selectively flushes a single or all transmit FIFOs, but cannot do so if the core is in the midst of a transaction.

The application must write this bit only after checking that the core is neither writing to the TxFIFO nor reading from the TxFIFO. Verify using these registers:

Read—NAK Effective Interrupt ensures the core is not reading from the FIFO

Write—AHBIDL bit in OTG_FS_GRSTCTL ensures the core is not writing anything to the FIFO.

Note: Accessible in both device and host modes.

Bit 4 **RXFFLSH:** RxFIFO flush

The application can flush the entire RxFIFO using this bit, but must first ensure that the core is not in the middle of a transaction.

The application must only write to this bit after checking that the core is neither reading from the RxFIFO nor writing to the RxFIFO.

The application must wait until the bit is cleared before performing any other operations. This bit requires 8 clocks (slowest of PHY or AHB clock) to clear.

Note: Accessible in both device and host modes.

Bit 3 Reserved, must be kept at reset value.

Bit 2 **FCRST:** Host frame counter reset

The application writes this bit to reset the frame number counter inside the core. When the frame counter is reset, the subsequent SOF sent out by the core has a frame number of 0.

Note: Only accessible in host mode.

Bit 1 **HSRST:** HCLK soft reset

The application uses this bit to flush the control logic in the AHB Clock domain. Only AHB Clock Domain pipelines are reset.

FIFOs are not flushed with this bit.

All state machines in the AHB clock domain are reset to the Idle state after terminating the transactions on the AHB, following the protocol.

CSR control bits used by the AHB clock domain state machines are cleared.

To clear this interrupt, status mask bits that control the interrupt status and are generated by the AHB clock domain state machine are cleared.

Because interrupt status bits are not cleared, the application can get the status of any core events that occurred after it set this bit.

This is a self-clearing bit that the core clears after all necessary logic is reset in the core. This can take several clocks, depending on the core's current state.

Note: Accessible in both device and host modes.

Bit 0 **CSRST:** Core soft reset

Resets the HCLK and PCLK domains as follows:

Clears the interrupts and all the CSR register bits except for the following bits:

- RSTPDMODL bit in OTG_FS_PCGCCTL
- GAYEHCLK bit in OTG_FS_PCGCCTL
- PWRCLMP bit in OTG_FS_PCGCCTL
- STPPCLK bit in OTG_FS_PCGCCTL
- FSLSPCS bit in OTG_FS_HCFG
- DSPD bit in OTG_FS_DCFG

All module state machines (except for the AHB slave unit) are reset to the Idle state, and all the transmit FIFOs and the receive FIFO are flushed.

Any transactions on the AHB Master are terminated as soon as possible, after completing the last data phase of an AHB transfer. Any transactions on the USB are terminated immediately.

The application can write to this bit any time it wants to reset the core. This is a self-clearing bit and the core clears this bit after all the necessary logic is reset in the core, which can take several clocks, depending on the current state of the core. Once this bit has been cleared, the software must wait at least 3 PHY clocks before accessing the PHY domain (synchronization delay). The software must also check that bit 31 in this register is set to 1 (AHB Master is Idle) before starting any operation.

Typically, the software reset is used during software development and also when you dynamically change the PHY selection bits in the above listed USB configuration registers. When you change the PHY, the corresponding clock for the PHY is selected and used in the PHY domain. Once a new clock is selected, the PHY domain has to be reset for proper operation.

Note: Accessible in both device and host modes.

OTG_FS core interrupt register (OTG_FS_GINTSTS)

Address offset: 0x014

Reset value: 0x0400 0020

This register interrupts the application for system-level events in the current mode (device mode or host mode).

Some of the bits in this register are valid only in host mode, while others are valid in device mode only. This register also indicates the current mode. To clear the interrupt status bits of the rc_w1 type, the application must write 1 into the bit.

The FIFO status interrupts are read-only; once software reads from or writes to the FIFO while servicing these interrupts, FIFO interrupt conditions are cleared automatically.

The application must clear the OTG_FS_GINTSTS register at initialization before unmasking the interrupt bit to avoid any interrupts generated prior to initialization.

31	30	29	28	27	26	25	24	23	22	21	20	19	18	17	16	15	14	13	12	11	10	9	8	7	6	5	4	3	2	1	0
WKUINT	SRQINT	DISCINT	CIDSCHG	Reserved	PTXFE	HCINT	HPRTINT	Reserved		IPXFR/INCOMPISOOUT	IISOIXFR	OEPINT	IEPINT	Reserved		EOPF	ISOODRP	ENUMDNE	USBRST	USBSUSP	ESUSP	Reserved		GONAKEFF	GINAKEFF	NPTXFE	RXFLVL	SOF	OTGINT	MMIS	CMOD
rc_w1					r	r	r	Res.		rc_w1		r	r			rc_w1								r	r	r	r	rc_w1	r	rc_w1	r

Bit 31 **WKUPINT:** Resume/remote wakeup detected interrupt

In device mode, this interrupt is asserted when a resume is detected on the USB. In host mode, this interrupt is asserted when a remote wakeup is detected on the USB.

Note: Accessible in both device and host modes.

Bit 30 **SRQINT:** Session request/new session detected interrupt

In host mode, this interrupt is asserted when a session request is detected from the device. In device mode, this interrupt is asserted when V_{BUS} is in the valid range for a B-peripheral device. Accessible in both device and host modes.

Bit 29 **DISCINT:** Disconnect detected interrupt

Asserted when a device disconnect is detected.

Note: Only accessible in host mode.

Bit 28 **CIDSCHG:** Connector ID status change

The core sets this bit when there is a change in connector ID status.

Note: Accessible in both device and host modes.

Bit 27 Reserved, must be kept at reset value.

Bit 26 **PTXFE:** Periodic TxFIFO empty

Asserted when the periodic transmit FIFO is either half or completely empty and there is space for at least one entry to be written in the periodic request queue. The half or completely empty status is determined by the periodic TxFIFO empty level bit in the OTG_FS_GAHBCFG register (PTXFELVL bit in OTG_FS_GAHBCFG).

Note: Only accessible in host mode.

Bit 25 **HCINT:** Host channels interrupt

The core sets this bit to indicate that an interrupt is pending on one of the channels of the core (in host mode). The application must read the OTG_FS_HAINT register to determine the exact number of the channel on which the interrupt occurred, and then read the corresponding OTG_FS_HCINTx register to determine the exact cause of the interrupt. The application must clear the appropriate status bit in the OTG_FS_HCINTx register to clear this bit.

Note: Only accessible in host mode.

Bit 24 **HPRTINT:** Host port interrupt

The core sets this bit to indicate a change in port status of one of the OTG_FS controller ports in host mode. The application must read the OTG_FS_HPRT register to determine the exact event that caused this interrupt. The application must clear the appropriate status bit in the OTG_FS_HPRT register to clear this bit.

Note: Only accessible in host mode.

Bits 23:22 Reserved, must be kept at reset value.

Bit 21 **IPXFR:** Incomplete periodic transfer

In host mode, the core sets this interrupt bit when there are incomplete periodic transactions still pending, which are scheduled for the current frame.

INCOMPISOOUT: Incomplete isochronous OUT transfer

In device mode, the core sets this interrupt to indicate that there is at least one isochronous OUT endpoint on which the transfer is not completed in the current frame. This interrupt is asserted along with the End of periodic frame interrupt (EOPF) bit in this register.

Bit 20 **IISOIXFR:** Incomplete isochronous IN transfer

The core sets this interrupt to indicate that there is at least one isochronous IN endpoint on which the transfer is not completed in the current frame. This interrupt is asserted along with the End of periodic frame interrupt (EOPF) bit in this register.

Note: Only accessible in device mode.

Bit 19 **OEPINT:** OUT endpoint interrupt

The core sets this bit to indicate that an interrupt is pending on one of the OUT endpoints of the core (in device mode). The application must read the OTG_FS_DAINT register to determine the exact number of the OUT endpoint on which the interrupt occurred, and then read the corresponding OTG_FS_DOEPINTx register to determine the exact cause of the interrupt. The application must clear the appropriate status bit in the corresponding OTG_FS_DOEPINTx register to clear this bit.

Note: Only accessible in device mode.

Bit 18 **IEPINT:** IN endpoint interrupt

The core sets this bit to indicate that an interrupt is pending on one of the IN endpoints of the core (in device mode). The application must read the OTG_FS_DAINT register to determine the exact number of the IN endpoint on which the interrupt occurred, and then read the corresponding OTG_FS_DIEPINTx register to determine the exact cause of the interrupt. The application must clear the appropriate status bit in the corresponding OTG_FS_DIEPINTx register to clear this bit.

Note: Only accessible in device mode.

Bits 17:16 Reserved, must be kept at reset value.

Bit 15 **EOPF:** End of periodic frame interrupt

Indicates that the period specified in the periodic frame interval field of the OTG_FS_DCFG register (PFIVL bit in OTG_FS_DCFG) has been reached in the current frame.

Note: Only accessible in device mode.

Bit 14 **ISOODRP:** Isochronous OUT packet dropped interrupt

The core sets this bit when it fails to write an isochronous OUT packet into the RxFIFO because the RxFIFO does not have enough space to accommodate a maximum size packet for the isochronous OUT endpoint.

Note: Only accessible in device mode.

Bit 13 **ENUMDNE:** Enumeration done

The core sets this bit to indicate that speed enumeration is complete. The application must read the OTG_FS_DSTS register to obtain the enumerated speed.

Note: Only accessible in device mode.

Bit 12 **USBRST:** USB reset

The core sets this bit to indicate that a reset is detected on the USB.

Note: Only accessible in device mode.

Bit 11 **USBSUSP:** USB suspend

The core sets this bit to indicate that a suspend was detected on the USB. The core enters the Suspended state when there is no activity on the data lines for a period of 3 ms.

Note: Only accessible in device mode.

Bit 10 **ESUSP:** Early suspend

The core sets this bit to indicate that an Idle state has been detected on the USB for 3 ms.

Note: Only accessible in device mode.

Bits 9:8 Reserved, must be kept at reset value.

Bit 7 **GONAKEFF:** Global OUT NAK effective

Indicates that the Set global OUT NAK bit in the OTG_FS_DCTL register (SGONAK bit in OTG_FS_DCTL), set by the application, has taken effect in the core. This bit can be cleared by writing the Clear global OUT NAK bit in the OTG_FS_DCTL register (CGONAK bit in OTG_FS_DCTL).

Note: Only accessible in device mode.

Bit 6 **GINAKEFF:** Global IN non-periodic NAK effective

Indicates that the Set global non-periodic IN NAK bit in the OTG_FS_DCTL register (SGINAK bit in OTG_FS_DCTL), set by the application, has taken effect in the core. That is, the core has sampled the Global IN NAK bit set by the application. This bit can be cleared by clearing the Clear global non-periodic IN NAK bit in the OTG_FS_DCTL register (CGINAK bit in OTG_FS_DCTL).

This interrupt does not necessarily mean that a NAK handshake is sent out on the USB. The STALL bit takes precedence over the NAK bit.

Note: Only accessible in device mode.

Bit 5 **NPTXFE:** Non-periodic TxFIFO empty

This interrupt is asserted when the non-periodic TxFIFO is either half or completely empty, and there is space for at least one entry to be written to the non-periodic transmit request queue. The half or completely empty status is determined by the non-periodic TxFIFO empty level bit in the OTG_FS_GAHBCFG register (TXFELVL bit in OTG_FS_GAHBCFG).

Note: Accessible in host mode only.

Bit 4 **RXFLVL:** RxFIFO non-empty

Indicates that there is at least one packet pending to be read from the RxFIFO.

Note: Accessible in both host and device modes.

Bit 3 **SOF:** Start of frame

In host mode, the core sets this bit to indicate that an SOF (FS), or Keep-Alive (LS) is transmitted on the USB. The application must write a 1 to this bit to clear the interrupt.

In device mode, in the core sets this bit to indicate that an SOF token has been received on the USB. The application can read the Device Status register to get the current frame number. This interrupt is seen only when the core is operating in FS.

Note: Accessible in both host and device modes.

Bit 2 **OTGINT:** OTG interrupt

The core sets this bit to indicate an OTG protocol event. The application must read the OTG Interrupt Status (OTG_FS_GOTGINT) register to determine the exact event that caused this interrupt. The application must clear the appropriate status bit in the OTG_FS_GOTGINT register to clear this bit.

Note: Accessible in both host and device modes.

Bit 1 **MMIS:** Mode mismatch interrupt

The core sets this bit when the application is trying to access:

- A host mode register, when the core is operating in device mode
- A device mode register, when the core is operating in host mode

The register access is completed on the AHB with an OKAY response, but is ignored by the core internally and does not affect the operation of the core.

Note: Accessible in both host and device modes.

Bit 0 **CMOD:** Current mode of operation

Indicates the current mode.

0: Device mode

1: Host mode

Note: Accessible in both host and device modes.

OTG_FS interrupt mask register (OTG_FS_GINTMSK)

Address offset: 0x018

Reset value: 0x0000 0000

This register works with the Core interrupt register to interrupt the application. When an interrupt bit is masked, the interrupt associated with that bit is not generated. However, the Core Interrupt (OTG_FS_GINTSTS) register bit corresponding to that interrupt is still set.

31	30	29	28	27	26	25	24	23	22	21	20	19	18	17	16	15	14	13	12	11	10	9	8	7	6	5	4	3	2	1	0
WUIM	SRQIM	DISCINT	CIDSCHGM	Reserved	PTXFEM	HCIM	PRTIM	Reserved		IPXFRM/IISOOXFRM	IISOIXFRM	OEPINT	IEPINT	Reserved		EOPFM	ISOODRPM	ENUMDNEM	USBRST	USBSUSPM	ESUSPM	Reserved		GONAKEFFM	GINAKEFFM	NPTXFEM	RXFLVLM	SOFM	OTGINT	MMISM	Reserved
rw	rw	rw	rw		rw	rw	rw			rw	rw	rw	rw			rw	rw	rw	rw	rw	rw			rw	rw	rw	rw	rw	rw	rw	

Bit 31 **WUIM:** Resume/remote wakeup detected interrupt mask
0: Masked interrupt
1: Unmasked interrupt
Note: Accessible in both host and device modes.

Bit 30 **SRQIM:** Session request/new session detected interrupt mask
0: Masked interrupt
1: Unmasked interrupt
Note: Accessible in both host and device modes.

Bit 29 **DISCINT:** Disconnect detected interrupt mask
0: Masked interrupt
1: Unmasked interrupt
Note: Only accessible in device mode.

Bit 28 **CIDSCHGM:** Connector ID status change mask
0: Masked interrupt
1: Unmasked interrupt
Note: Accessible in both host and device modes.

Bit 27 Reserved, must be kept at reset value.

Bit 26 **PTXFEM:** Periodic TxFIFO empty mask
0: Masked interrupt
1: Unmasked interrupt
Note: Only accessible in host mode.

Bit 25 **HCIM:** Host channels interrupt mask
0: Masked interrupt
1: Unmasked interrupt
Note: Only accessible in host mode.

Bit 24 **PRTIM:** Host port interrupt mask
0: Masked interrupt
1: Unmasked interrupt
Note: Only accessible in host mode.

Bits 23:22 Reserved, must be kept at reset value.

Bit 21 **IPXFRM:** Incomplete periodic transfer mask
0: Masked interrupt
1: Unmasked interrupt
Note: Only accessible in host mode.
IISOOXFRM: Incomplete isochronous OUT transfer mask
0: Masked interrupt
1: Unmasked interrupt
Note: Only accessible in device mode.

Bit 20 **IISOIXFRM:** Incomplete isochronous IN transfer mask
0: Masked interrupt
1: Unmasked interrupt
Note: Only accessible in device mode.

Bit 19 **OEPINT:** OUT endpoints interrupt mask
0: Masked interrupt
1: Unmasked interrupt
Note: Only accessible in device mode.

Bit 18 **IEPINT:** IN endpoints interrupt mask
0: Masked interrupt
1: Unmasked interrupt
Note: Only accessible in device mode.

Bits 17:16 Reserved, must be kept at reset value.

Bit 15 **EOPFM:** End of periodic frame interrupt mask
0: Masked interrupt
1: Unmasked interrupt
Note: Only accessible in device mode.

Bit 14 **ISOODRPM:** Isochronous OUT packet dropped interrupt mask
0: Masked interrupt
1: Unmasked interrupt
Note: Only accessible in device mode.

Bit 13 **ENUMDNEM:** Enumeration done mask
0: Masked interrupt
1: Unmasked interrupt
Note: Only accessible in device mode.

Bit 12 **USBRST:** USB reset mask
0: Masked interrupt
1: Unmasked interrupt
Note: Only accessible in device mode.

Bit 11 **USBSUSPM:** USB suspend mask
0: Masked interrupt
1: Unmasked interrupt
Note: Only accessible in device mode.

Bit 10 **ESUSPM:** Early suspend mask
0: Masked interrupt
1: Unmasked interrupt
Note: Only accessible in device mode.

Bits 9:8 Reserved, must be kept at reset value.

Bit 7 **GONAKEFFM:** Global OUT NAK effective mask
0: Masked interrupt
1: Unmasked interrupt
Note: Only accessible in device mode.

Bit 6 **GINAKEFFM:** Global non-periodic IN NAK effective mask
0: Masked interrupt
1: Unmasked interrupt
Note: Only accessible in device mode.

Bit 5 **NPTXFEM:** Non-periodic TxFIFO empty mask
0: Masked interrupt
1: Unmasked interrupt
Note: Only accessible in Host mode.

Bit 4 **RXFLVLM:** Receive FIFO non-empty mask
0: Masked interrupt
1: Unmasked interrupt
Note: Accessible in both device and host modes.

Bit 3 **SOFM:** Start of frame mask
0: Masked interrupt
1: Unmasked interrupt
Note: Accessible in both device and host modes.

Bit 2 **OTGINT:** OTG interrupt mask
0: Masked interrupt
1: Unmasked interrupt
Note: Accessible in both device and host modes.

Bit 1 **MMISM:** Mode mismatch interrupt mask
0: Masked interrupt
1: Unmasked interrupt
Note: Accessible in both device and host modes.

Bit 0 Reserved, must be kept at reset value.

OTG_FS Receive status debug read/OTG status read and pop registers (OTG_FS_GRXSTSR/OTG_FS_GRXSTSP)

Address offset for Read: 0x01C

Address offset for Pop: 0x020

Reset value: 0x0000 0000

A read to the Receive status debug read register returns the contents of the top of the Receive FIFO. A read to the Receive status read and pop register additionally pops the top data entry out of the RxFIFO.

The receive status contents must be interpreted differently in host and device modes. The core ignores the receive status pop/read when the receive FIFO is empty and returns a value of 0x0000 0000. The application must only pop the Receive Status FIFO when the Receive FIFO non-empty bit of the Core interrupt register (RXFLVL bit in OTG_FS_GINTSTS) is asserted.

Host mode

31	30	29	28	27	26	25	24	23	22	21	20	19	18	17	16	15	14	13	12	11	10	9	8	7	6	5	4	3	2	1	0
Reserved											PKTSTS				DPID		BCNT											CHNUM			
											r				r		r											r			

Bits 31:21 Reserved, must be kept at reset value.

Bits 20:17 **PKTSTS:** Packet status

Indicates the status of the received packet

0010: IN data packet received
0011: IN transfer completed (triggers an interrupt)
0101: Data toggle error (triggers an interrupt)
0111: Channel halted (triggers an interrupt)
Others: Reserved

Bits 16:15 **DPID:** Data PID

Indicates the Data PID of the received packet

00: DATA0
10: DATA1
01: DATA2
11: MDATA

Bits 14:4 **BCNT:** Byte count

Indicates the byte count of the received IN data packet.

Bits 3:0 **CHNUM:** Channel number

Indicates the channel number to which the current received packet belongs.

Device mode

31 30 29 28 27 26 25	24 23 22 21	20 19 18 17	16	15 14 13 12 11 10 9 8 7 6 5 4	3 2 1 0
Reserved	FRMNUM	PKTSTS	DPID	BCNT	EPNUM
	r	r	r	r	r

Bits 31:25 Reserved, must be kept at reset value.

Bits 24:21 **FRMNUM:** Frame number

This is the least significant 4 bits of the frame number in which the packet is received on the USB. This field is supported only when isochronous OUT endpoints are supported.

Bits 20:17 **PKTSTS:** Packet status

Indicates the status of the received packet
0001: Global OUT NAK (triggers an interrupt)
0010: OUT data packet received
0011: OUT transfer completed (triggers an interrupt)
0100: SETUP transaction completed (triggers an interrupt)
0110: SETUP data packet received
Others: Reserved

Bits 16:15 **DPID:** Data PID

Indicates the Data PID of the received OUT data packet
00: DATA0
10: DATA1
01: DATA2
11: MDATA

Bits 14:4 **BCNT:** Byte count

Indicates the byte count of the received data packet.

Bits 3:0 **EPNUM:** Endpoint number

Indicates the endpoint number to which the current received packet belongs.

OTG_FS Receive FIFO size register (OTG_FS_GRXFSIZ)

Address offset: 0x024

Reset value: 0x0000 0200

The application can program the RAM size that must be allocated to the RxFIFO.

31 30 29 28 27 26 25 24 23 22 21 20 19 18 17	16	15 14 13 12 11 10 9 8 7 6 5 4 3 2 1 0
Reserved	RXFD	
	rw	

Bits 31:16 Reserved, must be kept at reset value.

Bits 15:0 **RXFD:** RxFIFO depth

This value is in terms of 32-bit words.
Minimum value is 16
Maximum value is 256
The power-on reset value of this register is specified as the largest Rx data FIFO depth.

OTG_FS Host non-periodic transmit FIFO size register (OTG_FS_HNPTXFSIZ)/Endpoint 0 Transmit FIFO size (OTG_FS_DIEPTXF0)

Address offset: 0x028

Reset value: 0x0000 0200

31	30	29	28	27	26	25	24	23	22	21	20	19	18	17	16	15	14	13	12	11	10	9	8	7	6	5	4	3	2	1	0
NPTXFD/TX0FD																NPTXFSA/TX0FSA															
rw																rw															

Host mode

Bits 31:16 **NPTXFD:** Non-periodic TxFIFO depth
This value is in terms of 32-bit words.
Minimum value is 16
Maximum value is 256

Bits 15:0 **NPTXFSA:** Non-periodic transmit RAM start address
This field contains the memory start address for non-periodic transmit FIFO RAM.

Device mode

Bits 31:16 **TX0FD:** Endpoint 0 TxFIFO depth
This value is in terms of 32-bit words.
Minimum value is 16
Maximum value is 256

Bits 15:0 **TX0FSA:** Endpoint 0 transmit RAM start address
This field contains the memory start address for the endpoint 0 transmit FIFO RAM.

OTG_FS non-periodic transmit FIFO/queue status register (OTG_FS_HNPTXSTS)

Address offset: 0x02C

Reset value: 0x0008 0200

Note: In Device mode, this register is not valid.

This read-only register contains the free space information for the non-periodic TxFIFO and the non-periodic transmit request queue.

31	30	29	28	27	26	25	24	23	22	21	20	19	18	17	16	15	14	13	12	11	10	9	8	7	6	5	4	3	2	1	0
Reserved	NPTXQTOP							NPTQXSAV								NPTXFSAV															
	r							r								r															

Bit 31 Reserved, must be kept at reset value.

Bits 30:24 **NPTXQTOP:** Top of the non-periodic transmit request queue

Entry in the non-periodic Tx request queue that is currently being processed by the MAC.
Bits 30:27: Channel/endpoint number
Bits 26:25:

- 00: IN/OUT token
- 01: Zero-length transmit packet (device IN/host OUT)
- 11: Channel halt command

Bit 24: Terminate (last entry for selected channel/endpoint)

Bits 23:16 **NPTQXSAV:** Non-periodic transmit request queue space available

Indicates the amount of free space available in the non-periodic transmit request queue. This queue holds both IN and OUT requests in host mode. Device mode has only IN requests.
00: Non-periodic transmit request queue is full
01: 1 location available
10: 2 locations available
bxn: n locations available (0 ≤ n ≤ 8)
Others: Reserved

Bits 15:0 **NPTXFSAV:** Non-periodic TxFIFO space available

Indicates the amount of free space available in the non-periodic TxFIFO.
Values are in terms of 32-bit words.
00: Non-periodic TxFIFO is full
01: 1 word available
10: 2 words available
0xn: *n* words available (where 0 ≤ n ≤ 256)
Others: Reserved

OTG_FS general core configuration register (OTG_FS_GCCFG)

Address offset: 0x038

Reset value: 0x0000 XXXX

31	30	29	28	27	26	25	24	23	22	21	20	19	18	17	16	15	14	13	12	11	10	9	8	7	6	5	4	3	2	1	0
Reserved										NOVBUSSENS	SOFOUTEN	VBUSBSEN	VBUSASEN	Reserved	.PWRDWN	Reserved															
										rw	rw	rw	rw		rw																

Bits 31:22 Reserved, must be kept at reset value.

Bit 21 **NOVBUSSENS**: V_{BUS} sensing disable option

When this bit is set, V_{BUS} is considered internally to be always at V_{BUS} valid level (5 V). This option removes the need for a dedicated V_{BUS} pad, and leave this pad free to be used for other purposes such as a shared functionality. V_{BUS} connection can be remapped on another general purpose input pad and monitored by software.

This option is only suitable for host-only or device-only applications.

0: V_{BUS} sensing available by hardware

1: V_{BUS} sensing not available by hardware.

Bit 20 **SOFOUTEN:** SOF output enable

0: SOF pulse not available on PAD (OTG_FS_SOF)

1: SOF pulse available on PAD (OTG_FS_SOF)

Bit 19 **VBUSBSEN:** Enable the V_{BUS} sensing “B” device

0: V_{BUS} sensing “B” disabled

1: V_{BUS} sensing “B” enabled

Bit 18 **VBUSASEN:** Enable the V_{BUS} sensing “A” device

0: V_{BUS} sensing “A” disabled

1: V_{BUS} sensing “A” enabled

Bit 17 Reserved, must be kept at reset value.

Bit 16 **PWRDWN:** Power down

Used to activate the transceiver in transmission/reception

0: Power down active

1: Power down deactivated (“Transceiver active”)

Bits 15:0 Reserved, must be kept at reset value.

OTG_FS core ID register (OTG_FS_CID)

Address offset: 0x03C

Reset value:0x0000 1200

This is a register containing the Product ID as reset value.

31	30	29	28	27	26	25	24	23	22	21	20	19	18	17	16	15	14	13	12	11	10	9	8	7	6	5	4	3	2	1	0
PRODUCT_ID																															
rw	rw	rw	rw	rw	rw	rw	rw	rw	rw	rw	rw	rw	rw	rw	rw	rw	rw	rw	rw	rw	rw	rw	rw	rw	rw	rw	rw	rw	rw	rw	rw

Bits 31:0 **PRODUCT_ID:** Product ID field

Application-programmable ID field.

OTG_FS Host periodic transmit FIFO size register (OTG_FS_HPTXFSIZ)

Address offset: 0x100

Reset value: 0x0200 0400

31	30	29	28	27	26	25	24	23	22	21	20	19	18	17	16	15	14	13	12	11	10	9	8	7	6	5	4	3	2	1	0
PTXFSIZ																PTXSA															
r	r	r	r	r	r	r	r	r	r	r	r	r	r	r	r	r	r	r	r	r	r	r	r	r	r	r	r	r	r	r	r

Bits 31:16 **PTXFD:** Host periodic TxFIFO depth

This value is in terms of 32-bit words.

Minimum value is 16

Bits 15:0 **PTXSA:** Host periodic TxFIFO start address

The power-on reset value of this register is the sum of the largest Rx data FIFO depth and largest non-periodic Tx data FIFO depth.

OTG_FS device IN endpoint transmit FIFO size register (OTG_FS_DIEPTXFx) (x = 1..3, where x is the FIFO_number)

Address offset: 0x104 + 0x04 * (x -1)

Reset value: 0x0200 0200

31	30	29	28	27	26	25	24	23	22	21	20	19	18	17	16	15	14	13	12	11	10	9	8	7	6	5	4	3	2	1	0
INEPTXFD																INEPTXSA															
r	r	r	r	r	r	r	r	r	r	r	r	r	r	r	r	r	r	r	r	r	r	r	r	r	r	r	r	r	r	r	r

Bits 31:16 **INEPTXFD:** IN endpoint TxFIFO depth

This value is in terms of 32-bit words.

Minimum value is 16

The power-on reset value of this register is specified as the largest IN endpoint FIFO number depth.

Bits 15:0 **INEPTXSA:** IN endpoint FIFOx transmit RAM start address

This field contains the memory start address for IN endpoint transmit FIFOx. The address must be aligned with a 32-bit memory location.

34.16.3 Host-mode registers

Bit values in the register descriptions are expressed in binary unless otherwise specified.

Host-mode registers affect the operation of the core in the host mode. Host mode registers must not be accessed in device mode, as the results are undefined. Host mode registers can be categorized as follows:

OTG_FS Host configuration register (OTG_FS_HCFG)

Address offset: 0x400

Reset value: 0x0000 0000

This register configures the core after power-on. Do not make changes to this register after initializing the host.

31	30	29	28	27	26	25	24	23	22	21	20	19	18	17	16	15	14	13	12	11	10	9	8	7	6	5	4	3	2	1	0
Reserved																													FSLSS	FSLSPCS	
																													r	rw	rw

Bits 31:3 Reserved, must be kept at reset value.

Bit 2 **FSLSS:** FS- and LS-only support

The application uses this bit to control the core's enumeration speed. Using this bit, the application can make the core enumerate as an FS host, even if the connected device supports HS traffic. Do not make changes to this field after initial programming.

1: FS/LS-only, even if the connected device can support HS (read-only)

Bits 1:0 **FSLSPCS:** FS/LS PHY clock select

When the core is in FS host mode

01: PHY clock is running at 48 MHz

Others: Reserved

When the core is in LS host mode

00: Reserved

01: Select 48 MHz PHY clock frequency

10: Select 6 MHz PHY clock frequency

11: Reserved

Note: The FSLSPCS must be set on a connection event according to the speed of the connected device (after changing this bit, a software reset must be performed).

OTG_FS Host frame interval register (OTG_FS_HFIR)

Address offset: 0x404

Reset value: 0x0000 EA60

This register stores the frame interval information for the current speed to which the OTG_FS controller has enumerated.

31	30	29	28	27	26	25	24	23	22	21	20	19	18	17	16	15	14	13	12	11	10	9	8	7	6	5	4	3	2	1	0
Reserved																FRIVL															
																rw	rw	rw	rw	rw	rw	rw	rw	rw	rw	rw	rw	rw	rw	rw	rw

Bits 31:16 Reserved, must be kept at reset value.

Bits 15:0 **FRIVL:** Frame interval

The value that the application programs to this field specifies the interval between two consecutive SOFs (FS) or Keep-Alive tokens (LS). This field contains the number of PHY clocks that constitute the required frame interval. The application can write a value to this register only after the Port enable bit of the host port control and status register (PENA bit in OTG_FS_HPRT) has been set. If no value is programmed, the core calculates the value based on the PHY clock specified in the FS/LS PHY Clock Select field of the host configuration register (FSLSPCS in OTG_FS_HCFG). Do not change the value of this field after the initial configuration.

– Frame interval = 1 ms × (FRIVL - 1)

OTG_FS Host frame number/frame time remaining register (OTG_FS_HFNUM)

Address offset: 0x408

Reset value: 0x0000 3FFF

This register indicates the current frame number. It also indicates the time remaining (in terms of the number of PHY clocks) in the current frame.

31	30	29	28	27	26	25	24	23	22	21	20	19	18	17	16	15	14	13	12	11	10	9	8	7	6	5	4	3	2	1	0
FTREM																FRNUM															
r	r	r	r	r	r	r	r	r	r	r	r	r	r	r	r	r	r	r	r	r	r	r	r	r	r	r	r	r	r	r	r

Bits 31:16 **FTREM:** Frame time remaining

Indicates the amount of time remaining in the current frame, in terms of PHY clocks. This field decrements on each PHY clock. When it reaches zero, this field is reloaded with the value in the Frame interval register and a new SOF is transmitted on the USB.

Bits 15:0 **FRNUM:** Frame number

This field increments when a new SOF is transmitted on the USB, and is cleared to 0 when it reaches 0x3FFF.

OTG_FS_Host periodic transmit FIFO/queue status register (OTG_FS_HPTXSTS)

Address offset: 0x410

Reset value: 0x0008 0100

This read-only register contains the free space information for the periodic TxFIFO and the periodic transmit request queue.

31	30	29	28	27	26	25	24	23	22	21	20	19	18	17	16	15	14	13	12	11	10	9	8	7	6	5	4	3	2	1	0
PTXQTOP								PTXQSAV								PTXFSAVL															
r	r	r	r	r	r	r	r	r	r	r	r	r	r	r	r	r	r	r	r	r	r	r	r	r	r	r	r	r	r	r	r

Bits 31:24 **PTXQTOP:** Top of the periodic transmit request queue

This indicates the entry in the periodic Tx request queue that is currently being processed by the MAC.

This register is used for debugging.

Bit 31: Odd/Even frame

- 0: send in even frame
- 1: send in odd frame

Bits 30:27: Channel/endpoint number

Bits 26:25: Type

- 00: IN/OUT
- 01: Zero-length packet
- 11: Disable channel command

Bit 24: Terminate (last entry for the selected channel/endpoint)

Bits 23:16 **PTXQSAV:** Periodic transmit request queue space available

Indicates the number of free locations available to be written in the periodic transmit request queue. This queue holds both IN and OUT requests.

00: Periodic transmit request queue is full

01: 1 location available

10: 2 locations available

bxn: n locations available (0 ≤ n ≤ 8)

Others: Reserved

Bits 15:0 **PTXFSAVL:** Periodic transmit data FIFO space available

Indicates the number of free locations available to be written to in the periodic TxFIFO.

Values are in terms of 32-bit words

0000: Periodic TxFIFO is full

0001: 1 word available

0010: 2 words available

bxn: n words available (where 0 ≤ n ≤ PTXFD)

Others: Reserved

OTG_FS Host all channels interrupt register (OTG_FS_HAINT)

Address offset: 0x414

Reset value: 0x0000 000

When a significant event occurs on a channel, the host all channels interrupt register interrupts the application using the host channels interrupt bit of the Core interrupt register (HCINT bit in OTG_FS_GINTSTS). This is shown in *Figure 394*. There is one interrupt bit per channel, up to a maximum of 16 bits. Bits in this register are set and cleared when the application sets and clears bits in the corresponding host channel-x interrupt register.

31	30	29	28	27	26	25	24	23	22	21	20	19	18	17	16	15	14	13	12	11	10	9	8	7	6	5	4	3	2	1	0
Reserved																HAINT															
																r	r	r	r	r	r	r	r	r	r	r	r	r	r	r	r

Bits 31:16 Reserved, must be kept at reset value.

Bits 15:0 **HAINT:** Channel interrupts

One bit per channel: Bit 0 for Channel 0, bit 15 for Channel 15

OTG_FS Host all channels interrupt mask register (OTG_FS_HAINTMSK)

Address offset: 0x418

Reset value: 0x0000 0000

The host all channel interrupt mask register works with the host all channel interrupt register to interrupt the application when an event occurs on a channel. There is one interrupt mask bit per channel, up to a maximum of 16 bits.

31	30	29	28	27	26	25	24	23	22	21	20	19	18	17	16	15	14	13	12	11	10	9	8	7	6	5	4	3	2	1	0
Reserved																HAINTM															
																rw	rw	rw	rw	rw	rw	rw	rw	rw	rw	rw	rw	rw	rw	rw	rw

Bits 31:16 Reserved, must be kept at reset value.

Bits 15:0 **HAINTM:** Channel interrupt mask
0: Masked interrupt
1: Unmasked interrupt
One bit per channel: Bit 0 for channel 0, bit 15 for channel 15

OTG_FS Host port control and status register (OTG_FS_HPRT)

Address offset: 0x440

Reset value: 0x0000 0000

This register is available only in host mode. Currently, the OTG host supports only one port.

A single register holds USB port-related information such as USB reset, enable, suspend, resume, connect status, and test mode for each port. It is shown in *Figure 394*. The rc_w1 bits in this register can trigger an interrupt to the application through the host port interrupt bit of the core interrupt register (HPRTINT bit in OTG_FS_GINTSTS). On a Port Interrupt, the application must read this register and clear the bit that caused the interrupt. For the rc_w1 bits, the application must write a 1 to the bit to clear the interrupt.

31	30	29	28	27	26	25	24	23	22	21	20	19	18	17	16	15	14	13	12	11	10	9	8	7	6	5	4	3	2	1	0
Reserved													PSPD		PTCTL				PPWR	PLSTS		Reserved	PRST	PSUSP	PRES	POCCHNG	POCA	PENCHNG	PENA	PCDET	PCSTS
													r	r	rw	rw	rw	rw	rw	r	r		rw	rs	rw	rc_w1	r	rc_w1	rc_w0	rc_w1	r

Bits 31:19 Reserved, must be kept at reset value.

Bits 18:17 **PSPD:** Port speed
Indicates the speed of the device attached to this port.
01: Full speed
10: Low speed
11: Reserved

Bits 16:13 **PTCTL:** Port test control

The application writes a nonzero value to this field to put the port into a Test mode, and the corresponding pattern is signaled on the port.

0000: Test mode disabled
0001: Test_J mode
0010: Test_K mode
0011: Test_SE0_NAK mode
0100: Test_Packet mode
0101: Test_Force_Enable
Others: Reserved

Bit 12 **PPWR:** Port power

The application uses this field to control power to this port, and the core clears this bit on an overcurrent condition.

0: Power off
1: Power on

Bits 11:10 **PLSTS:** Port line status

Indicates the current logic level USB data lines
Bit 10: Logic level of OTG_FS_DP
Bit 11: Logic level of OTG_FS_DM

Bit 9 Reserved, must be kept at reset value.

Bit 8 **PRST:** Port reset

When the application sets this bit, a reset sequence is started on this port. The application must time the reset period and clear this bit after the reset sequence is complete.

0: Port not in reset
1: Port in reset

The application must leave this bit set for a minimum duration of at least 10 ms to start a reset on the port. The application can leave it set for another 10 ms in addition to the required minimum duration, before clearing the bit, even though there is no maximum limit set by the USB standard.

Bit 7 **PSUSP:** Port suspend

The application sets this bit to put this port in Suspend mode. The core only stops sending SOFs when this is set. To stop the PHY clock, the application must set the Port clock stop bit, which asserts the suspend input pin of the PHY.

The read value of this bit reflects the current suspend status of the port. This bit is cleared by the core after a remote wakeup signal is detected or the application sets the Port reset bit or Port resume bit in this register or the Resume/remote wakeup detected interrupt bit or Disconnect detected interrupt bit in the Core interrupt register (WKUINT or DISCINT in OTG_FS_GINTSTS, respectively).

0: Port not in Suspend mode
1: Port in Suspend mode

Bit 6 **PRES:** Port resume

The application sets this bit to drive resume signaling on the port. The core continues to drive the resume signal until the application clears this bit.

If the core detects a USB remote wakeup sequence, as indicated by the Port resume/remote wakeup detected interrupt bit of the Core interrupt register (WKUINT bit in OTG_FS_GINTSTS), the core starts driving resume signaling without application intervention and clears this bit when it detects a disconnect condition. The read value of this bit indicates whether the core is currently driving resume signaling.

0: No resume driven
1: Resume driven

Bit 5 **POCCHNG:** Port overcurrent change

The core sets this bit when the status of the Port overcurrent active bit (bit 4) in this register changes.

Bit 4 **POCA:** Port overcurrent active

Indicates the overcurrent condition of the port.

0: No overcurrent condition

1: Overcurrent condition

Bit 3 **PENCHNG:** Port enable/disable change

The core sets this bit when the status of the Port enable bit 2 in this register changes.

Bit 2 **PENA:** Port enable

A port is enabled only by the core after a reset sequence, and is disabled by an overcurrent condition, a disconnect condition, or by the application clearing this bit. The application cannot set this bit by a register write. It can only clear it to disable the port. This bit does not trigger any interrupt to the application.

0: Port disabled

1: Port enabled

Bit 1 **PCDET:** Port connect detected

The core sets this bit when a device connection is detected to trigger an interrupt to the application using the host port interrupt bit in the Core interrupt register (HPRTINT bit in OTG_FS_GINTSTS). The application must write a 1 to this bit to clear the interrupt.

Bit 0 **PCSTS:** Port connect status

0: No device is attached to the port

1: A device is attached to the port

OTG_FS Host channel-x characteristics register (OTG_FS_HCCHARx) (x = 0..7, where x = Channel_number)

Address offset: 0x500 + 0x20 * x

Reset value: 0x0000 0000

31	30	29	28	27	26	25	24	23	22	21	20	19	18	17	16	15	14	13	12	11	10	9	8	7	6	5	4	3	2	1	0
CHENA	CHDIS	ODDFRM	DAD							MCNT		EPTYP		LSDEV	Reserved	EPDIR	EPNUM				MPSIZ										
rs	rs	rw	rw	rw	rw	rw	rw	rw	rw	rw	rw	rw	rw	rw		rw	rw	rw	rw	rw	rw	rw	rw	rw	rw	rw	rw	rw	rw	rw	rw

Bit 31 **CHENA:** Channel enable

This field is set by the application and cleared by the OTG host.
0: Channel disabled
1: Channel enabled

Bit 30 **CHDIS:** Channel disable

The application sets this bit to stop transmitting/receiving data on a channel, even before the transfer for that channel is complete. The application must wait for the Channel disabled interrupt before treating the channel as disabled.

Bit 29 **ODDFRM:** Odd frame

This field is set (reset) by the application to indicate that the OTG host must perform a transfer in an odd frame. This field is applicable for only periodic (isochronous and interrupt) transactions.
0: Even frame
1: Odd frame

Bits 28:22 **DAD:** Device address

This field selects the specific device serving as the data source or sink.

Bits 21:20 **MCNT:** Multicount

This field indicates to the host the number of transactions that must be executed per frame for this periodic endpoint. For non-periodic transfers, this field is not used
00: Reserved. This field yields undefined results
01: 1 transaction
10: 2 transactions per frame to be issued for this endpoint
11: 3 transactions per frame to be issued for this endpoint

Note: This field must be set to at least 01.

Bits 19:18 **EPTYP:** Endpoint type

Indicates the transfer type selected.
00: Control
01: Isochronous
10: Bulk
11: Interrupt

Bit 17 **LSDEV:** Low-speed device

This field is set by the application to indicate that this channel is communicating to a low-speed device.

Bit 16 Reserved, must be kept at reset value.

Bit 15 **EPDIR:** Endpoint direction
Indicates whether the transaction is IN or OUT.
0: OUT
1: IN

Bits 14:11 **EPNUM:** Endpoint number
Indicates the endpoint number on the device serving as the data source or sink.

Bits 10:0 **MPSIZ:** Maximum packet size
Indicates the maximum packet size of the associated endpoint.

OTG_FS Host channel-x interrupt register (OTG_FS_HCINTx) (x = 0..7, where x = Channel_number)

Address offset: 0x508 + 0x20 * x

Reset value: 0x0000 0000

This register indicates the status of a channel with respect to USB- and AHB-related events. It is shown in *Figure 394*. The application must read this register when the host channels interrupt bit in the Core interrupt register (HCINT bit in OTG_FS_GINTSTS) is set. Before the application can read this register, it must first read the host all channels interrupt (OTG_FS_HAINT) register to get the exact channel number for the host channel-x interrupt register. The application must clear the appropriate bit in this register to clear the corresponding bits in the OTG_FS_HAINT and OTG_FS_GINTSTS registers.

31	30	29	28	27	26	25	24	23	22	21	20	19	18	17	16	15	14	13	12	11	10	9	8	7	6	5	4	3	2	1	0
Reserved																					DTERR	FRMOR	BBERR	TXERR	Reserved	ACK	NAK	STALL	Reserved	CHH	XFRC
																					rc_w1	rc_w1	rc_w1	rc_w1		rc_w1	rc_w1	rc_w1		rc_w1	rc_w1

Bits 31:11 Reserved, must be kept at reset value.

Bit 10 **DTERR:** Data toggle error

Bit 9 **FRMOR:** Frame overrun

Bit 8 **BBERR:** Babble error

Bit 7 **TXERR:** Transaction error
Indicates one of the following errors occurred on the USB.
CRC check failure
Timeout
Bit stuff error
False EOP

Bit 6 Reserved, must be kept at reset value.

Bit 5 **ACK:** ACK response received/transmitted interrupt

Bit 4 **NAK:** NAK response received interrupt

Bit 3 **STALL:** STALL response received interrupt

Bit 2 Reserved, must be kept at reset value.

Bit 1 **CHH:** Channel halted

Indicates the transfer completed abnormally either because of any USB transaction error or in response to disable request by the application.

Bit 0 **XFRC:** Transfer completed

Transfer completed normally without any errors.

OTG_FS Host channel-x interrupt mask register (OTG_FS_HCINTMSKx) (x = 0..7, where x = Channel_number)

Address offset: 0x50C + 0x20 * x

Reset value: 0x0000 0000

This register reflects the mask for each channel status described in the previous section.

31	30	29	28	27	26	25	24	23	22	21	20	19	18	17	16	15	14	13	12	11	10	9	8	7	6	5	4	3	2	1	0
Reserved																					DTERRM	FRMORM	BBERRM	TXERRM	Reserved	ACKM	NAKM	STALLM	Reserved	CHHM	XFRCM
																					rw	rw	rw	rw		rw	rw	rw		rw	rw

Bits 31:11 Reserved, must be kept at reset value.

Bit 10 **DTERRM:** Data toggle error mask
0: Masked interrupt
1: Unmasked interrupt

Bit 9 **FRMORM:** Frame overrun mask
0: Masked interrupt
1: Unmasked interrupt

Bit 8 **BBERRM:** Babble error mask
0: Masked interrupt
1: Unmasked interrupt

Bit 7 **TXERRM:** Transaction error mask
0: Masked interrupt
1: Unmasked interrupt

Bit 6 Reserved, must be kept at reset value.

Bit 5 **ACKM:** ACK response received/transmitted interrupt mask
0: Masked interrupt
1: Unmasked interrupt

Bit 4 **NAKM:** NAK response received interrupt mask
0: Masked interrupt
1: Unmasked interrupt

Bit 3 **STALLM:** STALL response received interrupt mask
0: Masked interrupt
1: Unmasked interrupt

Bit 2 Reserved, must be kept at reset value.

Bit 1 **CHHM:** Channel halted mask
0: Masked interrupt
1: Unmasked interrupt

Bit 0 **XFRCM:** Transfer completed mask
0: Masked interrupt
1: Unmasked interrupt

OTG_FS Host channel-x transfer size register (OTG_FS_HCTSIZx) (x = 0..7, where x = Channel_number)

Address offset: 0x510 + 0x20 * x

Reset value: 0x0000 0000

31	30	29	28	27	26	25	24	23	22	21	20	19	18	17	16	15	14	13	12	11	10	9	8	7	6	5	4	3	2	1	0
Reserved	DPID		PKTCNT										XFRSIZ																		
rw	rw	rw	rw	rw	rw	rw	rw	rw	rw	rw	rw	rw	rw	rw	rw	rw	rw	rw	rw	rw	rw	rw	rw	rw	rw	rw	rw	rw	rw	rw	rw

Bit 31 Reserved, must be kept at reset value.

Bits 30:29 **DPID:** Data PID
The application programs this field with the type of PID to use for the initial transaction. The host maintains this field for the rest of the transfer.
00: DATA0
01: DATA2
10: DATA1
11: MDATA (non-control)/SETUP (control)

Bits 28:19 **PKTCNT:** Packet count
This field is programmed by the application with the expected number of packets to be transmitted (OUT) or received (IN).
The host decrements this count on every successful transmission or reception of an OUT/IN packet. Once this count reaches zero, the application is interrupted to indicate normal completion.

Bits 18:0 **XFRSIZ:** Transfer size
For an OUT, this field is the number of data bytes the host sends during the transfer.
For an IN, this field is the buffer size that the application has reserved for the transfer. The application is expected to program this field as an integer multiple of the maximum packet size for IN transactions (periodic and non-periodic).

34.16.4 Device-mode registers

OTG_FS device configuration register (OTG_FS_DCFG)

Address offset: 0x800

Reset value: 0x0220 0000

This register configures the core in device mode after power-on or after certain control commands or enumeration. Do not make changes to this register after initial programming.

31	30	29	28	27	26	25	24	23	22	21	20	19	18	17	16	15	14	13	12	11	10	9	8	7	6	5	4	3	2	1	0
Reserved																			PFIVL		DAD							Reserved	NZLSOHSK	DSPD	
																			rw		rw	rw	rw	rw	rw	rw	rw		rw	rw	rw

Bits 31:13 Reserved, must be kept at reset value.

Bits 12:11 **PFIVL:** Periodic frame interval

Indicates the time within a frame at which the application must be notified using the end of periodic frame interrupt. This can be used to determine if all the isochronous traffic for that frame is complete.

00: 80% of the frame interval

01: 85% of the frame interval

10: 90% of the frame interval

11: 95% of the frame interval

Bits 10:4 **DAD:** Device address

The application must program this field after every SetAddress control command.

Bit 3 Reserved, must be kept at reset value.

Bit 2 **NZLSOHSK:** Non-zero-length status OUT handshake

The application can use this field to select the handshake the core sends on receiving a nonzero-length data packet during the OUT transaction of a control transfer's Status stage.

1: Send a STALL handshake on a nonzero-length status OUT transaction and do not send the received OUT packet to the application.

0: Send the received OUT packet to the application (zero-length or nonzero-length) and send a handshake based on the NAK and STALL bits for the endpoint in the Device endpoint control register.

Bits 1:0 **DSPD:** Device speed

Indicates the speed at which the application requires the core to enumerate, or the maximum speed the application can support. However, the actual bus speed is determined only after the chirp sequence is completed, and is based on the speed of the USB host to which the core is connected.

00: Reserved

01: Reserved

10: Reserved

11: Full speed (USB 1.1 transceiver clock is 48 MHz)

OTG_FS device control register (OTG_FS_DCTL)

Address offset: 0x804

Reset value: 0x0000 0000

31	30	29	28	27	26	25	24	23	22	21	20	19	18	17	16	15	14	13	12	11	10	9	8	7	6	5	4	3	2	1	0
Reserved																				POPRGDNE	CGONAK	SGONAK	CGINAK	SGINAK	TCTL			GONSTS	GINSTS	SDIS	RWUSIG
																				rw	w	w	w	w	rw	rw	rw	r	r	rw	rw

Bits 31:12 Reserved, must be kept at reset value.

Bit 11 **POPRGDNE:** Power-on programming done

The application uses this bit to indicate that register programming is completed after a wakeup from power down mode.

Bit 10 **CGONAK:** Clear global OUT NAK

Writing 1 to this field clears the Global OUT NAK.

Bit 9 **SGONAK:** Set global OUT NAK

Writing 1 to this field sets the Global OUT NAK.
The application uses this bit to send a NAK handshake on all OUT endpoints.
The application must set the this bit only after making sure that the Global OUT NAK effective bit in the Core interrupt register (GONAKEFF bit in OTG_FS_GINTSTS) is cleared.

Bit 8 **CGINAK:** Clear global IN NAK

Writing 1 to this field clears the Global IN NAK.

Bit 7 **SGINAK:** Set global IN NAK

Writing 1 to this field sets the Global non-periodic IN NAK. The application uses this bit to send a NAK handshake on all non-periodic IN endpoints.
The application must set this bit only after making sure that the Global IN NAK effective bit in the Core interrupt register (GINAKEFF bit in OTG_FS_GINTSTS) is cleared.

Bits 6:4 **TCTL:** Test control

000: Test mode disabled
001: Test_J mode
010: Test_K mode
011: Test_SE0_NAK mode
100: Test_Packet mode
101: Test_Force_Enable
Others: Reserved

Bit 3 **GONSTS:** Global OUT NAK status

0: A handshake is sent based on the FIFO Status and the NAK and STALL bit settings.
1: No data is written to the RxFIFO, irrespective of space availability. Sends a NAK handshake on all packets, except on SETUP transactions. All isochronous OUT packets are dropped.

Bit 2 **GINSTS:** Global IN NAK status

0: A handshake is sent out based on the data availability in the transmit FIFO.
1: A NAK handshake is sent out on all non-periodic IN endpoints, irrespective of the data availability in the transmit FIFO.

Bit 1 **SDIS:** Soft disconnect

The application uses this bit to signal the USB OTG core to perform a soft disconnect. As long as this bit is set, the host does not see that the device is connected, and the device does not receive signals on the USB. The core stays in the disconnected state until the application clears this bit.
0: Normal operation. When this bit is cleared after a soft disconnect, the core generates a device connect event to the USB host. When the device is reconnected, the USB host restarts device enumeration.
1: The core generates a device disconnect event to the USB host.

Bit 0 **RWUSIG:** Remote wakeup signaling

When the application sets this bit, the core initiates remote signaling to wake up the USB host. The application must set this bit to instruct the core to exit the Suspend state. As specified in the USB 2.0 specification, the application must clear this bit 1 ms to 15 ms after setting it.

Table 204 contains the minimum duration (according to device state) for which the Soft disconnect (SDIS) bit must be set for the USB host to detect a device disconnect. To accommodate clock jitter, it is recommended that the application add some extra delay to the specified minimum duration.

Table 204. Minimum duration for soft disconnect

Operating speed	Device state	Minimum duration
Full speed	Suspended	1 ms + 2.5 µs
Full speed	Idle	2.5 µs
Full speed	Not Idle or Suspended (Performing transactions)	2.5 µs

OTG_FS device status register (OTG_FS_DSTS)

Address offset: 0x808

Reset value: 0x0000 0010

This register indicates the status of the core with respect to USB-related events. It must be read on interrupts from the device all interrupts (OTG_FS_DAINT) register.

31	30	29	28	27	26	25	24	23	22	21	20	19	18	17	16	15	14	13	12	11	10	9	8	7	6	5	4	3	2	1	0
Reserved										FNSOF														Reserved				EERR	ENUMSPD		SUSPSTS
										r	r	r	r	r	r	r	r	r	r	r	r	r	r					r	r	r	r

Bits 31:22 Reserved, must be kept at reset value.

Bits 21:8 **FNSOF:** Frame number of the received SOF

Bits 7:4 Reserved, must be kept at reset value.

Bit 3 **EERR:** Erratic error

The core sets this bit to report any erratic errors.

Due to erratic errors, the OTG_FS controller goes into Suspended state and an interrupt is generated to the application with Early suspend bit of the OTG_FS_GINTSTS register (ESUSP bit in OTG_FS_GINTSTS). If the early suspend is asserted due to an erratic error, the application can only perform a soft disconnect recover.

Bits 2:1 **ENUMSPD:** Enumerated speed

Indicates the speed at which the OTG_FS controller has come up after speed detection through a chirp sequence.

01: Reserved

10: Reserved

11: Full speed (PHY clock is running at 48 MHz)

Others: reserved

Bit 0 **SUSPSTS:** Suspend status

In device mode, this bit is set as long as a Suspend condition is detected on the USB. The core enters the Suspended state when there is no activity on the USB data lines for a period of 3 ms. The core comes out of the suspend:

– When there is an activity on the USB data lines

– When the application writes to the Remote wakeup signaling bit in the OTG_FS_DCTL register (RWUSIG bit in OTG_FS_DCTL).

OTG_FS device IN endpoint common interrupt mask register (OTG_FS_DIEPMSK)

Address offset: 0x810

Reset value: 0x0000 0000

This register works with each of the OTG_FS_DIEPINTx registers for all endpoints to generate an interrupt per IN endpoint. The IN endpoint interrupt for a specific status in the OTG_FS_DIEPINTx register can be masked by writing to the corresponding bit in this register. Status bits are masked by default.

31	30	29	28	27	26	25	24	23	22	21	20	19	18	17	16	15	14	13	12	11	10	9	8	7	6	5	4	3	2	1	0
Reserved																		NAKM	Reserved						INEPNEM	INEPNMM	ITTXFEMSK	TOM	Reserved	EPDM	XFRCM
																		rw							rw	rw	rw	rw		rw	rw

Bits 31:14 Reserved, must be kept at reset value.

Bit 13 **NAKM:** NAK interrupt mask

0: Masked interrupt

1: Unmasked interrupt

Bits 12:7 Reserved, must be kept at reset value.

Bit 6 **INEPNEM:** IN endpoint NAK effective mask

0: Masked interrupt

1: Unmasked interrupt

Bit 5 **INEPNMM:** IN token received with EP mismatch mask
0: Masked interrupt
1: Unmasked interrupt

Bit 4 **ITTXFEMSK:** IN token received when TxFIFO empty mask
0: Masked interrupt
1: Unmasked interrupt

Bit 3 **TOM:** Timeout condition mask (Non-isochronous endpoints)
0: Masked interrupt
1: Unmasked interrupt

Bit 2 Reserved, must be kept at reset value.

Bit 1 **EPDM:** Endpoint disabled interrupt mask
0: Masked interrupt
1: Unmasked interrupt

Bit 0 **XFRCM:** Transfer completed interrupt mask
0: Masked interrupt
1: Unmasked interrupt

OTG_FS device OUT endpoint common interrupt mask register (OTG_FS_DOEPMSK)

Address offset: 0x814

Reset value: 0x0000 0000

This register works with each of the OTG_FS_DOEPINTx registers for all endpoints to generate an interrupt per OUT endpoint. The OUT endpoint interrupt for a specific status in the OTG_FS_DOEPINTx register can be masked by writing into the corresponding bit in this register. Status bits are masked by default.

31	30	29	28	27	26	25	24	23	22	21	20	19	18	17	16	15	14	13	12	11	10	9	8	7	6	5	4	3	2	1	0
Reserved																		NAK	BERRM	Reserved			OUTPKTERRM	Reserved		STSPHSRXM	OTEPDM	STUPM	Reserved	EPDM	XFRCM
																		rw	rw				rw			rw	rw	rw		rw	rw

Bits 31:14 Reserved, must be kept at reset value.

Bit 13 **NAKMSK**: NAK interrupt mask
0: Masked interrupt
1: Unmasked interrupt

Bit 12 **BERRM**: Babble error interrupt mask
0: Masked interrupt
1: Unmasked interrupt

Bits 11:9 Reserved, must be kept at reset value.

Bit 8 **OUTPKTERRM**: Out packet error mask
0: Masked interrupt
1: Unmasked interrupt

Bits 7:6 Reserved, must be kept at reset value.

Bit 5 **STSPHSRXM:** Status phase received for control write mask
0: Masked interrupt
1: Unmasked interrupt

Bit 4 **OTEPDM:** OUT token received when endpoint disabled mask
Applies to control OUT endpoints only.
0: Masked interrupt
1: Unmasked interrupt

Bit 3 **STUPM:** SETUP phase done mask
Applies to control endpoints only.
0: Masked interrupt
1: Unmasked interrupt

Bit 2 Reserved, must be kept at reset value.

Bit 1 **EPDM:** Endpoint disabled interrupt mask
0: Masked interrupt
1: Unmasked interrupt

Bit 0 **XFRCM:** Transfer completed interrupt mask
0: Masked interrupt
1: Unmasked interrupt

OTG_FS device all endpoints interrupt register (OTG_FS_DAINT)

Address offset: 0x818

Reset value: 0x0000 0000

When a significant event occurs on an endpoint, a OTG_FS_DAINT register interrupts the application using the Device OUT endpoints interrupt bit or Device IN endpoints interrupt bit of the OTG_FS_GINTSTS register (OEPINT or IEPINT in OTG_FS_GINTSTS, respectively). There is one interrupt bit per endpoint, up to a maximum of 16 bits for OUT endpoints and 16 bits for IN endpoints. For a bidirectional endpoint, the corresponding IN and OUT interrupt bits are used. Bits in this register are set and cleared when the application sets and clears bits in the corresponding Device Endpoint-x interrupt register (OTG_FS_DIEPINTx/OTG_FS_DOEPINTx).

31	30	29	28	27	26	25	24	23	22	21	20	19	18	17	16	15	14	13	12	11	10	9	8	7	6	5	4	3	2	1	0
OEPINT																IEPINT															
r	r	r	r	r	r	r	r	r	r	r	r	r	r	r	r	r	r	r	r	r	r	r	r	r	r	r	r	r	r	r	r

Bits 31:16 **OEPINT:** OUT endpoint interrupt bits
One bit per OUT endpoint:
Bit 16 for OUT endpoint 0, bit 19 for OUT endpoint 3.

Bits 15:0 **IEPINT:** IN endpoint interrupt bits
One bit per IN endpoint:
Bit 0 for IN endpoint 0, bit 3 for endpoint 3.

OTG_FS all endpoints interrupt mask register (OTG_FS_DAINTMSK)

Address offset: 0x81C

Reset value: 0x0000 0000

The OTG_FS_DAINTMSK register works with the Device endpoint interrupt register to interrupt the application when an event occurs on a device endpoint. However, the OTG_FS_DAINT register bit corresponding to that interrupt is still set.

31	30	29	28	27	26	25	24	23	22	21	20	19	18	17	16	15	14	13	12	11	10	9	8	7	6	5	4	3	2	1	0
OEPM																IEPM															
rw	rw	rw	rw	rw	rw	rw	rw	rw	rw	rw	rw	rw	rw	rw	rw	rw	rw	rw	rw	rw	rw	rw	rw	rw	rw	rw	rw	rw	rw	rw	rw

Bits 31:16 **OEPM:** OUT EP interrupt mask bits
One per OUT endpoint:
Bit 16 for OUT EP 0, bit 19 for OUT EP 3
0: Masked interrupt
1: Unmasked interrupt

Bits 15:0 **IEPM:** IN EP interrupt mask bits
One bit per IN endpoint:
Bit 0 for IN EP 0, bit 3 for IN EP 3
0: Masked interrupt
1: Unmasked interrupt

OTG_FS device V_{BUS} discharge time register (OTG_FS_DVBUSDIS)

Address offset: 0x0828

Reset value: 0x0000 17D7

This register specifies the V_{BUS} discharge time after V_{BUS} pulsing during SRP.

31	30	29	28	27	26	25	24	23	22	21	20	19	18	17	16	15	14	13	12	11	10	9	8	7	6	5	4	3	2	1	0
Reserved																VBUSDT															
																rw	rw	rw	rw	rw	rw	rw	rw	rw	rw	rw	rw	rw	rw	rw	rw

Bits 31:16 Reserved, must be kept at reset value.

Bits 15:0 **VBUSDT:** Device V_{BUS} discharge time
Specifies the V_{BUS} discharge time after V_{BUS} pulsing during SRP. This value equals:
V_{BUS} discharge time in PHY clocks / 1 024
Depending on your V_{BUS} load, this value may need adjusting.

OTG_FS device V_{BUS} pulsing time register (OTG_FS_DVBUSPULSE)

Address offset: 0x082C

Reset value: 0x0000 05B8

This register specifies the V_{BUS} pulsing time during SRP.

31	30	29	28	27	26	25	24	23	22	21	20	19	18	17	16	15	14	13	12	11	10	9	8	7	6	5	4	3	2	1	0
Reserved																				DVBUSP											
																				rw	rw	rw	rw	rw	rw	rw	rw	rw	rw	rw	rw

Bits 31:12 Reserved, must be kept at reset value.

Bits 11:0 **DVBUSP:** Device V_{BUS} pulsing time
Specifies the V_{BUS} pulsing time during SRP. This value equals:
V_{BUS} pulsing time in PHY clocks / 1 024

OTG_FS device IN endpoint FIFO empty interrupt mask register: (OTG_FS_DIEPEMPMSK)

Address offset: 0x834

Reset value: 0x0000 0000

This register is used to control the IN endpoint FIFO empty interrupt generation (TXFE_OTG_FS_DIEPINTx).

31	30	29	28	27	26	25	24	23	22	21	20	19	18	17	16	15	14	13	12	11	10	9	8	7	6	5	4	3	2	1	0
Reserved																INEPTXFEM															
																rw	rw	rw	rw	rw	rw	rw	rw	rw	rw	rw	rw	rw	rw	rw	rw

Bits 31:16 Reserved, must be kept at reset value.

Bits 15:0 **INEPTXFEM:** IN EP Tx FIFO empty interrupt mask bits
These bits act as mask bits for OTG_FS_DIEPINTx.
TXFE interrupt one bit per IN endpoint:
Bit 0 for IN endpoint 0, bit 3 for IN endpoint 3
0: Masked interrupt
1: Unmasked interrupt

OTG_FS device control IN endpoint 0 control register (OTG_FS_DIEPCTL0)

Address offset: 0x900

Reset value: 0x0000 0000

This section describes the OTG_FS_DIEPCTL0 register. Nonzero control endpoints use registers for endpoints 1–3.

31	30	29	28	27	26	25	24	23	22	21	20	19	18	17	16	15	14	13	12	11	10	9	8	7	6	5	4	3	2	1	0
EPENA	EPDIS	Reserved		SNAK	CNAK	TXFNUM				STALL	Reserved	EPTYP		NAKSTS	Reserved	USBAEP	Reserved													MPSIZ	
r	r			w	w	rw	rw	rw	rw	rs		r	r	r		r														rw	rw

Bit 31 **EPENA:** Endpoint enable

The application sets this bit to start transmitting data on the endpoint 0.

The core clears this bit before setting any of the following interrupts on this endpoint:

– Endpoint disabled

– Transfer completed

Bit 30 **EPDIS:** Endpoint disable

The application sets this bit to stop transmitting data on an endpoint, even before the transfer for that endpoint is complete. The application must wait for the Endpoint disabled interrupt before treating the endpoint as disabled. The core clears this bit before setting the Endpoint disabled interrupt. The application must set this bit only if Endpoint enable is already set for this endpoint.

Bits 29:28 Reserved, must be kept at reset value.

Bit 27 **SNAK:** Set NAK

A write to this bit sets the NAK bit for the endpoint.

Using this bit, the application can control the transmission of NAK handshakes on an endpoint. The core can also set this bit for an endpoint after a SETUP packet is received on that endpoint.

Bit 26 **CNAK:** Clear NAK

A write to this bit clears the NAK bit for the endpoint.

Bits 25:22 **TXFNUM:** TxFIFO number

This value is set to the FIFO number that is assigned to IN endpoint 0.

Bit 21 **STALL:** STALL handshake

The application can only set this bit, and the core clears it when a SETUP token is received for this endpoint. If a NAK bit, a Global IN NAK or Global OUT NAK is set along with this bit, the STALL bit takes priority.

Bit 20 Reserved, must be kept at reset value.

Bits 19:18 **EPTYP:** Endpoint type

Hardcoded to ‘00’ for control.

Bit 17 **NAKSTS:** NAK status

Indicates the following:

0: The core is transmitting non-NAK handshakes based on the FIFO status

1: The core is transmitting NAK handshakes on this endpoint.

When this bit is set, either by the application or core, the core stops transmitting data, even if there are data available in the TxFIFO. Irrespective of this bit’s setting, the core always responds to SETUP data packets with an ACK handshake.

Bit 16 Reserved, must be kept at reset value.

Bit 15 **USBAEP:** USB active endpoint

This bit is always set to 1, indicating that control endpoint 0 is always active in all configurations and interfaces.

Bits 14:2 Reserved, must be kept at reset value.

Bits 1:0 **MPSIZ:** Maximum packet size

The application must program this field with the maximum packet size for the current logical endpoint.
00: 64 bytes
01: 32 bytes
10: 16 bytes
11: 8 bytes

OTG device endpoint x control register (OTG_FS_DIEPCTLx) (x = 1..3, where x = Endpoint_number)

Address offset: 0x900 + 0x20 * x

Reset value: 0x0000 0000

The application uses this register to control the behavior of each logical endpoint other than endpoint 0.

31	30	29	28	27	26	25	24	23	22	21	20	19	18	17	16	15	14	13	12	11	10	9	8	7	6	5	4	3	2	1	0
EPENA	EPDIS	SODDFRM	SD0PID/SEVNFRM	SNAK	CNAK	TXFNUM				STALL	Reserved	EPTYP		NAKSTS	EONUM/DPID	USBAEP	Reserved				MPSIZ										
rs	rs	w	w	w	w	rw	rw	rw	rw	rw		rw	rw	r	r	rw					rw	rw	rw	rw	rw	rw	rw	rw	rw	rw	rw

Bit 31 **EPENA:** Endpoint enable

The application sets this bit to start transmitting data on an endpoint.
The core clears this bit before setting any of the following interrupts on this endpoint:

- SETUP phase done
- Endpoint disabled
- Transfer completed

Bit 30 **EPDIS:** Endpoint disable

The application sets this bit to stop transmitting/receiving data on an endpoint, even before the transfer for that endpoint is complete. The application must wait for the Endpoint disabled interrupt before treating the endpoint as disabled. The core clears this bit before setting the Endpoint disabled interrupt. The application must set this bit only if Endpoint enable is already set for this endpoint.

Bit 29 **SODDFRM:** Set odd frame

Applies to isochronous IN and OUT endpoints only.
Writing to this field sets the Even/Odd frame (EONUM) field to odd frame.

Bit 28 **SD0PID:** Set DATA0 PID

Applies to interrupt/bulk IN endpoints only.

Writing to this field sets the endpoint data PID (DPID) field in this register to DATA0.

SEVNFRM: Set even frame

Applies to isochronous IN endpoints only.

Writing to this field sets the Even/Odd frame (EONUM) field to even frame.

Bit 27 **SNAK:** Set NAK

A write to this bit sets the NAK bit for the endpoint.

Using this bit, the application can control the transmission of NAK handshakes on an endpoint. The core can also set this bit for OUT endpoints on a Transfer completed interrupt, or after a SETUP is received on the endpoint.

Bit 26 **CNAK:** Clear NAK

A write to this bit clears the NAK bit for the endpoint.

Bits 25:22 **TXFNUM:** TxFIFO number

These bits specify the FIFO number associated with this endpoint. Each active IN endpoint must be programmed to a separate FIFO number.

This field is valid only for IN endpoints.

Bit 21 **STALL:** STALL handshake

Applies to non-control, non-isochronous IN endpoints only (access type is rw).

The application sets this bit to stall all tokens from the USB host to this endpoint. If a NAK bit, Global IN NAK, or Global OUT NAK is set along with this bit, the STALL bit takes priority. Only the application can clear this bit, never the core.

Bit 20 Reserved, must be kept at reset value.

Bits 19:18 **EPTYP:** Endpoint type

This is the transfer type supported by this logical endpoint.

00: Control

01: Isochronous

10: Bulk

11: Interrupt

Bit 17 **NAKSTS:** NAK status

It indicates the following:

0: The core is transmitting non-NAK handshakes based on the FIFO status.

1: The core is transmitting NAK handshakes on this endpoint.

When either the application or the core sets this bit:

For non-isochronous IN endpoints: The core stops transmitting any data on an IN endpoint, even if there are data available in the TxFIFO.

For isochronous IN endpoints: The core sends out a zero-length data packet, even if there are data available in the TxFIFO.

Irrespective of this bit's setting, the core always responds to SETUP data packets with an ACK handshake.

Bit 16 **EONUM:** Even/odd frame

Applies to isochronous IN endpoints only.

Indicates the frame number in which the core transmits/receives isochronous data for this endpoint. The application must program the even/odd frame number in which it intends to transmit/receive isochronous data for this endpoint using the SEVNFRM and SODDFRM fields in this register.

0: Even frame

1: Odd frame

DPID: Endpoint data PID

Applies to interrupt/bulk IN endpoints only.

Contains the PID of the packet to be received or transmitted on this endpoint. The application must program the PID of the first packet to be received or transmitted on this endpoint, after the endpoint is activated. The application uses the SD0PID register field to program either DATA0 or DATA1 PID.

0: DATA0

1: DATA1

Bit 15 **USBAEP:** USB active endpoint

Indicates whether this endpoint is active in the current configuration and interface. The core clears this bit for all endpoints (other than EP 0) after detecting a USB reset. After receiving the SetConfiguration and SetInterface commands, the application must program endpoint registers accordingly and set this bit.

Bits 14:11 Reserved, must be kept at reset value.

Bits 10:0 **MPSIZ:** Maximum packet size

The application must program this field with the maximum packet size for the current logical endpoint. This value is in bytes.

OTG_FS device control OUT endpoint 0 control register (OTG_FS_DOEPCTL0)

Address offset: 0xB00

Reset value: 0x0000 8000

This section describes the OTG_FS_DOEPCTL0 register. Nonzero control endpoints use registers for endpoints 1–3.

31	30	29	28	27	26	25	24	23	22	21	20	19	18	17	16	15	14	13	12	11	10	9	8	7	6	5	4	3	2	1	0
EPENA	EPDIS	Reserved		SNAK	CNAK	Reserved				STALL	SNPM	EPTYP		NAKSTS	Reserved	USBAEP	Reserved													MPSIZ	
w	r			w	w					rs	rw	r	r	r		r														r	r

Bit 31 **EPENA:** Endpoint enable

The application sets this bit to start transmitting data on endpoint 0.

The core clears this bit before setting any of the following interrupts on this endpoint:

- SETUP phase done
- Endpoint disabled
- Transfer completed

Bit 30 **EPDIS:** Endpoint disable

The application cannot disable control OUT endpoint 0.

Bits 29:28 Reserved, must be kept at reset value.

Bit 27 **SNAK:** Set NAK

A write to this bit sets the NAK bit for the endpoint.

Using this bit, the application can control the transmission of NAK handshakes on an endpoint. The core can also set this bit on a Transfer completed interrupt, or after a SETUP is received on the endpoint.

Bit 26 **CNAK:** Clear NAK

A write to this bit clears the NAK bit for the endpoint.

Bits 25:22 Reserved, must be kept at reset value.

Bit 21 **STALL:** STALL handshake

The application can only set this bit, and the core clears it, when a SETUP token is received for this endpoint. If a NAK bit or Global OUT NAK is set along with this bit, the STALL bit takes priority. Irrespective of this bit's setting, the core always responds to SETUP data packets with an ACK handshake.

Bit 20 **SNPM:** Snoop mode

This bit configures the endpoint to Snoop mode. In Snoop mode, the core does not check the correctness of OUT packets before transferring them to application memory.

Bits 19:18 **EPTYP:** Endpoint type

Hardcoded to 2'b00 for control.

Bit 17 **NAKSTS:** NAK status

Indicates the following:

0: The core is transmitting non-NAK handshakes based on the FIFO status.

1: The core is transmitting NAK handshakes on this endpoint.

When either the application or the core sets this bit, the core stops receiving data, even if there is space in the RxFIFO to accommodate the incoming packet. Irrespective of this bit's setting, the core always responds to SETUP data packets with an ACK handshake.

Bit 16 Reserved, must be kept at reset value.

Bit 15 **USBAEP:** USB active endpoint

This bit is always set to 1, indicating that a control endpoint 0 is always active in all configurations and interfaces.

Bits 14:2 Reserved, must be kept at reset value.

Bits 1:0 **MPSIZ:** Maximum packet size

The maximum packet size for control OUT endpoint 0 is the same as what is programmed in control IN endpoint 0.

00: 64 bytes

01: 32 bytes

10: 16 bytes

11: 8 bytes

OTG_FS device endpoint-x control register (OTG_FS_DOEPCTLx) (x = 1..3, where x = Endpoint_number)

Address offset for OUT endpoints: 0xB00 + 0x20 * x

Reset value: 0x0000 0000

The application uses this register to control the behavior of each logical endpoint other than endpoint 0.

31	30	29	28	27	26	25	24	23	22	21	20	19	18	17	16	15	14	13	12	11	10	9	8	7	6	5	4	3	2	1	0
EPENA	EPDIS	SODDFRM/SD1PID	SD0PID/SEVNFRM	SNAK	CNAK	Reserved				STALL	SNPM	EPTYP		NAKSTS	EONUM/DPID	USBAEP	Reserved				MPSIZ										
rs	rs	w	w	w	w					rw	rw	rw	rw	r	r	rw					rw	rw	rw	rw	rw	rw	rw	rw	rw	rw	rw

Bit 31 **EPENA:** Endpoint enable

Applies to IN and OUT endpoints.

The application sets this bit to start transmitting data on an endpoint.

The core clears this bit before setting any of the following interrupts on this endpoint:

- SETUP phase done
- Endpoint disabled
- Transfer completed

Bit 30 **EPDIS:** Endpoint disable

The application sets this bit to stop transmitting/receiving data on an endpoint, even before the transfer for that endpoint is complete. The application must wait for the Endpoint disabled interrupt before treating the endpoint as disabled. The core clears this bit before setting the Endpoint disabled interrupt. The application must set this bit only if Endpoint enable is already set for this endpoint.

Bit 29 **SD1PID:** Set DATA1 PID

Applies to interrupt/bulk IN and OUT endpoints only. Writing to this field sets the endpoint data PID (DPID) field in this register to DATA1.

SODDFRM: Set odd frame

Applies to isochronous IN and OUT endpoints only. Writing to this field sets the Even/Odd frame (EONUM) field to odd frame.

Bit 28 **SD0PID:** Set DATA0 PID

Applies to interrupt/bulk OUT endpoints only.

Writing to this field sets the endpoint data PID (DPID) field in this register to DATA0.

SEVNFRM: Set even frame

Applies to isochronous OUT endpoints only.

Writing to this field sets the Even/Odd frame (EONUM) field to even frame.

Bit 27 **SNAK:** Set NAK

A write to this bit sets the NAK bit for the endpoint.

Using this bit, the application can control the transmission of NAK handshakes on an endpoint. The core can also set this bit for OUT endpoints on a Transfer Completed interrupt, or after a SETUP is received on the endpoint.

Bit 26 **CNAK:** Clear NAK

A write to this bit clears the NAK bit for the endpoint.

Bits 25:22 Reserved, must be kept at reset value.

Bit 21 **STALL:** STALL handshake

Applies to non-control, non-isochronous OUT endpoints only (access type is rw).

The application sets this bit to stall all tokens from the USB host to this endpoint. If a NAK bit, Global IN NAK, or Global OUT NAK is set along with this bit, the STALL bit takes priority. Only the application can clear this bit, never the core.

Bit 20 **SNPM:** Snoop mode

This bit configures the endpoint to Snoop mode. In Snoop mode, the core does not check the correctness of OUT packets before transferring them to application memory.

Bits 19:18 **EPTYP:** Endpoint type

This is the transfer type supported by this logical endpoint.

00: Control

01: Isochronous

10: Bulk

11: Interrupt

Bit 17 **NAKSTS:** NAK status

Indicates the following:

0: The core is transmitting non-NAK handshakes based on the FIFO status.

1: The core is transmitting NAK handshakes on this endpoint.

When either the application or the core sets this bit:

The core stops receiving any data on an OUT endpoint, even if there is space in the RxFIFO to accommodate the incoming packet.

Irrespective of this bit's setting, the core always responds to SETUP data packets with an ACK handshake.

Bit 16 **EONUM:** Even/odd frame

Applies to isochronous IN and OUT endpoints only.

Indicates the frame number in which the core transmits/receives isochronous data for this endpoint. The application must program the even/odd frame number in which it intends to transmit/receive isochronous data for this endpoint using the SEVNFRM and SODDFRM fields in this register.

0: Even frame

1: Odd frame

DPID: Endpoint data PID

Applies to interrupt/bulk OUT endpoints only.

Contains the PID of the packet to be received or transmitted on this endpoint. The application must program the PID of the first packet to be received or transmitted on this endpoint, after the endpoint is activated. The application uses the SD0PID register field to program either DATA0 or DATA1 PID.

0: DATA0

1: DATA1

Bit 15 **USBAEP:** USB active endpoint

Indicates whether this endpoint is active in the current configuration and interface. The core clears this bit for all endpoints (other than EP 0) after detecting a USB reset. After receiving the SetConfiguration and SetInterface commands, the application must program endpoint registers accordingly and set this bit.

Bits 14:11 Reserved, must be kept at reset value.

Bits 10:0 **MPSIZ:** Maximum packet size

The application must program this field with the maximum packet size for the current logical endpoint. This value is in bytes.

OTG_FS device endpoint-x interrupt register (OTG_FS_DIEPINTx) (x = 0..3, where x = Endpoint_number)

Address offset: 0x908 + 0x20 * x

Reset value: 0x0000 0080

This register indicates the status of an endpoint with respect to USB- and AHB-related events. It is shown in *Figure 394*. The application must read this register when the IN endpoints interrupt bit of the Core interrupt register (IEPINT in OTG_FS_GINTSTS) is set. Before the application can read this register, it must first read the device all endpoints interrupt (OTG_FS_DAINT) register to get the exact endpoint number for the Device endpoint-x interrupt register. The application must clear the appropriate bit in this register to clear the corresponding bits in the OTG_FS_DAINT and OTG_FS_GINTSTS registers.

31	30	29	28	27	26	25	24	23	22	21	20	19	18	17	16	15	14	13	12	11	10	9	8	7	6	5	4	3	2	1	0
Reserved																		NAK	Reserved	PKTDRPSTS	Reserved			TXFE	INEPNE	INEPNM	ITTXFE	TOC	Reserved	EPDISD	XFRC
																		rc_w1		rc_w1				r	rc_w1	rc_w1	rc_w1	rc_w1		rc_w1	rc_w1

Bits 31:14 Reserved, must be kept at reset value.

Bit 13 **NAK**: NAK input

The core generates this interrupt when a NAK is transmitted or received by the device. In case of isochronous IN endpoints the interrupt gets generated when a zero length packet is transmitted due to unavailability of data in the Tx FIFO.

Bit 12 Reserved, must be kept at reset value.

Bit 11 **PKTDRPSTS**: Packet dropped status

This bit indicates to the application that an ISOC OUT packet has been dropped. This bit does not have an associated mask bit and does not generate an interrupt.

Bits 10:8 Reserved, must be kept at reset value.

Bit 7 **TXFE:** Transmit FIFO empty

This interrupt is asserted when the TxFIFO for this endpoint is either half or completely empty. The half or completely empty status is determined by the TxFIFO Empty Level bit in the OTG_FS_GAHBCFG register (TXFELVL bit in OTG_FS_GAHBCFG).

Bit 6 **INEPNE:** IN endpoint NAK effective

This bit can be cleared when the application clears the IN endpoint NAK by writing to the CNAK bit in OTG_FS_DIEPCTLx.

This interrupt indicates that the core has sampled the NAK bit set (either by the application or by the core). The interrupt indicates that the IN endpoint NAK bit set by the application has taken effect in the core.

This interrupt does not guarantee that a NAK handshake is sent on the USB. A STALL bit takes priority over a NAK bit.

Bit 5 **INEPNM**: IN token received with EP mismatch.

Indicates that the data in the top of the non-periodic TxFIFO belongs to an endpoint other than the one for which the IN token was received. This interrupt is asserted on the endpoint for which the IN token was received.

Bit 4 **ITTXFE:** IN token received when TxFIFO is empty

Applies to non-periodic IN endpoints only.

Indicates that an IN token was received when the associated TxFIFO (periodic/non-periodic) was empty. This interrupt is asserted on the endpoint for which the IN token was received.

Bit 3 **TOC:** Timeout condition

Applies only to Control IN endpoints.

Indicates that the core has detected a timeout condition on the USB for the last IN token on this endpoint.

Bit 2 Reserved, must be kept at reset value.

Bit 1 **EPDISD:** Endpoint disabled interrupt

This bit indicates that the endpoint is disabled per the application's request.

Bit 0 **XFRC:** Transfer completed interrupt

This field indicates that the programmed transfer is complete on the AHB as well as on the USB, for this endpoint.

OTG_FS device endpoint-x interrupt register (OTG_FS_DOEPINTx) (x = 0..3, where x = Endpoint_number)

Address offset: 0xB08 + 0x20 * x

Reset value: 0x0000 0080

This register indicates the status of an endpoint with respect to USB- and AHB-related events. It is shown in *Figure 394*. The application must read this register when the OUT Endpoints Interrupt bit of the OTG_FS_GINTSTS register (OEPINT bit in OTG_FS_GINTSTS) is set. Before the application can read this register, it must first read the OTG_FS_DAINT register to get the exact endpoint number for the OTG_FS_DOEPINTx register. The application must clear the appropriate bit in this register to clear the corresponding bits in the OTG_FS_DAINT and OTG_FS_GINTSTS registers.

31	30	29	28	27	26	25	24	23	22	21	20	19	18	17	16	15	14	13	12	11	10	9	8	7	6	5	4	3	2	1	0
Reserved																		NAK	BERR	Reserved			OUTPKTERR	Reserved		STSPHSRX	OTEPDIS	STUP	Reserved	EPDISD	XFRC
																		rc_w1	rc_w1				rc_w1			rc_w1	rc_w1	rc_w1		rc_w1	rc_w1

Bits 31:14 Reserved, must be kept at reset value.

Bit 13 **NAK**: NAK input

The core generates this interrupt when a NAK is transmitted or received by the device. In case of isochronous IN endpoints the interrupt gets generated when a zero length packet is transmitted due to unavailability of data in the Tx FIFO.

Bit 12 **BERR**: Babble error interrupt

The core generates this interrupt when babble is received for the endpoint.

Bits 11:9 Reserved, must be kept at reset value.

Bit 8 **OUTPKTERR**: OUT packet error

This interrupt is asserted when the core detects an overflow or a CRC error for an OUT packet. This interrupt is valid only when thresholding is enabled.

Bits 7:6 Reserved, must be kept at reset value.

Bit 5 **STSPHSRX**: Status phase received for control write

This interrupt is generated only after the core has transferred all the data that the host has sent during the data phase of a control write transfer, to the system memory buffer. The interrupt indicates to the application that the host has switched from data phase to the status phase of a control write transfer. The application can use this interrupt to ACK or STALL the status phase, after it has decoded the data phase.

Bit 4 **OTEPDIS:** OUT token received when endpoint disabled

Applies only to control OUT endpoints.

Indicates that an OUT token was received when the endpoint was not yet enabled. This interrupt is asserted on the endpoint for which the OUT token was received.

Bit 3 **STUP:** SETUP phase done

Applies to control OUT endpoint only.

Indicates that the SETUP phase for the control endpoint is complete and no more back-to-back SETUP packets were received for the current control transfer. On this interrupt, the application can decode the received SETUP data packet.

Bit 2 Reserved, must be kept at reset value.

Bit 1 **EPDISD:** Endpoint disabled interrupt

This bit indicates that the endpoint is disabled per the application's request.

Bit 0 **XFRC:** Transfer completed interrupt

This field indicates that the programmed transfer is complete on the AHB as well as on the USB, for this endpoint.

OTG_FS device IN endpoint 0 transfer size register (OTG_FS_DIEPTSIZ0)

Address offset: 0x910

Reset value: 0x0000 0000

The application must modify this register before enabling endpoint 0. Once endpoint 0 is enabled using the endpoint enable bit in the device control endpoint 0 control registers (EPENA in OTG_FS_DIEPCTL0), the core modifies this register. The application can only read this register once the core has cleared the Endpoint enable bit.

Nonzero endpoints use the registers for endpoints 1–3.

31	30	29	28	27	26	25	24	23	22	21	20	19	18	17	16	15	14	13	12	11	10	9	8	7	6	5	4	3	2	1	0
Reserved											PKTCNT		Reserved												XFRSIZ						
											rw	rw													rw	rw	rw	rw	rw	rw	rw

Bits 31:21 Reserved, must be kept at reset value.

Bits 20:19 **PKTCNT:** Packet count

Indicates the total number of USB packets that constitute the Transfer Size amount of data for endpoint 0.

This field is decremented every time a packet (maximum size or short packet) is read from the TxFIFO.

Bits 18:7 Reserved, must be kept at reset value.

Bits 6:0 **XFRSIZ:** Transfer size

Indicates the transfer size in bytes for endpoint 0. The core interrupts the application only after it has exhausted the transfer size amount of data. The transfer size can be set to the maximum packet size of the endpoint, to be interrupted at the end of each packet.

The core decrements this field every time a packet from the external memory is written to the TxFIFO.

OTG_FS device OUT endpoint 0 transfer size register (OTG_FS_DOEPTSIZ0)

Address offset: 0xB10

Reset value: 0x0000 0000

The application must modify this register before enabling endpoint 0. Once endpoint 0 is enabled using the Endpoint enable bit in the OTG_FS_DOEPCTL0 registers (EPENA bit in OTG_FS_DOEPCTL0), the core modifies this register. The application can only read this register once the core has cleared the Endpoint enable bit.

Nonzero endpoints use the registers for endpoints 1–3.

31	30	29	28	27	26	25	24	23	22	21	20	19	18	17	16	15	14	13	12	11	10	9	8	7	6	5	4	3	2	1	0
Reserved	STUPCNT		Reserved									PKTCNT	Reserved												XFRSIZ						
	rw	rw										rw													rw	rw	rw	rw	rw	rw	rw

Bit 31 Reserved, must be kept at reset value.

Bits 30:29 **STUPCNT:** SETUP packet count

This field specifies the number of back-to-back SETUP data packets the endpoint can receive.

01: 1 packet

10: 2 packets

11: 3 packets

Bits 28:20 Reserved, must be kept at reset value.

Bit 19 **PKTCNT:** Packet count

This field is decremented to zero after a packet is written into the RxFIFO.

Bits 18:7 Reserved, must be kept at reset value.

Bits 6:0 **XFRSIZ:** Transfer size

Indicates the transfer size in bytes for endpoint 0. The core interrupts the application only after it has exhausted the transfer size amount of data. The transfer size can be set to the maximum packet size of the endpoint, to be interrupted at the end of each packet.

The core decrements this field every time a packet is read from the RxFIFO and written to the external memory.

OTG_FS device endpoint-x transfer size register (OTG_FS_DIEPTSIZx) (x = 1..3, where x = Endpoint_number)

Address offset: 0x910 + 0x20 * x

Reset value: 0x0000 0000

The application must modify this register before enabling the endpoint. Once the endpoint is enabled using the Endpoint enable bit in the OTG_FS_DIEPCTLx registers (EPENA bit in OTG_FS_DIEPCTLx), the core modifies this register. The application can only read this register once the core has cleared the Endpoint enable bit.

31	30	29	28	27	26	25	24	23	22	21	20	19	18	17	16	15	14	13	12	11	10	9	8	7	6	5	4	3	2	1	0
Reserved			PKTCNT										XFRSIZ																		
			rw	rw	rw	rw	rw	rw	rw	rw	rw	rw	rw	rw	rw	rw	rw	rw	rw	rw	rw	rw	rw	rw	rw	rw	rw	rw	rw	rw	rw

Bits 31:29 Reserved, must be kept at reset value.

Bit 28:19 **PKTCNT:** Packet count

Indicates the total number of USB packets that constitute the Transfer Size amount of data for this endpoint.

This field is decremented every time a packet (maximum size or short packet) is read from the TxFIFO.

Bits 18:0 **XFRSIZ:** Transfer size

This field contains the transfer size in bytes for the current endpoint. The core only interrupts the application after it has exhausted the transfer size amount of data. The transfer size can be set to the maximum packet size of the endpoint, to be interrupted at the end of each packet.

The core decrements this field every time a packet from the external memory is written to the TxFIFO.

OTG_FS device IN endpoint transmit FIFO status register (OTG_FS_DTXFSTSx) (x = 0..3, where x = Endpoint_number)

Address offset for IN endpoints: 0x918 + 0x20 * x

This read-only register contains the free space information for the Device IN endpoint TxFIFO.

31	30	29	28	27	26	25	24	23	22	21	20	19	18	17	16	15	14	13	12	11	10	9	8	7	6	5	4	3	2	1	0
Reserved																INEPTFSAV															
																r	r	r	r	r	r	r	r	r	r	r	r	r	r	r	r

31:16 Reserved, must be kept at reset value.

15:0 **INEPTFSAV:** IN endpoint TxFIFO space available
Indicates the amount of free space available in the Endpoint TxFIFO.
Values are in terms of 32-bit words:
0x0: Endpoint TxFIFO is full
0x1: 1 word available
0x2: 2 words available
0xn: n words available
Others: Reserved

OTG_FS device OUT endpoint-x transfer size register (OTG_FS_DOEPTSIZx) (x = 1..3, where x = Endpoint_number)

Address offset: 0xB10 + 0x20 * x

Reset value: 0x0000 0000

The application must modify this register before enabling the endpoint. Once the endpoint is enabled using Endpoint Enable bit of the OTG_FS_DOEPCTLx registers (EPENA bit in OTG_FS_DOEPCTLx), the core modifies this register. The application can only read this register once the core has cleared the Endpoint enable bit.

31	30	29	28	27	26	25	24	23	22	21	20	19	18	17	16	15	14	13	12	11	10	9	8	7	6	5	4	3	2	1	0
Reserved	RXDPID/STUPCNT		PKTCNT										XFRSIZ																		
	r/rw	r/rw	rw	rw	rw	rw	rw	rw	rw	rw	rw	rw	rw	rw	rw	rw	rw	rw	rw	rw	rw	rw	rw	rw	rw	rw	rw	rw	rw	rw	rw

Bit 31 Reserved, must be kept at reset value.

Bits 30:29 **RXDPID:** Received data PID
Applies to isochronous OUT endpoints only.
This is the data PID received in the last packet for this endpoint.
00: DATA0
01: DATA2
10: DATA1
11: MDATA

STUPCNT: SETUP packet count

Applies to control OUT Endpoints only.

This field specifies the number of back-to-back SETUP data packets the endpoint can receive.

01: 1 packet

10: 2 packets

11: 3 packets

Bit 28:19 **PKTCNT:** Packet count

Indicates the total number of USB packets that constitute the Transfer Size amount of data for this endpoint.

This field is decremented every time a packet (maximum size or short packet) is written to the RxFIFO.

Bits 18:0 **XFRSIZ:** Transfer size

This field contains the transfer size in bytes for the current endpoint. The core only interrupts the application after it has exhausted the transfer size amount of data. The transfer size can be set to the maximum packet size of the endpoint, to be interrupted at the end of each packet.

The core decrements this field every time a packet is read from the RxFIFO and written to the external memory.

34.16.5 OTG_FS power and clock gating control register (OTG_FS_PCGCCTL)

Address offset: 0xE00

Reset value: 0x0000 0000

This register is available in host and device modes.

31	30	29	28	27	26	25	24	23	22	21	20	19	18	17	16	15	14	13	12	11	10	9	8	7	6	5	4	3	2	1	0
Reserved																											PHYSUSP	Reserved		GATEHCLK	STPPCLK
																											rw			rw	rw

Bit 31:5 Reserved, must be kept at reset value.

Bit 4 **PHYSUSP:** PHY Suspended

Indicates that the PHY has been suspended. This bit is updated once the PHY is suspended after the application has set the STPPCLK bit (bit 0).

Bits 3:2 Reserved, must be kept at reset value.

Bit 1 **GATEHCLK:** Gate HCLK

The application sets this bit to gate HCLK to modules other than the AHB Slave and Master and wakeup logic when the USB is suspended or the session is not valid. The application clears this bit when the USB is resumed or a new session starts.

Bit 0 **STPPCLK:** Stop PHY clock

The application sets this bit to stop the PHY clock when the USB is suspended, the session is not valid, or the device is disconnected. The application clears this bit when the USB is resumed or a new session starts.

34.16.6 OTG_FS register map

The table below gives the USB OTG register map and reset values.

Table 205. OTG_FS register map and reset values

Offset	Register	31	30	29	28	27	26	25	24	23	22	21	20	19	18	17	16	15	14	13	12	11	10	9	8	7	6	5	4	3	2	1	0
0x000	OTG_FS_GOTGCTL	Reserved												BSVLD	ASVLD	DBCT	CIDSTS	Reserved				DHNPEN	HSHNPEN	HNPRQ	HNGSCS	Reserved						SRQ	SRQSCS
	Reset value													0	0	0	1					0	0	0	0							0	0
0x004	OTG_FS_GOTGINT	Reserved												DBCDNE	ADTOCHG	HNGDET	Reserved							HNSSCHG	SRSSCHG	Reserved					SEDET	Res.	
	Reset value													0	0	0								0	0						0		
0x008	OTG_FS_GAHBCFG	Reserved																							PTXFELVL	TXFELVL	Reserved						GINTMSK
	Reset value																								0	0							0
0x00C	OTG_FS_GUSBCFG	CTXPKT	FDMOD	FHMOD	Reserved															TRDT				HNPCA	SRPCAP	Reserved	PHYSEL	Reserved			TOCAL		
	Reset value	0	0	0																0	0	1	0	1	0		0				0	0	0
0x010	OTG_FS_GRSTCTL	AHBIDL	Reserved																				TXFNUM						TXFFLSH	RXFFLSH	Reserved	FCRST	HSRST	CSRST
	Reset value	1																					0	0	0	0	0		0	0		0	0	0
0x014	OTG_FS_GINTSTS	WKUINT	SRQINT	DISCINT	CIDSCHG	Reserved	PTXFE	HCINT	HPRTINT	Reserved		IPXFR/INCOMPISOOUT	IISOIXFR	OEPINT	IEPINT	Reserved		EOPF	ISOODRP	ENUMDNE	USBRST	USBSUSP	ESUSP	Reserved		GONAKEFF	GINAKEFF	NPTXFE	RXFLVL	SOF	OTGINT	MMIS	CMOD
	Reset value	0	0	0	0		1	0	0			0	0	0	0			0	0	0	0	0	0			0	0	1	0	0	0	0	0
0x018	OTG_FS_GINTMSK	WUIM	SRQIM	DISCINT	CIDSCHGM	Reserved	PTXFEM	HCIM	PRTIM	Reserved		IPXFRM/IISOOXFRM	IISOIXFRM	OEPINT	IEPINT	Reserved		EOPFM	ISOODRPM	ENUMDNEM	USBRST	USBSUSPM	ESUSPM	Reserved		GONAKEFFM	GINAKEFFM	NPTXFEM	RXFLVLM	SOFM	OTGINT	MMISM	Reserved
	Reset value	0	0	0	0		0	0	0			0	0	0	0			0	0	0	0	0	0			0	0	0	0	0	0	0	
0x01C	OTG_FS_GRXSTSR (host mode)	Reserved											PKTSTS				DPID		BCNT											CHNUM			
	Reset value												0	0	0	0		0	0	0	0	0	0	0	0	0	0	0	0	0	0	0	
	OTG_FS_GRXSTSR (Device mode)	Reserved							FRMNUM				PKTSTS				DPID		BCNT											EPNUM			
	Reset value								0	0	0	0	0	0	0	0	0	0	0	0	0	0	0	0	0	0	0	0	0	0	0	0	0

Table 205. OTG_FS register map and reset values (continued)

Offset	Register	31	30	29	28	27	26	25	24	23	22	21	20	19	18	17	16	15	14	13	12	11	10	9	8	7	6	5	4	3	2	1	0
0x020	OTG_FS_GRXSTSR (host mode)	Reserved											PKTSTS				DPID		BCNT											CHNUM			
	Reset value												0	0	0	0		0	0	0	0	0	0	0	0	0	0	0	0	0	0	0	
	OTG_FS_GRXSTSPR (Device mode)	Reserved							FRMNUM				PKTSTS				DPID		BCNT											EPNUM			
	Reset value								0	0	0	0	0	0	0	0	0	0	0	0	0	0	0	0	0	0	0	0	0	0	0	0	0
0x024	OTG_FS_GRXFSIZ	Reserved																RXFD															
	Reset value																	0	0	0	0	0	0	1	0	0	0	0	0	0	0	0	0
0x028	OTG_FS_HNPTXFSIZ/ OTG_FS_DIEPTXF0	NPTXFD/TX0FD																NPTXFSA/TX0FSA															
	Reset value	0	0	0	0	0	0	0	0	0	0	0	0	0	0	0	0	0	0	0	0	0	0	1	0	0	0	0	0	0	0	0	0
0x02C	OTG_FS_HNPTXSTS	Res.	NPTXQTOP							NPTQXSAV								NPTXFSAV															
	Reset value		0	0	0	0	0	0	0	0	0	0	0	0	1	0	0	0	0	0	0	0	0	1	0	0	0	0	0	0	0	0	0
0x038	OTG_FS_GCCFG	Reserved										NOVBUSSENS	SOFOUTEN	VBUSBSEN	VBUSASEN	Reserved	.PWRDWN	Reserved															
	Reset value											0	0	0	0		0																
0x03C	OTG_FS_CID	PRODUCT_ID																															
	Reset value	0	0	0	0	0	0	0	0	0	0	0	0	0	0	0	0	0	0	0	1	0	0	1	0	0	0	0	0	0	0	0	0
0x100	OTG_FS_HPTXFSIZ	PTXFSIZ																PTXSA															
	Reset value	0	0	0	0	0	0	1	0	0	0	0	0	0	0	0	0	0	0	0	0	0	1	0	0	0	0	0	0	0	0	0	0
0x104	OTG_FS_DIEPTXF1	INEPTXFD																INEPTXSA															
	Reset value	0	0	0	0	0	0	1	0	0	0	0	0	0	0	0	0	0	0	0	0	0	0	1	0	0	0	0	0	0	0	0	0
0x108	OTG_FS_DIEPTXF2	INEPTXFD																INEPTXSA															
	Reset value	0	0	0	0	0	0	1	0	0	0	0	0	0	0	0	0	0	0	0	0	0	1	0	0	0	0	0	0	0	0	0	0
0x10C	OTG_FS_DIEPTXF3	INEPTXFD																INEPTXSA															
	Reset value	0	0	0	0	0	0	1	0	0	0	0	0	0	0	0	0	0	0	0	0	0	1	0	0	0	0	0	0	0	0	0	0
0x400	OTG_FS_HCFG	Reserved																													FSLSS	FSLSPCS	
	Reset value																														0	0	0
0x404	OTG_FS_HFIR	Reserved																FRIVL															
	Reset value																	1	1	1	0	1	0	1	0	0	1	1	0	0	0	0	0
0x408	OTG_FS_HFNUM	FTREM																FRNUM															
	Reset value	0	0	0	0	0	0	0	0	0	0	0	0	0	0	0	0	0	0	1	1	1	1	1	1	1	1	1	1	1	1	1	1

Table 205. OTG_FS register map and reset values (continued)

Offset	Register	31	30	29	28	27	26	25	24	23	22	21	20	19	18	17	16	15	14	13	12	11	10	9	8	7	6	5	4	3	2	1	0
0x410	OTG_FS_HPTXSTS	PTXQTOP								PTXQSAV								PTXFSAVL															
	Reset value	0	0	0	0	0	0	0	0	Y	Y	Y	Y	Y	Y	Y	Y	Y	Y	Y	Y	Y	Y	Y	Y	Y	Y	Y	Y	Y	Y	Y	Y
0x414	OTG_FS_HAINT	Reserved																HAINT															
	Reset value																	0	0	0	0	0	0	0	0	0	0	0	0	0	0	0	0
0x418	OTG_FS_HAINTMSK	Reserved																HAINTM															
	Reset value																	0	0	0	0	0	0	0	0	0	0	0	0	0	0	0	0
0x440	OTG_FS_HPRT	Reserved													PSPD		PTCTL				PPWR	PLSTS		Reserved	PRST	PSUSP	PRES	POCCHNG	POCA	PENCHNG	PENA	PCDET	PCSTS
	Reset value														0	0	0	0	0	0	0	0	0		0	0	0	0	0	0	0	0	0
0x500	OTG_FS_HCCHAR0	CHENA	CHDIS	ODDFRM	DAD							MCNT		EPTYP		LSDEV	Reserved	EPDIR	EPNUM					MPSIZ									
	Reset value	0	0	0	0	0	0	0	0	0	0	0	0	0	0	0		0	0	0	0	0	0	0	0	0	0	0	0	0	0	0	0
0x520	OTG_FS_HCCHAR1	CHENA	CHDIS	ODDFRM	DAD							MCNT		EPTYP		LSDEV	Reserved	EPDIR	EPNUM					MPSIZ									
	Reset value	0	0	0	0	0	0	0	0	0	0	0	0	0	0	0		0	0	0	0	0	0	0	0	0	0	0	0	0	0	0	0
0x540	OTG_FS_HCCHAR2	CHENA	CHDIS	ODDFRM	DAD							MCNT		EPTYP		LSDEV	Reserved	EPDIR	EPNUM					MPSIZ									
	Reset value	0	0	0	0	0	0	0	0	0	0	0	0	0	0	0		0	0	0	0	0	0	0	0	0	0	0	0	0	0	0	0
0x560	OTG_FS_HCCHAR3	CHENA	CHDIS	ODDFRM	DAD							MCNT		EPTYP		LSDEV	Reserved	EPDIR	EPNUM					MPSIZ									
	Reset value	0	0	0	0	0	0	0	0	0	0	0	0	0	0	0		0	0	0	0	0	0	0	0	0	0	0	0	0	0	0	0
0x580	OTG_FS_HCCHAR4	CHENA	CHDIS	ODDFRM	DAD							MCNT		EPTYP		LSDEV	Reserved	EPDIR	EPNUM					MPSIZ									
	Reset value	0	0	0	0	0	0	0	0	0	0	0	0	0	0	0		0	0	0	0	0	0	0	0	0	0	0	0	0	0	0	0
0x5A0	OTG_FS_HCCHAR5	CHENA	CHDIS	ODDFRM	DAD							MCNT		EPTYP		LSDEV	Reserved	EPDIR	EPNUM					MPSIZ									
	Reset value	0	0	0	0	0	0	0	0	0	0	0	0	0	0	0		0	0	0	0	0	0	0	0	0	0	0	0	0	0	0	0
0x5C0	OTG_FS_HCCHAR6	CHENA	CHDIS	ODDFRM	DAD							MCNT		EPTYP		LSDEV	Reserved	EPDIR	EPNUM					MPSIZ									
	Reset value	0	0	0	0	0	0	0	0	0	0	0	0	0	0	0		0	0	0	0	0	0	0	0	0	0	0	0	0	0	0	0
0x5E0	OTG_FS_HCCHAR7	CHENA	CHDIS	ODDFRM	DAD							MCNT		EPTYP		LSDEV	Reserved	EPDIR	EPNUM					MPSIZ									
	Reset value	0	0	0	0	0	0	0	0	0	0	0	0	0	0	0		0	0	0	0	0	0	0	0	0	0	0	0	0	0	0	0
0x508	OTG_FS_HCINT0	Reserved																					DTERR	FRMOR	BBERR	TXERR	Reserved	ACK	NAK	STALL	Reserved	CHH	XFRC
	Reset value																						0	0	0	0		0	0	0		0	0

Table 205. OTG_FS register map and reset values (continued)

Offset	Register	31	30	29	28	27	26	25	24	23	22	21	20	19	18	17	16	15	14	13	12	11	10	9	8	7	6	5	4	3	2	1	0
0x528	OTG_FS_HCINT1	Reserved																					DTERR	FRMOR	BBERR	TXERR	Reserved	ACK	NAK	STALL	Reserved	CHH	XFRC
	Reset value																						0	0	0	0		0	0	0		0	0
0x548	OTG_FS_HCINT2	Reserved																					DTERR	FRMOR	BBERR	TXERR	Reserved	ACK	NAK	STALL	Reserved	CHH	XFRC
	Reset value																						0	0	0	0		0	0	0		0	0
0x568	OTG_FS_HCINT3	Reserved																					DTERR	FRMOR	BBERR	TXERR	Reserved	ACK	NAK	STALL	Reserved	CHH	XFRC
	Reset value																						0	0	0	0		0	0	0		0	0
0x588	OTG_FS_HCINT4	Reserved																					DTERR	FRMOR	BBERR	TXERR	Reserved	ACK	NAK	STALL	Reserved	CHH	XFRC
	Reset value																						0	0	0	0		0	0	0		0	0
0x5A8	OTG_FS_HCINT5	Reserved																					DTERR	FRMOR	BBERR	TXERR	Reserved	ACK	NAK	STALL	Reserved	CHH	XFRC
	Reset value																						0	0	0	0		0	0	0		0	0
0x5C8	OTG_FS_HCINT6	Reserved																					DTERR	FRMOR	BBERR	TXERR	Reserved	ACK	NAK	STALL	Reserved	CHH	XFRC
	Reset value																						0	0	0	0		0	0	0		0	0
0x5E8	OTG_FS_HCINT7	Reserved																					DTERR	FRMOR	BBERR	TXERR	Reserved	ACK	NAK	STALL	Reserved	CHH	XFRC
	Reset value																						0	0	0	0		0	0	0		0	0
0x50C	OTG_FS_HCINTMSK0	Reserved																					DTERRM	FRMORM	BBERRM	TXERRM	Reserved	ACKM	NAKM	STALLM	Reserved	CHHM	XFRCM
	Reset value																						0	0	0	0		0	0	0		0	0
0x52C	OTG_FS_HCINTMSK1	Reserved																					DTERRM	FRMORM	BBERRM	TXERRM	Reserved	ACKM	NAKM	STALLM	Reserved	CHHM	XFRCM
	Reset value																						0	0	0	0		0	0	0		0	0
0x54C	OTG_FS_HCINTMSK2	Reserved																					DTERRM	FRMORM	BBERRM	TXERRM	Reserved	ACKM	NAKM	STALLM	Reserved	CHHM	XFRCM
	Reset value																						0	0	0	0		0	0	0		0	0
0x56C	OTG_FS_HCINTMSK3	Reserved																					DTERRM	FRMORM	BBERRM	TXERRM	Reserved	ACKM	NAKM	STALLM	Reserved	CHHM	XFRCM
	Reset value																						0	0	0	0		0	0	0		0	0
0x58C	OTG_FS_HCINTMSK4	Reserved																					DTERRM	FRMORM	BBERRM	TXERRM	Reserved	ACKM	NAKM	STALLM	Reserved	CHHM	XFRCM
	Reset value																						0	0	0	0		0	0	0		0	0

Table 205. OTG_FS register map and reset values (continued)

Offset	Register	31	30	29	28	27	26	25	24	23	22	21	20	19	18	17	16	15	14	13	12	11	10	9	8	7	6	5	4	3	2	1	0
0x5AC	OTG_FS_HCINTMSK5	Reserved																					DTERRM	FRMORM	BBERRM	TXERRM	Reserved	ACKM	NAKM	STALLM	Reserved	CHHM	XFRCM
	Reset value																						0	0	0	0		0	0	0		0	0
0x5CC	OTG_FS_HCINTMSK6	Reserved																					DTERRM	FRMORM	BBERRM	TXERRM	Reserved	ACKM	NAKM	STALLM	Reserved	CHHM	XFRCM
	Reset value																						0	0	0	0		0	0	0		0	0
0x5EC	OTG_FS_HCINTMSK7	Reserved																					DTERRM	FRMORM	BBERRM	TXERRM	Reserved	ACKM	NAKM	STALLM	Reserved	CHHM	XFRCM
	Reset value																						0	0	0	0		0	0	0		0	0
0x510	OTG_FS_HCTSIZ0	Reserved	DPID		PKTCNT										XFRSIZ																		
	Reset value		0	0	0	0	0	0	0	0	0	0	0	0	0	0	0	0	0	0	0	0	0	0	0	0	0	0	0	0	0	0	0
0x530	OTG_FS_HCTSIZ1	Reserved	DPID		PKTCNT										XFRSIZ																		
	Reset value		0	0	0	0	0	0	0	0	0	0	0	0	0	0	0	0	0	0	0	0	0	0	0	0	0	0	0	0	0	0	0
0x550	OTG_FS_HCTSIZ2	Reserved	DPID		PKTCNT										XFRSIZ																		
	Reset value		0	0	0	0	0	0	0	0	0	0	0	0	0	0	0	0	0	0	0	0	0	0	0	0	0	0	0	0	0	0	0
0x570	OTG_FS_HCTSIZ3	Reserved	DPID		PKTCNT										XFRSIZ																		
	Reset value		0	0	0	0	0	0	0	0	0	0	0	0	0	0	0	0	0	0	0	0	0	0	0	0	0	0	0	0	0	0	0
0x590	OTG_FS_HCTSIZ4	Reserved	DPID		PKTCNT										XFRSIZ																		
	Reset value		0	0	0	0	0	0	0	0	0	0	0	0	0	0	0	0	0	0	0	0	0	0	0	0	0	0	0	0	0	0	0
0x5B0	OTG_FS_HCTSIZ5	Reserved	DPID		PKTCNT										XFRSIZ																		
	Reset value		0	0	0	0	0	0	0	0	0	0	0	0	0	0	0	0	0	0	0	0	0	0	0	0	0	0	0	0	0	0	0
0x5D0	OTG_FS_HCTSIZ6	Reserved	DPID		PKTCNT										XFRSIZ																		
	Reset value		0	0	0	0	0	0	0	0	0	0	0	0	0	0	0	0	0	0	0	0	0	0	0	0	0	0	0	0	0	0	0
0x5F0	OTG_FS_HCTSIZ7	Reserved	DPID		PKTCNT										XFRSIZ																		
	Reset value		0	0	0	0	0	0	0	0	0	0	0	0	0	0	0	0	0	0	0	0	0	0	0	0	0	0	0	0	0	0	0
0x800	OTG_FS_DCFG	Reserved																			PFIVL		DAD								Reserved	NZLSOHSK	DSPD
	Reset value																				0	0	0	0	0	0	0	0	0			0	0	0
0x804	OTG_FS_DCTL	Reserved																				POPRGDNE	CGONAK	SGONAK	CGINAK	SGINAK	TCTL				GONSTS	GINSTS	SDIS	RWUSIG
	Reset value																					0	0	0	0	0	0	0	0		0	0	0	0

Table 205. OTG_FS register map and reset values (continued)

Offset	Register	31	30	29	28	27	26	25	24	23	22	21	20	19	18	17	16	15	14	13	12	11	10	9	8	7	6	5	4	3	2	1	0
0x808	OTG_FS_DSTS	Reserved										FNSOF														Reserved				EERR	ENUMSPD		SUSPSTS
	Reset value											0	0	0	0	0	0	0	0	0	0	0	0	0	0					0	0	0	0
0x810	OTG_FS_DIEPMSK	Reserved																		NAKM	Reserved						INEPNEM	INEPNMM	ITTXFEMSK	TOM	Reserved	EPDM	XFRCM
	Reset value																			0							0	0	0	0		0	0
0x814	OTG_FS_DOEPMSK	Reserved																		NAKMSK	BERRM	Reserved			OUTPKTERRM	Reserved		STSPHSRXM	OTEPDM	STUPM	Reserved	EPDM	XFRCM
	Reset value																			0	0				0			0	0	0		0	0
0x818	OTG_FS_DAINT	OEPINT																IEPINT															
	Reset value	0	0	0	0	0	0	0	0	0	0	0	0	0	0	0	0	0	0	0	0	0	0	0	0	0	0	0	0	0	0	0	0
0x81C	OTG_FS_DAINTMSK	OEPM																IEPM															
	Reset value	0	0	0	0	0	0	0	0	0	0	0	0	0	0	0	0	0	0	0	0	0	0	0	0	0	0	0	0	0	0	0	0
0x828	OTG_FS_DVBUSDIS	Reserved																VBUSDT															
	Reset value																	0	0	0	1	0	1	1	1	1	1	0	1	0	1	1	1
0x82C	OTG_FS_DVBUSPULSE	Reserved																				DVBUSP											
	Reset value																					0	1	0	1	1	0	1	1	1	0	0	0
0x834	OTG_FS_DIEPEMPMSK	Reserved																INEPTXFEM															
	Reset value																	0	0	0	0	0	0	0	0	0	0	0	0	0	0	0	0
0x900	OTG_FS_DIEPCTL0	EPENA	EPDIS	Reserved		SNAK	CNAK	TXFNUM				STALL	Reserved	EPTYP		NAKSTS	Reserved	USBAEP	Reserved													MPSIZ	
	Reset value	0	0			0	0	0	0	0	0	0		0	0	0		1														0	0
0x918	TG_FS_DTXFSTS0	Reserved																INEPTFSAV															
	Reset value																	0	0	0	0	0	0	1	0	0	0	0	0	0	0	0	0
0x920	OTG_FS_DIEPCTL1	EPENA	EPDIS	SODDFRM/SD1PID	SD0PID/SEVNFRM	SNAK	CNAK	TXFNUM				STALL	Reserved	EPTYP		NAKSTS	EONUM/DPID	USBAEP	Reserved								MPSIZ						
	Reset value	0	0	0	0	0	0	0	0	0	0	0		0	0	0	0	0					0	0	0	0	0	0	0	0	0	0	0
0x938	TG_FS_DTXFSTS1	Reserved																INEPTFSAV															
	Reset value																	0	0	0	0	0	0	1	0	0	0	0	0	0	0	0	0

Table 205. OTG_FS register map and reset values (continued)

Offset	Register	31	30	29	28	27	26	25	24	23	22	21	20	19	18	17	16	15	14	13	12	11	10	9	8	7	6	5	4	3	2	1	0
0x940	OTG_FS_DIEPCTL2	EPENA	EPDIS	SODDFRM	SD0PID/SEVNFRM	SNAK	CNAK	TXFNUM				STALL	Reserved	EPTYP		NAKSTS	EONUM/DPID	USBAEP	Reserved				MPSIZ										
	Reset value	0	0	0	0	0	0	0	0	0	0	0		0	0	0	0	0					0	0	0	0	0	0	0	0	0	0	0
0x958	TG_FS_DTXFSTS2	Reserved																INEPTFSAV															
	Reset value																	0	0	0	0	0	0	1	0	0	0	0	0	0	0	0	0
0x960	OTG_FS_DIEPCTL3	EPENA	EPDIS	SODDFRM	SD0PID/SEVNFRM	SNAK	CNAK	TXFNUM				STALL	Reserved	EPTYP		NAKSTS	EONUM/DPID	USBAEP	Reserved				MPSIZ										
	Reset value	0	0	0	0	0	0	0	0	0	0	0		0	0	0	0	0					0	0	0	0	0	0	0	0	0	0	0
0x978	TG_FS_DTXFSTS3	Reserved																INEPTFSAV															
	Reset value																	0	0	0	0	0	0	1	0	0	0	0	0	0	0	0	0
0xB00	OTG_FS_DOEPCTL0	EPENA	EPDIS	Reserved		SNAK	CNAK	Reserved				STALL	SNPM	EPTYP		NAKSTS	Reserved	USBAEP	Reserved													MPSIZ	
	Reset value	0	0			0	0					0	0	0	0	0		1														0	0
0xB20	OTG_FS_DOEPCTL1	EPENA	EPDIS	SODDFRM	SD0PID/SEVNFRM	SNAK	CNAK	Reserved				STALL	SNPM	EPTYP		NAKSTS	EONUM/DPID	USBAEP	Reserved				MPSIZ										
	Reset value	0	0	0	0	0	0					0	0	0	0	0	0	0					0	0	0	0	0	0	0	0	0	0	0
0xB40	OTG_FS_DOEPCTL2	EPENA	EPDIS	SODDFRM	SD0PID/SEVNFRM	SNAK	CNAK	Reserved				STALL	SNPM	EPTYP		NAKSTS	EONUM/DPID	USBAEP	Reserved				MPSIZ										
	Reset value	0	0	0	0	0	0					0	0	0	0	0	0	0					0	0	0	0	0	0	0	0	0	0	0
0xB60	OTG_FS_DOEPCTL3	EPENA	EPDIS	SODDFRM	SD0PID/SEVNFRM	SNAK	CNAK	Reserved				STALL	SNPM	EPTYP		NAKSTS	EONUM/DPID	USBAEP	Reserved				MPSIZ										
	Reset value	0	0	0	0	0	0					0	0	0	0	0	0	0					0	0	0	0	0	0	0	0	0	0	0
0x908	OTG_FS_DIEPINT0	Reserved																		NAK	Reserved	PKTDRPSTS	Reserved			TXFE	INEPNE	INEPNM	ITTXFE	TOC	Reserved	EPDISD	XFRC
	Reset value																			0		0				1	0	0	0	0		0	0

Table 205. OTG_FS register map and reset values (continued)

Offset	Register	31	30	29	28	27	26	25	24	23	22	21	20	19	18	17	16	15	14	13	12	11	10	9	8	7	6	5	4	3	2	1	0
0x928	OTG_FS_DIEPINT1	Reserved																		NAK	Reserved	PKTDRPSTS	Reserved			TXFE	INEPNE	INEPNM	ITTXFE	TOC	Reserved	EPDISD	XFRC
	Reset value																			0		0				1	0	0	0	0		0	0
0x948	OTG_FS_DIEPINT2	Reserved																		NAK	Reserved	PKTDRPSTS	Reserved			TXFE	INEPNE	INEPNM	ITTXFE	TOC	Reserved	EPDISD	XFRC
	Reset value																			0		0				1	0	0	0	0		0	0
0x968	OTG_FS_DIEPINT3	Reserved																		NAK	Reserved	PKTDRPSTS	Reserved			TXFE	INEPNE	INEPNM	ITTXFE	TOC	Reserved	EPDISD	XFRC
	Reset value																			0		0				1	0	0	0	0		0	0
0xB08	OTG_FS_DOEPINT0	Reserved																		NAK	BERR	Reserved			OUTPKTERR	Reserved		STSPHSRX	OTEPDIS	STUP	Reserved	EPDISD	XFRC
	Reset value																			0	0				0			0	0	0		0	0
0xB28	OTG_FS_DOEPINT1	Reserved																		NAK	BERR	Reserved			OUTPKTERR	Reserved		STSPHSRX	OTEPDIS	STUP	Reserved	EPDISD	XFRC
	Reset value																			0	0				0			0	0	0		0	0
0xB48	OTG_FS_DOEPINT2	Reserved																		NAK	BERR	Reserved			OUTPKTERR	Reserved		STSPHSRX	OTEPDIS	STUP	Reserved	EPDISD	XFRC
	Reset value																			0	0				0			0	0	0		0	0
0xB68	OTG_FS_DOEPINT3	Reserved																		NAK	BERR	Reserved			OUTPKTERR	Reserved		STSPHSRX	OTEPDIS	STUP	Reserved	EPDISD	XFRC
	Reset value																			0	0				0			0	0	0		0	0
0x910	OTG_FS_DIEPTSIZ0	Reserved											PKTCNT		Reserved												XFRSIZ						
	Reset value												0	0													0	0	0	0	0	0	0
0x930	OTG_FS_DIEPTSIZ1	Reserved			PKTCNT										XFRSIZ																		
	Reset value				0	0	0	0	0	0	0	0	0	0	0	0	0	0	0	0	0	0	0	0	0	0	0	0	0	0	0	0	0
0x950	OTG_FS_DIEPTSIZ2	Reserved			PKTCNT										XFRSIZ																		
	Reset value				0	0	0	0	0	0	0	0	0	0	0	0	0	0	0	0	0	0	0	0	0	0	0	0	0	0	0	0	0
0x970	OTG_FS_DIEPTSIZ3	Reserved			PKTCNT										XFRSIZ																		
	Reset value				0	0	0	0	0	0	0	0	0	0	0	0	0	0	0	0	0	0	0	0	0	0	0	0	0	0	0	0	0

Table 205. OTG_FS register map and reset values (continued)

Offset	Register	31	30	29	28	27	26	25	24	23	22	21	20	19	18	17	16	15	14	13	12	11	10	9	8	7	6	5	4	3	2	1	0
0xB10	**OTG_FS_DOEPTSIZ0**	Reserved	STUPCNT		Reserved									PKTCNT	Reserved												XFRSIZ						
	Reset value		0	0										0													0	0	0	0	0	0	0
0xB30	**OTG_FS_DOEPTSIZ1**	Reserved	RXDPID/STUPCNT		PKTCNT										XFRSIZ																		
	Reset value		0	0	0	0	0	0	0	0	0	0	0	0	0	0	0	0	0	0	0	0	0	0	0	0	0	0	0	0	0	0	0
0xB50	**OTG_FS_DOEPTSIZ2**	Reserved	RXDPID/STUPCNT		PKTCNT										XFRSIZ																		
	Reset value		0	0	0	0	0	0	0	0	0	0	0	0	0	0	0	0	0	0	0	0	0	0	0	0	0	0	0	0	0	0	0
0xB70	**OTG_FS_DOEPTSIZ3**	Reserved	RXDPID/STUPCNT		PKTCNT										XFRSIZ																		
	Reset value		0	0	0	0	0	0	0	0	0	0	0	0	0	0	0	0	0	0	0	0	0	0	0	0	0	0	0	0	0	0	0
0xE00	**OTG_FS_PCGCCTL**	Reserved																											PHYSUSP	Reserved		GATEHCLK	STPPCLK
	Reset value																																

Refer to *Section 2.3: Memory map* for the register boundary addresses.

34.17 OTG_FS programming model

34.17.1 Core initialization

The application must perform the core initialization sequence. If the cable is connected during power-up, the current mode of operation bit in the OTG_FS_GINTSTS (CMOD bit in OTG_FS_GINTSTS) reflects the mode. The OTG_FS controller enters host mode when an “A” plug is connected or device mode when a “B” plug is connected.

This section explains the initialization of the OTG_FS controller after power-on. The application must follow the initialization sequence irrespective of host or device mode operation. All core global registers are initialized according to the core’s configuration:

1. Program the following fields in the OTG_FS_GAHBCFG register:
   - Global interrupt mask bit GINTMSK = 1
   - RxFIFO non-empty (RXFLVL bit in OTG_FS_GINTSTS)
   - Periodic TxFIFO empty level
2. Program the following fields in the OTG_FS_GUSBCFG register:
   - HNP capable bit
   - SRP capable bit
   - FS timeout calibration field
   - USB turnaround time field
3. The software must unmask the following bits in the OTG_FS_GINTMSK register:

   OTG interrupt mask

   Mode mismatch interrupt mask
4. The software can read the CMOD bit in OTG_FS_GINTSTS to determine whether the OTG_FS controller is operating in host or device mode.

34.17.2 Host initialization

To initialize the core as host, the application must perform the following steps:

1. Program the HPRTINT in the OTG_FS_GINTMSK register to unmask
2. Program the OTG_FS_HCFG register to select full-speed host
3. Program the PPWR bit in OTG_FS_HPRT to 1. This drives V_{BUS} on the USB.
4. Wait for the PCDET interrupt in OTG_FS_HPRT0. This indicates that a device is connecting to the port.
5. Program the PRST bit in OTG_FS_HPRT to 1. This starts the reset process.
6. Wait at least 10 ms for the reset process to complete.
7. Program the PRST bit in OTG_FS_HPRT to 0.
8. Wait for the PENCHNG interrupt in OTG_FS_HPRT.
9. Read the PSPD bit in OTG_FS_HPRT to get the enumerated speed.
10. Program the HFIR register with a value corresponding to the selected PHY clock 1
11. Program the FSLSPCS field in the OTG_FS_HCFG register following the speed of the device detected in step 9. If FSLSPCS has been changed a port reset must be performed.
12. Program the OTG_FS_GRXFSIZ register to select the size of the receive FIFO.
13. Program the OTG_FS_HNPTXFSIZ register to select the size and the start address of the Non-periodic transmit FIFO for non-periodic transactions.
14. Program the OTG_FS_HPTXFSIZ register to select the size and start address of the periodic transmit FIFO for periodic transactions.

To communicate with devices, the system software must initialize and enable at least one channel.

34.17.3 Device initialization

The application must perform the following steps to initialize the core as a device on power-up or after a mode change from host to device.

1. Program the following fields in the OTG_FS_DCFG register:
   - Device speed
   - Non-zero-length status OUT handshake
2. Program the OTG_FS_GINTMSK register to unmask the following interrupts:
   - USB reset
   - Enumeration done
   - Early suspend
   - USB suspend
   - SOF
3. Program the VBUSBSEN bit in the OTG_FS_GCCFG register to enable V_{BUS} sensing in “B” device mode and supply the 5 volts across the pull-up resistor on the DP line.
4. Wait for the USBRST interrupt in OTG_FS_GINTSTS. It indicates that a reset has been detected on the USB that lasts for about 10 ms on receiving this interrupt.

Wait for the ENUMDNE interrupt in OTG_FS_GINTSTS. This interrupt indicates the end of reset on the USB. On receiving this interrupt, the application must read the OTG_FS_DSTS

register to determine the enumeration speed and perform the steps listed in *Endpoint initialization on enumeration completion on page 1353*.

At this point, the device is ready to accept SOF packets and perform control transfers on control endpoint 0.

34.17.4 Host programming model

Channel initialization

The application must initialize one or more channels before it can communicate with connected devices. To initialize and enable a channel, the application must perform the following steps:

1. Program the OTG_FS_GINTMSK register to unmask the following:
2. Channel interrupt
   - Non-periodic transmit FIFO empty for OUT transactions (applicable when operating in pipelined transaction-level with the packet count field programmed with more than one).
   - Non-periodic transmit FIFO half-empty for OUT transactions (applicable when operating in pipelined transaction-level with the packet count field programmed with more than one).
3. Program the OTG_FS_HAINTMSK register to unmask the selected channels' interrupts.
4. Program the OTG_FS_HCINTMSK register to unmask the transaction-related interrupts of interest given in the host channel interrupt register.
5. Program the selected channel's OTG_FS_HCTSIZx register with the total transfer size, in bytes, and the expected number of packets, including short packets. The application must program the PID field with the initial data PID (to be used on the first OUT transaction or to be expected from the first IN transaction).
6. Program the OTG_FS_HCCHARx register of the selected channel with the device's endpoint characteristics, such as type, speed, direction, and so forth. (The channel can be enabled by setting the channel enable bit to 1 only when the application is ready to transmit or receive any packet).

Halting a channel

The application can disable any channel by programming the OTG_FS_HCCHARx register with the CHDIS and CHENA bits set to 1. This enables the OTG_FS host to flush the posted requests (if any) and generates a channel halted interrupt. The application must wait for the CHH interrupt in OTG_FS_HCINTx before reallocating the channel for other transactions. The OTG_FS host does not interrupt the transaction that has already been started on the USB.

Before disabling a channel, the application must ensure that there is at least one free space available in the non-periodic request queue (when disabling a non-periodic channel) or the periodic request queue (when disabling a periodic channel). The application can simply flush the posted requests when the Request queue is full (before disabling the channel), by programming the OTG_FS_HCCHARx register with the CHDIS bit set to 1, and the CHENA bit cleared to 0.

The application is expected to disable a channel on any of the following conditions:

1. When an STALL, TXERR, BBERR or DTERR interrupt in OTG_FS_HCINTx is received for an IN or OUT channel. The application must be able to receive other interrupts (DTERR, Nak, Data, TXERR) for the same channel before receiving the halt.
2. When a DISCINT (Disconnect Device) interrupt in OTG_FS_GINTSTS is received. (The application is expected to disable all enabled channels).
3. When the application aborts a transfer before normal completion.

Operational model

The application must initialize a channel before communicating to the connected device. This section explains the sequence of operation to be performed for different types of USB transactions.

- **Writing the transmit FIFO**

  The OTG_FS host automatically writes an entry (OUT request) to the periodic/non-periodic request queue, along with the last word write of a packet. The application must ensure that at least one free space is available in the periodic/non-periodic request queue before starting to write to the transmit FIFO. The application must always write to the transmit FIFO in words. If the packet size is non-word aligned, the application must use padding. The OTG_FS host determines the actual packet size based on the programmed maximum packet size and transfer size.

Figure 396. Transmit FIFO write task

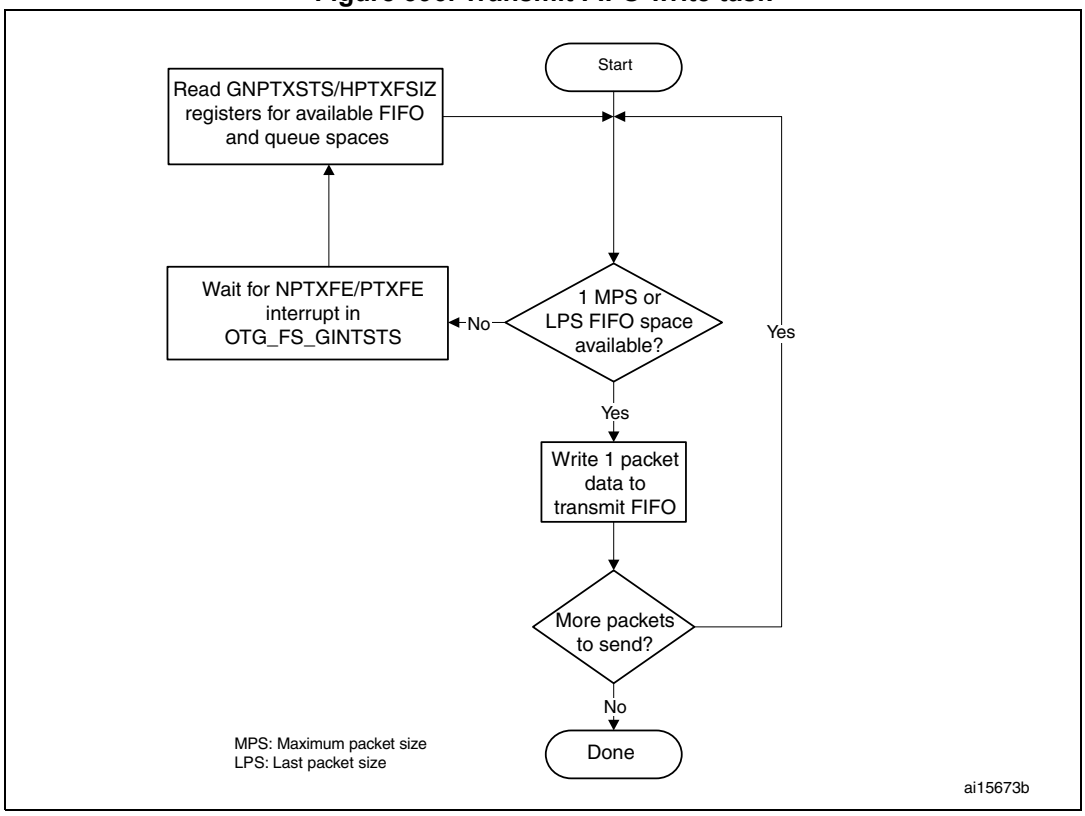

- **Reading the receive FIFO**

The application must ignore all packet statuses other than IN data packet (bx0010).

Figure 397. Receive FIFO read task

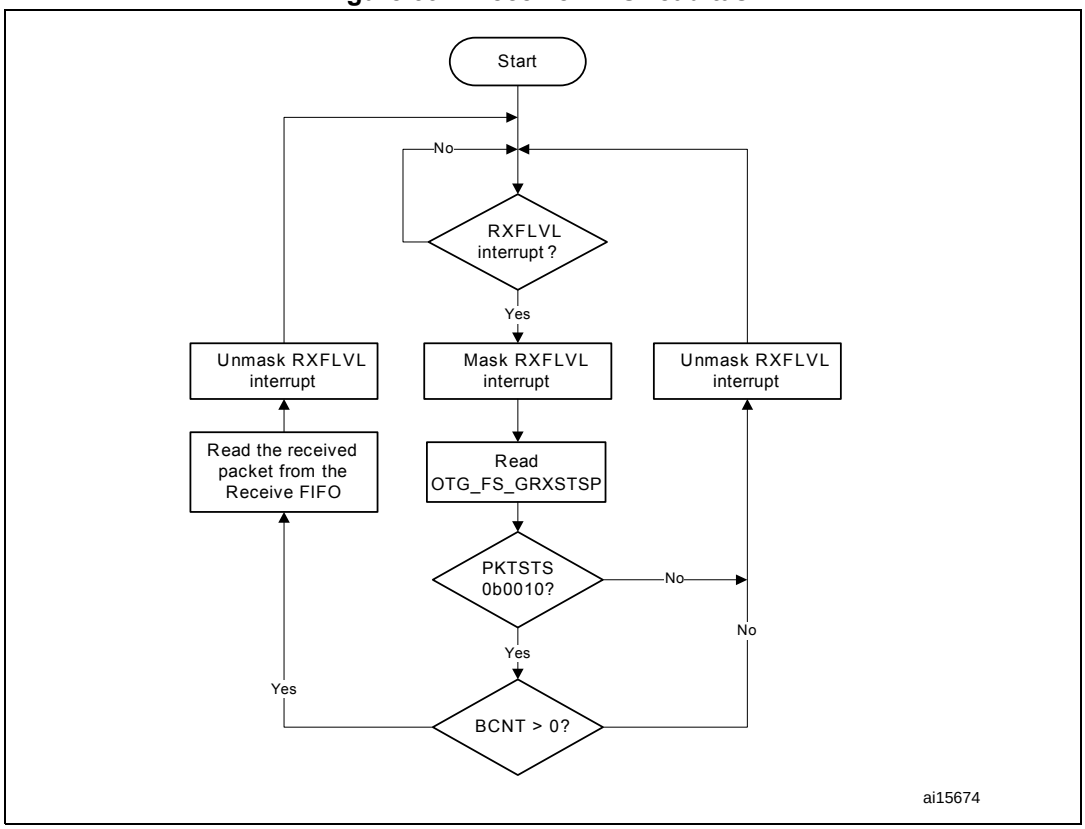

- **Bulk and control OUT/SETUP transactions**

  A typical bulk or control OUT/SETUP pipelined transaction-level operation is shown in *Figure 398*. See channel 1 (ch_1). Two bulk OUT packets are transmitted. A control SETUP transaction operates in the same way but has only one packet. The assumptions are:

  – The application is attempting to send two maximum-packet-size packets (transfer size = 1, 024 bytes).

  – The non-periodic transmit FIFO can hold two packets (128 bytes for FS).

  – The non-periodic request queue depth = 4.

- **Normal bulk and control OUT/SETUP operations**

  The sequence of operations in (channel 1) is as follows:

  a) Initialize channel 1

  b) Write the first packet for channel 1

  c) Along with the last word write, the core writes an entry to the non-periodic request queue

  d) As soon as the non-periodic queue becomes non-empty, the core attempts to send an OUT token in the current frame

  e) Write the second (last) packet for channel 1

  f) The core generates the XFRC interrupt as soon as the last transaction is completed successfully

g) In response to the XFRC interrupt, de-allocate the channel for other transfers

h) Handling non-ACK responses

Figure 398. Normal bulk/control OUT/SETUP and bulk/control IN transactions

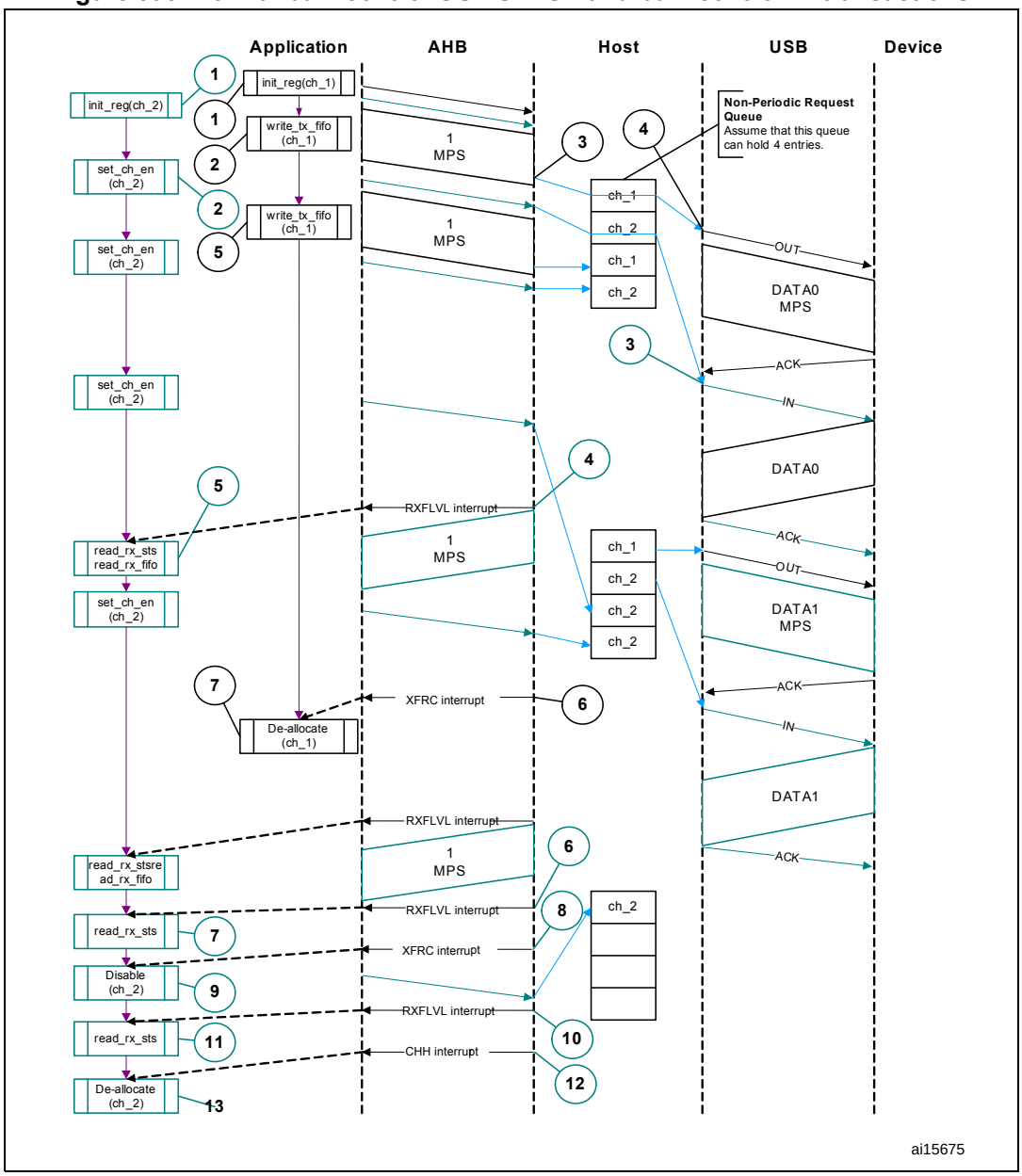

The channel-specific interrupt service routine for bulk and control OUT/SETUP transactions is shown in the following code samples.

- **Interrupt service routine for bulk/control OUT/SETUP and bulk/control IN transactions**

  a) Bulk/Control OUT/SETUP

```
Unmask (NAK/TXERR/STALL/XFRC)
if (XFRC)
  {
```

```
   Reset Error Count
   Mask ACK
   De-allocate Channel
   }
else if (STALL)
   {
   Transfer Done = 1
   Unmask CHH
   Disable Channel
   }
else if (NAK or TXERR )
   {
   Rewind Buffer Pointers
   Unmask CHH
   Disable Channel
   if (TXERR)
      {
      Increment Error Count
      Unmask ACK
      }
   else
      {
      Reset Error Count
      }
      }
else if (CHH)
   {
   Mask CHH
   if (Transfer Done or (Error_count == 3))
      {
      De-allocate Channel
      }
   else
      {
      Re-initialize Channel
      }
   }
   else if (ACK)
      {
      Reset Error Count
      Mask ACK
      }
```

The application is expected to write the data packets into the transmit FIFO as and when the space is available in the transmit FIFO and the Request queue. The application can make use of the NPTXFE interrupt in OTG_FS_GINTSTS to find the transmit FIFO space.

b) Bulk/Control IN

```
Unmask (TXERR/XFRC/BBERR/STALL/DTERR)
if (XFRC)
   {
   Reset Error Count
```

```
   Unmask CHH
   Disable Channel
   Reset Error Count
   Mask ACK
   }
else if (TXERR or BBERR or STALL)
   {
   Unmask CHH
   Disable Channel
   if (TXERR)
      {
      Increment Error Count
      Unmask ACK
      }
   }
else if (CHH)
   {
   Mask CHH
   if (Transfer Done or (Error_count == 3))
      {
      De-allocate Channel
      }
   else
      {
      Re-initialize Channel
      }
   }
else if (ACK)
   {
   Reset Error Count
   Mask ACK
   }
else if (DTERR)
   {
   Reset Error Count
   }
```

The application is expected to write the requests as and when the Request queue space is available and until the XFRC interrupt is received.

- **Bulk and control IN transactions**

  A typical bulk or control IN pipelined transaction-level operation is shown in *Figure 399*. See channel 2 (ch_2). The assumptions are:

  – The application is attempting to receive two maximum-packet-size packets (transfer size = 1 024 bytes).

  – The receive FIFO can contain at least one maximum-packet-size packet and two status words per packet (72 bytes for FS).

  – The non-periodic request queue depth = 4.

Figure 399. Bulk/control IN transactions

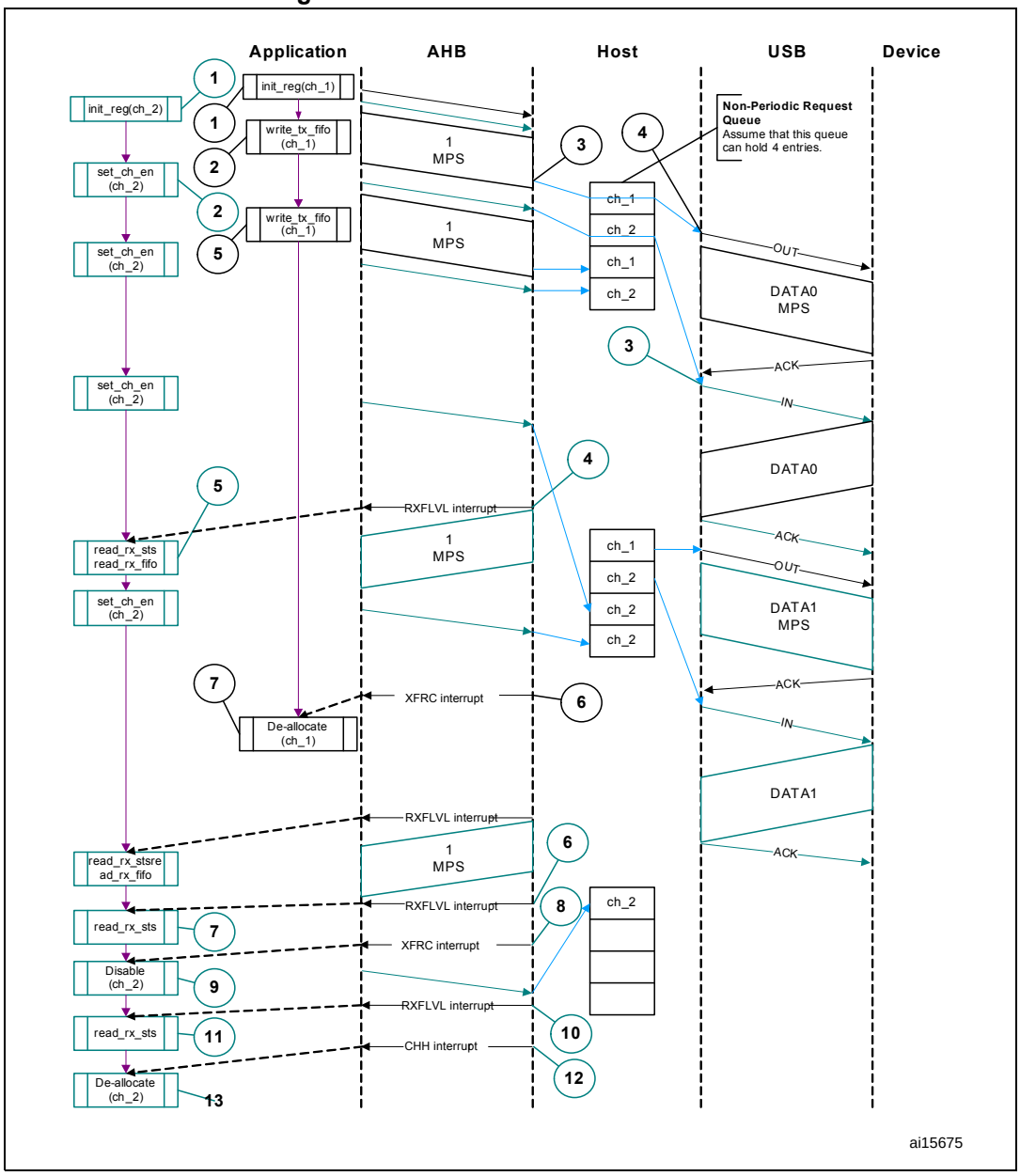

The sequence of operations is as follows:

a) Initialize channel 2.

b) Set the CHENA bit in HCCHAR2 to write an IN request to the non-periodic request queue.

c) The core attempts to send an IN token after completing the current OUT transaction.

d) The core generates an RXFLVL interrupt as soon as the received packet is written to the receive FIFO.

e) In response to the RXFLVL interrupt, mask the RXFLVL interrupt and read the received packet status to determine the number of bytes received, then read the receive FIFO accordingly. Following this, unmask the RXFLVL interrupt.

f) The core generates the RXFLVL interrupt for the transfer completion status entry in the receive FIFO.

g) The application must read and ignore the receive packet status when the receive packet status is not an IN data packet (PKTSTS in GRXSTSR ≠ 0b0010).

h) The core generates the XFRC interrupt as soon as the receive packet status is read.

i) In response to the XFRC interrupt, disable the channel and stop writing the OTG_FS_HCCHAR2 register for further requests. The core writes a channel disable request to the non-periodic request queue as soon as the OTG_FS_HCCHAR2 register is written.

j) The core generates the RXFLVL interrupt as soon as the halt status is written to the receive FIFO.

k) Read and ignore the receive packet status.

l) The core generates a CHH interrupt as soon as the halt status is popped from the receive FIFO.

m) In response to the CHH interrupt, de-allocate the channel for other transfers.

n) Handling non-ACK responses

- **Control transactions**

  Setup, Data, and Status stages of a control transfer must be performed as three separate transfers. Setup-, Data- or Status-stage OUT transactions are performed similarly to the bulk OUT transactions explained previously. Data- or Status-stage IN transactions are performed similarly to the bulk IN transactions explained previously. For all three stages, the application is expected to set the EPTYP field in OTG_FS_HCCHAR1 to Control. During the Setup stage, the application is expected to set the PID field in OTG_FS_HCTSIZ1 to SETUP.

- **Interrupt OUT transactions**

  A typical interrupt OUT operation is shown in *Figure 400*. The assumptions are:

  – The application is attempting to send one packet in every frame (up to 1 maximum packet size), starting with the odd frame (transfer size = 1 024 bytes)

  – The periodic transmit FIFO can hold one packet (1 KB)

  – Periodic request queue depth = 4

  The sequence of operations is as follows:

  a) Initialize and enable channel 1. The application must set the ODDFRM bit in OTG_FS_HCCHAR1.

  b) Write the first packet for channel 1.

  c) Along with the last word write of each packet, the OTG_FS host writes an entry to the periodic request queue.

  d) The OTG_FS host attempts to send an OUT token in the next (odd) frame.

  e) The OTG_FS host generates an XFRC interrupt as soon as the last packet is transmitted successfully.

  f) In response to the XFRC interrupt, reinitialize the channel for the next transfer.

Figure 400. Normal interrupt OUT/IN transactions

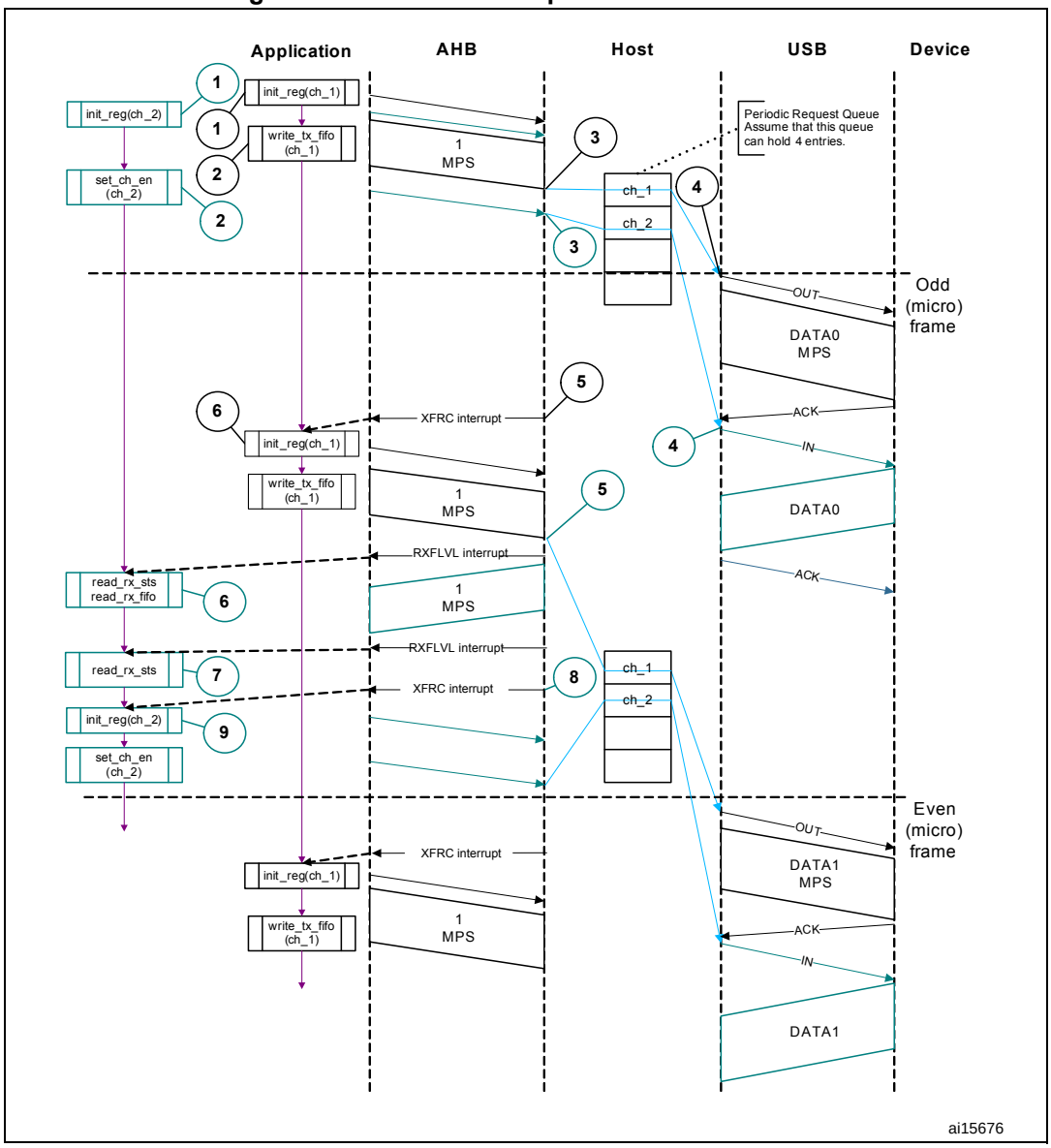

- **Interrupt service routine for interrupt OUT/IN transactions**

  a) Interrupt OUT

```
Unmask (NAK/TXERR/STALL/XFRC/FRMOR)
if (XFRC)
  {
  Reset Error Count
  Mask ACK
  De-allocate Channel
  }
else
  if (STALL or FRMOR)
    {
    Mask ACK
    Unmask CHH
```

```
      Disable Channel
      if (STALL)
        {
        Transfer Done = 1
        }
      }
    else
      if (NAK or TXERR)
        {
        Rewind Buffer Pointers
        Reset Error Count
        Mask ACK
        Unmask CHH
        Disable Channel
        }
      else
        if (CHH)
        {
        Mask CHH
        if (Transfer Done or (Error_count == 3))
          {
          De-allocate Channel
          }
        else
          {
          Re-initialize Channel (in next b_interval - 1 Frame)
          }
        }
      else
        if (ACK)
        {
        Reset Error Count
        Mask ACK
        }
```

The application uses the NPTXFE interrupt in OTG_FS_GINTSTS to find the transmit FIFO space.

b) Interrupt IN

```
Unmask (NAK/TXERR/XFRC/BBERR/STALL/FRMOR/DTERR)
if (XFRC)
  {
  Reset Error Count
  Mask ACK
  if (OTG_FS_HCTSIZx.PKTCNT == 0)
    {
    De-allocate Channel
    }
  else
    {
    Transfer Done = 1
    Unmask CHH
    Disable Channel
```

```
        }
      }
    else
      if (STALL or FRMOR or NAK or DTERR or BBERR)
        {
        Mask ACK
        Unmask CHH
        Disable Channel
        if (STALL or BBERR)
          {
          Reset Error Count
          Transfer Done = 1
          }
        else
          if (!FRMOR)
          {
          Reset Error Count
          }
        }
    else
      if (TXERR)
        {
        Increment Error Count
        Unmask ACK
        Unmask CHH
        Disable Channel
        }
    else
      if (CHH)
        {
        Mask CHH
        if (Transfer Done or (Error_count == 3))
          {
          De-allocate Channel
          }
        else
          Re-initialize Channel (in next b_interval - 1 /Frame)
        }
      }
    else
      if (ACK)
        {
        Reset Error Count
        Mask ACK
```

}

- **Interrupt IN transactions**

  The assumptions are:

  – The application is attempting to receive one packet (up to 1 maximum packet size) in every frame, starting with odd (transfer size = 1 024 bytes).

  – The receive FIFO can hold at least one maximum-packet-size packet and two status words per packet (1 031 bytes).

  – Periodic request queue depth = 4.

- **Normal interrupt IN operation**

  The sequence of operations is as follows:

  a) Initialize channel 2. The application must set the ODDFRM bit in OTG_FS_HCCHAR2.

  b) Set the CHENA bit in OTG_FS_HCCHAR2 to write an IN request to the periodic request queue.

  c) The OTG_FS host writes an IN request to the periodic request queue for each OTG_FS_HCCHAR2 register write with the CHENA bit set.

  d) The OTG_FS host attempts to send an IN token in the next (odd) frame.

  e) As soon as the IN packet is received and written to the receive FIFO, the OTG_FS host generates an RXFLVL interrupt.

  f) In response to the RXFLVL interrupt, read the received packet status to determine the number of bytes received, then read the receive FIFO accordingly. The application must mask the RXFLVL interrupt before reading the receive FIFO, and unmask after reading the entire packet.

  g) The core generates the RXFLVL interrupt for the transfer completion status entry in the receive FIFO. The application must read and ignore the receive packet status when the receive packet status is not an IN data packet (PKTSTS in GRXSTSR ≠ 0b0010).

  h) The core generates an XFRC interrupt as soon as the receive packet status is read.

  i) In response to the XFRC interrupt, read the PKTCNT field in OTG_FS_HCTSIZ2. If the PKTCNT bit in OTG_FS_HCTSIZ2 is not equal to 0, disable the channel before re-initializing the channel for the next transfer, if any). If PKTCNT bit in

OTG_FS_HCTSIZ2 = 0, reinitialize the channel for the next transfer. This time, the application must reset the ODDFRM bit in OTG_FS_HCCHAR2.

- **Isochronous OUT transactions**

  A typical isochronous OUT operation is shown in *Figure 401*. The assumptions are:

  – The application is attempting to send one packet every frame (up to 1 maximum packet size), starting with an odd frame. (transfer size = 1 024 bytes).

  – The periodic transmit FIFO can hold one packet (1 KB).

  – Periodic request queue depth = 4.

  The sequence of operations is as follows:

  a) Initialize and enable channel 1. The application must set the ODDFRM bit in OTG_FS_HCCHAR1.

  b) Write the first packet for channel 1.

  c) Along with the last word write of each packet, the OTG_FS host writes an entry to the periodic request queue.

  d) The OTG_FS host attempts to send the OUT token in the next frame (odd).

  e) The OTG_FS host generates the XFRC interrupt as soon as the last packet is transmitted successfully.

  f) In response to the XFRC interrupt, reinitialize the channel for the next transfer.

  g) Handling non-ACK responses

Figure 401. Normal isochronous OUT/IN transactions

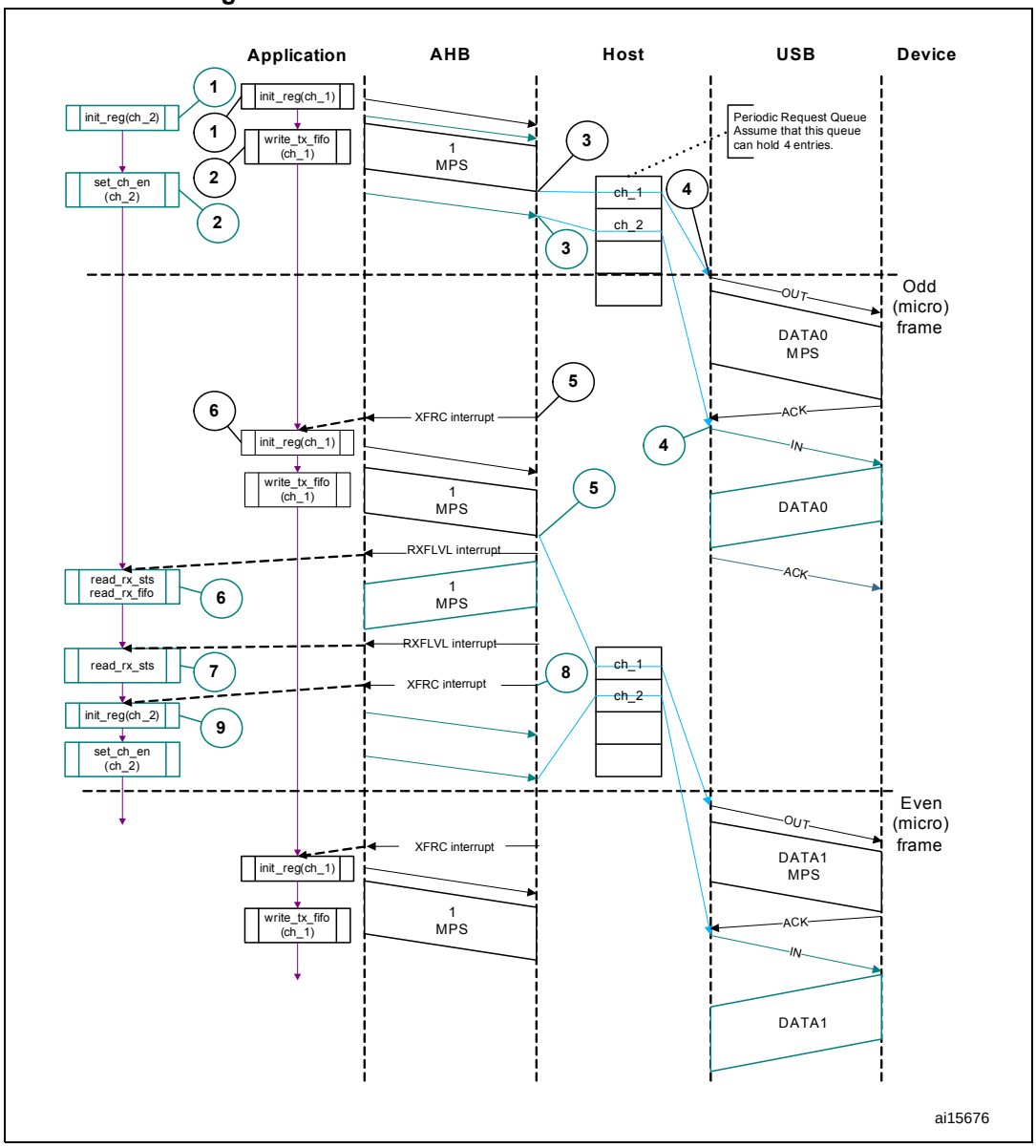

- **Interrupt service routine for isochronous OUT/IN transactions**

  Code sample: Isochronous OUT

```
Unmask (FRMOR/XFRC)
if (XFRC)
   {
   De-allocate Channel
   }
else
   if (FRMOR)
      {
      Unmask CHH
      Disable Channel
      }
```

```
   else
   if (CHH)
     {
     Mask CHH
     De-allocate Channel
     }
```

Code sample: Isochronous IN

```
Unmask (TXERR/XFRC/FRMOR/BBERR)
if (XFRC or FRMOR)
   {
   if (XFRC and (OTG_FS_HCTSIZx.PKTCNT == 0))
     {
     Reset Error Count
     De-allocate Channel
     }
   else
     {
     Unmask CHH
     Disable Channel
     }
   }
   else
     if (TXERR or BBERR)
       {
       Increment Error Count
       Unmask CHH
       Disable Channel
       }
     else
       if (CHH)
         {
         Mask CHH
         if (Transfer Done or (Error_count == 3))
           {
           De-allocate Channel
           }
         else
           {
           Re-initialize Channel
           }
         }
```

- **Isochronous IN transactions**

  The assumptions are:

  – The application is attempting to receive one packet (up to 1 maximum packet size) in every frame starting with the next odd frame (transfer size = 1 024 bytes).

  – The receive FIFO can hold at least one maximum-packet-size packet and two status word per packet (1 031 bytes).

  – Periodic request queue depth = 4.

  The sequence of operations is as follows:

  a) Initialize channel 2. The application must set the ODDFRM bit in OTG_FS_HCCHAR2.

  b) Set the CHENA bit in OTG_FS_HCCHAR2 to write an IN request to the periodic request queue.

  c) The OTG_FS host writes an IN request to the periodic request queue for each OTG_FS_HCCHAR2 register write with the CHENA bit set.

  d) The OTG_FS host attempts to send an IN token in the next odd frame.

  e) As soon as the IN packet is received and written to the receive FIFO, the OTG_FS host generates an RXFLVL interrupt.

  f) In response to the RXFLVL interrupt, read the received packet status to determine the number of bytes received, then read the receive FIFO accordingly. The application must mask the RXFLVL interrupt before reading the receive FIFO, and unmask it after reading the entire packet.

  g) The core generates an RXFLVL interrupt for the transfer completion status entry in the receive FIFO. This time, the application must read and ignore the receive packet status when the receive packet status is not an IN data packet (PKTSTS bit in OTG_FS_GRXSTSR ≠ 0b0010).

  h) The core generates an XFRC interrupt as soon as the receive packet status is read.

  i) In response to the XFRC interrupt, read the PKTCNT field in OTG_FS_HCTSIZ2. If PKTCNT ≠ 0 in OTG_FS_HCTSIZ2, disable the channel before re-initializing the channel for the next transfer, if any. If PKTCNT = 0 in OTG_FS_HCTSIZ2, reinitialize the channel for the next transfer. This time, the application must reset the ODDFRM bit in OTG_FS_HCCHAR2.

- **Selecting the queue depth**

  Choose the periodic and non-periodic request queue depths carefully to match the number of periodic/non-periodic endpoints accessed.

  The non-periodic request queue depth affects the performance of non-periodic transfers. The deeper the queue (along with sufficient FIFO size), the more often the core is able to pipeline non-periodic transfers. If the queue size is small, the core is able to put in new requests only when the queue space is freed up.

  The core's periodic request queue depth is critical to perform periodic transfers as scheduled. Select the periodic queue depth, based on the number of periodic transfers scheduled in a microframe. If the periodic request queue depth is smaller than the periodic transfers scheduled in a microframe, a frame overrun condition occurs.

- **Handling babble conditions**

  OTG_FS controller handles two cases of babble: packet babble and port babble. Packet babble occurs if the device sends more data than the maximum packet size for

the channel. Port babble occurs if the core continues to receive data from the device at EOF2 (the end of frame 2, which is very close to SOF).

When OTG_FS controller detects a packet babble, it stops writing data into the Rx buffer and waits for the end of packet (EOP). When it detects an EOP, it flushes already written data in the Rx buffer and generates a Babble interrupt to the application.

When OTG_FS controller detects a port babble, it flushes the RxFIFO and disables the port. The core then generates a Port disabled interrupt (HPRTINT in OTG_FS_GINTSTS, PENCHNG in OTG_FS_HPRT). On receiving this interrupt, the application must determine that this is not due to an overcurrent condition (another cause of the Port Disabled interrupt) by checking POCA in OTG_FS_HPRT, then perform a soft reset. The core does not send any more tokens after it has detected a port babble condition.

34.17.5 Device programming model

Endpoint initialization on USB reset

1. Set the NAK bit for all OUT endpoints
   - SNAK = 1 in OTG_FS_DOEPCTLx (for all OUT endpoints)
2. Unmask the following interrupt bits
   - INEP0 = 1 in OTG_FS_DAINTMSK (control 0 IN endpoint)
   - OUTEP0 = 1 in OTG_FS_DAINTMSK (control 0 OUT endpoint)
   - STUP = 1 in DOEPMSK
   - XFRC = 1 in DOEPMSK
   - XFRC = 1 in DIEPMSK
   - TOC = 1 in DIEPMSK
3. Set up the Data FIFO RAM for each of the FIFOs
   - Program the OTG_FS_GRXFSIZ register, to be able to receive control OUT data and setup data. If thresholding is not enabled, at a minimum, this must be equal to 1 max packet size of control endpoint 0 + 2 words (for the status of the control OUT data packet) + 10 words (for setup packets).
   - Program the OTG_FS_TX0FSIZ register (depending on the FIFO number chosen) to be able to transmit control IN data. At a minimum, this must be equal to 1 max packet size of control endpoint 0.
4. Program the following fields in the endpoint-specific registers for control OUT endpoint 0 to receive a SETUP packet
   - STUPCNT = 3 in OTG_FS_DOEPTSIZ0 (to receive up to 3 back-to-back SETUP packets)

At this point, all initialization required to receive SETUP packets is done.

Endpoint initialization on enumeration completion

1. On the Enumeration Done interrupt (ENUMDNE in OTG_FS_GINTSTS), read the OTG_FS_DSTS register to determine the enumeration speed.
2. Program the MPSIZ field in OTG_FS_DIEPCTL0 to set the maximum packet size. This step configures control endpoint 0. The maximum packet size for a control endpoint depends on the enumeration speed.

At this point, the device is ready to receive SOF packets and is configured to perform control transfers on control endpoint 0.

Endpoint initialization on SetAddress command

This section describes what the application must do when it receives a SetAddress command in a SETUP packet.

1. Program the OTG_FS_DCFG register with the device address received in the SetAddress command
2. Program the core to send out a status IN packet

Endpoint initialization on SetConfiguration/SetInterface command

This section describes what the application must do when it receives a SetConfiguration or SetInterface command in a SETUP packet.

1. When a SetConfiguration command is received, the application must program the endpoint registers to configure them with the characteristics of the valid endpoints in the new configuration.
2. When a SetInterface command is received, the application must program the endpoint registers of the endpoints affected by this command.
3. Some endpoints that were active in the prior configuration or alternate setting are not valid in the new configuration or alternate setting. These invalid endpoints must be deactivated.
4. Unmask the interrupt for each active endpoint and mask the interrupts for all inactive endpoints in the OTG_FS_DAINTMSK register.
5. Set up the Data FIFO RAM for each FIFO.
6. After all required endpoints are configured; the application must program the core to send a status IN packet.

At this point, the device core is configured to receive and transmit any type of data packet.

Endpoint activation

This section describes the steps required to activate a device endpoint or to configure an existing device endpoint to a new type.

1. Program the characteristics of the required endpoint into the following fields of the OTG_FS_DIEPCTLx register (for IN or bidirectional endpoints) or the OTG_FS_DOEPCTLx register (for OUT or bidirectional endpoints).
   - Maximum packet size
   - USB active endpoint = 1
   - Endpoint start data toggle (for interrupt and bulk endpoints)
   - Endpoint type
   - TxFIFO number
2. Once the endpoint is activated, the core starts decoding the tokens addressed to that endpoint and sends out a valid handshake for each valid token received for the endpoint.

Endpoint deactivation

This section describes the steps required to deactivate an existing endpoint.

1. In the endpoint to be deactivated, clear the USB active endpoint bit in the OTG_FS_DIEPCTLx register (for IN or bidirectional endpoints) or the OTG_FS_DOEPCTLx register (for OUT or bidirectional endpoints).
2. Once the endpoint is deactivated, the core ignores tokens addressed to that endpoint, which results in a timeout on the USB.

Note: The application must meet the following conditions to set up the device core to handle traffic:
NPTXFEM and RXFLVLM in the OTG_FS_GINTMSK register must be cleared.

34.17.6 Operational model

SETUP and OUT data transfers

This section describes the internal data flow and application-level operations during data OUT transfers and SETUP transactions.

- **Packet read**

This section describes how to read packets (OUT data and SETUP packets) from the receive FIFO.

1. On catching an RXFLVL interrupt (OTG_FS_GINTSTS register), the application must read the Receive status pop register (OTG_FS_GRXSTSP).
2. The application can mask the RXFLVL interrupt (in OTG_FS_GINTSTS) by writing to RXFLVL = 0 (in OTG_FS_GINTMSK), until it has read the packet from the receive FIFO.
3. If the received packet's byte count is not 0, the byte count amount of data is popped from the receive Data FIFO and stored in memory. If the received packet byte count is 0, no data is popped from the receive data FIFO.
4. The receive FIFO's packet status readout indicates one of the following:
   a) Global OUT NAK pattern:
   PKTSTS = Global OUT NAK, BCNT = 0x000, EPNUM = Don't Care (0x0), DPID = Don't Care (0b00).
   These data indicate that the global OUT NAK bit has taken effect.
   b) SETUP packet pattern:
   PKTSTS = SETUP, BCNT = 0x008, EPNUM = Control EP Num, DPID = D0.
   These data indicate that a SETUP packet for the specified endpoint is now available for reading from the receive FIFO.
   c) Setup stage done pattern:
   PKTSTS = Setup Stage Done, BCNT = 0x0, EPNUM = Control EP Num, DPID = Don't Care (0b00).
   These data indicate that the Setup stage for the specified endpoint has completed and the Data stage has started. After this entry is popped from the receive FIFO, the core asserts a Setup interrupt on the specified control OUT endpoint.
   d) Data OUT packet pattern:
   PKTSTS = DataOUT, BCNT = size of the received data OUT packet (0 ≤ BCNT ≤ 1 024), EPNUM = EPNUM on which the packet was received, DPID = Actual Data PID.

e) Data transfer completed pattern:
PKTSTS = Data OUT Transfer Done, BCNT = 0x0, EPNUM = OUT EP Num on which the data transfer is complete, DPID = Don't Care (0b00).
These data indicate that an OUT data transfer for the specified OUT endpoint has completed. After this entry is popped from the receive FIFO, the core asserts a Transfer Completed interrupt on the specified OUT endpoint.

5. After the data payload is popped from the receive FIFO, the RXFLVL interrupt (OTG_FS_GINTSTS) must be unmasked.
6. Steps 1–5 are repeated every time the application detects assertion of the interrupt line due to RXFLVL in OTG_FS_GINTSTS. Reading an empty receive FIFO can result in undefined core behavior.

Figure 402 provides a flowchart of the above procedure.

Figure 402. Receive FIFO packet read

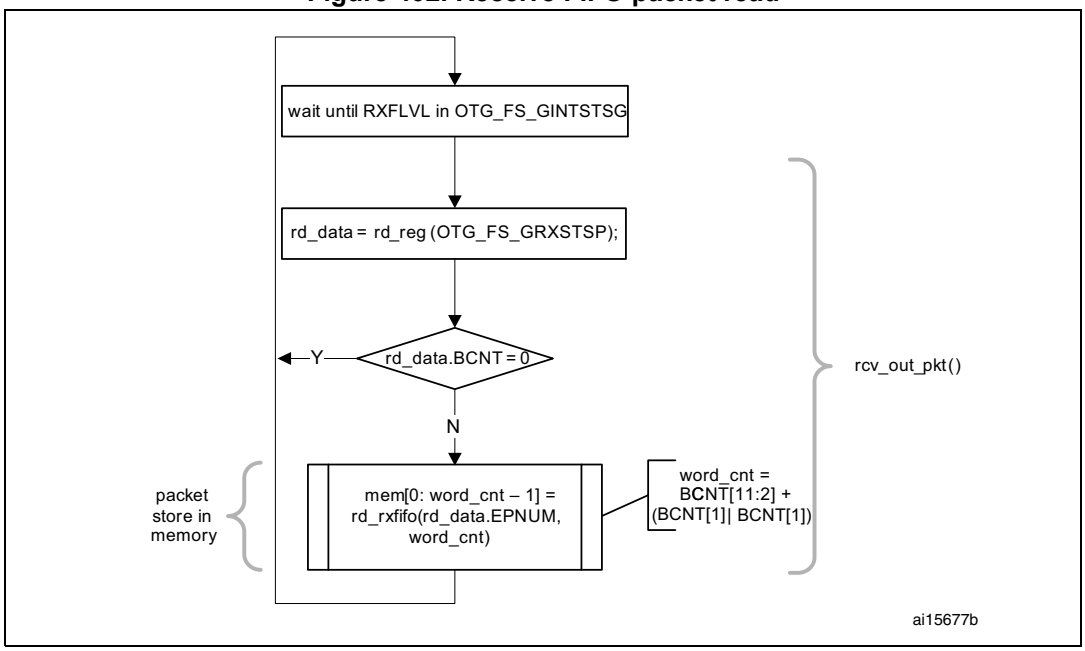

- **SETUP transactions**

This section describes how the core handles SETUP packets and the application's sequence for handling SETUP transactions.

- **Application requirements**

1. To receive a SETUP packet, the STUPCNT field (OTG_FS_DOEPTSIZx) in a control OUT endpoint must be programmed to a non-zero value. When the application programs the STUPCNT field to a non-zero value, the core receives SETUP packets and writes them to the receive FIFO, irrespective of the NAK status and EPENA bit setting in OTG_FS_DOEPCTLx. The STUPCNT field is decremented every time the control endpoint receives a SETUP packet. If the STUPCNT field is not programmed to a proper value before receiving a SETUP packet, the core still receives the SETUP packet and decrements the STUPCNT field, but the application may not be able to

determine the correct number of SETUP packets received in the Setup stage of a control transfer.

– STUPCNT = 3 in OTG_FS_DOEPTSIZx

2. The application must always allocate some extra space in the Receive data FIFO, to be able to receive up to three SETUP packets on a control endpoint.
   – The space to be reserved is 10 words. Three words are required for the first SETUP packet, 1 word is required for the Setup stage done word and 6 words are required to store two extra SETUP packets among all control endpoints.
   – 3 words per SETUP packet are required to store 8 bytes of SETUP data and 4 bytes of SETUP status (Setup packet pattern). The core reserves this space in the receive data FIFO to write SETUP data only, and never uses this space for data packets.
3. The application must read the 2 words of the SETUP packet from the receive FIFO.
4. The application must read and discard the Setup stage done word from the receive FIFO.

- **Internal data flow**

1. When a SETUP packet is received, the core writes the received data to the receive FIFO, without checking for available space in the receive FIFO and irrespective of the endpoint's NAK and STALL bit settings.
   – The core internally sets the IN NAK and OUT NAK bits for the control IN/OUT endpoints on which the SETUP packet was received.
2. For every SETUP packet received on the USB, 3 words of data are written to the receive FIFO, and the STUPCNT field is decremented by 1.
   – The first word contains control information used internally by the core
   – The second word contains the first 4 bytes of the SETUP command
   – The third word contains the last 4 bytes of the SETUP command
3. When the Setup stage changes to a Data IN/OUT stage, the core writes an entry (Setup stage done word) to the receive FIFO, indicating the completion of the Setup stage.
4. On the AHB side, SETUP packets are emptied by the application.
5. When the application pops the Setup stage done word from the receive FIFO, the core interrupts the application with an STUP interrupt (OTG_FS_DOEPINTx), indicating it can process the received SETUP packet.
   – The core clears the endpoint enable bit for control OUT endpoints.

- **Application programming sequence**

1. Program the OTG_FS_DOEPTSIZx register.
   – STUPCNT = 3
2. Wait for the RXFLVL interrupt (OTG_FS_GINTSTS) and empty the data packets from the receive FIFO.
3. Assertion of the STUP interrupt (OTG_FS_DOEPINTx) marks a successful completion of the SETUP Data Transfer.
   – On this interrupt, the application must read the OTG_FS_DOEPTSIZx register to determine the number of SETUP packets received and process the last received SETUP packet.

Figure 403. Processing a SETUP packet

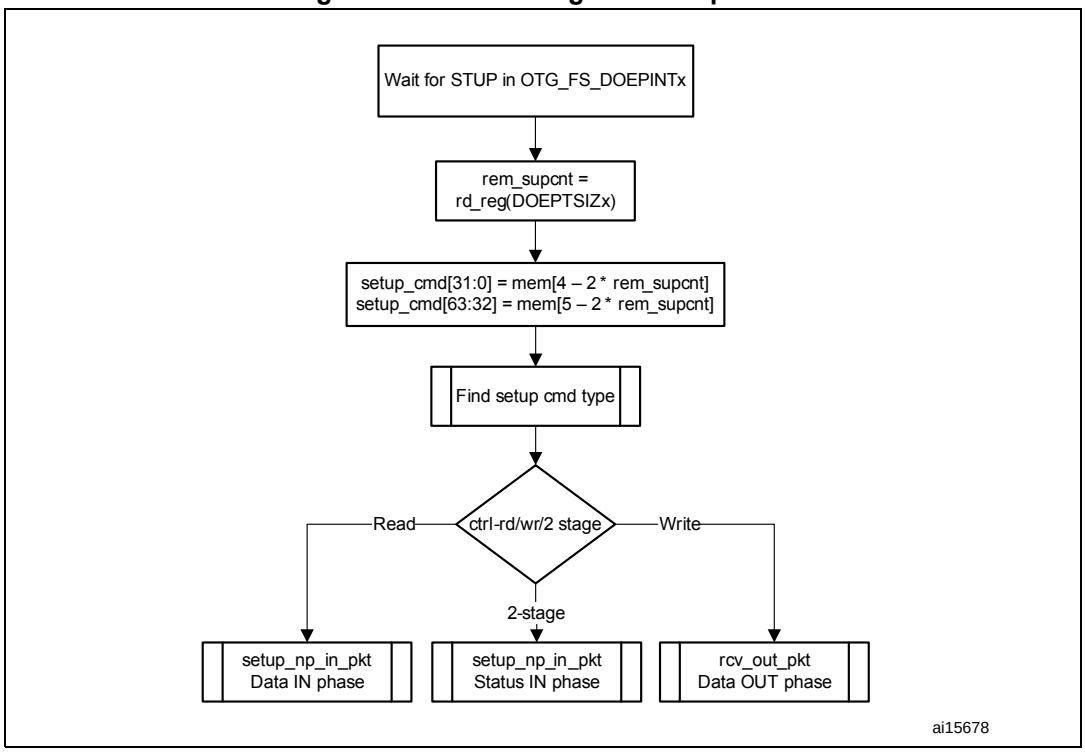

- **Handling more than three back-to-back SETUP packets**

Per the USB 2.0 specification, normally, during a SETUP packet error, a host does not send more than three back-to-back SETUP packets to the same endpoint. However, the USB 2.0 specification does not limit the number of back-to-back SETUP packets a host can send to the same endpoint. When this condition occurs, the OTG_FS controller generates an interrupt (B2BSTUP in OTG_FS_DOEPINTx).

- **Setting the global OUT NAK**

Internal data flow

1. When the application sets the Global OUT NAK (SGONAK bit in OTG_FS_DCTL), the core stops writing data, except SETUP packets, to the receive FIFO. Irrespective of the space availability in the receive FIFO, non-isochronous OUT tokens receive a NAK handshake response, and the core ignores isochronous OUT data packets
2. The core writes the Global OUT NAK pattern to the receive FIFO. The application must reserve enough receive FIFO space to write this data pattern.
3. When the application pops the Global OUT NAK pattern word from the receive FIFO, the core sets the GONAKEFF interrupt (OTG_FS_GINTSTS).
4. Once the application detects this interrupt, it can assume that the core is in Global OUT NAK mode. The application can clear this interrupt by clearing the SGONAK bit in OTG_FS_DCTL.

Application programming sequence

1. To stop receiving any kind of data in the receive FIFO, the application must set the Global OUT NAK bit by programming the following field:
   – SGONAK = 1 in OTG_FS_DCTL
2. Wait for the assertion of the GONAKEFF interrupt in OTG_FS_GINTSTS. When asserted, this interrupt indicates that the core has stopped receiving any type of data except SETUP packets.
3. The application can receive valid OUT packets after it has set SGONAK in OTG_FS_DCTL and before the core asserts the GONAKEFF interrupt (OTG_FS_GINTSTS).
4. The application can temporarily mask this interrupt by writing to the GINAKEFFM bit in the OTG_FS_GINTMSK register.
   – GINAKEFFM = 0 in the OTG_FS_GINTMSK register
5. Whenever the application is ready to exit the Global OUT NAK mode, it must clear the SGONAK bit in OTG_FS_DCTL. This also clears the GONAKEFF interrupt (OTG_FS_GINTSTS).
   – OTG_FS_DCTL = 1 in CGONAK
6. If the application has masked this interrupt earlier, it must be unmasked as follows:
   – GINAKEFFM = 1 in GINTMSK

- **Disabling an OUT endpoint**

The application must use this sequence to disable an OUT endpoint that it has enabled.

Application programming sequence

1. Before disabling any OUT endpoint, the application must enable Global OUT NAK mode in the core.
   – SGONAK = 1 in OTG_FS_DCTL
2. Wait for the GONAKEFF interrupt (OTG_FS_GINTSTS)
3. Disable the required OUT endpoint by programming the following fields:
   – EPDIS = 1 in OTG_FS_DOEPCTLx
   – SNAK = 1 in OTG_FS_DOEPCTLx
4. Wait for the EPDISD interrupt (OTG_FS_DOEPINTx), which indicates that the OUT endpoint is completely disabled. When the EPDISD interrupt is asserted, the core also clears the following bits:
   – EPDIS = 0 in OTG_FS_DOEPCTLx
   – EPENA = 0 in OTG_FS_DOEPCTLx
5. The application must clear the Global OUT NAK bit to start receiving data from other non-disabled OUT endpoints.
   – SGONAK = 0 in OTG_FS_DCTL

- **Transfer Stop Programming for OUT endpoints**

The application must use the following programing sequence to stop any transfers (because of an interrupt from the host, typically a reset).

Sequence of operations:

1. Enable all OUT endpoints by setting
   – EPENA = 1 in all OTG_FS_DOEPCTLx registers.
2. Flush the RxFIFO as follows
   – Poll OTG_FS_GRSTCTL.AHBIDL until it is 1. This indicates that AHB master is idle.
   – Perform read modify write operation on OTG_FS_GRSTCTL.RXFFLSH =1
   – Poll OTG_FS_GRSTCTL.RXFFLSH until it is 0, but also using a timeout of less than 10 milli-seconds (corresponds to minimum reset signaling duration). If 0 is seen before the timeout, then the RxFIFO flush is successful. If at the moment the timeout occurs, there is still a 1, (this may be due to a packet on EP0 coming from the host) then go back (once only) to the previous step ("Perform read modify write operation").
3. Before disabling any OUT endpoint, the application must enable Global OUT NAK mode in the core, according to the instructions in "**Setting the global OUT NAK** ***on page 1358***". This ensures that data in the RxFIFO is sent to the application successfully. Set SGONAK = 1 in OTG_FS_DCTL
4. Wait for the GONAKEFF interrupt (OTG_FS_GINTSTS)
5. Disable all active OUT endpoints by programming the following register bits:
   – EPDIS = 1 in registers OTG_FS_DOEPCTLx
   – SNAK = 1 in registers OTG_FS_DOEPCTLx
6. Wait for the EPDIS interrupt in OTG_FS_DOEPINTx for each OUT endpoint programmed in the previous step. The EPDIS interrupt in OTG_FS_DOEPINTx indicates that the corresponding OUT endpoint is completely disabled. When the EPDIS interrupt is asserted, the following bits are cleared:
   – EPENA = 0 in registers OTG_FS_DOEPCTLx
   – EPDIS = 0 in registers OTG_FS_DOEPCTLx
   – SNAK = 0 in registers OTG_FS_DOEPCTLx

- **Generic non-isochronous OUT data transfers**

This section describes a regular non-isochronous OUT data transfer (control, bulk, or interrupt).

Application requirements

1. Before setting up an OUT transfer, the application must allocate a buffer in the memory to accommodate all data to be received as part of the OUT transfer.
2. For OUT transfers, the transfer size field in the endpoint's transfer size register must be a multiple of the maximum packet size of the endpoint, adjusted to the word boundary.
   – transfer size[EPNUM] = n × (MPSIZ[EPNUM] + 4 – (MPSIZ[EPNUM] mod 4))
   – packet count[EPNUM] = n
   – $n > 0$
3. On any OUT endpoint interrupt, the application must read the endpoint's transfer size register to calculate the size of the payload in the memory. The received payload size can be less than the programmed transfer size.
   – Payload size in memory = application programmed initial transfer size – core updated final transfer size
   – Number of USB packets in which this payload was received = application programmed initial packet count – core updated final packet count

Internal data flow

1. The application must set the transfer size and packet count fields in the endpoint-specific registers, clear the NAK bit, and enable the endpoint to receive the data.
2. Once the NAK bit is cleared, the core starts receiving data and writes it to the receive FIFO, as long as there is space in the receive FIFO. For every data packet received on the USB, the data packet and its status are written to the receive FIFO. Every packet (maximum packet size or short packet) written to the receive FIFO decrements the packet count field for that endpoint by 1.
   - OUT data packets received with bad data CRC are flushed from the receive FIFO automatically.
   - After sending an ACK for the packet on the USB, the core discards non-isochronous OUT data packets that the host, which cannot detect the ACK, re-sends. The application does not detect multiple back-to-back data OUT packets on the same endpoint with the same data PID. In this case the packet count is not decremented.
   - If there is no space in the receive FIFO, isochronous or non-isochronous data packets are ignored and not written to the receive FIFO. Additionally, non-isochronous OUT tokens receive a NAK handshake reply.
   - In all the above three cases, the packet count is not decremented because no data are written to the receive FIFO.
3. When the packet count becomes 0 or when a short packet is received on the endpoint, the NAK bit for that endpoint is set. Once the NAK bit is set, the isochronous or non-isochronous data packets are ignored and not written to the receive FIFO, and non-isochronous OUT tokens receive a NAK handshake reply.
4. After the data are written to the receive FIFO, the application reads the data from the receive FIFO and writes it to external memory, one packet at a time per endpoint.
5. At the end of every packet write on the AHB to external memory, the transfer size for the endpoint is decremented by the size of the written packet.
6. The OUT data transfer completed pattern for an OUT endpoint is written to the receive FIFO on one of the following conditions:
   - The transfer size is 0 and the packet count is 0
   - The last OUT data packet written to the receive FIFO is a short packet ($0 \leq$ packet size $<$ maximum packet size)
7. When either the application pops this entry (OUT data transfer completed), a transfer completed interrupt is generated for the endpoint and the endpoint enable is cleared.

Application programming sequence

1. Program the OTG_FS_DOEPTSIZx register for the transfer size and the corresponding packet count.
2. Program the OTG_FS_DOEPCTLx register with the endpoint characteristics, and set the EPENA and CNAK bits.
   – EPENA = 1 in OTG_FS_DOEPCTLx
   – CNAK = 1 in OTG_FS_DOEPCTLx
3. Wait for the RXFLVL interrupt (in OTG_FS_GINTSTS) and empty the data packets from the receive FIFO.
   – This step can be repeated many times, depending on the transfer size.
4. Asserting the XFRC interrupt (OTG_FS_DOEPINTx) marks a successful completion of the non-isochronous OUT data transfer.
5. Read the OTG_FS_DOEPTSIZx register to determine the size of the received data payload.

- **Generic isochronous OUT data transfer**

This section describes a regular isochronous OUT data transfer.

Application requirements

1. All the application requirements for non-isochronous OUT data transfers also apply to isochronous OUT data transfers.
2. For isochronous OUT data transfers, the transfer size and packet count fields must always be set to the number of maximum-packet-size packets that can be received in a single frame and no more. Isochronous OUT data transfers cannot span more than 1 frame.
3. The application must read all isochronous OUT data packets from the receive FIFO (data and status) before the end of the periodic frame (EOPF interrupt in OTG_FS_GINTSTS).
4. To receive data in the following frame, an isochronous OUT endpoint must be enabled after the EOPF (OTG_FS_GINTSTS) and before the SOF (OTG_FS_GINTSTS).

Internal data flow

1. The internal data flow for isochronous OUT endpoints is the same as that for non-isochronous OUT endpoints, but for a few differences.
2. When an isochronous OUT endpoint is enabled by setting the Endpoint Enable and clearing the NAK bits, the Even/Odd frame bit must also be set appropriately. The core receives data on an isochronous OUT endpoint in a particular frame only if the following condition is met:
   – EONUM (in OTG_FS_DOEPCTLx) = SOFFN[0] (in OTG_FS_DSTS)
3. When the application completely reads an isochronous OUT data packet (data and status) from the receive FIFO, the core updates the RXDPID field in OTG_FS_DOEPTSIZx with the data PID of the last isochronous OUT data packet read from the receive FIFO.

Application programming sequence

1. Program the OTG_FS_DOEPTSIZx register for the transfer size and the corresponding packet count
2. Program the OTG_FS_DOEPCTLx register with the endpoint characteristics and set the Endpoint Enable, ClearNAK, and Even/Odd frame bits.
   - EPENA = 1
   - CNAK = 1
   - EONUM = (0: Even/1: Odd)
3. Wait for the RXFLVL interrupt (in OTG_FS_GINTSTS) and empty the data packets from the receive FIFO
   - This step can be repeated many times, depending on the transfer size.
4. The assertion of the XFRC interrupt (in OTG_FS_DOEPINTx) marks the completion of the isochronous OUT data transfer. This interrupt does not necessarily mean that the data in memory are good.
5. This interrupt cannot always be detected for isochronous OUT transfers. Instead, the application can detect the IISOOXFRM interrupt in OTG_FS_GINTSTS.
6. Read the OTG_FS_DOEPTSIZx register to determine the size of the received transfer and to determine the validity of the data received in the frame. The application must treat the data received in memory as valid only if one of the following conditions is met:
   - RXDPID = D0 (in OTG_FS_DOEPTSIZx) and the number of USB packets in which this payload was received = 1
   - RXDPID = D1 (in OTG_FS_DOEPTSIZx) and the number of USB packets in which this payload was received = 2
   - RXDPID = D2 (in OTG_FS_DOEPTSIZx) and the number of USB packets in which this payload was received = 3

     The number of USB packets in which this payload was received = Application programmed initial packet count – Core updated final packet count

   The application can discard invalid data packets.

- **Incomplete isochronous OUT data transfers**

This section describes the application programming sequence when isochronous OUT data packets are dropped inside the core.

Internal data flow

1. For isochronous OUT endpoints, the XFRC interrupt (in OTG_FS_DOEPINTx) may not always be asserted. If the core drops isochronous OUT data packets, the application could fail to detect the XFRC interrupt (OTG_FS_DOEPINTx) under the following circumstances:
   - When the receive FIFO cannot accommodate the complete ISO OUT data packet, the core drops the received ISO OUT data
   - When the isochronous OUT data packet is received with CRC errors
   - When the isochronous OUT token received by the core is corrupted
   - When the application is very slow in reading the data from the receive FIFO
2. When the core detects an end of periodic frame before transfer completion to all isochronous OUT endpoints, it asserts the incomplete Isochronous OUT data interrupt (IISOOXFRM in OTG_FS_GINTSTS), indicating that an XFRC interrupt (in OTG_FS_DOEPINTx) is not asserted on at least one of the isochronous OUT

endpoints. At this point, the endpoint with the incomplete transfer remains enabled, but no active transfers remain in progress on this endpoint on the USB.

Application programming sequence

1. Asserting the IISOOXFRM interrupt (OTG_FS_GINTSTS) indicates that in the current frame, at least one isochronous OUT endpoint has an incomplete transfer.
2. If this occurs because isochronous OUT data is not completely emptied from the endpoint, the application must ensure that the application empties all isochronous OUT data (data and status) from the receive FIFO before proceeding.
   – When all data are emptied from the receive FIFO, the application can detect the XFRC interrupt (OTG_FS_DOEPINTx). In this case, the application must re-enable the endpoint to receive isochronous OUT data in the next frame.
3. When it receives an IISOOXFRM interrupt (in OTG_FS_GINTSTS), the application must read the control registers of all isochronous OUT endpoints (OTG_FS_DOEPCTLx) to determine which endpoints had an incomplete transfer in the current microframe. An endpoint transfer is incomplete if both the following conditions are met:
   – EONUM bit (in OTG_FS_DOEPCTLx) = SOFFN[0] (in OTG_FS_DSTS)
   – EPENA = 1 (in OTG_FS_DOEPCTLx)
4. The previous step must be performed before the SOF interrupt (in OTG_FS_GINTSTS) is detected, to ensure that the current frame number is not changed.
5. For isochronous OUT endpoints with incomplete transfers, the application must discard the data in the memory and disable the endpoint by setting the EPDIS bit in OTG_FS_DOEPCTLx.
6. Wait for the EPDIS interrupt (in OTG_FS_DOEPINTx) and enable the endpoint to receive new data in the next frame.
   – Because the core can take some time to disable the endpoint, the application may not be able to receive the data in the next frame after receiving bad isochronous data.

- **Stalling a non-isochronous OUT endpoint**

This section describes how the application can stall a non-isochronous endpoint.

1. Put the core in the Global OUT NAK mode.
2. Disable the required endpoint
   – When disabling the endpoint, instead of setting the SNAK bit in OTG_FS_DOEPCTL, set STALL = 1 (in OTG_FS_DOEPCTL).

     The STALL bit always takes precedence over the NAK bit.
3. When the application is ready to end the STALL handshake for the endpoint, the STALL bit (in OTG_FS_DOEPCTLx) must be cleared.
4. If the application is setting or clearing a STALL for an endpoint due to a SetFeature.Endpoint Halt or ClearFeature.Endpoint Halt command, the STALL bit must be set or cleared before the application sets up the Status stage transfer on the control endpoint.

Examples

This section describes and depicts some fundamental transfer types and scenarios.

- Bulk OUT transaction

Figure 404 depicts the reception of a single Bulk OUT Data packet from the USB to the AHB and describes the events involved in the process.

Figure 404. Bulk OUT transaction

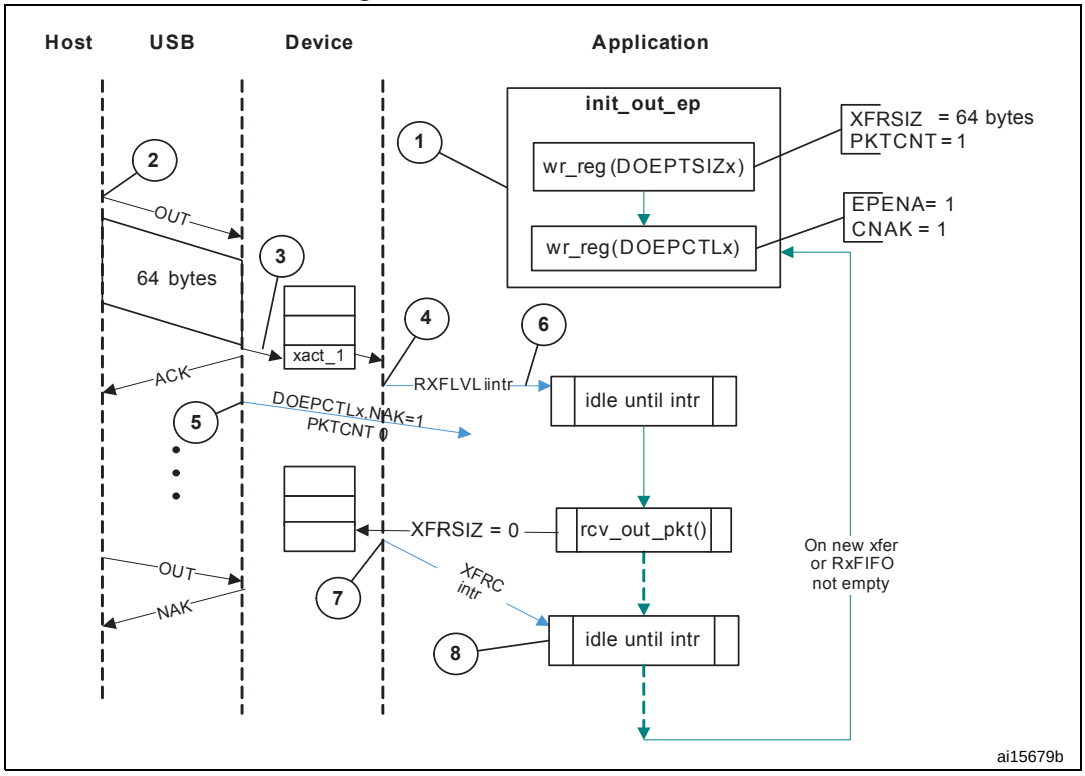

After a SetConfiguration/SetInterface command, the application initializes all OUT endpoints by setting CNAK = 1 and EPENA = 1 (in OTG_FS_DOEPCTLx), and setting a suitable XFRSIZ and PKTCNT in the OTG_FS_DOEPTSIZx register.

1. host attempts to send data (OUT token) to an endpoint.
2. When the core receives the OUT token on the USB, it stores the packet in the RxFIFO because space is available there.
3. After writing the complete packet in the RxFIFO, the core then asserts the RXFLVL interrupt (in OTG_FS_GINTSTS).
4. On receiving the PKTCNT number of USB packets, the core internally sets the NAK bit for this endpoint to prevent it from receiving any more packets.
5. The application processes the interrupt and reads the data from the RxFIFO.
6. When the application has read all the data (equivalent to XFRSIZ), the core generates an XFRC interrupt (in OTG_FS_DOEPINTx).
7. The application processes the interrupt and uses the setting of the XFRC interrupt bit (in OTG_FS_DOEPINTx) to determine that the intended transfer is complete.

IN data transfers

- **Packet write**

This section describes how the application writes data packets to the endpoint FIFO when dedicated transmit FIFOs are enabled.

1. The application can either choose the polling or the interrupt mode.

- In polling mode, the application monitors the status of the endpoint transmit data FIFO by reading the OTG_FS_DTXFSTSx register, to determine if there is enough space in the data FIFO.
- In interrupt mode, the application waits for the TXFE interrupt (in OTG_FS_DIEPINTx) and then reads the OTG_FS_DTXFSTSx register, to determine if there is enough space in the data FIFO.
- To write a single non-zero length data packet, there must be space to write the entire packet in the data FIFO.
- To write zero length packet, the application must not look at the FIFO space.

2. Using one of the above mentioned methods, when the application determines that there is enough space to write a transmit packet, the application must first write into the endpoint control register, before writing the data into the data FIFO. Typically, the application, must do a read modify write on the OTG_FS_DIEPCTLx register to avoid modifying the contents of the register, except for setting the Endpoint Enable bit.

The application can write multiple packets for the same endpoint into the transmit FIFO, if space is available. For periodic IN endpoints, the application must write packets only for one microframe. It can write packets for the next periodic transaction only after getting transfer complete for the previous transaction.

- **Setting IN endpoint NAK**

Internal data flow

1. When the application sets the IN NAK for a particular endpoint, the core stops transmitting data on the endpoint, irrespective of data availability in the endpoint's transmit FIFO.
2. Non-isochronous IN tokens receive a NAK handshake reply
   - Isochronous IN tokens receive a zero-data-length packet reply
3. The core asserts the INEPNE (IN endpoint NAK effective) interrupt in OTG_FS_DIEPINTx in response to the SNAK bit in OTG_FS_DIEPCTLx.
4. Once this interrupt is seen by the application, the application can assume that the endpoint is in IN NAK mode. This interrupt can be cleared by the application by setting the CNAK bit in OTG_FS_DIEPCTLx.

Application programming sequence

1. To stop transmitting any data on a particular IN endpoint, the application must set the IN NAK bit. To set this bit, the following field must be programmed.
   - SNAK = 1 in OTG_FS_DIEPCTLx
2. Wait for assertion of the INEPNE interrupt in OTG_FS_DIEPINTx. This interrupt indicates that the core has stopped transmitting data on the endpoint.
3. The core can transmit valid IN data on the endpoint after the application has set the NAK bit, but before the assertion of the NAK Effective interrupt.
4. The application can mask this interrupt temporarily by writing to the INEPNEM bit in DIEPMSK.
   - INEPNEM = 0 in DIEPMSK
5. To exit Endpoint NAK mode, the application must clear the NAK status bit (NAKSTS) in OTG_FS_DIEPCTLx. This also clears the INEPNE interrupt (in OTG_FS_DIEPINTx).
   - CNAK = 1 in OTG_FS_DIEPCTLx
6. If the application masked this interrupt earlier, it must be unmasked as follows:

– INEPNEM = 1 in DIEPMSK

- **IN endpoint disable**

Use the following sequence to disable a specific IN endpoint that has been previously enabled.

Application programming sequence

1. The application must stop writing data on the AHB for the IN endpoint to be disabled.
2. The application must set the endpoint in NAK mode.
   – SNAK = 1 in OTG_FS_DIEPCTLx
3. Wait for the INEPNE interrupt in OTG_FS_DIEPINTx.
4. Set the following bits in the OTG_FS_DIEPCTLx register for the endpoint that must be disabled.
   – EPDIS = 1 in OTG_FS_DIEPCTLx
   – SNAK = 1 in OTG_FS_DIEPCTLx
5. Assertion of the EPDISD interrupt in OTG_FS_DIEPINTx indicates that the core has completely disabled the specified endpoint. Along with the assertion of the interrupt, the core also clears the following bits:
   – EPENA = 0 in OTG_FS_DIEPCTLx
   – EPDIS = 0 in OTG_FS_DIEPCTLx
6. The application must read the OTG_FS_DIEPTSIZx register for the periodic IN EP, to calculate how much data on the endpoint were transmitted on the USB.
7. The application must flush the data in the Endpoint transmit FIFO, by setting the following fields in the OTG_FS_GRSTCTL register:
   – TXFNUM (in OTG_FS_GRSTCTL) = Endpoint transmit FIFO number
   – TXFFLSH in (OTG_FS_GRSTCTL) = 1

The application must poll the OTG_FS_GRSTCTL register, until the TXFFLSH bit is cleared by the core, which indicates the end of flush operation. To transmit new data on this endpoint, the application can re-enable the endpoint at a later point.

- **Transfer Stop Programming for IN endpoints**

The application must use the following programing sequence to stop any transfers (because of an interrupt from the host, typically a reset).

Sequence of operations:

1. Disable the IN endpoint by setting:
   – EPDIS = 1 in all OTG_FS_DIEPCTLx registers
2. Wait for the EPDIS interrupt in OTG_FS_DIEPINTx, which indicates that the IN endpoint is completely disabled. When the EPDIS interrupt is asserted the following bits are cleared:
   – EPDIS = 0 in OTG_FS_DIEPCTLx
   – EPENA = 0 in OTG_FS_DIEPCTLx
3. Flush the TxFIFO by programming the following bits:
   – TXFFLSH = 1 in OTG_FS_GRSTCTL
   – TXFNUM = “FIFO number specific to endpoint” in OTG_FS_GRSTCTL
4. The application can start polling till TXFFLSH in OTG_FS_GRSTCTL is cleared. When this bit is cleared, it ensures that there is no data left in the Tx FIFO.

- **Generic non-periodic IN data transfers**

Application requirements

1. Before setting up an IN transfer, the application must ensure that all data to be transmitted as part of the IN transfer are part of a single buffer.
2. For IN transfers, the Transfer Size field in the Endpoint Transfer Size register denotes a payload that constitutes multiple maximum-packet-size packets and a single short packet. This short packet is transmitted at the end of the transfer.
   – To transmit a few maximum-packet-size packets and a short packet at the end of the transfer:

     Transfer size[EPNUM] = x × MPSIZ[EPNUM] + sp

     If (sp > 0), then packet count[EPNUM] = x + 1.
     Otherwise, packet count[EPNUM] = x
   – To transmit a single zero-length data packet:

     Transfer size[EPNUM] = 0

     Packet count[EPNUM] = 1
   – To transmit a few maximum-packet-size packets and a zero-length data packet at the end of the transfer, the application must split the transfer into two parts. The first sends maximum-packet-size data packets and the second sends the zero-length data packet alone.

     First transfer: transfer size[EPNUM] = x × MPSIZ[epnum]; packet count = n;

     Second transfer: transfer size[EPNUM] = 0; packet count = 1;
3. Once an endpoint is enabled for data transfers, the core updates the Transfer size register. At the end of the IN transfer, the application must read the Transfer size register to determine how much data posted in the transmit FIFO have already been sent on the USB.
4. Data fetched into transmit FIFO = Application-programmed initial transfer size – core-updated final transfer size
   – Data transmitted on USB = (application-programmed initial packet count – Core updated final packet count) × MPSIZ[EPNUM]
   – Data yet to be transmitted on USB = (Application-programmed initial transfer size – data transmitted on USB)

Internal data flow

1. The application must set the transfer size and packet count fields in the endpoint-specific registers and enable the endpoint to transmit the data.
2. The application must also write the required data to the transmit FIFO for the endpoint.
3. Every time a packet is written into the transmit FIFO by the application, the transfer size for that endpoint is decremented by the packet size. The data is fetched from the memory by the application, until the transfer size for the endpoint becomes 0. After writing the data into the FIFO, the “number of packets in FIFO” count is incremented (this is a 3-bit count, internally maintained by the core for each IN endpoint transmit FIFO. The maximum number of packets maintained by the core at any time in an IN endpoint FIFO is eight). For zero-length packets, a separate flag is set for each FIFO, without any data in the FIFO.
4. Once the data are written to the transmit FIFO, the core reads them out upon receiving an IN token. For every non-isochronous IN data packet transmitted with an ACK handshake, the packet count for the endpoint is decremented by one, until the packet count is zero. The packet count is not decremented on a timeout.
5. For zero length packets (indicated by an internal zero length flag), the core sends out a zero-length packet for the IN token and decrements the packet count field.
6. If there are no data in the FIFO for a received IN token and the packet count field for that endpoint is zero, the core generates an “IN token received when TxFIFO is empty” (ITTXFE) Interrupt for the endpoint, provided that the endpoint NAK bit is not set. The core responds with a NAK handshake for non-isochronous endpoints on the USB.
7. The core internally rewinds the FIFO pointers and no timeout interrupt is generated.
8. When the transfer size is 0 and the packet count is 0, the transfer complete (XFRC) interrupt for the endpoint is generated and the endpoint enable is cleared.

Application programming sequence

1. Program the OTG_FS_DIEPTSIZx register with the transfer size and corresponding packet count.
2. Program the OTG_FS_DIEPCTLx register with the endpoint characteristics and set the CNAK and EPENA (Endpoint Enable) bits.
3. When transmitting non-zero length data packet, the application must poll the OTG_FS_DTXFSTSx register (where x is the FIFO number associated with that endpoint) to determine whether there is enough space in the data FIFO. The application can optionally use TXFE (in OTG_FS_DIEPINTx) before writing the data.

- **Generic periodic IN data transfers**

This section describes a typical periodic IN data transfer.

Application requirements

1. Application requirements 1, 2, 3, and 4 of *Generic non-periodic IN data transfers* also apply to periodic IN data transfers, except for a slight modification of requirement 2.
   – The application can only transmit multiples of maximum-packet-size data packets or multiples of maximum-packet-size packets, plus a short packet at the end. To transmit a few maximum-packet-size packets and a short packet at the end of the transfer, the following conditions must be met:

     transfer size[EPNUM] = x × MPSIZ[EPNUM] + sp
     (where *x* is an integer ≥ 0, and 0 ≤ sp < MPSIZ[EPNUM])

     If (sp > 0), packet count[EPNUM] = *x* + 1
     Otherwise, packet count[EPNUM] = *x*;

     MCNT[EPNUM] = packet count[EPNUM]

- The application cannot transmit a zero-length data packet at the end of a transfer. It can transmit a single zero-length data packet by itself. To transmit a single zero-length data packet:
- transfer size[EPNUM] = 0

  packet count[EPNUM] = 1

  MCNT[EPNUM] = packet count[EPNUM]

2. The application can only schedule data transfers one frame at a time.
   - (MCNT – 1) × MPSIZ ≤ XFERSIZ ≤ MCNT × MPSIZ
   - PKTCNT = MCNT (in OTG_FS_DIEPTSIZx)
   - If XFERSIZ < MCNT × MPSIZ, the last data packet of the transfer is a short packet.
   - Note that: MCNT is in OTG_FS_DIEPTSIZx, MPSIZ is in OTG_FS_DIEPCTLx, PKTCNT is in OTG_FS_DIEPTSIZx and XFERSIZ is in OTG_FS_DIEPTSIZx
3. The complete data to be transmitted in the frame must be written into the transmit FIFO by the application, before the IN token is received. Even when 1 word of the data to be transmitted per frame is missing in the transmit FIFO when the IN token is received, the core behaves as when the FIFO is empty. When the transmit FIFO is empty:
   - A zero data length packet would be transmitted on the USB for isochronous IN endpoints
   - A NAK handshake would be transmitted on the USB for interrupt IN endpoints

Internal data flow

1. The application must set the transfer size and packet count fields in the endpoint-specific registers and enable the endpoint to transmit the data.
2. The application must also write the required data to the associated transmit FIFO for the endpoint.
3. Every time the application writes a packet to the transmit FIFO, the transfer size for that endpoint is decremented by the packet size. The data are fetched from application memory until the transfer size for the endpoint becomes 0.
4. When an IN token is received for a periodic endpoint, the core transmits the data in the FIFO, if available. If the complete data payload (complete packet, in dedicated FIFO mode) for the frame is not present in the FIFO, then the core generates an IN token received when TxFIFO empty interrupt for the endpoint.
   - A zero-length data packet is transmitted on the USB for isochronous IN endpoints
   - A NAK handshake is transmitted on the USB for interrupt IN endpoints
5. The packet count for the endpoint is decremented by 1 under the following conditions:
   - For isochronous endpoints, when a zero- or non-zero-length data packet is transmitted
   - For interrupt endpoints, when an ACK handshake is transmitted
   - When the transfer size and packet count are both 0, the transfer completed interrupt for the endpoint is generated and the endpoint enable is cleared.
6. At the “Periodic frame Interval” (controlled by PFIVL in OTG_FS_DCFG), when the core finds non-empty any of the isochronous IN endpoint FIFOs scheduled for the current frame non-empty, the core generates an IISOIXFR interrupt in OTG_FS_GINTSTS.

Application programming sequence

1. Program the OTG_FS_DIEPCTLx register with the endpoint characteristics and set the CNAK and EPENA bits.
2. Write the data to be transmitted in the next frame to the transmit FIFO.
3. Asserting the ITTXFE interrupt (in OTG_FS_DIEPINTx) indicates that the application has not yet written all data to be transmitted to the transmit FIFO.
4. If the interrupt endpoint is already enabled when this interrupt is detected, ignore the interrupt. If it is not enabled, enable the endpoint so that the data can be transmitted on the next IN token attempt.
5. Asserting the XFRC interrupt (in OTG_FS_DIEPINTx) with no ITTXFE interrupt in OTG_FS_DIEPINTx indicates the successful completion of an isochronous IN transfer. A read to the OTG_FS_DIEPTSIZx register must give transfer size = 0 and packet count = 0, indicating all data were transmitted on the USB.
6. Asserting the XFRC interrupt (in OTG_FS_DIEPINTx), with or without the ITTXFE interrupt (in OTG_FS_DIEPINTx), indicates the successful completion of an interrupt IN transfer. A read to the OTG_FS_DIEPTSIZx register must give transfer size = 0 and packet count = 0, indicating all data were transmitted on the USB.
7. Asserting the incomplete isochronous IN transfer (IISOIXFR) interrupt in OTG_FS_GINTSTS with none of the aforementioned interrupts indicates the core did not receive at least 1 periodic IN token in the current frame.

- **Incomplete isochronous IN data transfers**

This section describes what the application must do on an incomplete isochronous IN data transfer.

Internal data flow

1. An isochronous IN transfer is treated as incomplete in one of the following conditions:
   a) The core receives a corrupted isochronous IN token on at least one isochronous IN endpoint. In this case, the application detects an incomplete isochronous IN transfer interrupt (IISOIXFR in OTG_FS_GINTSTS).
   b) The application is slow to write the complete data payload to the transmit FIFO and an IN token is received before the complete data payload is written to the FIFO. In this case, the application detects an IN token received when TxFIFO empty interrupt in OTG_FS_DIEPINTx. The application can ignore this interrupt, as it eventually results in an incomplete isochronous IN transfer interrupt (IISOIXFR in OTG_FS_GINTSTS) at the end of periodic frame.

      The core transmits a zero-length data packet on the USB in response to the received IN token.
2. The application must stop writing the data payload to the transmit FIFO as soon as possible.
3. The application must set the NAK bit and the disable bit for the endpoint.
4. The core disables the endpoint, clears the disable bit, and asserts the Endpoint Disable interrupt for the endpoint.

Application programming sequence

1. The application can ignore the IN token received when TxFIFO empty interrupt in OTG_FS_DIEPINTx on any isochronous IN endpoint, as it eventually results in an incomplete isochronous IN transfer interrupt (in OTG_FS_GINTSTS).
2. Assertion of the incomplete isochronous IN transfer interrupt (in OTG_FS_GINTSTS) indicates an incomplete isochronous IN transfer on at least one of the isochronous IN endpoints.

3. The application must read the Endpoint Control register for all isochronous IN endpoints to detect endpoints with incomplete IN data transfers.
4. The application must stop writing data to the Periodic Transmit FIFOs associated with these endpoints on the AHB.
5. Program the following fields in the OTG_FS_DIEPCTLx register to disable the endpoint:
   – SNAK = 1 in OTG_FS_DIEPCTLx
   – EPDIS = 1 in OTG_FS_DIEPCTLx
6. The assertion of the Endpoint Disabled interrupt in OTG_FS_DIEPINTx indicates that the core has disabled the endpoint.
   – At this point, the application must flush the data in the associated transmit FIFO or overwrite the existing data in the FIFO by enabling the endpoint for a new transfer in the next microframe. To flush the data, the application must use the OTG_FS_GRSTCTL register.

- **Stalling non-isochronous IN endpoints**

This section describes how the application can stall a non-isochronous endpoint.

Application programming sequence

1. Disable the IN endpoint to be stalled. Set the STALL bit as well.
2. EPDIS = 1 in OTG_FS_DIEPCTLx, when the endpoint is already enabled
   – STALL = 1 in OTG_FS_DIEPCTLx
   – The STALL bit always takes precedence over the NAK bit
3. Assertion of the Endpoint Disabled interrupt (in OTG_FS_DIEPINTx) indicates to the application that the core has disabled the specified endpoint.
4. The application must flush the non-periodic or periodic transmit FIFO, depending on the endpoint type. In case of a non-periodic endpoint, the application must re-enable the other non-periodic endpoints that do not need to be stalled, to transmit data.
5. Whenever the application is ready to end the STALL handshake for the endpoint, the STALL bit must be cleared in OTG_FS_DIEPCTLx.
6. If the application sets or clears a STALL bit for an endpoint due to a SetFeature.Endpoint Halt command or ClearFeature.Endpoint Halt command, the STALL bit must be set or cleared before the application sets up the Status stage transfer on the control endpoint.

Special case: stalling the control OUT endpoint

The core must stall IN/OUT tokens if, during the data stage of a control transfer, the host sends more IN/OUT tokens than are specified in the SETUP packet. In this case, the application must enable the ITTXFE interrupt in OTG_FS_DIEPINTx and the OTEPDIS interrupt in OTG_FS_DOEPINTx during the data stage of the control transfer, after the core has transferred the amount of data specified in the SETUP packet. Then, when the application receives this interrupt, it must set the STALL bit in the corresponding endpoint control register, and clear this interrupt.

34.17.7 Worst case response time

When the OTG_FS controller acts as a device, there is a worst case response time for any tokens that follow an isochronous OUT. This worst case response time depends on the AHB clock frequency.

The core registers are in the AHB domain, and the core does not accept another token before updating these register values. The worst case is for any token following an isochronous OUT, because for an isochronous transaction, there is no handshake and the next token could come sooner. This worst case value is 7 PHY clocks when the AHB clock is the same as the PHY clock. When the AHB clock is faster, this value is smaller.

If this worst case condition occurs, the core responds to bulk/interrupt tokens with a NAK and drops isochronous and SETUP tokens. The host interprets this as a timeout condition for SETUP and retries the SETUP packet. For isochronous transfers, the Incomplete isochronous IN transfer interrupt (IISOIXFR) and Incomplete isochronous OUT transfer interrupt (IISOOXFR) inform the application that isochronous IN/OUT packets were dropped.

Choosing the value of TRDT in OTG_FS_GUSBCFG

The value in TRDT (OTG_FS_GUSBCFG) is the time it takes for the MAC, in terms of PHY clocks after it has received an IN token, to get the FIFO status, and thus the first data from the PFC block. This time involves the synchronization delay between the PHY and AHB clocks. The worst case delay for this is when the AHB clock is the same as the PHY clock. In this case, the delay is 5 clocks.

Once the MAC receives an IN token, this information (token received) is synchronized to the AHB clock by the PFC (the PFC runs on the AHB clock). The PFC then reads the data from the SPRAM and writes them into the dual clock source buffer. The MAC then reads the data out of the source buffer (4 deep).

If the AHB is running at a higher frequency than the PHY, the application can use a smaller value for TRDT (in OTG_FS_GUSBCFG).

Figure 405 has the following signals:

- tkn_rcvd: Token received information from MAC to PFC
- dynced_tkn_rcvd: Doubled sync tkn_rcvd, from PCLK to HCLK domain
- spr_read: Read to SPRAM
- spr_addr: Address to SPRAM
- spr_rdata: Read data from SPRAM
- srcbuf_push: Push to the source buffer
- srcbuf_rdata: Read data from the source buffer. Data seen by MAC

Refer to *Table 203: TRDT values* for the values of TRDT versus AHB clock frequency.

Figure 405. TRDT max timing case

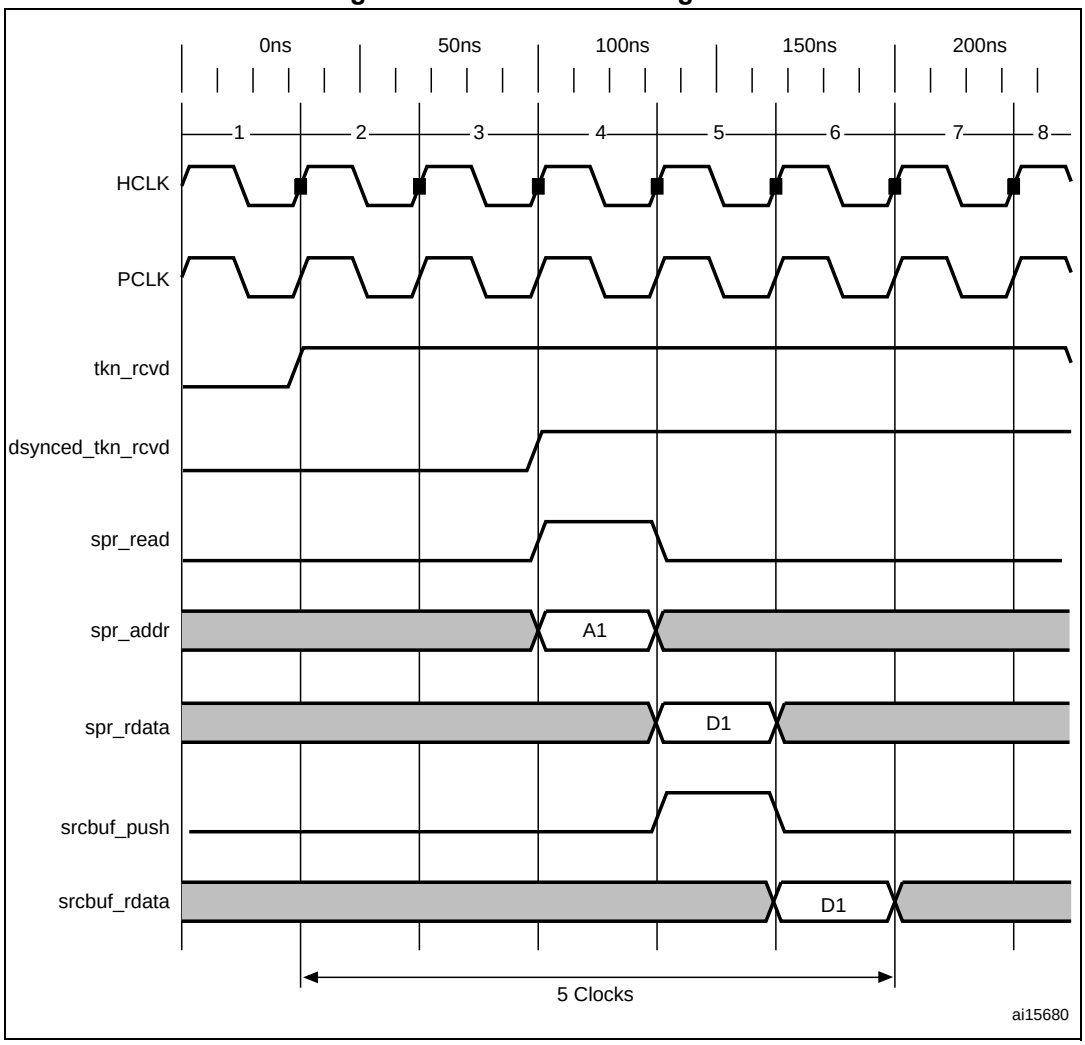

34.17.8 OTG programming model

The OTG_FS controller is an OTG device supporting HNP and SRP. When the core is connected to an “A” plug, it is referred to as an A-device. When the core is connected to a “B” plug it is referred to as a B-device. In host mode, the OTG_FS controller turns off V_{BUS} to conserve power. SRP is a method by which the B-device signals the A-device to turn on V_{BUS} power. A device must perform both data-line pulsing and V_{BUS} pulsing, but a host can detect either data-line pulsing or V_{BUS} pulsing for SRP. HNP is a method by which the B-device negotiates and switches to host role. In Negotiated mode after HNP, the B-device suspends the bus and reverts to the device role.

A-device session request protocol

The application must set the SRP-capable bit in the Core USB configuration register. This enables the OTG_FS controller to detect SRP as an A-device.

Figure 406. A-device SRP

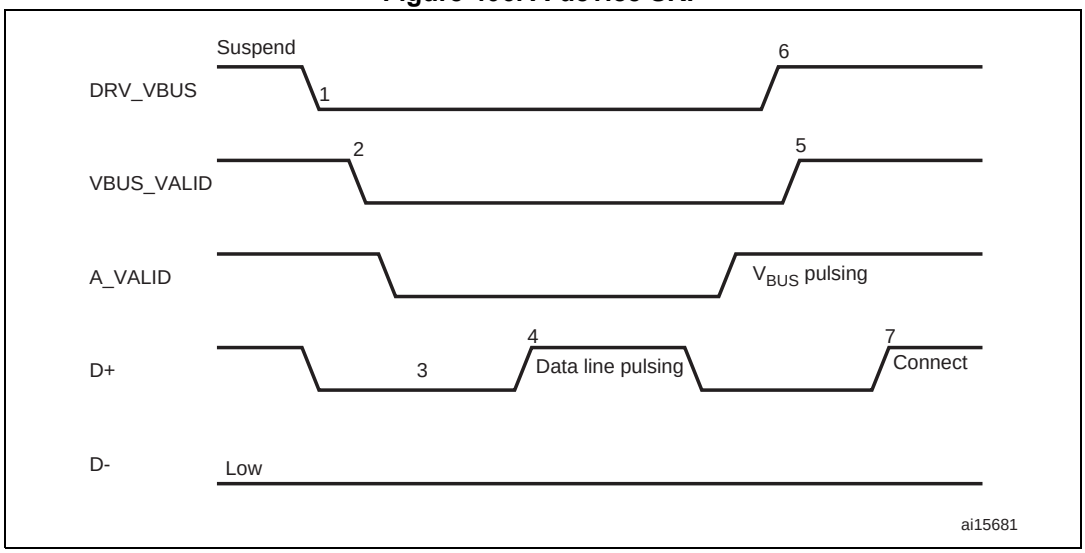

1. DRV_VBUS = V_{BUS} drive signal to the PHY
   VBUS_VALID = V_{BUS} valid signal from PHY
   A_VALID = A-peripheral V_{BUS} level signal to PHY
   D+ = Data plus line
   D- = Data minus line

1. To save power, the application suspends and turns off port power when the bus is idle by writing the port suspend and port power bits in the host port control and status register.
2. PHY indicates port power off by deasserting the VBUS_VALID signal.
3. The device must detect SE0 for at least 2 ms to start SRP when V_{BUS} power is off.
4. To initiate SRP, the device turns on its data line pull-up resistor for 5 to 10 ms. The OTG_FS controller detects data-line pulsing.
5. The device drives V_{BUS} above the A-device session valid (2.0 V minimum) for V_{BUS} pulsing.

   The OTG_FS controller interrupts the application on detecting SRP. The Session request detected bit is set in Global interrupt status register (SRQINT set in OTG_FS_GINTSTS).
6. The application must service the Session request detected interrupt and turn on the port power bit by writing the port power bit in the host port control and status register. The PHY indicates port power-on by asserting the VBUS_VALID signal.
7. When the USB is powered, the device connects, completing the SRP process.

B-device session request protocol

The application must set the SRP-capable bit in the Core USB configuration register. This enables the OTG_FS controller to initiate SRP as a B-device. SRP is a means by which the OTG_FS controller can request a new session from the host.

Figure 407. B-device SRP

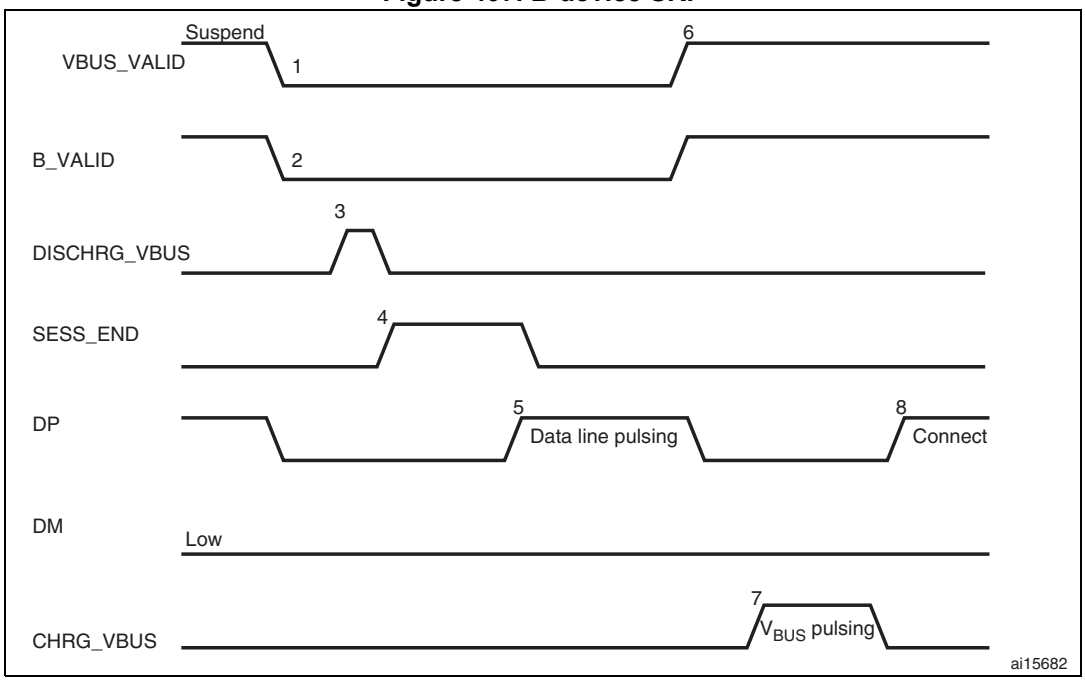

1. VBUS_VALID = V_{BUS} valid signal from PHY
   B_VALID = B-peripheral valid session to PHY
   DISCHRG_VBUS = discharge signal to PHY
   SESS_END = session end signal to PHY
   CHRG_VBUS = charge V_{BUS} signal to PHY
   DP = Data plus line
   DM = Data minus line

1. To save power, the host suspends and turns off port power when the bus is idle.

   The OTG_FS controller sets the early suspend bit in the Core interrupt register after 3 ms of bus idleness. Following this, the OTG_FS controller sets the USB suspend bit in the Core interrupt register.

   The OTG_FS controller informs the PHY to discharge V_{BUS}.
2. The PHY indicates the session's end to the device. This is the initial condition for SRP. The OTG_FS controller requires 2 ms of SE0 before initiating SRP.

   For a USB 1.1 full-speed serial transceiver, the application must wait until V_{BUS} discharges to 0.2 V after BSVLD (in OTG_FS_GOTGCTL) is deasserted. This discharge time can be obtained from the transceiver vendor and varies from one transceiver to another.
3. The USB OTG core informs the PHY to speed up V_{BUS} discharge.
4. The application initiates SRP by writing the session request bit in the OTG Control and status register. The OTG_FS controller perform data-line pulsing followed by V_{BUS} pulsing.
5. The host detects SRP from either the data-line or V_{BUS} pulsing, and turns on V_{BUS}. The PHY indicates V_{BUS} power-on to the device.

6. The OTG_FS controller performs V_{BUS} pulsing.

   The host starts a new session by turning on V_{BUS}, indicating SRP success. The OTG_FS controller interrupts the application by setting the session request success status change bit in the OTG interrupt status register. The application reads the session request success bit in the OTG control and status register.

7. When the USB is powered, the OTG_FS controller connects, completing the SRP process.

A-device host negotiation protocol

HNP switches the USB host role from the A-device to the B-device. The application must set the HNP-capable bit in the Core USB configuration register to enable the OTG_FS controller to perform HNP as an A-device.

Figure 408. A-device HNP

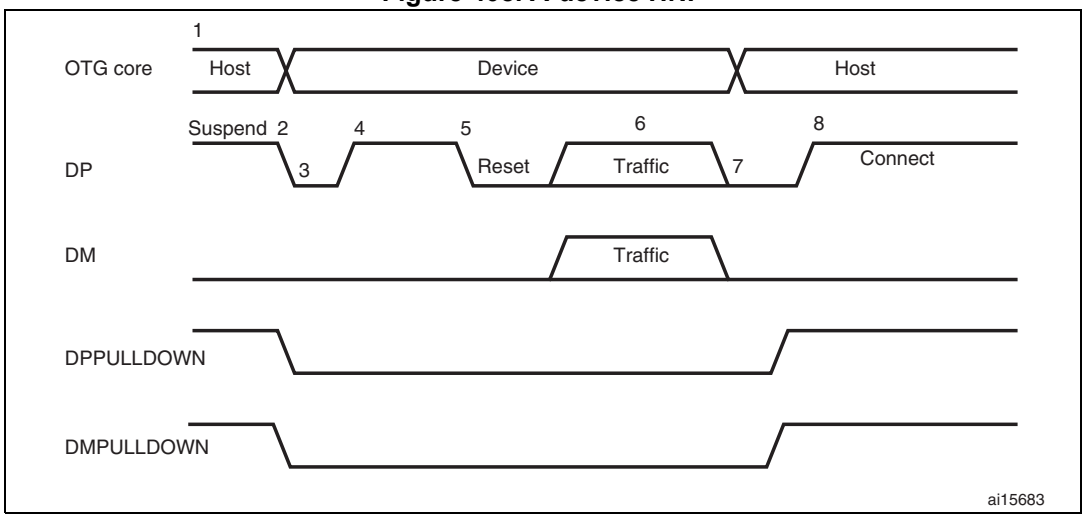

1. DPPULLDOWN = signal from core to PHY to enable/disable the pull-down on the DP line inside the PHY. DMPULLDOWN = signal from core to PHY to enable/disable the pull-down on the DM line inside the PHY.

1. The OTG_FS controller sends the B-device a SetFeature b_hnp_enable descriptor to enable HNP support. The B-device's ACK response indicates that the B-device supports HNP. The application must set host Set HNP Enable bit in the OTG Control

and status register to indicate to the OTG_FS controller that the B-device supports HNP.

2. When it has finished using the bus, the application suspends by writing the Port suspend bit in the host port control and status register.
3. When the B-device observes a USB suspend, it disconnects, indicating the initial condition for HNP. The B-device initiates HNP only when it must switch to the host role; otherwise, the bus continues to be suspended.

   The OTG_FS controller sets the host negotiation detected interrupt in the OTG interrupt status register, indicating the start of HNP.

   The OTG_FS controller deasserts the DM pull down and DM pull down in the PHY to indicate a device role. The PHY enables the OTG_FS_DP pull-up resistor to indicate a connect for B-device.

   The application must read the current mode bit in the OTG Control and status register to determine device mode operation.
4. The B-device detects the connection, issues a USB reset, and enumerates the OTG_FS controller for data traffic.
5. The B-device continues the host role, initiating traffic, and suspends the bus when done.

   The OTG_FS controller sets the early suspend bit in the Core interrupt register after 3 ms of bus idleness. Following this, the OTG_FS controller sets the USB Suspend bit in the Core interrupt register.
6. In Negotiated mode, the OTG_FS controller detects the suspend, disconnects, and switches back to the host role. The OTG_FS controller asserts the DM pull down and DM pull down in the PHY to indicate its assumption of the host role.
7. The OTG_FS controller sets the Connector ID status change interrupt in the OTG Interrupt Status register. The application must read the connector ID status in the OTG Control and Status register to determine the OTG_FS controller operation as an A-device. This indicates the completion of HNP to the application. The application must read the Current mode bit in the OTG control and status register to determine host mode operation.
8. The B-device connects, completing the HNP process.

B-device host negotiation protocol

HNP switches the USB host role from B-device to A-device. The application must set the HNP-capable bit in the Core USB configuration register to enable the OTG_FS controller to perform HNP as a B-device.

Figure 409. B-device HNP

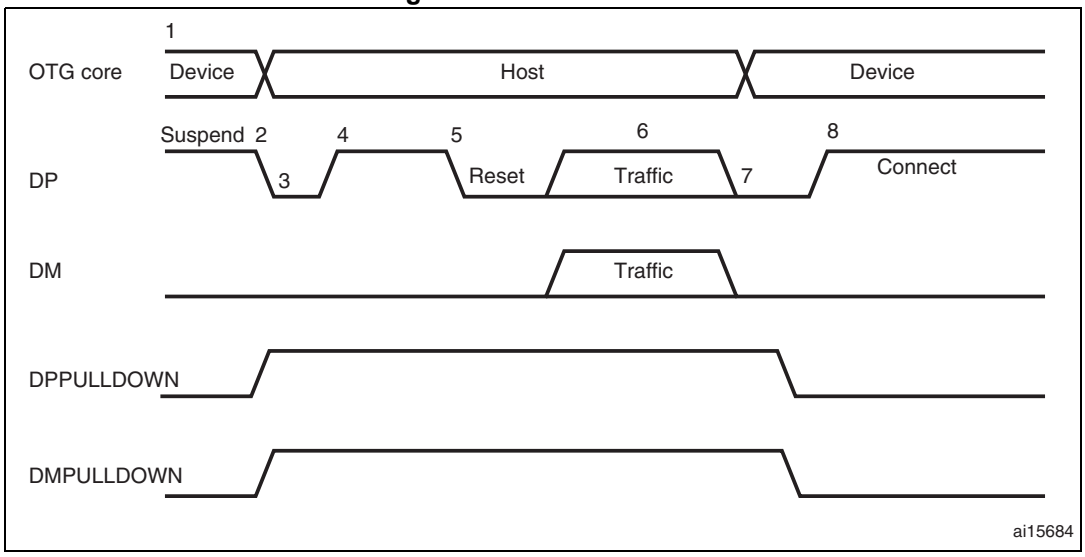

1. DPPULLDOWN = signal from core to PHY to enable/disable the pull-down on the DP line inside the PHY. DMPULLDOWN = signal from core to PHY to enable/disable the pull-down on the DM line inside the PHY.

1. The A-device sends the SetFeature b_hnp_enable descriptor to enable HNP support. The OTG_FS controller's ACK response indicates that it supports HNP. The application must set the device HNP enable bit in the OTG Control and status register to indicate HNP support.

   The application sets the HNP request bit in the OTG Control and status register to indicate to the OTG_FS controller to initiate HNP.

2. When it has finished using the bus, the A-device suspends by writing the Port suspend bit in the host port control and status register.

   The OTG_FS controller sets the Early suspend bit in the Core interrupt register after 3 ms of bus idleness. Following this, the OTG_FS controller sets the USB suspend bit in the Core interrupt register.

   The OTG_FS controller disconnects and the A-device detects SE0 on the bus, indicating HNP. The OTG_FS controller asserts the DP pull down and DM pull down in the PHY to indicate its assumption of the host role.

   The A-device responds by activating its OTG_FS_DP pull-up resistor within 3 ms of detecting SE0. The OTG_FS controller detects this as a connect.

   The OTG_FS controller sets the host negotiation success status change interrupt in the OTG Interrupt status register, indicating the HNP status. The application must read the host negotiation success bit in the OTG Control and status register to determine host negotiation success. The application must read the current Mode bit in the Core interrupt register (OTG_FS_GINTSTS) to determine host mode operation.

3. The application sets the reset bit (PRST in OTG_FS_HPRT) and the OTG_FS controller issues a USB reset and enumerates the A-device for data traffic.

4. The OTG_FS controller continues the host role of initiating traffic, and when done, suspends the bus by writing the Port suspend bit in the host port control and status register.
5. In Negotiated mode, when the A-device detects a suspend, it disconnects and switches back to the host role. The OTG_FS controller deasserts the DP pull down and DM pull down in the PHY to indicate the assumption of the device role.
6. The application must read the current mode bit in the Core interrupt (OTG_FS_GINTSTS) register to determine the host mode operation.
7. The OTG_FS controller connects, completing the HNP process.

35 USB on-the-go high-speed (OTG_HS)

This section applies to the whole STM32F4xx family, unless otherwise specified.

35.1 OTG_HS introduction

Portions Copyright (c) 2004, 2005 Synopsys, Inc. All rights reserved. Used with permission.

This section presents the architecture and the programming model of the OTG_HS controller.

The following acronyms are used throughout the section:

FS	full-speed
HS	High-speed
LS	Low-speed
USB	Universal serial bus
OTG	On-the-go
PHY	Physical layer
MAC	Media access controller
PFC	Packet FIFO controller
UTMI	USB Transceiver Macrocell Interface
ULPI	UTMI+ Low Pin Interface

References are made to the following documents:

- USB On-The-Go Supplement, Revision 1.3
- Universal Serial Bus Revision 2.0 Specification

The OTG_HS is a dual-role device (DRD) controller that supports both peripheral and host functions and is fully compliant with the *On-The-Go Supplement to the USB 2.0 Specification*. It can also be configured as a host-only or peripheral-only controller, fully compliant with the *USB 2.0 Specification.* In host mode, the OTG_HS supports high-speed (HS, 480 Mbits/s), full-speed (FS, 12 Mbits/s) and low-speed (LS, 1.5 Mbits/s) transfers whereas in peripheral mode, it only supports high-speed (HS, 480Mbits/s) and full-speed (FS, 12 Mbits/s) transfers. The OTG_HS supports both HNP and SRP. The only external device required is a charge pump for VBUS in OTG mode.

35.2 OTG_HS main features

The main features can be divided into three categories: general, host-mode and peripheral-mode features.

35.2.1 General features

The OTG_HS interface main features are the following:

- It is USB-IF certified in compliance with the Universal Serial Bus Revision 2.0 Specification
- It supports 3 PHY interfaces
  - An on-chip full-speed PHY
  - An ULPI interface for external high-speed PHY.
- It supports the host negotiation protocol (HNP) and the session request protocol (SRP)
- It allows the host to turn V_{BUS} off to save power in OTG applications, with no need for external components
- It allows to monitor V_{BUS} levels using internal comparators
- It supports dynamic host-peripheral role switching
- It is software-configurable to operate as:
  - An SRP-capable USB HS/FS peripheral (B-device)
  - An SRP-capable USB HS/FS/low-speed host (A-device)
  - An USB OTG FS dual-role device
- It supports HS/FS SOFs as well as low-speed (LS) keep-alive tokens with:
  - SOF pulse PAD output capability
  - SOF pulse internal connection to timer 2 (TIM2)
  - Configurable framing period
  - Configurable end-of-frame interrupt
- It embeds an internal DMA with shareholding support and software selectable AHB burst type in DMA mode
- It has power saving features such as system clock stop during USB suspend, switching off of the digital core internal clock domains, PHY and DFIFO power management
- It features a dedicated 4-Kbyte data RAM with advanced FIFO management:
  - The memory partition can be configured into different FIFOs to allow flexible and efficient use of RAM
  - Each FIFO can contain multiple packets
  - Memory allocation is performed dynamically
  - The FIFO size can be configured to values that are not powers of 2 to allow the use of contiguous memory locations
- It ensures a maximum USB bandwidth of up to one frame without application intervention

35.2.2 Host-mode features

The OTG_HS interface features in host mode are the following:

- It requires an external charge pump to generate V_{BUS}
- It has up to 12 host channels (pipes), each channel being dynamically reconfigurable to support any kind of USB transfer
- It features a built-in hardware scheduler holding:
  - Up to 8 interrupt plus isochronous transfer requests in the periodic hardware queue
  - Up to 8 control plus bulk transfer requests in the nonperiodic hardware queue
- It manages a shared RX FIFO, a periodic TX FIFO, and a nonperiodic TX FIFO for efficient usage of the USB data RAM
- It features dynamic trimming capability of SOF framing period in host mode.

35.2.3 Peripheral-mode features

The OTG_HS interface main features in peripheral mode are the following:

- It has 1 bidirectional control endpoint 0
- It has 5 IN endpoints (EP) configurable to support bulk, interrupt or isochronous transfers
- It has 5 OUT endpoints configurable to support bulk, interrupt or isochronous transfers
- It manages a shared Rx FIFO and a Tx-OUT FIFO for efficient usage of the USB data RAM
- It manages up to 6 dedicated Tx-IN FIFOs (one for each IN-configured EP) to reduce the application load
- It features soft disconnect capability

35.3 OTG_HS functional description

Figure 410 shows the OTG_HS interface block diagram.

Figure 410. USB OTG interface block diagram

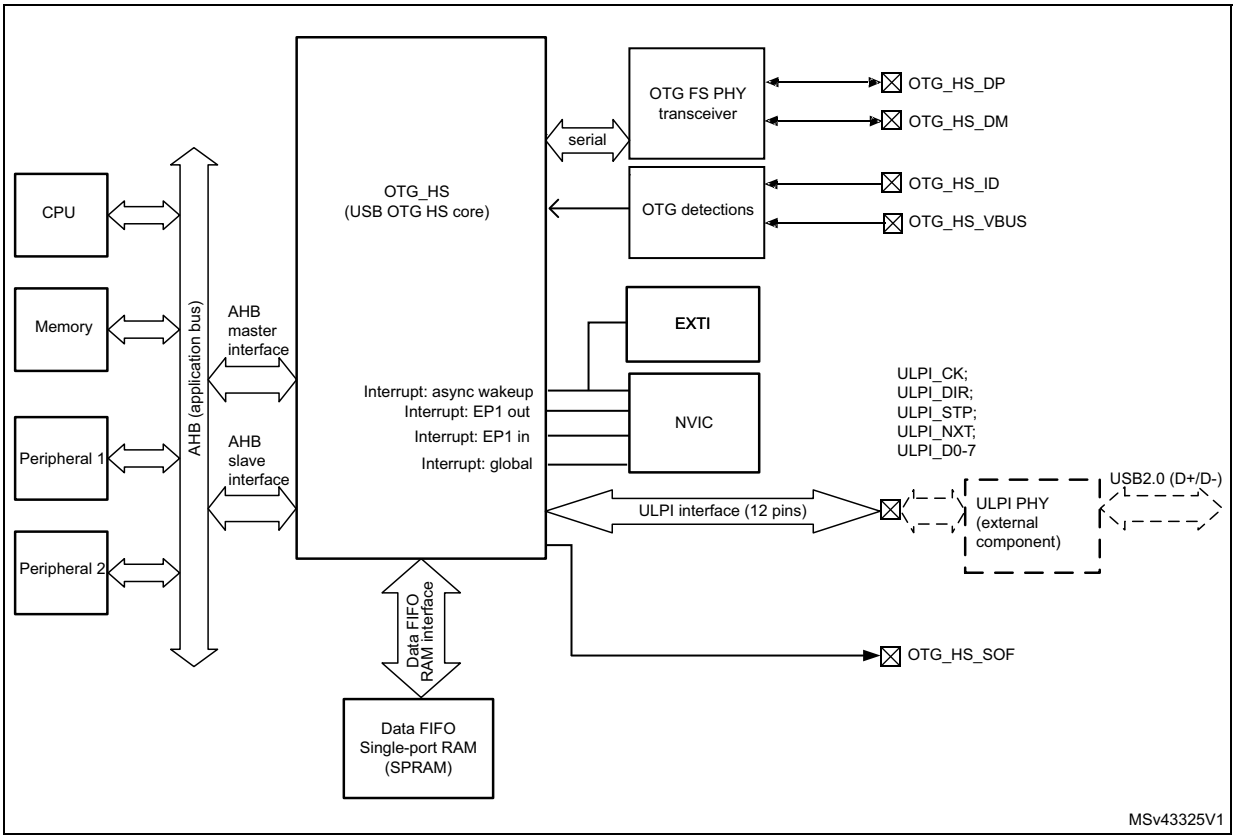

1. The USB DMA cannot directly address the internal Flash memory.

35.3.1 OTG pins

Table 206. OTG_HS input/output pins

Signal name	Signal type	Description
OTG_HS_DP	Digital input/output	USB OTG D+ line
OTG_HS_DM	Digital input/output	USB OTG D- line
OTG_HS_ID	Digital input	USB OTG ID
OTG_HS_VBUS	Analog input	USB OTG VBUS
OTG_HS_SOF	Digital output	USB OTG Start Of Frame (visibility)
OTG_HS_ULPI_CK	Digital input	USB OTG ULPI clock
OTG_HS_ULPI_DIR	Digital input	USB OTG ULPI data bus direction control
OTG_HS_ULPI_STP	Digital output	USB OTG ULPI data stream stop
OTG_HS_ULPI_NXT	Digital input	USB OTG ULPI next data stream request
OTG_HS_ULPI_D[0..7]	Digital input/output	USB OTG ULPI 8-bit bi-directional data bus

35.3.2 High-speed OTG PHY

The USB OTG HS core embeds an ULPI interface to connect an external HS phy.

35.3.3 Embedded Full-speed OTG PHY

The full-speed OTG PHY includes the following components:

- FS/LS transceiver module used by both host and Device. It directly drives transmission and reception on the single-ended USB lines.
- Integrated ID pull-up resistor used to sample the ID line for A/B Device identification.
- DP/DM integrated pull-up and pull-down resistors controlled by the OTG_HS core depending on the current role of the device. As a peripheral, it enables the DP pull-up resistor to signal full-speed peripheral connections as soon as V_{BUS} is sensed to be at a valid level (B-session valid). In host mode, pull-down resistors are enabled on both DP/DM. Pull-up and pull-down resistors are dynamically switched when the peripheral role is changed via the host negotiation protocol (HNP).
- Pull-up/pull-down resistor ECN circuit

  The DP pull-up consists of 2 resistors controlled separately from the OTG_HS as per the resistor Engineering Change Notice applied to USB Rev2.0. The dynamic trimming of the DP pull-up strength allows to achieve a better noise rejection and Tx/Rx signal quality.
- V_{BUS} sensing comparators with hysteresis used to detect VBUS_VALID, A-B Session Valid and session-end voltage thresholds. They are used to drive the session request protocol (SRP), detect valid startup and end-of-session conditions, and constantly monitor the V_{BUS} supply during USB operations.
- V_{BUS} pulsing method circuit used to charge/discharge V_{BUS} through resistors during the SRP (weak drive).

Caution: To guarantee a correct operation for the USB OTG HS peripheral, the AHB frequency should be higher than 30 MHz.

35.4 OTG dual-role device

35.4.1 ID line detection

The host or peripheral (the default) role depends on the level of the ID input line. It is determined when the USB cable is plugged in and depends on which side of the USB cable is connected to the micro-AB receptacle:

- If the B-side of the USB cable is connected with a floating ID wire, the integrated pull-up resistor detects a high ID level and the default peripheral role is confirmed. In this configuration the OTG_HS conforms to the FSM standard described in section 6.8.2. On-The-Go B-device of the USB On-The-Go Supplement, Revision 1.3.
- If the A-side of the USB cable is connected with a grounded ID, the OTG_HS issues an ID line status change interrupt (CIDSCHG bit in the OTG_HS_GINTSTS register) for host software initialization, and automatically switches to host role. In this configuration the OTG_HS conforms to the FSM standard described by section 6.8.1: On-The-Go A-Device of the USB On-The-Go Supplement, Revision 1.3.

35.4.2 HNP dual role device

The HNP capable bit in the Global USB configuration register (HNPCAP bit in the OTG_HS_ GUSBCFG register) configures the OTG_HS core to dynamically change from A-host to A-device role and vice-versa, or from B-device to B-host role and vice-versa, according to the host negotiation protocol (HNP). The current device status is defined by the

combination of the Connector ID Status bit in the Global OTG control and status register (CIDSTS bit in OTG_HS_GOTGCTL) and the current mode of operation bit in the global interrupt and status register (CMOD bit in OTG_HS_GINTSTS).

The HNP programming model is described in detail in *Section 35.13: OTG_HS programming model*.

35.4.3 SRP dual-role device

The SRP capable bit in the global USB configuration register (SRPCAP bit in OTG_HS_GUSBCFG) configures the OTG_HS core to switch V_{BUS} off for the A-device in order to save power. The A-device is always in charge of driving V_{BUS} regardless of the OTG_HS role (host or peripheral). The SRP A/B-device program model is described in detail in *Section 35.13: OTG_HS programming model*.

35.5 USB functional description in peripheral mode

The OTG_HS operates as an USB peripheral in the following circumstances:

- OTG B-device

  OTG B-device default state if the B-side of USB cable is plugged in
- OTG A-device

  OTG A-device state after the HNP switches the OTG_HS to peripheral role
- B-Device

  If the ID line is present, functional and connected to the B-side of the USB cable, and the HNP-capable bit in the Global USB Configuration register (HNPCAP bit in OTG_HS_GUSBCFG) is cleared (see On-The-Go specification Revision 1.3 section 6.8.3).
- Peripheral only (see *Figure 388: USB peripheral-only connection*)

  The force peripheral mode bit in the Global USB configuration register (FDMOD in OTG_HS_GUSBCFG) is set to 1, forcing the OTG_HS core to operate in USB peripheral-only mode (see On-The-Go specification Revision 1.3 section 6.8.3). In this case, the ID line is ignored even if it is available on the USB connector.

Note: To build a bus-powered device architecture in the B-Device or peripheral-only configuration, an external regulator must be added to generate the V_{DD} supply voltage from V_{BUS}.

35.5.1 SRP-capable peripheral

The SRP capable bit in the Global USB configuration register (SRPCAP bit in OTG_HS_GUSBCFG) configures the OTG_HS to support the session request protocol (SRP). As a result, it allows the remote A-device to save power by switching V_{BUS} off when the USB session is suspended.

The SRP peripheral mode program model is described in detail in *Section : B-device session request protocol*.

35.5.2 Peripheral states

Powered state

The V_{BUS} input detects the B-session valid voltage used to put the USB peripheral in the Powered state (see USB2.0 specification section 9.1). The OTG_HS then automatically connects the DP pull-up resistor to signal full-speed device connection to the host, and generates the session request interrupt (SRQINT bit in OTG_HS_GINTSTS) to notify the Powered state. The V_{BUS} input also ensures that valid V_{BUS} levels are supplied by the host during USB operations. If V_{BUS} drops below the B-session valid voltage (for example because power disturbances occurred or the host port has been switched off), the OTG_HS automatically disconnects and the session end detected (SEDET bit in OTG_HS_GOTGINT) interrupt is generated to notify that the OTG_HS has exited the Powered state.

In Powered state, the OTG_HS expects a reset from the host. No other USB operations are possible. When a reset is received, the reset detected interrupt (USBRST in OTG_HS_GINTSTS) is generated. When the reset is complete, the enumeration done interrupt (ENUMDNE bit in OTG_HS_GINTSTS) is generated and the OTG_HS enters the Default state.

Soft disconnect

The Powered state can be exited by software by using the soft disconnect feature. The DP pull-up resistor is removed by setting the Soft disconnect bit in the device control register (SDIS bit in OTG_HS_DCTL), thus generating a device disconnect detection interrupt on the host side even though the USB cable was not really unplugged from the host port.

Default state

In Default state the OTG_HS expects to receive a SET_ADDRESS command from the host. No other USB operations are possible. When a valid SET_ADDRESS command is decoded on the USB, the application writes the corresponding number into the device address field in the device configuration register (DAD bit in OTG_HS_DCFG). The OTG_HS then enters the address state and is ready to answer host transactions at the configured USB address.

Suspended state

The OTG_HS peripheral constantly monitors the USB activity. When the USB remains idle for 3 ms, the early suspend interrupt (ESUSP bit in OTG_HS_GINTSTS) is issued. It is confirmed 3 ms later, if appropriate, by generating a suspend interrupt (USBSUSP bit in OTG_HS_GINTSTS). The device suspend bit is then automatically set in the device status register (SUSPSTS bit in OTG_HS_DSTS) and the OTG_HS enters the Suspended state.

The device can also exit from the Suspended state by itself. In this case the application sets the remote wakeup signaling bit in the device control register (RWUSIG bit in OTG_HS_DCTL) and clears it after 1 to 15 ms.

When a resume signaling is detected from the host, the resume interrupt (WKUPINT bit in OTG_HS_GINTSTS) is generated and the device suspend bit is automatically cleared.

35.5.3 Peripheral endpoints

The OTG_HS core instantiates the following USB endpoints:

- Control endpoint 0

  This endpoint is bidirectional and handles control messages only.

  It has a separate set of registers to handle IN and OUT transactions, as well as dedicated control (OTG_HS_DIEPCTL0/OTG_HS_DOEPCTL0), transfer configuration (OTG_HS_DIEPTSIZ0/OTG_HS_DIEPTSIZ0), and status-interrupt (OTG_HS_DIEPINTx/)OTG_HS_DOEPINT0) registers. The bits available inside the control and transfer size registers slightly differ from other endpoints.
- 5 IN endpoints
  - They can be configured to support the isochronous, bulk or interrupt transfer type.
  - They feature dedicated control (OTG_HS_DIEPCTLx), transfer configuration (OTG_HS_DIEPTSIZx), and status-interrupt (OTG_HS_DIEPINTx) registers.
  - The Device IN endpoints common interrupt mask register (OTG_HS_DIEPMSK) allows to enable/disable a single endpoint interrupt source on all of the IN endpoints (EP0 included).
  - They support incomplete isochronous IN transfer interrupt (IISOIXFR bit in OTG_HS_GINTSTS). This interrupt is asserted when there is at least one isochronous IN endpoint for which the transfer is not completed in the current frame. This interrupt is asserted along with the end of periodic frame interrupt (OTG_HS_GINTSTS/EOPF).
- 5 OUT endpoints
  - They can be configured to support the isochronous, bulk or interrupt transfer type.
  - They feature dedicated control (OTG_HS_DOEPCTLx), transfer configuration (OTG_HS_DOEPTSIZx) and status-interrupt (OTG_HS_DOEPINTx) registers.
  - The Device Out endpoints common interrupt mask register (OTG_HS_DOEPMSK) allows to enable/disable a single endpoint interrupt source on all OUT endpoints (EP0 included).
  - They support incomplete isochronous OUT transfer interrupt (INCOMPISOOUT bit in OTG_HS_GINTSTS). This interrupt is asserted when there is at least one isochronous OUT endpoint on which the transfer is not completed in the current frame. This interrupt is asserted along with the end of periodic frame interrupt (OTG_HS_GINTSTS/EOPF).

Endpoint controls

The following endpoint controls are available through the device endpoint-x IN/OUT control register (DIEPCTLx/DOEPCTLx):

- Endpoint enable/disable
- Endpoint activation in current configuration
- Program the USB transfer type (isochronous, bulk, interrupt)
- Program the supported packet size
- Program the Tx-FIFO number associated with the IN endpoint
- Program the expected or transmitted data0/data1 PID (bulk/interrupt only)
- Program the even/odd frame during which the transaction is received or transmitted (isochronous only)
- Optionally program the NAK bit to always send a negative acknowledge to the host regardless of the FIFO status
- Optionally program the STALL bit to always stall host tokens to that endpoint
- Optionally program the Snoop mode for OUT endpoint where the received data CRC is not checked

Endpoint transfer

The device endpoint-x transfer size registers (DIEPTSIZx/DOEPTSIZx) allow the application to program the transfer size parameters and read the transfer status.

The programming operation must be performed before setting the endpoint enable bit in the endpoint control register.

Once the endpoint is enabled, these fields are read-only as the OTG FS core updates them with the current transfer status.

The following transfer parameters can be programmed:

- Transfer size in bytes
- Number of packets constituting the overall transfer size.

Endpoint status/interrupt

The device endpoint-x interrupt registers (DIEPINTx/DOPEPINTx) indicate the status of an endpoint with respect to USB- and AHB-related events. The application must read these registers when the OUT endpoint interrupt bit or the IN endpoint interrupt bit in the core interrupt register (OEPINT bit in OTG_HS_GINTSTS or IEPINT bit in OTG_HS_GINTSTS, respectively) is set. Before the application can read these registers, it must first read the device all endpoints interrupt register (OTG_HS_DAINT) to get the exact endpoint number for the device endpoint-x interrupt register. The application must clear the appropriate bit in this register to clear the corresponding bits in the DAINT and GINTSTS registers.

The peripheral core provides the following status checks and interrupt generation:

- Transfer completed interrupt, indicating that data transfer has completed on both the application (AHB) and USB sides
- Setup stage done (control-out only)
- Associated transmit FIFO is half or completely empty (in endpoints)
- NAK acknowledge transmitted to the host (isochronous-in only)
- IN token received when Tx-FIFO was empty (bulk-in/interrupt-in only)
- OUT token received when endpoint was not yet enabled
- Babble error condition detected
- Endpoint disable by application is effective
- Endpoint NAK by application is effective (isochronous-in only)
- More than 3 back-to-back setup packets received (control-out only)
- Timeout condition detected (control-in only)
- Isochronous out packet dropped without generating an interrupt

35.6 USB functional description on host mode

This section gives the functional description of the OTG_HS in the USB host mode. The OTG_HS works as a USB host in the following circumstances:

- OTG A-host

  OTG A-device default state when the A-side of the USB cable is plugged in
- OTG B-host

  OTG B-device after HNP switching to the host role
- A-device

  If the ID line is present, functional and connected to the A-side of the USB cable, and the HNP-capable bit is cleared in the Global USB Configuration register (HNPCAP bit in OTG_HS_GUSBCFG). Integrated pull-down resistors are automatically set on the DP/DM lines.
- Host only (*Figure 389: USB host-only connection*).

  The force host mode bit in the global USB configuration register (FHMOD bit in OTG_HS_GUSBCFG) forces the OTG_HS core to operate in USB host-only mode. In this case, the ID line is ignored even if it is available on the USB connector. Integrated pull-down resistors are automatically set on the OTG_HS_FS_DP/OTG_HS_FS_DM lines.

Note: On-chip 5 V V_{BUS} generation is not supported. As a result, a charge pump or a basic power switch (if a 5 V supply is available on the application board) must be added externally to drive the 5 V V_{BUS} line. The external charge pump can be driven by any GPIO output. This is required for the OTG A-host, A-device and host-only configurations.

The V_{BUS} input ensures that valid V_{BUS} levels are supplied by the charge pump during USB operations while the charge pump overcurrent output can be input to any GPIO pin configured to generate port interrupts. The overcurrent ISR must promptly disable the V_{BUS} generation.

Figure 411. USB host-only connection

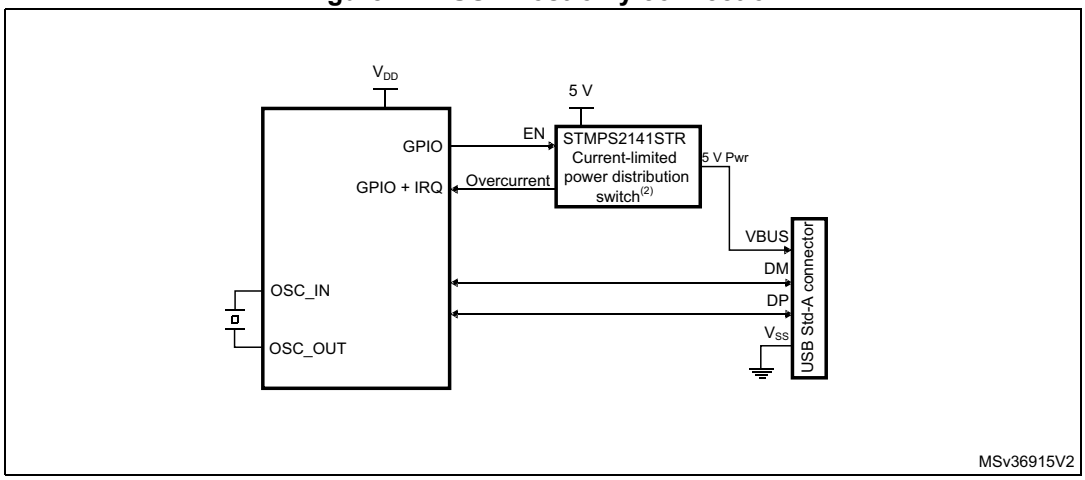

35.6.1 SRP-capable host

SRP support is available through the SRP capable bit in the global USB configuration register (SRPCAP bit in OTG_HS_GUSBCFG). When the SRP feature is enabled, the host can save power by switching off the V_{BUS} power while the USB session is suspended. The

SRP host mode program model is described in detail in *Section : A-device session request protocol*.

35.6.2 USB host states

Host port power

On-chip 5 V V_{BUS} generation is not supported. As a result, a charge pump or a basic power switch (if a 5 V supply voltage is available on the application board) must be added externally to drive the 5 V V_{BUS} line. The external charge pump can be driven by any GPIO output. When the application powers on V_{BUS} through the selected GPIO, it must also set the port power bit in the host port control and status register (PPWR bit in OTG_HS_HPRT).

V_{BUS} valid

When SRP or HNP is enabled the VBUS sensing pin (PB13) pin should be connected to V_{BUS}. The V_{BUS} input ensures that valid V_{BUS} levels are supplied by the charge pump during USB operations. Any unforeseen V_{BUS} voltage drop below the V_{BUS} valid threshold (4.25 V) generates an OTG interrupt triggered by the session end detected bit (SEDET bit in OTG_HS_GOTGINT). The application must then switch the V_{BUS} power off and clear the port power bit.

When HNP and SRP are both disabled, the VBUS sensing pin (PB13) should not be connected to V_{BUS}. This pin can be can be used as GPIO.

The charge pump overcurrent flag can also be used to prevent electrical damage. Connect the overcurrent flag output from the charge pump to any GPIO input, and configure it to generate a port interrupt on the active level. The overcurrent ISR must promptly disable the V_{BUS} generation and clear the port power bit.

Detection of peripheral connection by the host

If SRP or HNP are enabled, even if USB peripherals or B-devices can be attached at any time, the OTG_HS does not detect a bus connection until the end of the V_{BUS} sensing (V_{BUS} over 4.75 V).

When V_{BUS} is at a valid level and a remote B-device is attached, the OTG_HS core issues a host port interrupt triggered by the device connected bit in the host port control and status register (PCDET bit in OTG_HS_HPRT).

When HNP and SRP are both disabled, USB peripherals or B-device are detected as soon as they are connected. The OTG_FS core issues a host port interrupt triggered by the device connected bit in the host port control and status (PCDET bit in OTG_FS_HPRT).

Detection of peripheral disconnection by the host

The peripheral disconnection event triggers the disconnect detected interrupt (DISCINT bit in OTG_HS_GINTSTS).

Host enumeration

After detecting a peripheral connection, the host must start the enumeration process by issuing an USB reset and configuration commands to the new peripheral.

Before sending an USB reset, the application waits for the OTG interrupt triggered by the debounce done bit (DBCDNE bit in OTG_HS_GOTGINT), which indicates that the bus is

stable again after the electrical debounce caused by the attachment of a pull-up resistor on OTG_HS_FS_DP (full speed) or OTG_HS_FS_DM (low speed).

The application issues an USB reset (single-ended zero) via the USB by keeping the port reset bit set in the Host port control and status register (PRST bit in OTG_HS_HPRT) for a minimum of 10 ms and a maximum of 20 ms. The application monitors the time and then clears the port reset bit.

Once the USB reset sequence has completed, the host port interrupt is triggered by the port enable/disable change bit (PENCHNG bit in OTG_HS_HPRT) to inform the application that the speed of the enumerated peripheral can be read from the port speed field in the host port control and status register (PSPD bit in OTG_HS_HPRT), and that the host is starting to drive SOFs (full speed) or keep-alive tokens (low speed). The host is then ready to complete the peripheral enumeration by sending peripheral configuration commands.

Host suspend

The application can decide to suspend the USB activity by setting the port suspend bit in the host port control and status register (PSUSP bit in OTG_HS_HPRT). The OTG_HS core stops sending SOFs and enters the Suspended state.

The Suspended state can be exited on the remote device initiative (remote wakeup). In this case the remote wakeup interrupt (WKUPINT bit in OTG_HS_GINTSTS) is generated upon detection of a remote wakeup event, the port resume bit in the host port control and status register (PRES bit in OTG_HS_HPRT) is set, and a resume signaling is automatically issued on the USB. The application must monitor the resume window duration, and then clear the port resume bit to exit the Suspended state and restart the SOF.

If the Suspended state is exited on the host initiative, the application must set the port resume bit to start resume signaling on the host port, monitor the resume window duration and then clear the port resume bit.

35.6.3 Host channels

The OTG_HS core instantiates 12 host channels. Each host channel supports an USB host transfer (USB pipe). The host is not able to support more than 8 transfer requests simultaneously. If more than 8 transfer requests are pending from the application, the host controller driver (HCD) must re-allocate channels when they become available, that is, after receiving the transfer completed and channel halted interrupts.

Each host channel can be configured to support IN/OUT and any type of periodic/nonperiodic transaction. Each host channel has dedicated control (HCCHARx), transfer configuration (HCTSIZx) and status/interrupt (HCINTx) registers with associated mask (HCINTMSKx) registers.

Host channel controls

The following host channel controls are available through the host channel-x characteristics register (HCCHARx):

- Channel enable/disable
- Program the HS/FS/LS speed of target USB peripheral
- Program the address of target USB peripheral
- Program the endpoint number of target USB peripheral
- Program the transfer IN/OUT direction
- Program the USB transfer type (control, bulk, interrupt, isochronous)
- Program the maximum packet size (MPS)
- Program the periodic transfer to be executed during odd/even frames

Host channel transfer

The host channel transfer size registers (HCTSIZx) allow the application to program the transfer size parameters, and read the transfer status.

The programming operation must be performed before setting the channel enable bit in the host channel characteristics register. Once the endpoint is enabled, the packet count field is read-only as the OTG HS core updates it according to the current transfer status.

The following transfer parameters can be programmed:

- Transfer size in bytes
- Number of packets constituting the overall transfer size
- Initial data PID

Host channel status/interrupt

The host channel-x interrupt register (HCINTx) indicates the status of an endpoint with respect to USB- and AHB-related events. The application must read these register when the host channels interrupt bit in the core interrupt register (HCINT bit in OTG_HS_GINTSTS) is set. Before the application can read these registers, it must first read the host all channels interrupt (HCAINT) register to get the exact channel number for the host channel-x interrupt register. The application must clear the appropriate bit in this register to clear the corresponding bits in the HAINT and GINTSTS registers. The mask bits for each interrupt source of each channel are also available in the OTG_HS_HCINTMSK-x register.

The host core provides the following status checks and interrupt generation:

- Transfer completed interrupt, indicating that the data transfer is complete on both the application (AHB) and USB sides
- Channel stopped due to transfer completed, USB transaction error or disable command from the application
- Associated transmit FIFO half or completely empty (IN endpoints)
- ACK response received
- NAK response received
- STALL response received
- USB transaction error due to CRC failure, timeout, bit stuff error, false EOP
- Babble error
- Frame overrun
- Data toggle error

35.6.4 Host scheduler

The host core features a built-in hardware scheduler which is able to autonomously re-order and manage the USB the transaction requests posted by the application. At the beginning of each frame the host executes the periodic (isochronous and interrupt) transactions first, followed by the nonperiodic (control and bulk) transactions to achieve the higher level of priority granted to the isochronous and interrupt transfer types by the USB specification.

The host processes the USB transactions through request queues (one for periodic and one for nonperiodic). Each request queue can hold up to 8 entries. Each entry represents a pending transaction request from the application, and holds the IN or OUT channel number along with other information to perform a transaction on the USB. The order in which the requests are written to the queue determines the sequence of the transactions on the USB interface.

At the beginning of each frame, the host processes the periodic request queue first, followed by the nonperiodic request queue. The host issues an incomplete periodic transfer interrupt (IPXFR bit in OTG_HS_GINTSTS) if an isochronous or interrupt transaction scheduled for the current frame is still pending at the end of the current frame. The OTG HS core is fully responsible for the management of the periodic and nonperiodic request queues.The periodic transmit FIFO and queue status register (HPTXSTS) and nonperiodic transmit FIFO and queue status register (HNPTXSTS) are read-only registers which can be used by the application to read the status of each request queue. They contain:

- The number of free entries currently available in the periodic (nonperiodic) request queue (8 max)
- Free space currently available in the periodic (nonperiodic) Tx-FIFO (out-transactions)
- IN/OUT token, host channel number and other status information.

As request queues can hold a maximum of 8 entries each, the application can push to schedule host transactions in advance with respect to the moment they physically reach the USB for a maximum of 8 pending periodic transactions plus 8 pending nonperiodic transactions.

To post a transaction request to the host scheduler (queue) the application must check that there is at least 1 entry available in the periodic (nonperiodic) request queue by reading the PTXQSAV bits in the OTG_HS_HNPTXSTS register or NPTQXSAV bits in the OTG_HS_HNPTXSTS register.

35.7 SOF trigger

The OTG FS core allows to monitor, track and configure SOF framing in the host and peripheral. It also features an SOF pulse output connectivity.

These capabilities are particularly useful to implement adaptive audio clock generation techniques, where the audio peripheral needs to synchronize to the isochronous stream provided by the PC, or the host needs trimming its framing rate according to the requirements of the audio peripheral.

35.7.1 Host SOFs

In host mode the number of PHY clocks occurring between the generation of two consecutive SOF (FS) or keep-alive (LS) tokens is programmable in the host frame interval register (OTG_HS_HFIR), thus providing application control over the SOF framing period. An interrupt is generated at any start of frame (SOF bit in OTG_HS_GINTSTS). The current frame number and the time remaining until the next SOF are tracked in the host frame number register (OTG_HS_HFNUM).

An SOF pulse signal is generated at any SOF starting token and with a width of 20 HCLK cycles. It can be made available externally on the SOF pin using the SOFOUTEN bit in the global control and configuration register. The SOF pulse is also internally connected to the input trigger of timer 2 (TIM2), so that the input capture feature, the output compare feature and the timer can be triggered by the SOF pulse. The TIM2 connection is enabled through ITR1_RMP bits of TIM2_OR register.

Figure 412. SOF trigger output to TIM2 ITR1 connection

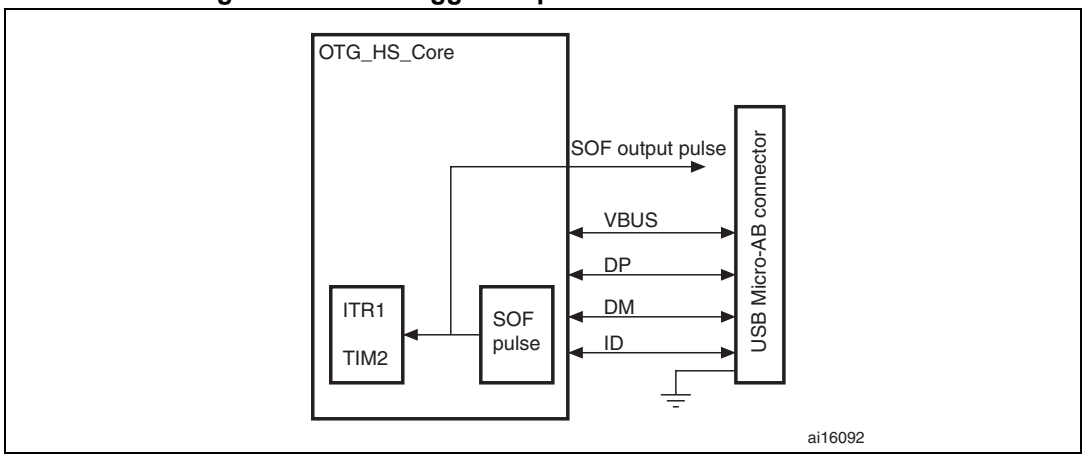

35.7.2 Peripheral SOFs

In peripheral mode, the start of frame interrupt is generated each time an SOF token is received on the USB (SOF bit in OTG_HS_GINTSTS). The corresponding frame number can be read from the device status register (FNSOF bit in OTG_HS_DSTS). An SOF pulse signal with a width of 20 HCLK cycles is also generated and can be made available externally on the SOF pin by using the SOF output enable bit in the global control and configuration register (SOFOUTEN bit in OTG_HS_GCCFG). The SOF pulse signal is also internally connected to the TIM2 input trigger, so that the input capture feature, the output compare feature and the timer can be triggered by the SOF pulse (see *Figure 412*). The TIM2 connection is enabled through ITR1_RMP bits of TIM2_OR register.

The end of periodic frame interrupt (GINTSTS/EOPF) is used to notify the application when 80%, 85%, 90% or 95% of the time frame interval elapsed depending on the periodic frame interval field in the device configuration register (PFIVL bit in OTG_HS_DCFG).

This feature can be used to determine if all of the isochronous traffic for that frame is complete.

35.8 OTG_HS low-power modes

Table 207 below defines the STM32 low power modes and their compatibility with the OTG.

Table 207. Compatibility of STM32 low power modes with the OTG

Mode	Description	USB compatibility
Run	MCU fully active	Required when USB not in suspend state.
Sleep	USB suspend exit causes the device to exit Sleep mode. Peripheral registers content is kept.	Available while USB is in suspend state.
Stop	USB suspend exit causes the device to exit Stop mode. Peripheral registers content is kept(1).	Available while USB is in suspend state.
Standby	Powered-down. The peripheral must be reinitialized after exiting Standby mode.	Not compatible with USB applications.

1. Within Stop mode there are different possible settings. Some restrictions may also exist, please refer to *Section 5: Power controller (PWR)* to understand which (if any) restrictions apply when using OTG.

The following bits and procedures reduce power consumption.

The power consumption of the OTG PHY is controlled by three bits in the general core configuration register:

- PHY power down (GCCFG/PWRDWN)

  This bit switches on/off the PHY full-speed transceiver module. It must be preliminarily set to allow any USB operation.
- A-VBUS sensing enable (GCCFG/VBUSASEN)

  This bit switches on/off the V_{BUS} comparators associated with A-device operations. It must be set when in A-device (USB host) mode and during HNP.
- B-VBUS sensing enable (GCCFG/VBUSASEN)

  This bit switches on/off the V_{BUS} comparators associated with B-device operations. It must be set when in B-device (USB peripheral) mode and during HNP.

  Power reduction techniques are available in the USB suspended state, when the USB session is not yet valid or the device is disconnected.
- Stop PHY clock (STPPCLK bit in OTG_HS_PCGCCTL)
  - When setting the stop PHY clock bit in the clock gating control register, most of the clock domain internal to the OTG high-speed core is switched off by clock gating.

The dynamic power consumption due to the USB clock switching activity is cut even if the clock input is kept running by the application

– Most of the transceiver is also disabled, and only the part in charge of detecting the asynchronous resume or remote wakeup event is kept alive.

- Gate HCLK (GATEHCLK bit in OTG_HS_PCGCCTL)

  When setting the Gate HCLK bit in the clock gating control register, most of the system clock domain internal to the OTG_HS core is switched off by clock gating. Only the register read and write interface is kept alive. The dynamic power consumption due to the USB clock switching activity is cut even if the system clock is kept running by the application for other purposes.

- USB system stop
  – When the OTG_HS is in USB suspended state, the application can decide to drastically reduce the overall power consumption by shutting down all the clock sources in the system. USB System Stop is activated by first setting the Stop PHY clock bit and then configuring the system deep sleep mode in the powercontrol system module (PWR).
  – The OTG_HS core automatically reactivates both system and USB clocks by asynchronous detection of remote wakeup (as an host) or resume (as a Device) signaling on the USB.

35.9 Dynamic update of the OTG_HS_HFIR register

The USB core embeds a dynamic trimming capability of micro-SOF framing period in host mode allowing to synchronize an external device with the micro-SOF frames.

When the OTG_HS_HFIR register is changed within a current micro-SOF frame, the SOF period correction is applied in the next frame as described in *Figure 413*.

Figure 413. Updating OTG_HS_HFIR dynamically

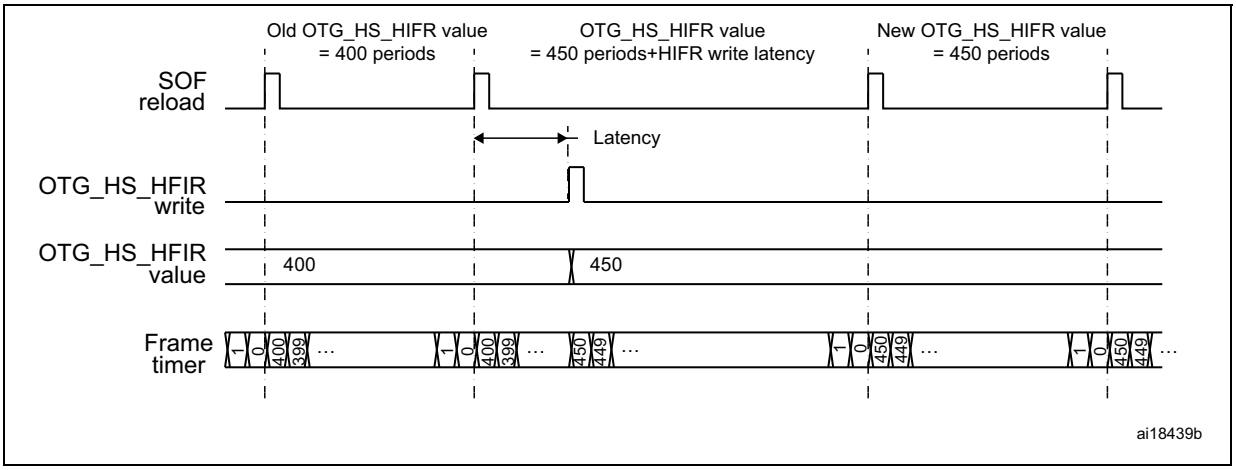

35.10 FIFO RAM allocation

35.10.1 Peripheral mode

Receive FIFO RAM

For Receive FIFO RAM, the application should allocate RAM for SETUP packets: 10 locations must be reserved in the receive FIFO to receive SETUP packets on control endpoints. These locations are reserved for SETUP packets and are not used by the core to write any other data.

One location must be allocated for Global OUT NAK. Status information are also written to the FIFO along with each received packet. Therefore, a minimum space of (Largest Packet Size / 4) + 1 must be allocated to receive packets. If a high-bandwidth endpoint or multiple isochronous endpoints are enabled, at least two spaces of (Largest Packet Size / 4) + 1 must be allotted to receive back-to-back packets. Typically, two (Largest Packet Size / 4) + 1 spaces are recommended so that when the previous packet is being transferred to AHB, the USB can receive the subsequent packet.

Along with each endpoints last packet, transfer complete status information are also pushed to the FIFO. Typically, one location for each OUT endpoint is recommended.

Transmit FIFO RAM

For Transmit FIFO RAM, the minimum RAM space required for each IN Endpoint Transmit FIFO is the maximum packet size for this IN endpoint.

Note: More space allocated in the transmit IN Endpoint FIFO results in a better performance on the USB.

35.10.2 Host mode

Receive FIFO RAM

For Receive FIFO RAM allocation, Status information are written to the FIFO along with each received packet. Therefore, a minimum space of (Largest Packet Size / 4) + 1 must be allocated to receive packets. If a high-bandwidth channel or multiple isochronous channels are enabled, at least two spaces of (Largest Packet Size / 4) + 1 must be allocated to receive back-to-back packets. Typically, two (Largest Packet Size / 4) + 1 spaces are recommended so that when the previous packet is being transferred to AHB, the USB can receive the subsequent packet.

Along with each host channels last packet, transfer complete status information are also pushed to the FIFO. As a consequence, one location must be allocated to store this data.

Transmit FIFO RAM

For Transmit FIFO RAM allocation, the minimum amount of RAM required for the host nonperiodic Transmit FIFO is the largest maximum packet size for all supported nonperiodic OUT channels. Typically, a space corresponding to two Largest Packet Size is recommended, so that when the current packet is being transferred to the USB, the AHB can transmit the subsequent packet.

The minimum amount of RAM required for Host periodic Transmit FIFO is the largest maximum packet size for all supported periodic OUT channels. If there is at least one High

Bandwidth Isochronous OUT endpoint, then the space must be at least two times the maximum packet size for that channel.

Note: More space allocated in the Transmit nonperiodic FIFO results in better performance on the USB.

When operating in DMA mode, the DMA address register for each host channel (HCDMAn) is stored in the SPRAM (FIFO). One location for each channel must be reserved for this.

35.11 OTG_HS interrupts

When the OTG_HS controller is operating in one mode, either peripheral or host, the application must not access registers from the other mode. If an illegal access occurs, a mode mismatch interrupt is generated and reflected in the Core interrupt register (MMIS bit in the OTG_HS_GINTSTS register). When the core switches from one mode to the other, the registers in the new mode of operation must be reprogrammed as they would be after a power-on reset.

Figure 414 shows the interrupt hierarchy.

Figure 414. Interrupt hierarchy

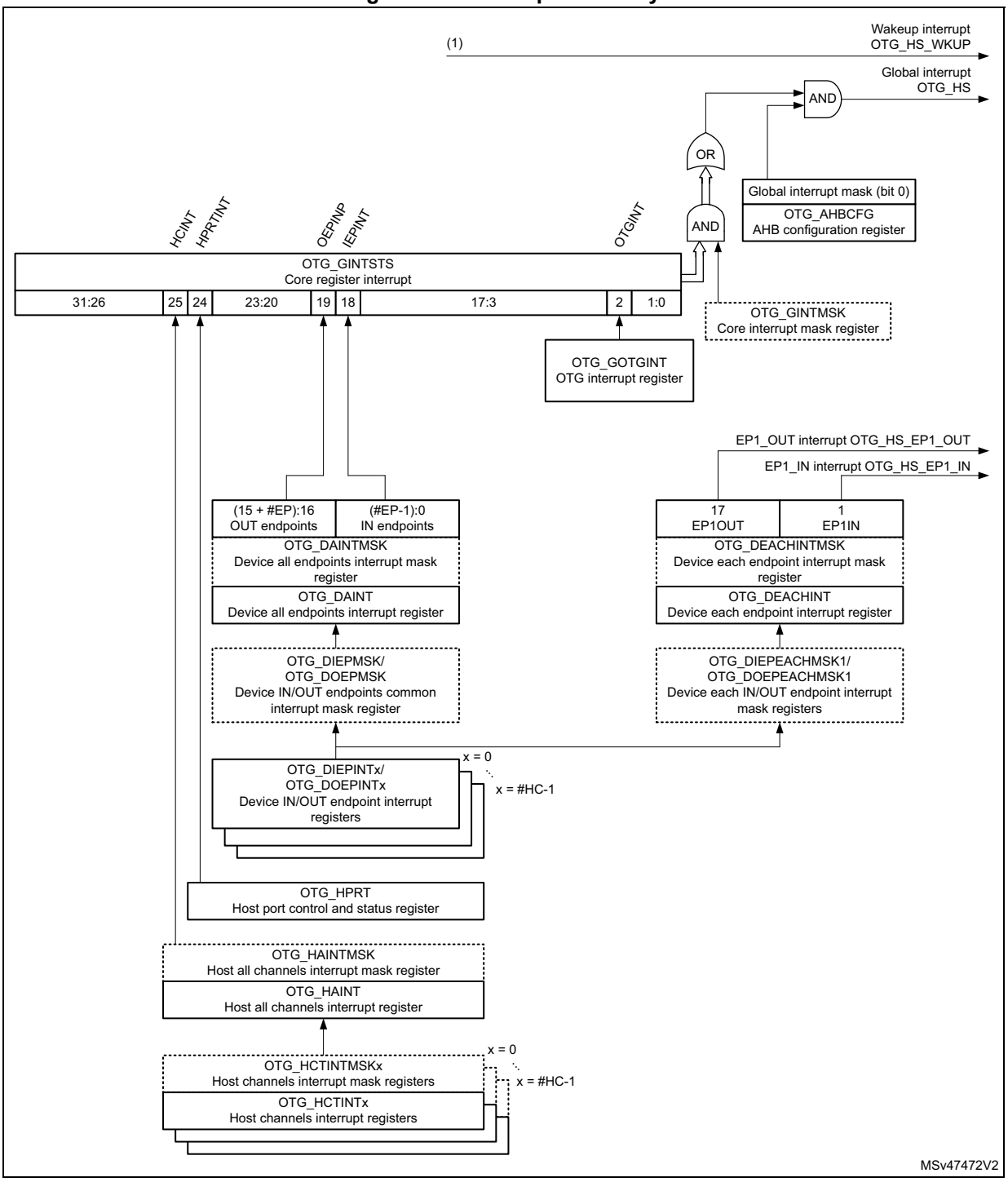

1. OTG_HS_WKUP becomes active (high state) when resume condition occurs during L1 SLEEP or L2 SUSPEND states.

35.12 OTG_HS control and status registers

By reading from and writing to the control and status registers (CSRs) through the AHB slave interface, the application controls the OTG_HS controller. These registers are 32 bits wide, and the addresses are 32-bit block aligned. The OTG_HS registers must be accessed by words (32 bits). CSRs are classified as follows:

- Core global registers
- Host-mode registers
- Host global registers
- Host port CSRs
- Host channel-specific registers
- Device-mode registers
- Device global registers
- Device endpoint-specific registers
- Power and clock-gating registers
- Data FIFO (DFIFO) access registers

Only the Core global, Power and clock-gating, Data FIFO access, and host port control and status registers can be accessed in both host and peripheral modes. When the OTG_HS controller is operating in one mode, either peripheral or host, the application must not access registers from the other mode. If an illegal access occurs, a mode mismatch interrupt is generated and reflected in the Core interrupt register (MMIS bit in the OTG_HS_GINTSTS register). When the core switches from one mode to the other, the registers in the new mode of operation must be reprogrammed as they would be after a power-on reset.

35.12.1 CSR memory map

The host and peripheral mode registers occupy different addresses. All registers are implemented in the AHB clock domain.

Figure 415. CSR memory map

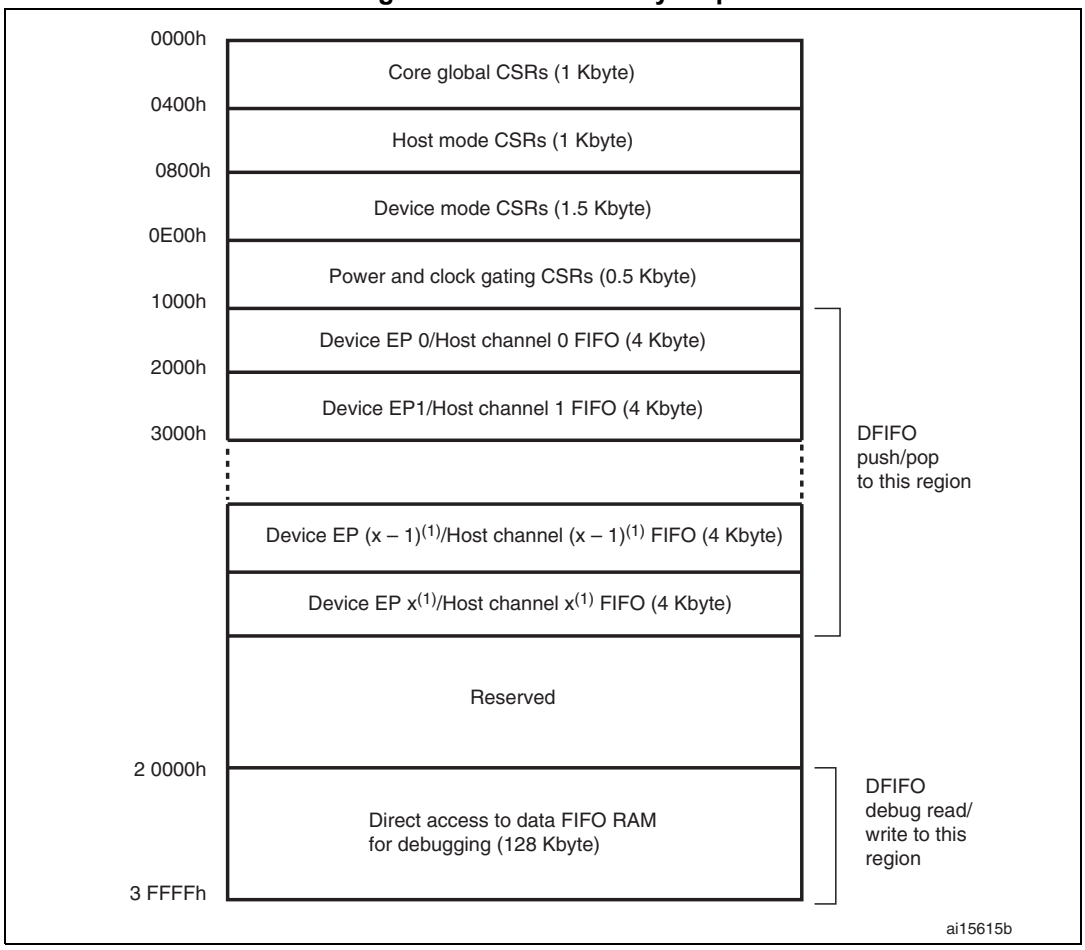

1. x = 5 in peripheral mode and x = 11 in host mode.

Global CSR map

These registers are available in both host and peripheral modes.

Table 208. Core global control and status registers (CSRs)

Acronym	Address offset	Register name
OTG_HS_GOTGCTL	0x000	*OTG_HS control and status register (OTG_HS_GOTGCTL) on page 1408*
OTG_HS_GOTGINT	0x004	*OTG_HS interrupt register (OTG_HS_GOTGINT) on page 1409*
OTG_HS_GAHBCFG	0x008	*OTG_HS AHB configuration register (OTG_HS_GAHBCFG) on page 1411*
OTG_HS_GUSBCFG	0x00C	*OTG_HS USB configuration register (OTG_HS_GUSBCFG) on page 1412*
OTG_HS_GRSTCTL	0x010	*OTG_HS reset register (OTG_HS_GRSTCTL) on page 1415*
OTG_HS_GINTSTS	0x014	*OTG_HS core interrupt register (OTG_HS_GINTSTS) on page 1418*
OTG_HS_GINTMSK	0x018	*OTG_HS interrupt mask register (OTG_HS_GINTMSK) on page 1422*

Table 208. Core global control and status registers (CSRs) (continued)

Acronym	Address offset	Register name
OTG_HS_GRXSTSR	0x01C	*OTG_HS Receive status debug read/OTG status read and pop registers (OTG_HS_GRXSTSR/OTG_HS_GRXSTSP) on page 1425*
OTG_HS_GRXSTSP	0x020	
OTG_HS_GRXFSIZ	0x024	*OTG_HS Receive FIFO size register (OTG_HS_GRXFSIZ) on page 1426*
OTG_HS_GNPTXFSIZ/ OTG_HS_TX0FSIZ	0x028	*OTG_HS nonperiodic transmit FIFO size/Endpoint 0 transmit FIFO size register (OTG_HS_GNPTXFSIZ/OTG_HS_TX0FSIZ) on page 1427*
OTG_HS_GNPTXSTS	0x02C	*OTG_HS nonperiodic transmit FIFO/queue status register (OTG_HS_GNPTXSTS) on page 1427*
OTG_HS_GCCFG	0x038	*OTG_HS general core configuration register (OTG_HS_GCCFG) on page 1428*
OTG_HS_CID	0x03C	*OTG_HS core ID register (OTG_HS_CID) on page 1429*
OTG_HS_HPTXFSIZ	0x100	*OTG_HS Host periodic transmit FIFO size register (OTG_HS_HPTXFSIZ) on page 1429*
OTG_HS_DIEPTXFx	0x104 0x108 ... 0x114	*OTG_HS device IN endpoint transmit FIFO size register (OTG_HS_DIEPTXFx) (x = 1..5, where x is the FIFO_number) on page 1430*

Host-mode CSR map

These registers must be programmed every time the core changes to host mode.

Table 209. Host-mode control and status registers (CSRs)

Acronym	Offset address	Register name
OTG_HS_HCFG	0x400	*OTG_HS host configuration register (OTG_HS_HCFG) on page 1430*
OTG_HS_HFIR	0x404	*OTG_HS Host frame interval register (OTG_HS_HFIR) on page 1432*
OTG_HS_HFNUM	0x408	*OTG_HS host frame number/frame time remaining register (OTG_HS_HFNUM) on page 1432*
OTG_HS_HPTXSTS	0x410	*OTG_HS_Host periodic transmit FIFO/queue status register (OTG_HS_HPTXSTS) on page 1433*
OTG_HS_HAINT	0x414	*OTG_HS Host all channels interrupt register (OTG_HS_HAINT) on page 1434*
OTG_HS_HAINTMSK	0x418	*OTG_HS host all channels interrupt mask register (OTG_HS_HAINTMSK) on page 1434*
OTG_HS_HPRT	0x440	*OTG_HS host port control and status register (OTG_HS_HPRT) on page 1435*

Table 209. Host-mode control and status registers (CSRs) (continued)

Acronym	Offset address	Register name
OTG_HS_HCCHARx	0x500 0x520 ... 0x660	*OTG_HS host channel-x characteristics register (OTG_HS_HCCHARx) (x = 0..11, where x = Channel_number) on page 1437*
OTG_HS_HCSPLTx	0x504	*OTG_HS host channel-x split control register (OTG_HS_HCSPLTx) (x = 0..11, where x = Channel_number) on page 1439*
OTG_HS_HCINTx	0x508	*OTG_HS host channel-x interrupt register (OTG_HS_HCINTx) (x = 0..11, where x = Channel_number) on page 1440*
OTG_HS_HCINTMSKx	0x50C	*OTG_HS host channel-x interrupt mask register (OTG_HS_HCINTMSKx) (x = 0..11, where x = Channel_number) on page 1441*
OTG_HS_HCTSIZx	0x510	*OTG_HS host channel-x transfer size register (OTG_HS_HCTSIZx) (x = 0..11, where x = Channel_number) on page 1442*
OTG_HS_HCDMAx	0x514	*OTG_HS host channel-x DMA address register (OTG_HS_HCDMAx) (x = 0..11, where x = Channel_number) on page 1443*

Device-mode CSR map

These registers must be programmed every time the core changes to peripheral mode.

Table 210. Device-mode control and status registers

Acronym	Offset address	Register name
OTG_HS_DCFG	0x800	*OTG_HS device configuration register (OTG_HS_DCFG) on page 1443*
OTG_HS_DCTL	0x804	*OTG_HS device control register (OTG_HS_DCTL) on page 1445*
OTG_HS_DSTS	0x808	*OTG_HS device status register (OTG_HS_DSTS) on page 1447*
OTG_HS_DIEPMSK	0x810	*OTG_HS device IN endpoint common interrupt mask register (OTG_HS_DIEPMSK) on page 1448*
OTG_HS_DOEPMSK	0x814	*OTG_HS device OUT endpoint common interrupt mask register (OTG_HS_DOEPMSK) on page 1449*
OTG_HS_DAINT	0x818	*OTG_HS device all endpoints interrupt register (OTG_HS_DAINT) on page 1450*
OTG_HS_DAINTMSK	0x81C	*OTG_HS all endpoints interrupt mask register (OTG_HS_DAINTMSK) on page 1451*
OTG_HS_DVBUSDIS	0x828	*OTG_HS device V_{BUS} discharge time register (OTG_HS_DVBUSDIS) on page 1451*
OTG_HS_DVBUSPULSE	0x82C	*OTG_HS device V_{BUS} pulsing time register (OTG_HS_DVBUSPULSE) on page 1452*
OTG_HS_DTHRCTL	0x830	*OTG_HS Device threshold control register (OTG_HS_DTHRCTL) on page 1453*

Table 210. Device-mode control and status registers (continued)

Acronym	Offset address	Register name
OTG_HS_DIEPEMPMSK	0x834	*OTG_HS device IN endpoint FIFO empty interrupt mask register: (OTG_HS_DIEPEMPMSK) on page 1454*
OTG_HS_DEACHINT	0x838	*OTG_HS device each endpoint interrupt register (OTG_HS_DEACHINT) on page 1454*
OTG_HS_DEACHINTMSK	0x83C	*OTG_HS device each endpoint interrupt register mask (OTG_HS_DEACHINTMSK) on page 1455*
OTG_HS_DIEPEACHMSK1	0x844	*OTG_HS device each in endpoint-1 interrupt register (OTG_HS_DIEPEACHMSK1) on page 1455*
OTG_HS_DOEPEACHMSK1	0x884	*OTG_HS device each OUT endpoint-1 interrupt register (OTG_HS_DOEPEACHMSK1) on page 1456*
OTG_HS_DIEPCTLx	0x900 0x920 ... 0x9A0	*OTG device endpoint-x control register (OTG_HS_DIEPCTLx) (x = 0..5, where x = Endpoint_number) on page 1457*
OTG_HS_DIEPINTx	0x908	*OTG_HS device endpoint-x interrupt register (OTG_HS_DIEPINTx) (x = 0..5, where x = Endpoint_number) on page 1464*
OTG_HS_DIEPTSIZ0	0x910	*OTG_HS device IN endpoint 0 transfer size register (OTG_HS_DIEPTSIZ0) on page 1467*
OTG_HS_DIEPDMAx/ OTG_HS_DOEPDMAx	0x914/0xB14	*OTG_HS device endpoint-x DMA address register (OTG_HS_DIEPDMAx / OTG_HS_DOEPDMAx) (x = 0..5, where x = Endpoint_number) on page 1471*
OTG_HS_DTXFSTSx	0x918	*OTG_HS device IN endpoint transmit FIFO status register (OTG_HS_DTXFSTSx) (x = 0..5, where x = Endpoint_number) on page 1470*
OTG_HS_DIEPTSIZx	0x930 0x950 ... 0x9B0	*OTG_HS device endpoint-x transfer size register (OTG_HS_DIEPTSIZx) (x = 1..5, where x = Endpoint_number) on page 1469*
OTG_HS_DOEPCTL0	0xB00	*OTG_HS device control OUT endpoint 0 control register (OTG_HS_DOEPCTL0) on page 1460*
OTG_HS_DOEPSIZ0	0xB10	*OTG_HS device OUT endpoint 0 transfer size register (OTG_HS_DOEPTSIZ0) on page 1468*
OTG_HS_DOEPCTLx	0xB20 0xB40 ... 0xBA0	*OTG_HS device endpoint-x control register (OTG_HS_DOEPCTLx) (x = 1..5, where x = Endpoint_number) on page 1461*

Table 210. Device-mode control and status registers (continued)

Acronym	Offset address	Register name
OTG_HS_DOEPINTx	0xB08 0xB28 ... 0xBA8	*OTG_HS device endpoint-x interrupt register (OTG_HS_DOEPINTx) (x = 0..5, where x = Endpoint_number) on page 1466*
OTG_HS_DOEPTSIZx	0xB30 0xB50 ... 0xBB0	*OTG_HS device endpoint-x transfer size register (OTG_HS_DOEPTSIZx) (x = 1..5, where x = Endpoint_number) on page 1470*

Data FIFO (DFIFO) access register map

These registers, available in both host and peripheral modes, are used to read or write the FIFO space for a specific endpoint or a channel, in a given direction. If a host channel is of type IN, the FIFO can only be read on the channel. Similarly, if a host channel is of type OUT, the FIFO can only be written on the channel.

Table 211. Data FIFO (DFIFO) access register map

FIFO access register section	Address range	Access
Device IN Endpoint 0/Host OUT Channel 0: DFIFO Write Access Device OUT Endpoint 0/Host IN Channel 0: DFIFO Read Access	0x1000–0x1FFC	w r
Device IN Endpoint 1/Host OUT Channel 1: DFIFO Write Access Device OUT Endpoint 1/Host IN Channel 1: DFIFO Read Access	0x2000–0x2FFC	w r
...	...	...
Device IN Endpoint x(1)/Host OUT Channel x(1): DFIFO Write Access Device OUT Endpoint x(1)/Host IN Channel x(1): DFIFO Read Access	0xX000–0xXFFC	w r

1. Where x is 5 in peripheral mode and 11 in host mode.

Power and clock gating CSR map

There is a single register for power and clock gating. It is available in both host and peripheral modes.

Table 212. Power and clock gating control and status registers

Register name	Acronym	Offset address: 0xE00–0xFFF
Power and clock gating control register	OTG_HS_PCGCCTL	0xE00-0xE04
Reserved	-	0xE05–0xFFF

35.12.2 OTG_HS global registers

These registers are available in both host and peripheral modes, and do not need to be reprogrammed when switching between these modes.

Bit values in the register descriptions are expressed in binary unless otherwise specified.

OTG_HS control and status register (OTG_HS_GOTGCTL)

Address offset: 0x000

Reset value: 0x0001 0000

The OTG control and status register controls the behavior and reflects the status of the OTG function of the core.

31	30	29	28	27	26	25	24	23	22	21	20	19	18	17	16	15	14	13	12	11	10	9	8	7	6	5	4	3	2	1	0
Reserved												BSVLD	ASVLD	DBCT	CIDSTS	Reserved				DHNPEN	HSHNPEN	HNPRQ	HNGSCS	Reserved						SRQ	SRQSCS
												r	r	r	r					rw	rw	rw	r							rw	r

Bits 31:20 Reserved, must be kept at reset value.

Bit 19 **BSVLD:** B-session valid

Indicates the peripheral mode transceiver status.
0: B-session is not valid.
1: B-session is valid.
In OTG mode, you can use this bit to determine if the device is connected or disconnected.

Note: Only accessible in peripheral mode.

Bit 18 **ASVLD:** A-session valid

Indicates the host mode transceiver status.
0: A-session is not valid
1: A-session is valid

Note: Only accessible in host mode.

Bit 17 **DBCT:** Long/short debounce time

Indicates the debounce time of a detected connection.
0: Long debounce time, used for physical connections (100 ms + 2.5 µs)
1: Short debounce time, used for soft connections (2.5 µs)

Note: Only accessible in host mode.

Bit 16 **CIDSTS:** Connector ID status

Indicates the connector ID status on a connect event.
0: The OTG_HS controller is in A-device mode
1: The OTG_HS controller is in B-device mode

Note: Accessible in both peripheral and host modes.

Bits 15:12 Reserved, must be kept at reset value.

Bit 11 **DHNPEN:** Device HNP enabled

The application sets this bit when it successfully receives a SetFeature.SetHNPEnable command from the connected USB host.
0: HNP is not enabled in the application
1: HNP is enabled in the application

Note: Only accessible in peripheral mode.

Bit 10 **HSHNPEN:** Host set HNP enable

The application sets this bit when it has successfully enabled HNP (using the SetFeature.SetHNPEnable command) on the connected device.

0: Host Set HNP is not enabled

1: Host Set HNP is enabled

Note: Only accessible in host mode.

Bit 9 **HNPRQ:** HNP request

The application sets this bit to initiate an HNP request to the connected USB host. The application can clear this bit by writing a 0 when the host negotiation success status change bit in the OTG interrupt register (HNSSCHG bit in OTG_HS_GOTGINT) is set. The core clears this bit when the HNSSCHG bit is cleared.

0: No HNP request

1: HNP request

Note: Only accessible in peripheral mode.

Bit 8 **HNGSCS:** Host negotiation success

The core sets this bit when host negotiation is successful. The core clears this bit when the HNP Request (HNPRQ) bit in this register is set.

0: Host negotiation failure

1: Host negotiation success

Note: Only accessible in peripheral mode.

Bits 7:2 Reserved, must be kept at reset value.

Bit 1 **SRQ:** Session request

The application sets this bit to initiate a session request on the USB. The application can clear this bit by writing a 0 when the host negotiation success status change bit in the OTG Interrupt register (HNSSCHG bit in OTG_HS_GOTGINT) is set. The core clears this bit when the HNSSCHG bit is cleared.

If you use the USB 1.1 full-speed serial transceiver interface to initiate the session request, the application must wait until V_{BUS} discharges to 0.2 V, after the B-Session Valid bit in this register (BSVLD bit in OTG_HS_GOTGCTL) is cleared.

0: No session request

1: Session request

Note: Only accessible in peripheral mode.

Bit 0 **SRQSCS:** Session request success

The core sets this bit when a session request initiation is successful.

0: Session request failure

1: Session request success

Note: Only accessible in peripheral mode.

OTG_HS interrupt register (OTG_HS_GOTGINT)

Address offset: 0x04

Reset value: 0x0000 0000

The application reads this register whenever there is an OTG interrupt and clears the bits in this register to clear the OTG interrupt.

31	30	29	28	27	26	25	24	23	22	21	20	19	18	17	16	15	14	13	12	11	10	9	8	7	6	5	4	3	2	1	0
Reserved												DBCDNE	ADTOCHG	HNGDET	Reserved							HNSSCHG	SRSSCHG	Reserved					SEDET	Res.	
												rc_w1	rc_w1	rc_w1								rc_w1	rc_w1						rc_w1		

Bits 31:20 Reserved, must be kept at reset value.

Bit 19 **DBCDNE:** Debounce done

The core sets this bit when the debounce is completed after the device connect. The application can start driving USB reset after seeing this interrupt. This bit is only valid when the HNP Capable or SRP Capable bit is set in the Core USB Configuration register (HNPCAP bit or SRPCAP bit in OTG_HS_GUSBCFG, respectively).

Note: Only accessible in host mode.

Bit 18 **ADTOCHG:** A-device timeout change

The core sets this bit to indicate that the A-device has timed out while waiting for the B-device to connect.

Note: Accessible in both peripheral and host modes.

Bit 17 **HNGDET:** Host negotiation detected

The core sets this bit when it detects a host negotiation request on the USB.

Note: Accessible in both peripheral and host modes.

Bits 16:10 Reserved, must be kept at reset value.

Bit 9 **HNSSCHG:** Host negotiation success status change

The core sets this bit on the success or failure of a USB host negotiation request. The application must read the host negotiation success bit of the OTG Control and Status register (HNGSCS in OTG_HS_GOTGCTL) to check for success or failure.

Note: Accessible in both peripheral and host modes.

Bits 7:3 Reserved, must be kept at reset value.

Bit 8 **SRSSCHG:** Session request success status change

The core sets this bit on the success or failure of a session request. The application must read the session request success bit in the OTG Control and status register (SRQSCS bit in OTG_HS_GOTGCTL) to check for success or failure.

Note: Accessible in both peripheral and host modes.

Bit 2 **SEDET:** Session end detected

The core sets this bit to indicate that the level of the voltage on V_{BUS} is no longer valid for a B-device session when $V_{BUS} < 0.8$ V.

Bits 1:0 Reserved, must be kept at reset value.

OTG_HS AHB configuration register (OTG_HS_GAHBCFG)

Address offset: 0x008

Reset value: 0x0000 0000

This register can be used to configure the core after power-on or a change in mode. This register mainly contains AHB system-related configuration parameters. Do not change this register after the initial programming. The application must program this register before starting any transactions on either the AHB or the USB.

31	30	29	28	27	26	25	24	23	22	21	20	19	18	17	16	15	14	13	12	11	10	9	8	7	6	5	4	3	2	1	0
Reserved																							PTXFELVL	TXFELVL	Reserved	DMAEN	HBSTLEN				GINT
																							rw	rw		rw	rw	rw	rw	rw	rw

Bits 31:20 Reserved, must be kept at reset value.

Bit 8 **PTXFELVL:** Periodic TxFIFO empty level

Indicates when the periodic TxFIFO empty interrupt bit in the Core interrupt register (PTXFE bit in OTG_HS_GINTSTS) is triggered.

0: PTXFE (in OTG_HS_GINTSTS) interrupt indicates that the Periodic TxFIFO is half empty

1: PTXFE (in OTG_HS_GINTSTS) interrupt indicates that the Periodic TxFIFO is completely empty

Note: Only accessible in host mode.

Bit 7 **TXFELVL:** TxFIFO empty level

In peripheral mode, this bit indicates when the IN endpoint Transmit FIFO empty interrupt (TXFE in OTG_HS_DIEPINTx.) is triggered.

0: TXFE (in OTG_HS_DIEPINTx) interrupt indicates that the IN Endpoint TxFIFO is half empty

1: TXFE (in OTG_HS_DIEPINTx) interrupt indicates that the IN Endpoint TxFIFO is completely empty

Note: Only accessible in peripheral mode.

Bit 6 Reserved, must be kept at reset value.

Bits5 **DMAEN:** DMA enable

0: The core operates in slave mode

1: The core operates in DMA mode

Bits 4:1 **HBSTLEN:** Burst length/type

0000 Single

0001 INCR

0011 INCR4

0101 INCR8

0111 INCR16

Others: Reserved

Bit 0 **GINT:** Global interrupt mask

This bit is used to mask or unmask the interrupt line assertion to the application. Irrespective of this bit setting, the interrupt status registers are updated by the core.

0: Mask the interrupt assertion to the application.

1: Unmask the interrupt assertion to the application

Note: Accessible in both peripheral and host modes.

OTG_HS USB configuration register (OTG_HS_GUSBCFG)

Address offset: 0x00C

Reset value: 0x0000 1440

This register can be used to configure the core after power-on or a changing to host mode or peripheral mode. It contains USB and USB-PHY related configuration parameters. The application must program this register before starting any transactions on either the AHB or the USB. Do not make changes to this register after the initial programming.

31	30	29	28	27	26	25	24	23	22	21	20	19	18	17	16	15	14	13	12	11	10	9	8	7	6	5	4	3	2	1	0
CTXPKT	FDMOD	FHMOD	Reserved			ULPIIPD	PTCI	PCCI	TSDPS	ULPIEVBUSI	ULPIEVBUSD	ULPICSM	ULPIAR	ULPIFSLS	Reserved	PHYLPCS	Reserved	TRDT				HNPCAP	SRPCAP	Reserved	PHYSEL	Reserved			TOCAL		
rw	rw	rw				rw	rw	rw	rw	rw	rw	rw	rw	rw		rw		rw				rw	rw		rw				rw		

Bit 31 **CTXPKT:** Corrupt Tx packet

This bit is for debug purposes only. Never set this bit to 1.

Note: Accessible in both peripheral and host modes.

Bit 30 **FDMOD:** Forced peripheral mode

Writing a 1 to this bit forces the core to peripheral mode irrespective of the OTG_HS_ID input pin.

0: Normal mode

1: Forced peripheral mode

After setting the force bit, the application must wait at least 25 ms before the change takes effect.

Note: Accessible in both peripheral and host modes.

Bit 29 **FHMOD:** Forced host mode

Writing a 1 to this bit forces the core to host mode irrespective of the OTG_HS_ID input pin.

0: Normal mode

1: Forced host mode

After setting the force bit, the application must wait at least 25 ms before the change takes effect.

Note: Accessible in both peripheral and host modes.

Bits 28:26 Reserved, must be kept at reset value.

Bit 25 **ULPIIPD:** ULPI interface protect disable

This bit controls the circuitry built in the PHY to protect the ULPI interface when the link tri-states stp and data. Any pull-up or pull-down resistors employed by this feature can be disabled. Please refer to the ULPI specification for more details.

0: Enables the interface protection circuit

1: Disables the interface protection circuit

Bit 24 **PTCI:** Indicator pass through

This bit controls whether the complement output is qualified with the internal V_{BUS} valid comparator before being used in the V_{BUS} state in the RX CMD. Please refer to the ULPI specification for more details.

0: Complement Output signal is qualified with the Internal V_{BUS} valid comparator

1: Complement Output signal is not qualified with the Internal V_{BUS} valid comparator

Bit 23 **PCCI:** Indicator complement

This bit controls the PHY to invert the ExternalVbusIndicator input signal, and generate the complement output. Please refer to the ULPI specification for more details.
0: PHY does not invert the ExternalVbusIndicator signal
1: PHY inverts ExternalVbusIndicator signal

Bit 22 **TSDPS**: TermSel DLine pulsing selection

This bit selects utmi_termselect to drive the data line pulse during SRP (session request protocol).
0: Data line pulsing using utmi_txvalid (default)
1: Data line pulsing using utmi_termsel

Bit 21 **ULPIEVBUSI:** ULPI external V_{BUS} indicator

This bit indicates to the ULPI PHY to use an external V_{BUS} overcurrent indicator.
0: PHY uses an internal V_{BUS} valid comparator
1: PHY uses an external V_{BUS} valid comparator

Bit 20 **ULPIEVBUSD:** ULPI External V_{BUS} Drive

This bit selects between internal or external supply to drive 5 V on V_{BUS}, in the ULPI PHY.
0: PHY drives V_{BUS} using internal charge pump (default)
1: PHY drives V_{BUS} using external supply.

Bit 19 **ULPICSM:** ULPI Clock SuspendM

This bit sets the ClockSuspendM bit in the interface control register on the ULPI PHY. This bit applies only in the serial and carkit modes.
0: PHY powers down the internal clock during suspend
1: PHY does not power down the internal clock

Bit 18 **ULPIAR:** ULPI Auto-resume

This bit sets the AutoResume bit in the interface control register on the ULPI PHY.
0: PHY does not use AutoResume feature
1: PHY uses AutoResume feature

Bit 17 **ULPIFSLS:** ULPI FS/LS select

The application uses this bit to select the FS/LS serial interface for the ULPI PHY. This bit is valid only when the FS serial transceiver is selected on the ULPI PHY.
0: ULPI interface
1: ULPI FS/LS serial interface

Bit 16 Reserved, must be kept at reset value.

Bit 15 **PHYLPCS:** PHY Low-power clock select

This bit selects either 480 MHz or 48 MHz (low-power) PHY mode. In FS and LS modes, the PHY can usually operate on a 48 MHz clock to save power.
0: 480 MHz internal PLL clock
1: 48 MHz external clock
In 480 MHz mode, the UTMI interface operates at either 60 or 30 MHz, depending on whether the 8- or 16-bit data width is selected. In 48 MHz mode, the UTMI interface operates at 48 MHz in FS and LS modes.

Bit 14 Reserved, must be kept at reset value.

Bits 13:10 **TRDT:** USB turnaround time

These bits allows to set the turnaround time in PHY clocks. They must be configured according to *Table 213: TRDT values*, depending on the application AHB frequency. Higher TRDT values allow stretching the USB response time to IN tokens in order to compensate for longer AHB read access latency to the Data FIFO.

Bit 9 **HNPCAP:** HNP-capable

The application uses this bit to control the OTG_HS controller's HNP capabilities.

0: HNP capability is not enabled

1: HNP capability is enabled

Note: Accessible in both peripheral and host modes.

Bit 8 **SRPCAP:** SRP-capable

The application uses this bit to control the OTG_HS controller's SRP capabilities. If the core operates as a nonSRP-capable B-device, it cannot request the connected A-device (host) to activate V_{BUS} and start a session.

0: SRP capability is not enabled

1: SRP capability is enabled

Note: Accessible in both peripheral and host modes.

Bit 7 Reserved, must be kept at reset value.

Bit 6 **PHYSEL:** USB 2.0 high-speed ULPI PHY or USB 1.1 full-speed serial transceiver select

0: USB 2.0 high-speed ULPI PHY

1: USB 1.1 full-speed serial transceiver

Bits 5:3 Reserved, must be kept at reset value.

Bits 2:0 **TOCAL:** FS timeout calibration

The number of PHY clocks that the application programs in this field is added to the full-speed interpacket timeout duration in the core to account for any additional delays introduced by the PHY. This can be required, because the delay introduced by the PHY in generating the line state condition can vary from one PHY to another.

The USB standard timeout value for full-speed operation is 16 to 18 (inclusive) bit times. The application must program this field based on the speed of enumeration. The number of bit times added per PHY clock is 0.25 bit times.

Table 213. TRDT values

AHB frequency range (MHz)		TRDT minimum value
Min.	Max	
30	-	0x9

OTG_HS reset register (OTG_HS_GRSTCTL)

Address offset: 0x010

Reset value: 0x8000 0000

The application uses this register to reset various hardware features inside the core.

31	30	29	28	27	26	25	24	23	22	21	20	19	18	17	16	15	14	13	12	11	10	9	8	7	6	5	4	3	2	1	0
AHBIDL	DMAREQ	Reserved																			TXFNUM					TXFFLSH	RXFFLSH	Reserved	FCRST	HSRST	CSRST
r	r																				rw					rs	rs		rs	rs	rs

Bit 31 **AHBIDL:** AHB master idle

Indicates that the AHB master state machine is in the Idle condition.

Note: Accessible in both peripheral and host modes.

Bit 30 **DMAREQ:** DMA request signal

This bit indicates that the DMA request is in progress. Used for debug.

Bits 29:11 Reserved, must be kept at reset value.

Bits 10:6 **TXFNUM:** TxFIFO number

This is the FIFO number that must be flushed using the TxFIFO Flush bit. This field must not be changed until the core clears the TxFIFO Flush bit.

00000:

– Nonperiodic TxFIFO flush in host mode

– Tx FIFO 0 flush in peripheral mode

00001:

– Periodic TxFIFO flush in host mode

– TXFIFO 1 flush in peripheral mode

00010: TXFIFO 2 flush in peripheral mode

...

00101: TXFIFO 15 flush in peripheral mode

10000: Flush all the transmit FIFOs in peripheral or host mode.

Note: Accessible in both peripheral and host modes.

Bit 5 **TXFFLSH:** TxFIFO flush

This bit selectively flushes a single or all transmit FIFOs, but cannot do so if the core is in the midst of a transaction.

The application must write this bit only after checking that the core is neither writing to the TxFIFO nor reading from the TxFIFO. Verify using these registers:

– Read: the NAK effective interrupt ensures the core is not reading from the FIFO

– Write: the AHBIDL bit in OTG_HS_GRSTCTL ensures that the core is not writing anything to the FIFO

Note: Accessible in both peripheral and host modes.

Bit 4 **RXFFLSH:** RxFIFO flush

The application can flush the entire RxFIFO using this bit, but must first ensure that the core is not in the middle of a transaction.

The application must only write to this bit after checking that the core is neither reading from the RxFIFO nor writing to the RxFIFO.

The application must wait until the bit is cleared before performing any other operation. This bit requires 8 clocks (slowest of PHY or AHB clock) to be cleared.

Note: Accessible in both peripheral and host modes.

Bit 3 Reserved, must be kept at reset value.

Bit 2 **FCRST:** Host frame counter reset

The application writes this bit to reset the (micro) frame number counter inside the core. When the (micro) frame counter is reset, the subsequent SOF sent out by the core has a frame number of 0.

Note: Only accessible in host mode.

Bit 1 **HSRST:** HCLK soft reset

The application uses this bit to flush the control logic in the AHB Clock domain. Only AHB Clock Domain pipelines are reset.

FIFOs are not flushed with this bit.

All state machines in the AHB clock domain are reset to the Idle state after terminating the transactions on the AHB, following the protocol.

CSR control bits used by the AHB clock domain state machines are cleared.

To clear this interrupt, status mask bits that control the interrupt status and are generated by the AHB clock domain state machine are cleared.

Because interrupt status bits are not cleared, the application can get the status of any core events that occurred after it set this bit.

This is a self-clearing bit that the core clears after all necessary logic is reset in the core. This can take several clocks, depending on the core's current state.

Note: Accessible in both peripheral and host modes.

Bit 0 **CSRST:** Core soft reset

Resets the HCLK and PCLK domains as follows:

Clears the interrupts and all the CSR register bits except for the following bits:

- RSTPDMODL bit in OTG_HS_PCGCCTL
- GAYEHCLK bit in OTG_HS_PCGCCTL
- PWRCLMP bit in OTG_HS_PCGCCTL
- STPPCLK bit in OTG_HS_PCGCCTL
- FSLSPCS bit in OTG_HS_HCFG
- DSPD bit in OTG_HS_DCFG

All module state machines (except for the AHB slave unit) are reset to the Idle state, and all the transmit FIFOs and the receive FIFO are flushed.

Any transactions on the AHB Master are terminated as soon as possible, after completing the last data phase of an AHB transfer. Any transactions on the USB are terminated immediately.

The application can write to this bit any time it wants to reset the core. This is a self-clearing bit and the core clears this bit after all the necessary logic is reset in the core, which can take several clocks, depending on the current state of the core. Once this bit has been cleared, the software must wait at least 3 PHY clocks before accessing the PHY domain (synchronization delay). The software must also check that bit 31 in this register is set to 1 (AHB Master is Idle) before starting any operation.

Typically, the software reset is used during software development and also when you dynamically change the PHY selection bits in the above listed USB configuration registers. When you change the PHY, the corresponding clock for the PHY is selected and used in the PHY domain. Once a new clock is selected, the PHY domain has to be reset for proper operation.

Note: Accessible in both peripheral and host modes.

OTG_HS core interrupt register (OTG_HS_GINTSTS)

Address offset: 0x014

Reset value: 0x0400 0020

This register interrupts the application for system-level events in the current mode (peripheral mode or host mode).

Some of the bits in this register are valid only in host mode, while others are valid in peripheral mode only. This register also indicates the current mode. To clear the interrupt status bits of the rc_w1 type, the application must write 1 into the bit.

The FIFO status interrupts are read-only; once software reads from or writes to the FIFO while servicing these interrupts, FIFO interrupt conditions are cleared automatically.

The application must clear the OTG_HS_GINTSTS register at initialization before unmasking the interrupt bit to avoid any interrupts generated prior to initialization.

31	30	29	28	27	26	25	24	23	22	21	20	19	18	17	16	15	14	13	12	11	10	9	8	7	6	5	4	3	2	1	0
WKUINT	SRQINT	DISCINT	CIDSCHG	Reserved	PTXFE	HCINT	HPRTINT	Reserved	DATAFSUSP	IPXFR/INCOMPISOOUT	IISOIXFR	OEPINT	IEPINT	Reserved		EOPF	ISOODRP	ENUMDNE	USBRST	USBSUSP	ESUSP	Reserved		GONAKEFF	GINAKEFF	NPTXFE	RXFLVL	SOF	OTGINT	MMIS	CMOD
rc_w1					r	r	r			rc_w1		r	r			rc_w1								r	r	r	r	rc_w1	r	rc_w1	r

Bit 31 **WKUPINT:** Resume/remote wakeup detected interrupt

In peripheral mode, this interrupt is asserted when a resume is detected on the USB. In host mode, this interrupt is asserted when a remote wakeup is detected on the USB.

Note: Accessible in both peripheral and host modes.

Bit 30 **SRQINT:** Session request/new session detected interrupt

In host mode, this interrupt is asserted when a session request is detected from the device. In peripheral mode, this interrupt is asserted when V_{BUS} is in the valid range for a B-device device. Accessible in both peripheral and host modes.

Bit 29 **DISCINT:** Disconnect detected interrupt

Asserted when a device disconnect is detected.

Note: Only accessible in host mode.

Bit 28 **CIDSCHG:** Connector ID status change

The core sets this bit when there is a change in connector ID status.

Note: Accessible in both peripheral and host modes.

Bit 27 Reserved, must be kept at reset value.

Bit 26 **PTXFE:** Periodic TxFIFO empty

Asserted when the periodic transmit FIFO is either half or completely empty and there is space for at least one entry to be written in the periodic request queue. The half or completely empty status is determined by the periodic TxFIFO empty level bit in the Core AHB configuration register (PTXFELVL bit in OTG_HS_GAHBCFG).

Note: Only accessible in host mode.

Bit 25 **HCINT:** Host channels interrupt

The core sets this bit to indicate that an interrupt is pending on one of the channels of the core (in host mode). The application must read the host all channels interrupt (OTG_HS_HAINT) register to determine the exact number of the channel on which the interrupt occurred, and then read the corresponding host channel-x interrupt (OTG_HS_HCINTx) register to determine the exact cause of the interrupt. The application must clear the appropriate status bit in the OTG_HS_HCINTx register to clear this bit.

Note: Only accessible in host mode.

Bit 24 **HPRTINT:** Host port interrupt

The core sets this bit to indicate a change in port status of one of the OTG_HS controller ports in host mode. The application must read the host port control and status (OTG_HS_HPRT) register to determine the exact event that caused this interrupt. The application must clear the appropriate status bit in the host port control and status register to clear this bit.

Note: Only accessible in host mode.

Bits 23 Reserved, must be kept at reset value.

Bit 22 **DATAFSUSP:** Data fetch suspended

This interrupt is valid only in DMA mode. This interrupt indicates that the core has stopped fetching data for IN endpoints due to the unavailability of TxFIFO space or request queue space. This interrupt is used by the application for an endpoint mismatch algorithm. For example, after detecting an endpoint mismatch, the application:

- Sets a global nonperiodic IN NAK handshake
- Disables IN endpoints
- Flushes the FIFO
- Determines the token sequence from the IN token sequence learning queue
- Re-enables the endpoints
- Clears the global nonperiodic IN NAK handshake If the global nonperiodic IN NAK is cleared, the core has not yet fetched data for the IN endpoint, and the IN token is received: the core generates an “IN token received when FIFO empty” interrupt. The OTG then sends a NAK response to the host. To avoid this scenario, the application can check the FetSusp interrupt in OTG_FS_GINTSTS, which ensures that the FIFO is full before clearing a global NAK handshake. Alternatively, the application can mask the “IN token received when FIFO empty” interrupt when clearing a global IN NAK handshake.

Bit 21 **IPXFR:** Incomplete periodic transfer

In host mode, the core sets this interrupt bit when there are incomplete periodic transactions still pending, which are scheduled for the current frame.

Note: Only accessible in host mode.

INCOMPISOOUT: Incomplete isochronous OUT transfer

In peripheral mode, the core sets this interrupt to indicate that there is at least one isochronous OUT endpoint on which the transfer is not completed in the current frame. This interrupt is asserted along with the End of periodic frame interrupt (EOPF) bit in this register.

Note: Only accessible in peripheral mode.

Bit 20 **IISOIXFR:** Incomplete isochronous IN transfer

The core sets this interrupt to indicate that there is at least one isochronous IN endpoint on which the transfer is not completed in the current frame. This interrupt is asserted along with the End of periodic frame interrupt (EOPF) bit in this register.

Note: Only accessible in peripheral mode.

Bit 19 **OEPINT:** OUT endpoint interrupt

The core sets this bit to indicate that an interrupt is pending on one of the OUT endpoints of the core (in peripheral mode). The application must read the device all endpoints interrupt (OTG_HS_DAINT) register to determine the exact number of the OUT endpoint on which the interrupt occurred, and then read the corresponding device OUT Endpoint-x Interrupt (OTG_HS_DOEPINTx) register to determine the exact cause of the interrupt. The application must clear the appropriate status bit in the corresponding OTG_HS_DOEPINTx register to clear this bit.

Note: Only accessible in peripheral mode.

Bit 18 **IEPINT:** IN endpoint interrupt

The core sets this bit to indicate that an interrupt is pending on one of the IN endpoints of the core (in peripheral mode). The application must read the device All Endpoints Interrupt (OTG_HS_DAINT) register to determine the exact number of the IN endpoint on which the interrupt occurred, and then read the corresponding device IN Endpoint-x interrupt (OTG_HS_DIEPINTx) register to determine the exact cause of the interrupt. The application must clear the appropriate status bit in the corresponding OTG_HS_DIEPINTx register to clear this bit.

Note: Only accessible in peripheral mode.

Bits 17:16 Reserved, must be kept at reset value.

Bit 15 **EOPF:** End of periodic frame interrupt

Indicates that the period specified in the periodic frame interval field of the device configuration register (PFIVL bit in OTG_HS_DCFG) has been reached in the current frame.

Note: Only accessible in peripheral mode.

Bit 14 **ISOODRP:** Isochronous OUT packet dropped interrupt

The core sets this bit when it fails to write an isochronous OUT packet into the RxFIFO because the RxFIFO does not have enough space to accommodate a maximum size packet for the isochronous OUT endpoint.

Note: Only accessible in peripheral mode.

Bit 13 **ENUMDNE:** Enumeration done

The core sets this bit to indicate that speed enumeration is complete. The application must read the device Status (OTG_HS_DSTS) register to obtain the enumerated speed.

Note: Only accessible in peripheral mode.

Bit 12 **USBRST:** USB reset

The core sets this bit to indicate that a reset is detected on the USB.

Note: Only accessible in peripheral mode.

Bit 11 **USBSUSP:** USB suspend

The core sets this bit to indicate that a suspend was detected on the USB. The core enters the Suspended state when there is no activity on the data lines for a period of 3 ms.

Note: Only accessible in peripheral mode.

Bit 10 **ESUSP:** Early suspend

The core sets this bit to indicate that an Idle state has been detected on the USB for 3 ms.

Note: Only accessible in peripheral mode.

Bits 9:8 Reserved, must be kept at reset value.

Bit 7 **GONAKEFF:** Global OUT NAK effective

Indicates that the Set global OUT NAK bit in the Device control register (SGONAK bit in OTG_HS_DCTL), set by the application, has taken effect in the core. This bit can be cleared by writing the Clear global OUT NAK bit in the Device control register (CGONAK bit in OTG_HS_DCTL).

Note: Only accessible in peripheral mode.

Bit 6 **GINAKEFF:** Global IN nonperiodic NAK effective

Indicates that the Set global nonperiodic IN NAK bit in the Device control register (SGINAK bit in OTG_HS_DCTL), set by the application, has taken effect in the core. That is, the core has sampled the Global IN NAK bit set by the application. This bit can be cleared by clearing the Clear global nonperiodic IN NAK bit in the Device control register (CGINAK bit in OTG_HS_DCTL).

This interrupt does not necessarily mean that a NAK handshake is sent out on the USB. The STALL bit takes precedence over the NAK bit.

Note: Only accessible in peripheral mode.

Bit 5 **NPTXFE:** Nonperiodic TxFIFO empty

This interrupt is asserted when the nonperiodic TxFIFO is either half or completely empty, and there is space in at least one entry to be written to the nonperiodic transmit request queue. The half or completely empty status is determined by the nonperiodic TxFIFO empty level bit in the OTG_HS_GAHBCFG register (TXFELVL bit in OTG_HS_GAHBCFG).

Note: Only accessible in host mode.

Bit 4 **RXFLVL:** RxFIFO nonempty

Indicates that there is at least one packet pending to be read from the RxFIFO.

Note: Accessible in both host and peripheral modes.

Bit 3 **SOF:** Start of frame

In host mode, the core sets this bit to indicate that an SOF (FS), or Keep-Alive (LS) is transmitted on the USB. The application must write a 1 to this bit to clear the interrupt.

In peripheral mode, in the core sets this bit to indicate that an SOF token has been received on the USB. The application can read the Device Status register to get the current frame number. This interrupt is seen only when the core is operating in FS.

Note: Accessible in both host and peripheral modes.

Bit 2 **OTGINT:** OTG interrupt

The core sets this bit to indicate an OTG protocol event. The application must read the OTG Interrupt Status (OTG_HS_GOTGINT) register to determine the exact event that caused this interrupt. The application must clear the appropriate status bit in the OTG_HS_GOTGINT register to clear this bit.

Note: Accessible in both host and peripheral modes.

Bit 1 **MMIS:** Mode mismatch interrupt

The core sets this bit when the application is trying to access:

A host mode register, when the core is operating in peripheral mode

A peripheral mode register, when the core is operating in host mode

The register access is completed on the AHB with an OKAY response, but is ignored by the core internally and does not affect the operation of the core.

Note: Accessible in both host and peripheral modes.

Bit 0 **CMOD:** Current mode of operation

Indicates the current mode.

0: Peripheral mode

1: Host mode

Note: Accessible in both host and peripheral modes.

OTG_HS interrupt mask register (OTG_HS_GINTMSK)

Address offset: 0x018

Reset value: 0x0000 0000

This register works with the Core interrupt register to interrupt the application. When an interrupt bit is masked, the interrupt associated with that bit is not generated. However, the Core Interrupt (OTG_HS_GINTSTS) register bit corresponding to that interrupt is still set.

31	30	29	28	27	26	25	24	23	22	21	20	19	18	17	16	15	14	13	12	11	10	9	8	7	6	5	4	3	2	1	0
WUIM	SRQIM	DISCINT	CIDSCHGM	Reserved	PTXFEM	HCIM	PRTIM	Reserved	FSUSPM	IPXFRM/IISOOXFRM	IISOIXFRM	OEPINT	IEPINT	Reserved		EOPFM	ISOODRPM	ENUMDNEM	USBRST	USBSUSPM	ESUSPM	Reserved		GONAKEFFM	GINAKEFFM	NPTXFEM	RXFLVLM	SOFM	OTGINT	MMISM	Reserved
rw	rw	rw	rw		rw	rw	rw		rw	rw	rw	rw	rw			rw	rw	rw	rw	rw	rw			rw	rw	rw	rw	rw	rw	rw	

Bit 31 **WUIM:** Resume/remote wakeup detected interrupt mask
0: Masked interrupt
1: Unmasked interrupt
Note: Accessible in both host and peripheral modes.

Bit 30 **SRQIM:** Session request/new session detected interrupt mask
0: Masked interrupt
1: Unmasked interrupt
Note: Accessible in both host and peripheral modes.

Bit 29 **DISCINT:** Disconnect detected interrupt mask
0: Masked interrupt
1: Unmasked interrupt
Note: Accessible in both host and peripheral modes.

Bit 28 **CIDSCHGM:** Connector ID status change mask
0: Masked interrupt
1: Unmasked interrupt
Note: Accessible in both host and peripheral modes.

Bit 27 Reserved, must be kept at reset value.

Bit 26 **PTXFEM:** Periodic TxFIFO empty mask
0: Masked interrupt
1: Unmasked interrupt
Note: Only accessible in host mode.

Bit 25 **HCIM:** Host channels interrupt mask
0: Masked interrupt
1: Unmasked interrupt
Note: Only accessible in host mode.

Bit 24 **PRTIM:** Host port interrupt mask
0: Masked interrupt
1: Unmasked interrupt
Note: Only accessible in host mode.

Bit 23 Reserved, must be kept at reset value.

Bit 22 **FSUSPM:** Data fetch suspended mask
0: Masked interrupt
1: Unmasked interrupt
Note: Only accessible in peripheral mode.

Bit 21 **IPXFRM:** Incomplete periodic transfer mask
0: Masked interrupt
1: Unmasked interrupt
Note: Only accessible in host mode.

IISOOXFRM: Incomplete isochronous OUT transfer mask
0: Masked interrupt
1: Unmasked interrupt
Note: Only accessible in peripheral mode.

Bit 20 **IISOIXFRM:** Incomplete isochronous IN transfer mask
0: Masked interrupt
1: Unmasked interrupt
Note: Only accessible in peripheral mode.

Bit 19 **OEPINT:** OUT endpoints interrupt mask
0: Masked interrupt
1: Unmasked interrupt
Note: Only accessible in peripheral mode.

Bit 18 **IEPINT:** IN endpoints interrupt mask
0: Masked interrupt
1: Unmasked interrupt
Note: Only accessible in peripheral mode.

Bits 17:16 Reserved, must be kept at reset value.

Bit 15 **EOPFM:** End of periodic frame interrupt mask
0: Masked interrupt
1: Unmasked interrupt
Note: Only accessible in peripheral mode.

Bit 14 **ISOODRPM:** Isochronous OUT packet dropped interrupt mask
0: Masked interrupt
1: Unmasked interrupt
Note: Only accessible in peripheral mode.

Bit 13 **ENUMDNEM:** Enumeration done mask
0: Masked interrupt
1: Unmasked interrupt
Note: Only accessible in peripheral mode.

Bit 12 **USBRST:** USB reset mask
0: Masked interrupt
1: Unmasked interrupt
Note: Only accessible in peripheral mode.

Bit 11 **USBSUSPM:** USB suspend mask
0: Masked interrupt
1: Unmasked interrupt
Note: Only accessible in peripheral mode.

Bit 10 **ESUSPM:** Early suspend mask
0: Masked interrupt
1: Unmasked interrupt
Note: Only accessible in peripheral mode.

Bits 9:8 Reserved, must be kept at reset value.

Bit 7 **GONAKEFFM:** Global OUT NAK effective mask
0: Masked interrupt
1: Unmasked interrupt
Note: Only accessible in peripheral mode.

Bit 6 **GINAKEFFM:** Global nonperiodic IN NAK effective mask
0: Masked interrupt
1: Unmasked interrupt
Note: Only accessible in peripheral mode.

Bit 5 **NPTXFEM:** Nonperiodic TxFIFO empty mask
0: Masked interrupt
1: Unmasked interrupt
Note: Accessible in both peripheral and host modes.

Bit 4 **RXFLVLM:** Receive FIFO nonempty mask
0: Masked interrupt
1: Unmasked interrupt
Note: Accessible in both peripheral and host modes.

Bit 3 **SOFM:** Start of frame mask
0: Masked interrupt
1: Unmasked interrupt
Note: Accessible in both peripheral and host modes.

Bit 2 **OTGINT:** OTG interrupt mask
0: Masked interrupt
1: Unmasked interrupt
Note: Accessible in both peripheral and host modes.

Bit 1 **MMISM:** Mode mismatch interrupt mask
0: Masked interrupt
1: Unmasked interrupt
Note: Accessible in both peripheral and host modes.

Bit 0 Reserved, must be kept at reset value.

OTG_HS Receive status debug read/OTG status read and pop registers (OTG_HS_GRXSTSR/OTG_HS_GRXSTSP)

Address offset for Read: 0x01C

Address offset for Pop: 0x020

Reset value: 0x0000 0000

A read to the Receive status debug read register returns the contents of the top of the Receive FIFO. A read to the Receive status read and pop register additionally pops the top data entry out of the RxFIFO.

The receive status contents must be interpreted differently in host and peripheral modes. The core ignores the receive status pop/read when the receive FIFO is empty and returns a value of 0x0000 0000. The application must only pop the Receive Status FIFO when the Receive FIFO nonempty bit of the Core interrupt register (RXFLVL bit in OTG_HS_GINTSTS) is asserted.

Host mode:

31	30	29	28	27	26	25	24	23	22	21	20	19	18	17	16	15	14	13	12	11	10	9	8	7	6	5	4	3	2	1	0
Reserved											PKTSTS				DPID		BCNT											CHNUM			
											r				r		r											r			

Bits 31:21 Reserved, must be kept at reset value.

Bits 20:17 **PKTSTS:** Packet status

Indicates the status of the received packet
0010: IN data packet received
0011: IN transfer completed (triggers an interrupt)
0101: Data toggle error (triggers an interrupt)
0111: Channel halted (triggers an interrupt)
Others: Reserved

Bits 16:15 **DPID:** Data PID

Indicates the Data PID of the received packet
00: DATA0
10: DATA1
01: DATA2
11: MDATA

Bits 14:4 **BCNT:** Byte count

Indicates the byte count of the received IN data packet.

Bits 3:0 **CHNUM:** Channel number

Indicates the channel number to which the current received packet belongs.

Peripheral mode:

31 30 29 28 27 26 25	24 23 22 21	20 19 18 17	16	15 14 13 12 11 10 9 8 7 6 5 4	3 2 1 0
Reserved	FRMNUM	PKTSTS	DPID	BCNT	EPNUM
	r	r	r	r	r

Bits 31:25 Reserved, must be kept at reset value.

Bits 24:21 **FRMNUM:** Frame number

This is the least significant 4 bits of the frame number in which the packet is received on the USB. This field is supported only when isochronous OUT endpoints are supported.

Bits 20:17 **PKTSTS:** Packet status

Indicates the status of the received packet
0001: Global OUT NAK (triggers an interrupt)
0010: OUT data packet received
0011: OUT transfer completed (triggers an interrupt)
0100: SETUP transaction completed (triggers an interrupt)
0110: SETUP data packet received
Others: Reserved

Bits 16:15 **DPID:** Data PID

Indicates the Data PID of the received OUT data packet
00: DATA0
10: DATA1
01: DATA2
11: MDATA

Bits 14:4 **BCNT:** Byte count

Indicates the byte count of the received data packet.

Bits 3:0 **EPNUM:** Endpoint number

Indicates the endpoint number to which the current received packet belongs.

OTG_HS Receive FIFO size register (OTG_HS_GRXFSIZ)

Address offset: 0x024

Reset value: 0x0000 0400

The application can program the RAM size that must be allocated to the RxFIFO.

31 30 29 28 27 26 25 24 23 22 21 20 19 18 17 16	15 14 13 12 11 10 9 8 7 6 5 4 3 2 1 0
Reserved	RXFD
	rw

Bits 31:16 Reserved, must be kept at reset value.

Bits 15:0 **RXFD:** RxFIFO depth

This value is in terms of 32-bit words.
Minimum value is 16
Maximum value is 1024
The power-on reset value of this register is specified as the largest Rx data FIFO depth.

OTG_HS nonperiodic transmit FIFO size/Endpoint 0 transmit FIFO size register (OTG_HS_GNPTXFSIZ/OTG_HS_TX0FSIZ)

Address offset: 0x028

Reset value: 0x0000 0200

Host mode:

31	30	29	28	27	26	25	24	23	22	21	20	19	18	17	16	15	14	13	12	11	10	9	8	7	6	5	4	3	2	1	0
NPTXFD																NPTXFSA															
rw																rw															

Bits 31:16 **NPTXFD:** Nonperiodic TxFIFO depth
This value is in terms of 32-bit words.
Minimum value is 16
Maximum value is 1024

Bits 15:0 **NPTXFSA:** Nonperiodic transmit RAM start address
This field contains the memory start address for nonperiodic transmit FIFO RAM.

Peripheral mode:

31	30	29	28	27	26	25	24	23	22	21	20	19	18	17	16	15	14	13	12	11	10	9	8	7	6	5	4	3	2	1	0
TX0FD																TX0FSA															
r/rw																r/rw															

Bits 31:16 **T0XFD:** Endpoint 0 TxFIFO depth
This value is in terms of 32-bit words.
Minimum value is 16
Maximum value is 256

Bits 15:0 **TX0FSA:** Endpoint 0 transmit RAM start address
This field contains the memory start address for Endpoint 0 transmit FIFO RAM.

OTG_HS nonperiodic transmit FIFO/queue status register (OTG_HS_GNPTXSTS)

Address offset: 0x02C

Reset value: 0x0008 0400

Note: In peripheral mode, this register is not valid.

This read-only register contains the free space information for the nonperiodic TxFIFO and the nonperiodic transmit request queue.

31	30	29	28	27	26	25	24	23	22	21	20	19	18	17	16	15	14	13	12	11	10	9	8	7	6	5	4	3	2	1	0
Reserved	NPTXQTOP							NPTQXSAV								NPTXFSAV															
	r							r								r															

Bit 31 Reserved, must be kept at reset value.

Bits 30:24 **NPTXQTOP:** Top of the nonperiodic transmit request queue

Entry in the nonperiodic Tx request queue that is currently being processed by the MAC.
Bits [30:27]: Channel/endpoint number
Bits [26:25]:
- 00: IN/OUT token
- 01: Zero-length transmit packet (device IN/host OUT)
- 10: PING/CSPLIT token
- 11: Channel halt command

Bit [24]: Terminate (last entry for selected channel/endpoint)

Bits 23:16 **NPTQXSAV:** Nonperiodic transmit request queue space available

Indicates the amount of free space available in the nonperiodic transmit request queue. This queue holds both IN and OUT requests in host mode. Peripheral mode has only IN requests.
00: Nonperiodic transmit request queue is full
01: dx1 location available
10: dx2 locations available
bxn: dx*n* locations available (0 ≤ *n* ≤ dx8)
Others: Reserved

Bits 15:0 **NPTXFSAV:** Nonperiodic TxFIFO space available

Indicates the amount of free space available in the nonperiodic TxFIFO.
Values are in terms of 32-bit words.
00: Nonperiodic TxFIFO is full
01: dx1 word available
10: dx2 words available
0xn: dx*n* words available (where 0 ≤ *n* ≤ dx1024)
Others: Reserved

OTG_HS general core configuration register (OTG_HS_GCCFG)

Address offset: 0x038

Reset value: 0x0000 XXXX

31	30	29	28	27	26	25	24	23	22	21	20	19	18	17	16	15	14	13	12	11	10	9	8	7	6	5	4	3	2	1	0
Reserved										NOVBUSSENS	SOFOUTEN	VBUSBSEN	VBUSASEN	I2CPADEN	.PWRDWN	Reserved															
										rw	rw	rw	rw	rw	rw																

Bits 31:22 Reserved, must be kept at reset value.

Bit 21 **NOVBUSSENS**: V_{BUS} sensing disable option

When this bit is set, V_{BUS} is considered internally to be always at V_{BUS} valid level (5 V). This option removes the need for a dedicated V_{BUS} pad, and leave this pad free to be used for other purposes such as a shared functionality. V_{BUS} connection can be remapped on another general purpose input pad and monitored by software.

This option is only suitable for host-only or device-only applications.

0: V_{BUS} sensing available by hardware

1: V_{BUS} sensing not available by hardware.

Bit 20 **SOFOUTEN:** SOF output enable

0: SOF pulse not available on PAD

1: SOF pulse available on PAD

Bit 19 **VBUSBSEN:** Enable the V_{BUS} sensing “B” device

0: V_{BUS} sensing “B” disabled

1: V_{BUS} sensing “B” enabled

Bit 18 **VBUSASEN:** Enable the V_{BUS} sensing “A” device

0: V_{BUS} sensing “A” disabled

1: V_{BUS} sensing “A” enabled

Bit 17 **I2CPADEN**: Enable I^2C bus connection for the external I^2C PHY interface.

0: I^2C bus disabled

1: I^2C bus enabled

Bit 16 **PWRDWN:** Power down

Used to activate the transceiver in transmission/reception

0: Power down active

1: Power down deactivated (“Transceiver active”)

Bits 15:0 Reserved, must be kept at reset value.

OTG_HS core ID register (OTG_HS_CID)

Address offset: 0x03C

Reset value:0x0000 1100

This is a register containing the Product ID as reset value.

31	30	29	28	27	26	25	24	23	22	21	20	19	18	17	16	15	14	13	12	11	10	9	8	7	6	5	4	3	2	1	0
PRODUCT_ID																															
rw	rw	rw	rw	rw	rw	rw	rw	rw	rw	rw	rw	rw	rw	rw	rw	rw	rw	rw	rw	rw	rw	rw	rw	rw	rw	rw	rw	rw	rw	rw	rw

Bits 31:0 **PRODUCT_ID:** Product ID field

Application-programmable ID field.

OTG_HS Host periodic transmit FIFO size register (OTG_HS_HPTXFSIZ)

Address offset: 0x100

Reset value: 0x0200 0800

31	30	29	28	27	26	25	24	23	22	21	20	19	18	17	16	15	14	13	12	11	10	9	8	7	6	5	4	3	2	1	0
PTXFD																PTXSA															
r	r	r	r	r	r	r	r	r	r	r	r	r	r	r	r	r	r	r	r	r	r	r	r	r	r	r	r	r	r	r	r

Bits 31:16 **PTXFD:** Host periodic TxFIFO depth
This value is in terms of 32-bit words.
Minimum value is 16
Maximum value is 512

Bits 15:0 **PTXSA:** Host periodic TxFIFO start address
The power-on reset value of this register is the sum of the largest Rx data FIFO depth and largest nonperiodic Tx data FIFO depth.

OTG_HS device IN endpoint transmit FIFO size register (OTG_HS_DIEPTXFx) (x = 1..5, where x is the FIFO_number)

Address offset: 0x104 + 0x04 * (x - 1)

Reset value: 0x02000400

31	30	29	28	27	26	25	24	23	22	21	20	19	18	17	16	15	14	13	12	11	10	9	8	7	6	5	4	3	2	1	0
INEPTXFD																INEPTXSA															
r	r	r	r	r	r	r	r	r	r	r	r	r	r	r	r	r	r	r	r	r	r	r	r	r	r	r	r	r	r	r	r

Bits 31:16 **INEPTXFD:** IN endpoint TxFIFO depth
This value is in terms of 32-bit words.
Minimum value is 16
Maximum value is 512
The power-on reset value of this register is specified as the largest IN endpoint FIFO number depth.

Bits 15:0 **INEPTXSA:** IN endpoint FIFOx transmit RAM start address
This field contains the memory start address for IN endpoint transmit FIFOx. The address must be aligned with a 32-bit memory location.

35.12.3 Host-mode registers

Bit values in the register descriptions are expressed in binary unless otherwise specified.

Host-mode registers affect the operation of the core in the host mode. Host mode registers must not be accessed in peripheral mode, as the results are undefined. Host mode registers can be categorized as follows:

OTG_HS host configuration register (OTG_HS_HCFG)

Address offset: 0x400

Reset value: 0x0000 0000

This register configures the core after power-on. Do not change to this register after initializing the host.

31	30	29	28	27	26	25	24	23	22	21	20	19	18	17	16	15	14	13	12	11	10	9	8	7	6	5	4	3	2	1	0
Reserved																													FSLSS	FSLSPCS	
																													r	rw	rw

Bits 31:3 Reserved, must be kept at reset value.

Bit 2 **FSLSS:** FS- and LS-only support

The application uses this bit to control the core's enumeration speed. Using this bit, the application can make the core enumerate as an FS host, even if the connected device supports HS traffic. Do not make changes to this field after initial programming.

0: HS/FS/LS, based on the maximum speed supported by the connected device

1: FS/LS-only, even if the connected device can support HS (read-only)

Bits 1:0 **FSLSPCS:** FS/LS PHY clock select

When the core is in FS host mode:

01: PHY clock is running at 48 MHz

Others: Reserved

When the core is in LS host mode:

00: Reserved

01: PHY clock is running at 48 MHz.

10: Select 6 MHz PHY clock frequency

11: Reserved

Note: The FSLSPCS bit must be set on a connection event according to the speed of the connected device. A software reset must be performed after changing this bit.

OTG_HS Host frame interval register (OTG_HS_HFIR)

Address offset: 0x404

Reset value: 0x0000 EA60

This register stores the frame interval information for the current speed to which the OTG_HS controller has enumerated.

31	30	29	28	27	26	25	24	23	22	21	20	19	18	17	16	15	14	13	12	11	10	9	8	7	6	5	4	3	2	1	0
Reserved																FRIVL															
																rw	rw	rw	rw	rw	rw	rw	rw	rw	rw	rw	rw	rw	rw	rw	rw

Bits 31:16 Reserved, must be kept at reset value.

Bits 15:0 **FRIVL:** Frame interval

The value that the application programs to this field specifies the interval between two consecutive SOFs (FS), micro-SOFs (HS) or Keep-Alive tokens (LS). This field contains the number of PHY clocks that constitute the required frame interval. The application can write a value to this register only after the Port enable bit of the host port control and status register (PENA bit in OTG_HS_HPRT) has been set. If no value is programmed, the core calculates the value based on the PHY clock specified in the FS/LS PHY Clock Select field of the Host configuration register (FSLSPCS in OTG_HS_HCFG):

frame duration × PHY clock frequency

– Frame interval = 1 ms × (FRIVL - 1)

Note: The FRIVL bit can be modified whenever the application needs to change the Frame interval time.

OTG_HS host frame number/frame time remaining register (OTG_HS_HFNUM)

Address offset: 0x408

Reset value: 0x0000 3FFF

This register indicates the current frame number. It also indicates the time remaining (in terms of the number of PHY clocks) in the current frame.

31	30	29	28	27	26	25	24	23	22	21	20	19	18	17	16	15	14	13	12	11	10	9	8	7	6	5	4	3	2	1	0
FTREM																FRNUM															
r	r	r	r	r	r	r	r	r	r	r	r	r	r	r	r	r	r	r	r	r	r	r	r	r	r	r	r	r	r	r	r

Bits 31:16 **FTREM:** Frame time remaining

Indicates the amount of time remaining in the current frame, in terms of PHY clocks. This field decrements on each PHY clock. When it reaches zero, this field is reloaded with the value in the Frame interval register and a new SOF is transmitted on the USB.

Bits 15:0 **FRNUM:** Frame number

This field increments when a new SOF is transmitted on the USB, and is cleared to 0 when it reaches 0x3FFF.

OTG_HS_Host periodic transmit FIFO/queue status register (OTG_HS_HPTXSTS)

Address offset: 0x410

Reset value: 0x0008 0100

This read-only register contains the free space information for the periodic TxFIFO and the periodic transmit request queue.

31	30	29	28	27	26	25	24	23	22	21	20	19	18	17	16	15	14	13	12	11	10	9	8	7	6	5	4	3	2	1	0
PTXQTOP								PTXQSAV								PTXFSAVL															
r	r	r	r	r	r	r	r	r	r	r	r	r	r	r	r	r	r	r	r	r	r	r	r	r	r	r	r	r	r	r	r

Bits 31:24 **PTXQTOP:** Top of the periodic transmit request queue

This indicates the entry in the periodic Tx request queue that is currently being processed by the MAC.

This register is used for debugging.

Bit [31]: Odd/Even frame

- 0: send in even (micro) frame
- 1: send in odd (micro) frame

Bits [30:27]: Channel/endpoint number

Bits [26:25]: Type

- 00: IN/OUT
- 01: Zero-length packet
- 11: Disable channel command

Bit [24]: Terminate (last entry for the selected channel/endpoint)

Bits 23:16 **PTXQSAV:** Periodic transmit request queue space available

Indicates the number of free locations available to be written in the periodic transmit request queue. This queue holds both IN and OUT requests.

00: Periodic transmit request queue is full

01: dx1 location available

10: dx2 locations available

bxn: dxn locations available (0 ≤ *dxn* ≤ PTXFD)

Others: Reserved

Bits 15:0 **PTXFSAVL:** Periodic transmit data FIFO space available

Indicates the number of free locations available to be written to in the periodic TxFIFO.

Values are in terms of 32-bit words

0000: Periodic TxFIFO is full

0001: dx1 word available

0010: dx2 words available

bxn: dxn words available (where 0 ≤ *dxn* ≤ dx512)

Others: Reserved

OTG_HS Host all channels interrupt register (OTG_HS_HAINT)

Address offset: 0x414

Reset value: 0x0000 000

When a significant event occurs on a channel, the host all channels interrupt register interrupts the application using the host channels interrupt bit of the Core interrupt register (HCINT bit in OTG_HS_GINTSTS). This is shown in *Figure 414*. There is one interrupt bit per channel, up to a maximum of 16 bits. Bits in this register are set and cleared when the application sets and clears bits in the corresponding host channel-x interrupt register.

31	30	29	28	27	26	25	24	23	22	21	20	19	18	17	16	15	14	13	12	11	10	9	8	7	6	5	4	3	2	1	0
Reserved																HAINT															
																r	r	r	r	r	r	r	r	r	r	r	r	r	r	r	r

Bits 31:16 Reserved, must be kept at reset value.

Bits 15:0 **HAINT:** Channel interrupts
One bit per channel: Bit 0 for Channel 0, bit 15 for Channel 15

OTG_HS host all channels interrupt mask register (OTG_HS_HAINTMSK)

Address offset: 0x418

Reset value: 0x0000 0000

The host all channel interrupt mask register works with the host all channel interrupt register to interrupt the application when an event occurs on a channel. There is one interrupt mask bit per channel, up to a maximum of 16 bits.

31	30	29	28	27	26	25	24	23	22	21	20	19	18	17	16	15	14	13	12	11	10	9	8	7	6	5	4	3	2	1	0
Reserved																HAINTM															
																rw	rw	rw	rw	rw	rw	rw	rw	rw	rw	rw	rw	rw	rw	rw	rw

Bits 31:16 Reserved, must be kept at reset value.

Bits 15:0 **HAINTM:** Channel interrupt mask
0: Masked interrupt
1: Unmasked interrupt
One bit per channel: Bit 0 for channel 0, bit 15 for channel 15

OTG_HS host port control and status register (OTG_HS_HPRT)

Address offset: 0x440

Reset value: 0x0000 0000

This register is available only in host mode. Currently, the OTG host supports only one port.

A single register holds USB port-related information such as USB reset, enable, suspend, resume, connect status, and test mode for each port. It is shown in *Figure 414*. The rc_w1 bits in this register can trigger an interrupt to the application through the host port interrupt bit of the core interrupt register (HPRTINT bit in OTG_HS_GINTSTS). On a Port Interrupt, the application must read this register and clear the bit that caused the interrupt. For the rc_w1 bits, the application must write a 1 to the bit to clear the interrupt.

31	30	29	28	27	26	25	24	23	22	21	20	19	18	17	16	15	14	13	12	11	10	9	8	7	6	5	4	3	2	1	0
Reserved													PSPD		PTCTL				PPWR	PLSTS		Reserved	PRST	PSUSP	PRES	POCCHNG	POCA	PENCHNG	PENA	PCDET	PCSTS
													r	r	rw	rw	rw	rw	rw	r	r		rw	rs	rw	rc_w1	r	rc_w1	rc_w0	rc_w1	r

Bits 31:19 Reserved, must be kept at reset value.

Bits 18:17 **PSPD:** Port speed

Indicates the speed of the device attached to this port.
00: High speed
01: Full speed
10: Low speed
11: Reserved

Bits 16:13 **PTCTL:** Port test control

The application writes a nonzero value to this field to put the port into a Test mode, and the corresponding pattern is signaled on the port.
0000: Test mode disabled
0001: Test_J mode
0010: Test_K mode
0011: Test_SE0_NAK mode
0100: Test_Packet mode
0101: Test_Force_Enable
Others: Reserved

Bit 12 **PPWR:** Port power

The application uses this field to control power to this port, and the core clears this bit on an overcurrent condition.
0: Power off
1: Power on

Bits 11:10 **PLSTS:** Port line status

Indicates the current logic level USB data lines
Bit [10]: Logic level of OTG_HS_FS_DP
Bit [11]: Logic level of OTG_HS_FS_DM

Bit 9 Reserved, must be kept at reset value.

Bit 8 **PRST:** Port reset

When the application sets this bit, a reset sequence is started on this port. The application must time the reset period and clear this bit after the reset sequence is complete.

0: Port not in reset

1: Port in reset

The application must leave this bit set for a minimum duration of at least 10 ms to start a reset on the port. The application can leave it set for another 10 ms in addition to the required minimum duration, before clearing the bit, even though there is no maximum limit set by the USB standard.

High speed: 50 ms

Full speed/Low speed: 10 ms

Bit 7 **PSUSP:** Port suspend

The application sets this bit to put this port in Suspend mode. The core only stops sending SOFs when this is set. To stop the PHY clock, the application must set the Port clock stop bit, which asserts the suspend input pin of the PHY.

The read value of this bit reflects the current suspend status of the port. This bit is cleared by the core after a remote wakeup signal is detected or the application sets the Port reset bit or Port resume bit in this register or the Resume/remote wakeup detected interrupt bit or Disconnect detected interrupt bit in the Core interrupt register (WKUINT or DISCINT in OTG_HS_GINTSTS, respectively).

0: Port not in Suspend mode

1: Port in Suspend mode

Bit 6 **PRES:** Port resume

The application sets this bit to drive resume signaling on the port. The core continues to drive the resume signal until the application clears this bit.

If the core detects a USB remote wakeup sequence, as indicated by the Port resume/remote wakeup detected interrupt bit of the Core interrupt register (WKUINT bit in OTG_HS_GINTSTS), the core starts driving resume signaling without application intervention and clears this bit when it detects a disconnect condition. The read value of this bit indicates whether the core is currently driving resume signaling.

0: No resume driven

1: Resume driven

Bit 5 **POCCHNG:** Port overcurrent change

The core sets this bit when the status of the Port overcurrent active bit (bit 4) in this register changes.

Bit 4 **POCA:** Port overcurrent active

Indicates the overcurrent condition of the port.

0: No overcurrent condition

1: Overcurrent condition

Bit 3 **PENCHNG:** Port enable/disable change

The core sets this bit when the status of the Port enable bit [2] in this register changes.

Bit 2 **PENA:** Port enable

A port is enabled only by the core after a reset sequence, and is disabled by an overcurrent condition, a disconnect condition, or by the application clearing this bit. The application cannot set this bit by a register write. It can only clear it to disable the port. This bit does not trigger any interrupt to the application.

0: Port disabled

1: Port enabled

Bit 1 **PCDET:** Port connect detected

The core sets this bit when a device connection is detected to trigger an interrupt to the application using the host port interrupt bit in the Core interrupt register (HPRTINT bit in OTG_HS_GINTSTS). The application must write a 1 to this bit to clear the interrupt.

Bit 0 **PCSTS:** Port connect status

0: No device is attached to the port

1: A device is attached to the port

OTG_HS host channel-x characteristics register (OTG_HS_HCCHARx) (x = 0..11, where x = Channel_number)

Address offset: 0x500 + 0x20 * x

Reset value: 0x0000 0000

31	30	29	28	27	26	25	24	23	22	21	20	19	18	17	16	15	14	13	12	11	10	9	8	7	6	5	4	3	2	1	0
CHENA	CHDIS	ODDFRM	DAD							MC		EPTYP		LSDEV	Reserved	EPDIR	EPNUM				MPSIZ										
rs	rs	rw	rw	rw	rw	rw	rw	rw	rw	rw	rw	rw	rw	rw		rw	rw	rw	rw	rw	rw	rw	rw	rw	rw	rw	rw	rw	rw	rw	rw

Bit 31 **CHENA:** Channel enable

This field is set by the application and cleared by the OTG host.

0: Channel disabled

1: Channel enabled

Bit 30 **CHDIS:** Channel disable

The application sets this bit to stop transmitting/receiving data on a channel, even before the transfer for that channel is complete. The application must wait for the Channel disabled interrupt before treating the channel as disabled.

Bit 29 **ODDFRM:** Odd frame

This field is set (reset) by the application to indicate that the OTG host must perform a transfer in an odd frame. This field is applicable for only periodic (isochronous and interrupt) transactions.

0: Even (micro) frame

1: Odd (micro) frame

Bits 28:22 **DAD:** Device address

This field selects the specific device serving as the data source or sink.

Bits 21:20 **MC:** Multi Count (MC) / Error Count (EC)

– When the split enable bit (SPLITEN) in the host channel-x split control register (OTG_HS_HCSPLTx) is reset (0), this field indicates to the host the number of transactions that must be executed per micro-frame for this periodic endpoint. For nonperiodic transfers, this field specifies the number of packets to be fetched for this channel before the internal DMA engine changes arbitration.

  00: Reserved This field yields undefined results
  01: 1 transaction
  b10: 2 transactions to be issued for this endpoint per micro-frame
  11: 3 transactions to be issued for this endpoint per micro-frame.

– When the SPLITEN bit is set (1) in OTG_HS_HCSPLTx, this field indicates the number of immediate retries to be performed for a periodic split transaction on transaction errors. This field must be set to at least 01.

Bits 19:18 **EPTYP:** Endpoint type

Indicates the transfer type selected.
00: Control
01: Isochronous
10: Bulk
11: Interrupt

Bit 17 **LSDEV:** Low-speed device

This field is set by the application to indicate that this channel is communicating to a low-speed device.

Bit 16 Reserved, must be kept at reset value.

Bit 15 **EPDIR:** Endpoint direction

Indicates whether the transaction is IN or OUT.
0: OUT
1: IN

Bits 14:11 **EPNUM:** Endpoint number

Indicates the endpoint number on the device serving as the data source or sink.

Bits 10:0 **MPSIZ:** Maximum packet size

Indicates the maximum packet size of the associated endpoint.

OTG_HS host channel-x split control register (OTG_HS_HCSPLTx) (x = 0..11, where x = Channel_number)

Address offset: 0x504 + 0x20 * x

Reset value: 0x0000 0000

31	30	29	28	27	26	25	24	23	22	21	20	19	18	17	16	15	14	13	12	11	10	9	8	7	6	5	4	3	2	1	0
SPLITEN	Reserved														COMPLSPLT	XACTPOS		HUBADDR							PRTADDR						
rw															rw	rw	rw	rw	rw	rw	rw	rw	rw	rw	rw	rw	rw	rw	rw	rw	rw

Bit 31 **SPLITEN:** Split enable

The application sets this bit to indicate that this channel is enabled to perform split transactions.

Bits 30:17 Reserved, must be kept at reset value.

Bit 16 **COMPLSPLT:** Do complete split

The application sets this bit to request the OTG host to perform a complete split transaction.

Bits 15:14 **XACTPOS:** Transaction position

This field is used to determine whether to send all, first, middle, or last payloads with each OUT transaction.

11: All. This is the entire data payload of this transaction (which is less than or equal to 188 bytes)

10: Begin. This is the first data payload of this transaction (which is larger than 188 bytes)

00: Mid. This is the middle payload of this transaction (which is larger than 188 bytes)

01: End. This is the last payload of this transaction (which is larger than 188 bytes)

Bits 13:7 **HUBADDR:** Hub address

This field holds the device address of the transaction translator's hub.

Bits 6:0 **PRTADDR:** Port address

This field is the port number of the recipient transaction translator.

OTG_HS host channel-x interrupt register (OTG_HS_HCINTx) (x = 0..11, where x = Channel_number)

Address offset: 0x508 + 0x20 * x

Reset value: 0x0000 0000

This register indicates the status of a channel with respect to USB- and AHB-related events. It is shown in *Figure 414*. The application must read this register when the host channels interrupt bit in the Core interrupt register (HCINT bit in OTG_HS_GINTSTS) is set. Before the application can read this register, it must first read the host all channels interrupt (OTG_HS_HAINT) register to get the exact channel number for the host channel-x interrupt register. The application must clear the appropriate bit in this register to clear the corresponding bits in the OTG_HS_HAINT and OTG_HS_GINTSTS registers.

31	30	29	28	27	26	25	24	23	22	21	20	19	18	17	16	15	14	13	12	11	10	9	8	7	6	5	4	3	2	1	0
Reserved																					DTERR	FRMOR	BBERR	TXERR	NYET	ACK	NAK	STALL	AHBERR	CHH	XFRC
																					rc_w1	rc_w1	rc_w1	rc_w1	rc_w1	rc_w1	rc_w1	rc_w1	rc_w1	rc_w1	rc_w1

Bits 31:11 Reserved, must be kept at reset value.

Bit 10 **DTERR:** Data toggle error

Bit 9 **FRMOR:** Frame overrun

Bit 8 **BBERR:** Babble error

Bit 7 **TXERR:** Transaction error

Indicates one of the following errors occurred on the USB.

CRC check failure
Timeout
Bit stuff error
False EOP

Bit 6 **NYET:** Response received interrupt

Bit 5 **ACK:** ACK response received/transmitted interrupt

Bit 4 **NAK:** NAK response received interrupt

Bit 3 **STALL:** STALL response received interrupt

Bit 2 **AHBERR**: AHB error

This error is generated only in Internal DMA mode when an AHB error occurs during an AHB read/write operation. The application can read the corresponding DMA channel address register to get the error address.

Bit 1 **CHH:** Channel halted

Indicates the transfer completed abnormally either because of any USB transaction error or in response to disable request by the application.

Bit 0 **XFRC:** Transfer completed

Transfer completed normally without any errors.

OTG_HS host channel-x interrupt mask register (OTG_HS_HCINTMSKx) (x = 0..11, where x = Channel_number)

Address offset: 0x50C + 0x20 * x

Reset value: 0x0000 0000

This register reflects the mask for each channel status described in the previous section.

31	30	29	28	27	26	25	24	23	22	21	20	19	18	17	16	15	14	13	12	11	10	9	8	7	6	5	4	3	2	1	0
Reserved																					DTERRM	FRMORM	BBERRM	TXERRM	NYET	ACKM	NAKM	STALLM	AHBERRM	CHHM	XFRCM
																					rw	rw	rw	rw	rw	rw	rw	rw	rw	rw	rw

Bits 31:11 Reserved, must be kept at reset value.

Bit 10 **DTERRM:** Data toggle error mask
0: Masked interrupt
1: Unmasked interrupt

Bit 9 **FRMORM:** Frame overrun mask
0: Masked interrupt
1: Unmasked interrupt

Bit 8 **BBERRM:** Babble error mask
0: Masked interrupt
1: Unmasked interrupt

Bit 7 **TXERRM:** Transaction error mask
0: Masked interrupt
1: Unmasked interrupt

Bit 6 **NYET:** response received interrupt mask
0: Masked interrupt
1: Unmasked interrupt

Bit 5 **ACKM:** ACK response received/transmitted interrupt mask
0: Masked interrupt
1: Unmasked interrupt

Bit 4 **NAKM:** NAK response received interrupt mask
0: Masked interrupt
1: Unmasked interrupt

Bit 3 **STALLM:** STALL response received interrupt mask
0: Masked interrupt
1: Unmasked interrupt

Bit 2 **AHBERRM:** AHB error mask
0: Masked interrupt
1: Unmasked interrupt

Bit 1 **CHHM:** Channel halted mask
0: Masked interrupt
1: Unmasked interrupt

Bit 0 **XFRCM:** Transfer completed mask
0: Masked interrupt
1: Unmasked interrupt

OTG_HS host channel-x transfer size register (OTG_HS_HCTSIZx) (x = 0..11, where x = Channel_number)

Address offset: 0x510 + 0x20 * x

Reset value: 0x0000 0000

31	30	29	28	27	26	25	24	23	22	21	20	19	18	17	16	15	14	13	12	11	10	9	8	7	6	5	4	3	2	1	0
DOPING	DPID		PKTCNT										XFRSIZ																		
rw	rw	rw	rw	rw	rw	rw	rw	rw	rw	rw	rw	rw	rw	rw	rw	rw	rw	rw	rw	rw	rw	rw	rw	rw	rw	rw	rw	rw	rw	rw	rw

Bit 31 **DOPING:** Do ping
This bit is used only for OUT transfers. Setting this field to 1 directs the host to do PING protocol.
Note: Do not set this bit for IN transfers. If this bit is set for IN transfers it disables the channel.

Bits 30:29 **DPID:** Data PID
The application programs this field with the type of PID to use for the initial transaction. The host maintains this field for the rest of the transfer.
00: DATA0
01: DATA2
10: DATA1
11: MDATA (noncontrol)/SETUP (control)

Bits 28:19 **PKTCNT:** Packet count
This field is programmed by the application with the expected number of packets to be transmitted (OUT) or received (IN).
The host decrements this count on every successful transmission or reception of an OUT/IN packet. Once this count reaches zero, the application is interrupted to indicate normal completion.

Bits 18:0 **XFRSIZ:** Transfer size
For an OUT, this field is the number of data bytes the host sends during the transfer.
For an IN, this field is the buffer size that the application has reserved for the transfer. The application is expected to program this field as an integer multiple of the maximum packet size for IN transactions (periodic and nonperiodic).

OTG_HS host channel-x DMA address register (OTG_HS_HCDMAx) (x = 0..11, where x = Channel_number)

Address offset: 0x514 + 0x20 * x

Reset value: 0x0000 0000

31	30	29	28	27	26	25	24	23	22	21	20	19	18	17	16	15	14	13	12	11	10	9	8	7	6	5	4	3	2	1	0
DMAADDR																															
rw	rw	rw	rw	rw	rw	rw	rw	rw	rw	rw	rw	rw	rw	rw	rw	rw	rw	rw	rw	rw	rw	rw	rw	rw	rw	rw	rw	rw	rw	rw	rw

Bits 31:0 **DMAADDR:** DMA address

This field holds the start address in the external memory from which the data for the endpoint must be fetched or to which it must be stored. This register is incremented on every AHB transaction.

35.12.4 Device-mode registers

OTG_HS device configuration register (OTG_HS_DCFG)

Address offset: 0x800

Reset value: 0x0220 0000

This register configures the core in peripheral mode after power-on or after certain control commands or enumeration. Do not make changes to this register after initial programming.

31	30	29	28	27	26	25	24	23	22	21	20	19	18	17	16	15	14	13	12	11	10	9	8	7	6	5	4	3	2	1	0
Reserved						PERSCHIVL		Reserved	Reserved										PFIVL	DAD								Reserved	NZLSOHSK	DSPD	
						rw	rw												rw	rw	rw	rw	rw	rw	rw	rw	rw		rw	rw	rw

Bits 31:26 Reserved, must be kept at reset value.

Bits 25:24 **PERSCHIVL:** Periodic scheduling interval

This field specifies the amount of time the Internal DMA engine must allocate for fetching periodic IN endpoint data. Based on the number of periodic endpoints, this value must be specified as 25, 50 or 75% of the (micro)frame.

- When any periodic endpoints are active, the internal DMA engine allocates the specified amount of time in fetching periodic IN endpoint data
- When no periodic endpoint is active, then the internal DMA engine services nonperiodic endpoints, ignoring this field
- After the specified time within a (micro)frame, the DMA switches to fetching nonperiodic endpoints

00: 25% of (micro)frame
01: 50% of (micro)frame
10: 75% of (micro)frame
11: Reserved

Bits 23:13 Reserved, must be kept at reset value.

Bits 12:11 **PFIVL:** Periodic (micro)frame interval

Indicates the time within a (micro) frame at which the application must be notified using the end of periodic (micro) frame interrupt. This can be used to determine if all the isochronous traffic for that frame is complete.

00: 80% of the frame interval

01: 85% of the frame interval

10: 90% of the frame interval

11: 95% of the frame interval

Bits 10:4 **DAD:** Device address

The application must program this field after every SetAddress control command.

Bit 3 Reserved, must be kept at reset value.

Bit 2 **NZLSOHSK:** Nonzero-length status OUT handshake

The application can use this field to select the handshake the core sends on receiving a nonzero-length data packet during the OUT transaction of a control transfer's Status stage.

1: Send a STALL handshake on a nonzero-length status OUT transaction and do not send the received OUT packet to the application.

0: Send the received OUT packet to the application (zero-length or nonzero-length) and send a handshake based on the NAK and STALL bits for the endpoint in the device endpoint control register.

Bits 1:0 **DSPD:** Device speed

Indicates the speed at which the application requires the core to enumerate, or the maximum speed the application can support. However, the actual bus speed is determined only after the chirp sequence is completed, and is based on the speed of the USB host to which the core is connected.

00: High speed

01: Full speed using external ULPI PHY

10: Reserved

11: Full speed using internal embedded PHY

OTG_HS device control register (OTG_HS_DCTL)

Address offset: 0x804

Reset value: 0x0000 0000

31	30	29	28	27	26	25	24	23	22	21	20	19	18	17	16	15	14	13	12	11	10	9	8	7	6	5	4	3	2	1	0
Reserved																				POPRGDNE	CGONAK	SGONAK	CGINAK	SGINAK	TCTL			GONSTS	GINSTS	SDIS	RWUSIG
																				rw	w	w	w	w	rw	rw	rw	r	r	rw	rw

Bits 31:12 Reserved, must be kept at reset value.

Bit 11 **POPRGDNE:** Power-on programming done

The application uses this bit to indicate that register programming is completed after a wakeup from power down mode.

Bit 10 **CGONAK:** Clear global OUT NAK

Writing 1 to this field clears the Global OUT NAK.

Bit 9 **SGONAK:** Set global OUT NAK

Writing 1 to this field sets the Global OUT NAK.
The application uses this bit to send a NAK handshake on all OUT endpoints.
The application must set the this bit only after making sure that the Global OUT NAK effective bit in the Core interrupt register (GONAKEFF bit in OTG_HS_GINTSTS) is cleared.

Bit 8 **CGINAK:** Clear global IN NAK

Writing 1 to this field clears the Global IN NAK.

Bit 7 **SGINAK:** Set global IN NAK

Writing 1 to this field sets the Global nonperiodic IN NAK.The application uses this bit to send a NAK handshake on all nonperiodic IN endpoints.
The application must set this bit only after making sure that the Global IN NAK effective bit in the Core interrupt register (GINAKEFF bit in OTG_HS_GINTSTS) is cleared.

Bits 6:4 **TCTL:** Test control

000: Test mode disabled
001: Test_J mode
010: Test_K mode
011: Test_SE0_NAK mode
100: Test_Packet mode
101: Test_Force_Enable
Others: Reserved

Bit 3 **GONSTS:** Global OUT NAK status

0: A handshake is sent based on the FIFO Status and the NAK and STALL bit settings.
1: No data is written to the RxFIFO, irrespective of space availability. Sends a NAK handshake on all packets, except on SETUP transactions. All isochronous OUT packets are dropped.

Bit 2 **GINSTS:** Global IN NAK status

0: A handshake is sent out based on the data availability in the transmit FIFO.
1: A NAK handshake is sent out on all nonperiodic IN endpoints, irrespective of the data availability in the transmit FIFO.

Bit 1 **SDIS:** Soft disconnect

The application uses this bit to signal the USB OTG core to perform a soft disconnect. As long as this bit is set, the host does not see that the device is connected, and the device does not receive signals on the USB. The core stays in the disconnected state until the application clears this bit.
0: Normal operation. When this bit is cleared after a soft disconnect, the core generates a device connect event to the USB host. When the device is reconnected, the USB host restarts device enumeration.
1: The core generates a device disconnect event to the USB host.

Bit 0 **RWUSIG:** Remote wakeup signaling

When the application sets this bit, the core initiates remote signaling to wake up the USB host. The application must set this bit to instruct the core to exit the Suspend state. As specified in the USB 2.0 specification, the application must clear this bit 1 ms to 15 ms after setting it.

Table 214 contains the minimum duration (according to device state) for which the Soft disconnect (SDIS) bit must be set for the USB host to detect a device disconnect. To accommodate clock jitter, it is recommended that the application add some extra delay to the specified minimum duration.

Table 214. Minimum duration for soft disconnect

Operating speed	Device state	Minimum duration
High speed	Not Idle or Suspended (Performing transactions)	125 µs
Full speed	Suspended	1 ms + 2.5 µs
Full speed	Idle	2.5 µs
Full speed	Not Idle or Suspended (Performing transactions)	2.5 µs

OTG_HS device status register (OTG_HS_DSTS)

Address offset: 0x808

Reset value: 0x0000 0010

This register indicates the status of the core with respect to USB-related events. It must be read on interrupts from the device all interrupts (OTG_HS_DAINT) register.

31	30	29	28	27	26	25	24	23	22	21	20	19	18	17	16	15	14	13	12	11	10	9	8	7	6	5	4	3	2	1	0
Reserved										FNSOF														Reserved				EERR	ENUMSPD		SUSPSTS
										r	r	r	r	r	r	r	r	r	r	r	r	r	r					r	r	r	r

Bits 31:22 Reserved, must be kept at reset value.

Bits 21:8 **FNSOF:** Frame number of the received SOF

Bits 7:4 Reserved, must be kept at reset value.

Bit 3 **EERR:** Erratic error

The core sets this bit to report any erratic errors.

Due to erratic errors, the OTG_HS controller goes into Suspended state and an interrupt is generated to the application with Early suspend bit of the Core interrupt register (ESUSP bit in OTG_HS_GINTSTS). If the early suspend is asserted due to an erratic error, the application can only perform a soft disconnect recover.

Bits 2:1 **ENUMSPD:** Enumerated speed

Indicates the speed at which the OTG_HS controller has come up after speed detection through a chirp sequence.

00: High speed

01: Reserved

10: Reserved

11: Full speed (PHY clock is running at 48 MHz)

Others: reserved

Bit 0 **SUSPSTS:** Suspend status

In peripheral mode, this bit is set as long as a Suspend condition is detected on the USB. The core enters the Suspended state when there is no activity on the USB data lines for a period of 3 ms. The core comes out of the suspend:

– When there is an activity on the USB data lines

– When the application writes to the Remote wakeup signaling bit in the Device control register (RWUSIG bit in OTG_HS_DCTL).

OTG_HS device IN endpoint common interrupt mask register (OTG_HS_DIEPMSK)

Address offset: 0x810

Reset value: 0x0000 0000

This register works with each of the Device IN endpoint interrupt (OTG_HS_DIEPINTx) registers for all endpoints to generate an interrupt per IN endpoint. The IN endpoint interrupt for a specific status in the OTG_HS_DIEPINTx register can be masked by writing to the corresponding bit in this register. Status bits are masked by default.

31	30	29	28	27	26	25	24	23	22	21	20	19	18	17	16	15	14	13	12	11	10	9	8	7	6	5	4	3	2	1	0
Reserved																		NAKM	Reserved				TXFURM	Reserved	INEPNEM	INEPNMM	ITTXFEMSK	TOM	AHBERRM	EPDM	XFRCM
																		rw					rw		rw	rw	rw	rw	rw	rw	rw

Bits 31:10 Reserved, must be kept at reset value.

Bit 13 **NAKM**: NAK interrupt mask
0: Masked interrupt
1: Unmasked interrupt

Bits 12:9 Reserved, must be kept at reset value.

Bit 8 **TXFURM:** FIFO underrun mask
0: Masked interrupt
1: Unmasked interrupt

Bit 7 Reserved, must be kept at reset value.

Bit 6 **INEPNEM:** IN endpoint NAK effective mask
0: Masked interrupt
1: Unmasked interrupt

Bit 5 **INEPNMM:** IN token received with EP mismatch mask
0: Masked interrupt
1: Unmasked interrupt

Bit 4 **ITTXFEMSK:** IN token received when TxFIFO empty mask
0: Masked interrupt
1: Unmasked interrupt

Bit 3 **TOM:** Timeout condition mask (nonisochronous endpoints)
0: Masked interrupt
1: Unmasked interrupt

Bit 2 **AHBERRM:** AHB error mask
0: Masked interrupt
1: Unmasked interrupt

Bit 1 **EPDM:** Endpoint disabled interrupt mask
0: Masked interrupt
1: Unmasked interrupt

Bit 0 **XFRCM:** Transfer completed interrupt mask
0: Masked interrupt
1: Unmasked interrupt

OTG_HS device OUT endpoint common interrupt mask register (OTG_HS_DOEPMSK)

Address offset: 0x814

Reset value: 0x0000 0000

This register works with each of the Device OUT endpoint interrupt (OTG_HS_DOEPINTx) registers for all endpoints to generate an interrupt per OUT endpoint. The OUT endpoint interrupt for a specific status in the OTG_HS_DOEPINTx register can be masked by writing into the corresponding bit in this register. Status bits are masked by default.

31	30	29	28	27	26	25	24	23	22	21	20	19	18	17	16	15	14	13	12	11	10	9	8	7	6	5	4	3	2	1	0
Reserved																	NYETMSK	NAKMSK	BERRM	Reserved			OPEM	Reserved	B2BSTUP	STSPHSRXM	OTEPDM	STUPM	AHBERRM	EPDM	XFRCM
																	rw	rw	rw				rw		rw	rw	rw	rw	rw	rw	rw

Bits 31:15 Reserved, must be kept at reset value.

Bit 14 **NYETMSK:** NYET interrupt mask
0: Masked interrupt
1: Unmasked interrupt

Bit 13 **NAKMSK:** NAK interrupt mask
0: Masked interrupt
1: Unmasked interrupt

Bit 12 **BERRM:** Babble error interrupt mask
0: Masked interrupt
1: Unmasked interrupt

Bits 11:9 Reserved, must be kept at reset value.

Bit 8 **OPEM:** OUT packet error mask
0: Masked interrupt
1: Unmasked interrupt

Bit 7 Reserved, must be kept at reset value.

Bit 6 **B2BSTUP:** Back-to-back SETUP packets received mask
Applies to control OUT endpoints only.
0: Masked interrupt
1: Unmasked interrupt

Bit 5 **STSPHSRXM:** Status phase received for control write mask
0: Masked interrupt
1: Unmasked interrupt

Bit 4 **OTEPDM:** OUT token received when endpoint disabled mask
Applies to control OUT endpoints only.
0: Masked interrupt
1: Unmasked interrupt

Bit 3 **STUPM:** SETUP phase done mask
Applies to control endpoints only.
0: Masked interrupt
1: Unmasked interrupt

Bit 2 **AHBERRM:** AHB error mask
0: Masked interrupt
1: Unmasked interrupt

Bit 1 **EPDM:** Endpoint disabled interrupt mask
0: Masked interrupt
1: Unmasked interrupt

Bit 0 **XFRCM:** Transfer completed interrupt mask
0: Masked interrupt
1: Unmasked interrupt

OTG_HS device all endpoints interrupt register (OTG_HS_DAINT)

Address offset: 0x818

Reset value: 0x0000 0000

When a significant event occurs on an endpoint, a device all endpoints interrupt register interrupts the application using the Device OUT endpoints interrupt bit or Device IN endpoints interrupt bit of the Core interrupt register (OEPINT or IEPINT in OTG_HS_GINTSTS, respectively). There is one interrupt bit per endpoint, up to a maximum of 16 bits for OUT endpoints and 16 bits for IN endpoints. For a bidirectional endpoint, the corresponding IN and OUT interrupt bits are used. Bits in this register are set and cleared when the application sets and clears bits in the corresponding Device Endpoint-x interrupt register (OTG_HS_DIEPINTx/OTG_HS_DOEPINTx).

31	30	29	28	27	26	25	24	23	22	21	20	19	18	17	16	15	14	13	12	11	10	9	8	7	6	5	4	3	2	1	0
OEPINT																IEPINT															
r	r	r	r	r	r	r	r	r	r	r	r	r	r	r	r	r	r	r	r	r	r	r	r	r	r	r	r	r	r	r	r

Bits 31:16 **OEPINT:** OUT endpoint interrupt bits
One bit per OUT endpoint:
Bit 16 for OUT endpoint 0, bit 31 for OUT endpoint 15

Bits 15:0 **IEPINT:** IN endpoint interrupt bits
One bit per IN endpoint:
Bit 0 for IN endpoint 0, bit 15 for endpoint 15

OTG_HS all endpoints interrupt mask register (OTG_HS_DAINTMSK)

Address offset: 0x81C

Reset value: 0x0000 0000

The device endpoint interrupt mask register works with the device endpoint interrupt register to interrupt the application when an event occurs on a device endpoint. However, the device all endpoints interrupt (OTG_HS_DAINT) register bit corresponding to that interrupt is still set.

31	30	29	28	27	26	25	24	23	22	21	20	19	18	17	16	15	14	13	12	11	10	9	8	7	6	5	4	3	2	1	0
OEPM																IEPM															
rw	rw	rw	rw	rw	rw	rw	rw	rw	rw	rw	rw	rw	rw	rw	rw	rw	rw	rw	rw	rw	rw	rw	rw	rw	rw	rw	rw	rw	rw	rw	rw

Bits 31:16 **OEPM:** OUT EP interrupt mask bits
One per OUT endpoint:
Bit 16 for OUT EP 0, bit 18 for OUT EP 3
0: Masked interrupt
1: Unmasked interrupt

Bits 15:0 **IEPM:** IN EP interrupt mask bits
One bit per IN endpoint:
Bit 0 for IN EP 0, bit 3 for IN EP 3
0: Masked interrupt
1: Unmasked interrupt

OTG_HS device V_{BUS} discharge time register (OTG_HS_DVBUSDIS)

Address offset: 0x0828

Reset value: 0x0000 17D7

This register specifies the V_{BUS} discharge time after V_{BUS} pulsing during SRP.

31	30	29	28	27	26	25	24	23	22	21	20	19	18	17	16	15	14	13	12	11	10	9	8	7	6	5	4	3	2	1	0
Reserved																VBUSDT															
																rw	rw	rw	rw	rw	rw	rw	rw	rw	rw	rw	rw	rw	rw	rw	rw

Bits 31:16 Reserved, must be kept at reset value.

Bits 15:0 **VBUSDT:** Device V_{BUS} discharge time
Specifies the V_{BUS} discharge time after V_{BUS} pulsing during SRP. This value equals:
V_{BUS} discharge time in PHY clocks / 1 024
Depending on your V_{BUS} load, this value may need adjusting.

OTG_HS device V_{BUS} pulsing time register (OTG_HS_DVBUSPULSE)

Address offset: 0x082C

Reset value: 0x0000 05B8

This register specifies the V_{BUS} pulsing time during SRP.

31	30	29	28	27	26	25	24	23	22	21	20	19	18	17	16	15	14	13	12	11	10	9	8	7	6	5	4	3	2	1	0
Reserved																				DVBUSP											
																				rw	rw	rw	rw	rw	rw	rw	rw	rw	rw	rw	rw

Bits 31:12 Reserved, must be kept at reset value.

Bits 11:0 **DVBUSP:** Device V_{BUS} pulsing time
Specifies the V_{BUS} pulsing time during SRP. This value equals:
V_{BUS} pulsing time in PHY clocks / 1 024

OTG_HS Device threshold control register (OTG_HS_DTHRCTL)

Address offset: 0x0830

Reset value: 0x0000 0000

31	30	29	28	27	26	25	24	23	22	21	20	19	18	17	16	15	14	13	12	11	10	9	8	7	6	5	4	3	2	1	0
Reserved				ARPEN	Reserved	RXTHRLEN									RXTHREN	Reserved					TXTHRLEN									ISOTHREN	NONISOTHREN
				rw		rw	rw	rw	rw	rw	rw	rw	rw	rw	rw						rw	rw	rw	rw	rw	rw	rw	rw	rw	rw	rw

Bits 31:28 Reserved, must be kept at reset value.

Bit 27 **ARPEN:** Arbiter parking enable

This bit controls internal DMA arbiter parking for IN endpoints. When thresholding is enabled and this bit is set to one, then the arbiter parks on the IN endpoint for which there is a token received on the USB. This is done to avoid getting into underrun conditions. By default parking is enabled.

Bit 26 Reserved, must be kept at reset value.

Bits 25: 17 **RXTHRLEN:** Receive threshold length

This field specifies the receive thresholding size in words. This field also specifies the amount of data received on the USB before the core can start transmitting on the AHB. The threshold length has to be at least eight words. The recommended value for RXTHRLEN is to be the same as the programmed AHB burst length (HBSTLEN bit in OTG_HS_GAHBCFG).

Bit 16 **RXTHREN:** Receive threshold enable

When this bit is set, the core enables thresholding in the receive direction.

Bits 15: 11 Reserved, must be kept at reset value.

Bits 10:2 **TXTHRLEN:** Transmit threshold length

This field specifies the transmit thresholding size in words. This field specifies the amount of data in bytes to be in the corresponding endpoint transmit FIFO, before the core can start transmitting on the USB. The threshold length has to be at least eight words. This field controls both isochronous and nonisochronous IN endpoint thresholds. The recommended value for TXTHRLEN is to be the same as the programmed AHB burst length (HBSTLEN bit in OTG_HS_GAHBCFG).

Bit 1 **ISOTHREN:** ISO IN endpoint threshold enable

When this bit is set, the core enables thresholding for isochronous IN endpoints.

Bit 0 **NONISOTHREN:** Nonisochronous IN endpoints threshold enable

When this bit is set, the core enables thresholding for nonisochronous IN endpoints.

OTG_HS device IN endpoint FIFO empty interrupt mask register: (OTG_HS_DIEPEMPMSK)

Address offset: 0x834

Reset value: 0x0000 0000

This register is used to control the IN endpoint FIFO empty interrupt generation (TXFE_OTG_HS_DIEPINTx).

31	30	29	28	27	26	25	24	23	22	21	20	19	18	17	16	15	14	13	12	11	10	9	8	7	6	5	4	3	2	1	0
Reserved																INEPTXFEM															
																rw	rw	rw	rw	rw	rw	rw	rw	rw	rw	rw	rw	rw	rw	rw	rw

Bits 31:16 Reserved, must be kept at reset value.

Bits 15:0 **INEPTXFEM:** IN EP Tx FIFO empty interrupt mask bits
These bits act as mask bits for OTG_HS_DIEPINTx.
TXFE interrupt one bit per IN endpoint:
Bit 0 for IN endpoint 0, bit 15 for IN endpoint 15
0: Masked interrupt
1: Unmasked interrupt

OTG_HS device each endpoint interrupt register (OTG_HS_DEACHINT)

Address offset: 0x0838

Reset value: 0x0000 0000

There is one interrupt bit for endpoint 1 IN and one interrupt bit for endpoint 1 OUT.

31	30	29	28	27	26	25	24	23	22	21	20	19	18	17	16	15	14	13	12	11	10	9	8	7	6	5	4	3	2	1	0
Reserved														OEP1INT	Reserved															IEP1INT	Reserved
														r																r	

Bits 31:18 Reserved, must be kept at reset value.

Bit 17 **OEP1INT:** OUT endpoint 1 interrupt bit

Bits 16:2 Reserved, must be kept at reset value.

Bit 1 **IEP1INT:** IN endpoint 1interrupt bit

Bit 0 Reserved, must be kept at reset value.

OTG_HS device each endpoint interrupt register mask (OTG_HS_DEACHINTMSK)

Address offset: 0x083C

Reset value: 0x0000 0000

There is one interrupt bit for endpoint 1 IN and one interrupt bit for endpoint 1 OUT.

31	30	29	28	27	26	25	24	23	22	21	20	19	18	17	16	15	14	13	12	11	10	9	8	7	6	5	4	3	2	1	0
Reserved														OEP1INTM	Reserved															IEP1INTM	Reserved
														rw																rw	

Bits 31:18 Reserved, must be kept at reset value.

Bit 17 **OEP1INTM:** OUT Endpoint 1 interrupt mask bit

Bits 16:2 Reserved, must be kept at reset value.

Bit 1 **IEP1INTM:** IN Endpoint 1 interrupt mask bit

Bit 0 Reserved, must be kept at reset value.

OTG_HS device each in endpoint-1 interrupt register (OTG_HS_DIEPEACHMSK1)

Address offset: 0x844

Reset value: 0x0000 0000

31	30	29	28	27	26	25	24	23	22	21	20	19	18	17	16	15	14	13	12	11	10	9	8	7	6	5	4	3	2	1	0
Reserved																		NAKM	Reserved			BIM	TXFURM	Reserved	INEPNEM	INEPNMM	ITTXFEMSK	TOM	AHBERRM	EPDM	XFRCM
																		rw				rw	rw		rw	rw	rw	rw	rw	rw	rw

Bits 31:14 Reserved, must be kept at reset value.

Bit 13 **NAKM:** NAK interrupt mask
0: Masked interrupt
1: unmasked interrupt

Bit 12:10 Reserved, must be kept at reset value.

Bit 9 **BIM:** BNA interrupt mask
0: Masked interrupt
1: Unmasked interrupt

Bit 8 **TXFURM:** FIFO underrun mask
0: Masked interrupt
1: Unmasked interrupt

Bit 7 Reserved, must be kept at reset value.

Bit 6 **INEPNEM:** IN endpoint NAK effective mask
0: Masked interrupt
1: Unmasked interrupt

Bit 5 **INEPNMM:** IN token received with EP mismatch mask
0: Masked interrupt
1: Unmasked interrupt

Bit 4 **ITTXFEMSK:** IN token received when TxFIFO empty mask
0: Masked interrupt
1: Unmasked interrupt

Bit 3 **TOM:** Timeout condition mask (nonisochronous endpoints)
0: Masked interrupt
1: Unmasked interrupt

Bit 2 **AHBERRM:** AHB error mask
0: Masked interrupt
1: Unmasked interrupt

Bit 1 **EPDM:** Endpoint disabled interrupt mask
0: Masked interrupt
1: Unmasked interrupt

Bit 0 **XFRCM:** Transfer completed interrupt mask
0: Masked interrupt
1: Unmasked interrupt

OTG_HS device each OUT endpoint-1 interrupt register (OTG_HS_DOEPEACHMSK1)

Address offset: 0x884

Reset value: 0x0000 0000

31	30	29	28	27	26	25	24	23	22	21	20	19	18	17	16	15	14	13	12	11	10	9	8	7	6	5	4	3	2	1	0
Reserved																	NYETM	NAKM	BERRM	Reserved		BIM	TXFURM	Reserved	INEPNEM	INEPNMM	ITTXFEMSK	TOM	AHBERRM	EPDM	XFRCM
																	rw	rw	rw			rw	rw		rw	rw	rw	rw	rw	rw	rw

Bits 31:15 Reserved, must be kept at reset value.

Bit 14 **NYETM**: NYET interrupt mask
0: Masked interrupt
1: unmasked interrupt

Bit 13 **NAKM:** NAK interrupt mask
0: Masked interrupt
1: Unmasked interrupt

Bit 12 **BERRM:** Bubble error interrupt mask
0: Masked interrupt
1: Unmasked interrupt

Bit 11:10 Reserved, must be kept at reset value.

Bit 9 **BIM:** BNA interrupt mask
0: Masked interrupt
1: Unmasked interrupt

Bit 8 **OPEM:** OUT packet error mask
0: Masked interrupt
1: Unmasked interrupt

Bits 7:3 Reserved, must be kept at reset value.

Bit 2 **AHBERRM:** AHB error mask
0: Masked interrupt
1: Unmasked interrupt

Bit 1 **EPDM:** Endpoint disabled interrupt mask
0: Masked interrupt
1: Unmasked interrupt

Bit 0 **XFRCM:** Transfer completed interrupt mask
0: Masked interrupt
1: Unmasked interrupt

OTG device endpoint-x control register (OTG_HS_DIEPCTLx) (x = 0..5, where x = Endpoint_number)

Address offset: 0x900 + 0x20 * x

Reset value: 0x0000 0000

The application uses this register to control the behavior of each logical endpoint other than endpoint 0.

31	30	29	28	27	26	25	24	23	22	21	20	19	18	17	16	15	14	13	12	11	10	9	8	7	6	5	4	3	2	1	0
EPENA	EPDIS	SODDFRM	SD0PID/SEVNFRM	SNAK	CNAK	TXFNUM				Stall	Reserved	EPTYP		NAKSTS	EONUM/DPID	USBAEP	Reserved				MPSIZ										
rs	rs	w	w	w	w	rw	rw	rw	rw	rw/ rs		rw	rw	r	r	rw					rw	rw	rw	rw	rw	rw	rw	rw	rw	rw	rw

Bit 31 **EPENA:** Endpoint enable

The application sets this bit to start transmitting data on an endpoint.

The core clears this bit before setting any of the following interrupts on this endpoint:

– SETUP phase done
– Endpoint disabled
– Transfer completed

Bit 30 **EPDIS:** Endpoint disable

The application sets this bit to stop transmitting/receiving data on an endpoint, even before the transfer for that endpoint is complete. The application must wait for the Endpoint disabled interrupt before treating the endpoint as disabled. The core clears this bit before setting the Endpoint disabled interrupt. The application must set this bit only if Endpoint enable is already set for this endpoint.

Bit 29 **SODDFRM:** Set odd frame

Applies to isochronous IN and OUT endpoints only.

Writing to this field sets the Even/Odd frame (EONUM) field to odd frame.

Bit 28 **SD0PID:** Set DATA0 PID

Applies to interrupt/bulk IN endpoints only.

Writing to this field sets the endpoint data PID (DPID) field in this register to DATA0.

SEVNFRM: Set even frame

Applies to isochronous IN endpoints only.

Writing to this field sets the Even/Odd frame (EONUM) field to even frame.

Bit 27 **SNAK:** Set NAK

A write to this bit sets the NAK bit for the endpoint.

Using this bit, the application can control the transmission of NAK handshakes on an endpoint. The core can also set this bit for OUT endpoints on a Transfer completed interrupt, or after a SETUP is received on the endpoint.

Bit 26 **CNAK:** Clear NAK

A write to this bit clears the NAK bit for the endpoint.

Bits 25:22 **TXFNUM:** TxFIFO number

These bits specify the FIFO number associated with this endpoint. Each active IN endpoint must be programmed to a separate FIFO number.

This field is valid only for IN endpoints.

Bit 21 **STALL:** STALL handshake

Applies to noncontrol, nonisochronous IN endpoints only (access type is rw).

The application sets this bit to stall all tokens from the USB host to this endpoint. If a NAK bit, Global IN NAK, or Global OUT NAK is set along with this bit, the STALL bit takes priority. Only the application can clear this bit, never the core.

Applies to control endpoints only (access type is rs).

The application can only set this bit, and the core clears it, when a SETUP token is received for this endpoint. If a NAK bit, Global IN NAK, or Global OUT NAK is set along with this bit, the STALL bit takes priority. Irrespective of this bit's setting, the core always responds to SETUP data packets with an ACK handshake.

Bit 20 Reserved, must be kept at reset value.

Bits 19:18 **EPTYP:** Endpoint type

This is the transfer type supported by this logical endpoint.

00: Control

01: Isochronous

10: Bulk

11: Interrupt

Bit 17 **NAKSTS:** NAK status

It indicates the following:

0: The core is transmitting nonNAK handshakes based on the FIFO status.

1: The core is transmitting NAK handshakes on this endpoint.

When either the application or the core sets this bit:

For nonisochronous IN endpoints: The core stops transmitting any data on an IN endpoint, even if there are data available in the TxFIFO.

For isochronous IN endpoints: The core sends out a zero-length data packet, even if there are data available in the TxFIFO.

Irrespective of this bit's setting, the core always responds to SETUP data packets with an ACK handshake.

Bit 16 **EONUM:** Even/odd frame

Applies to isochronous IN endpoints only.

Indicates the frame number in which the core transmits/receives isochronous data for this endpoint. The application must program the even/odd frame number in which it intends to transmit/receive isochronous data for this endpoint using the SEVNFRM and SODDFRM fields in this register.

0: Even frame

1: Odd frame

DPID: Endpoint data PID

Applies to interrupt/bulk IN endpoints only.

Contains the PID of the packet to be received or transmitted on this endpoint. The application must program the PID of the first packet to be received or transmitted on this endpoint, after the endpoint is activated. The application uses the SD0PID register field to program either DATA0 or DATA1 PID.

0: DATA0

1: DATA1

Bit 15 **USBAEP:** USB active endpoint

Indicates whether this endpoint is active in the current configuration and interface. The core clears this bit for all endpoints (other than EP 0) after detecting a USB reset. After receiving the SetConfiguration and SetInterface commands, the application must program endpoint registers accordingly and set this bit.

Bits 14:11 Reserved, must be kept at reset value.

Bits 10:0 **MPSIZ:** Maximum packet size

The application must program this field with the maximum packet size for the current logical endpoint. This value is in bytes.

OTG_HS device control OUT endpoint 0 control register (OTG_HS_DOEPCTL0)

Address offset: 0xB00

Reset value: 0x0000 8000

This section describes the device control OUT endpoint 0 control register. Nonzero control endpoints use registers for endpoints 1–15.

31	30	29	28	27	26	25	24	23	22	21	20	19	18	17	16	15	14	13	12	11	10	9	8	7	6	5	4	3	2	1	0
EPENA	EPDIS	Reserved		SNAK	CNAK	Reserved				Stall	SNPM	EPTYP		NAKSTS	Reserved	USBAEP	Reserved													MPSIZ	
w	r			w	w					rs	rw	r	r	r		r														r	r

Bit 31 **EPENA:** Endpoint enable

The application sets this bit to start transmitting data on endpoint 0.

The core clears this bit before setting any of the following interrupts on this endpoint:

– SETUP phase done
– Endpoint disabled
– Transfer completed

Bit 30 **EPDIS:** Endpoint disable

The application cannot disable control OUT endpoint 0.

Bits 29:28 Reserved, must be kept at reset value.

Bit 27 **SNAK:** Set NAK

A write to this bit sets the NAK bit for the endpoint.

Using this bit, the application can control the transmission of NAK handshakes on an endpoint. The core can also set this bit on a Transfer completed interrupt, or after a SETUP is received on the endpoint.

Bit 26 **CNAK:** Clear NAK

A write to this bit clears the NAK bit for the endpoint.

Bits 25:22 Reserved, must be kept at reset value.

Bit 21 **STALL:** STALL handshake

The application can only set this bit, and the core clears it, when a SETUP token is received for this endpoint. If a NAK bit or Global OUT NAK is set along with this bit, the STALL bit takes priority. Irrespective of this bit's setting, the core always responds to SETUP data packets with an ACK handshake.

Bit 20 **SNPM:** Snoop mode

This bit configures the endpoint to Snoop mode. In Snoop mode, the core does not check the correctness of OUT packets before transferring them to application memory.

Bits 19:18 **EPTYP:** Endpoint type

Hardcoded to 2'b00 for control.

Bit 17 **NAKSTS:** NAK status

Indicates the following:

0: The core is transmitting nonNAK handshakes based on the FIFO status.

1: The core is transmitting NAK handshakes on this endpoint.

When either the application or the core sets this bit, the core stops receiving data, even if there is space in the RxFIFO to accommodate the incoming packet. Irrespective of this bit's setting, the core always responds to SETUP data packets with an ACK handshake.

Bit 16 Reserved, must be kept at reset value.

Bit 15 **USBAEP:** USB active endpoint

This bit is always set to 1, indicating that a control endpoint 0 is always active in all configurations and interfaces.

Bits 14:2 Reserved, must be kept at reset value.

Bits 1:0 **MPSIZ:** Maximum packet size

The maximum packet size for control OUT endpoint 0 is the same as what is programmed in control IN endpoint 0.

00: 64 bytes

01: 32 bytes

10: 16 bytes

11: 8 bytes

OTG_HS device endpoint-x control register (OTG_HS_DOEPCTLx) (x = 1..5, where x = Endpoint_number)

Address offset for OUT endpoints: 0xB00 + 0x20 * x

Reset value: 0x0000 0000

The application uses this register to control the behavior of each logical endpoint other than endpoint 0.

31	30	29	28	27	26	25	24	23	22	21	20	19	18	17	16	15	14	13	12	11	10	9	8	7	6	5	4	3	2	1	0
EPENA	EPDIS	SODDFRM	SD0PID/SEVNFRM	SNAK	CNAK	Reserved				Stall	SNPM	EPTYP		NAKSTS	EONUM/DPID	USBAEP	Reserved				MPSIZ										
rs	rs	w	w	w	w					rw	rw	rw	rw	r	r	rw					rw	rw	rw	rw	rw	rw	rw	rw	rw	rw	rw

Bit 31 **EPENA:** Endpoint enable

Applies to IN and OUT endpoints.

The application sets this bit to start transmitting data on an endpoint.

The core clears this bit before setting any of the following interrupts on this endpoint:

– SETUP phase done
– Endpoint disabled
– Transfer completed

Bit 30 **EPDIS:** Endpoint disable

The application sets this bit to stop transmitting/receiving data on an endpoint, even before the transfer for that endpoint is complete. The application must wait for the Endpoint disabled interrupt before treating the endpoint as disabled. The core clears this bit before setting the Endpoint disabled interrupt. The application must set this bit only if Endpoint enable is already set for this endpoint.

Bit 29 **SODDFRM:** Set odd frame

Applies to isochronous OUT endpoints only.

Writing to this field sets the Even/Odd frame (EONUM) field to odd frame.

Bit 28 **SD0PID:** Set DATA0 PID

Applies to interrupt/bulk OUT endpoints only.

Writing to this field sets the endpoint data PID (DPID) field in this register to DATA0.

SEVNFRM: Set even frame

Applies to isochronous OUT endpoints only.

Writing to this field sets the Even/Odd frame (EONUM) field to even frame.

Bit 27 **SNAK:** Set NAK

A write to this bit sets the NAK bit for the endpoint.

Using this bit, the application can control the transmission of NAK handshakes on an endpoint. The core can also set this bit for OUT endpoints on a Transfer Completed interrupt, or after a SETUP is received on the endpoint.

Bit 26 **CNAK:** Clear NAK

A write to this bit clears the NAK bit for the endpoint.

Bits 25:22 Reserved, must be kept at reset value.

Bit 21 **STALL:** STALL handshake

Applies to noncontrol, nonisochronous OUT endpoints only (access type is rw).

The application sets this bit to stall all tokens from the USB host to this endpoint. If a NAK bit, Global IN NAK, or Global OUT NAK is set along with this bit, the STALL bit takes priority. Only the application can clear this bit, never the core.

Bit 20 **SNPM:** Snoop mode

This bit configures the endpoint to Snoop mode. In Snoop mode, the core does not check the correctness of OUT packets before transferring them to application memory.

Bits 19:18 **EPTYP:** Endpoint type

This is the transfer type supported by this logical endpoint.

00: Control
01: Isochronous
10: Bulk
11: Interrupt

Bit 17 **NAKSTS:** NAK status

Indicates the following:

0: The core is transmitting nonNAK handshakes based on the FIFO status.

1: The core is transmitting NAK handshakes on this endpoint.

When either the application or the core sets this bit:

The core stops receiving any data on an OUT endpoint, even if there is space in the RxFIFO to accommodate the incoming packet.

Irrespective of this bit's setting, the core always responds to SETUP data packets with an ACK handshake.

Bit 16 **EONUM:** Even/odd frame

Applies to isochronous IN and OUT endpoints only.

Indicates the frame number in which the core transmits/receives isochronous data for this endpoint. The application must program the even/odd frame number in which it intends to transmit/receive isochronous data for this endpoint using the SEVNFRM and SODDFRM fields in this register.

0: Even frame

1: Odd frame

DPID: Endpoint data PID

Applies to interrupt/bulk OUT endpoints only.

Contains the PID of the packet to be received or transmitted on this endpoint. The application must program the PID of the first packet to be received or transmitted on this endpoint, after the endpoint is activated. The application uses the SD0PID register field to program either DATA0 or DATA1 PID.

0: DATA0

1: DATA1

Bit 15 **USBAEP:** USB active endpoint

Indicates whether this endpoint is active in the current configuration and interface. The core clears this bit for all endpoints (other than EP 0) after detecting a USB reset. After receiving the SetConfiguration and SetInterface commands, the application must program endpoint registers accordingly and set this bit.

Bits 14:11 Reserved, must be kept at reset value.

Bits 10:0 **MPSIZ:** Maximum packet size

The application must program this field with the maximum packet size for the current logical endpoint. This value is in bytes.

OTG_HS device endpoint-x interrupt register (OTG_HS_DIEPINTx) (x = 0..5, where x = Endpoint_number)

Address offset: 0x908 + 0x20 * x

Reset value: 0x0000 0080

This register indicates the status of an endpoint with respect to USB- and AHB-related events. It is shown in *Figure 414*. The application must read this register when the IN endpoints interrupt bit of the Core interrupt register (IEPINT in OTG_HS_GINTSTS) is set. Before the application can read this register, it must first read the device all endpoints interrupt (OTG_HS_DAINT) register to get the exact endpoint number for the device endpoint-x interrupt register. The application must clear the appropriate bit in this register to clear the corresponding bits in the OTG_HS_DAINT and OTG_HS_GINTSTS registers.

31	30	29	28	27	26	25	24	23	22	21	20	19	18	17	16	15	14	13	12	11	10	9	8	7	6	5	4	3	2	1	0
Reserved																		NAK	Reserved	PKTDRPSTS	Reserved		TXFIFOUDRN	TXFE	INEPNE	INEPNM	ITTXFE	TOC	AHBERR	EPDISD	XFRC
																		rc_w1		rc_w1			rc_w1	r	rc_w1	rc_w1	rc_w1	rc_w1	rc_w1	rc_w1	rc_w1

Bits 31:14 Reserved, must be kept at reset value.

Bit 13 **NAK:** NAK interrupt

The core generates this interrupt when a NAK is transmitted or received by the device. In case of isochronous IN endpoints the interrupt gets generated when a zero length packet is transmitted due to unavailability of data in the Tx FIFO.

Bit 12 Reserved, must be kept at reset value.

Bit 11 **PKTDRPSTS:** Packet dropped status

This bit indicates to the application that an ISOC OUT packet has been dropped. This bit does not have an associated mask bit and does not generate an interrupt.

Bits 10:9 Reserved, must be kept at reset value.

Bit 8 **TXFIFOUDRN**: Transmit Fifo Underrun (TxfifoUndrn) The core generates this interrupt when it detects a transmit FIFO underrun condition for this endpoint.

Dependency: This interrupt is valid only when Thresholding is enabled

Bit 7 **TXFE:** Transmit FIFO empty

This interrupt is asserted when the TxFIFO for this endpoint is either half or completely empty. The half or completely empty status is determined by the TxFIFO empty level bit in the Core AHB configuration register (TXFELVL bit in OTG_HS_GAHBCFG).

Bit 6 **INEPNE:** IN endpoint NAK effective

This bit can be cleared when the application clears the IN endpoint NAK by writing to the CNAK bit in OTG_HS_DIEPCTLx.

This interrupt indicates that the core has sampled the NAK bit set (either by the application or by the core). The interrupt indicates that the IN endpoint NAK bit set by the application has taken effect in the core.

This interrupt does not guarantee that a NAK handshake is sent on the USB. A STALL bit takes priority over a NAK bit.

Bit 5 **INEPNM:** IN token received with EP mismatch

Indicates that the data in the top of the non-periodic TxFIFO belongs to an endpoint other than the one for which the IN token was received. This interrupt is asserted on the endpoint for which the IN token was received.

Bit 4 **ITTXFE:** IN token received when TxFIFO is empty

Applies to nonperiodic IN endpoints only.

Indicates that an IN token was received when the associated TxFIFO (periodic/nonperiodic) was empty. This interrupt is asserted on the endpoint for which the IN token was received.

Bit 3 **TOC:** Timeout condition

Applies only to Control IN endpoints.

Indicates that the core has detected a timeout condition on the USB for the last IN token on this endpoint.

Bit 2 **AHBERR:** AHB error

This is generated only in internal DMA mode when there is an AHB error during an AHB read/write. The application can read the corresponding endpoint DMA address register to get the error address.

Bit 1 **EPDISD:** Endpoint disabled interrupt

This bit indicates that the endpoint is disabled per the application's request.

Bit 0 **XFRC:** Transfer completed interrupt

This field indicates that the programmed transfer is complete on the AHB as well as on the USB, for this endpoint.

OTG_HS device endpoint-x interrupt register (OTG_HS_DOEPINTx) (x = 0..5, where x = Endpoint_number)

Address offset: 0xB08 + 0x20 * x

Reset value: 0x0000 0080

This register indicates the status of an endpoint with respect to USB- and AHB-related events. It is shown in *Figure 414*. The application must read this register when the OUT Endpoints Interrupt bit of the Core interrupt register (OEPINT bit in OTG_HS_GINTSTS) is set. Before the application can read this register, it must first read the device all endpoints interrupt (OTG_HS_DAINT) register to get the exact endpoint number for the device Endpoint-x interrupt register. The application must clear the appropriate bit in this register to clear the corresponding bits in the OTG_HS_DAINT and OTG_HS_GINTSTS registers.

31	30	29	28	27	26	25	24	23	22	21	20	19	18	17	16	15	14	13	12	11	10	9	8	7	6	5	4	3	2	1	0
Reserved																	NYET	NAK	BERR	Reserved			OUTPKTERR	Reserved	B2BSTUP	Reserved	OTEPDIS	STUP	AHBERR	EPDISD	XFRC
																	rc_w1	rc_w1	rc_w1				rc_w1		rc_w1		rc_w1	rc_w1	rc_w1	rc_w1	rc_w1

Bits 31:15 Reserved, must be kept at reset value.

Bit 14 **NYET:** NYET interrupt

The core generates this interrupt when a NYET response is transmitted for a nonisochronous OUT endpoint.

Bit 13 **NAK:** NAK input

The core generates this interrupt when a NAK is transmitted or received by the device. In case of isochronous IN endpoints the interrupt gets generated when a zero length packet is transmitted due to unavailability of data in the Tx FIFO.

Bit 12 **BERR:** Babble error interrupt

The core generates this interrupt when babble is received for the endpoint.

Bits 11:9 Reserved, must be kept at reset value.

Bit 8 **OUTPKTERR:** OUT packet error

This interrupt is asserted when the core detects an overflow or a CRC error for an OUT packet. This interrupt is valid only when thresholding is enabled.

Bit 7 Reserved, must be kept at reset value.

Bit 6 **B2BSTUP:** Back-to-back SETUP packets received

Applies to Control OUT endpoint only.

This bit indicates that the core has received more than three back-to-back SETUP packets for this particular endpoint.

Bit 5 Reserved, must be kept at reset value.

Bit 4 **OTEPDIS:** OUT token received when endpoint disabled

Applies only to control OUT endpoint.

Indicates that an OUT token was received when the endpoint was not yet enabled. This interrupt is asserted on the endpoint for which the OUT token was received.

Bit 3 **STUP:** SETUP phase done

Applies to control OUT endpoints only.

Indicates that the SETUP phase for the control endpoint is complete and no more back-to-back SETUP packets were received for the current control transfer. On this interrupt, the application can decode the received SETUP data packet.

Bit 2 **AHBERR:** AHB error

This is generated only in internal DMA mode when there is an AHB error during an AHB read/write. The application can read the corresponding endpoint DMA address register to get the error address.

Bit 1 **EPDISD:** Endpoint disabled interrupt

This bit indicates that the endpoint is disabled per the application's request.

Bit 0 **XFRC:** Transfer completed interrupt

This field indicates that the programmed transfer is complete on the AHB as well as on the USB, for this endpoint.

OTG_HS device IN endpoint 0 transfer size register (OTG_HS_DIEPTSIZ0)

Address offset: 0x910

Reset value: 0x0000 0000

The application must modify this register before enabling endpoint 0. Once endpoint 0 is enabled using the endpoint enable bit in the device control endpoint 0 control registers (EPENA in OTG_HS_DIEPCTL0), the core modifies this register. The application can only read this register once the core has cleared the Endpoint enable bit.

Nonzero endpoints use the registers for endpoints 1–15.

31	30	29	28	27	26	25	24	23	22	21	20	19	18	17	16	15	14	13	12	11	10	9	8	7	6	5	4	3	2	1	0
Reserved											PKTCNT		Reserved												XFRSIZ						
											rw	rw													rw	rw	rw	rw	rw	rw	rw

Bits 31:21 Reserved, must be kept at reset value.

Bits 20:19 **PKTCNT:** Packet count

Indicates the total number of USB packets that constitute the Transfer Size amount of data for endpoint 0.

This field is decremented every time a packet (maximum size or short packet) is read from the TxFIFO.

Bits 18:7 Reserved, must be kept at reset value.

Bits 6:0 **XFRSIZ:** Transfer size

Indicates the transfer size in bytes for endpoint 0. The core interrupts the application only after it has exhausted the transfer size amount of data. The transfer size can be set to the maximum packet size of the endpoint, to be interrupted at the end of each packet.

The core decrements this field every time a packet from the external memory is written to the TxFIFO.

OTG_HS device OUT endpoint 0 transfer size register (OTG_HS_DOEPTSIZ0)

Address offset: 0xB10

Reset value: 0x0000 0000

The application must modify this register before enabling endpoint 0. Once endpoint 0 is enabled using the Endpoint enable bit in the device control endpoint 0 control registers (EPENA bit in OTG_HS_DOEPCTL0), the core modifies this register. The application can only read this register once the core has cleared the Endpoint enable bit.

Nonzero endpoints use the registers for endpoints 1–15.

31	30	29	28	27	26	25	24	23	22	21	20	19	18	17	16	15	14	13	12	11	10	9	8	7	6	5	4	3	2	1	0
Reserved	STUPCNT		Reserved									PKTCNT	Reserved												XFRSIZ						
	rw	rw										rw													rw	rw	rw	rw	rw	rw	rw

Bit 31 Reserved, must be kept at reset value.

Bits 30:29 **STUPCNT:** SETUP packet count

This field specifies the number of back-to-back SETUP data packets the endpoint can receive.

01: 1 packet

10: 2 packets

11: 3 packets

Bits 28:20 Reserved, must be kept at reset value.

Bit 19 **PKTCNT:** Packet count

This field is decremented to zero after a packet is written into the RxFIFO.

Bits 18:7 Reserved, must be kept at reset value.

Bits 6:0 **XFRSIZ:** Transfer size

Indicates the transfer size in bytes for endpoint 0. The core interrupts the application only after it has exhausted the transfer size amount of data. The transfer size can be set to the maximum packet size of the endpoint, to be interrupted at the end of each packet.

The core decrements this field every time a packet is read from the RxFIFO and written to the external memory.

OTG_HS device endpoint-x transfer size register (OTG_HS_DIEPTSIZx) (x = 1..5, where x = Endpoint_number)

Address offset: 0x910 + 0x20 * x

Reset value: 0x0000 0000

The application must modify this register before enabling the endpoint. Once the endpoint is enabled using the Endpoint enable bit in the device endpoint-x control registers (EPENA bit in OTG_HS_DIEPCTLx), the core modifies this register. The application can only read this register once the core has cleared the Endpoint enable bit.

31	30	29	28	27	26	25	24	23	22	21	20	19	18	17	16	15	14	13	12	11	10	9	8	7	6	5	4	3	2	1	0
Reserved	MCNT		PKTCNT										XFRSIZ																		
	rw	rw	rw	rw	rw	rw	rw	rw	rw	rw	rw	rw	rw	rw	rw	rw	rw	rw	rw	rw	rw	rw	rw	rw	rw	rw	rw	rw	rw	rw	rw

Bit 31 Reserved, must be kept at reset value.

Bits 30:29 **MCNT:** Multi count

For periodic IN endpoints, this field indicates the number of packets that must be transmitted per frame on the USB. The core uses this field to calculate the data PID for isochronous IN endpoints.

01: 1 packet

10: 2 packets

11: 3 packets

Bit 28:19 **PKTCNT:** Packet count

Indicates the total number of USB packets that constitute the Transfer Size amount of data for this endpoint.

This field is decremented every time a packet (maximum size or short packet) is read from the TxFIFO.

Bits 18:0 **XFRSIZ:** Transfer size

This field contains the transfer size in bytes for the current endpoint. The core only interrupts the application after it has exhausted the transfer size amount of data. The transfer size can be set to the maximum packet size of the endpoint, to be interrupted at the end of each packet.

The core decrements this field every time a packet from the external memory is written to the TxFIFO.

OTG_HS device IN endpoint transmit FIFO status register (OTG_HS_DTXFSTSx) (x = 0..5, where x = Endpoint_number)

Address offset for IN endpoints: 0x918 + 0x20 + x

This read-only register contains the free space information for the Device IN endpoint TxFIFO.

31	30	29	28	27	26	25	24	23	22	21	20	19	18	17	16	15	14	13	12	11	10	9	8	7	6	5	4	3	2	1	0
Reserved																INEPTFSAV															
																r	r	r	r	r	r	r	r	r	r	r	r	r	r	r	r

31:16 Reserved, must be kept at reset value.

15:0 **INEPTFSAV:** IN endpoint TxFIFO space avail ()
Indicates the amount of free space available in the Endpoint TxFIFO.
Values are in terms of 32-bit words:
0x0: Endpoint TxFIFO is full
0x1: 1 word available
0x2: 2 words available
0xn: n words available (0 < n < 512)
Others: Reserved

OTG_HS device endpoint-x transfer size register (OTG_HS_DOEPTSIZx) (x = 1..5, where x = Endpoint_number)

Address offset: 0xB10 + 0x20 * x

Reset value: 0x0000 0000

The application must modify this register before enabling the endpoint. Once the endpoint is enabled using Endpoint Enable bit of the device endpoint-x control registers (EPENA bit in OTG_HS_DOEPCTLx), the core modifies this register. The application can only read this register once the core has cleared the Endpoint enable bit.

31	30	29	28	27	26	25	24	23	22	21	20	19	18	17	16	15	14	13	12	11	10	9	8	7	6	5	4	3	2	1	0
Reserved	RXDPID/STUPCNT		PKTCNT										XFRSIZ																		
	r/rw	r/rw	rw	rw	rw	rw	rw	rw	rw	rw	rw	rw	rw	rw	rw	rw	rw	rw	rw	rw	rw	rw	rw	rw	rw	rw	rw	rw	rw	rw	rw

Bit 31 Reserved, must be kept at reset value.

Bits 30:29 **RXDPID:** Received data PID (access type is "r")

Applies to isochronous OUT endpoints only.
This is the data PID received in the last packet for this endpoint.
00: DATA0
01: DATA2
10: DATA1
11: MDATA

STUPCNT: SETUP packet count (access type is "rw")

Applies to control OUT Endpoints only.
This field specifies the number of back-to-back SETUP data packets the endpoint can receive.
01: 1 packet
10: 2 packets
11: 3 packets

Bit 28:19 **PKTCNT:** Packet count

Indicates the total number of USB packets that constitute the Transfer Size amount of data for this endpoint.
This field is decremented every time a packet (maximum size or short packet) is written to the RxFIFO.

Bits 18:0 **XFRSIZ:** Transfer size

This field contains the transfer size in bytes for the current endpoint. The core only interrupts the application after it has exhausted the transfer size amount of data. The transfer size can be set to the maximum packet size of the endpoint, to be interrupted at the end of each packet.
The core decrements this field every time a packet is read from the RxFIFO and written to the external memory.

OTG_HS device endpoint-*x* DMA address register (OTG_HS_DIEPDMAx / OTG_HS_DOEPDMAx) (x = 0..5, where x = Endpoint_number)

Address offset for IN endpoints: 0x914 + 0x20 * x

Reset value: 0xXXXX XXXX

Address offset for OUT endpoints: 0xB14 + 0x20 * x

Reset value: 0xXXXX XXXX

31	30	29	28	27	26	25	24	23	22	21	20	19	18	17	16	15	14	13	12	11	10	9	8	7	6	5	4	3	2	1	0
DMAADDR																															
rw	rw	rw	rw	rw	rw	rw	rw	rw	rw	rw	rw	rw	rw	rw	rw	rw	rw	rw	rw	rw	rw	rw	rw	rw	rw	rw	rw	rw	rw	rw	rw

Bits 31:0 **DMAADDR:** DMA address

This bit holds the start address of the external memory for storing or fetching endpoint data.

Note: For control endpoints, this field stores control OUT data packets as well as SETUP transaction data packets. When more than three SETUP packets are received back-to-back, the SETUP data packet in the memory is overwritten. This register is incremented on every AHB transaction. The application can give only a word-aligned address.

35.12.5 OTG_HS power and clock gating control register (OTG_HS_PCGCCTL)

Address offset: 0xE00

Reset value: 0x0000 0000

This register is available in host and peripheral modes.

31	30	29	28	27	26	25	24	23	22	21	20	19	18	17	16	15	14	13	12	11	10	9	8	7	6	5	4	3	2	1	0
Reserved																											PHYSUSP	Reserved		GATEHCLK	STPPCLK
																											rw			rw	rw

Bit 31:5 Reserved, must be kept at reset value.

Bit 4 **PHYSUSP:** PHY suspended

Indicates that the PHY has been suspended. This bit is updated once the PHY is suspended after the application has set the STPPCLK bit (bit 0).

Bits 3:2 Reserved, must be kept at reset value.

Bit 1 **GATEHCLK:** Gate HCLK

The application sets this bit to gate HCLK to modules other than the AHB Slave and Master and wakeup logic when the USB is suspended or the session is not valid. The application clears this bit when the USB is resumed or a new session starts.

Bit 0 **STPPCLK:** Stop PHY clock

The application sets this bit to stop the PHY clock when the USB is suspended, the session is not valid, or the device is disconnected. The application clears this bit when the USB is resumed or a new session starts.

35.12.6 OTG_HS register map

The table below gives the USB OTG register map and reset values.

Table 215. OTG_HS register map and reset values

Offset	Register	31	30	29	28	27	26	25	24	23	22	21	20	19	18	17	16	15	14	13	12	11	10	9	8	7	6	5	4	3	2	1	0
0x000	OTG_HS_GOTGCTL	Reserved												BSVLD	ASVLD	DBCT	CIDSTS	Reserved				DHNPEN	HSHNPEN	HNPRQ	HNGSCS	Reserved						SRQ	SRQSCS
	Reset value													0	0	0	1					0	0	0	0							0	0
0x004	OTG_HS_GOTGINT	Reserved												DBCDNE	ADTOCHG	HNGDET	Reserved							HNSSCHG	SRSSCHG	Reserved					SEDET	Res.	
	Reset value													0	0	0								0	0						0		
0x008	OTG_HS_GAHBCFG	Reserved																							PTXFELVL	TXFELVL	Reserved						GINT
	Reset value																								0	0							0

Table 215. OTG_HS register map and reset values (continued)

Offset	Register	31	30	29	28	27	26	25	24	23	22	21	20	19	18	17	16	15	14	13	12	11	10	9	8	7	6	5	4	3	2	1	0
0x00C	OTG_HS_GUSBCFG	CTXPKT	FDMOD	FHMOD	Reserved			ULPIIPD	PTCI	PCCI	TSDPS	ULPIEVBUSI	ULPIEVBUSD	ULPICSM	ULPIAR	ULPIFSLS	Reserved	PHYLPCS	Reserved	TRDT				HNPCAP	SRPCAP	Reserved	PHYSEL	Reserved			TOCAL		
	Reset value	0	0	0				0	0	0	0	0	0	0	0	0		0		0	1	0	1	0	0		1				0	0	0
0x010	OTG_HS_GRSTCTL	AHBIDL	DMAREQ	Reserved																			TXFNUM					TXFFLSH	RXFFLSH	Reserved	FCRST	HSRST	CSRST
	Reset value	1	0																				0	0	0	0	0	0	0	0	0	0	0
0x014	OTG_HS_GINTSTS	WKUINT	SRQINT	DISCINT	CIDSCHG	Reserved	PTXFE	HCINT	HPRTINT	Reserved	DATAFSUSP	IPXFR/INCOMPISOOUT	IISOIXFR	OEPINT	IEPINT	Reserved		EOPF	ISOODRP	ENUMDNE	USBRST	USBSUSP	ESUSP	Reserved		GONAKEFF	GINAKEFF	NPTXFE	RXFLVL	SOF	OTGINT	MMIS	CMOD
	Reset value	0	0	0	0		1	0	0		0	0	0	0	0			0	0	0	0	0	0			0	0	1	0	0	0	0	0
0x018	OTG_HS_GINTMSK	WUIM	SRQIM	DISCINT	CIDSCHGM	Reserved	PTXFEM	HCIM	PRTIM	Reserved	FSUSPM	IPXFRM/IISOOXFRM	IISOIXFRM	OEPINT	IEPINT	Reserved		EOPFM	ISOODRPM	ENUMDNEM	USBRST	USBSUSPM	ESUSPM	Reserved		GONAKEFFM	GINAKEFFM	NPTXFEM	RXFLVLM	SOFM	OTGINT	MMISM	Reserved
	Reset value	0	0	0	0		0	0	0		0	0	0	0	0			0	0	0	0	0	0			0	0	0	0	0	0	0	
0x01C	OTG_HS_GRXSTSR (Host mode)	Reserved											PKTSTS				DPID		BCNT											CHNUM			
	Reset value												0	0	0	0		0	0	0	0	0	0	0	0	0	0	0	0	0	0	0	
	OTG_HS_GRXSTSR (peripheral mode)	Reserved							FRMNUM				PKTSTS				DPID		BCNT											EPNUM			
	Reset value								0	0	0	0	0	0	0	0	0	0	0	0	0	0	0	0	0	0	0	0	0	0	0	0	0
0x020	OTG_HS_GRXSTSP (Host mode)	Reserved											PKTSTS				DPID		BCNT											CHNUM			
	Reset value												0	0	0	0		0	0	0	0	0	0	0	0	0	0	0	0	0	0	0	
	OTG_HS_GRXSTSP (peripheral mode)	Reserved							FRMNUM				PKTSTS				DPID		BCNT											EPNUM			
	Reset value								0	0	0	0	0	0	0	0	0	0	0	0	0	0	0	0	0	0	0	0	0	0	0	0	0
0x024	OTG_HS_GRXFSIZ	Reserved																RXFD															
	Reset value																	0	0	0	0	0	1	0	0	0	0	0	0	0	0	0	0

Table 215. OTG_HS register map and reset values (continued)

Offset	Register	31	30	29	28	27	26	25	24	23	22	21	20	19	18	17	16	15	14	13	12	11	10	9	8	7	6	5	4	3	2	1	0
0x028	OTG_HS_GNPTXFSIZ (Host mode)	NPTXFD																NPTXFSA															
	Reset value	0	0	0	0	0	0	0	0	0	0	0	0	0	0	0	0	0	0	0	0	0	0	1	0	0	0	0	0	0	0	0	0
	OTG_HS_GNPTXFSIZ (peripheral mode)	TX0FD																TX0FSA															
	Reset value	0	0	0	0	0	0	0	0	0	0	0	0	0	0	0	0	0	0	0	0	0	0	1	0	0	0	0	0	0	0	0	0
0x02C	OTG_HS_GNPTXSTS	Res.	NPTXQTOP							NPTQXSAV								NPTXFSAV															
	Reset value		0	0	0	0	0	0	0	0	0	0	0	1	0	0	0	0	0	0	0	0	1	0	0	0	0	0	0	0	0	0	0
0x030	OTG_HS_GI2CCTL	BSYDNE	RW	Reserved	I2CDATSE0	I2CDEVADR		Reserved	ACK	I2CEN	ADDR							REGADDR								RWDATA							
0x038	OTG_HS_GCCFG	Reserved										NOVBUSSENS	SOFOUTEN	VBUSBSEN	VBUSASEN	.I2CPADEN	.PWRDWN	Reserved															
	Reset value											0	0	0	0	0	0																
0x03C	OTG_HS_CID	PRODUCT_ID																															
	Reset value	0	0	0	0	0	0	0	0	0	0	0	0	0	0	0	0	0	0	0	1	0	0	0	1	0	0	0	0	0	0	0	0
0x100	OTG_HS_HPTXFSIZ	PTXFD																PTXSA															
	Reset value	0	0	0	0	0	0	1	0	0	0	0	0	0	0	0	0	0	0	0	0	1	0	0	0	0	0	0	0	0	0	0	0
0x104	OTG_HS_DIEPTXF1	INEPTXFD																INEPTXSA															
	Reset value	0	0	0	0	0	0	1	0	0	0	0	0	0	0	0	0	0	0	0	0	0	1	0	0	0	0	0	0	0	0	0	0
0x108	OTG_HS_DIEPTXF2	INEPTXFD																INEPTXSA															
	Reset value	0	0	0	0	0	0	1	0	0	0	0	0	0	0	0	0	0	0	0	0	0	1	0	0	0	0	0	0	0	0	0	0
0x10C	OTG_HS_DIEPTXF3	INEPTXFD																INEPTXSA															
	Reset value	0	0	0	0	0	0	1	0	0	0	0	0	0	0	0	0	0	0	0	0	0	1	0	0	0	0	0	0	0	0	0	0
0x110	OTG_HS_DIEPTXF4	INEPTXFD																INEPTXSA															
	Reset value	0	0	0	0	0	0	1	0	0	0	0	0	0	0	0	0	0	0	0	0	0	1	0	0	0	0	0	0	0	0	0	0
0x400	OTG_HS_HCFG	Reserved																													FSLSS	FSLSPCS	
	Reset value																														0	0	0
0x404	OTG_HS_HFIR	Reserved																FRIVL															
	Reset value																	1	1	1	0	1	0	1	0	0	1	1	0	0	0	0	0
0x408	OTG_HS_HFNUM	FTREM																FRNUM															
	Reset value	0	0	0	0	0	0	0	0	0	0	0	0	0	0	0	0	0	0	1	1	1	1	1	1	1	1	1	1	1	1	1	1
0x410	OTG_HS_HPTXSTS	PTXQTOP								PTXQSAV								PTXFSAVL															
	Reset value	0	0	0	0	0	0	0	0	Y	Y	Y	Y	Y	Y	Y	Y	Y	Y	Y	Y	Y	Y	Y	Y	Y	Y	Y	Y	Y	Y	Y	Y

Table 215. OTG_HS register map and reset values (continued)

Offset	Register	31	30	29	28	27	26	25	24	23	22	21	20	19	18	17	16	15	14	13	12	11	10	9	8	7	6	5	4	3	2	1	0
0x414	OTG_HS_HAINT	Reserved																HAINT															
	Reset value																	0	0	0	0	0	0	0	0	0	0	0	0	0	0	0	0
0x418	OTG_HS_HAINTMSK	Reserved																HAINTM															
	Reset value																	0	0	0	0	0	0	0	0	0	0	0	0	0	0	0	0
0x440	OTG_HS_HPRT	Reserved													PSPD		PTCTL				PPWR	PLSTS		Reserved	PRST	PSUSP	PRES	POCCHNG	POCA	PENCHNG	PENA	PCDET	PCSTS
	Reset value														0	0	0	0	0	0	0	0	0	0	0	0	0	0	0	0	0	0	0
0x500	OTG_HS_HCCHAR0	CHENA	CHDIS	ODDFRM	DAD							MC		EPTYP		LSDEV	Reserved	EPDIR	EPNUM					MPSIZ									
	Reset value	0	0	0	0	0	0	0	0	0	0	0	0	0	0	0		0	0	0	0	0	0	0	0	0	0	0	0	0	0	0	0
0x520	OTG_HS_HCCHAR1	CHENA	CHDIS	ODDFRM	DAD							MC		EPTYP		LSDEV	Reserved	EPDIR	EPNUM					MPSIZ									
	Reset value	0	0	0	0	0	0	0	0	0	0	0	0	0	0	0		0	0	0	0	0	0	0	0	0	0	0	0	0	0	0	0
0x540	OTG_HS_HCCHAR2	CHENA	CHDIS	ODDFRM	DAD							MC		EPTYP		LSDEV	Reserved	EPDIR	EPNUM					MPSIZ									
	Reset value	0	0	0	0	0	0	0	0	0	0	0	0	0	0	0		0	0	0	0	0	0	0	0	0	0	0	0	0	0	0	0
0x560	OTG_HS_HCCHAR3	CHENA	CHDIS	ODDFRM	DAD							MC		EPTYP		LSDEV	Reserved	EPDIR	EPNUM					MPSIZ									
	Reset value	0	0	0	0	0	0	0	0	0	0	0	0	0	0	0		0	0	0	0	0	0	0	0	0	0	0	0	0	0	0	0
0x580	OTG_HS_HCCHAR4	CHENA	CHDIS	ODDFRM	DAD							MC		EPTYP		LSDEV	Reserved	EPDIR	EPNUM					MPSIZ									
	Reset value	0	0	0	0	0	0	0	0	0	0	0	0	0	0	0		0	0	0	0	0	0	0	0	0	0	0	0	0	0	0	0
0x5A0	OTG_HS_HCCHAR5	CHENA	CHDIS	ODDFRM	DAD							MC		EPTYP		LSDEV	Reserved	EPDIR	EPNUM					MPSIZ									
	Reset value	0	0	0	0	0	0	0	0	0	0	0	0	0	0	0		0	0	0	0	0	0	0	0	0	0	0	0	0	0	0	0
0x5C0	OTG_HS_HCCHAR6	CHENA	CHDIS	ODDFRM	DAD							MC		EPTYP		LSDEV	Reserved	EPDIR	EPNUM					MPSIZ									
	Reset value	0	0	0	0	0	0	0	0	0	0	0	0	0	0	0		0	0	0	0	0	0	0	0	0	0	0	0	0	0	0	0
0x5E0	OTG_HS_HCCHAR7	CHENA	CHDIS	ODDFRM	DAD							MC		EPTYP		LSDEV	Reserved	EPDIR	EPNUM					MPSIZ									
	Reset value	0	0	0	0	0	0	0	0	0	0	0	0	0	0	0		0	0	0	0	0	0	0	0	0	0	0	0	0	0	0	0
0x600	OTG_HS_HCCHAR8	CHENA	CHDIS	ODDFRM	DAD							MC		EPTYP		LSDEV	Reserved	EPDIR	EPNUM					MPSIZ									
	Reset value	0	0	0	0	0	0	0	0	0	0	0	0	0	0	0		0	0	0	0	0	0	0	0	0	0	0	0	0	0	0	0

Table 215. OTG_HS register map and reset values (continued)

Offset	Register	31	30	29	28	27	26	25	24	23	22	21	20	19	18	17	16	15	14	13	12	11	10	9	8	7	6	5	4	3	2	1	0
0x620	OTG_HS_HCCHAR9	CHENA	CHDIS	ODDFRM	DAD							MC		EPTYP		LSDEV	Reserved	EPDIR	EPNUM				MPSIZ										
	Reset value	0	0	0	0	0	0	0	0	0	0	0	0	0	0	0		0	0	0	0	0	0	0	0	0	0	0	0	0	0	0	0
0x640	OTG_HS_HCCHAR10	CHENA	CHDIS	ODDFRM	DAD							MC		EPTYP		LSDEV	Reserved	EPDIR	EPNUM				MPSIZ										
	Reset value	0	0	0	0	0	0	0	0	0	0	0	0	0	0	0		0	0	0	0	0	0	0	0	0	0	0	0	0	0	0	0
0x660	OTG_HS_HCCHAR11	CHENA	CHDIS	ODDFRM	DAD							MC		EPTYP		LSDEV	Reserved	EPDIR	EPNUM				MPSIZ										
	Reset value	0	0	0	0	0	0	0	0	0	0	0	0	0	0	0		0	0	0	0	0	0	0	0	0	0	0	0	0	0	0	0
0x504	OTG_HS_HCSPLT0	SPLITEN	Reserved														COMPLSPLT	XACTPOS					HUBADDR				PRTADDR						
	Reset value	0															0	0	0	0	0	0	0	0	0	0	0	0	0	0	0	0	0
0x508	OTG_HS_HCINT0	Reserved																					DTERR	FRMOR	BBERR	TXERR	NYET	ACK	NAK	STALL	AHBERR	CHH	XFRC
	Reset value																						0	0	0	0	0	0	0	0	0	0	0
0x524	OTG_HS_HCSPL1	SPLITEN	Reserved														COMPLSPLT	XACTPOS					HUBADDR				PRTADDR						
	Reset value	0															0	0	0	0	0	0	0	0	0	0	0	0	0	0	0	0	0
0x528	OTG_HS_HCINT1	Reserved																					DTERR	FRMOR	BBERR	TXERR	NYET	ACK	NAK	STALL	AHBERR	CHH	XFRC
	Reset value																						0	0	0	0	0	0	0	0	0	0	0
0x544	OTG_HS_HCSPLT2	SPLITEN	Reserved														COMPLSPLT	XACTPOS					HUBADDR				PRTADDR						
	Reset value	0															0	0	0	0	0	0	0	0	0	0	0	0	0	0	0	0	0
0x548	OTG_HS_HCINT2	Reserved																					DTERR	FRMOR	BBERR	TXERR	NYET	ACK	NAK	STALL	AHBERR	CHH	XFRC
	Reset value																						0	0	0	0	0	0	0	0	0	0	0
0x564	OTG_HS_HCSPLT3	SPLITEN	Reserved														COMPLSPLT	XACTPOS					HUBADDR				PRTADDR						
	Reset value	0															0	0	0	0	0	0	0	0	0	0	0	0	0	0	0	0	0
0x568	OTG_HS_HCINT3	Reserved																					DTERR	FRMOR	BBERR	TXERR	NYET	ACK	NAK	STALL	AHBERR	CHH	XFRC
	Reset value																						0	0	0	0	0	0	0	0	0	0	0

Table 215. OTG_HS register map and reset values (continued)

Offset	Register	31	30	29	28	27	26	25	24	23	22	21	20	19	18	17	16	15	14	13	12	11	10	9	8	7	6	5	4	3	2	1	0
0x584	OTG_HS_HCSPLT4	SPLITEN	Reserved														COMPLSPLT	XACTPOS		HUBADDR							PRTADDR						
	Reset value	0															0	0	0	0	0	0	0	0	0	0	0	0	0	0	0	0	0
0x588	OTG_HS_HCINT4	Reserved																					DTERR	FRMOR	BBERR	TXERR	NYET	ACK	NAK	STALL	AHBERR	CHH	XFRC
	Reset value																						0	0	0	0	0	0	0	0	0	0	0
0x5A4	OTG_HS_HCSPLT5	SPLITEN	Reserved														COMPLSPLT	XACTPOS		HUBADDR							PRTADDR						
	Reset value	0															0	0	0	0	0	0	0	0	0	0	0	0	0	0	0	0	0
0x5A8	OTG_HS_HCINT5	Reserved																					DTERR	FRMOR	BBERR	TXERR	NYET	ACK	NAK	STALL	AHBERR	CHH	XFRC
	Reset value																						0	0	0	0	0	0	0	0	0	0	0
0x5C4	OTG_HS_HCSPLT6	SPLITEN	Reserved														COMPLSPLT	XACTPOS		HUBADDR							PRTADDR						
	Reset value	0															0	0	0	0	0	0	0	0	0	0	0	0	0	0	0	0	0
0x5C8	OTG_HS_HCINT6	Reserved																					DTERR	FRMOR	BBERR	TXERR	NYET	ACK	NAK	STALL	AHBERR	CHH	XFRC
	Reset value																						0	0	0	0	0	0	0	0	0	0	0
0x5E4	OTG_HS_HCSPLT7	SPLITEN	Reserved														COMPLSPLT	XACTPOS		HUBADDR							PRTADDR						
	Reset value	0															0	0	0	0	0	0	0	0	0	0	0	0	0	0	0	0	0
0x5E8	OTG_HS_HCINT7	Reserved																					DTERR	FRMOR	BBERR	TXERR	NYET	ACK	NAK	STALL	AHBERR	CHH	XFRC
	Reset value																						0	0	0	0	0	0	0	0	0	0	0
0x604	OTG_HS_HCSPLT8	SPLITEN	Reserved														COMPLSPLT	XACTPOS		HUBADDR							PRTADDR						
	Reset value	0															0	0	0	0	0	0	0	0	0	0	0	0	0	0	0	0	0
0x608	OTG_HS_HCINT8	Reserved																					DTERR	FRMOR	BBERR	TXERR	NYET	ACK	NAK	STALL	AHBERR	CHH	XFRC
	Reset value																						0	0	0	0	0	0	0	0	0	0	0

Table 215. OTG_HS register map and reset values (continued)

Offset	Register	31	30	29	28	27	26	25	24	23	22	21	20	19	18	17	16	15	14	13	12	11	10	9	8	7	6	5	4	3	2	1	0
0x624	OTG_HS_HCSPLT9	SPLITEN	Reserved														COMPLSPLT	XACTPOS		HUBADDR							PRTADDR						
	Reset value	0															0	0	0	0	0	0	0	0	0	0	0	0	0	0	0	0	0
0x628	OTG_HS_HCINT9	Reserved																					DTERR	FRMOR	BBERR	TXERR	NYET	ACK	NAK	STALL	AHBERR	CHH	XFRC
	Reset value																						0	0	0	0	0	0	0	0	0	0	0
0x644	OTG_HS_HCSPLT10	SPLITEN	Reserved														COMPLSPLT	XACTPOS		HUBADDR							PRTADDR						
	Reset value	0															0	0	0	0	0	0	0	0	0	0	0	0	0	0	0	0	0
0x648	OTG_HS_HCINT10	Reserved																					DTERR	FRMOR	BBERR	TXERR	NYET	ACK	NAK	STALL	AHBERR	CHH	XFRC
	Reset value																						0	0	0	0	0	0	0	0	0	0	0
0x664	OTG_HS_HCSPLT11	SPLITEN	Reserved														COMPLSPLT	XACTPOS		HUBADDR							PRTADDR						
	Reset value	0															0	0	0	0	0	0	0	0	0	0	0	0	0	0	0	0	0
0x668	OTG_HS_HCINT11	Reserved																					DTERR	FRMOR	BBERR	TXERR	NYET	ACK	NAK	STALL	AHBERR	CHH	XFRC
	Reset value																						0	0	0	0	0	0	0	0	0	0	0
0x50C	OTG_HS_HCINTMSK0	Reserved																					DTERRM	FRMORM	BBERRM	TXERRM	NYET	ACKM	NAKM	STALLM	AHBERRM	CHHM	XFRCM
	Reset value																						0	0	0	0	0	0	0	0	0	0	0
0x52C	OTG_HS_HCINTMSK1	Reserved																					DTERRM	FRMORM	BBERRM	TXERRM	NYET	ACKM	NAKM	STALLM	AHBERRM	CHHM	XFRCM
	Reset value																						0	0	0	0	0	0	0	0	0	0	0
0x54C	OTG_HS_HCINTMSK2	Reserved																					DTERRM	FRMORM	BBERRM	TXERRM	NYET	ACKM	NAKM	STALLM	AHBERRM	CHHM	XFRCM
	Reset value																						0	0	0	0	0	0	0	0	0	0	0
0x56C	OTG_HS_HCINTMSK3	Reserved																					DTERRM	FRMORM	BBERRM	TXERRM	NYET	ACKM	NAKM	STALLM	AHBERRM	CHHM	XFRCM
	Reset value																						0	0	0	0	0	0	0	0	0	0	0
0x58C	OTG_HS_HCINTMSK4	Reserved																					DTERRM	FRMORM	BBERRM	TXERRM	NYET	ACKM	NAKM	STALLM	AHBERRM	CHHM	XFRCM
	Reset value																						0	0	0	0	0	0	0	0	0	0	0

Table 215. OTG_HS register map and reset values (continued)

Offset	Register	31	30	29	28	27	26	25	24	23	22	21	20	19	18	17	16	15	14	13	12	11	10	9	8	7	6	5	4	3	2	1	0
0x5AC	OTG_HS_HCINTMSK5	Reserved																					DTERRM	FRMORM	BBERRM	TXERRM	NYET	ACKM	NAKM	STALLM	AHBERRM	CHHM	XFRCM
	Reset value																						0	0	0	0	0	0	0	0	0	0	0
0x5CC	OTG_HS_HCINTMSK6	Reserved																					DTERRM	FRMORM	BBERRM	TXERRM	NYET	ACKM	NAKM	STALLM	AHBERRM	CHHM	XFRCM
	Reset value																						0	0	0	0	0	0	0	0	0	0	0
0x5EC	OTG_HS_HCINTMSK7	Reserved																					DTERRM	FRMORM	BBERRM	TXERRM	NYET	ACKM	NAKM	STALLM	AHBERRM	CHHM	XFRCM
	Reset value																						0	0	0	0	0	0	0	0	0	0	0
0x60C	OTG_HS_HCINTMSK8	Reserved																					DTERRM	FRMORM	BBERRM	TXERRM	NYET	ACKM	NAKM	STALLM	AHBERRM	CHHM	XFRCM
	Reset value																						0	0	0	0	0	0	0	0	0	0	0
0x62C	OTG_HS_HCINTMSK9	Reserved																					DTERRM	FRMORM	BBERRM	TXERRM	NYET	ACKM	NAKM	STALLM	AHBERRM	CHHM	XFRCM
	Reset value																						0	0	0	0	0	0	0	0	0	0	0
0x64C	OTG_HS_HCINTMSK10	Reserved																					DTERRM	FRMORM	BBERRM	TXERRM	NYET	ACKM	NAKM	STALLM	AHBERRM	CHHM	XFRCM
	Reset value																						0	0	0	0	0	0	0	0	0	0	0
0x66C	OTG_HS_HCINTMSK11	Reserved																					DTERRM	FRMORM	BBERRM	TXERRM	NYET	ACKM	NAKM	STALLM	AHBERRM	CHHM	XFRCM
	Reset value																						0	0	0	0	0	0	0	0	0	0	0
0x510	OTG_HS_HCTSIZ0	DOPING	DPID		PKTCNT										XFRSIZ																		
	Reset value	0	0	0	0	0	0	0	0	0	0	0	0	0	0	0	0	0	0	0	0	0	0	0	0	0	0	0	0	0	0	0	0
0x530	OTG_HS_HCTSIZ1	DOPING	DPID		PKTCNT										XFRSIZ																		
	Reset value	0	0	0	0	0	0	0	0	0	0	0	0	0	0	0	0	0	0	0	0	0	0	0	0	0	0	0	0	0	0	0	0
0x550	OTG_HS_HCTSIZ2	DOPING	DPID		PKTCNT										XFRSIZ																		
	Reset value	0	0	0	0	0	0	0	0	0	0	0	0	0	0	0	0	0	0	0	0	0	0	0	0	0	0	0	0	0	0	0	0
0x570	OTG_HS_HCTSIZ3	DOPING	DPID		PKTCNT										XFRSIZ																		
	Reset value	0	0	0	0	0	0	0	0	0	0	0	0	0	0	0	0	0	0	0	0	0	0	0	0	0	0	0	0	0	0	0	0

Table 215. OTG_HS register map and reset values (continued)

Offset	Register	31	30	29	28	27	26	25	24	23	22	21	20	19	18	17	16	15	14	13	12	11	10	9	8	7	6	5	4	3	2	1	0
0x590	OTG_HS_HCTSIZ4	DOPING	DPID		PKTCNT										XFRSIZ																		
	Reset value	0	0	0	0	0	0	0	0	0	0	0	0	0	0	0	0	0	0	0	0	0	0	0	0	0	0	0	0	0	0	0	0
0x5B0	OTG_HS_HCTSIZ5	DOPING	DPID		PKTCNT										XFRSIZ																		
	Reset value	0	0	0	0	0	0	0	0	0	0	0	0	0	0	0	0	0	0	0	0	0	0	0	0	0	0	0	0	0	0	0	0
0x5D0	OTG_HS_HCTSIZ6	DOPING	DPID		PKTCNT										XFRSIZ																		
	Reset value	0	0	0	0	0	0	0	0	0	0	0	0	0	0	0	0	0	0	0	0	0	0	0	0	0	0	0	0	0	0	0	0
0x5F0	OTG_HS_HCTSIZ7	DOPING	DPID		PKTCNT										XFRSIZ																		
	Reset value	0	0	0	0	0	0	0	0	0	0	0	0	0	0	0	0	0	0	0	0	0	0	0	0	0	0	0	0	0	0	0	0
0x610	OTG_HS_HCTSIZ8	DOPING	DPID		PKTCNT										XFRSIZ																		
	Reset value	0	0	0	0	0	0	0	0	0	0	0	0	0	0	0	0	0	0	0	0	0	0	0	0	0	0	0	0	0	0	0	0
0x630	OTG_HS_HCTSIZ9	DOPING	DPID		PKTCNT										XFRSIZ																		
	Reset value	0	0	0	0	0	0	0	0	0	0	0	0	0	0	0	0	0	0	0	0	0	0	0	0	0	0	0	0	0	0	0	0
0x650	OTG_HS_HCTSIZ10	DOPING	DPID		PKTCNT										XFRSIZ																		
	Reset value	0	0	0	0	0	0	0	0	0	0	0	0	0	0	0	0	0	0	0	0	0	0	0	0	0	0	0	0	0	0	0	0
0x670	OTG_HS_HCTSIZ11	DOPING	DPID		PKTCNT										XFRSIZ																		
	Reset value	0	0	0	0	0	0	0	0	0	0	0	0	0	0	0	0	0	0	0	0	0	0	0	0	0	0	0	0	0	0	0	0
0x514	OTG_HS_HCDMA0	DMAADDR																															
	Reset value	0	0	0	0	0	0	0	0	0	0	0	0	0	0	0	0	0	0	0	0	0	0	0	0	0	0	0	0	0	0	0	0
0x524	OTG_HS_HCDMA1	DMAADDR																															
	Reset value	0	0	0	0	0	0	0	0	0	0	0	0	0	0	0	0	0	0	0	0	0	0	0	0	0	0	0	0	0	0	0	0
0x544	OTG_HS_HCDMA2	DMAADDR																															
	Reset value	0	0	0	0	0	0	0	0	0	0	0	0	0	0	0	0	0	0	0	0	0	0	0	0	0	0	0	0	0	0	0	0
0x564	OTG_HS_HCDMA3	DMAADDR																															
	Reset value	0	0	0	0	0	0	0	0	0	0	0	0	0	0	0	0	0	0	0	0	0	0	0	0	0	0	0	0	0	0	0	0
0x584	OTG_HS_HCDMA4	DMAADDR																															
	Reset value	0	0	0	0	0	0	0	0	0	0	0	0	0	0	0	0	0	0	0	0	0	0	0	0	0	0	0	0	0	0	0	0
0x5A4	OTG_HS_HCDMA5	DMAADDR																															
	Reset value	0	0	0	0	0	0	0	0	0	0	0	0	0	0	0	0	0	0	0	0	0	0	0	0	0	0	0	0	0	0	0	0

Table 215. OTG_HS register map and reset values (continued)

Offset	Register	31	30	29	28	27	26	25	24	23	22	21	20	19	18	17	16	15	14	13	12	11	10	9	8	7	6	5	4	3	2	1	0
0x5C4	OTG_HS_HCDMA6	DMAADDR																															
	Reset value	0	0	0	0	0	0	0	0	0	0	0	0	0	0	0	0	0	0	0	0	0	0	0	0	0	0	0	0	0	0	0	0
0x5E4	OTG_HS_HCDMA7	DMAADDR																															
	Reset value	0	0	0	0	0	0	0	0	0	0	0	0	0	0	0	0	0	0	0	0	0	0	0	0	0	0	0	0	0	0	0	0
0x604	OTG_HS_HCDMA8	DMAADDR																															
	Reset value	0	0	0	0	0	0	0	0	0	0	0	0	0	0	0	0	0	0	0	0	0	0	0	0	0	0	0	0	0	0	0	0
0x624	OTG_HS_HCDMA9	DMAADDR																															
	Reset value	0	0	0	0	0	0	0	0	0	0	0	0	0	0	0	0	0	0	0	0	0	0	0	0	0	0	0	0	0	0	0	0
0x644	OTG_HS_HCDMA10	DMAADDR																															
	Reset value	0	0	0	0	0	0	0	0	0	0	0	0	0	0	0	0	0	0	0	0	0	0	0	0	0	0	0	0	0	0	0	0
0x664	OTG_HS_HCDMA11	DMAADDR																															
	Reset value	0	0	0	0	0	0	0	0	0	0	0	0	0	0	0	0	0	0	0	0	0	0	0	0	0	0	0	0	0	0	0	0
0x800	OTG_HS_DCFG	Reserved						PERSCHIVL		Reserved	Reserved										PFIVL		DAD							Reserved	NZLSOHSK	DSPD	
	Reset value							1	0												0	0	0	0	0	0	0	0	0		0	0	0
0x804	OTG_HS_DCTL	Reserved																				POPRGDNE	CGONAK	SGONAK	CGINAK	SGINAK	TCTL			GONSTS	GINSTS	SDIS	RWUSIG
	Reset value																					0	0	0	0	0	0	0	0	0	0	0	0
0x808	OTG_HS_DSTS	Reserved									FNSOF															Reserved				EERR	ENUMSPD		SUSPSTS
	Reset value										0	0	0	0	0	0	0	0	0	0	0	0	0	0	0					0	0	0	0
0x810	OTG_HS_DIEPMSK	Reserved																		NAKM	Reserved					TXFURM	Reserved	INEPNEM	INEPNMM	ITTXFEMSK	TOM	AHBERRM	EPDM	XFRCM
	Reset value																			0						0	0	0	0	0	0	0	0	0
0x814	OTG_HS_DOEPMSK	Reserved																	NYETMSK	NAKMSK	BERRM	Reserved				OPEM	Reserved	B2BSTUP	STSPHSRXM	OTEPDM	STUPM	AHBERRM	EPDM	XFRCM
	Reset value																		0	0	0					0		0	0	0	0	0	0	0
0x818	OTG_HS_DAINT	OEPINT																IEPINT																
	Reset value	0	0	0	0	0	0	0	0	0	0	0	0	0	0	0	0	0	0	0	0	0	0	0	0	0	0	0	0	0	0	0	0
0x81C	OTG_HS_DAINTMSK	OEPM																IEPM																
	Reset value	0	0	0	0	0	0	0	0	0	0	0	0	0	0	0	0	0	0	0	0	0	0	0	0	0	0	0	0	0	0	0	0
0x828	OTG_HS_DVBUSDIS	Reserved																VBUSDT																
	Reset value																	0	0	0	1	0	1	1	1	1	1	0	1	0	1	1	1

Table 215. OTG_HS register map and reset values (continued)

Offset	Register	31	30	29	28	27	26	25	24	23	22	21	20	19	18	17	16	15	14	13	12	11	10	9	8	7	6	5	4	3	2	1	0
0x82C	OTG_HS_DVBUSPULSE	Reserved																					DVBUSP										
	Reset value																					0	1	0	1	1	0	1	1	1	0	0	0
0x830	OTG_HS_DTHRCTL	Reserved				ARPEN	Reserved	RXTHRLEN									RXTHREN	Reserved					TXTHRLEN									ISOTHREN	NONISOTHREN
	Reset value					0		0	0	0	0	0	0	0	0	0	0						0	0	0	0	0	0	0	0	0	0	0
0x834	OTG_HS_DIEPEMPMSK	Reserved																INEPTXFEM															
	Reset value																	0	0	0	0	0	0	0	0	0	0	0	0	0	0	0	0
0x838	OTG_HS_DEACHINT	Reserved															Reserved																Reserved
	Reset value															0																0	
0x83C	OTG_HS_DEACHINTMSK	Reserved															Reserved																Reserved
	Reset value															0																0	
0x844	OTG_HS_DIEPEACHMSK1	Reserved																		NAKM	Reserved		BIM	TXFURM	Reserved	INEPNEM	INEPNMM	ITTXFEMSK	TOM	AHBERRM	EPDM	XFRCM
	Reset value																			0			0	0		0	0	0	0	0	0	0
0x884	OTG_HS_DOEPEACHMSK1	Reserved																	NYETM	NAKM	BERRM	Reserved	BIM	TXFURM	Reserved	INEPNEM	INEPNMM	ITTXFEMSK	TOM	AHBERRM	EPDM	XFRCM
	Reset value																		0	0	0		0	0		0	0	0	0	0	0	0
0x900	OTG_HS_DIEPCTL0	EPENA	EPDIS	SODDFRM	SD0PID/SEVNFRM	SNAK	CNAK	TXFNUM				STALL	Reserved	EPTYP		NAKSTS	EONUM/DPID	USBAEP	Reserved				MPSIZ										
	Reset value	0	0	0	0	0	0	0	0	0	0	0		0	0	0	0	0					0	0	0	0	0	0	0	0	0	0	0
0x918	TG_FS_DTXFSTS0	Reserved																INEPTFSAV															
	Reset value																	0	0	0	0	0	0	1	0	0	0	0	0	0	0	0	0
0x920	OTG_HS_DIEPCTL1	EPENA	EPDIS	SODDFRM	SD0PID/SEVNFRM	SNAK	CNAK	TXFNUM				Stall	Reserved	EPTYP		NAKSTS	EONUM/DPID	USBAEP	Reserved				MPSIZ										
	Reset value	0	0	0	0	0	0	0	0	0	0	0		0	0	0	0	0					0	0	0	0	0	0	0	0	0	0	0
0x938	TG_FS_DTXFSTS1	Reserved																INEPTFSAV															
	Reset value																	0	0	0	0	0	0	1	0	0	0	0	0	0	0	0	0

Table 215. OTG_HS register map and reset values (continued)

Offset	Register	31	30	29	28	27	26	25	24	23	22	21	20	19	18	17	16	15	14	13	12	11	10	9	8	7	6	5	4	3	2	1	0
0x940	OTG_HS_DIEPCTL2	EPENA	EPDIS	SODDFRM	SD0PID/SEVNFRM	SNAK	CNAK	TXFNUM				Stall	Reserved	EPTYP		NAKSTS	EONUM/DPID	USBAEP	Reserved				MPSIZ										
	Reset value	0	0	0	0	0	0	0	0	0	0	0		0	0	0	0	0					0	0	0	0	0	0	0	0	0	0	0
0x958	TG_FS_DTXFSTS2	Reserved																INEPTFSAV															
	Reset value																	0	0	0	0	0	0	1	0	0	0	0	0	0	0	0	0
0x960	OTG_HS_DIEPCTL3	EPENA	EPDIS	SODDFRM	SD0PID/SEVNFRM	SNAK	CNAK	TXFNUM				Stall	Reserved	EPTYP		NAKSTS	EONUM/DPID	USBAEP	Reserved				MPSIZ										
	Reset value	0	0	0	0	0	0	0	0	0	0	0		0	0	0	0	0					0	0	0	0	0	0	0	0	0	0	0
0x978	TG_FS_DTXFSTS3	Reserved																INEPTFSAV															
	Reset value																	0	0	0	0	0	0	1	0	0	0	0	0	0	0	0	0
0x980	OTG_HS_DIEPCTL4	EPENA	EPDIS	SODDFRM	SD0PID/SEVNFRM	SNAK	CNAK	TXFNUM				Stall	Reserved	EPTYP		NAKSTS	EONUM/DPID	USBAEP	Reserved				MPSIZ										
	Reset value	0	0	0	0	0	0	0	0	0	0	0		0	0	0	0	0					0	0	0	0	0	0	0	0	0	0	0
0x9A0	OTG_HS_DIEPCTL5	EPENA	EPDIS	SODDFRM	SD0PID/SEVNFRM	SNAK	CNAK	TXFNUM				STALL	Reserved	EPTYP		NAKSTS	EONUM/DPID	USBAEP	Reserved				MPSIZ										
	Reset value	0	0	0	0	0	0	0	0	0	0	0		0	0	0	0	0					0	0	0	0	0	0	0	0	0	0	0
0x9C0	OTG_HS_DIEPCTL6	EPENA	EPDIS	SODDFRM	SD0PID/SEVNFRM	SNAK	CNAK	TXFNUM				STALL	Reserved	EPTYP		NAKSTS	EONUM/DPID	USBAEP	Reserved				MPSIZ										
	Reset value	0	0	0	0	0	0	0	0	0	0	0		0	0	0	0	0					0	0	0	0	0	0	0	0	0	0	0
0x9E0	OTG_HS_DIEPCTL7	EPENA	EPDIS	SODDFRM	SD0PID/SEVNFRM	SNAK	CNAK	TXFNUM				STALL	Reserved	EPTYP		NAKSTS	EONUM/DPID	USBAEP	Reserved				MPSIZ										
	Reset value	0	0	0	0	0	0	0	0	0	0	0		0	0	0	0	0					0	0	0	0	0	0	0	0	0	0	0
0xB00	OTG_HS_DOEPCTL0	EPENA	EPDIS	Reserved		SNAK	CNAK	Reserved				STALL	SNPM	EPTYP		NAKSTS	Reserved	USBAEP	Reserved													MPSIZ	
	Reset value	0	0			0	0					0	0	0	0	0		1														0	0

Table 215. OTG_HS register map and reset values (continued)

Offset	Register	31	30	29	28	27	26	25	24	23	22	21	20	19	18	17	16	15	14	13	12	11	10	9	8	7	6	5	4	3	2	1	0
0xB20	OTG_HS_DOEPCTL1	EPENA	EPDIS	SODDFRM	SD0PID/SEVNFRM	SNAK	CNAK	Reserved				STALL	SNPM	EPTYP		NAKSTS	EONUM/DPID	USBAEP	Reserved				MPSIZ										
	Reset value	0	0	0	0	0	0					0	0	0	0	0	0	0					0	0	0	0	0	0	0	0	0	0	0
0xB40	OTG_HS_DOEPCTL2	EPENA	EPDIS	SODDFRM	SD0PID/SEVNFRM	SNAK	CNAK	Reserved				Stall	SNPM	EPTYP		NAKSTS	EONUM/DPID	USBAEP	Reserved				MPSIZ										
	Reset value	0	0	0	0	0	0					0	0	0	0	0	0	0					0	0	0	0	0	0	0	0	0	0	0
0xB60	OTG_HS_DOEPCTL3	EPENA	EPDIS	SODDFRM	SD0PID/SEVNFRM	SNAK	CNAK	Reserved				Stall	SNPM	EPTYP		NAKSTS	EONUM/DPID	USBAEP	Reserved				MPSIZ										
	Reset value	0	0	0	0	0	0					0	0	0	0	0	0	0					0	0	0	0	0	0	0	0	0	0	0
0x908	OTG_HS_DIEPINT0	Reserved																		NAK	Reserved	PKTDRPSTS	Reserved		TXFIFOUDRN	TXFE	INEPNE	INEPNM	ITTXFE	TOC	AHBERR	EPDISD	XFRC
	Reset value																			0		0			0	1	0	0	0	0	0	0	0
0x928	OTG_HS_DIEPINT1	Reserved																		NAK	Reserved	PKTDRPSTS	Reserved		TXFIFOUDRN	TXFE	INEPNE	INEPNM	ITTXFE	TOC	AHBERR	EPDISD	XFRC
	Reset value																			0		0			0	1	0	0	0	0	0	0	0
0x948	OTG_HS_DIEPINT2	Reserved																		NAK	BERR	PKTDRPSTS	Reserved		TXFIFOUDRN	TXFE	INEPNE	INEPNM	ITTXFE	TOC	AHBERR	EPDISD	XFRC
	Reset value																			0		0			0	1	0	0	0	0	0	0	0
0x968	OTG_HS_DIEPINT3	Reserved																		NAK	Reserved	PKTDRPSTS	Reserved		TXFIFOUDRN	TXFE	INEPNE	INEPNM	ITTXFE	TOC	AHBERR	EPDISD	XFRC
	Reset value																			0	0	0			0	1	0	0	0	0	0	0	0
0x988	OTG_HS_DIEPINT4	Reserved																		NAK	Reserved	PKTDRPSTS	Reserved		TXFIFOUDRN	TXFE	INEPNE	INEPNM	ITTXFE	TOC	AHBERR	EPDISD	XFRC
	Reset value																			0		0			0	1	0	0	0	0	0	0	0

Table 215. OTG_HS register map and reset values (continued)

Offset	Register	31	30	29	28	27	26	25	24	23	22	21	20	19	18	17	16	15	14	13	12	11	10	9	8	7	6	5	4	3	2	1	0
0x9A8	OTG_HS_DIEPINT5	Reserved																		NAK	Reserved	PKTDRPSTS	Reserved		TXFIFOUDRN	TXFE	INEPNE	INEPNM	ITTXFE	TOC	AHBERR	EPDISD	XFRC
	Reset value																			0		0			0	1	0	0	0	0	0	0	0
0x9C8	OTG_HS_DIEPINT6	Reserved																		NAK	Reserved	PKTDRPSTS	Reserved		TXFIFOUDRN	TXFE	INEPNE	INEPNM	ITTXFE	TOC	AHBERR	EPDISD	XFRC
	Reset value																			0		0			0	1	0	0	0	0	0	0	0
0x9E8	OTG_HS_DIEPINT7	Reserved																		NAK	Reserved	PKTDRPSTS	Reserved		TXFIFOUDRN	TXFE	INEPNE	INEPNM	ITTXFE	TOC	AHBERR	EPDISD	XFRC
	Reset value																			0		0			0	1	0	0	0	0	0	0	0
0xB08	OTG_HS_DOEPINT0	Reserved																	NYET	NAK	BERR	Reserved			OUTPKTERR	Reserved	B2BSTUP	Reserved	OTEPDIS	STUP	AHBERR	EPDISD	XFRC
	Reset value																		0	0	0				0		0		0	1	0	0	0
0xB28	OTG_HS_DOEPINT1	Reserved																	NYET	NAK	BERR	Reserved			OUTPKTERR	Reserved	B2BSTUP	Reserved	OTEPDIS	STUP	AHBERR	EPDISD	XFRC
	Reset value																		0	0	0				0		0		0	0	0	0	0
0xB48	OTG_HS_DOEPINT2	Reserved																	NYET	NAK	BERR	Reserved			OUTPKTERR	Reserved	B2BSTUP	Reserved	OTEPDIS	STUP	AHBERR	EPDISD	XFRC
	Reset value																		0	0	0				0		0		0	0	0	0	0
0xB68	OTG_HS_DOEPINT3	Reserved																	NYET	NAK	BERR	Reserved			OUTPKTERR	Reserved	B2BSTUP	Reserved	OTEPDIS	STUP	AHBERR	EPDISD	XFRC
	Reset value																		0	0	0				0		0		0	0	0	0	0
0xB88	OTG_HS_DOEPINT4	Reserved																	NYET	NAK	BERR	Reserved			OUTPKTERR	Reserved	B2BSTUP	Reserved	OTEPDIS	STUP	AHBERR	EPDISD	XFRC
	Reset value																		0	0	0				0		0		0	0	0	0	0
0xBA8	OTG_HS_DOEPINT5	Reserved																	NYET	NAK	BERR	Reserved			OUTPKTERR	Reserved	B2BSTUP	Reserved	OTEPDIS	STUP	AHBERR	EPDISD	XFRC
	Reset value																		0	0	0				0		0		0	0	0	0	0

Table 215. OTG_HS register map and reset values (continued)

Offset	Register	31	30	29	28	27	26	25	24	23	22	21	20	19	18	17	16	15	14	13	12	11	10	9	8	7	6	5	4	3	2	1	0
0xBC8	OTG_HS_DOEPINT6	Reserved																	NYET	NAK	BERR	Reserved			OUTPKTERR	Reserved	B2BSTUP	Reserved	OTEPDIS	STUP	AHBERR	EPDISD	XFRC
	Reset value																		0	0	0				0		0		0	0	0	0	0
0xBE8	OTG_HS_DOEPINT7	Reserved																	NYET	NAK	BERR	Reserved			OUTPKTERR	Reserved	B2BSTUP	Reserved	OTEPDIS	STUP	AHBERR	EPDISD	XFRC
	Reset value																		0	0	0				0		0		0	0	0	0	0
0x910	OTG_HS_DIEPTSIZ0	Reserved											PKTCNT		Reserved												XFRSIZ						
	Reset value												0	0													0	0	0	0	0	0	0
0x930	OTG_HS_DIEPTSIZ1	Reserved	MCNT		PKTCNT										XFRSIZ																		
	Reset value		0	0	0	0	0	0	0	0	0	0	0	0	0	0	0	0	0	0	0	0	0	0	0	0	0	0	0	0	0	0	0
0x934	OTG_HS_DIEPDMA1	DMAADDR																															
	Reset value		0	0	0	0	0	0	0	0	0	0	0	0	0	0	0	0	0	0	0	0	0	0	0	0	0	0	0	0	0	0	0
0x93C	OTG_HS_DIEPDMAB1	DMABADDR																															
	Reset value	0	0	0	0	0	0	0	0	0	0	0	0	0	0	0	0	0	0	0	0	0	0	0	0	0	0	0	0	0	0	0	0
0x950	OTG_HS_DIEPTSIZ2	Reserved	MCNT		PKTCNT										XFRSIZ																		
	Reset value		0	0	0	0	0	0	0	0	0	0	0	0	0	0	0	0	0	0	0	0	0	0	0	0	0	0	0	0	0	0	0
0x954	OTG_HS_DIEPDMA2	DMAADDR																															
	Reset value	0	0	0	0	0	0	0	0	0	0	0	0	0	0	0	0	0	0	0	0	0	0	0	0	0	0	0	0	0	0	0	0
0x95C	OTG_HS_DIEPDMAB2	DMABADDR																															
	Reset value	0	0	0	0	0	0	0	0	0	0	0	0	0	0	0	0	0	0	0	0	0	0	0	0	0	0	0	0	0	0	0	0
0x970	OTG_HS_DIEPTSIZ3	Reserved	MCNT		PKTCNT										XFRSIZ																		
	Reset value		0	0	0	0	0	0	0	0	0	0	0	0	0	0	0	0	0	0	0	0	0	0	0	0	0	0	0	0	0	0	0
0x974	OTG_HS_DIEPDMA3	DMAADDR																															
	Reset value	0	0	0	0	0	0	0	0	0	0	0	0	0	0	0	0	0	0	0	0	0	0	0	0	0	0	0	0	0	0	0	0
0x97C	OTG_HS_DIEPDMAB3	DMABADDR																															
	Reset value	0	0	0	0	0	0	0	0	0	0	0	0	0	0	0	0	0	0	0	0	0	0	0	0	0	0	0	0	0	0	0	0
0xB10	OTG_HS_DOEPTSIZ0	Reserved	STUPCNT		Reserved									PKTCNT	Reserved												XFRSIZ						
	Reset value		0	0										0													0	0	0	0	0	0	0
0xB30	OTG_HS_DOEPTSIZ1	Reserved	RXDPID/STUPCNT		PKTCNT										XFRSIZ																		
	Reset value		0	0	0	0	0	0	0	0	0	0	0	0	0	0	0	0	0	0	0	0	0	0	0	0	0	0	0	0	0	0	0
0xB34	OTG_HS_DOEPDMA1	DMAADDR																															
	Reset value	0	0	0	0	0	0	0	0	0	0	0	0	0	0	0	0	0	0	0	0	0	0	0	0	0	0	0	0	0	0	0	0

Table 215. OTG_HS register map and reset values (continued)

Offset	Register	31	30	29	28	27	26	25	24	23	22	21	20	19	18	17	16	15	14	13	12	11	10	9	8	7	6	5	4	3	2	1	0
0xB3C	OTG_HS_DOEPDMAB1	DMABADDR																															
	Reset value	0	0	0	0	0	0	0	0	0	0	0	0	0	0	0	0	0	0	0	0	0	0	0	0	0	0	0	0	0	0	0	0
0xB50	OTG_HS_DOEPTSIZ2	Reserved	RXDPID/STUPCNT		PKTCNT										XFRSIZ																		
	Reset value		0	0	0	0	0	0	0	0	0	0	0	0	0	0	0	0	0	0	0	0	0	0	0	0	0	0	0	0	0	0	0
0xB54	OTG_HS_DOEPDMA2	DMAADDR																															
	Reset value	0	0	0	0	0	0	0	0	0	0	0	0	0	0	0	0	0	0	0	0	0	0	0	0	0	0	0	0	0	0	0	0
0xB5C	OTG_HS_DOEPDMAB2	DMABADDR																															
	Reset value	0	0	0	0	0	0	0	0	0	0	0	0	0	0	0	0	0	0	0	0	0	0	0	0	0	0	0	0	0	0	0	0
0xB70	OTG_HS_DOEPTSIZ3	Reserved	RXDPID/STUPCNT		PKTCNT										XFRSIZ																		
	Reset value		0	0	0	0	0	0	0	0	0	0	0	0	0	0	0	0	0	0	0	0	0	0	0	0	0	0	0	0	0	0	0
0xB74	OTG_HS_DOEPDMA3	DMAADDR																															
	Reset value	0	0	0	0	0	0	0	0	0	0	0	0	0	0	0	0	0	0	0	0	0	0	0	0	0	0	0	0	0	0	0	0
0xB7C	OTG_HS_DOEPDMAB3	DMABADDR																															
	Reset value	0	0	0	0	0	0	0	0	0	0	0	0	0	0	0	0	0	0	0	0	0	0	0	0	0	0	0	0	0	0	0	0
0xE00	OTG_HS_PCGCCTL	Reserved																											PHYSUSP	Reserved		GATEHCLK	STPPCLK
	Reset value																																

Refer to *Section 2.3: Memory map* for the register boundary addresses.

35.13 OTG_HS programming model

35.13.1 Core initialization

The application must perform the core initialization sequence. If the cable is connected during power-up, the current mode of operation bit in the Core interrupt register (CMOD bit in OTG_HS_GINTSTS) reflects the mode. The OTG_HS controller enters host mode when an “A” plug is connected or peripheral mode when a “B” plug is connected.

This section explains the initialization of the OTG_HS controller after power-on. The application must follow the initialization sequence irrespective of host or peripheral mode operation. All core global registers are initialized according to the core’s configuration:

1. Program the following fields in the Global AHB configuration (OTG_HS_GAHBCFG) register:
   - DMA mode bit
   - AHB burst length field
   - Global interrupt mask bit GINT = 1
   - RxFIFO nonempty (RXFLVL bit in OTG_HS_GINTSTS)
   - Periodic TxFIFO empty level
2. Program the following fields in OTG_HS_GUSBCFG register:
   - HNP capable bit
   - SRP capable bit
   - FS timeout calibration field
   - USB turnaround time field
3. The software must unmask the following bits in the GINTMSK register:

   OTG interrupt mask

   Mode mismatch interrupt mask
4. The software can read the CMOD bit in OTG_HS_GINTSTS to determine whether the OTG_HS controller is operating in host or peripheral mode.

35.13.2 Host initialization

To initialize the core as host, the application must perform the following steps:

1. Program the HPRTINT in GINTMSK to unmask
2. Program the OTG_HS_HCFG register to select full-speed host
3. Program the PPWR bit in OTG_HS_HPRT to 1. This drives V_{BUS} on the USB.
4. Wait for the PCDET interrupt in OTG_HS_HPRT0. This indicates that a device is connecting to the port.
5. Program the PRST bit in OTG_HS_HPRT to 1. This starts the reset process.
6. Wait at least 10 ms for the reset process to complete.
7. Program the PRST bit in OTG_HS_HPRT to 0.
8. Wait for the PENCHNG interrupt in OTG_HS_HPRT.
9. Read the PSPD bit in OTG_HS_HPRT to get the enumerated speed.
10. Program the HFIR register with a value corresponding to the selected PHY clock 1.
11. Program the FSLSPCS field in OTG_FS_HCFG register according to the speed of the detected device read in step 9. If FSLSPCS has been changed, reset the port.
12. Program the OTG_HS_GRXFSIZ register to select the size of the receive FIFO.
13. Program the OTG_HS_GNPTXFSIZ register to select the size and the start address of the nonperiodic transmit FIFO for nonperiodic transactions.
14. Program the OTG_HS_HPTXFSIZ register to select the size and start address of the periodic transmit FIFO for periodic transactions.

To communicate with devices, the system software must initialize and enable at least one channel.

35.13.3 Device initialization

The application must perform the following steps to initialize the core as a device on power-up or after a mode change from host to device.

1. Program the following fields in the OTG_HS_DCFG register:
   - Device speed
   - Nonzero-length status OUT handshake
2. Program the OTG_HS_GINTMSK register to unmask the following interrupts:
   - USB reset
   - Enumeration done
   - Early suspend
   - USB suspend
   - SOF
3. Program the VBUSBSEN bit in the OTG_HS_GCCFG register to enable V_{BUS} sensing in “B” peripheral mode and supply the 5 volts across the pull-up resistor on the DP line.
4. Wait for the USBRST interrupt in OTG_HS_GINTSTS. It indicates that a reset has been detected on the USB that lasts for about 10 ms on receiving this interrupt.

Wait for the ENUMDNE interrupt in OTG_HS_GINTSTS. This interrupt indicates the end of reset on the USB. On receiving this interrupt, the application must read the OTG_HS_DSTS register to determine the enumeration speed and perform the steps listed in *Endpoint initialization on enumeration completion on page 1516*.

At this point, the device is ready to accept SOF packets and perform control transfers on control endpoint 0.

35.13.4 DMA mode

The OTG host uses the AHB master interface to fetch the transmit packet data (AHB to USB) and receive the data update (USB to AHB). The AHB master uses the programmed DMA address (HCDMAx register in host mode and DIEPDMAx/DOEPDMAx register in peripheral mode) to access the data buffers.

35.13.5 Host programming model

Channel initialization

The application must initialize one or more channels before it can communicate with connected devices. To initialize and enable a channel, the application must perform the following steps:

1. Program the GINTMSK register to unmask the following:
2. Channel interrupt
   – Nonperiodic transmit FIFO empty for OUT transactions (applicable for Slave mode that operates in pipelined transaction-level with the packet count field programmed with more than one).
   – Nonperiodic transmit FIFO half-empty for OUT transactions (applicable for Slave mode that operates in pipelined transaction-level with the packet count field programmed with more than one).
3. Program the OTG_HS_HAINTMSK register to unmask the selected channels' interrupts.
4. Program the OTG_HS_HCINTMSK register to unmask the transaction-related interrupts of interest given in the host channel interrupt register.
5. Program the selected channel's OTG_HS_HCTSIZx register with the total transfer size, in bytes, and the expected number of packets, including short packets. The application must program the PID field with the initial data PID (to be used on the first OUT transaction or to be expected from the first IN transaction).
6. Program the selected channels in the OTG_HS_HCSPLTx register(s) with the hub and port addresses (split transactions only).
7. Program the selected channels in the HCDMAx register(s) with the buffer start address.
8. Program the OTG_HS_HCCHARx register of the selected channel with the device's endpoint characteristics, such as type, speed, direction, and so forth. (The channel can be enabled by setting the channel enable bit to 1 only when the application is ready to transmit or receive any packet).

Halting a channel

The application can disable any channel by programming the OTG_HS_HCCHARx register with the CHDIS and CHENA bits set to 1. This enables the OTG_HS host to flush the posted requests (if any) and generates a channel halted interrupt. The application must wait for the CHH interrupt in OTG_HS_HCINTx before reallocating the channel for other transactions. The OTG_HS host does not interrupt the transaction that has already been started on the USB.

To disable a channel in DMA mode operation, the application does not need to check for space in the request queue. The OTG_HS host checks for space to write the disable request on the disabled channel's turn during arbitration. Meanwhile, all posted requests are dropped from the request queue when the CHDIS bit in HCCHARx is set to 1.

Before disabling a channel, the application must ensure that there is at least one free space available in the nonperiodic request queue (when disabling a nonperiodic channel) or the periodic request queue (when disabling a periodic channel). The application can simply flush the posted requests when the Request queue is full (before disabling the channel), by programming the OTG_HS_HCCHARx register with the CHDIS bit set to 1, and the CHENA bit cleared to 0.

The application is expected to disable a channel on any of the following conditions:

1. When an XFRC interrupt in OTG_HS_HCINTx is received during a nonperiodic IN transfer or high-bandwidth interrupt IN transfer (Slave mode only)
2. When an STALL, TXERR, BBERR or DTERR interrupt in OTG_HS_HCINTx is received for an IN or OUT channel (Slave mode only). For high-bandwidth interrupt INs in Slave mode, once the application has received a DTERR interrupt it must disable the

channel and wait for a channel halted interrupt. The application must be able to receive other interrupts (DTERR, NAK, Data, TXERR) for the same channel before receiving the halt.

3. When a DISCINT (Disconnect Device) interrupt in OTG_HS_GINTSTS is received. (The application is expected to disable all enabled channels
4. When the application aborts a transfer before normal completion.

Ping protocol

When the OTG_HS host operates in high speed, the application must initiate the ping protocol when communicating with high-speed bulk or control (data and status stage) OUT endpoints.

The application must initiate the ping protocol when it receives a NAK/NYET/TXERR interrupt. When the HS_OTG host receives one of the above responses, it does not continue any transaction for a specific endpoint, drops all posted or fetched OUT requests (from the request queue), and flushes the corresponding data (from the transmit FIFO).

This is valid in slave mode only. In Slave mode, the application can send a ping token either by setting the DOPING bit in HCTSIZx before enabling the channel or by just writing the HCTSIZx register with the DOPING bit set when the channel is already enabled. This enables the HS_OTG host to write a ping request entry to the request queue. The application must wait for the response to the ping token (a NAK, ACK, or TXERR interrupt) before continuing the transaction or sending another ping token. The application can continue the data transaction only after receiving an ACK from the OUT endpoint for the requested ping. In DMA mode operation, the application does not need to set the DOPING bit in HCTSIZx for a NAK/NYET response in case of Bulk/Control OUT. The OTG_HS host automatically sets the DOPING bit in HCTSIZx, and issues the ping tokens for Bulk/Control OUT. The HS_OTG host continues sending ping tokens until it receives an ACK, and then switches automatically to the data transaction.

Operational model

The application must initialize a channel before communicating to the connected device. This section explains the sequence of operation to be performed for different types of USB transactions.

- **Writing the transmit FIFO**

The OTG_HS host automatically writes an entry (OUT request) to the periodic/nonperiodic request queue, along with the last word write of a packet. The application must ensure that at least one free space is available in the periodic/nonperiodic request queue before starting to write to the transmit FIFO. The application must always write to the transmit FIFO in words. If the packet size is non-word-aligned, the application must use padding. The OTG_HS host determines the actual packet size based on the programmed maximum packet size and transfer size.

Figure 416. Transmit FIFO write task

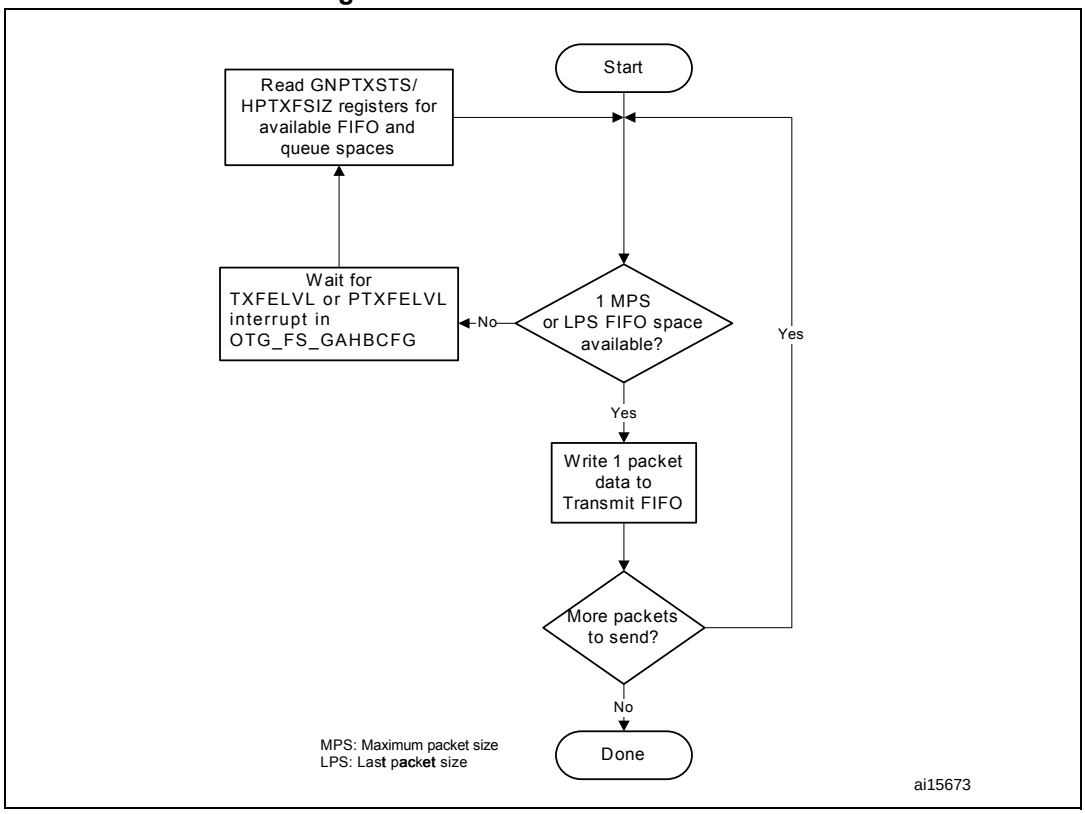

- **Reading the receive FIFO**

The application must ignore all packet statuses other than IN data packet (bx0010).

Figure 417. Receive FIFO read task

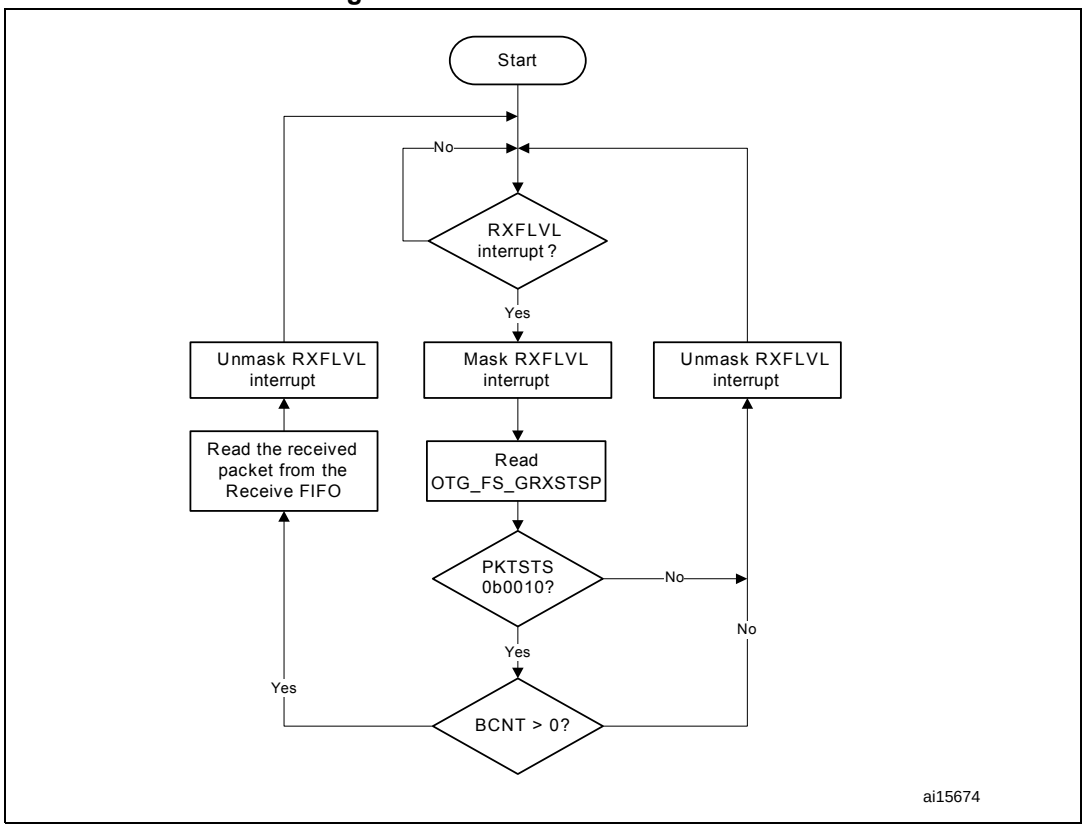

- **Bulk and control OUT/SETUP transactions**

  A typical bulk or control OUT/SETUP pipelined transaction-level operation is shown in *Figure 418*. See channel 1 (ch_1). Two bulk OUT packets are transmitted. A control SETUP transaction operates in the same way but has only one packet. The assumptions are:

  – The application is attempting to send two maximum-packet-size packets (transfer size = 1, 024 bytes).

  – The nonperiodic transmit FIFO can hold two packets (128 bytes for FS).

  – The nonperiodic request queue depth = 4.

- **Normal bulk and control OUT/SETUP operations**

  The sequence of operations for channel 1 is as follows:

  a) Initialize channel 1

  b) Write the first packet for channel 1

  c) Along with the last word write, the core writes an entry to the nonperiodic request queue

  d) As soon as the nonperiodic queue becomes nonempty, the core attempts to send an OUT token in the current frame

  e) Write the second (last) packet for channel 1

  f) The core generates the XFRC interrupt as soon as the last transaction is completed successfully

  g) In response to the XFRC interrupt, de-allocate the channel for other transfers

  h) Handling nonACK responses

Figure 418. Normal bulk/control OUT/SETUP and bulk/control IN transactions - DMA mode

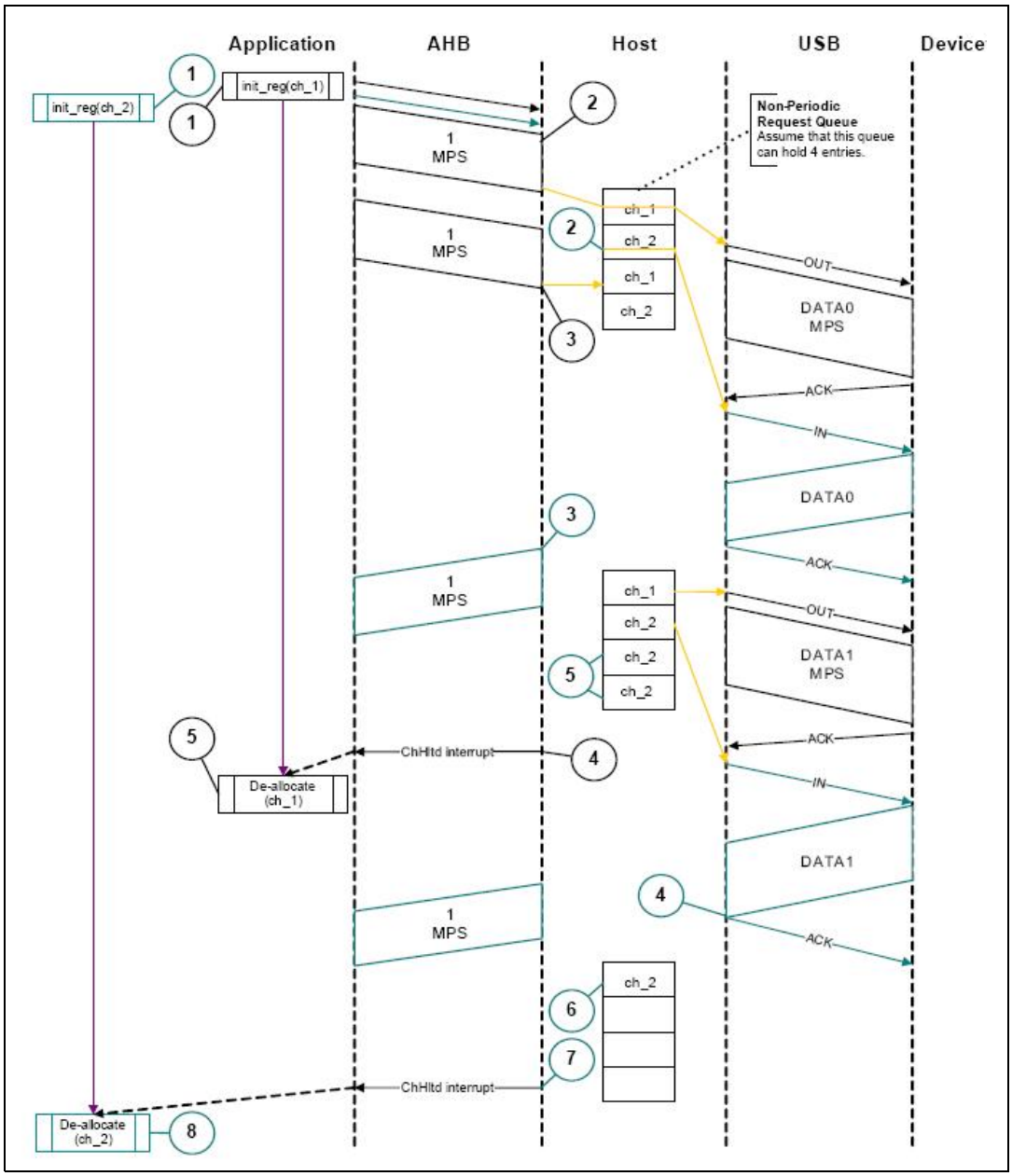

Figure 419. Normal bulk/control OUT/SETUP and bulk/control IN transactions - Slave mode

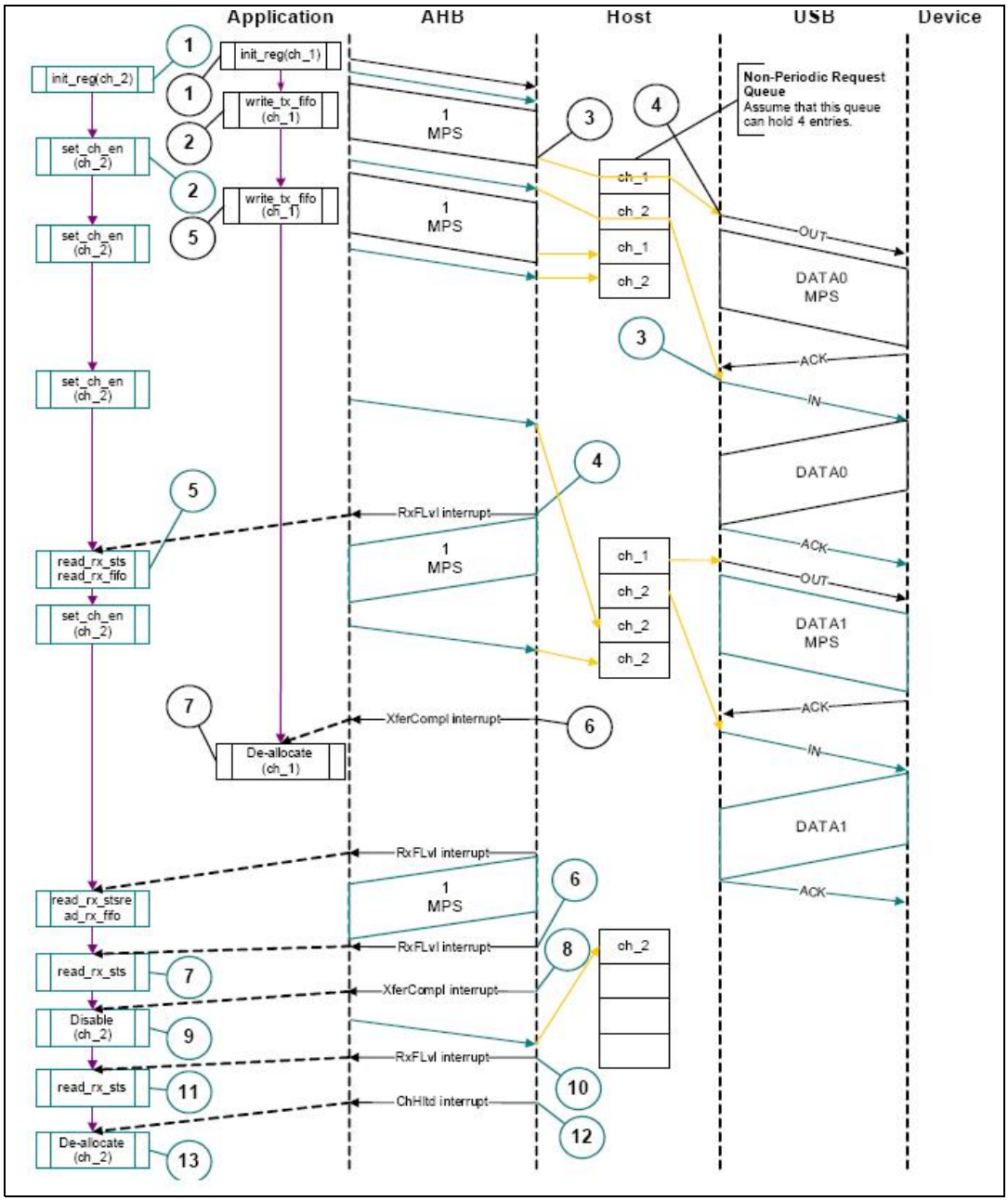

The channel-specific interrupt service routine for bulk and control OUT/SETUP transactions in Slave mode is shown in the following code samples.

- **Interrupt service routine for bulk/control OUT/SETUP and bulk/control IN transactions**

  a) Bulk/Control OUT/SETUP

```
Unmask (NAK/TXERR/STALL/XFRC)
if (XFRC)
  {
  Reset Error Count
```

```
      Mask ACK
      De-allocate Channel
      }
   else if (STALL)
      {
      Transfer Done = 1
      Unmask CHH
      Disable Channel
      }
   else if (NAK or TXERR )
      {
      Rewind Buffer Pointers
      Unmask CHH
      Disable Channel
      if (TXERR)
         {
         Increment Error Count
         Unmask ACK
         }
      else
         {
         Reset Error Count
         }
         }
   else if (CHH)
      {
      Mask CHH
      if (Transfer Done or (Error_count == 3))
         {
         De-allocate Channel
         }
      else
         {
         Re-initialize Channel
         }
      }
      else if (ACK)
         {
         Reset Error Count
         Mask ACK
         }
```

The application is expected to write the data packets into the transmit FIFO as and when the space is available in the transmit FIFO and the Request queue. The application can make use of the NPTXFE interrupt in OTG_HS_GINTSTS to find the transmit FIFO space.

b) Bulk/Control IN

```
Unmask (TXERR/XFRC/BBERR/STALL/DTERR)
if (XFRC)
   {
   Reset Error Count
   Unmask CHH
   Disable Channel
```

```
   Reset Error Count
   Mask ACK
   }
else if (TXERR or BBERR or STALL)
   {
   Unmask CHH
   Disable Channel
   if (TXERR)
      {
      Increment Error Count
      Unmask ACK
      }
   }
else if (CHH)
   {
   Mask CHH
   if (Transfer Done or (Error_count == 3))
      {
      De-allocate Channel
      }
   else
      {
      Re-initialize Channel
      }
   }
else if (ACK)
   {
   Reset Error Count
   Mask ACK
   }
else if (DTERR)
   {
   Reset Error Count
   }
```

The application is expected to write the requests as and when the Request queue space is available and until the XFRC interrupt is received.

- **Bulk and control IN transactions**

  A typical bulk or control IN pipelined transaction-level operation is shown in *Figure 420*. See channel 2 (ch_2). The assumptions are:

  – The application is attempting to receive two maximum-packet-size packets (transfer size = 1 024 bytes).

  – The receive FIFO can contain at least one maximum-packet-size packet and two status words per packet (72 bytes for FS).

  – The nonperiodic request queue depth = 4.

Figure 420. Bulk/control IN transactions - DMA mode

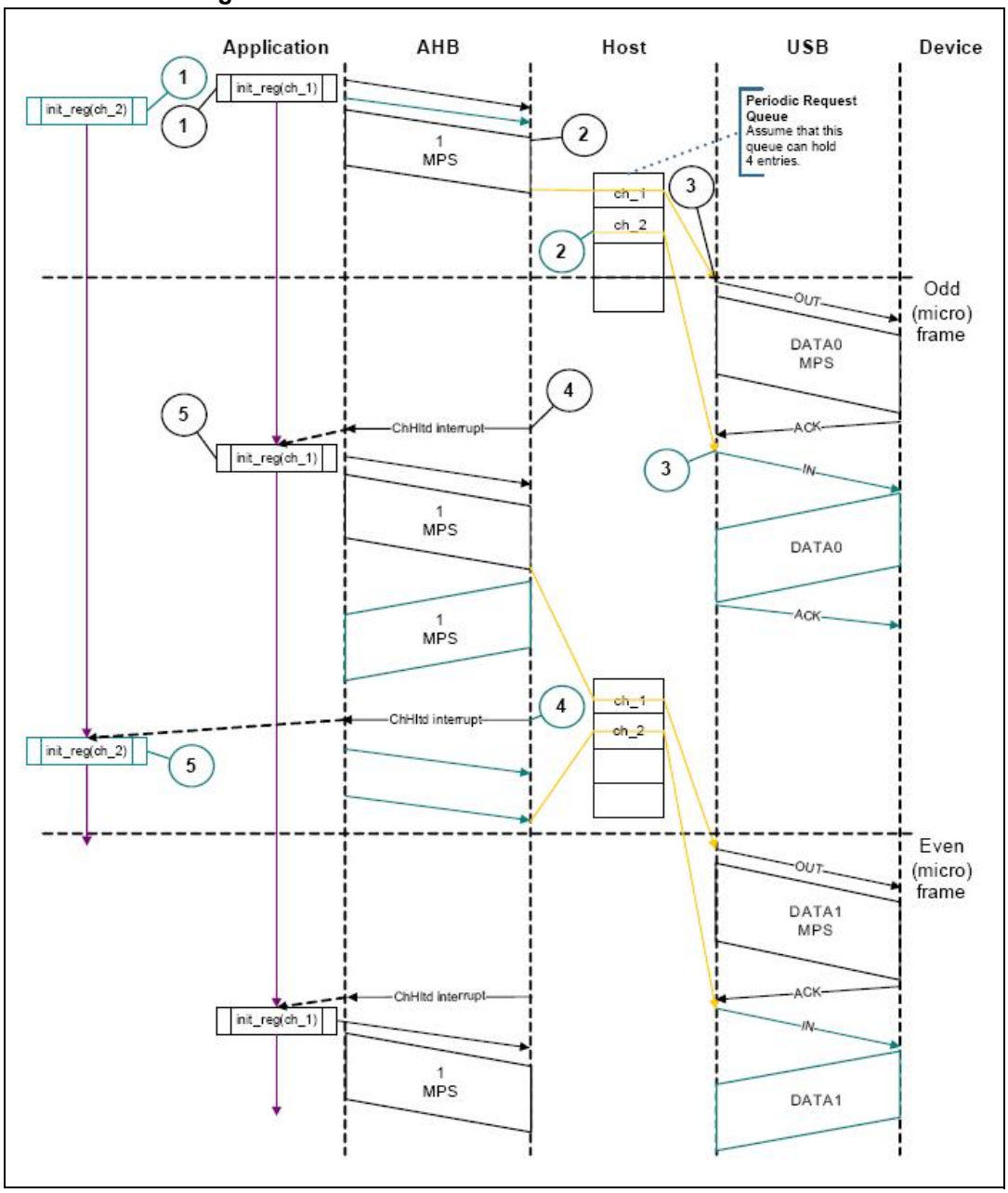

Figure 421. Bulk/control IN transactions - Slave mode

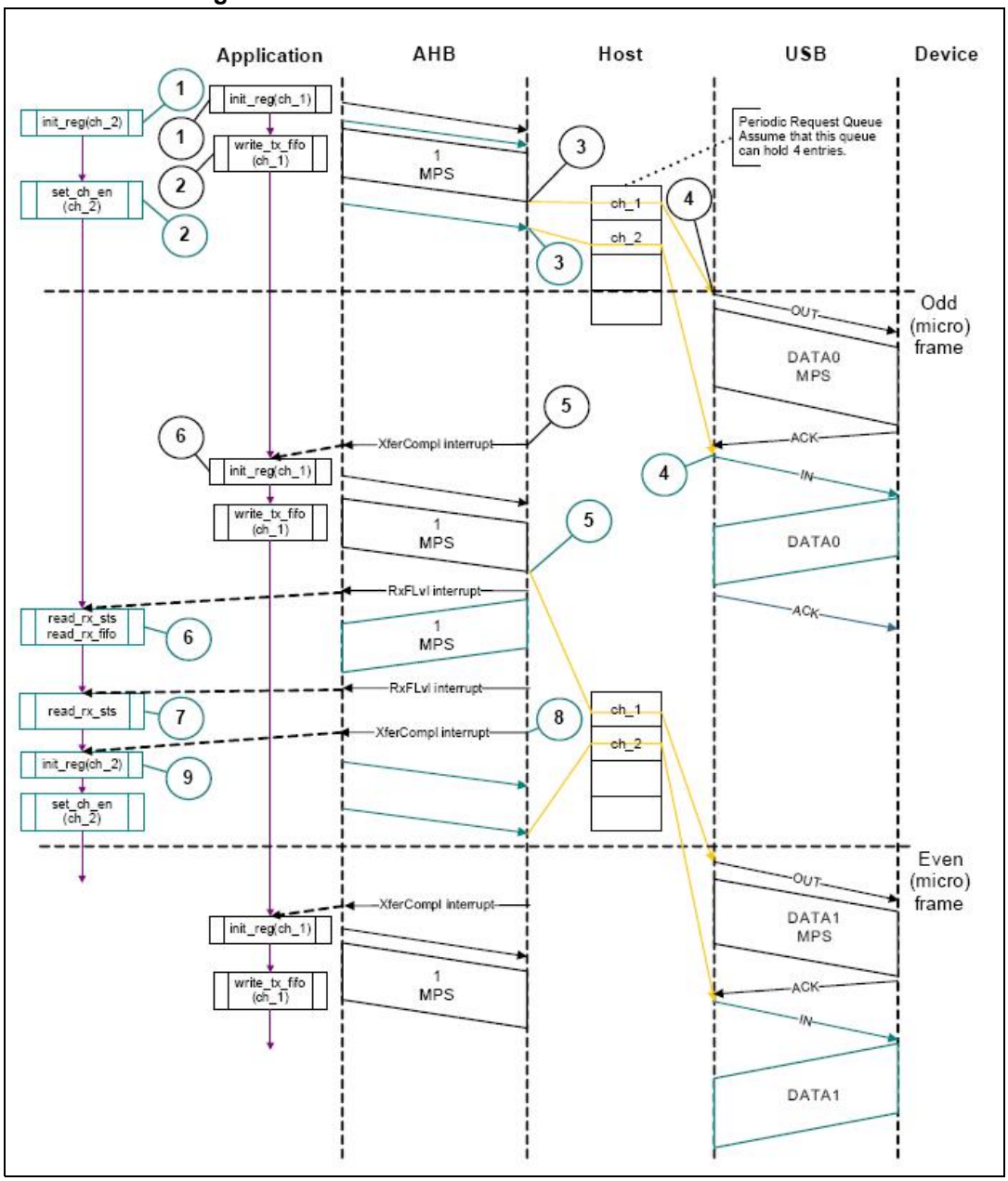

The sequence of operations is as follows:

a) Initialize channel 2.

b) Set the CHENA bit in HCCHAR2 to write an IN request to the nonperiodic request queue.

c) The core attempts to send an IN token after completing the current OUT transaction.

d) The core generates an RXFLVL interrupt as soon as the received packet is written to the receive FIFO.

e) In response to the RXFLVL interrupt, mask the RXFLVL interrupt and read the received packet status to determine the number of bytes received, then read the

receive FIFO accordingly. Following this, unmask the RXFLVL interrupt.

f) The core generates the RXFLVL interrupt for the transfer completion status entry in the receive FIFO.

g) The application must read and ignore the receive packet status when the receive packet status is not an IN data packet (PKTSTS in GRXSTSR ≠ 0b0010).

h) The core generates the XFRC interrupt as soon as the receive packet status is read.

i) In response to the XFRC interrupt, disable the channel and stop writing the OTG_HS_HCCHAR2 register for further requests. The core writes a channel disable request to the nonperiodic request queue as soon as the OTG_HS_HCCHAR2 register is written.

j) The core generates the RXFLVL interrupt as soon as the halt status is written to the receive FIFO.

k) Read and ignore the receive packet status.

l) The core generates a CHH interrupt as soon as the halt status is popped from the receive FIFO.

m) In response to the CHH interrupt, de-allocate the channel for other transfers.

n) Handling nonACK responses

- **Control transactions in slave mode**

  Setup, Data, and Status stages of a control transfer must be performed as three separate transfers. Setup-, Data- or Status-stage OUT transactions are performed similarly to the bulk OUT transactions explained previously. Data- or Status-stage IN transactions are performed similarly to the bulk IN transactions explained previously. For all three stages, the application is expected to set the EPTYP field in OTG_HS_HCCHAR1 to Control. During the Setup stage, the application is expected to set the PID field in OTG_HS_HCTSIZ1 to SETUP.

- **Interrupt OUT transactions**

  A typical interrupt OUT operation in Slave mode is shown in *Figure 422*. The assumptions are:

  – The application is attempting to send one packet in every frame (up to 1 maximum packet size), starting with the odd frame (transfer size = 1 024 bytes)

  – The periodic transmit FIFO can hold one packet (1 KB)

  – Periodic request queue depth = 4

  The sequence of operations is as follows:

  a) Initialize and enable channel 1. The application must set the ODDFRM bit in OTG_HS_HCCHAR1.

  b) Write the first packet for channel 1. For a high-bandwidth interrupt transfer, the application must write the subsequent packets up to MCNT (maximum number of packets to be transmitted in the next frame times) before switching to another channel.

  c) Along with the last word write of each packet, the OTG_HS host writes an entry to the periodic request queue.

  d) The OTG_HS host attempts to send an OUT token in the next (odd) frame.

  e) The OTG_HS host generates an XFRC interrupt as soon as the last packet is transmitted successfully.

  f) In response to the XFRC interrupt, reinitialize the channel for the next transfer.

Figure 422. Normal interrupt OUT/IN transactions - DMA mode

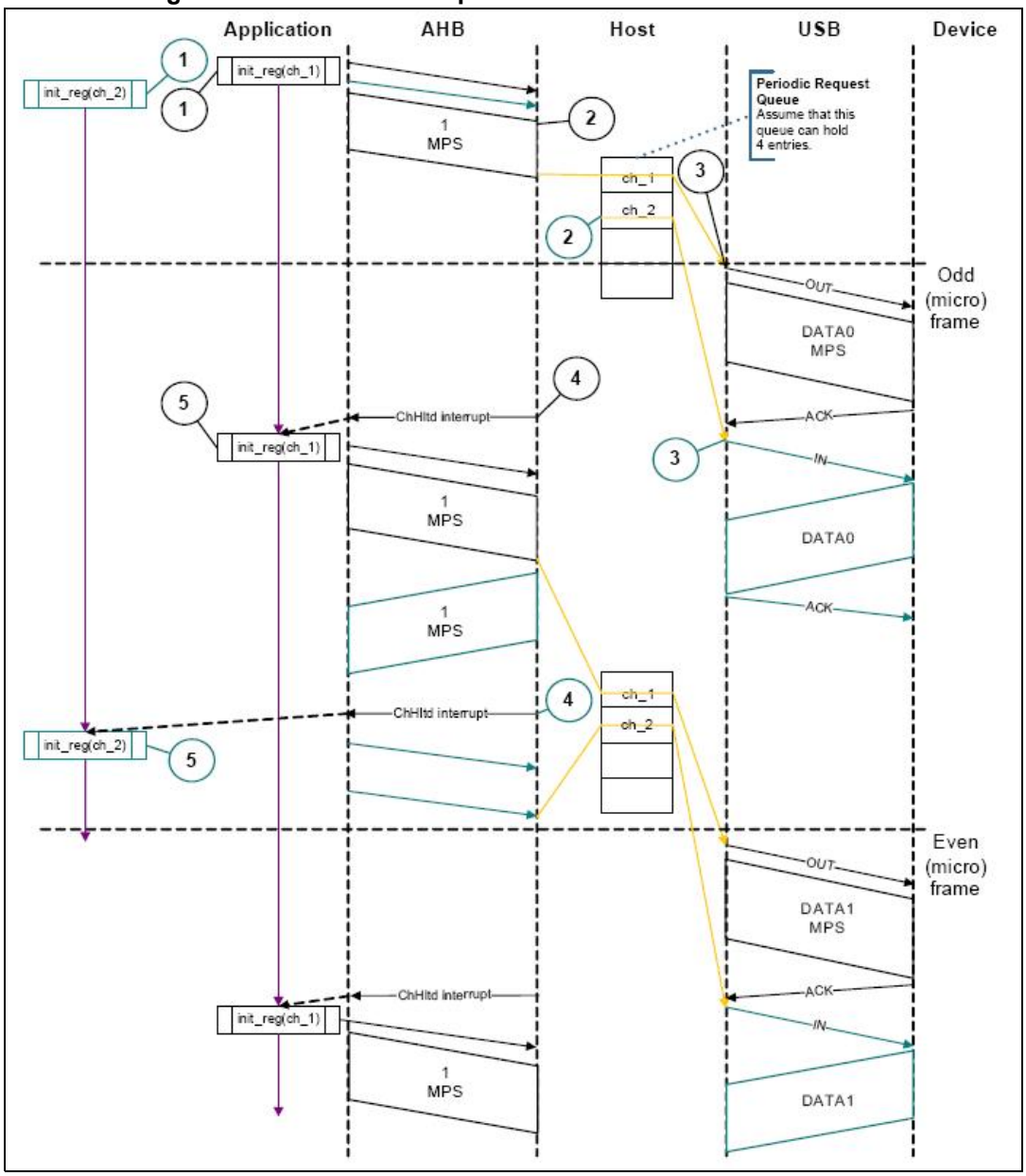

Figure 423. Normal interrupt OUT/IN transactions - Slave mode

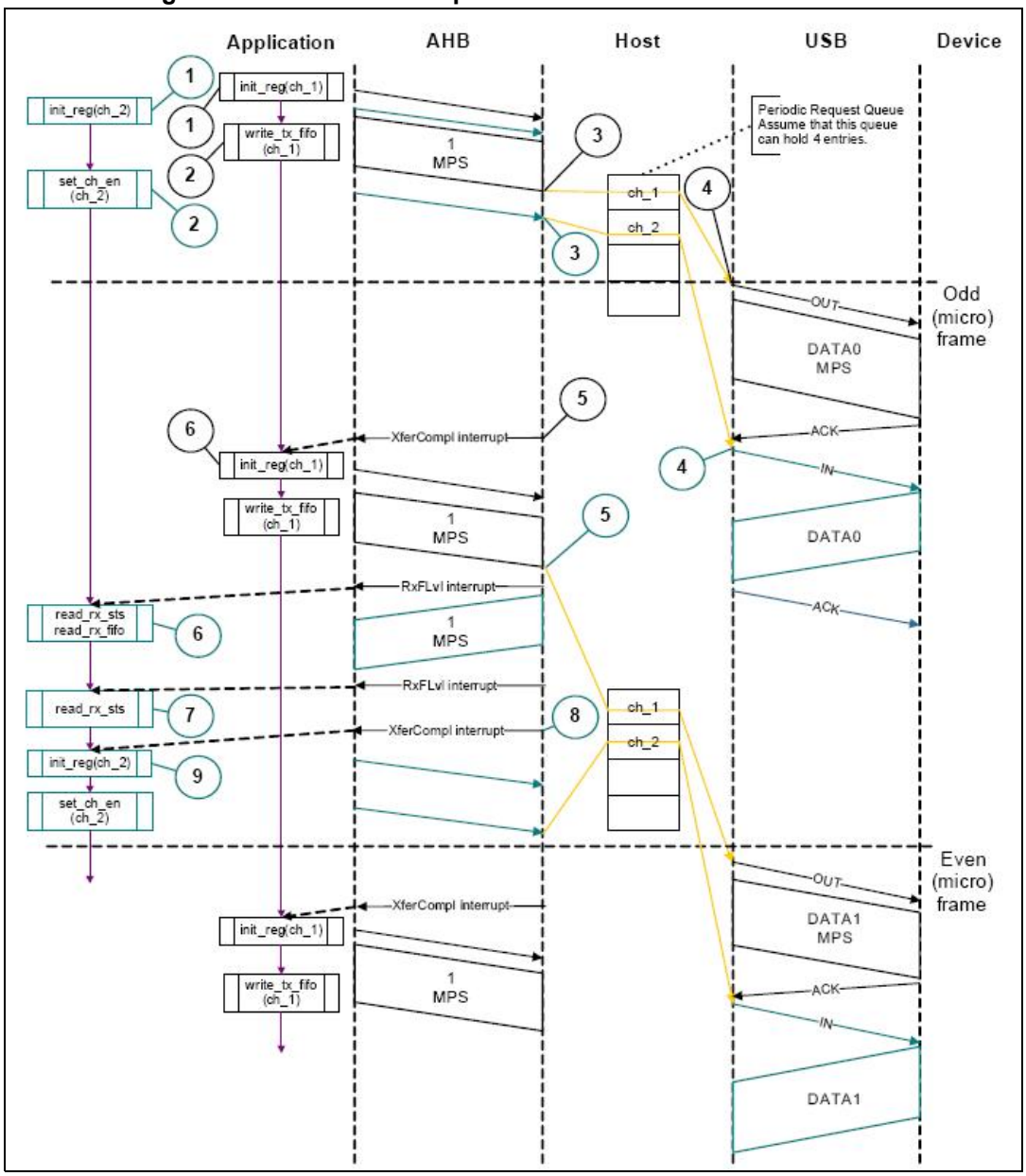

- **Interrupt service routine for interrupt OUT/IN transactions**

  a) Interrupt OUT

```
Unmask (NAK/TXERR/STALL/XFRC/FRMOR)
if (XFRC)
   {
   Reset Error Count
   Mask ACK
   De-allocate Channel
   }
else
   if (STALL or FRMOR)
      {
```

```
        Mask ACK
        Unmask CHH
        Disable Channel
        if (STALL)
          {
          Transfer Done = 1
          }
        }
      else
        if (NAK or TXERR)
          {
          Rewind Buffer Pointers
          Reset Error Count
          Mask ACK
          Unmask CHH
          Disable Channel
          }
        else
          if (CHH)
          {
          Mask CHH
          if (Transfer Done or (Error_count == 3))
            {
            De-allocate Channel
            }
          else
            {
            Re-initialize Channel (in next b_interval - 1 Frame)
            }
          }
        else
          if (ACK)
          {
          Reset Error Count
          Mask ACK
          }
```

The application is expected to write the data packets into the transmit FIFO when the space is available in the transmit FIFO and the Request queue up to the count specified in the MCNT field before switching to another channel. The application uses the NPTXFE interrupt in OTG_HS_GINTSTS to find the transmit FIFO space.

b) Interrupt IN

```
Unmask (NAK/TXERR/XFRC/BBERR/STALL/FRMOR/DTERR)
if (XFRC)
  {
  Reset Error Count
  Mask ACK
  if (OTG_HS_HCTSIZx.PKTCNT == 0)
    {
    De-allocate Channel
    }
  else
    {
```

```
        Transfer Done = 1
        Unmask CHH
        Disable Channel
        }
      }
    else
      if (STALL or FRMOR or NAK or DTERR or BBERR)
        {
        Mask ACK
        Unmask CHH
        Disable Channel
        if (STALL or BBERR)
          {
          Reset Error Count
          Transfer Done = 1
          }
        else
          if (!FRMOR)
          {
          Reset Error Count
          }
        }
    else
      if (TXERR)
        {
        Increment Error Count
        Unmask ACK
        Unmask CHH
        Disable Channel
        }
    else
      if (CHH)
        {
        Mask CHH
        if (Transfer Done or (Error_count == 3))
          {
          De-allocate Channel
          }
        else
          Re-initialize Channel (in next b_interval - 1 /Frame)
        }
      }
    else
      if (ACK)
        {
        Reset Error Count
        Mask ACK
```

}

The application is expected to write the requests for the same channel when the Request queue space is available up to the count specified in the MCNT field before switching to another channel (if any).

- **Interrupt IN transactions**

  The assumptions are:

  – The application is attempting to receive one packet (up to 1 maximum packet size) in every frame, starting with odd (transfer size = 1 024 bytes).

  – The receive FIFO can hold at least one maximum-packet-size packet and two status words per packet (1 031 bytes).

  – Periodic request queue depth = 4.

- **Normal interrupt IN operation**

  The sequence of operations is as follows:

  a) Initialize channel 2. The application must set the ODDFRM bit in OTG_HS_HCCHAR2.

  b) Set the CHENA bit in OTG_HS_HCCHAR2 to write an IN request to the periodic request queue. For a high-bandwidth interrupt transfer, the application must write the OTG_HS_HCCHAR2 register MCNT (maximum number of expected packets in the next frame times) before switching to another channel.

  c) The OTG_HS host writes an IN request to the periodic request queue for each OTG_HS_HCCHAR2 register write with the CHENA bit set.

  d) The OTG_HS host attempts to send an IN token in the next (odd) frame.

  e) As soon as the IN packet is received and written to the receive FIFO, the OTG_HS host generates an RXFLVL interrupt.

  f) In response to the RXFLVL interrupt, read the received packet status to determine the number of bytes received, then read the receive FIFO accordingly. The application must mask the RXFLVL interrupt before reading the receive FIFO, and unmask after reading the entire packet.

  g) The core generates the RXFLVL interrupt for the transfer completion status entry in the receive FIFO. The application must read and ignore the receive packet status when the receive packet status is not an IN data packet (PKTSTS in GRXSTSR ≠ 0b0010).

  h) The core generates an XFRC interrupt as soon as the receive packet status is read.

  i) In response to the XFRC interrupt, read the PKTCNT field in OTG_HS_HCTSIZ2. If the PKTCNT bit in OTG_HS_HCTSIZ2 is not equal to 0, disable the channel before re-initializing the channel for the next transfer, if any). If PKTCNT bit in

OTG_HS_HCTSIZ2 = 0, reinitialize the channel for the next transfer. This time, the application must reset the ODDFRM bit in OTG_HS_HCCHAR2.

- **Isochronous OUT transactions**

  A typical isochronous OUT operation in Slave mode is shown in *Figure 424*. The assumptions are:

  – The application is attempting to send one packet every frame (up to 1 maximum packet size), starting with an odd frame. (transfer size = 1 024 bytes).

  – The periodic transmit FIFO can hold one packet (1 KB).

  – Periodic request queue depth = 4.

  The sequence of operations is as follows:

  a) Initialize and enable channel 1. The application must set the ODDFRM bit in OTG_HS_HCCHAR1.

  b) Write the first packet for channel 1. For a high-bandwidth isochronous transfer, the application must write the subsequent packets up to MCNT (maximum number of packets to be transmitted in the next frame times before switching to another channel.

  c) Along with the last word write of each packet, the OTG_HS host writes an entry to the periodic request queue.

  d) The OTG_HS host attempts to send the OUT token in the next frame (odd).

  e) The OTG_HS host generates the XFRC interrupt as soon as the last packet is transmitted successfully.

  f) In response to the XFRC interrupt, reinitialize the channel for the next transfer.

  g) Handling nonACK responses

Figure 424. Normal isochronous OUT/IN transactions - DMA mode

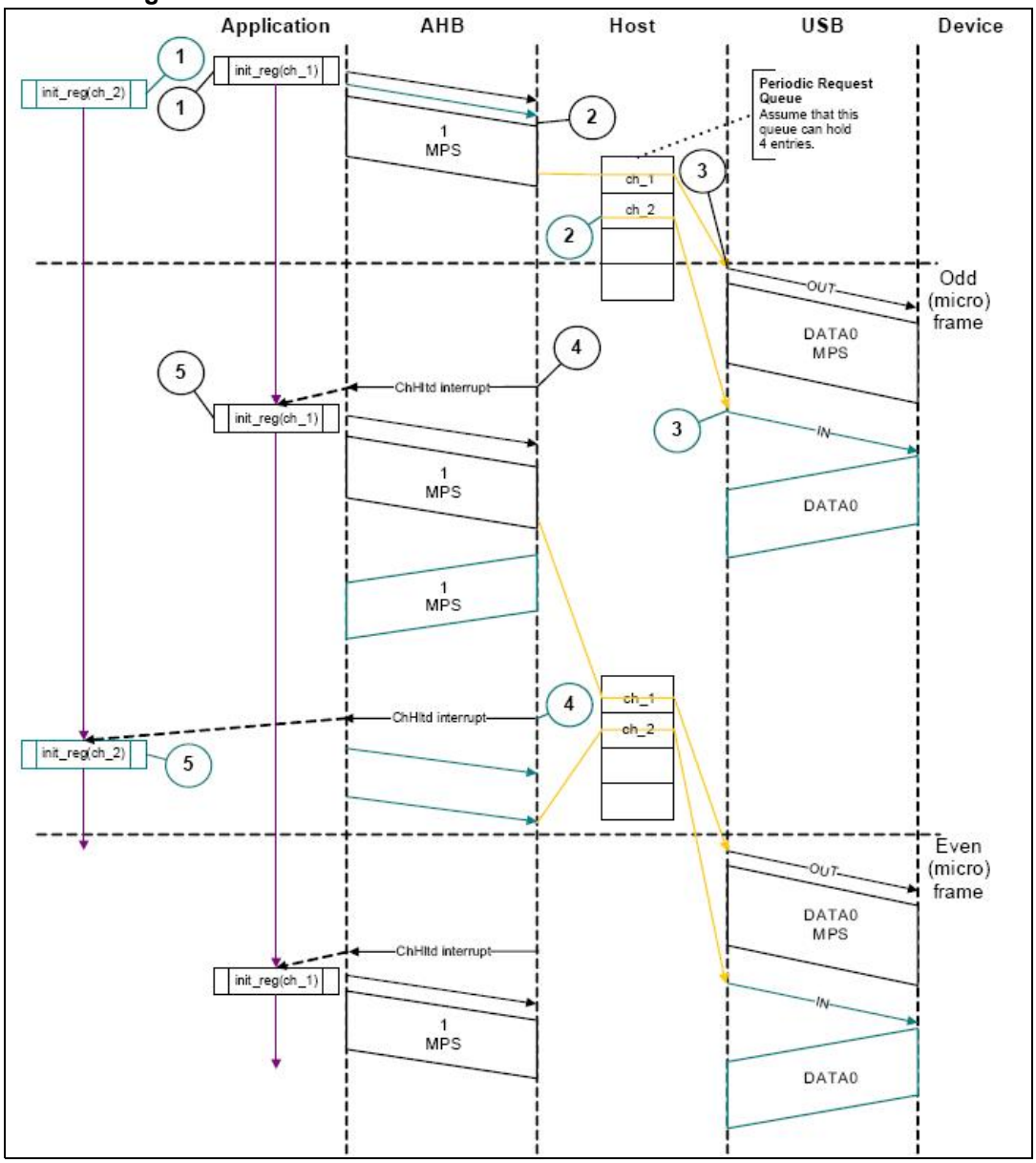

Figure 425. Normal isochronous OUT/IN transactions - Slave mode

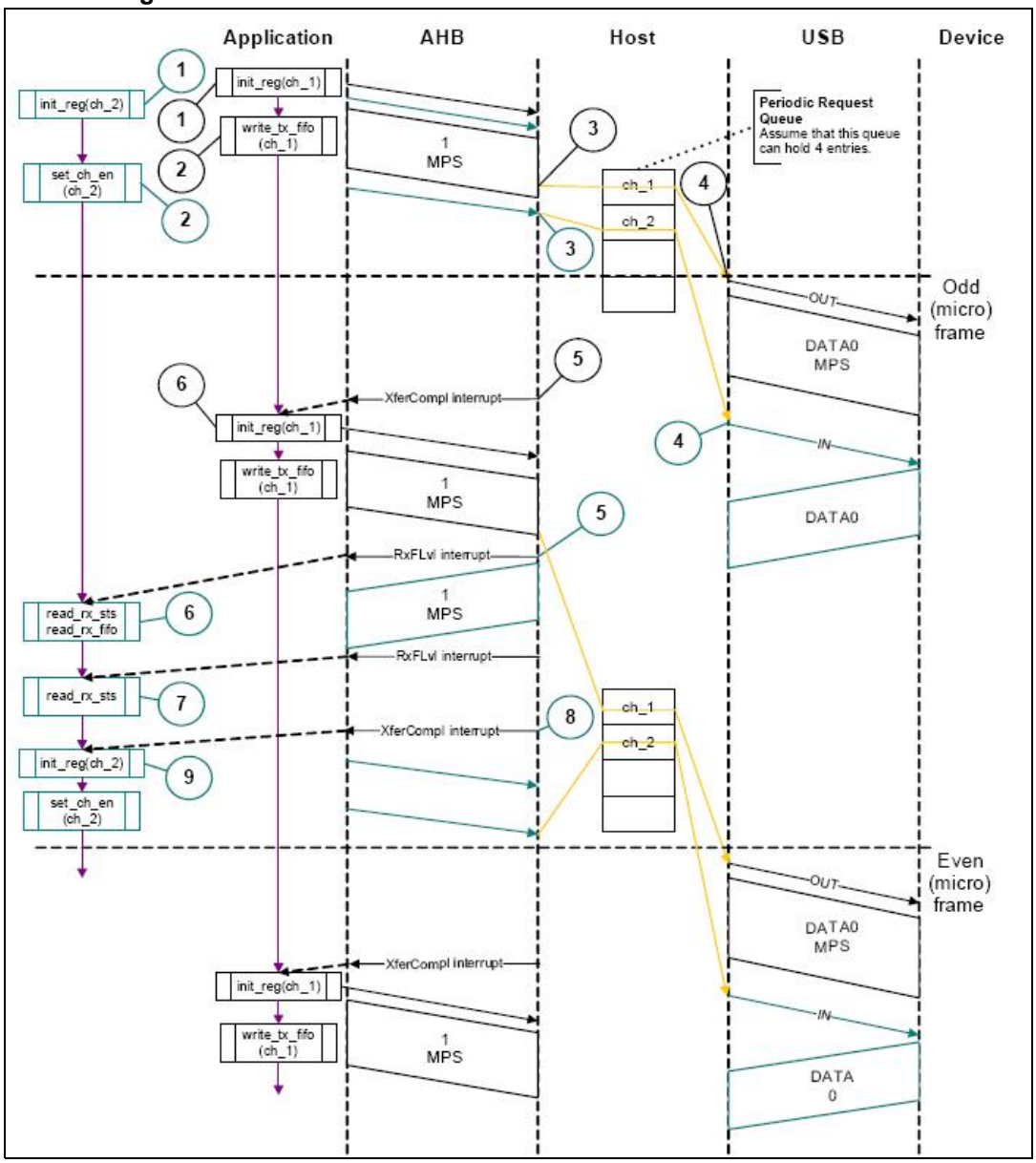

- **Interrupt service routine for isochronous OUT/IN transactions**

  Code sample: Isochronous OUT

```
Unmask (FRMOR/XFRC)
if (XFRC)
   {
   De-allocate Channel
   }
else
   if (FRMOR)
      {
      Unmask CHH
      Disable Channel
      }
```

```
   else
   if (CHH)
     {
     Mask CHH
     De-allocate Channel
     }
```

Code sample: Isochronous IN

```
Unmask (TXERR/XFRC/FRMOR/BBERR)
if (XFRC or FRMOR)
   {
   if (XFRC and (OTG_HS_HCTSIZx.PKTCNT == 0))
     {
     Reset Error Count
     De-allocate Channel
     }
   else
     {
     Unmask CHH
     Disable Channel
     }
   }
   else
     if (TXERR or BBERR)
       {
       Increment Error Count
       Unmask CHH
       Disable Channel
       }
     else
       if (CHH)
         {
         Mask CHH
         if (Transfer Done or (Error_count == 3))
           {
           De-allocate Channel
           }
         else
           {
           Re-initialize Channel
           }
         }
```

- **Isochronous IN transactions**

  The assumptions are:

  – The application is attempting to receive one packet (up to 1 maximum packet size) in every frame starting with the next odd frame (transfer size = 1 024 bytes).

  – The receive FIFO can hold at least one maximum-packet-size packet and two status words per packet (1 031 bytes).

  – Periodic request queue depth = 4.

  The sequence of operations is as follows:

  a) Initialize channel 2. The application must set the ODDFRM bit in OTG_HS_HCCHAR2.

  b) Set the CHENA bit in OTG_HS_HCCHAR2 to write an IN request to the periodic request queue. For a high-bandwidth isochronous transfer, the application must write the OTG_HS_HCCHAR2 register MCNT (maximum number of expected packets in the next frame times) before switching to another channel.

  c) The OTG_HS host writes an IN request to the periodic request queue for each OTG_HS_HCCHAR2 register write with the CHENA bit set.

  d) The OTG_HS host attempts to send an IN token in the next odd frame.

  e) As soon as the IN packet is received and written to the receive FIFO, the OTG_HS host generates an RXFLVL interrupt.

  f) In response to the RXFLVL interrupt, read the received packet status to determine the number of bytes received, then read the receive FIFO accordingly. The application must mask the RXFLVL interrupt before reading the receive FIFO, and unmask it after reading the entire packet.

  g) The core generates an RXFLVL interrupt for the transfer completion status entry in the receive FIFO. This time, the application must read and ignore the receive packet status when the receive packet status is not an IN data packet (PKTSTS bit in OTG_HS_GRXSTSR ≠ 0b0010).

  h) The core generates an XFRC interrupt as soon as the receive packet status is read.

  i) In response to the XFRC interrupt, read the PKTCNT field in OTG_HS_HCTSIZ2. If PKTCNT ≠ 0 in OTG_HS_HCTSIZ2, disable the channel before re-initializing the channel for the next transfer, if any. If PKTCNT = 0 in OTG_HS_HCTSIZ2, reinitialize the channel for the next transfer. This time, the application must reset the ODDFRM bit in OTG_HS_HCCHAR2.

- **Selecting the queue depth**

  Choose the periodic and nonperiodic request queue depths carefully to match the number of periodic/nonperiodic endpoints accessed.

  The nonperiodic request queue depth affects the performance of nonperiodic transfers. The deeper the queue (along with sufficient FIFO size), the more often the core is able to pipeline nonperiodic transfers. If the queue size is small, the core is able to put in new requests only when the queue space is freed up.

  The core's periodic request queue depth is critical to perform periodic transfers as scheduled. Select the periodic queue depth, based on the number of periodic transfers scheduled in a micro-frame. In Slave mode, however, the application must also take into account the disable entry that must be put into the queue. So, if there are two nonhigh-bandwidth periodic endpoints, the periodic request queue depth must be at least 4. If at least one high-bandwidth endpoint is supported, the queue depth must be

8. If the periodic request queue depth is smaller than the periodic transfers scheduled in a micro-frame, a frame overrun condition occurs.

- **Handling babble conditions**

  OTG_HS controller handles two cases of babble: packet babble and port babble. Packet babble occurs if the device sends more data than the maximum packet size for the channel. Port babble occurs if the core continues to receive data from the device at EOF2 (the end of frame 2, which is very close to SOF).

  When OTG_HS controller detects a packet babble, it stops writing data into the Rx buffer and waits for the end of packet (EOP). When it detects an EOP, it flushes already written data in the Rx buffer and generates a Babble interrupt to the application.

  When OTG_HS controller detects a port babble, it flushes the RxFIFO and disables the port. The core then generates a Port disabled interrupt (HPRTINT in OTG_HS_GINTSTS, PENCHNG in OTG_HS_HPRT). On receiving this interrupt, the application must determine that this is not due to an overcurrent condition (another cause of the Port Disabled interrupt) by checking POCA in OTG_HS_HPRT, then perform a soft reset. The core does not send any more tokens after it has detected a port babble condition.

- **Bulk and control OUT/SETUP transactions in DMA mode**

  The sequence of operations is as follows:

  a) Initialize and enable channel 1 as explained in *Section : Channel initialization*.

  b) The HS_OTG host starts fetching the first packet as soon as the channel is enabled. For internal DMA mode, the OTG_HS host uses the programmed DMA address to fetch the packet.

  c) After fetching the last word of the second (last) packet, the OTG_HS host masks channel 1 internally for further arbitration.

  d) The HS_OTG host generates a CHH interrupt as soon as the last packet is sent.

  e) In response to the CHH interrupt, de-allocate the channel for other transfers.

- **NAK and NYET handling with internal DMA**

  a) The OTG_HS host sends a bulk OUT transaction.

  b) The device responds with NAK or NYET.

  c) If the application has unmasked NAK or NYET, the core generates the corresponding interrupt(s) to the application. The application is not required to service these interrupts, since the core takes care of rewinding the buffer pointers and re-initializing the Channel without application intervention.

  d) The core automatically issues a ping token.

  e) When the device returns an ACK, the core continues with the transfer. Optionally, the application can utilize these interrupts, in which case the NAK or NYET interrupt is masked by the application.

  The core does not generate a separate interrupt when NAK or NYET is received by the host functionality.

- **Bulk and control IN transactions in DMA mode**

  The sequence of operations is as follows:

  a) Initialize and enable the used channel (channel x) as explained in *Section : Channel initialization*.

  b) The OTG_HS host writes an IN request to the request queue as soon as the channel receives the grant from the arbiter (arbitration is performed in a round-robin fashion).

c) The OTG_HS host starts writing the received data to the system memory as soon as the last byte is received with no errors.

d) When the last packet is received, the OTG_HS host sets an internal flag to remove any extra IN requests from the request queue.

e) The OTG_HS host flushes the extra requests.

f) The final request to disable channel x is written to the request queue. At this point, channel 2 is internally masked for further arbitration.

g) The OTG_HS host generates the CHH interrupt as soon as the disable request comes to the top of the queue.

h) In response to the CHH interrupt, de-allocate the channel for other transfers.

- **Interrupt OUT transactions in DMA mode**

  a) Initialize and enable channel x as explained in *Section : Channel initialization*.

  b) The OTG_HS host starts fetching the first packet as soon the channel is enabled and writes the OUT request along with the last word fetch. In high-bandwidth transfers, the HS_OTG host continues fetching the next packet (up to the value specified in the MC field) before switching to the next channel.

  c) The OTG_HS host attempts to send the OUT token at the beginning of the next odd frame/micro-frame.

  d) After successfully transmitting the packet, the OTG_HS host generates a CHH interrupt.

  e) In response to the CHH interrupt, reinitialize the channel for the next transfer.

- **Interrupt IN transactions in DMA mode**

  The sequence of operations (channelx) is as follows:

  a) Initialize and enable channel x as explained in *Section : Channel initialization*.

  b) The OTG_HS host writes an IN request to the request queue as soon as the channel x gets the grant from the arbiter (round-robin with fairness). In high-bandwidth transfers, the OTG_HS host writes consecutive writes up to MC times.

  c) The OTG_HS host attempts to send an IN token at the beginning of the next (odd) frame/micro-frame.

  d) As soon the packet is received and written to the receive FIFO, the OTG_HS host generates a CHH interrupt.

  e) In response to the CHH interrupt, reinitialize the channel for the next transfer.

- **Isochronous OUT transactions in DMA mode**

  a) Initialize and enable channel x as explained in *Section : Channel initialization*.

  b) The OTG_HS host starts fetching the first packet as soon as the channel is enabled, and writes the OUT request along with the last word fetch. In high-bandwidth transfers, the OTG_HS host continues fetching the next packet (up to the value specified in the MC field) before switching to the next channel.

  c) The OTG_HS host attempts to send an OUT token at the beginning of the next (odd) frame/micro-frame.

  d) After successfully transmitting the packet, the HS_OTG host generates a CHH interrupt.

  e) In response to the CHH interrupt, reinitialize the channel for the next transfer.

- **Isochronous IN transactions in DMA mode**

  The sequence of operations ((channel x) is as follows:

a) Initialize and enable channel x as explained in *Section : Channel initialization*.

b) The OTG_HS host writes an IN request to the request queue as soon as the channel x gets the grant from the arbiter (round-robin with fairness). In high-bandwidth transfers, the OTG_HS host performs consecutive write operations up to MC times.

c) The OTG_HS host attempts to send an IN token at the beginning of the next (odd) frame/micro-frame.

d) As soon the packet is received and written to the receive FIFO, the OTG_HS host generates a CHH interrupt.

e) In response to the CHH interrupt, reinitialize the channel for the next transfer.

- **Bulk and control OUT/SETUP split transactions in DMA mode**

  The sequence of operations in (channel x) is as follows:

  a) Initialize and enable channel x for start split as explained in *Section : Channel initialization*.

  b) The OTG_HS host starts fetching the first packet as soon the channel is enabled and writes the OUT request along with the last word fetch.

  c) After successfully transmitting start split, the OTG_HS host generates the CHH interrupt.

  d) In response to the CHH interrupt, set the COMPLSPLT bit in HCSPLT1 to send the complete split.

  e) After successfully transmitting complete split, the OTG_HS host generates the CHH interrupt.

  f) In response to the CHH interrupt, de-allocate the channel.

- **Bulk/Control IN split transactions in DMA mode**

  The sequence of operations (channel x) is as follows:

  a) Initialize and enable channel x as explained in *Section : Channel initialization*.

  b) The OTG_HS host writes the start split request to the nonperiodic request after getting the grant from the arbiter. The OTG_HS host masks the channel x internally for the arbitration after writing the request.

  c) As soon as the IN token is transmitted, the OTG_HS host generates the CHH interrupt.

  d) In response to the CHH interrupt, set the COMPLSPLT bit in HCSPLT2 and re-enable the channel to send the complete split token. This unmasks channel x for arbitration.

  e) The OTG_HS host writes the complete split request to the nonperiodic request after receiving the grant from the arbiter.

  f) The OTG_HS host starts writing the packet to the system memory after receiving the packet successfully.

  g) As soon as the received packet is written to the system memory, the OTG_HS host generates a CHH interrupt.

  h) In response to the CHH interrupt, de-allocate the channel.

- **Interrupt OUT split transactions in DMA mode**

  The sequence of operations in (channel x) is as follows:

  a) Initialize and enable channel 1 for start split as explained in *Section : Channel initialization*. The application must set the ODDFRM bit in HCCHAR1.

  b) The HS_OTG host starts reading the packet.

c) The HS_OTG host attempts to send the start split transaction.

d) After successfully transmitting the start split, the OTG_HS host generates the CHH interrupt.

e) In response to the CHH interrupt, set the COMPLSPLT bit in HCSPLT1 to send the complete split.

f) After successfully completing the complete split transaction, the OTG_HS host generates the CHH interrupt.

g) In response to CHH interrupt, de-allocate the channel.

- **Interrupt IN split transactions in DMA mode**

  The sequence of operations in (channel x) is as follows:

  a) Initialize and enable channel x for start split as explained in *Section : Channel initialization*.

  b) The OTG_HS host writes an IN request to the request queue as soon as channel x receives the grant from the arbiter.

  c) The OTG_HS host attempts to send the start split IN token at the beginning of the next odd micro-frame.

  d) The OTG_HS host generates the CHH interrupt after successfully transmitting the start split IN token.

  e) In response to the CHH interrupt, set the COMPLSPLT bit in HCSPLT2 to send the complete split.

  f) As soon as the packet is received successfully, the OTG_HS host starts writing the data to the system memory.

  g) The OTG_HS host generates the CHH interrupt after transferring the received data to the system memory.

  h) In response to the CHH interrupt, de-allocate or reinitialize the channel for the next start split.

- **Isochronous OUT split transactions in DMA mode**

  The sequence of operations (channel x) is as follows:

  a) Initialize and enable channel x for start split (begin) as explained in *Section : Channel initialization*. The application must set the ODDFRM bit in HCCHAR1. Program the MPS field.

  b) The HS_OTG host starts reading the packet.

  c) After successfully transmitting the start split (begin), the HS_OTG host generates the CHH interrupt.

  d) In response to the CHH interrupt, reinitialize the registers to send the start split (end).

  e) After successfully transmitting the start split (end), the OTG_HS host generates a CHH interrupt.

  f) In response to the CHH interrupt, de-allocate the channel.

- **Isochronous IN split transactions in DMA mode**

  The sequence of operations (channel x) is as follows:

  a) Initialize and enable channel x for start split as explained in *Section : Channel initialization*.

  b) The OTG_HS host writes an IN request to the request queue as soon as channel x receives the grant from the arbiter.

c) The OTG_HS host attempts to send the start split IN token at the beginning of the next odd micro-frame.

d) The OTG_HS host generates the CHH interrupt after successfully transmitting the start split IN token.

e) In response to the CHH interrupt, set the COMPLSPLT bit in HCSPLT2 to send the complete split.

f) As soon as the packet is received successfully, the OTG_HS host starts writing the data to the system memory.

g) The OTG_HS host generates the CHH interrupt after transferring the received data to the system memory. In response to the CHH interrupt, de-allocate the channel or reinitialize the channel for the next start split.

35.13.6 Device programming model

Endpoint initialization on USB reset

1. Set the NAK bit for all OUT endpoints
   – SNAK = 1 in OTG_HS_DOEPCTLx (for all OUT endpoints)
2. Unmask the following interrupt bits
   – INEP0 = 1 in OTG_HS_DAINTMSK (control 0 IN endpoint)
   – OUTEP0 = 1 in OTG_HS_DAINTMSK (control 0 OUT endpoint)
   – STUP = 1 in DOEPMSK
   – XFRC = 1 in DOEPMSK
   – XFRC = 1 in DIEPMSK
   – TOC = 1 in DIEPMSK
3. Set up the Data FIFO RAM for each of the FIFOs
   – Program the OTG_HS_GRXFSIZ register, to be able to receive control OUT data and setup data. If thresholding is not enabled, at a minimum, this must be equal to 1 max packet size of control endpoint 0 + 2 words (for the status of the control OUT data packet) + 10 words (for setup packets).
   – Program the OTG_HS_TX0FSIZ register (depending on the FIFO number chosen) to be able to transmit control IN data. At a minimum, this must be equal to 1 max packet size of control endpoint 0.
4. Program the following fields in the endpoint-specific registers for control OUT endpoint 0 to receive a SETUP packet
   – STUPCNT = 3 in OTG_HS_DOEPTSIZ0 (to receive up to 3 back-to-back SETUP packets)
5. In DMA mode, the DOEPDMA0 register should have a valid memory address to store any SETUP packets received.

At this point, all initialization required to receive SETUP packets is done.

Endpoint initialization on enumeration completion

1. On the Enumeration Done interrupt (ENUMDNE in OTG_HS_GINTSTS), read the OTG_HS_DSTS register to determine the enumeration speed.
2. Program the MPSIZ field in OTG_HS_DIEPCTL0 to set the maximum packet size. This step configures control endpoint 0. The maximum packet size for a control endpoint depends on the enumeration speed.
3. In DMA mode, program the DOEPCTL0 register to enable control OUT endpoint 0, to receive a SETUP packet.
   – EPENA bit in DOEPCTL0 = 1

At this point, the device is ready to receive SOF packets and is configured to perform control transfers on control endpoint 0.

Endpoint initialization on SetAddress command

This section describes what the application must do when it receives a SetAddress command in a SETUP packet.

1. Program the OTG_HS_DCFG register with the device address received in the SetAddress command
1. Program the core to send out a status IN packet

Endpoint initialization on SetConfiguration/SetInterface command

This section describes what the application must do when it receives a SetConfiguration or SetInterface command in a SETUP packet.

1. When a SetConfiguration command is received, the application must program the endpoint registers to configure them with the characteristics of the valid endpoints in the new configuration.
2. When a SetInterface command is received, the application must program the endpoint registers of the endpoints affected by this command.
3. Some endpoints that were active in the prior configuration or alternate setting are not valid in the new configuration or alternate setting. These invalid endpoints must be deactivated.
4. Unmask the interrupt for each active endpoint and mask the interrupts for all inactive endpoints in the OTG_HS_DAINTMSK register.
5. Set up the Data FIFO RAM for each FIFO.
6. After all required endpoints are configured; the application must program the core to send a status IN packet.

At this point, the device core is configured to receive and transmit any type of data packet.

Endpoint activation

This section describes the steps required to activate a device endpoint or to configure an existing device endpoint to a new type.

1. Program the characteristics of the required endpoint into the following fields of the OTG_HS_DIEPCTLx register (for IN or bidirectional endpoints) or the OTG_HS_DOEPCTLx register (for OUT or bidirectional endpoints).
   - Maximum packet size
   - USB active endpoint = 1
   - Endpoint start data toggle (for interrupt and bulk endpoints)
   - Endpoint type
   - TxFIFO number
2. Once the endpoint is activated, the core starts decoding the tokens addressed to that endpoint and sends out a valid handshake for each valid token received for the endpoint.

Endpoint deactivation

This section describes the steps required to deactivate an existing endpoint.

1. In the endpoint to be deactivated, clear the USB active endpoint bit in the OTG_HS_DIEPCTLx register (for IN or bidirectional endpoints) or the OTG_HS_DOEPCTLx register (for OUT or bidirectional endpoints).
2. Once the endpoint is deactivated, the core ignores tokens addressed to that endpoint, which results in a timeout on the USB.

Note: The application must meet the following conditions to set up the device core to handle traffic:
NPTXFEM and RXFLVLM in GINTMSK must be cleared.

35.13.7 Operational model

SETUP and OUT data transfers

This section describes the internal data flow and application-level operations during data OUT transfers and SETUP transactions.

- **Packet read**

This section describes how to read packets (OUT data and SETUP packets) from the receive FIFO in Slave mode.

1. On catching an RXFLVL interrupt (OTG_HS_GINTSTS register), the application must read the Receive status pop register (OTG_HS_GRXSTSP).
2. The application can mask the RXFLVL interrupt (in OTG_HS_GINTSTS) by writing to RXFLVL = 0 (in GINTMSK), until it has read the packet from the receive FIFO.
3. If the received packet's byte count is not 0, the byte count amount of data is popped from the receive Data FIFO and stored in memory. If the received packet byte count is 0, no data is popped from the receive data FIFO.

4. The receive FIFO packet status readout indicates one of the following:
   a) Global OUT NAK pattern:
   PKTSTS = Global OUT NAK, BCNT = 0x000, EPNUM = Don't Care (0x0), DPID = Don't Care (0b00).
   These data indicate that the global OUT NAK bit has taken effect.
   b) SETUP packet pattern:
   PKTSTS = SETUP, BCNT = 0x008, EPNUM = Control EP Num, DPID = D0.
   These data indicate that a SETUP packet for the specified endpoint is now available for reading from the receive FIFO.
   c) Setup stage done pattern:
   PKTSTS = Setup Stage Done, BCNT = 0x0, EPNUM = Control EP Num, DPID = Don't Care (0b00).
   These data indicate that the Setup stage for the specified endpoint has completed and the Data stage has started. After this entry is popped from the receive FIFO, the core asserts a Setup interrupt on the specified control OUT endpoint.
   d) Data OUT packet pattern:
   PKTSTS = DataOUT, BCNT = size of the received data OUT packet (0 ≤ BCNT ≤ 1 024), EPNUM = EPNUM on which the packet was received, DPID = Actual Data PID.
   e) Data transfer completed pattern:
   PKTSTS = Data OUT Transfer Done, BCNT = 0x0, EPNUM = OUT EP Num on which the data transfer is complete, DPID = Don't Care (0b00).
   These data indicate that an OUT data transfer for the specified OUT endpoint has completed. After this entry is popped from the receive FIFO, the core asserts a Transfer Completed interrupt on the specified OUT endpoint.
5. After the data payload is popped from the receive FIFO, the RXFLVL interrupt (OTG_HS_GINTSTS) must be unmasked.
6. Steps 1–5 are repeated every time the application detects assertion of the interrupt line due to RXFLVL in OTG_HS_GINTSTS. Reading an empty receive FIFO can result in undefined core behavior.

Figure 426 provides a flowchart of the above procedure.

Figure 426. Receive FIFO packet read in slave mode

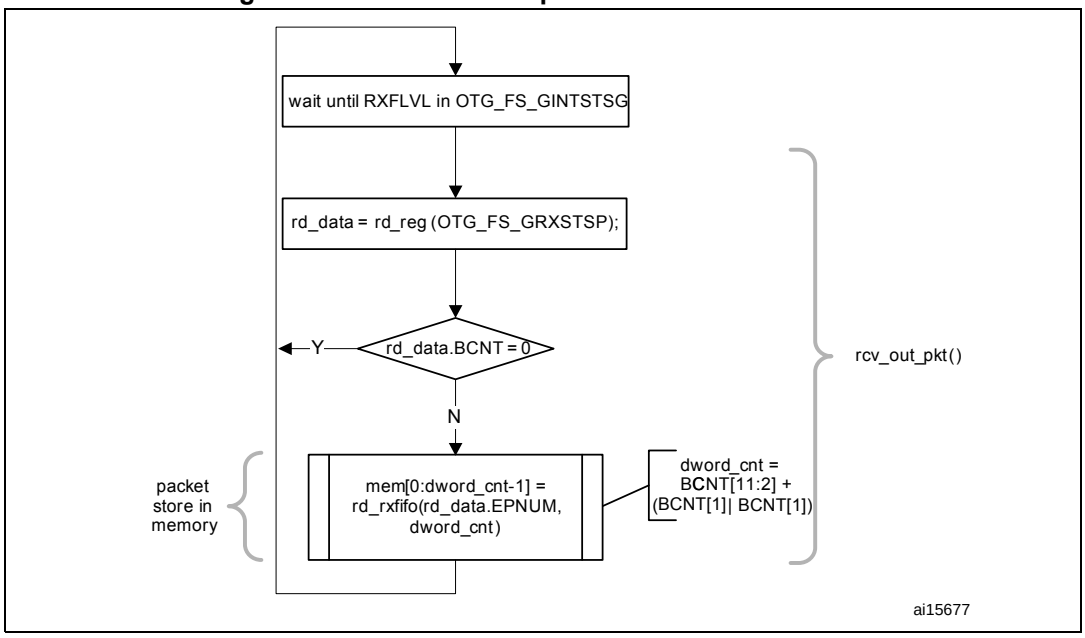

- **SETUP transactions**

This section describes how the core handles SETUP packets and the application's sequence for handling SETUP transactions.

- **Application requirements**

1. To receive a SETUP packet, the STUPCNT field (OTG_HS_DOEPTSIZx) in a control OUT endpoint must be programmed to a nonzero value. When the application programs the STUPCNT field to a nonzero value, the core receives SETUP packets and writes them to the receive FIFO, irrespective of the NAK status and EPENA bit setting in OTG_HS_DOEPCTLx. The STUPCNT field is decremented every time the control endpoint receives a SETUP packet. If the STUPCNT field is not programmed to a proper value before receiving a SETUP packet, the core still receives the SETUP packet and decrements the STUPCNT field, but the application may not be able to determine the correct number of SETUP packets received in the Setup stage of a control transfer.
   - STUPCNT = 3 in OTG_HS_DOEPTSIZx
2. The application must always allocate some extra space in the Receive data FIFO, to be able to receive up to three SETUP packets on a control endpoint.
   - The space to be reserved is 10 words. Three words are required for the first SETUP packet, 1 word is required for the Setup stage done word and 6 words are required to store two extra SETUP packets among all control endpoints.
   - 3 words per SETUP packet are required to store 8 bytes of SETUP data and 4 bytes of SETUP status (Setup packet pattern). The core reserves this space in the receive data.
   - FIFO to write SETUP data only, and never uses this space for data packets.
3. The application must read the 2 words of the SETUP packet from the receive FIFO.
4. The application must read and discard the Setup stage done word from the receive FIFO.

- **Internal data flow**

5. When a SETUP packet is received, the core writes the received data to the receive FIFO, without checking for available space in the receive FIFO and irrespective of the endpoint's NAK and STALL bit settings.
   – The core internally sets the IN NAK and OUT NAK bits for the control IN/OUT endpoints on which the SETUP packet was received.
6. For every SETUP packet received on the USB, 3 words of data are written to the receive FIFO, and the STUPCNT field is decremented by 1.
   – The first word contains control information used internally by the core
   – The second word contains the first 4 bytes of the SETUP command
   – The third word contains the last 4 bytes of the SETUP command
7. When the Setup stage changes to a Data IN/OUT stage, the core writes an entry (Setup stage done word) to the receive FIFO, indicating the completion of the Setup stage.
8. On the AHB side, SETUP packets are emptied by the application.
9. When the application pops the Setup stage done word from the receive FIFO, the core interrupts the application with an STUP interrupt (OTG_HS_DOEPINTx), indicating it can process the received SETUP packet.
   – The core clears the endpoint enable bit for control OUT endpoints.

- **Application programming sequence**

1. Program the OTG_HS_DOEPTSIZx register.
   – STUPCNT = 3
2. Wait for the RXFLVL interrupt (OTG_HS_GINTSTS) and empty the data packets from the receive FIFO.
3. Assertion of the STUP interrupt (OTG_HS_DOEPINTx) marks a successful completion of the SETUP Data Transfer.
   – On this interrupt, the application must read the OTG_HS_DOEPTSIZx register to determine the number of SETUP packets received and process the last received SETUP packet.

Figure 427. Processing a SETUP packet

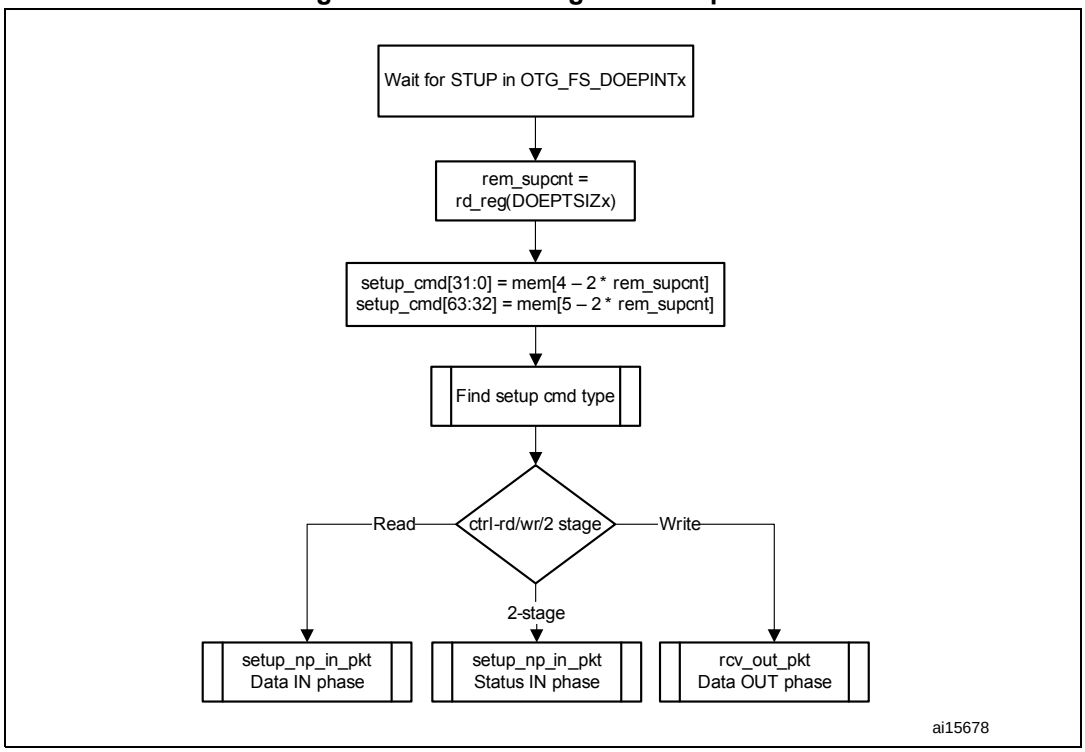

- **Handling more than three back-to-back SETUP packets**

Per the USB 2.0 specification, normally, during a SETUP packet error, a host does not send more than three back-to-back SETUP packets to the same endpoint. However, the USB 2.0 specification does not limit the number of back-to-back SETUP packets a host can send to the same endpoint. When this condition occurs, the OTG_HS controller generates an interrupt (B2BSTUP in OTG_HS_DOEPINTx).

- **Setting the global OUT NAK**

Internal data flow:

1. When the application sets the Global OUT NAK (SGONAK bit in OTG_HS_DCTL), the core stops writing data, except SETUP packets, to the receive FIFO. Irrespective of the space availability in the receive FIFO, nonisochronous OUT tokens receive a NAK handshake response, and the core ignores isochronous OUT data packets
2. The core writes the Global OUT NAK pattern to the receive FIFO. The application must reserve enough receive FIFO space to write this data pattern.
3. When the application pops the Global OUT NAK pattern word from the receive FIFO, the core sets the GONAKEFF interrupt (OTG_HS_GINTSTS).
4. Once the application detects this interrupt, it can assume that the core is in Global OUT NAK mode. The application can clear this interrupt by clearing the SGONAK bit in OTG_HS_DCTL.

Application programming sequence:

1. To stop receiving any kind of data in the receive FIFO, the application must set the Global OUT NAK bit by programming the following field:
   – SGONAK = 1 in OTG_HS_DCTL
2. Wait for the assertion of the GONAKEFF interrupt in OTG_HS_GINTSTS. When asserted, this interrupt indicates that the core has stopped receiving any type of data except SETUP packets.
3. The application can receive valid OUT packets after it has set SGONAK in OTG_HS_DCTL and before the core asserts the GONAKEFF interrupt (OTG_HS_GINTSTS).
4. The application can temporarily mask this interrupt by writing to the GINAKEFFM bit in GINTMSK.
   – GINAKEFFM = 0 in GINTMSK
5. Whenever the application is ready to exit the Global OUT NAK mode, it must clear the SGONAK bit in OTG_HS_DCTL. This also clears the GONAKEFF interrupt (OTG_HS_GINTSTS).
   – OTG_HS_DCTL = 1 in CGONAK
6. If the application has masked this interrupt earlier, it must be unmasked as follows:
   – GINAKEFFM = 1 in GINTMSK

- **Disabling an OUT endpoint**

The application must use this sequence to disable an OUT endpoint that it has enabled.

Application programming sequence:

1. Before disabling any OUT endpoint, the application must enable Global OUT NAK mode in the core.
   – SGONAK = 1 in OTG_HS_DCTL
2. Wait for the GONAKEFF interrupt (OTG_HS_GINTSTS)
3. Disable the required OUT endpoint by programming the following fields:
   – EPDIS = 1 in OTG_HS_DOEPCTLx
   – SNAK = 1 in OTG_HS_DOEPCTLx
4. Wait for the EPDISD interrupt (OTG_HS_DOEPINTx), which indicates that the OUT endpoint is completely disabled. When the EPDISD interrupt is asserted, the core also clears the following bits:
   – EPDIS = 0 in OTG_HS_DOEPCTLx
   – EPENA = 0 in OTG_HS_DOEPCTLx
5. The application must clear the Global OUT NAK bit to start receiving data from other nondisabled OUT endpoints.
   – SGONAK = 0 in OTG_HS_DCTL

- **Transfer Stop Programming for OUT endpoints**

The application must use the following programing sequence to stop any transfers (because of an interrupt from the host, typically a reset).

Sequence of operations:

1. Enable all OUT endpoints by setting
   – EPENA = 1 in all OTG_HS_DOEPCTLx registers.
2. Flush the RxFIFO as follows
   – Poll OTG_HS_GRSTCTL.AHBIDL until it is 1. This indicates that AHB master is idle.
   – Perform read modify write operation on OTG_HS_GRSTCTL.RXFFLSH =1
   – Poll OTG_HS_GRSTCTL.RXFFLSH until it is 0, but also using a timeout of less than 10 milli-seconds (corresponds to minimum reset signaling duration). If 0 is seen before the timeout, then the RxFIFO flush is successful. If at the moment the timeout occurs, there is still a 1, (this may be due to a packet on EP0 coming from the host) then go back (once only) to the previous step (“Perform read modify write operation”).
3. Before disabling any OUT endpoint, the application must enable Global OUT NAK mode in the core, according to the instructions in “**Setting the global OUT NAK** ***on page 1521***”. This ensures that data in the RxFIFO is sent to the application successfully. Set SGONAK = 1 in OTG_HS_DCTL
4. Wait for the GONAKEFF interrupt (OTG_HS_GINTSTS)
5. Disable all active OUT endpoints by programming the following register bits:
   – EPDIS = 1 in registers OTG_HS_DOEPCTLx
   – SNAK = 1 in registers OTG_HS_DOEPCTLx
6. Wait for the EPDIS interrupt in OTG_HS_DOEPINTx for each OUT endpoint programmed in the previous step. The EPDIS interrupt in OTG_HS_DOEPINTx indicates that the corresponding OUT endpoint is completely disabled. When the EPDIS interrupt is asserted, the following bits are cleared:
   – EPENA = 0 in registers OTG_HS_DOEPCTLx
   – EPDIS = 0 in registers OTG_HS_DOEPCTLx
   – SNAK = 0 in registers OTG_HS_DOEPCTLx

- **Generic non-isochronous OUT data transfers**

This section describes a regular nonisochronous OUT data transfer (control, bulk, or interrupt).

Application requirements:

1. Before setting up an OUT transfer, the application must allocate a buffer in the memory to accommodate all data to be received as part of the OUT transfer.
2. For OUT transfers, the transfer size field in the endpoint’s transfer size register must be a multiple of the maximum packet size of the endpoint, adjusted to the word boundary.
   – transfer size[EPNUM] = n × (MPSIZ[EPNUM] + 4 – (MPSIZ[EPNUM] mod 4))
   – packet count[EPNUM] = n
   – $n > 0$
3. On any OUT endpoint interrupt, the application must read the endpoint’s transfer size register to calculate the size of the payload in the memory. The received payload size can be less than the programmed transfer size.
   – Payload size in memory = application programmed initial transfer size – core updated final transfer size
   – Number of USB packets in which this payload was received = application programmed initial packet count – core updated final packet count

Internal data flow:

1. The application must set the transfer size and packet count fields in the endpoint-specific registers, clear the NAK bit, and enable the endpoint to receive the data.
2. Once the NAK bit is cleared, the core starts receiving data and writes it to the receive FIFO, as long as there is space in the receive FIFO. For every data packet received on the USB, the data packet and its status are written to the receive FIFO. Every packet (maximum packet size or short packet) written to the receive FIFO decrements the packet count field for that endpoint by 1.
   - OUT data packets received with bad data CRC are flushed from the receive FIFO automatically.
   - After sending an ACK for the packet on the USB, the core discards nonisochronous OUT data packets that the host, which cannot detect the ACK, re-sends. The application does not detect multiple back-to-back data OUT packets on the same endpoint with the same data PID. In this case the packet count is not decremented.
   - If there is no space in the receive FIFO, isochronous or nonisochronous data packets are ignored and not written to the receive FIFO. Additionally, nonisochronous OUT tokens receive a NAK handshake reply.
   - In all the above three cases, the packet count is not decremented because no data are written to the receive FIFO.
3. When the packet count becomes 0 or when a short packet is received on the endpoint, the NAK bit for that endpoint is set. Once the NAK bit is set, the isochronous or nonisochronous data packets are ignored and not written to the receive FIFO, and nonisochronous OUT tokens receive a NAK handshake reply.
4. After the data are written to the receive FIFO, the application reads the data from the receive FIFO and writes it to external memory, one packet at a time per endpoint.
5. At the end of every packet write on the AHB to external memory, the transfer size for the endpoint is decremented by the size of the written packet.
6. The OUT data transfer completed pattern for an OUT endpoint is written to the receive FIFO on one of the following conditions:
   - The transfer size is 0 and the packet count is 0
   - The last OUT data packet written to the receive FIFO is a short packet ($0 \leq$ packet size $<$ maximum packet size)
7. When either the application pops this entry (OUT data transfer completed), a transfer completed interrupt is generated for the endpoint and the endpoint enable is cleared.

Application programming sequence:

1. Program the OTG_HS_DOEPTSIZx register for the transfer size and the corresponding packet count.
2. Program the OTG_HS_DOEPCTLx register with the endpoint characteristics, and set the EPENA and CNAK bits.
   – EPENA = 1 in OTG_HS_DOEPCTLx
   – CNAK = 1 in OTG_HS_DOEPCTLx
3. Wait for the RXFLVL interrupt (in OTG_HS_GINTSTS) and empty the data packets from the receive FIFO.
   – This step can be repeated many times, depending on the transfer size.
4. Asserting the XFRC interrupt (OTG_HS_DOEPINTx) marks a successful completion of the nonisochronous OUT data transfer.
5. Read the OTG_HS_DOEPTSIZx register to determine the size of the received data payload.

- **Generic isochronous OUT data transfer**

This section describes a regular isochronous OUT data transfer.

Application requirements:

1. All the application requirements for nonisochronous OUT data transfers also apply to isochronous OUT data transfers.
2. For isochronous OUT data transfers, the transfer size and packet count fields must always be set to the number of maximum-packet-size packets that can be received in a single frame and no more. Isochronous OUT data transfers cannot span more than 1 frame.
3. The application must read all isochronous OUT data packets from the receive FIFO (data and status) before the end of the periodic frame (EOPF interrupt in OTG_HS_GINTSTS).
4. To receive data in the following frame, an isochronous OUT endpoint must be enabled after the EOPF (OTG_HS_GINTSTS) and before the SOF (OTG_HS_GINTSTS).

Internal data flow:

1. The internal data flow for isochronous OUT endpoints is the same as that for nonisochronous OUT endpoints, but for a few differences.
2. When an isochronous OUT endpoint is enabled by setting the Endpoint Enable and clearing the NAK bits, the Even/Odd frame bit must also be set appropriately. The core receives data on an isochronous OUT endpoint in a particular frame only if the following condition is met:
   – EONUM (in OTG_HS_DOEPCTLx) = SOFFN[0] (in OTG_HS_DSTS)
3. When the application completely reads an isochronous OUT data packet (data and status) from the receive FIFO, the core updates the RXDPID field in OTG_HS_DOEPTSIZx with the data PID of the last isochronous OUT data packet read from the receive FIFO.

Application programming sequence:

1. Program the OTG_HS_DOEPTSIZx register for the transfer size and the corresponding packet count
2. Program the OTG_HS_DOEPCTLx register with the endpoint characteristics and set the Endpoint Enable, ClearNAK, and Even/Odd frame bits.
   – EPENA = 1
   – CNAK = 1
   – EONUM = (0: Even/1: Odd)
3. In Slave mode, wait for the RXFLVL interrupt (in OTG_HS_GINTSTS) and empty the data packets from the receive FIFO
   – This step can be repeated many times, depending on the transfer size.
4. The assertion of the XFRC interrupt (in OTG_HS_DOEPINTx) marks the completion of the isochronous OUT data transfer. This interrupt does not necessarily mean that the data in memory are good.
5. This interrupt cannot always be detected for isochronous OUT transfers. Instead, the application can detect the IISOOXFRM interrupt in OTG_HS_GINTSTS.
6. Read the OTG_HS_DOEPTSIZx register to determine the size of the received transfer and to determine the validity of the data received in the frame. The application must treat the data received in memory as valid only if one of the following conditions is met:
   – RXDPID = D0 (in OTG_HS_DOEPTSIZx) and the number of USB packets in which this payload was received = 1
   – RXDPID = D1 (in OTG_HS_DOEPTSIZx) and the number of USB packets in which this payload was received = 2
   – RXDPID = D2 (in OTG_HS_DOEPTSIZx) and the number of USB packets in which this payload was received = 3

     The number of USB packets in which this payload was received = Application programmed initial packet count – Core updated final packet count

   The application can discard invalid data packets.

- **Incomplete isochronous OUT data transfers**

This section describes the application programming sequence when isochronous OUT data packets are dropped inside the core.

Internal data flow:

1. For isochronous OUT endpoints, the XFRC interrupt (in OTG_HS_DOEPINTx) may not always be asserted. If the core drops isochronous OUT data packets, the application could fail to detect the XFRC interrupt (OTG_HS_DOEPINTx) under the following circumstances:
   – When the receive FIFO cannot accommodate the complete ISO OUT data packet, the core drops the received ISO OUT data
   – When the isochronous OUT data packet is received with CRC errors
   – When the isochronous OUT token received by the core is corrupted
   – When the application is very slow in reading the data from the receive FIFO
2. When the core detects an end of periodic frame before transfer completion to all isochronous OUT endpoints, it asserts the incomplete Isochronous OUT data interrupt (IISOOXFRM in OTG_HS_GINTSTS), indicating that an XFRC interrupt (in OTG_HS_DOEPINTx) is not asserted on at least one of the isochronous OUT endpoints. At this point, the endpoint with the incomplete transfer remains enabled, but no active transfers remain in progress on this endpoint on the USB.

Application programming sequence:

1. Asserting the IISOOXFRM interrupt (OTG_HS_GINTSTS) indicates that in the current frame, at least one isochronous OUT endpoint has an incomplete transfer.
2. If this occurs because isochronous OUT data is not completely emptied from the endpoint, the application must ensure that the application empties all isochronous OUT data (data and status) from the receive FIFO before proceeding.
   – When all data are emptied from the receive FIFO, the application can detect the XFRC interrupt (OTG_HS_DOEPINTx). In this case, the application must re-enable the endpoint to receive isochronous OUT data in the next frame.
3. When it receives an IISOOXFRM interrupt (in OTG_HS_GINTSTS), the application must read the control registers of all isochronous OUT endpoints (OTG_HS_DOEPCTLx) to determine which endpoints had an incomplete transfer in the current micro-frame. An endpoint transfer is incomplete if both the following conditions are met:
   – EONUM bit (in OTG_HS_DOEPCTLx) = SOFFN[0] (in OTG_HS_DSTS)
   – EPENA = 1 (in OTG_HS_DOEPCTLx)
4. The previous step must be performed before the SOF interrupt (in OTG_HS_GINTSTS) is detected, to ensure that the current frame number is not changed.
5. For isochronous OUT endpoints with incomplete transfers, the application must discard the data in the memory and disable the endpoint by setting the EPDIS bit in OTG_HS_DOEPCTLx.
6. Wait for the EPDIS interrupt (in OTG_HS_DOEPINTx) and enable the endpoint to receive new data in the next frame.
   – Because the core can take some time to disable the endpoint, the application may not be able to receive the data in the next frame after receiving bad isochronous data.

- **Stalling a nonisochronous OUT endpoint**

This section describes how the application can stall a nonisochronous endpoint.

1. Put the core in the Global OUT NAK mode.
2. Disable the required endpoint
   – When disabling the endpoint, instead of setting the SNAK bit in OTG_HS_DOEPCTL, set STALL = 1 (in OTG_HS_DOEPCTL).

     The STALL bit always takes precedence over the NAK bit.
3. When the application is ready to end the STALL handshake for the endpoint, the STALL bit (in OTG_HS_DOEPCTLx) must be cleared.
4. If the application is setting or clearing a STALL for an endpoint due to a SetFeature.Endpoint Halt or ClearFeature.Endpoint Halt command, the STALL bit must be set or cleared before the application sets up the Status stage transfer on the control endpoint.

Examples

This section describes and depicts some fundamental transfer types and scenarios.

- Slave mode bulk OUT transaction

Figure 428 depicts the reception of a single Bulk OUT Data packet from the USB to the AHB and describes the events involved in the process.

Figure 428. Slave mode bulk OUT transaction

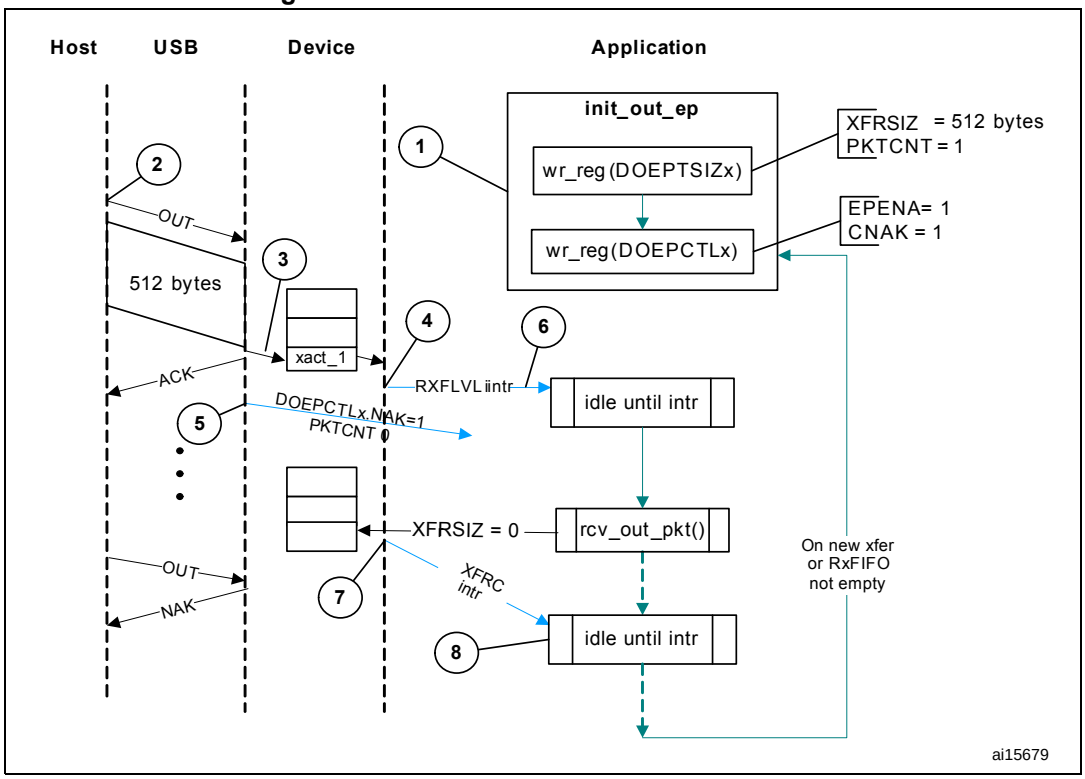

After a SetConfiguration/SetInterface command, the application initializes all OUT endpoints by setting CNAK = 1 and EPENA = 1 (in OTG_HS_DOEPCTLx), and setting a suitable XFRSIZ and PKTCNT in the OTG_HS_DOEPTSIZx register.

1. Host attempts to send data (OUT token) to an endpoint.
2. When the core receives the OUT token on the USB, it stores the packet in the RxFIFO because space is available there.
3. After writing the complete packet in the RxFIFO, the core then asserts the RXFLVL interrupt (in OTG_HS_GINTSTS).
4. On receiving the PKTCNT number of USB packets, the core internally sets the NAK bit for this endpoint to prevent it from receiving any more packets.
5. The application processes the interrupt and reads the data from the RxFIFO.
6. When the application has read all the data (equivalent to XFRSIZ), the core generates an XFRC interrupt (in OTG_HS_DOEPINTx).
7. The application processes the interrupt and uses the setting of the XFRC interrupt bit (in OTG_HS_DOEPINTx) to determine that the intended transfer is complete.

IN data transfers

- **Packet write**

This section describes how the application writes data packets to the endpoint FIFO in Slave mode when dedicated transmit FIFOs are enabled.

1. The application can either choose the polling or the interrupt mode.
   - In polling mode, the application monitors the status of the endpoint transmit data FIFO by reading the OTG_HS_DTXFSTSx register, to determine if there is enough space in the data FIFO.
   - In interrupt mode, the application waits for the TXFE interrupt (in OTG_HS_DIEPINTx) and then reads the OTG_HS_DTXFSTSx register, to determine if there is enough space in the data FIFO.
   - To write a single nonzero length data packet, there must be space to write the entire packet in the data FIFO.
   - To write zero length packet, the application must not look at the FIFO space.
2. Using one of the above mentioned methods, when the application determines that there is enough space to write a transmit packet, the application must first write into the endpoint control register, before writing the data into the data FIFO. Typically, the application, must do a read modify write on the OTG_HS_DIEPCTLx register to avoid modifying the contents of the register, except for setting the Endpoint Enable bit.

The application can write multiple packets for the same endpoint into the transmit FIFO, if space is available. For periodic IN endpoints, the application must write packets only for one micro-frame. It can write packets for the next periodic transaction only after getting transfer complete for the previous transaction.

- **Setting IN endpoint NAK**

Internal data flow:

1. When the application sets the IN NAK for a particular endpoint, the core stops transmitting data on the endpoint, irrespective of data availability in the endpoint's transmit FIFO.
2. Nonisochronous IN tokens receive a NAK handshake reply
   - Isochronous IN tokens receive a zero-data-length packet reply
3. The core asserts the INEPNE (IN endpoint NAK effective) interrupt in OTG_HS_DIEPINTx in response to the SNAK bit in OTG_HS_DIEPCTLx.
4. Once this interrupt is seen by the application, the application can assume that the endpoint is in IN NAK mode. This interrupt can be cleared by the application by setting the CNAK bit in OTG_HS_DIEPCTLx.

Application programming sequence:

1. To stop transmitting any data on a particular IN endpoint, the application must set the IN NAK bit. To set this bit, the following field must be programmed.
   – SNAK = 1 in OTG_HS_DIEPCTLx
2. Wait for assertion of the INEPNE interrupt in OTG_HS_DIEPINTx. This interrupt indicates that the core has stopped transmitting data on the endpoint.
3. The core can transmit valid IN data on the endpoint after the application has set the NAK bit, but before the assertion of the NAK Effective interrupt.
4. The application can mask this interrupt temporarily by writing to the INEPNEM bit in DIEPMSK.
   – INEPNEM = 0 in DIEPMSK
5. To exit Endpoint NAK mode, the application must clear the NAK status bit (NAKSTS) in OTG_HS_DIEPCTLx. This also clears the INEPNE interrupt (in OTG_HS_DIEPINTx).
   – CNAK = 1 in OTG_HS_DIEPCTLx
6. If the application masked this interrupt earlier, it must be unmasked as follows:
   – INEPNEM = 1 in DIEPMSK

- **IN endpoint disable**

Use the following sequence to disable a specific IN endpoint that has been previously enabled.

Application programming sequence:

1. The application must stop writing data on the AHB for the IN endpoint to be disabled.
2. The application must set the endpoint in NAK mode.
   – SNAK = 1 in OTG_HS_DIEPCTLx
3. Wait for the INEPNE interrupt in OTG_HS_DIEPINTx.
4. Set the following bits in the OTG_HS_DIEPCTLx register for the endpoint that must be disabled.
   – EPDIS = 1 in OTG_HS_DIEPCTLx
   – SNAK = 1 in OTG_HS_DIEPCTLx
5. Assertion of the EPDISD interrupt in OTG_HS_DIEPINTx indicates that the core has completely disabled the specified endpoint. Along with the assertion of the interrupt, the core also clears the following bits:
   – EPENA = 0 in OTG_HS_DIEPCTLx
   – EPDIS = 0 in OTG_HS_DIEPCTLx
6. The application must read the OTG_HS_DIEPTSIZx register for the periodic IN EP, to calculate how much data on the endpoint were transmitted on the USB.
7. The application must flush the data in the Endpoint transmit FIFO, by setting the following fields in the OTG_HS_GRSTCTL register:
   – TXFNUM (in OTG_HS_GRSTCTL) = Endpoint transmit FIFO number
   – TXFFLSH in (OTG_HS_GRSTCTL) = 1

The application must poll the OTG_HS_GRSTCTL register, until the TXFFLSH bit is cleared by the core, which indicates the end of flush operation. To transmit new data on this endpoint, the application can re-enable the endpoint at a later point.

- **Transfer Stop Programming for IN endpoints**

The application must use the following programing sequence to stop any transfers (because of an interrupt from the host, typically a reset).

Sequence of operations:

1. Disable the IN endpoint by setting:
   – EPDIS = 1 in all OTG_HS_DIEPCTLx registers
2. Wait for the EPDIS interrupt in OTG_HS_DIEPINTx, which indicates that the IN endpoint is completely disabled. When the EPDIS interrupt is asserted the following bits are cleared:
   – EPDIS = 0 in OTG_HS_DIEPCTLx
   – EPENA = 0 in OTG_HS_DIEPCTLx
3. Flush the TxFIFO by programming the following bits:
   – TXFFLSH = 1 in OTG_HS_GRSTCTL
   – TXFNUM = “FIFO number specific to endpoint” in OTG_HS_GRSTCTL
4. The application can start polling till TXFFLSH in OTG_HS_GRSTCTL is cleared. When this bit is cleared, it ensures that there is no data left in the Tx FIFO.

- **Generic nonperiodic IN data transfers**

Application requirements:

1. Before setting up an IN transfer, the application must ensure that all data to be transmitted as part of the IN transfer are part of a single buffer.
2. For IN transfers, the Transfer Size field in the Endpoint Transfer Size register denotes a payload that constitutes multiple maximum-packet-size packets and a single short packet. This short packet is transmitted at the end of the transfer.
   – To transmit a few maximum-packet-size packets and a short packet at the end of the transfer:

     Transfer size[EPNUM] = x × MPSIZ[EPNUM] + sp

     If (sp > 0), then packet count[EPNUM] = x + 1.
     Otherwise, packet count[EPNUM] = x
   – To transmit a single zero-length data packet:

     Transfer size[EPNUM] = 0

     Packet count[EPNUM] = 1
   – To transmit a few maximum-packet-size packets and a zero-length data packet at the end of the transfer, the application must split the transfer into two parts. The first sends maximum-packet-size data packets and the second sends the zero-length data packet alone.

     First transfer: transfer size[EPNUM] = x × MPSIZ[epnum]; packet count = n;

     Second transfer: transfer size[EPNUM] = 0; packet count = 1;
3. Once an endpoint is enabled for data transfers, the core updates the Transfer size register. At the end of the IN transfer, the application must read the Transfer size register to determine how much data posted in the transmit FIFO have already been sent on the USB.
4. Data fetched into transmit FIFO = Application-programmed initial transfer size – core-updated final transfer size
   – Data transmitted on USB = (application-programmed initial packet count – Core updated final packet count) × MPSIZ[EPNUM]
   – Data yet to be transmitted on USB = (Application-programmed initial transfer size – data transmitted on USB)

Internal data flow:

1. The application must set the transfer size and packet count fields in the endpoint-specific registers and enable the endpoint to transmit the data.
2. The application must also write the required data to the transmit FIFO for the endpoint.
3. Every time a packet is written into the transmit FIFO by the application, the transfer size for that endpoint is decremented by the packet size. The data is fetched from the memory by the application, until the transfer size for the endpoint becomes 0. After writing the data into the FIFO, the “number of packets in FIFO” count is incremented (this is a 3-bit count, internally maintained by the core for each IN endpoint transmit FIFO. The maximum number of packets maintained by the core at any time in an IN endpoint FIFO is eight). For zero-length packets, a separate flag is set for each FIFO, without any data in the FIFO.
4. Once the data are written to the transmit FIFO, the core reads them out upon receiving an IN token. For every nonisochronous IN data packet transmitted with an ACK handshake, the packet count for the endpoint is decremented by one, until the packet count is zero. The packet count is not decremented on a timeout.
5. For zero length packets (indicated by an internal zero length flag), the core sends out a zero-length packet for the IN token and decrements the packet count field.
6. If there are no data in the FIFO for a received IN token and the packet count field for that endpoint is zero, the core generates an “IN token received when TxFIFO is empty” (ITTXFE) Interrupt for the endpoint, provided that the endpoint NAK bit is not set. The core responds with a NAK handshake for nonisochronous endpoints on the USB.
7. The core internally rewinds the FIFO pointers and no timeout interrupt is generated.
8. When the transfer size is 0 and the packet count is 0, the transfer complete (XFRC) interrupt for the endpoint is generated and the endpoint enable is cleared.

Application programming sequence:

1. Program the OTG_HS_DIEPTSIZx register with the transfer size and corresponding packet count.
2. Program the OTG_HS_DIEPCTLx register with the endpoint characteristics and set the CNAK and EPENA (Endpoint Enable) bits.
3. When transmitting nonzero length data packet, the application must poll the OTG_HS_DTXFSTSx register (where x is the FIFO number associated with that endpoint) to determine whether there is enough space in the data FIFO. The application can optionally use TXFE (in OTG_HS_DIEPINTx) before writing the data.

- **Generic periodic IN data transfers**

This section describes a typical periodic IN data transfer.

Application requirements:

1. Application requirements 1, 2, 3, and 4 of *Generic nonperiodic IN data transfers on page 1531* also apply to periodic IN data transfers, except for a slight modification of requirement 2.
   – The application can only transmit multiples of maximum-packet-size data packets or multiples of maximum-packet-size packets, plus a short packet at the end. To

transmit a few maximum-packet-size packets and a short packet at the end of the transfer, the following conditions must be met:

transfer size[EPNUM] = x × MPSIZ[EPNUM] + sp
(where *x* is an integer ≥ 0, and 0 ≤ sp < MPSIZ[EPNUM])

If (sp > 0), packet count[EPNUM] = *x* + 1
Otherwise, packet count[EPNUM] = *x*;

MCNT[EPNUM] = packet count[EPNUM]

– The application cannot transmit a zero-length data packet at the end of a transfer. It can transmit a single zero-length data packet by itself. To transmit a single zero-length data packet:
– transfer size[EPNUM] = 0

  packet count[EPNUM] = 1

  MCNT[EPNUM] = packet count[EPNUM]

2. The application can only schedule data transfers one frame at a time.
   – (MCNT – 1) × MPSIZ ≤ XFERSIZ ≤ MCNT × MPSIZ
   – PKTCNT = MCNT (in OTG_HS_DIEPTSIZx)
   – If XFERSIZ < MCNT × MPSIZ, the last data packet of the transfer is a short packet.
   – Note that: MCNT is in OTG_HS_DIEPTSIZx, MPSIZ is in OTG_HS_DIEPCTLx, PKTCNT is in OTG_HS_DIEPTSIZx and XFERSIZ is in OTG_HS_DIEPTSIZx
3. The complete data to be transmitted in the frame must be written into the transmit FIFO by the application, before the IN token is received. Even when 1 word of the data to be transmitted per frame is missing in the transmit FIFO when the IN token is received, the core behaves as when the FIFO is empty. When the transmit FIFO is empty:
   – A zero data length packet would be transmitted on the USB for isochronous IN endpoints
   – A NAK handshake would be transmitted on the USB for interrupt IN endpoints
4. For a high-bandwidth IN endpoint with three packets in a frame, the application can program the endpoint FIFO size to be 2 × max_pkt_size and have the third packet loaded in after the first packet has been transmitted on the USB.

Internal data flow:

1. The application must set the transfer size and packet count fields in the endpoint-specific registers and enable the endpoint to transmit the data.
2. The application must also write the required data to the associated transmit FIFO for the endpoint.
3. Every time the application writes a packet to the transmit FIFO, the transfer size for that endpoint is decremented by the packet size. The data are fetched from application memory until the transfer size for the endpoint becomes 0.
4. When an IN token is received for a periodic endpoint, the core transmits the data in the FIFO, if available. If the complete data payload (complete packet, in dedicated FIFO

mode) for the frame is not present in the FIFO, then the core generates an IN token received when TxFIFO empty interrupt for the endpoint.

– A zero-length data packet is transmitted on the USB for isochronous IN endpoints
– A NAK handshake is transmitted on the USB for interrupt IN endpoints

5. The packet count for the endpoint is decremented by 1 under the following conditions:
   – For isochronous endpoints, when a zero- or nonzero-length data packet is transmitted
   – For interrupt endpoints, when an ACK handshake is transmitted
   – When the transfer size and packet count are both 0, the transfer completed interrupt for the endpoint is generated and the endpoint enable is cleared.
6. At the “Periodic frame Interval” (controlled by PFIVL in OTG_HS_DCFG), when the core finds nonempty any of the isochronous IN endpoint FIFOs scheduled for the current frame nonempty, the core generates an IISOIXFR interrupt in OTG_HS_GINTSTS.

Application programming sequence:

1. Program the OTG_HS_DIEPCTLx register with the endpoint characteristics and set the CNAK and EPENA bits.
2. Write the data to be transmitted in the next frame to the transmit FIFO.
3. Asserting the ITTXFE interrupt (in OTG_HS_DIEPINTx) indicates that the application has not yet written all data to be transmitted to the transmit FIFO.
4. If the interrupt endpoint is already enabled when this interrupt is detected, ignore the interrupt. If it is not enabled, enable the endpoint so that the data can be transmitted on the next IN token attempt.
5. Asserting the XFRC interrupt (in OTG_HS_DIEPINTx) with no ITTXFE interrupt in OTG_HS_DIEPINTx indicates the successful completion of an isochronous IN transfer. A read to the OTG_HS_DIEPTSIZx register must give transfer size = 0 and packet count = 0, indicating all data were transmitted on the USB.
6. Asserting the XFRC interrupt (in OTG_HS_DIEPINTx), with or without the ITTXFE interrupt (in OTG_HS_DIEPINTx), indicates the successful completion of an interrupt IN transfer. A read to the OTG_HS_DIEPTSIZx register must give transfer size = 0 and packet count = 0, indicating all data were transmitted on the USB.
7. Asserting the incomplete isochronous IN transfer (IISOIXFR) interrupt in OTG_HS_GINTSTS with none of the aforementioned interrupts indicates the core did not receive at least 1 periodic IN token in the current frame.

- **Incomplete isochronous IN data transfers**

This section describes what the application must do on an incomplete isochronous IN data transfer.

Internal data flow:

1. An isochronous IN transfer is treated as incomplete in one of the following conditions:
   a) The core receives a corrupted isochronous IN token on at least one isochronous IN endpoint. In this case, the application detects an incomplete isochronous IN transfer interrupt (IISOIXFR in OTG_HS_GINTSTS).
   b) The application is slow to write the complete data payload to the transmit FIFO and an IN token is received before the complete data payload is written to the FIFO. In this case, the application detects an IN token received when TxFIFO empty interrupt in OTG_HS_DIEPINTx. The application can ignore this interrupt,

as it eventually results in an incomplete isochronous IN transfer interrupt (IISOIXFR in OTG_HS_GINTSTS) at the end of periodic frame.

The core transmits a zero-length data packet on the USB in response to the received IN token.

2. The application must stop writing the data payload to the transmit FIFO as soon as possible.
3. The application must set the NAK bit and the disable bit for the endpoint.
4. The core disables the endpoint, clears the disable bit, and asserts the Endpoint Disable interrupt for the endpoint.

Application programming sequence

1. The application can ignore the IN token received when TxFIFO empty interrupt in OTG_HS_DIEPINTx on any isochronous IN endpoint, as it eventually results in an incomplete isochronous IN transfer interrupt (in OTG_HS_GINTSTS).
2. Assertion of the incomplete isochronous IN transfer interrupt (in OTG_HS_GINTSTS) indicates an incomplete isochronous IN transfer on at least one of the isochronous IN endpoints.
3. The application must read the Endpoint Control register for all isochronous IN endpoints to detect endpoints with incomplete IN data transfers.
4. The application must stop writing data to the Periodic Transmit FIFOs associated with these endpoints on the AHB.
5. Program the following fields in the OTG_HS_DIEPCTLx register to disable the endpoint:
   – SNAK = 1 in OTG_HS_DIEPCTLx
   – EPDIS = 1 in OTG_HS_DIEPCTLx
6. The assertion of the Endpoint Disabled interrupt in OTG_HS_DIEPINTx indicates that the core has disabled the endpoint.
   – At this point, the application must flush the data in the associated transmit FIFO or overwrite the existing data in the FIFO by enabling the endpoint for a new transfer in the next micro-frame. To flush the data, the application must use the OTG_HS_GRSTCTL register.

- **Stalling nonisochronous IN endpoints**

This section describes how the application can stall a nonisochronous endpoint.

Application programming sequence:

1. Disable the IN endpoint to be stalled. Set the STALL bit as well.
2. EPDIS = 1 in OTG_HS_DIEPCTLx, when the endpoint is already enabled
   – STALL = 1 in OTG_HS_DIEPCTLx
   – The STALL bit always takes precedence over the NAK bit
3. Assertion of the Endpoint Disabled interrupt (in OTG_HS_DIEPINTx) indicates to the application that the core has disabled the specified endpoint.
4. The application must flush the nonperiodic or periodic transmit FIFO, depending on the endpoint type. In case of a nonperiodic endpoint, the application must re-enable the other nonperiodic endpoints that do not need to be stalled, to transmit data.
5. Whenever the application is ready to end the STALL handshake for the endpoint, the STALL bit must be cleared in OTG_HS_DIEPCTLx.
6. If the application sets or clears a STALL bit for an endpoint due to a SetFeature.Endpoint Halt command or ClearFeature.Endpoint Halt command, the STALL bit must be set or cleared before the application sets up the Status stage transfer on the control endpoint.

Special case: stalling the control OUT endpoint

The core must stall IN/OUT tokens if, during the data stage of a control transfer, the host sends more IN/OUT tokens than are specified in the SETUP packet. In this case, the application must enable the ITTXFE interrupt in OTG_HS_DIEPINTx and the OTEPDIS interrupt in OTG_HS_DOEPINTx during the data stage of the control transfer, after the core has transferred the amount of data specified in the SETUP packet. Then, when the application receives this interrupt, it must set the STALL bit in the corresponding endpoint control register, and clear this interrupt.

35.13.8 Worst case response time

When the OTG_HS controller acts as a device, there is a worst case response time for any tokens that follow an isochronous OUT. This worst case response time depends on the AHB clock frequency.

The core registers are in the AHB domain, and the core does not accept another token before updating these register values. The worst case is for any token following an isochronous OUT, because for an isochronous transaction, there is no handshake and the next token could come sooner. This worst case value is 7 PHY clocks when the AHB clock is the same as the PHY clock. When the AHB clock is faster, this value is smaller.

If this worst case condition occurs, the core responds to bulk/interrupt tokens with a NAK and drops isochronous and SETUP tokens. The host interprets this as a timeout condition for SETUP and retries the SETUP packet. For isochronous transfers, the Incomplete isochronous IN transfer interrupt (IISOIXFR) and Incomplete isochronous OUT transfer interrupt (IISOOXFR) inform the application that isochronous IN/OUT packets were dropped.

Choosing the value of TRDT in OTG_HS_GUSBCFG

The value in TRDT (OTG_HS_GUSBCFG) is the time it takes for the MAC, in terms of PHY clocks after it has received an IN token, to get the FIFO status, and thus the first data from the PFC block. This time involves the synchronization delay between the PHY and AHB clocks. The worst case delay for this is when the AHB clock is the same as the PHY clock. In this case, the delay is 5 clocks.

Once the MAC receives an IN token, this information (token received) is synchronized to the AHB clock by the PFC (the PFC runs on the AHB clock). The PFC then reads the data from the SPRAM and writes them into the dual clock source buffer. The MAC then reads the data out of the source buffer (4 deep).

If the AHB is running at a higher frequency than the PHY, the application can use a smaller value for TRDT (in OTG_HS_GUSBCFG).

Figure 429 has the following signals:

- tkn_rcvd: Token received information from MAC to PFC
- dynced_tkn_rcvd: Doubled sync tkn_rcvd, from PCLK to HCLK domain
- spr_read: Read to SPRAM
- spr_addr: Address to SPRAM
- spr_rdata: Read data from SPRAM
- srcbuf_push: Push to the source buffer
- srcbuf_rdata: Read data from the source buffer. Data seen by MAC

Refer to *Table 213: TRDT values* for the values of TRDT versus AHB clock frequency.

Figure 429. TRDT max timing case

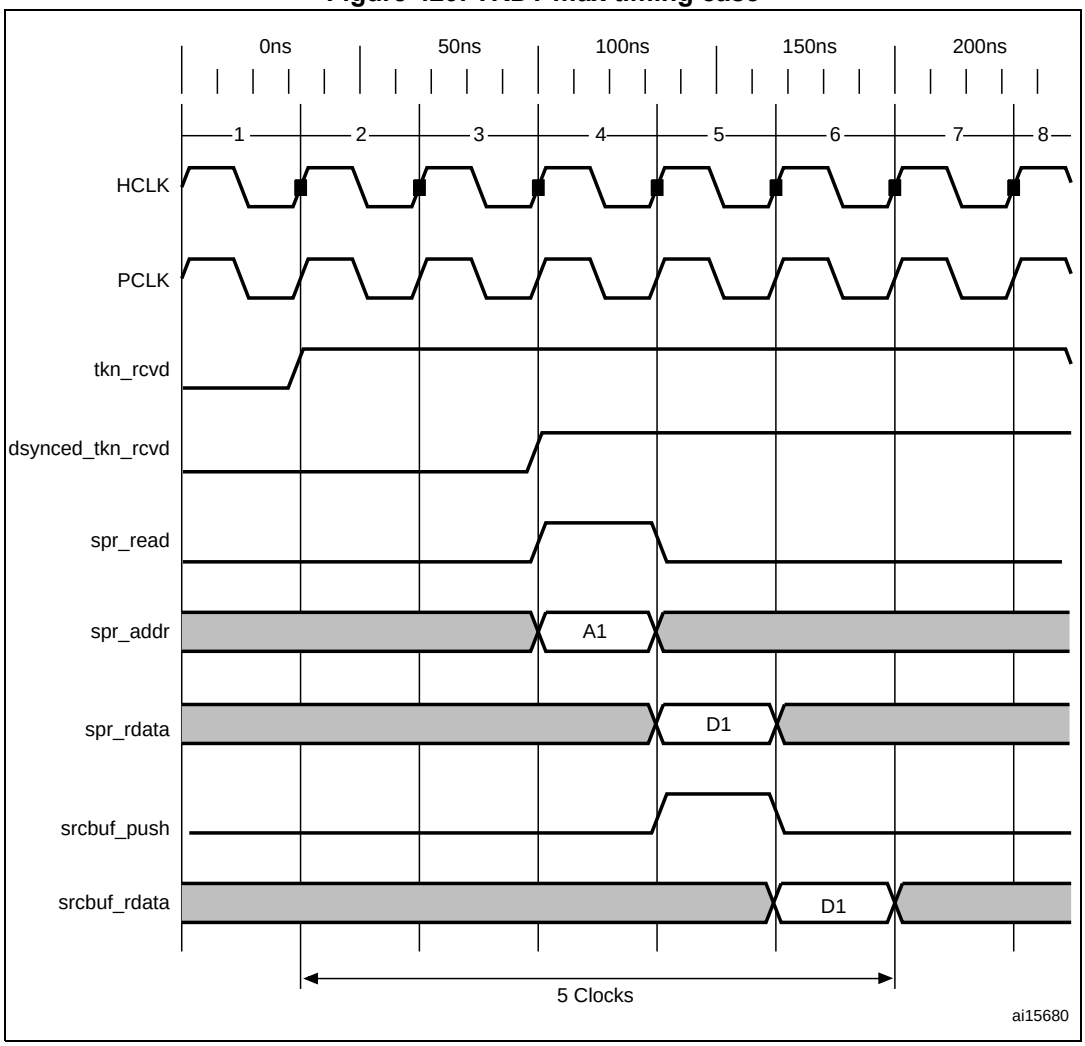

35.13.9 OTG programming model

The OTG_HS controller is an OTG device supporting HNP and SRP. When the core is connected to an “A” plug, it is referred to as an A-device. When the core is connected to a “B” plug it is referred to as a B-device. In host mode, the OTG_HS controller turns off V_{BUS} to conserve power. SRP is a method by which the B-device signals the A-device to turn on V_{BUS} power. A device must perform both data-line pulsing and V_{BUS} pulsing, but a host can detect either data-line pulsing or V_{BUS} pulsing for SRP. HNP is a method by which the B-device negotiates and switches to host role. In Negotiated mode after HNP, the B-device suspends the bus and reverts to the device role.

A-device session request protocol

The application must set the SRP-capable bit in the Core USB configuration register. This enables the OTG_HS controller to detect SRP as an A-device.

Figure 430. A-device SRP

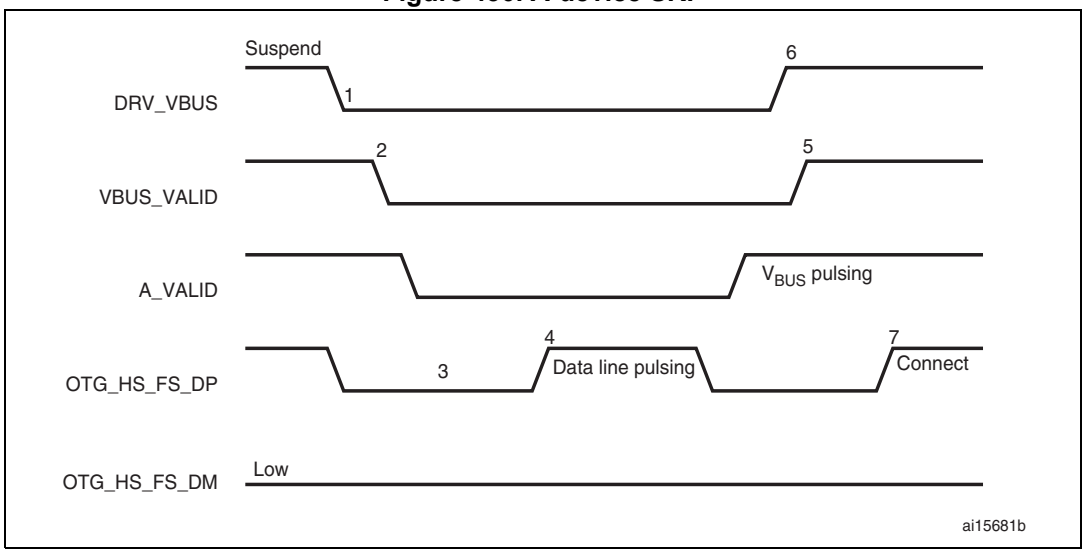

1. DRV_VBUS = V_{BUS} drive signal to the PHY
   VBUS_VALID = V_{BUS} valid signal from PHY
   A_VALID = A-device V_{BUS} level signal to PHY
   DP = Data plus line
   DM = Data minus line

1. To save power, the application suspends and turns off port power when the bus is idle by writing the port suspend and port power bits in the host port control and status register.
2. PHY indicates port power off by deasserting the VBUS_VALID signal.
3. The device must detect SE0 for at least 2 ms to start SRP when V_{BUS} power is off.
4. To initiate SRP, the device turns on its data line pull-up resistor for 5 to 10 ms. The OTG_HS controller detects data-line pulsing.
5. The device drives V_{BUS} above the A-device session valid (2.0 V minimum) for V_{BUS} pulsing.

   The OTG_HS controller interrupts the application on detecting SRP. The Session request detected bit is set in Global interrupt status register (SRQINT set in OTG_HS_GINTSTS).
6. The application must service the Session request detected interrupt and turn on the port power bit by writing the port power bit in the host port control and status register. The PHY indicates port power-on by asserting the VBUS_VALID signal.
7. When the USB is powered, the device connects, completing the SRP process.

B-device session request protocol

The application must set the SRP-capable bit in the Core USB configuration register. This enables the OTG_HS controller to initiate SRP as a B-device. SRP is a means by which the OTG_HS controller can request a new session from the host.

Figure 431. B-device SRP

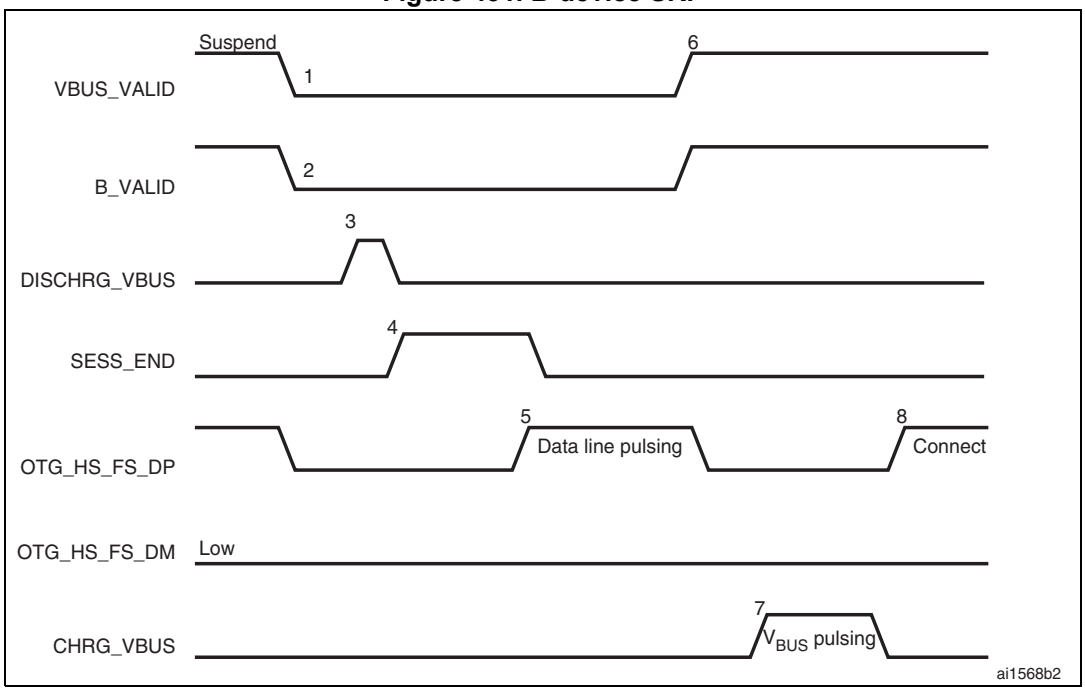

1. VBUS_VALID = V_{BUS} valid signal from PHY
   B_VALID = B-device valid session to PHY
   DISCHRG_VBUS = discharge signal to PHY
   SESS_END = session end signal to PHY
   CHRG_VBUS = charge V_{BUS} signal to PHY
   DP = Data plus line
   DM = Data minus line

1. To save power, the host suspends and turns off port power when the bus is idle.

   The OTG_HS controller sets the early suspend bit in the Core interrupt register after 3 ms of bus idleness. Following this, the OTG_HS controller sets the USB suspend bit in the Core interrupt register.

   The OTG_HS controller informs the PHY to discharge V_{BUS}.
2. The PHY indicates the session's end to the device. This is the initial condition for SRP. The OTG_HS controller requires 2 ms of SE0 before initiating SRP.

   For a USB 1.1 full-speed serial transceiver, the application must wait until V_{BUS} discharges to 0.2 V after BSVLD (in OTG_HS_GOTGCTL) is deasserted. This discharge time can be obtained from the transceiver vendor and varies from one transceiver to another.
3. The USB OTG core informs the PHY to speed up V_{BUS} discharge.
4. The application initiates SRP by writing the session request bit in the OTG Control and status register. The OTG_HS controller perform data-line pulsing followed by V_{BUS} pulsing.
5. The host detects SRP from either the data-line or V_{BUS} pulsing, and turns on V_{BUS}. The PHY indicates V_{BUS} power-on to the device.
6. The OTG_HS controller performs V_{BUS} pulsing.

   The host starts a new session by turning on V_{BUS}, indicating SRP success. The OTG_HS controller interrupts the application by setting the session request success status change bit in the OTG interrupt status register. The application reads the session request success bit in the OTG control and status register.
7. When the USB is powered, the OTG_HS controller connects, completing the SRP process.

A-device host negotiation protocol

HNP switches the USB host role from the A-device to the B-device. The application must set the HNP-capable bit in the Core USB configuration register to enable the OTG_HS controller to perform HNP as an A-device.

Figure 432. A-device HNP

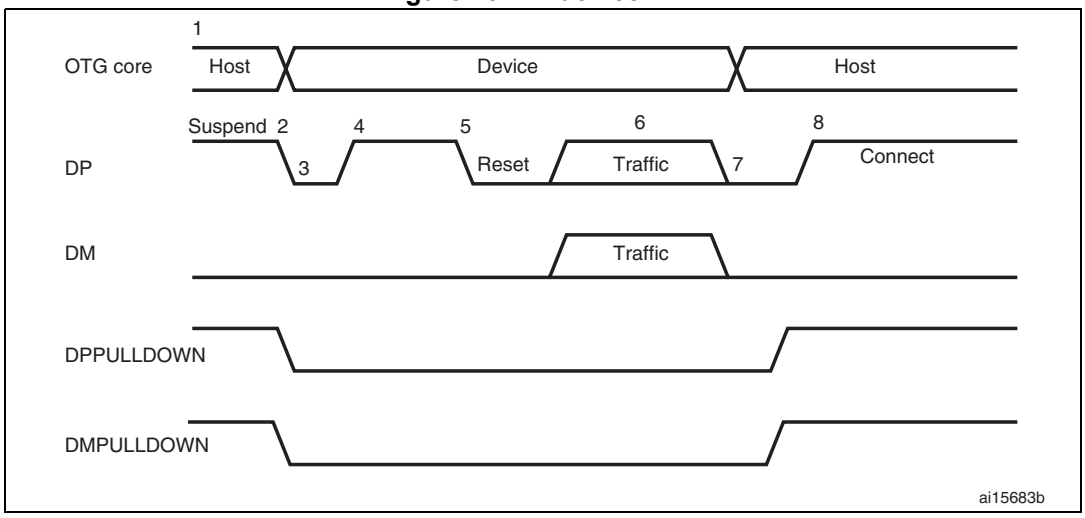

1. DPPULLDOWN = signal from core to PHY to enable/disable the pull-down on the DP line inside the PHY. DMPULLDOWN = signal from core to PHY to enable/disable the pull-down on the DM line inside the PHY.

1. The OTG_HS controller sends the B-device a SetFeature b_hnp_enable descriptor to enable HNP support. The B-device's ACK response indicates that the B-device supports HNP. The application must set host Set HNP Enable bit in the OTG Control and status register to indicate to the OTG_HS controller that the B-device supports HNP.
2. When it has finished using the bus, the application suspends by writing the Port suspend bit in the host port control and status register.
3. When the B-device observes a USB suspend, it disconnects, indicating the initial condition for HNP. The B-device initiates HNP only when it must switch to the host role; otherwise, the bus continues to be suspended.

   The OTG_HS controller sets the host negotiation detected interrupt in the OTG interrupt status register, indicating the start of HNP.

   The OTG_HS controller deasserts the DM pull down and DM pull down in the PHY to indicate a device role. The PHY enables the OTG_HS_DP pull-up resistor to indicate a connect for B-device.

   The application must read the current mode bit in the OTG Control and status register to determine peripheral mode operation.
4. The B-device detects the connection, issues a USB reset, and enumerates the OTG_HS controller for data traffic.
5. The B-device continues the host role, initiating traffic, and suspends the bus when done.

   The OTG_HS controller sets the early suspend bit in the Core interrupt register after 3 ms of bus idleness. Following this, the OTG_HS controller sets the USB Suspend bit in the Core interrupt register.
6. In Negotiated mode, the OTG_HS controller detects the suspend, disconnects, and switches back to the host role. The OTG_HS controller asserts the DM pull down and DM pull down in the PHY to indicate its assumption of the host role.
7. The OTG_HS controller sets the Connector ID status change interrupt in the OTG Interrupt Status register. The application must read the connector ID status in the OTG Control and Status register to determine the OTG_HS controller operation as an A-device. This indicates the completion of HNP to the application. The application must read the Current mode bit in the OTG control and status register to determine host mode operation.
8. The B-device connects, completing the HNP process.

B-device host negotiation protocol

HNP switches the USB host role from B-device to A-device. The application must set the HNP-capable bit in the Core USB configuration register to enable the OTG_HS controller to perform HNP as a B-device.

Figure 433. B-device HNP

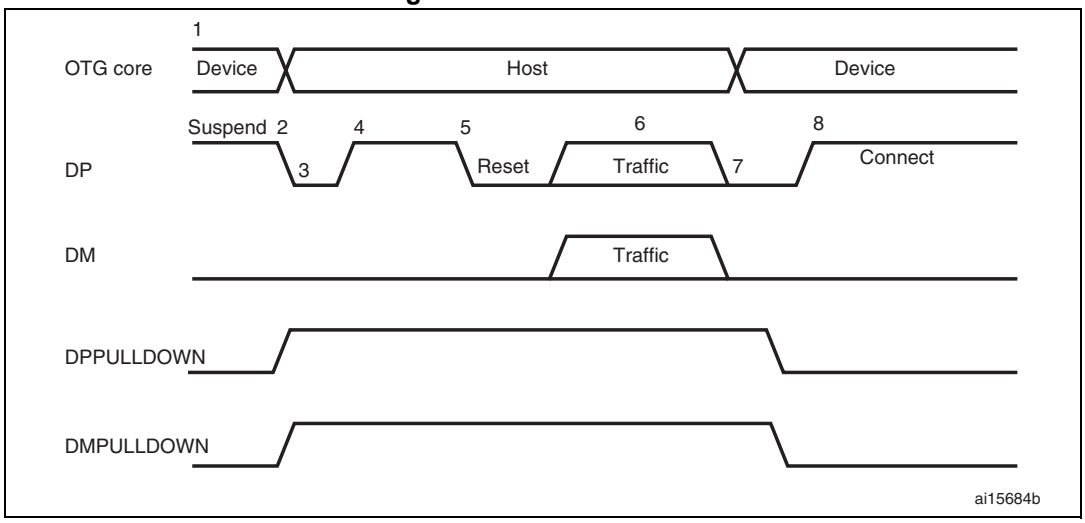

1. DPPULLDOWN = signal from core to PHY to enable/disable the pull-down on the DP line inside the PHY. DMPULLDOWN = signal from core to PHY to enable/disable the pull-down on the DM line inside the PHY.

1. The A-device sends the SetFeature b_hnp_enable descriptor to enable HNP support. The OTG_HS controller's ACK response indicates that it supports HNP. The application must set the Device HNP enable bit in the OTG Control and status register to indicate HNP support.

   The application sets the HNP request bit in the OTG Control and status register to indicate to the OTG_HS controller to initiate HNP.

2. When it has finished using the bus, the A-device suspends by writing the Port suspend bit in the host port control and status register.

   The OTG_HS controller sets the Early suspend bit in the Core interrupt register after 3 ms of bus idleness. Following this, the OTG_HS controller sets the USB suspend bit in the Core interrupt register.

   The OTG_HS controller disconnects and the A-device detects SE0 on the bus, indicating HNP. The OTG_HS controller asserts the DP pull down and DM pull down in the PHY to indicate its assumption of the host role.

   The A-device responds by activating its OTG_HS_DP pull-up resistor within 3 ms of detecting SE0. The OTG_HS controller detects this as a connect.

   The OTG_HS controller sets the host negotiation success status change interrupt in the OTG Interrupt status register, indicating the HNP status. The application must read the host negotiation success bit in the OTG Control and status register to determine

host negotiation success. The application must read the current Mode bit in the Core interrupt register (OTG_HS_GINTSTS) to determine host mode operation.

3. The application sets the reset bit (PRST in OTG_HS_HPRT) and the OTG_HS controller issues a USB reset and enumerates the A-device for data traffic.
4. The OTG_HS controller continues the host role of initiating traffic, and when done, suspends the bus by writing the Port suspend bit in the host port control and status register.
5. In Negotiated mode, when the A-device detects a suspend, it disconnects and switches back to the host role. The OTG_HS controller deasserts the DP pull down and DM pull down in the PHY to indicate the assumption of the device role.
6. The application must read the current mode bit in the Core interrupt (OTG_HS_GINTSTS) register to determine the host mode operation.
7. The OTG_HS controller connects, completing the HNP process.

36 Flexible static memory controller (FSMC)

This section applies to the whole STM32F40x/41x family only.

36.1 FSMC main features

The FSMC block is able to interface with synchronous and asynchronous memories and 16-bit PC memory cards. Its main purpose is to:

- Translate the AHB transactions into the appropriate external device protocol
- Meet the access timing requirements of the external devices

All external memories share the addresses, data and control signals with the controller. Each external device is accessed by means of a unique chip select. The FSMC performs only one access at a time to an external device.

The FSMC has the following main features:

- Interfaces with static memory-mapped devices including:
  - Static random access memory (SRAM)
  - NOR Flash memory/OneNAND Flash memory
  - PSRAM (4 memory banks)
- Two banks of NAND Flash with ECC hardware that checks up to 8 Kbytes of data
- 16-bit PC Card compatible devices
- Supports burst mode access to synchronous devices (NOR Flash and PSRAM)
- 8- or 16-bit wide databus
- Independent chip select control for each memory bank
- Independent configuration for each memory bank
- Programmable timings to support a wide range of devices, in particular:
  - Programmable wait states (up to 15)
  - Programmable bus turnaround cycles (up to 15)
  - Programmable output enable and write enable delays (up to 15)
  - Independent read and write timings and protocol, so as to support the widest variety of memories and timings
- Write enable and byte lane select outputs for use with PSRAM and SRAM devices
- Translation of 32-bit wide AHB transactions into consecutive 16-bit or 8-bit accesses to external 16-bit or 8-bit devices
- A Write FIFO, 2-word long (16-word long for STM32F42x and STM32F43x), each word is 32 bits wide, only stores data and not the address. Therefore, this FIFO only buffers AHB write burst transactions. This makes it possible to write to slow memories and free the AHB quickly for other operations. Only one burst at a time is buffered: if a new AHB burst or single transaction occurs while an operation is in progress, the FIFO is drained. The FSMC will insert wait states until the current memory access is complete.
- External asynchronous wait control

The FSMC registers that define the external device type and associated characteristics are usually set at boot time and do not change until the next reset or power-up. However, it is possible to change the settings at any time.

36.2 Block diagram

The FSMC consists of four main blocks:

- The AHB interface (including the FSMC configuration registers)
- The NOR Flash/PSRAM controller
- The NAND Flash/PC Card controller
- The external device interface

The block diagram is shown in *Figure 434*.

Figure 434. FSMC block diagram

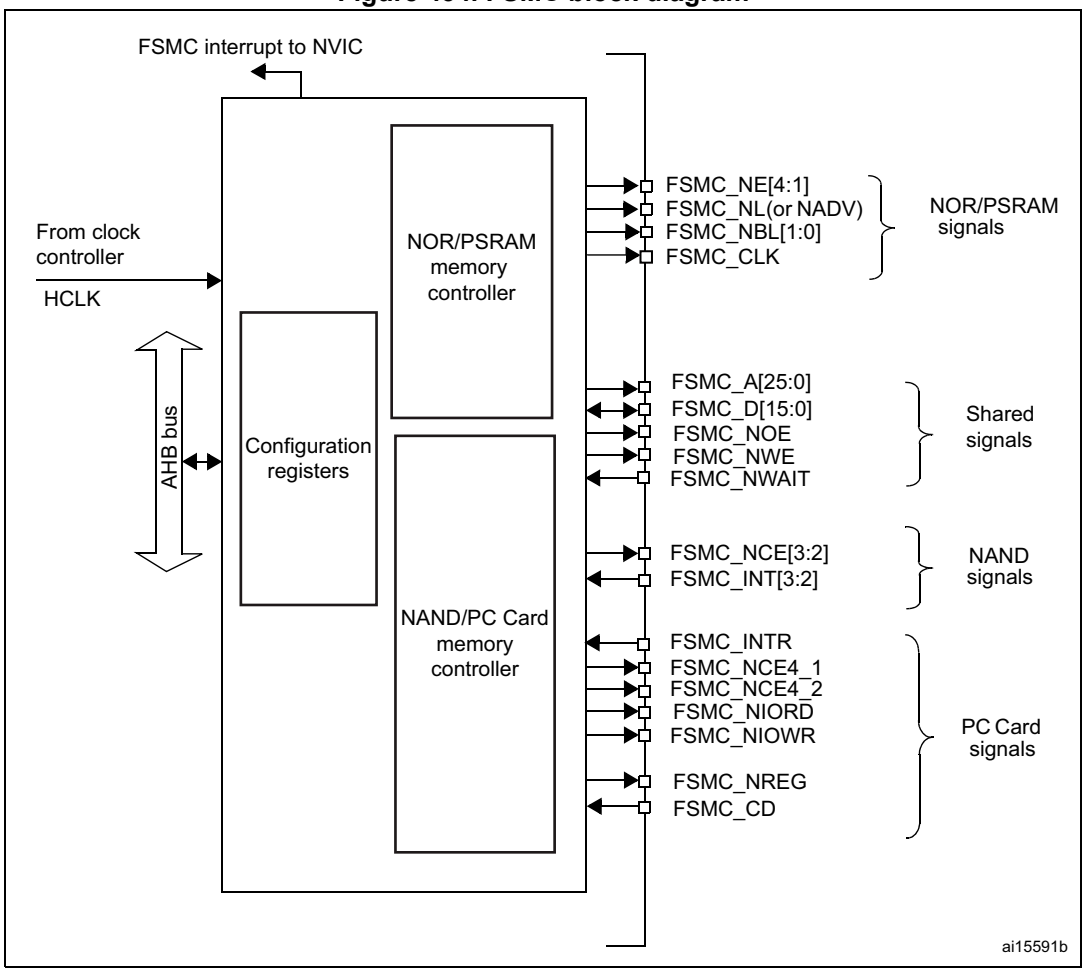

36.3 AHB interface

The AHB slave interface enables internal CPUs and other bus master peripherals to access the external static memories.

AHB transactions are translated into the external device protocol. In particular, if the selected external memory is 16 or 8 bits wide, 32-bit wide transactions on the AHB are split into consecutive 16- or 8-bit accesses. The FSMC Chip Select (FSMC_NEx) does not

toggle between consecutive accesses except when performing accesses in mode D with the extended mode enabled.

The FSMC generates an AHB error in the following conditions:

- When reading or writing to an FSMC bank which is not enabled
- When reading or writing to the NOR Flash bank while the FACCEN bit is reset in the FSMC_BCRx register.
- When reading or writing to the PC Card banks while the input pin FSMC_CD (Card Presence Detection) is low.

The effect of this AHB error depends on the AHB master which has attempted the R/W access:

- If it is the Cortex®-M4 with FPU CPU, a hard fault interrupt is generated
- If is a DMA, a DMA transfer error is generated and the corresponding DMA channel is automatically disabled.

The AHB clock (HCLK) is the reference clock for the FSMC.

36.3.1 Supported memories and transactions

General transaction rules

The requested AHB transaction data size can be 8-, 16- or 32-bit wide whereas the accessed external device has a fixed data width. This may lead to inconsistent transfers.

Therefore, some simple transaction rules must be followed:

- AHB transaction size and memory data size are equal
  There is no issue in this case.
- AHB transaction size is greater than the memory size
  In this case, the FSMC splits the AHB transaction into smaller consecutive memory accesses in order to meet the external data width.
- AHB transaction size is smaller than the memory size
  Asynchronous transfers may or not be consistent depending on the type of external device.
  - Asynchronous accesses to devices that have the byte select feature (SRAM, ROM, PSRAM).

    a) FSMC allows write transactions accessing the right data through its byte lanes NBL[1:0]

    b) Read transactions are allowed. All memory bytes are read and the useless ones are discarded. The NBL[1:0] are kept low during read transactions.
  - Asynchronous accesses to devices that do not have the byte select feature (NOR and NAND Flash 16-bit).
    This situation occurs when a byte access is requested to a 16-bit wide Flash memory. Clearly, the device cannot be accessed in byte mode (only 16-bit words can be read from/written to the Flash memory) therefore:

    a) Write transactions are not allowed

    b) Read transactions are allowed. All memory bytes are read and the useless ones are discarded. The NBL[1:0] are set to 0 during read transactions.

Configuration registers

The FSMC can be configured using a register set. See *Section 36.5.6*, for a detailed description of the NOR Flash/PSRAM control registers. See *Section 36.6.8*, for a detailed description of the NAND Flash/PC Card registers.

36.4 External device address mapping

From the FSMC point of view, the external memory is divided into 4 fixed-size banks of 256 Mbytes each (Refer to *Figure 435*):

- Bank 1 used to address up to 4 NOR Flash or PSRAM memory devices. This bank is split into 4 NOR/PSRAM subbanks with 4 dedicated Chip Selects, as follows:
  - Bank 1 - NOR/PSRAM 1
  - Bank 1 - NOR/PSRAM 2
  - Bank 1 - NOR/PSRAM 3
  - Bank 1 - NOR/PSRAM 4
- Banks 2 and 3 used to address NAND Flash devices (1 device per bank)
- Bank 4 used to address a PC Card device

For each bank the type of memory to be used is user-defined in the Configuration register.

Figure 435. FSMC memory banks

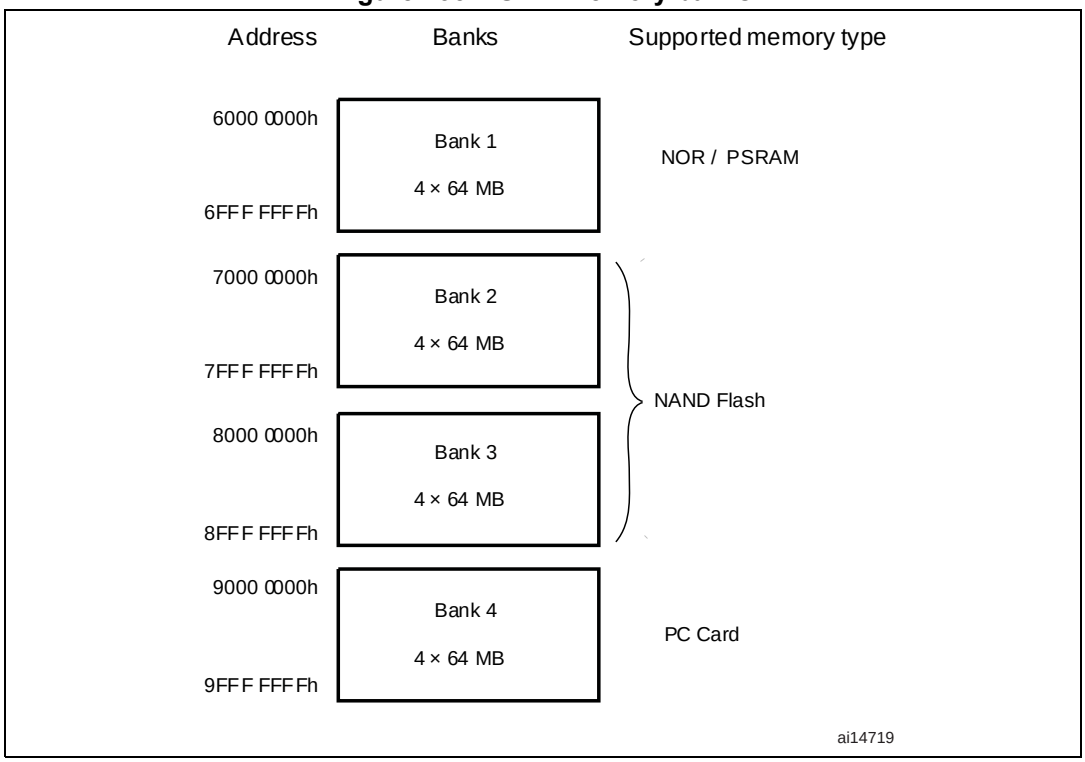

36.4.1 NOR/PSRAM address mapping

HADDR[27:26] bits are used to select one of the four memory banks as shown in *Table 216*.

Table 216. NOR/PSRAM bank selection

HADDR[27:26][1]	Selected bank
00	Bank 1 - NOR/PSRAM 1
01	Bank 1 - NOR/PSRAM 2
10	Bank 1 - NOR/PSRAM 3
11	Bank 1 - NOR/PSRAM 4

1. HADDR are internal AHB address lines that are translated to external memory.

HADDR[25:0] contain the external memory address. Since HADDR is a byte address whereas the memory is addressed in words, the address actually issued to the memory varies according to the memory data width, as shown in the following table.

Table 217. External memory address

Memory width[1]	Data address issued to the memory	Maximum memory capacity (bits)
8-bit	HADDR[25:0]	64 Mbyte x 8 = 512 Mbit
16-bit	HADDR[25:1] >> 1	64 Mbyte/2 x 16 = 512 Mbit

1. In case of a 16-bit external memory width, the FSMC will internally use HADDR[25:1] to generate the address for external memory FSMC_A[24:0].
Whatever the external memory width (16-bit or 8-bit), FSMC_A[0] should be connected to external memory address A[0].

Wrap support for NOR Flash/PSRAM

Wrap burst mode for synchronous memories is not supported. The memories must be configured in linear burst mode of undefined length.

36.4.2 NAND/PC Card address mapping

In this case, three banks are available, each of them divided into memory spaces as indicated in *Table 218*.

Table 218. Memory mapping and timing registers

Start address	End address	FSMC Bank	Memory space	Timing register
0x9C00 0000	0x9FFF FFFF	Bank 4 - PC card	I/O	FSMC_PIO4 (0xB0)
0x9800 0000	0x9BFF FFFF		Attribute	FSMC_PATT4 (0xAC)
0x9000 0000	0x93FF FFFF		Common	FSMC_PMEM4 (0xA8)
0x8800 0000	0x8BFF FFFF	Bank 3 - NAND Flash	Attribute	FSMC_PATT3 (0x8C)
0x8000 0000	0x83FF FFFF		Common	FSMC_PMEM3 (0x88)
0x7800 0000	0x7BFF FFFF	Bank 2- NAND Flash	Attribute	FSMC_PATT2 (0x6C)
0x7000 0000	0x73FF FFFF		Common	FSMC_PMEM2 (0x68)

For NAND Flash memory, the common and attribute memory spaces are subdivided into three sections (see in *Table 219* below) located in the lower 256 Kbytes:

- Data section (first 64 Kbytes in the common/attribute memory space)
- Command section (second 64 Kbytes in the common / attribute memory space)
- Address section (next 128 Kbytes in the common / attribute memory space)

Table 219. NAND bank selections

Section name	HADDR[17:16]	Address range
Address section	1X	0x020000-0x03FFFF
Command section	01	0x010000-0x01FFFF
Data section	00	0x000000-0x0FFFF

The application software uses the 3 sections to access the NAND Flash memory:

- **To send a command to NAND Flash memory**: the software must write the command value to any memory location in the command section.
- **To specify the NAND Flash address that must be read or written**: the software must write the address value to any memory location in the address section. Since an address can be 4 or 5 bytes long (depending on the actual memory size), several consecutive writes to the address section are needed to specify the full address.
- **To read or write data**: the software reads or writes the data value from or to any memory location in the data section.

Since the NAND Flash memory automatically increments addresses, there is no need to increment the address of the data section to access consecutive memory locations.

36.5 NOR Flash/PSRAM controller

The FSMC generates the appropriate signal timings to drive the following types of memories:

- Asynchronous SRAM and ROM
  - 8-bit
  - 16-bit
  - 32-bit
- PSRAM (Cellular RAM)
  - Asynchronous mode
  - Burst mode for synchronous accesses
  - Multiplexed or nonmultiplexed
- NOR Flash
  - Asynchronous mode
  - Burst mode for synchronous accesses
  - Multiplexed or nonmultiplexed

The FSMC outputs a unique chip select signal NE[4:1] per bank. All the other signals (addresses, data and control) are shared.

For synchronous accesses, the FSMC issues the clock (CLK) to the selected external device only during the read/write transactions. This clock is a submultiple of the HCLK clock. The size of each bank is fixed and equal to 64 Mbytes.

Each bank is configured by means of dedicated registers (see *Section 36.5.6*).

The programmable memory parameters include access timings (see *Table 220*) and support for wait management (for PSRAM and NOR Flash accessed in burst mode).

Table 220. Programmable NOR/PSRAM access parameters

Parameter	Function	Access mode	Unit	Min.	Max.
Address setup	Duration of the address setup phase	Asynchronous	AHB clock cycle (HCLK)	0	15
Address hold	Duration of the address hold phase	Asynchronous, muxed I/Os	AHB clock cycle (HCLK)	1	15
Data setup	Duration of the data setup phase	Asynchronous	AHB clock cycle (HCLK)	1	256
Bus turn	Duration of the bus turnaround phase	Asynchronous and synchronous read/write	AHB clock cycle (HCLK)	0	15
Clock divide ratio	Number of AHB clock cycles (HCLK) to build one memory clock cycle (CLK)	Synchronous	AHB clock cycle (HCLK)	2	16
Data latency	Number of clock cycles to issue to the memory before the first data of the burst	Synchronous	Memory clock cycle (CLK)	2	17

36.5.1 External memory interface signals

Table 221, *Table 222* and *Table 223* list the signals that are typically used to interface NOR Flash, SRAM and PSRAM.

Note: Prefix "N". specifies the associated signal as active low.

NOR Flash, nonmultiplexed I/Os

Table 221. Nonmultiplexed I/O NOR Flash

FSMC signal name	I/O	Function
CLK	O	Clock (for synchronous access)
A[25:0]	O	Address bus
D[15:0]	I/O	Bidirectional data bus
NE[x]	O	Chip select, x = 1..4
NOE	O	Output enable
NWE	O	Write enable
NL(=NADV)	O	Latch enable (this signal is called address valid, NADV, by some NOR Flash devices)
NWAIT	I	NOR Flash wait input signal to the FSMC

NOR Flash memories are addressed in 16-bit words. The maximum capacity is 512 Mbit (26 address lines).

NOR Flash, multiplexed I/Os

Table 222. Multiplexed I/O NOR Flash

FSMC signal name	I/O	Function
CLK	O	Clock (for synchronous access)
A[25:16]	O	Address bus
AD[15:0]	I/O	16-bit multiplexed, bidirectional address/data bus
NE[x]	O	Chip select, x = 1..4
NOE	O	Output enable
NWE	O	Write enable
NL(=NADV)	O	Latch enable (this signal is called address valid, NADV, by some NOR Flash devices)
NWAIT	I	NOR Flash wait input signal to the FSMC

NOR-Flash memories are addressed in 16-bit words. The maximum capacity is 512 Mbit (26 address lines).

PSRAM/SRAM, nonmultiplexed I/Os

Table 223. Nonmultiplexed I/Os PSRAM/SRAM

FSMC signal name	I/O	Function
CLK	O	Clock (only for PSRAM synchronous access)
A[25:0]	O	Address bus
D[15:0]	I/O	Data bidirectional bus
NE[x]	O	Chip select, x = 1..4 (called NCE by PSRAM (Cellular RAM i.e. CRAM))
NOE	O	Output enable
NWE	O	Write enable
NL(= NADV)	O	Address valid only for PSRAM input (memory signal name: NADV)
NWAIT	I	PSRAM wait input signal to the FSMC
NBL[1]	O	Upper byte enable (memory signal name: NUB)
NBL[0]	O	Lowed byte enable (memory signal name: NLB)

PSRAM memories are addressed in 16-bit words. The maximum capacity is 512 Mbit (26 address lines).

PSRAM, multiplexed I/Os

Table 224. Multiplexed I/O PSRAM

FSMC signal name	I/O	Function
CLK	O	Clock (for synchronous access)
A[25:16]	O	Address bus
AD[15:0]	I/O	16-bit multiplexed, bidirectional address/data bus
NE[x]	O	Chip select, x = 1..4 (called NCE by PSRAM (Cellular RAM i.e. CRAM))
NOE	O	Output enable
NWE	O	Write enable
NL(= NADV)	O	Address valid PSRAM input (memory signal name: NADV)
NWAIT	I	PSRAM wait input signal to the FSMC
NBL[1]	O	Upper byte enable (memory signal name: NUB)
NBL[0]	O	Lowed byte enable (memory signal name: NLB)

PSRAM memories are addressed in 16-bit words. The maximum capacity is 512 Mbit (26 address lines).

36.5.2 Supported memories and transactions

Table 225 below displays an example of the supported devices, access modes and transactions when the memory data bus is 16-bit for NOR, PSRAM and SRAM. Transactions not allowed (or not supported) by the FSMC in this example appear in gray.

Table 225. NOR Flash/PSRAM controller: example of supported memories and transactions

Device	Mode	R/W	AHB data size	Memory data size	Allowed/ not allowed	Comments
NOR Flash (muxed I/Os and nonmuxed I/Os)	Asynchronous	R	8	16	Y	-
	Asynchronous	W	8	16	N	-
	Asynchronous	R	16	16	Y	-
	Asynchronous	W	16	16	Y	-
	Asynchronous	R	32	16	Y	Split into two FSMC accesses
	Asynchronous	W	32	16	Y	Split into two FSMC accesses
	Asynchronous page	R	-	16	N	Mode is not supported
	Synchronous	R	8	16	N	-
	Synchronous	R	16	16	Y	-
	Synchronous	R	32	16	Y	-

Table 225. NOR Flash/PSRAM controller: example of supported memories and transactions

Device	Mode	R/W	AHB data size	Memory data size	Allowed/ not allowed	Comments
PSRAM (multiplexed and nonmultiplexed I/Os)	Asynchronous	R	8	16	Y	-
	Asynchronous	W	8	16	Y	Use of byte lanes NBL[1:0]
	Asynchronous	R	16	16	Y	-
	Asynchronous	W	16	16	Y	-
	Asynchronous	R	32	16	Y	Split into two FSMC accesses
	Asynchronous	W	32	16	Y	Split into two FSMC accesses
	Asynchronous page	R	-	16	N	Mode is not supported
	Synchronous	R	8	16	N	-
	Synchronous	R	16	16	Y	-
	Synchronous	R	32	16	Y	-
	Synchronous	W	8	16	Y	Use of byte lanes NBL[1:0]
	Synchronous	W	16 / 32	16	Y	-
SRAM and ROM	Asynchronous	R	8 / 16	16	Y	-
	Asynchronous	W	8 / 16	16	Y	Use of byte lanes NBL[1:0]
	Asynchronous	R	32	16	Y	Split into two FSMC accesses
	Asynchronous	W	32	16	Y	Split into two FSMC accesses. Use of byte lanes NBL[1:0]

36.5.3 General timing rules

Signals synchronization

- All controller output signals change on the rising edge of the internal clock (HCLK)
- In synchronous mode (read or write), all output signals change on the rising edge of HCLK. Whatever the CLKDIV value, all outputs change as follows:
  - NOEL/NWEL/ NEL/NADVL/ NADVH /NBLL/ Address valid outputs change on the falling edge of FSMC_CLK clock.
  - NOEH/ NWEH / NEH/ NOEH/NBLH/ Address invalid outputs change on the rising edge of FSMC_CLK clock.

36.5.4 NOR Flash/PSRAM controller asynchronous transactions

Asynchronous static memories (NOR Flash memory, PSRAM, SRAM)

- Signals are synchronized by the internal clock HCLK. This clock is not issued to the memory
- The FSMC always samples the data before de-asserting the NOE signals. This guarantees that the memory data-hold timing constraint is met (chip enable high to data transition, usually 0 ns min.)
- If the extended mode is enabled (EXTMOD bit is set in the FSMC_BCRx register), up to four extended modes (A, B, C and D) are available. It is possible to mix A, B, C and D modes for read and write operations. For example, read operation can be performed in mode A and write in mode B.
- If the extended mode is disabled (EXTMOD bit is reset in the FSMC_BCRx register), the FSMC can operate in Mode1 or Mode2 as follows:
  - Mode 1 is the default mode when SRAM/PSRAM memory type is selected (MTYP[0:1] = 0x0 or 0x01 in the FSMC_BCRx register)
  - Mode 2 is the default mode when NOR memory type is selected (MTYP[0:1] = 0x10 in the FSMC_BCRx register).

Mode 1 - SRAM/PSRAM (CRAM)

The next figures show the read and write transactions for the supported modes followed by the required configuration of FSMC _BCRx, and FSMC_BTRx/FSMC_BWTRx registers.

Figure 436. Mode1 read accesses

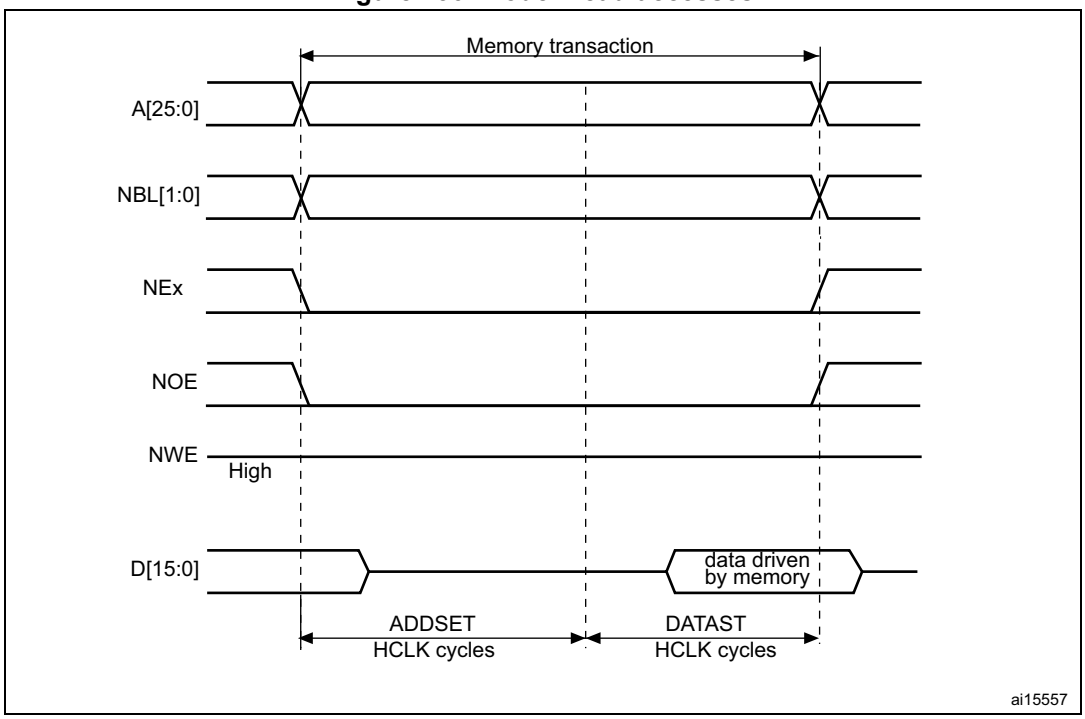

1. NBL[1:0] are driven low during read access.

Figure 437. Mode1 write accesses

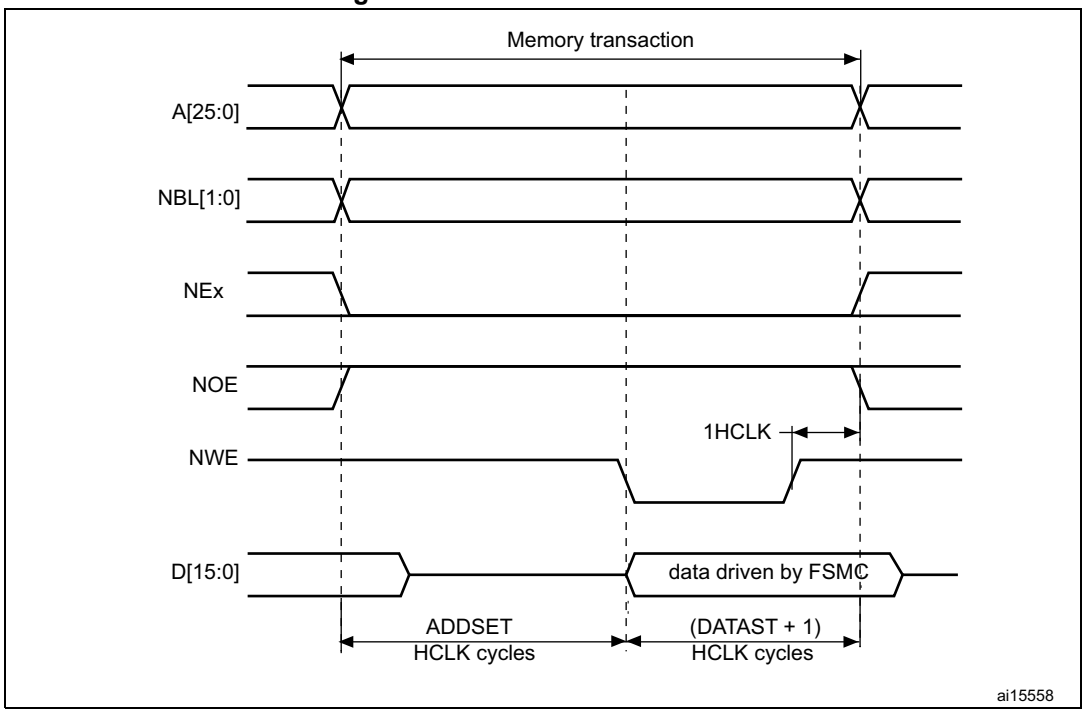

The one HCLK cycle at the end of the write transaction helps guarantee the address and data hold time after the NWE rising edge. Due to the presence of this one HCLK cycle, the DATAST value must be greater than zero (DATAST > 0).

Table 226. FSMC_BCRx bit fields

Bit number	Bit name	Value to set
31-20	Reserved	0x000
19	CBURSTRW	0x0 (no effect on asynchronous mode)
18:16	CPSIZE	0x0 (no effect on asynchronous mode)
15	ASYNCWAIT	Set to 1 if the memory supports this feature. Otherwise keep at 0.
14	EXTMOD	0x0
13	WAITEN	0x0 (no effect on asynchronous mode)
12	WREN	As needed
11	WAITCFG	Don’t care
10	WRAPMOD	0x0
9	WAITPOL	Meaningful only if bit 15 is 1
8	BURSTEN	0x0
7	Reserved	0x1
6	FACCEN	Don’t care
5-4	MWID	As needed
3-2	MTYP[0:1]	As needed, exclude 0x2 (NOR Flash)

Table 226. FSMC_BCRx bit fields (continued)

Bit number	Bit name	Value to set
1	MUXE	0x0
0	MBKEN	0x1

Table 227. FSMC_BTRx bit fields

Bit number	Bit name	Value to set
31:30	Reserved	0x0
29-28	ACCMOD	Don't care
27-24	DATLAT	Don't care
23-20	CLKDIV	Don't care
19-16	BUSTURN	Time between NEx high to NEx low (BUSTURN HCLK)
15-8	DATAST	Duration of the second access phase (DATAST+1 HCLK cycles for write accesses, DATAST HCLK cycles for read accesses).
7-4	ADDHLD	Don't care
3-0	ADDSET[3:0]	Duration of the first access phase (ADDSET HCLK cycles). Minimum value for ADDSET is 0.

Mode A - SRAM/PSRAM (CRAM) OE toggling

Figure 438. ModeA read accesses

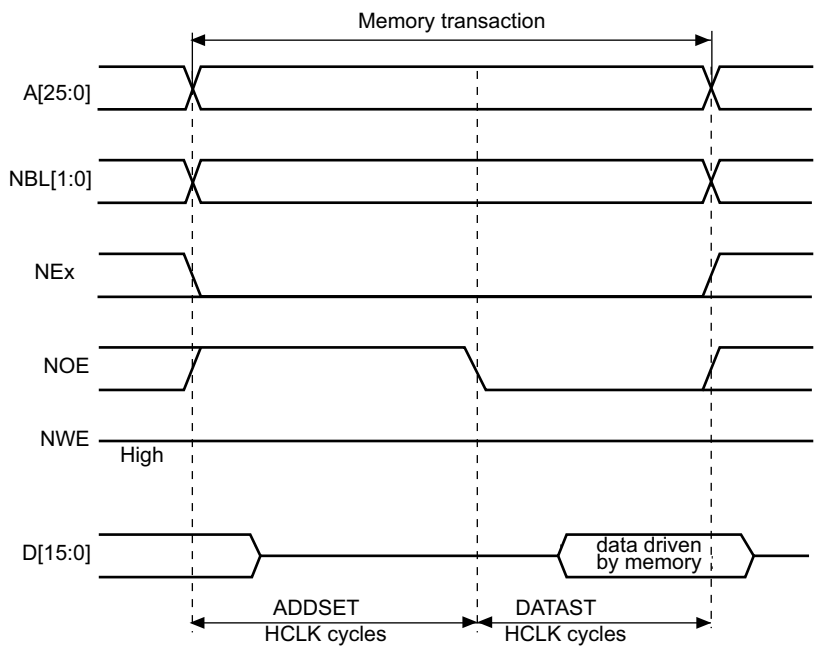

1. NBL[1:0] are driven low during read access.

Figure 439. ModeA write accesses

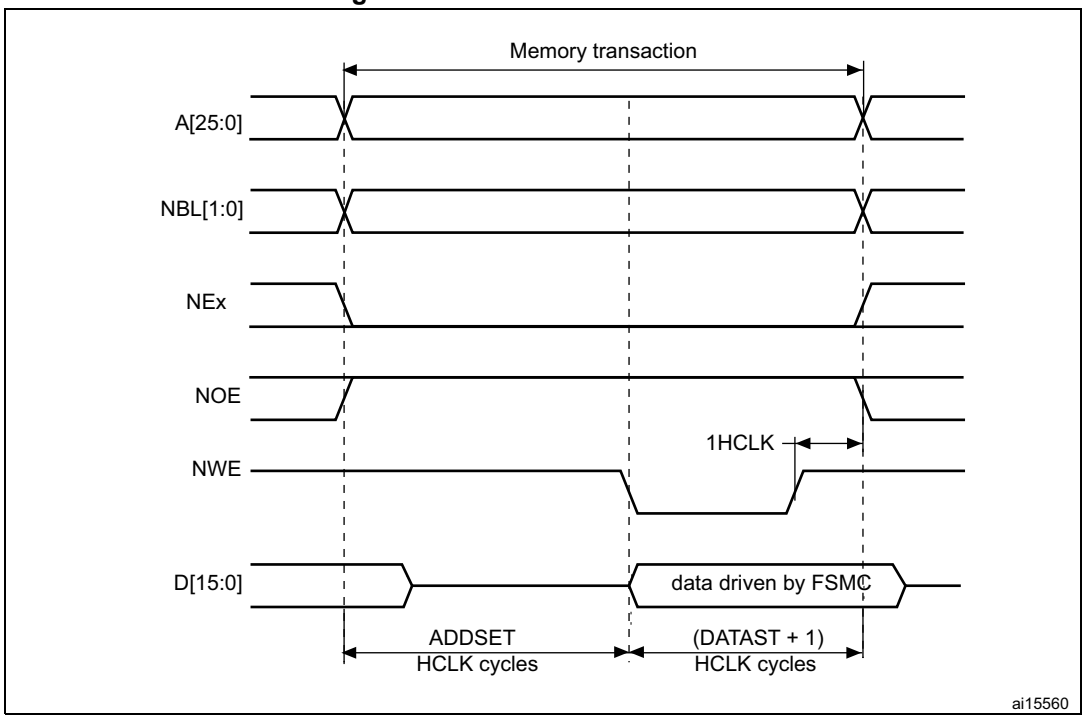

The differences compared with mode1 are the toggling of NOE and the independent read and write timings.

Table 228. FSMC_BCRx bit fields

Bit number	Bit name	Value to set
31-20	Reserved	0x000
19	CBURSTRW	0x0 (no effect on asynchronous mode)
18:16	CPSIZE	0x0 (no effect on asynchronous mode)
15	ASYNCWAIT	Set to 1 if the memory supports this feature. Otherwise keep at 0.
14	EXTMOD	0x1
13	WAITEN	0x0 (no effect on asynchronous mode)
12	WREN	As needed
11	WAITCFG	Don’t care
10	WRAPMOD	0x0
9	WAITPOL	Meaningful only if bit 15 is 1
8	BURSTEN	0x0
7	Reserved	0x1
6	FACCEN	Don’t care
5-4	MWID	As needed
3-2	MTYP[0:1]	As needed, exclude 0x2 (NOR Flash)

Table 228. FSMC_BCRx bit fields (continued)

Bit number	Bit name	Value to set
1	MUXEN	0x0
0	MBKEN	0x1

Table 229. FSMC_BTRx bit fields

Bit number	Bit name	Value to set
31:30	Reserved	0x0
29-28	ACCMOD	0x0
27-24	DATLAT	Don't care
23-20	CLKDIV	Don't care
19-16	BUSTURN	Time between NEx high to NEx low (BUSTURN HCLK)
15-8	DATAST	Duration of the second access phase (DATAST HCLK cycles) for read accesses.
7-4	ADDHLD	Don't care
3-0	ADDSET[3:0]	Duration of the first access phase (ADDSET HCLK cycles) for read accesses. Minimum value for ADDSET is 0.

Table 230. FSMC_BWTRx bit fields

Bit number	Bit name	Value to set
31:30	Reserved	0x0
29-28	ACCMOD	0x0
27-24	DATLAT	Don't care
23-20	CLKDIV	Don't care
19-16	BUSTURN	Time between NEx high to NEx low (BUSTURN HCLK)
15-8	DATAST	Duration of the second access phase (DATAST+1 HCLK cycles for write accesses,
7-4	ADDHLD	Don't care
3-0	ADDSET[3:0]	Duration of the first access phase (ADDSET HCLK cycles) for write accesses. Minimum value for ADDSET is 0.

Mode 2/B - NOR Flash

Figure 440. Mode2 and mode B read accesses

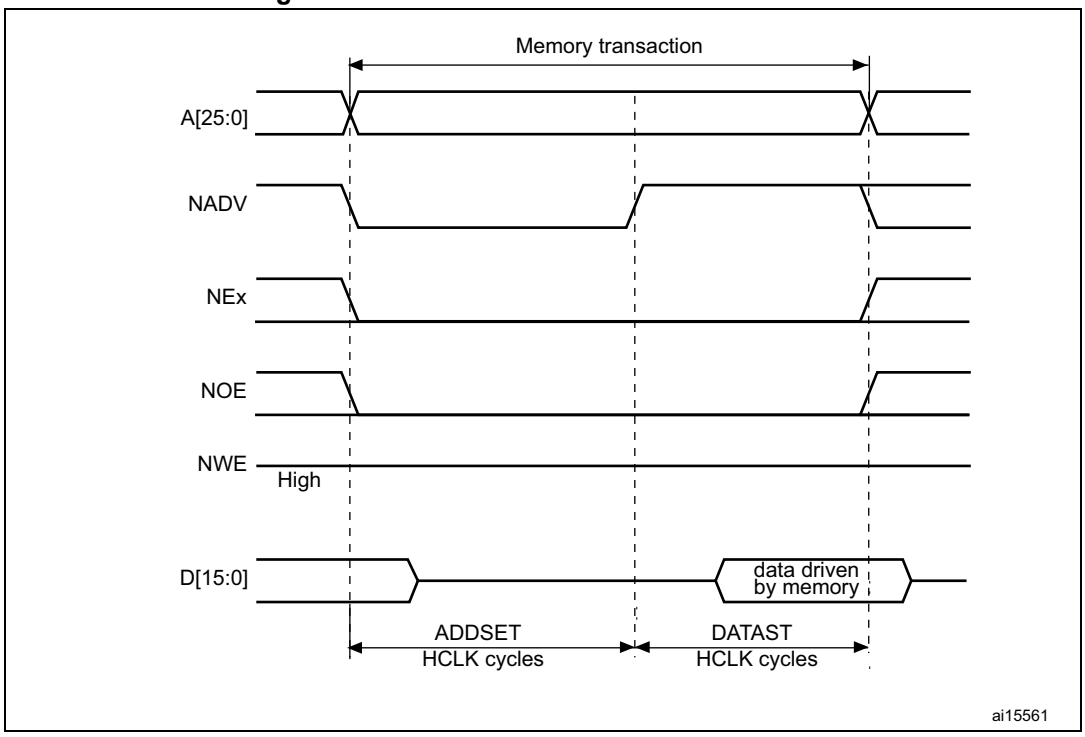

Figure 441. Mode2 write accesses

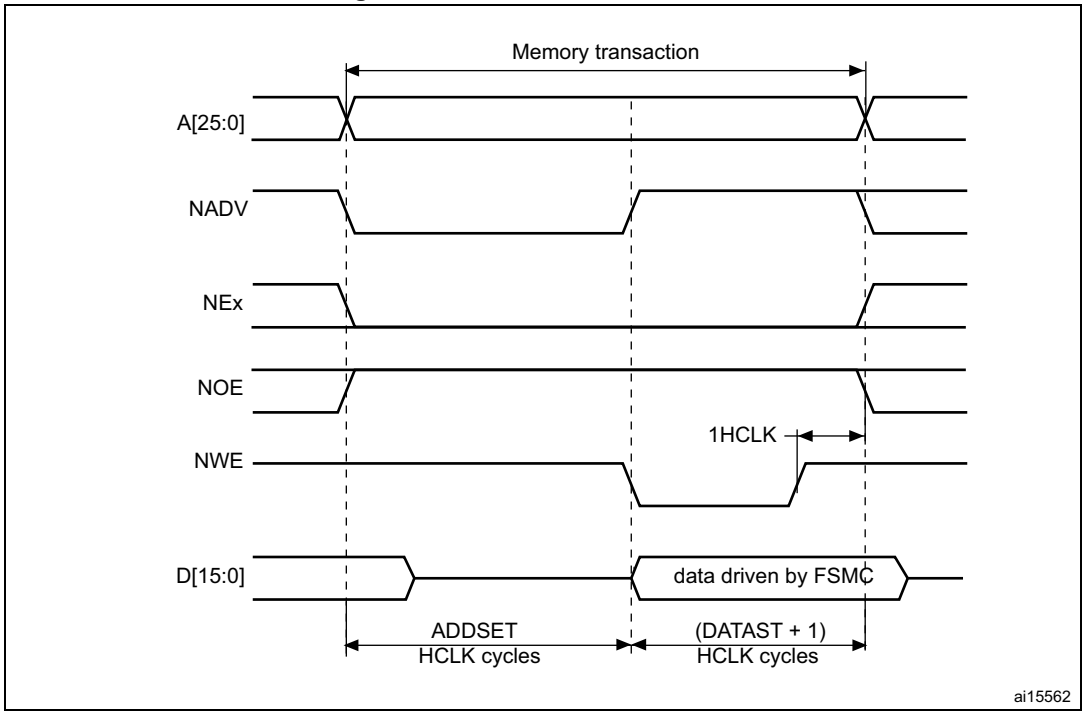

Figure 442. Mode B write accesses

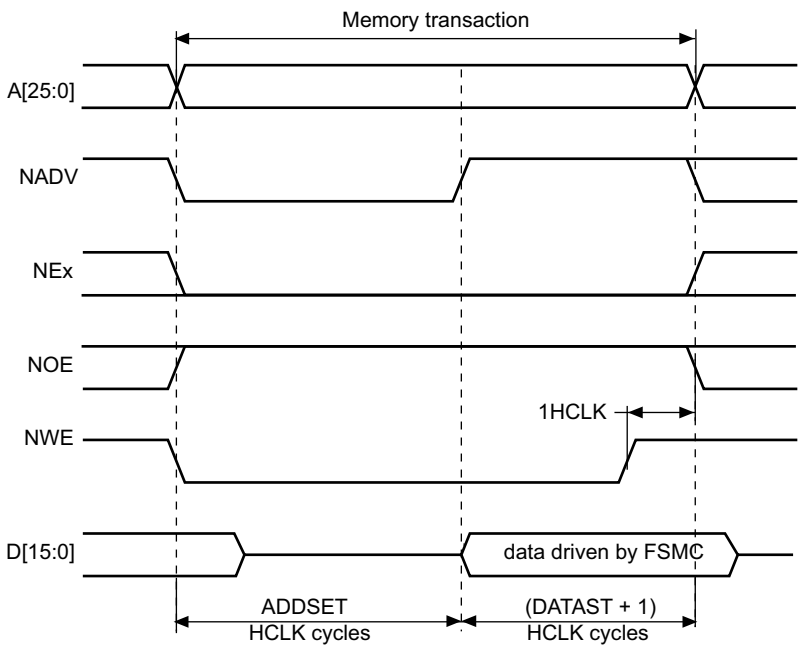

The differences with mode1 are the toggling of NWE and the independent read and write timings when extended mode is set (Mode B).

Table 231. FSMC_BCRx bit fields

Bit number	Bit name	Value to set
31-20	Reserved	0x000
19	CBURSTRW	0x0 (no effect on asynchronous mode)
18:16	Reserved	0x0 (no effect on asynchronous mode)
15	ASYNCWAIT	Set to 1 if the memory supports this feature. Otherwise keep at 0.
14	EXTMOD	0x1 for mode B, 0x0 for mode 2
13	WAITEN	0x0 (no effect on asynchronous mode)
12	WREN	As needed
11	WAITCFG	Don’t care
10	WRAPMOD	0x0
9	WAITPOL	Meaningful only if bit 15 is 1
8	BURSTEN	0x0
7	Reserved	0x1
6	FACCEN	0x1
5-4	MWID	As needed

Table 231. FSMC_BCRx bit fields (continued)

Bit number	Bit name	Value to set
3-2	MTYP[0:1]	0x2 (NOR Flash memory)
1	MUXEN	0x0
0	MBKEN	0x1

Table 232. FSMC_BTRx bit fields

Bit number	Bit name	Value to set
31:30	Reserved	0x0
29-28	ACCMOD	0x1
27-24	DATLAT	Don’t care
23-20	CLKDIV	Don’t care
19-16	BUSTURN	Time between NEx high to NEx low (BUSTURN HCLK)
15-8	DATAST	Duration of the second access phase (DATAST HCLK cycles) for read accesses.
7-4	ADDHLD	Don’t care
3-0	ADDSET[3:0]	Duration of the first access phase (ADDSET HCLK cycles) for read accesses. Minimum value for ADDSET is 0.

Table 233. FSMC_BWTRx bit fields

Bit number	Bit name	Value to set
31:30	Reserved	0x0
29-28	ACCMOD	0x1
27-24	DATLAT	Don’t care
23-20	CLKDIV	Don’t care
19-16	BUSTURN	Time between NEx high to NEx low (BUSTURN HCLK)
15-8	DATAST	Duration of the second access phase (DATAST+1 HCLK cycles for write accesses,
7-4	ADDHLD	Don’t care
3-0	ADDSET[3:0]	Duration of the first access phase (ADDSET HCLK cycles) for write accesses. Minimum value for ADDSET is 0.

Note: The FSMC_BWTRx register is valid only if extended mode is set (mode B), otherwise all its content is don’t care.

Mode C - NOR Flash - OE toggling

Figure 443. Mode C read accesses

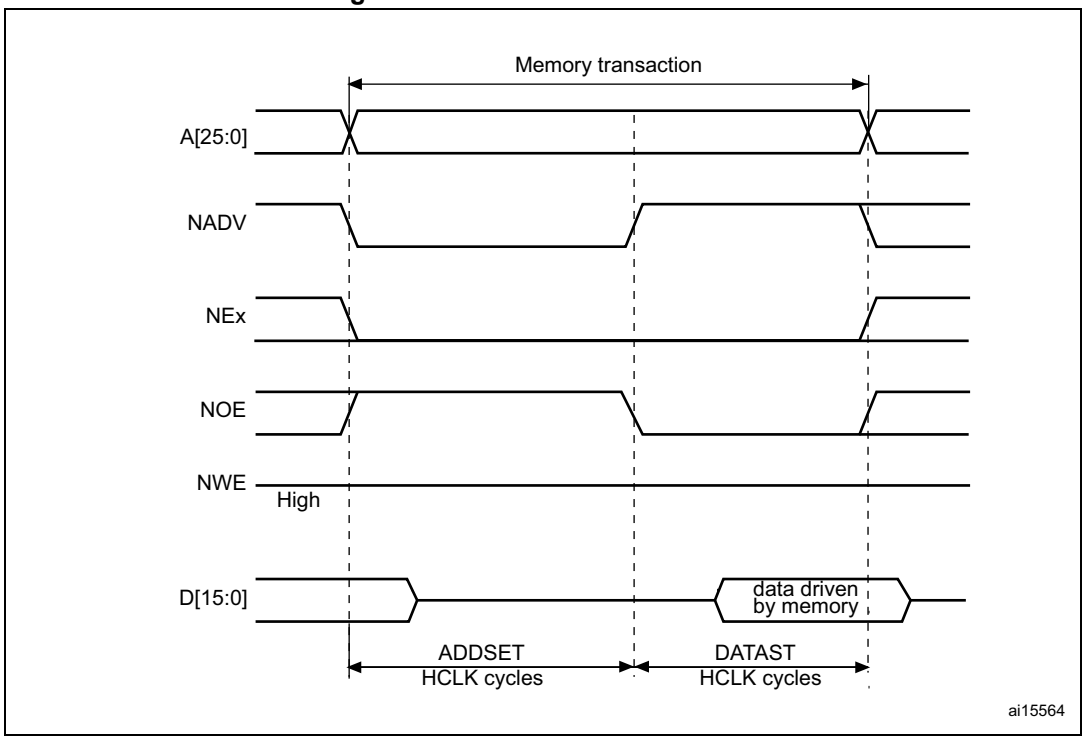

Figure 444. Mode C write accesses

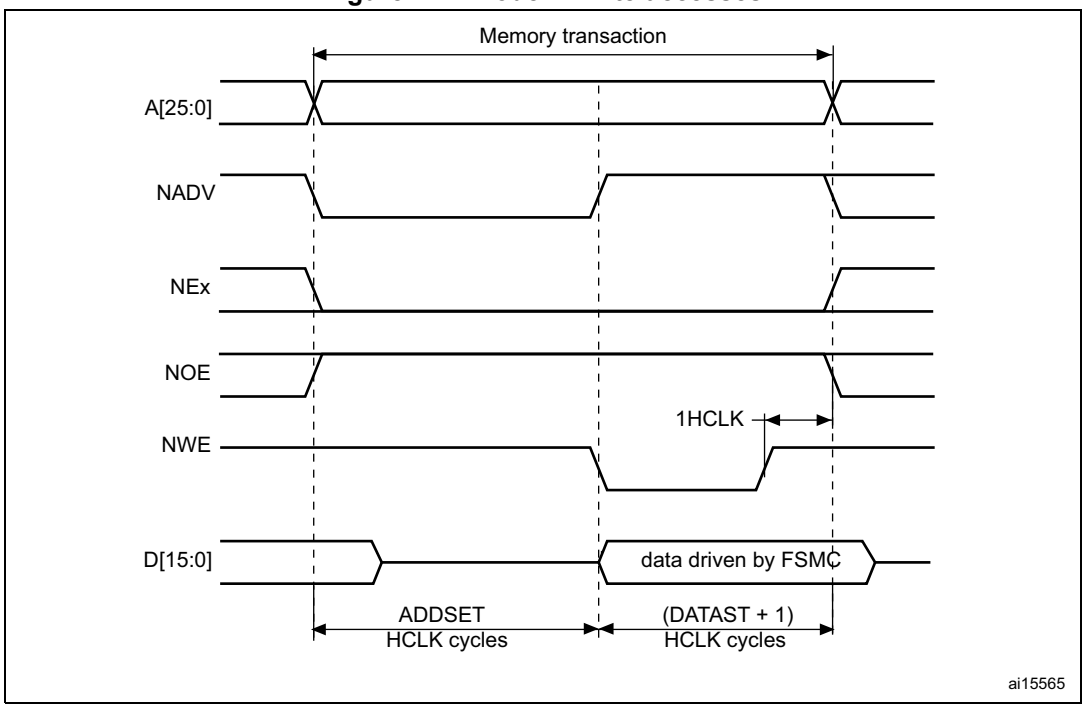

The differences compared with mode1 are the toggling of NOE and the independent read and write timings.

Table 234. FSMC_BCRx bit fields

Bit No.	Bit name	Value to set
31-20	Reserved	0x000
19	CBURSTRW	0x0 (no effect on asynchronous mode)
18:16	CPSIZE	0x0 (no effect on asynchronous mode)
15	ASYNCWAIT	Set to 1 if the memory supports this feature. Otherwise keep at 0.
14	EXTMOD	0x1
13	WAITEN	0x0 (no effect on asynchronous mode)
12	WREN	As needed
11	WAITCFG	Don’t care
10	WRAPMOD	0x0
9	WAITPOL	Meaningful only if bit 15 is 1
8	BURSTEN	0x0
7	Reserved	0x1
6	FACCEN	0x1
5-4	MWID	As needed
3-2	MTYP[0:1]	0x2 (NOR Flash memory)
1	MUXEN	0x0
0	MBKEN	0x1

Table 235. FSMC_BTRx bit fields

Bit number	Bit name	Value to set
31:30	Reserved	0x0
29-28	ACCMOD	0x2
27-24	DATLAT	0x0
23-20	CLKDIV	0x0
19-16	BUSTURN	Time between NEx high to NEx low (BUSTURN HCLK)
15-8	DATAST	Duration of the second access phase (DATAST HCLK cycles) for read accesses.
7-4	ADDHLD	Don’t care
3-0	ADDSET[3:0]	Duration of the first access phase (ADDSET HCLK cycles) for read accesses. Minimum value for ADDSET is 0.

Table 236. FSMC_BWTRx bit fields

Bit number	Bit name	Value to set
31:30	Reserved	0x0
29-28	ACCMOD	0x2
27-24	DATLAT	Don’t care
23-20	CLKDIV	Don’t care
19-16	BUSTURN	Time between NEx high to NEx low (BUSTURN HCLK)
15-8	DATAST	Duration of the second access phase (DATAST+1 HCLK cycles for write accesses,
7-4	ADDHLD	Don’t care
3-0	ADDSET[3:0]	Duration of the first access phase (ADDSET HCLK cycles) for write accesses. Minimum value for ADDSET is 0.

Mode D - asynchronous access with extended address

Figure 445. Mode D read accesses

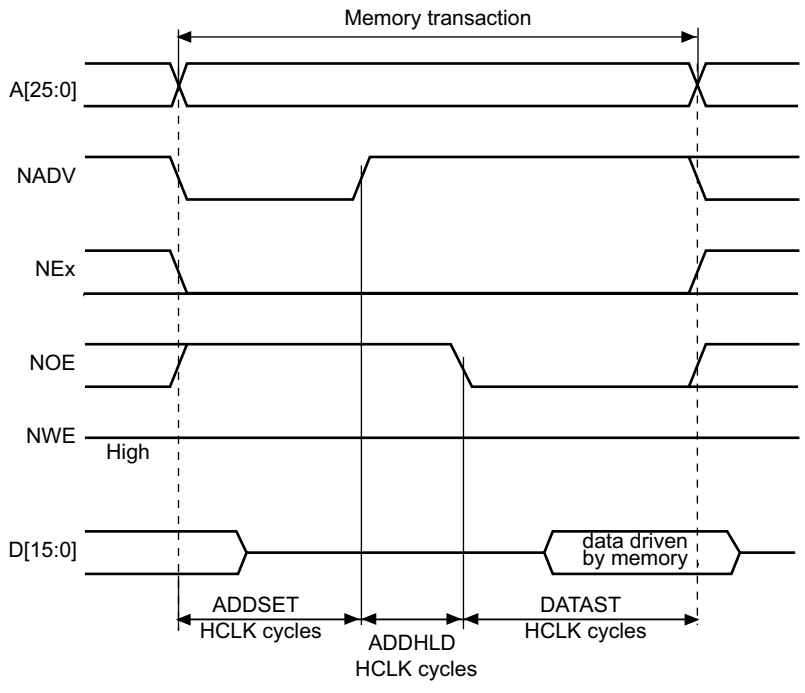

Figure 446. Mode D write accesses

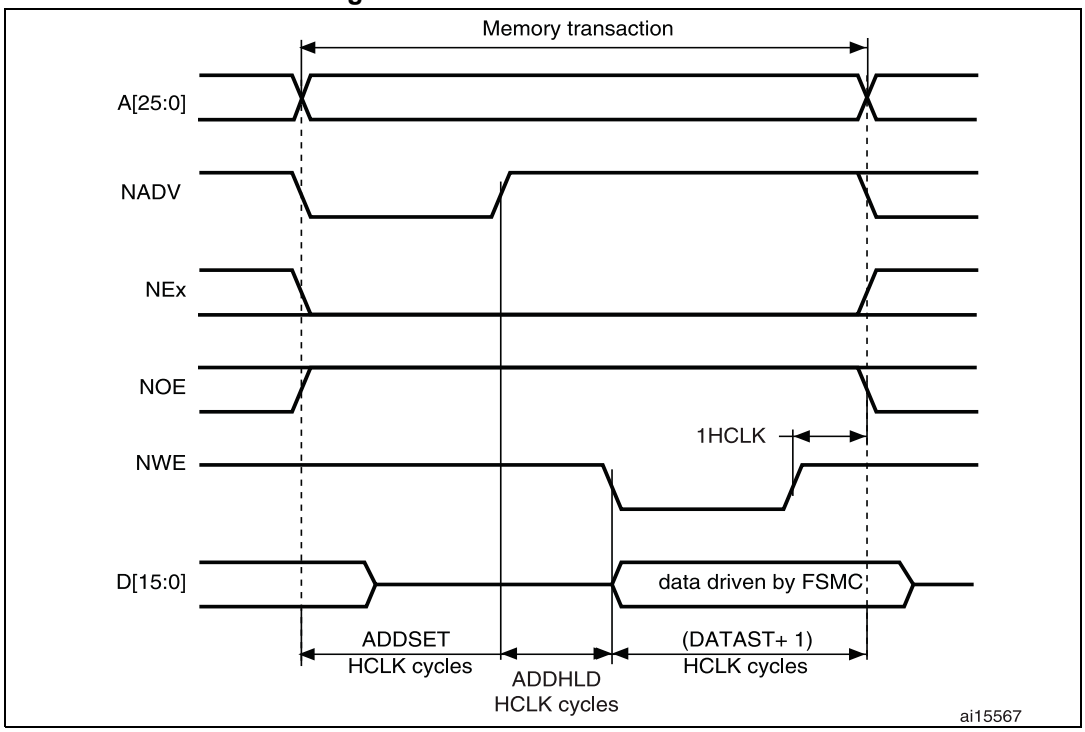

The differences with mode1 are the toggling of NOE that goes on toggling after NADV changes and the independent read and write timings.

Table 237. FSMC_BCRx bit fields

Bit No.	Bit name	Value to set
31-20	Reserved	0x000
19	CBURSTRW	0x0 (no effect on asynchronous mode)
18:16	CPSIZE	0x0 (no effect on asynchronous mode)
15	ASYNCWAIT	Set to 1 if the memory supports this feature. Otherwise keep at 0.
14	EXTMOD	0x1
13	WAITEN	0x0 (no effect on asynchronous mode)
12	WREN	As needed
11	WAITCFG	Don’t care
10	WRAPMOD	0x0
9	WAITPOL	Meaningful only if bit 15 is 1
8	BURSTEN	0x0
7	Reserved	0x1
6	FACCEN	Set according to memory support
5-4	MWID	As needed
3-2	MTYP[0:1]	As needed

Table 237. FSMC_BCRx bit fields (continued)

Bit No.	Bit name	Value to set
1	MUXEN	0x0
0	MBKEN	0x1

Table 238. FSMC_BTRx bit fields

Bit No.	Bit name	Value to set
31:30	Reserved	0x0
29-28	ACCMOD	0x3
27-24	DATLAT	Don't care
23-20	CLKDIV	Don't care
19-16	BUSTURN	Time between NEx high to NEx low (BUSTURN HCLK)
15-8	DATAST	Duration of the second access phase (DATAST HCLK cycles) for read accesses.
7-4	ADDHLD	Duration of the middle phase of the read access (ADDHLD HCLK cycles)
3-0	ADDSET[3:0]	Duration of the first access phase (ADDSET HCLK cycles) for read accesses. Minimum value for ADDSET is 0.

Table 239. FSMC_BWTRx bit fields

Bit No.	Bit name	Value to set
31:30	Reserved	0x0
29-28	ACCMOD	0x3
27-24	DATLAT	0x0
23-20	CLKDIV	0x0
19-16	BUSTURN	Time between NEx high to NEx low (BUSTURN HCLK)
15-8	DATAST	Duration of the second access phase (DATAST+1 HCLK cycles) for write accesses
7-4	ADDHLD	Duration of the middle phase of the write access (ADDHLD HCLK cycles)
3-0	ADDSET[3:0]	Duration of the first access phase (ADDSET+1 HCLK cycles) for write accesses. Minimum value for ADDSET is 0.

Muxed mode - multiplexed asynchronous access to NOR Flash memory

Figure 447. Multiplexed read accesses

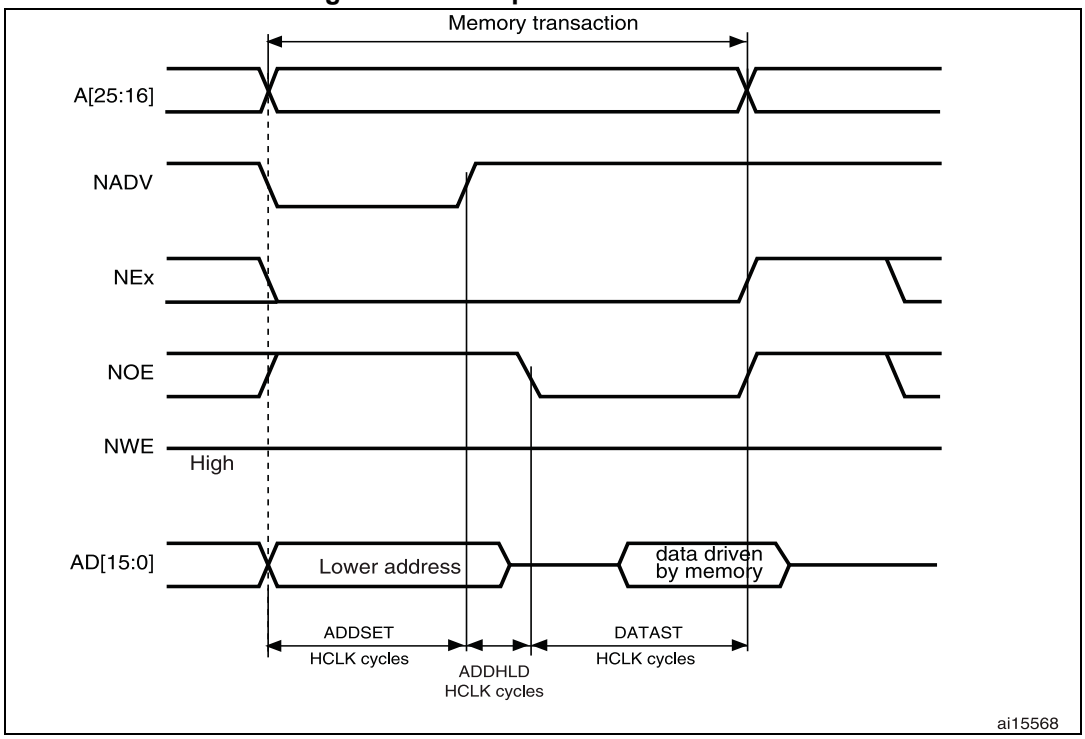

Figure 448. Multiplexed write accesses

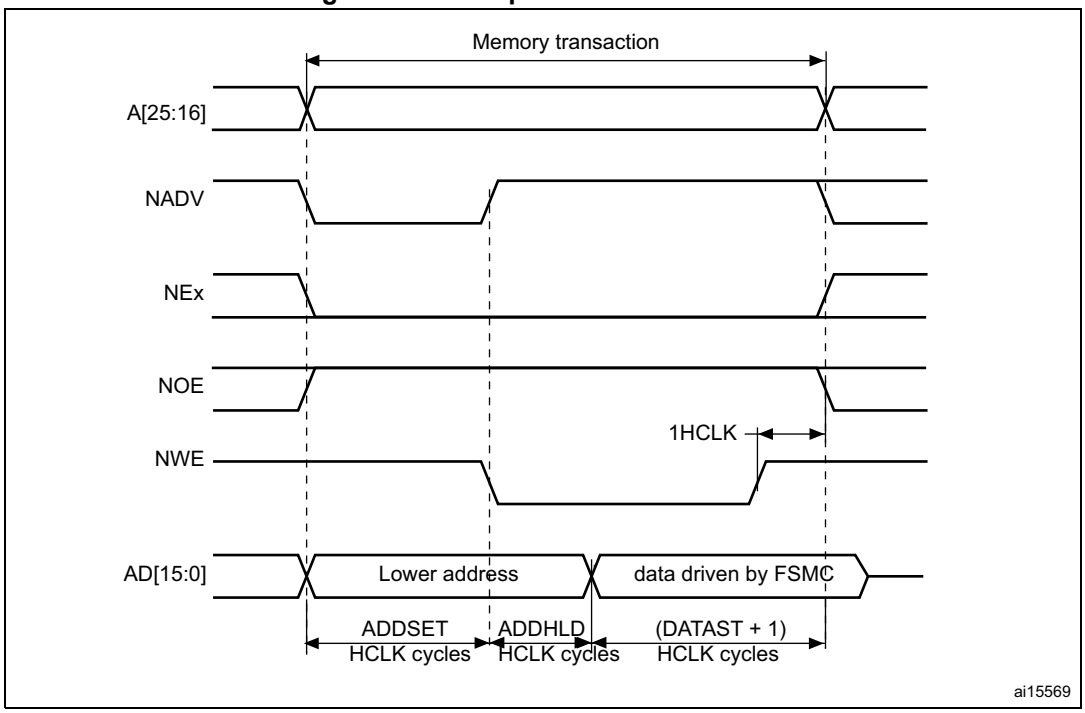

The difference with mode D is the drive of the lower address byte(s) on the databus.

Table 240. FSMC_BCRx bit fields

Bit No.	Bit name	Value to set
31-21	Reserved	0x000
19	CBURSTRW	0x0 (no effect on asynchronous mode)
18:16	CPSIZE	0x0 (no effect on asynchronous mode)
15	ASYNCWAIT	Set to 1 if the memory supports this feature. Otherwise keep at 0.
14	EXTMOD	0x0
13	WAITEN	0x0 (no effect on asynchronous mode)
12	WREN	As needed
11	WAITCFG	Don't care
10	WRAPMOD	0x0
9	WAITPOL	Meaningful only if bit 15 is 1
8	BURSTEN	0x0
7	Reserved	0x1
6	FACCEN	0x1
5-4	MWID	As needed
3-2	MTYP[0:1]	0x2 (NOR Flash memory)
1	MUXEN	0x1
0	MBKEN	0x1

Table 241. FSMC_BTRx bit fields

Bit No.	Bit name	Value to set
31:30	Reserved	0x0
29-28	ACCMOD	0x0
27-24	DATLAT	Don't care
23-20	CLKDIV	Don't care
19-16	BUSTURN	Time between NEx high to NEx low (BUSTURN HCLK)
15-8	DATAST	Duration of the second access phase (DATAST HCLK cycles for read accesses and DATAST+1 HCLK cycles for write accesses).
7-4	ADDHLD	Duration of the middle phase of the access (ADDHLD HCLK cycles).
3-0	ADDSET[3:0]	Duration of the first access phase (ADDSET HCLK cycles). Minimum value for ADDSET is 1.

WAIT management in asynchronous accesses

If the asynchronous memory asserts a WAIT signal to indicate that it is not yet ready to accept or to provide data, the ASYNCWAIT bit has to be set in FSMC_BCRx register.

If the WAIT signal is active (high or low depending on the WAITPOL bit), the second access phase (Data setup phase) programmed by the DATAST bits, is extended until WAIT becomes inactive. Unlike the data setup phase, the first access phases (Address setup and Address hold phases), programmed by the ADDSET[3:0] and ADDHLD bits, are not WAIT sensitive and so they are not prolonged.

The data setup phase (DATAST in the FSMC_BTRx register) must be programmed so that WAIT can be detected 4 HCLK cycles before the end of memory transaction. The following cases must be considered:

1. DATAST in FSMC_BTRx register) Memory asserts the WAIT signal aligned to NOE/NWE which toggles:

$$\text{DATAST} \geq (4 \times \text{HCLK}) + \text{max_wait_assertion_time}$$

2. Memory asserts the WAIT signal aligned to NEx (or NOE/NWE not toggling):

   if

$$\text{max_wait_assertion_time} > \text{address_phase} + \text{hold_phase}$$

   then

$$\text{DATAST} \geq (4 \times \text{HCLK}) + (\text{max_wait_assertion_time} - \text{address_phase} - \text{hold_phase})$$

   otherwise

$$\text{DATAST} \geq 4 \times \text{HCLK}$$

   where max_wait_assertion_time is the maximum time taken by the memory to assert the WAIT signal once NEx/NOE/NWE is low.

Figure 449 and *Figure 450* show the number of HCLK clock cycles that are added to the memory access after WAIT is released by the asynchronous memory (independently of the above cases).

Figure 449. Asynchronous wait during a read access

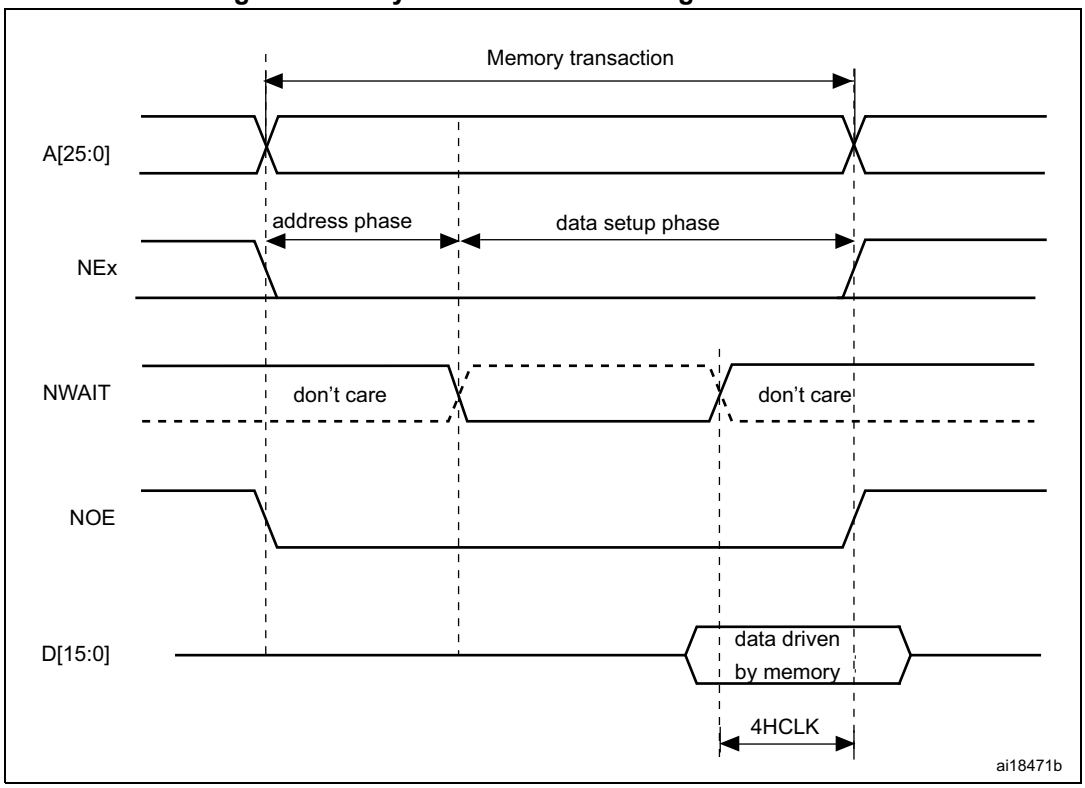

1. NWAIT polarity depends on WAITPOL bit setting in FSMC_BCRx register.

Figure 450. Asynchronous wait during a write access

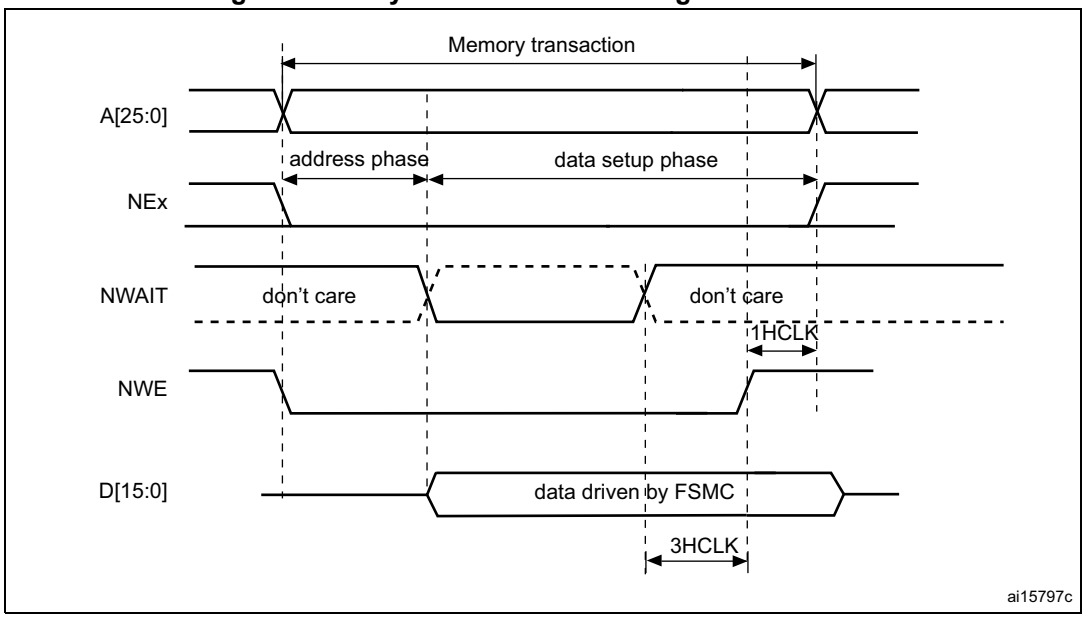

1. NWAIT polarity depends on WAITPOL bit setting in FSMC_BCRx register.

36.5.5 Synchronous transactions

The memory clock, CLK, is a submultiple of HCLK according to the value of parameter CLKDIV.

NOR Flash memories specify a minimum time from NADV assertion to CLK high. To meet this constraint, the FSMC does not issue the clock to the memory during the first internal clock cycle of the synchronous access (before NADV assertion). This guarantees that the rising edge of the memory clock occurs *in the middle* of the NADV low pulse.

Data latency versus NOR Flash latency

The data latency is the number of cycles to wait before sampling the data. The DATLAT value must be consistent with the latency value specified in the NOR Flash configuration register. The FSMC does not include the clock cycle when NADV is low in the data latency count.

Caution: Some NOR Flash memories include the NADV Low cycle in the data latency count, so the exact relation between the NOR Flash latency and the FMSC DATLAT parameter can be either of:

- NOR Flash latency = (DATLAT + 2) CLK clock cycles
- NOR Flash latency = (DATLAT + 3) CLK clock cycles

Some recent memories assert NWAIT during the latency phase. In such cases DATLAT can be set to its minimum value. As a result, the FSMC samples the data and waits long enough to evaluate if the data are valid. Thus the FSMC detects when the memory exits latency and real data are taken.

Other memories do not assert NWAIT during latency. In this case the latency must be set correctly for both the FSMC and the memory, otherwise invalid data are mistaken for good data, or valid data are lost in the initial phase of the memory access.

Single-burst transfer

When the selected bank is configured in burst mode for synchronous accesses, if for example an AHB single-burst transaction is requested on 16-bit memories, the FSMC performs a burst transaction of length 1 (if the AHB transfer is 16-bit), or length 2 (if the AHB transfer is 32-bit) and de-assert the chip select signal when the last data is strobed.

Clearly, such a transfer is not the most efficient in terms of cycles (compared to an asynchronous read). Nevertheless, a random asynchronous access would first require to re-program the memory access mode, which would altogether last longer.

Cross boundary page for Cellular RAM 1.5

Cellular RAM 1.5 does not allow burst access to cross the page boundary. The FSMC controller allows to split automatically the burst access when the memory page size is reached by configuring the CPSIZE bits in the FSMC_BCR1 register following the memory page size.

Wait management

For synchronous NOR Flash memories, NWAIT is evaluated after the programmed latency period, (DATLAT+2) CLK clock cycles.

If NWAIT is sensed active (low level when WAITPOL = 0, high level when WAITPOL = 1), wait states are inserted until NWAIT is sensed inactive (high level when WAITPOL = 0, low level when WAITPOL = 1).

When NWAIT is inactive, the data is considered valid either immediately (bit WAITCFG = 1) or on the next clock edge (bit WAITCFG = 0).

During wait-state insertion via the NWAIT signal, the controller continues to send clock pulses to the memory, keeping the chip select and output enable signals valid, and does not consider the data valid.

There are two timing configurations for the NOR Flash NWAIT signal in burst mode:

- Flash memory asserts the NWAIT signal one data cycle before the wait state (default after reset)
- Flash memory asserts the NWAIT signal during the wait state

These two NOR Flash wait state configurations are supported by the FSMC, individually for each chip select, thanks to the WAITCFG bit in the FSMC_BCRx registers (x = 0..3).

Figure 451. Wait configurations

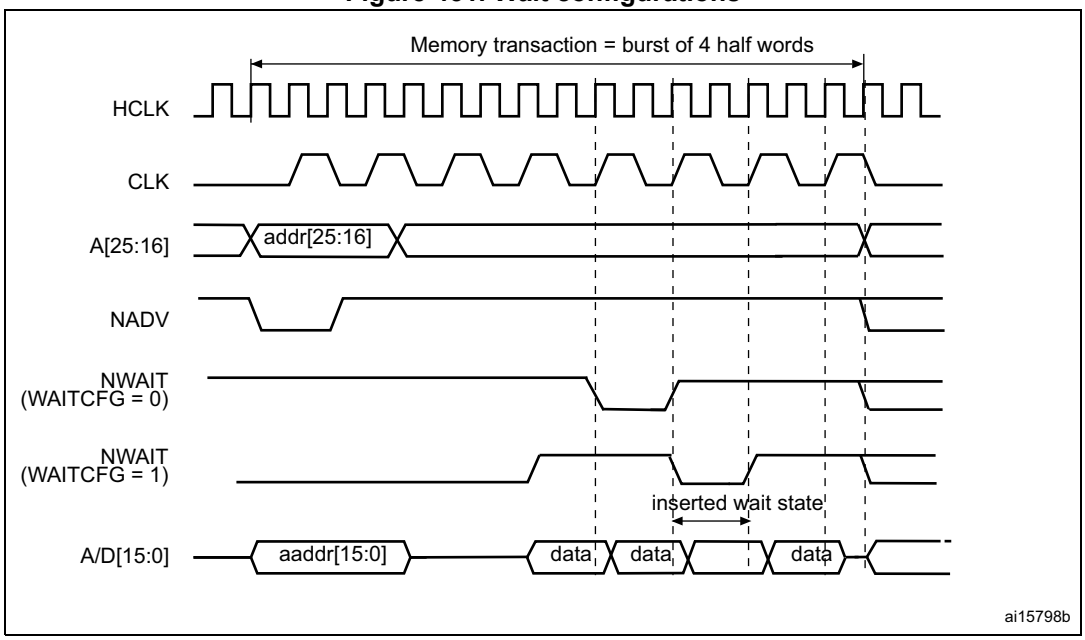

Figure 452. Synchronous multiplexed read mode - NOR, PSRAM (CRAM)

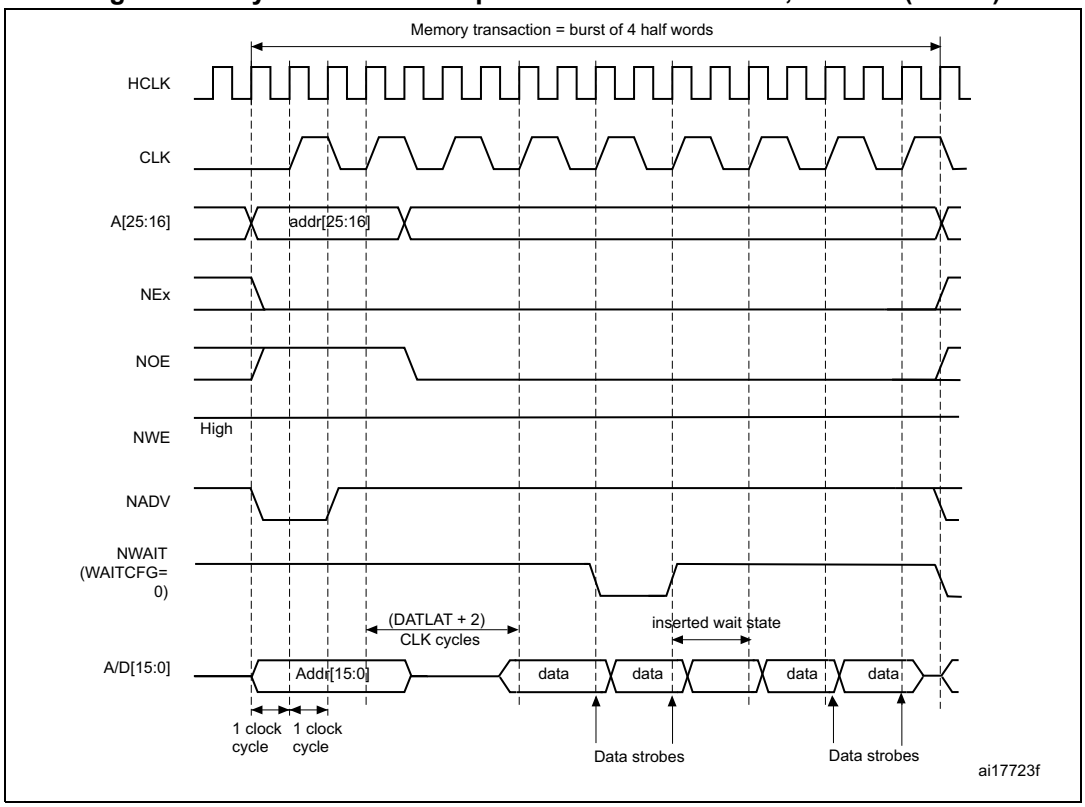

1. Byte lane outputs BL are not shown; for NOR access, they are held high, and, for PSRAM (CRAM) access, they are held low.
2. NWAIT polarity is set to 0.

Table 242. FSMC_BCRx bit fields

Bit No.	Bit name	Value to set
31-20	Reserved	0x000
19	CBURSTRW	No effect on synchronous read
18-16	CPSIZE	As needed (0x1 for CRAM 1.5)
15	ASCYCWAIT	0x0
14	EXTMOD	0x0
13	WAITEN	Set to 1 if the memory supports this feature, otherwise keep at 0.
12	WREN	no effect on synchronous read
11	WAITCFG	to be set according to memory
10	WRAPMOD	0x0
9	WAITPOL	to be set according to memory
8	BURSTEN	0x1
7	Reserved	0x1
6	FACCEN	Set according to memory support (NOR Flash memory)
5-4	MWID	As needed

Table 242. FSMC_BCRx bit fields (continued)

Bit No.	Bit name	Value to set
3-2	MTYP[0:1]	0x1 or 0x2
1	MUXEN	As needed
0	MBKEN	0x1

Table 243. FSMC_BTRx bit fields

Bit No.	Bit name	Value to set
31:30	Reserved	0x0
29:28	ACCMOD	0x0
27-24	DATLAT	Data latency
23-20	CLKDIV	0x0 to get CLK = HCLK (not supported) 0x1 to get CLK = 2 × HCLK ..
19-16	BUSTURN	Time between NEx high to NEx low (BUSTURN HCLK)
15-8	DATAST	Don’t care
7-4	ADDHLD	Don’t care
3-0	ADDSET[3:0]	Don’t care

Figure 453. Synchronous multiplexed write mode - PSRAM (CRAM)

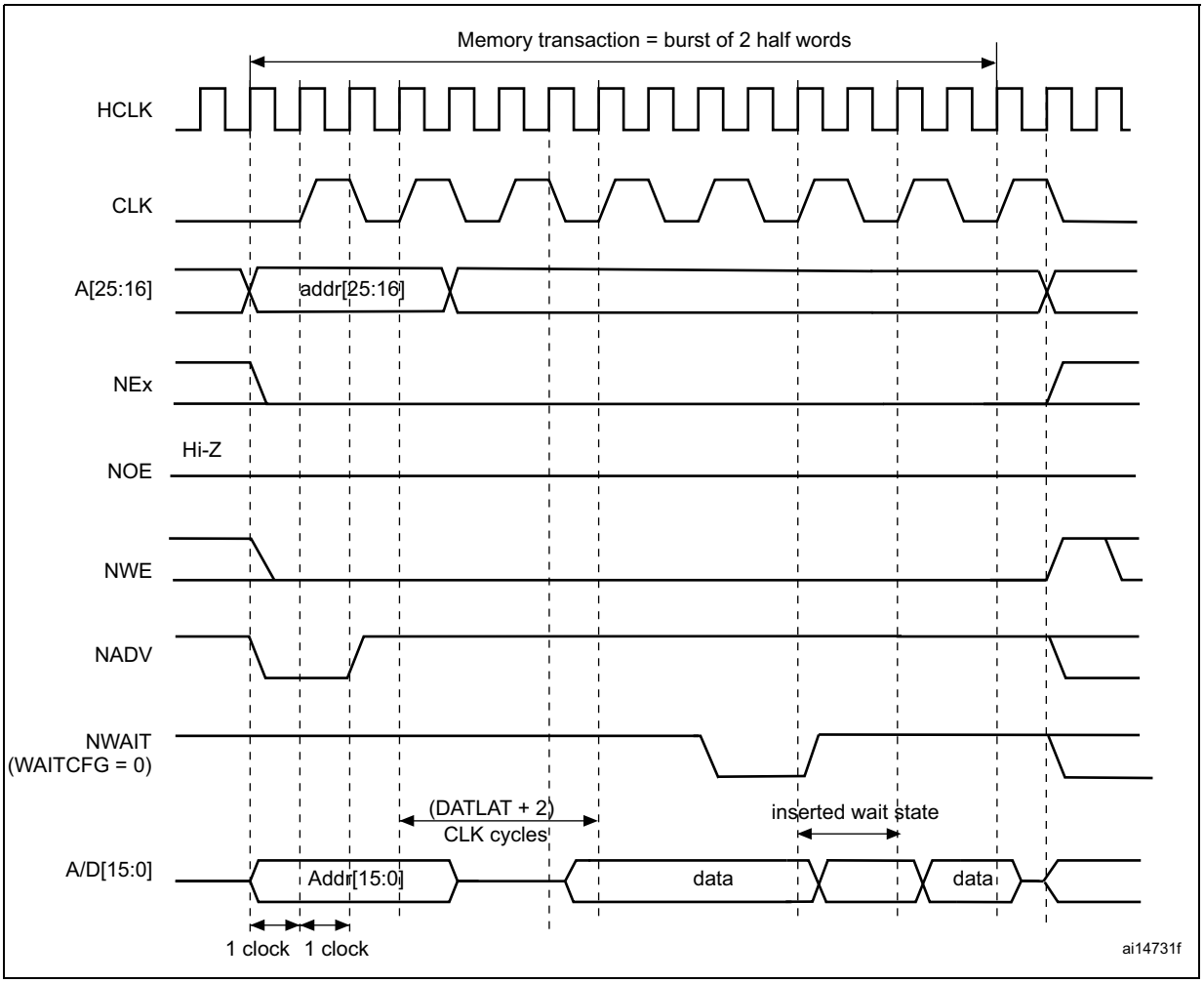

1. Memory must issue NWAIT signal one cycle in advance, accordingly WAITCFG must be programmed to 0.
2. NWAIT polarity is set to 0.
3. Byte Lane (NBL) outputs are not shown, they are held low while NEx is active.

Table 244. FSMC_BCRx bit fields

Bit No.	Bit name	Value to set
31-20	Reserved	0x000
19	CBURSTRW	0x1
18-16	CPSIZE	As needed (0x1 for CRAM 1.5)
15	ASCYCWAIT	0x0
14	EXTMOD	0x0
13	WAITEN	Set to 1 if the memory supports this feature, otherwise keep at 0.
12	WREN	0x1
11	WAITCFG	0x0
10	WRAPMOD	0x0

Table 244. FSMC_BCRx bit fields (continued)

Bit No.	Bit name	Value to set
9	WAITPOL	to be set according to memory
8	BURSTEN	no effect on synchronous write
7	Reserved	0x1
6	FACCEN	Set according to memory support
5-4	MWID	As needed
3-2	MTYP[0:1]	0x1
1	MUXEN	As needed
0	MBKEN	0x1

Table 245. FSMC_BTRx bit fields

Bit No.	Bit name	Value to set
31:30	Reserved	0x0
29:28	ACCMOD	0x0
27-24	DATLAT	Data latency
23-20	CLKDIV	0x0 to get CLK = HCLK (not supported) 0x1 to get CLK = 2 × HCLK
19-16	BUSTURN	Time between NEx high to NEx low (BUSTURN HCLK)
15-8	DATAST	Don’t care
7-4	ADDHLD	Don’t care
3-0	ADDSET[3:0]	Don’t care

36.5.6 NOR/PSRAM control registers

The NOR/PSRAM control registers have to be accessed by words (32 bits).

SRAM/NOR-Flash chip-select control registers 1..4 (FSMC_BCR1..4)

Address offset: 0xA000 0000 + 8 * (x – 1), x = 1...4

Reset value: 0x0000 30DB for Bank1 and 0x0000 30D2 for Bank 2 to 4

This register contains the control information of each memory bank, used for SRAMs, PSRAM and NOR Flash memories.

31	30	29	28	27	26	25	24	23	22	21	20	19	18	17	16	15	14	13	12	11	10	9	8	7	6	5	4	3	2	1	0
Reserved												CBURSTRW	CPSIZE[2:0]			ASCYCWAIT	EXTMOD	WAITEN	WREN	WAITCFG	WRAPMOD	WAITPOL	BURSTEN	Reserved	FACCEN	MWID[1:0]		MTYP[1:0]		MUXEN	MBKEN
												rw				rw	rw	rw	rw	rw	rw	rw	rw		rw	rw	rw	rw	rw	rw	rw

Bits 31: 20 Reserved, must be kept at reset value.

Bit 19 **CBURSTRW:** Write burst enable.

For Cellular RAM (PSRAM) memories, this bit enables the synchronous burst protocol during write operations. The enable bit for synchronous read accesses is the BURSTEN bit in the FSMC_BCRx register.

0: Write operations are always performed in asynchronous mode

1: Write operations are performed in synchronous mode.

Bits 18: 16 **CPSIZE[2:0]:** CRAM page size.

These are used for Cellular RAM 1.5 which does not allow burst access to cross the address boundaries between pages. When these bits are configured, the FSMC controller splits automatically the burst access when the memory page size is reached (refer to memory datasheet for page size).

000: No burst split when crossing page boundary (default after reset)

001: 128 bytes

010: 256 bytes

011: 512 bytes

100: 1024 bytes

Others: reserved.

Bit 15 **ASYNCWAIT**: Wait signal during asynchronous transfers

This bit enables/disables the FSMC to use the wait signal even during an asynchronous protocol.

0: NWAIT signal is not taken into account when running an asynchronous protocol (default after reset)

1: NWAIT signal is taken into account when running an asynchronous protocol

Bit 14 **EXTMOD:** Extended mode enable.

This bit enables the FSMC to program the write timings for non-multiplexed asynchronous accesses inside the FSMC_BWTR register, thus resulting in different timings for read and write operations.

0: values inside FSMC_BWTR register are not taken into account (default after reset)

1: values inside FSMC_BWTR register are taken into account

Note: When the extended mode is disabled, the FSMC can operate in Mode1 or Mode2 as follows:

- *Mode 1 is the default mode when the SRAM/PSRAM memory type is selected (MTYP [0:1]=0x0 or 0x01)*
- *Mode 2 is the default mode when the NOR memory type is selected (MTYP [0:1]= 0x10).*

Bit 13 **WAITEN:** Wait enable bit.

This bit enables/disables wait-state insertion via the NWAIT signal when accessing the Flash memory in synchronous mode.

0: NWAIT signal is disabled (its level not taken into account, no wait state inserted after the programmed Flash latency period)

1: NWAIT signal is enabled (its level is taken into account after the programmed Flash latency period to insert wait states if asserted) (default after reset)

Bit 12 **WREN:** Write enable bit.

This bit indicates whether write operations are enabled/disabled in the bank by the FSMC:

0: Write operations are disabled in the bank by the FSMC, an AHB error is reported,

1: Write operations are enabled for the bank by the FSMC (default after reset).

Bit 11 **WAITCFG:** Wait timing configuration.

The NWAIT signal indicates whether the data from the memory are valid or if a wait state must be inserted when accessing the Flash memory in synchronous mode. This configuration bit determines if NWAIT is asserted by the memory one clock cycle before the wait state or during the wait state:

0: NWAIT signal is active one data cycle before wait state (default after reset),

1: NWAIT signal is active during wait state (not used for PRAM).

Bit 10 **WRAPMOD:** Wrapped burst mode support.

Defines whether the controller will or not split an AHB burst wrap access into two linear accesses. Valid only when accessing memories in burst mode

0: Direct wrapped burst is not enabled (default after reset),

1: Direct wrapped burst is enabled.

Note: This bit has no effect as the CPU and DMA cannot generate wrapping burst transfers.

Bit 9 **WAITPOL:** Wait signal polarity bit.

Defines the polarity of the wait signal from memory. Valid only when accessing the memory in burst mode:

0: NWAIT active low (default after reset),

1: NWAIT active high.

Bit 8 **BURSTEN:** Burst enable bit.

This bit enables/disables synchronous accesses during read operations. It is valid only for synchronous memories operating in burst mode:

0: Burst mode disabled (default after reset). Read accesses are performed in asynchronous mode.

1: Burst mode enable. Read accesses are performed in synchronous mode.

Bit 7 Reserved, must be kept at reset value.

Bit 6 **FACCEN:** Flash access enable

Enables NOR Flash memory access operations.

0: Corresponding NOR Flash memory access is disabled

1: Corresponding NOR Flash memory access is enabled (default after reset)

Bits 5:4 **MWID[1:0]:** Memory databus width.

Defines the external memory device width, valid for all type of memories.

00: 8 bits,

01: 16 bits (default after reset),

10: reserved, do not use,

11: reserved, do not use.

Bits 3:2 **MTYP[1:0]:** Memory type.

Defines the type of external memory attached to the corresponding memory bank:

00: SRAM (default after reset for Bank 2...4)

01: PSRAM (CRAM)

10: NOR Flash/OneNAND Flash (default after reset for Bank 1)

11: reserved

Bit 1 **MUXEN:** Address/data multiplexing enable bit.

When this bit is set, the address and data values are multiplexed on the databus, valid only with NOR and PSRAM memories:

0: Address/Data nonmultiplexed

1: Address/Data multiplexed on databus (default after reset)

Bit 0 **MBKEN:** Memory bank enable bit.

Enables the memory bank. After reset Bank1 is enabled, all others are disabled. Accessing a disabled bank causes an ERROR on AHB bus.

0: Corresponding memory bank is disabled

1: Corresponding memory bank is enabled

SRAM/NOR-Flash chip-select timing registers 1..4 (FSMC_BTR1..4)

Address offset: 0xA000 0000 + 0x04 + 8 * (x – 1), x = 1..4

Reset value: 0x0FFF FFFF

FSMC_BTRx bits are written by software to add a delay at the end of a read /write transaction. This delay allows matching the minimum time between consecutive transactions (t_{EHEL} from NEx high to FSMC_NEx low) and the maximum time required by the memory to free the data bus after a read access (t_{EHQZ}).

This register contains the control information of each memory bank, used for SRAMs, PSRAM and NOR Flash memories.If the EXTMOD bit is set in the FSMC_BCRx register, then this register is partitioned for write and read access, that is, 2 registers are available: one to configure read accesses (this register) and one to configure write accesses (FSMC_BWTRx registers).

31	30	29	28	27	26	25	24	23	22	21	20	19	18	17	16	15	14	13	12	11	10	9	8	7	6	5	4	3	2	1	0
Reserved		ACCMOD[1:0]		DATLAT[3:0]				CLKDIV[3:0]				BUSTURN[3:0]				DATAST[7:0]								ADDHLD[3:0]				ADDSET[3:0]			
		rw	rw	rw	rw	rw	rw	rw	rw	rw	rw	rw	rw	rw	rw	rw	rw	rw	rw	rw	rw	rw	rw	rw	rw	rw	rw	rw	rw	rw	rw

Bits 31:30 Reserved, must be kept at reset value.

Bits 29:28 **ACCMOD[1:0]:** Access mode

Specifies the asynchronous access modes as shown in the timing diagrams. These bits are taken into account only when the EXTMOD bit in the FSMC_BCRx register is 1.

00: access mode A
01: access mode B
10: access mode C
11: access mode D

Bits 27:24 **DATLAT[3:0]:** Data latency for synchronous memory (see note below bit description table)

For synchronous accesses with read/write burst mode enabled (BURSTEN / CBURSTRW bits set), this field defines the number of memory clock cycles (+2) to issue to the memory before reading/writing the first data. This timing parameter is not expressed in HCLK periods, but in FSMC_CLK periods. For asynchronous accesses, this value is don't care.

0000: Data latency of 2 CLK clock cycles for first burst access
1111: Data latency of 17 CLK clock cycles for first burst access (default value after reset)

Bits 23:20 **CLKDIV[3:0]:** Clock divide ratio (for FSMC_CLK signal)

Defines the period of FSMC_CLK clock output signal, expressed in number of HCLK cycles:

0000: Reserved
0001: FSMC_CLK period = 2 × HCLK periods
0010: FSMC_CLK period = 3 × HCLK periods
1111: FSMC_CLK period = 16 × HCLK periods (default value after reset)

In asynchronous NOR Flash, SRAM or PSRAM accesses, this value is don’t care.

Bits 19:16 **BUSTURN[3:0]:** Bus turnaround phase duration

These bits are written by software to add a delay at the end of a write-to-read (and read-to write) transaction. The programmed bus turnaround delay is inserted between an asynchronous read (muxed or D mode) or a write transaction and any other asynchronous/synchronous read or write to/from a static bank (for a read operation, the bank can be the same or a different one; for a write operation, the bank can be different except in r muxed or D mode).

In some cases, the bus turnaround delay is fixed, whatever the programmed BUSTURN values:

- No bus turnaround delay is inserted between two consecutive asynchronous write transfers to the same static memory bank except in muxed and D mode.
- A bus turnaround delay of 1 FSMC clock cycle is inserted between:
  - Two consecutive asynchronous read transfers to the same static memory bank except for muxed and D modes.
  - An asynchronous read to an asynchronous or synchronous write to any static bank or dynamic bank except for muxed and D modes.
  - An asynchronous (modes 1, 2, A, B or C) read and a read operation from another static bank.
- A bus turnaround delay of 2 FSMC clock cycles is inserted between:
  - Two consecutive synchronous write accesses (in burst or single mode) to the same bank
  - A synchronous write (burst or single) access and an asynchronous write or read transfer to or from static memory bank (the bank can be the same or different in case of a read operation).
  - Two consecutive synchronous read accesses (in burst or single mode) followed by a any synchronous/asynchronous read or write from/to another static memory bank.
- A bus turnaround delay of 3 FSMC clock cycles is inserted between:
  - Two consecutive synchronous write operations (in burst or single mode) to different static banks.
  - A synchronous write access (in burst or single mode) and a synchronous read access from the same or to a different bank.

0000: BUSTURN phase duration = 0 HCLK clock cycle added

...

1111: BUSTURN phase duration = 15 × HCLK clock cycles (default value after reset)

Bits 15:8 **DATAST[7:0]:** Data-phase duration

These bits are written by software to define the duration of the data phase (refer to *Figure 436* to *Figure 448*), used in asynchronous accesses:

0000 0000: Reserved
0000 0001: DATAST phase duration = 1 × HCLK clock cycles
0000 0010: DATAST phase duration = 2 × HCLK clock cycles
...
1111 1111: DATAST phase duration = 255 × HCLK clock cycles (default value after reset)

For each memory type and access mode data-phase duration, refer to the respective figure (*Figure 436* to *Figure 448*).

Example: Mode1, write access, DATAST=1: Data-phase duration= DATAST+1 = 2 HCLK clock cycles.

Note: In synchronous accesses, this value is don't care.

Bits 7:4 **ADDHLD[3:0]:** Address-hold phase duration

These bits are written by software to define the duration of the *address hold* phase (refer to *Figure 445* to *Figure 448*), used in mode D and multiplexed accesses:

0000: Reserved
0001: ADDHLD phase duration =1 × HCLK clock cycle
0010: ADDHLD phase duration = 2 × HCLK clock cycle
...
1111: ADDHLD phase duration = 15 × HCLK clock cycles (default value after reset)

For each access mode address-hold phase duration, refer to the respective figure (*Figure 445* to *Figure 448*).

Note: In synchronous accesses, this value is not used, the address hold phase is always 1 memory clock period duration.

Bits 3:0 **ADDSET[3:0]:** Address setup phase duration

These bits are written by software to define the duration of the *address setup* phase (refer to *Figure 436* to *Figure 448*), used in SRAMs, ROMs and asynchronous NOR Flash and PSRAM accesses:

0000: ADDSET phase duration = 0 × HCLK clock cycle
...
1111: ADDSET phase duration = 15 × HCLK clock cycles (default value after reset)

For each access mode address setup phase duration, refer to the respective figure (refer to *Figure 436* to *Figure 448*).

Note: In synchronous NOR Flash and PSRAM accesses, this value is don't care.

Note: PSRAMs (CRAMs) have a variable latency due to internal refresh. Therefore these memories issue the NWAIT signal during the whole latency phase to prolong the latency as needed.
With PSRAMs (CRAMs) the DATLAT field must be set to 0, so that the FSMC exits its latency phase soon and starts sampling NWAIT from memory, then starts to read or write when the memory is ready.
This method can be used also with the latest generation of synchronous Flash memories that issue the NWAIT signal, unlike older Flash memories (check the datasheet of the specific Flash memory being used).

SRAM/NOR-Flash write timing registers 1..4 (FSMC_BWTR1..4)

Address offset: 0xA000 0000 + 0x104 + 8 * (x – 1), x = 1...4

Reset value: 0x0FFF FFFF

This register contains the control information of each memory bank, used for SRAMs, PSRAMs and NOR Flash memories. This register is active for write asynchronous access only when the EXTMOD bit is set in the FSMC_BCRx register.

31	30	29	28	27	26	25	24	23	22	21	20	19	18	17	16	15	14	13	12	11	10	9	8	7	6	5	4	3	2	1	0
Res.		ACCMOD[2:0]		Reserved								BUSTURN[3:0]				DATAST[7:0]								ADDHLD[3:0]				ADDSET[3:0]			
		rw	rw									rw	rw	rw	rw	rw	rw	rw	rw	rw	rw	rw	rw	rw	rw	rw	rw	rw	rw	rw	rw

Bits 31:30 Reserved, must be kept at reset value.

Bits 29:28 **ACCMOD[2:0]:** Access mode.

Specifies the asynchronous access modes as shown in the next timing diagrams.These bits are taken into account only when the EXTMOD bit in the FSMC_BCRx register is 1.

00: access mode A
01: access mode B
10: access mode C
11: access mode D

Bits 27:20 Reserved, must be kept at reset value.

Bits 19:16 **BUSTURN[3:0]**: Bus turnaround phase duration

The programmed bus turnaround delay is inserted between a an asynchronous write transfer and any other asynchronous/synchronous read or write transfer to/from a static bank (for a read operation, the bank can be the same or a different one; for a write operation, the bank can be different except in r muxed or D mode).

In some cases, the bus turnaround delay is fixed, whatever the programmed BUSTURN values:

- No bus turnaround delay is inserted between two consecutive asynchronous write transfers to the same static memory bank except in muxed and D mode.
- A bus turnaround delay of 2 FSMC clock cycles is inserted between:
  - Two consecutive synchronous write accesses (in burst or single mode) to the same bank.
  - A synchronous write transfer (in burst or single mode) and an asynchronous write or read transfer to/from static a memory bank.
- A bus turnaround delay of 3 FSMC clock cycles is inserted between:
  - Two consecutive synchronous write accesses (in burst or single mode) to different static banks.
  - A synchronous write transfer (in burst or single mode) and a synchronous read from the same or from a different bank.

0000: BUSTURN phase duration = 0 HCLK clock cycle added
...
1111: BUSTURN phase duration = 15 HCLK clock cycles added (default value after reset)

Bits 15:8 **DATAST[7:0]:** Data-phase duration.

These bits are written by software to define the duration of the data phase (refer to *Figure 436* to *Figure 448*), used in asynchronous SRAM, PSRAM and NOR Flash memory accesses:

0000 0000: Reserved
0000 0001: DATAST phase duration = 1 × HCLK clock cycles
0000 0010: DATAST phase duration = 2 × HCLK clock cycles
...
1111 1111: DATAST phase duration = 255 × HCLK clock cycles (default value after reset)

Note: In synchronous accesses, this value is don't care.

Bits 7:4 **ADDHLD[3:0]:** Address-hold phase duration.

These bits are written by software to define the duration of the *address hold* phase (refer to *Figure 445* to *Figure 448*), used in asynchronous multiplexed accesses:

0000: Reserved
0001: ADDHLD phase duration = 1 × HCLK clock cycle
0010: ADDHLD phase duration = 2 × HCLK clock cycle
...
1111: ADDHLD phase duration = 15 × HCLK clock cycles (default value after reset)

Note: In synchronous NOR Flash accesses, this value is not used, the address hold phase is always 1 Flash clock period duration.

Bits 3:0 **ADDSET[3:0]:** Address setup phase duration.

These bits are written by software to define the duration of the *address setup* phase in HCLK cycles (refer to *Figure 445* to *Figure 448*), used in asynchronous accessed:

0000: ADDSET phase duration = 0 × HCLK clock cycle
...
1111: ADDSET phase duration = 15 × HCLK clock cycles (default value after reset)

Note: In synchronous NOR Flash and PSRAM accesses, this value is don't care.

36.6 NAND Flash/PC Card controller

The FSMC generates the appropriate signal timings to drive the following types of device:

- NAND Flash
  - 8-bit
  - 16-bit
- 16-bit PC Card compatible devices

The NAND/PC Card controller can control three external banks. Bank 2 and bank 3 support NAND Flash devices. Bank 4 supports PC Card devices.

Each bank is configured by means of dedicated registers (*Section 36.6.8*). The programmable memory parameters include access timings (shown in *Table 246*) and ECC configuration.

Table 246. Programmable NAND/PC Card access parameters

Parameter	Function	Access mode	Unit	Min.	Max.
Memory setup time	Number of clock cycles (HCLK) to set up the address before the command assertion	Read/Write	AHB clock cycle (HCLK)	1	255
Memory wait	Minimum duration (HCLK clock cycles) of the command assertion	Read/Write	AHB clock cycle (HCLK)	2	256
Memory hold	Number of clock cycles (HCLK) to hold the address (and the data in case of a write access) after the command de-assertion	Read/Write	AHB clock cycle (HCLK)	1	254
Memory databus high-Z	Number of clock cycles (HCLK) during which the databus is kept in high-Z state after the start of a write access	Write	AHB clock cycle (HCLK)	0	255

36.6.1 External memory interface signals

The following tables list the signals that are typically used to interface NAND Flash and PC Card.

Note: Prefix “N”. specifies the associated signal as active low.

8-bit NAND Flash

Table 247. 8-bit NAND Flash

FSMC signal name	I/O	Function
A[17]	O	NAND Flash address latch enable (ALE) signal
A[16]	O	NAND Flash command latch enable (CLE) signal
D[7:0]	I/O	8-bit multiplexed, bidirectional address/data bus
NCE[x]	O	Chip select, x = 2, 3
NOE(= NRE)	O	Output enable (memory signal name: read enable, NRE)
NWE	O	Write enable
NWAIT/INT[3:2]	I	NAND Flash ready/busy input signal to the FSMC

There is no theoretical capacity limitation as the FSMC can manage as many address cycles as needed.

16-bit NAND Flash

Table 248. 16-bit NAND Flash

FSMC signal name	I/O	Function
A[17]	O	NAND Flash address latch enable (ALE) signal
A[16]	O	NAND Flash command latch enable (CLE) signal
D[15:0]	I/O	16-bit multiplexed, bidirectional address/data bus
NCE[x]	O	Chip select, x = 2, 3
NOE(= NRE)	O	Output enable (memory signal name: read enable, NRE)
NWE	O	Write enable
NWAIT/INT[3:2]	I	NAND Flash ready/busy input signal to the FSMC

There is no theoretical capacity limitation as the FSMC can manage as many address cycles as needed.

16-bit PC Card

Table 249. 16-bit PC Card

FSMC signal name	I/O	Function
A[10:0]	O	Address bus
NIORD	O	Output enable for I/O space
NIOWR	O	Write enable for I/O space
NREG	O	Register signal indicating if access is in Common or Attribute space
D[15:0]	I/O	Bidirectional databus
NCE4_1	O	Chip select 1
NCE4_2	O	Chip select 2 (indicates if access is 16-bit or 8-bit)
NOE	O	Output enable in Common and in Attribute space
NWE	O	Write enable in Common and in Attribute space
NWAIT	I	PC Card wait input signal to the FSMC (memory signal name IORDY)
INTR	I	PC Card interrupt to the FSMC (only for PC Cards that can generate an interrupt)
CD	I	PC Card presence detection. Active high. If an access is performed to the PC Card banks while CD is low, an AHB error is generated. Refer to *Section 36.3: AHB interface*

36.6.2 NAND Flash / PC Card supported memories and transactions

Table 250 below shows the supported devices, access modes and transactions. Transactions not allowed (or not supported) by the NAND Flash / PC Card controller appear in gray.

Table 250. Supported memories and transactions

Device	Mode	R/W	AHB data size	Memory data size	Allowed/ not allowed	Comments
NAND 8-bit	Asynchronous	R	8	8	Y	
	Asynchronous	W	8	8	Y	
	Asynchronous	R	16	8	Y	Split into 2 FSMC accesses
	Asynchronous	W	16	8	Y	Split into 2 FSMC accesses
	Asynchronous	R	32	8	Y	Split into 4 FSMC accesses
	Asynchronous	W	32	8	Y	Split into 4 FSMC accesses
NAND 16-bit	Asynchronous	R	8	16	Y	
	Asynchronous	W	8	16	N	
	Asynchronous	R	16	16	Y	
	Asynchronous	W	16	16	Y	
	Asynchronous	R	32	16	Y	Split into 2 FSMC accesses
	Asynchronous	W	32	16	Y	Split into 2 FSMC accesses

36.6.3 Timing diagrams for NAND and PC Card

Each PC Card/CompactFlash and NAND Flash memory bank is managed through a set of registers:

- Control register: FSMC_PCRx
- Interrupt status register: FSMC_SRx
- ECC register: FSMC_ECCRx
- Timing register for Common memory space: FSMC_PMEMx
- Timing register for Attribute memory space: FSMC_PATTx
- Timing register for I/O space: FSMC_PIOx

Each timing configuration register contains three parameters used to define number of HCLK cycles for the three phases of any PC Card/CompactFlash or NAND Flash access, plus one parameter that defines the timing for starting driving the databus in the case of a write. *Figure 454* shows the timing parameter definitions for common memory accesses, knowing that Attribute and I/O (only for PC Card) memory space access timings are similar.

Figure 454. NAND/PC Card controller timing for common memory access

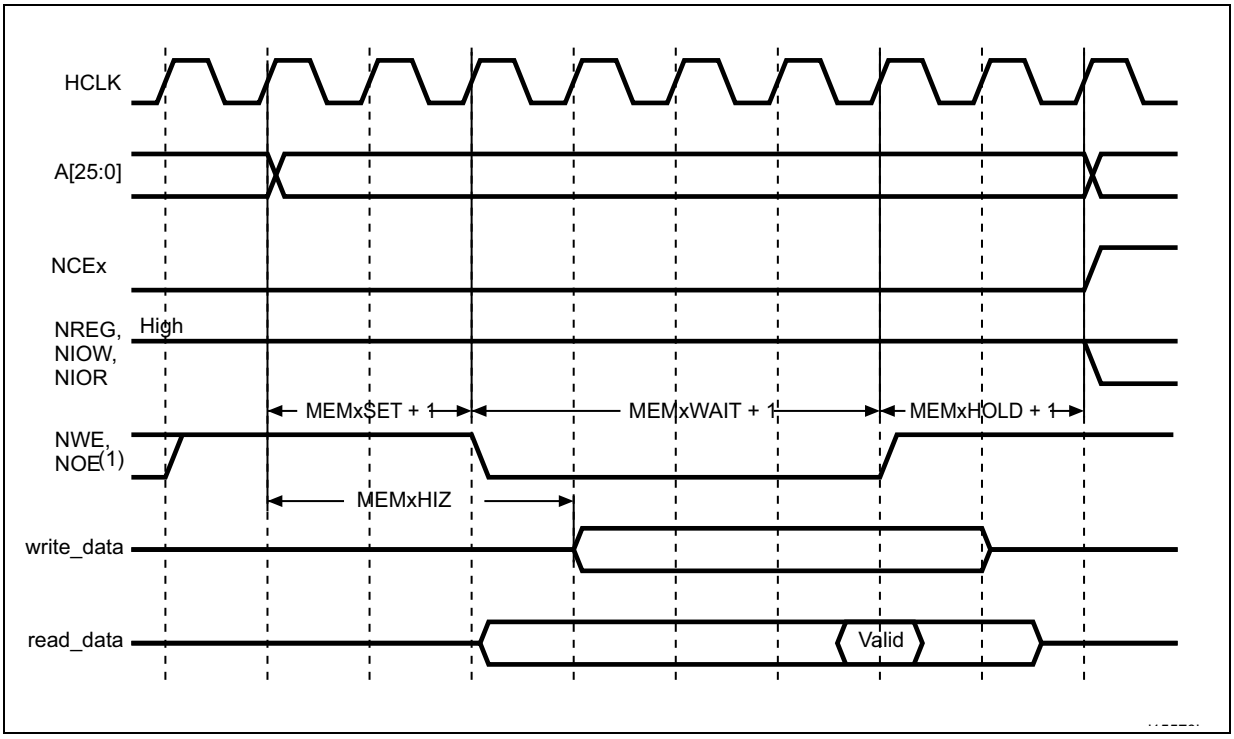

1. NOE remains high (inactive) during write access. NWE remains high (inactive) during read access.
2. For write accesses, the hold phase delay is (MEMHOLD) x HCLK cycles, while it is (MEMHOLD + 2) x HCLK cycles for read accesses.

36.6.4 NAND Flash operations

The command latch enable (CLE) and address latch enable (ALE) signals of the NAND Flash device are driven by some address signals of the FSMC controller. This means that to send a command or an address to the NAND Flash memory, the CPU has to perform a write to a certain address in its memory space.

A typical page read operation from the NAND Flash device is as follows:

1. Program and enable the corresponding memory bank by configuring the FSMC_PCRx and FSMC_PMEMx (and for some devices, FSMC_PATTx, see *Section 36.6.5*) registers according to the characteristics of the NAND Flash (PWID bits for the databus width of the NAND Flash, PTYP = 1, PWAITEN = 0 or 1 as needed, see *Common memory space timing register 2..4 (FSMC_PMEM2..4)* for timing configuration).
2. The CPU performs a byte write in the common memory space, with data byte equal to one Flash command byte (for example 0x00 for Samsung NAND Flash devices). The CLE input of the NAND Flash is active during the write strobe (low pulse on NWE), thus the written byte is interpreted as a command by the NAND Flash. Once the command is latched by the NAND Flash device, it does not need to be written for the following page read operations.
3. The CPU can send the start address (STARTAD) for a read operation by writing the required bytes (for example four bytes or three for smaller capacity devices), STARTAD[7:0], STARTAD[15:8], STARTAD[23:16] and finally STARTAD[25:24] for 64 Mb x 8 bit NAND Flash) in the common memory or attribute space. The ALE input of the NAND Flash device is active during the write strobe (low pulse on NWE), thus the

written bytes are interpreted as the start address for read operations. Using the attribute memory space makes it possible to use a different timing configuration of the FSMC, which can be used to implement the prewait functionality needed by some NAND Flash memories (see details in *Section 36.6.5*).

4. The controller waits for the NAND Flash to be ready (R/NB signal high) to become active, before starting a new access (to same or another memory bank). While waiting, the controller maintains the NCE signal active (low).
5. The CPU can then perform byte read operations in the common memory space to read the NAND Flash page (data field + Spare field) byte by byte.
6. The next NAND Flash page can be read without any CPU command or address write operation, in three different ways:
   - by simply performing the operation described in step 5
   - a new random address can be accessed by restarting the operation at step 3
   - a new command can be sent to the NAND Flash device by restarting at step 2

36.6.5 NAND Flash prewait functionality

Some NAND Flash devices require that, after writing the last part of the address, the controller wait for the R/NB signal to go low as shown in *Figure 455*.

Figure 455. Access to non 'CE don't care' NAND-Flash

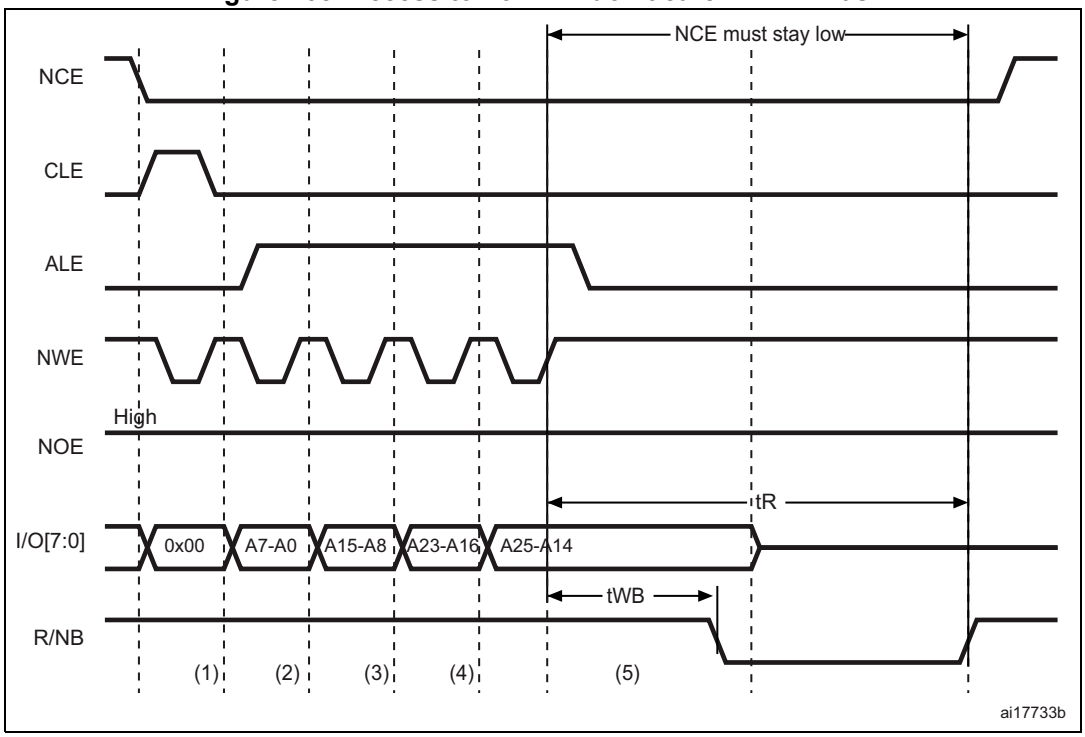

1. CPU wrote byte 0x00 at address 0x7001 0000.
2. CPU wrote byte A7-A0 at address 0x7002 0000.
3. CPU wrote byte A15-A8 at address 0x7002 0000.
4. CPU wrote byte A23-A16 at address 0x7002 0000.
5. CPU wrote byte A25-A24 at address 0x7802 0000: FSMC performs a write access using FSMC_PATT2 timing definition, where ATTHOLD ≥ 7 (providing that (7+1) × HCLK = 112 ns > t_{WB} max). This guarantees that NCE remains low until R/NB goes low and high again (only requested for NAND Flash memories where NCE is not don't care).

When this functionality is needed, it can be guaranteed by programming the MEMHOLD value to meet the t_{WB} timing. However CPU read accesses to the NAND Flash memory has a hold delay of (MEMHOLD + 2) x HCLK cycles, while CPU write accesses have a hold delay of (MEMHOLD) x HCLK cycles.

To overcome this timing constraint, the attribute memory space can be used by programming its timing register with an ATTHOLD value that meets the t_{WB} timing, and leaving the MEMHOLD value at its minimum. Then, the CPU must use the common memory space for all NAND Flash read and write accesses, except when writing the last address byte to the NAND Flash device, where the CPU must write to the attribute memory space.

36.6.6 Computation of the error correction code (ECC) in NAND Flash memory

The FSMC PC-Card controller includes two error correction code computation hardware blocks, one per memory bank. They are used to reduce the host CPU workload when processing the error correction code by software in the system.

These two registers are identical and associated with bank 2 and bank 3, respectively. As a consequence, no hardware ECC computation is available for memories connected to bank 4.

The error correction code (ECC) algorithm implemented in the FSMC can perform 1-bit error correction and 2-bit error detection per 256, 512, 1 024, 2 048, 4 096 or 8 192 bytes read from or written to NAND Flash memory. It is based on the Hamming coding algorithm and consists in calculating the row and column parity.

The ECC modules monitor the NAND Flash databus and read/write signals (NCE and NWE) each time the NAND Flash memory bank is active.

The functional operations are:

- When access to NAND Flash is made to bank 2 or bank 3, the data present on the D[15:0] bus is latched and used for ECC computation.
- When access to NAND Flash occurs at any other address, the ECC logic is idle, and does not perform any operation. Thus, write operations for defining commands or addresses to NAND Flash are not taken into account for ECC computation.

Once the desired number of bytes has been read from/written to the NAND Flash by the host CPU, the FSMC_ECCR2/3 registers must be read in order to retrieve the computed value. Once read, they should be cleared by resetting the ECCEN bit to zero. To compute a new data block, the ECCEN bit must be set to one in the FSMC_PCR2/3 registers.

To perform an ECC computation:

1. Enable the ECCEN bit in the FSMC_PCR2/3 register.
2. Write data to the NAND Flash memory page. While the NAND page is written, the ECC block computes the ECC value.
3. Read the ECC value available in the FSMC_ECCR2/3 register and store it in a variable.
4. Clear the ECCEN bit and then enable it in the FSMC_PCR2/3 register before reading back the written data from the NAND page. While the NAND page is read, the ECC block computes the ECC value.
5. Read the new ECC value available in the FSMC_ECCR2/3 register.
6. If the two ECC values are the same, no correction is required, otherwise there is an ECC error and the software correction routine returns information on whether the error can be corrected or not.

36.6.7 PC Card/CompactFlash operations

Address spaces and memory accesses

The FSMC supports Compact Flash storage or PC Cards in Memory Mode and I/O Mode (True IDE mode is not supported).

The Compact Flash storage and PC Cards are made of 3 memory spaces:

- Common Memory Space
- Attribute Space
- I/O Memory Space

The nCE2 and nCE1 pins (FSMC_NCE4_2 and FSMC_NCE4_1 respectively) select the card and indicate whether a byte or a word operation is being performed: nCE2 accesses the odd byte on D15-8 and nCE1 accesses the even byte on D7-0 if A0=0 or the odd byte on D7-0 if A0=1. The full word is accessed on D15-0 if both nCE2 and nCE1 are low.

The memory space is selected by asserting low nOE for read accesses or nWE for write accesses, combined with the low assertion of nCE2/nCE1 and nREG.

- If pin nREG=1 during the memory access, the common memory space is selected
- If pin nREG=0 during the memory access, the attribute memory space is selected

The I/O Space is selected by asserting low nIORD for read accesses or nIOWR for write accesses [instead of nOE/nWE for memory Space], combined with nCE2/nCE1. Note that nREG must also be asserted low during accesses to I/O Space.

Three type of accesses are allowed for a 16-bit PC Card:

- Accesses to Common Memory Space for data storage can be either 8-bit accesses at even addresses or 16 bit AHB accesses.

  Note that 8-bit accesses at odd addresses are not supported and will not lead to the low assertion of nCE2. A 32-bit AHB request is translated into two 16-bit memory accesses.
- Accesses to Attribute Memory Space where the PC Card stores configuration information are limited to 8-bit AHB accesses at even addresses.

  Note that a 16-bit AHB access will be converted into a single 8-bit memory transfer: nCE1 will be asserted low, nCE2 will be asserted high and only the even Byte on D7-D0 will be valid. Instead a 32-bit AHB access will be converted into two 8-bit memory

transfers at even addresses: nCE1 will be asserted low, NCE2 will be asserted high and only the even bytes will be valid.

- Accesses to I/O Space can be performed either through AHB 8-bit or 16-bit accesses.

Table 251. 16-bit PC-Card signals and access type

nCE2	nCE1	nREG	nOE/nWE	nIORD /nIOWR	A10	A9	A7-1	A0	Space	Access Type	Allowed/not Allowed
1	0	1	0	1	X	X	X-X	X	Common Memory Space	Read/Write byte on D7-D0	YES
0	1	1	0	1	X	X	X-X	X		Read/Write byte on D15-D8	Not supported
0	0	1	0	1	X	X	X-X	0		Read/Write word on D15-D0	YES
X	0	0	0	1	0	1	X-X	0	Attribute Space	Read or Write Configuration Registers	YES
X	0	0	0	1	0	0	X-X	0		Read or Write CIS (Card Information Structure)	YES
1	0	0	0	1	X	X	X-X	1	Attribute Space	Invalid Read or Write (odd address)	YES
0	1	0	0	1	X	X	X-X	x		Invalid Read or Write (odd address)	YES
1	0	0	1	0	X	X	X-X	0	I/O space	Read Even Byte on D7-0	YES
1	0	0	1	0	X	X	X-X	1		Read Odd Byte on D7-0	YES
1	0	0	1	0	X	X	X-X	0		Write Even Byte on D7-0	YES
1	0	0	1	0	X	X	X-X	1		Write Odd Byte on D7-0	YES
0	0	0	1	0	X	X	X-X	0		Read Word on D15-0	YES
0	0	0	1	0	X	X	X-X	0		Write word on D15-0	YES
0	1	0	1	0	X	X	X-X	X		Read Odd Byte on D15-8	Not supported
0	1	0	1	0	X	X	X-X	X		Write Odd Byte on D15-8	Not supported

The FSMC Bank 4 gives access to those 3 memory spaces as described in *Section 36.4.2: NAND/PC Card address mapping* and *Table 218: Memory mapping and timing registers*.

Wait Feature

The CompactFlash Storage or PC Card may request the FSMC to extend the length of the access phase programmed by MEMWAITx/ATTWAITx/IOWAITx bits, asserting the nWAIT signal after nOE/nWE or nIORD/nIOWR activation if the wait feature is enabled through the PWAITEN bit in the FSMC_PCRx register. In order to detect the nWAIT assertion correctly, the MEMWAITx/ATTWAITx/IOWAITx bits must be programmed as follows:

xxWAITx >= 4 + max_wait_assertion_time/HCLK

Where max_wait_assertion_time is the maximum time taken by NWAIT to go low once nOE/nWE or nIORD/nIOWR is low.

After the de-assertion of nWAIT, the FSMC extends the WAIT phase for 4 HCLK clock cycles.

36.6.8 NAND Flash/PC Card control registers

The NAND Flash/PC Card control registers have to be accessed by words (32 bits).

PC Card/NAND Flash control registers 2..4 (FSMC_PCR2..4)

Address offset: 0xA0000000 + 0x40 + 0x20 * (x – 1), x = 2..4

Reset value: 0x0000 0018

31	30	29	28	27	26	25	24	23	22	21	20	19	18	17	16	15	14	13	12	11	10	9	8	7	6	5	4	3	2	1	0
Reserved												ECCPS[2:0]			TAR[2:0]				TCLR[2:0]				Res.		ECCEN	PWID[1:0]		PTYP	PBKEN	PWAITEN	Reserved
												rw	rw	rw	rw	rw	rw	rw	rw	rw	rw	rw			rw	rw	rw	rw	rw	rw	

Bits 31:20 Reserved, must be kept at reset value.

Bits 19:17 **ECCPS[2:0]:** ECC page size.
Defines the page size for the extended ECC:
000: 256 bytes
001: 512 bytes
010: 1024 bytes
011: 2048 bytes
100: 4096 bytes
101: 8192 bytes

Bits 16:13 **TAR[2:0]:** ALE to RE delay.
Sets time from ALE low to RE low in number of AHB clock cycles (HCLK).
Time is: t_ar = (TAR + SET + 2) × THCLK where THCLK is the HCLK clock period
0000: 1 HCLK cycle (default)
1111: 16 HCLK cycles
Note: SET is MEMSET or ATTSET according to the addressed space.

Bits 12:9 **TCLR[2:0]:** CLE to RE delay.
Sets time from CLE low to RE low in number of AHB clock cycles (HCLK).
Time is t_clr = (TCLR + SET + 2) × THCLK where THCLK is the HCLK clock period
0000: 1 HCLK cycle (default)
1111: 16 HCLK cycles
Note: SET is MEMSET or ATTSET according to the addressed space.

Bits 8:7 Reserved, must be kept at reset value.

Bit 6 **ECCEN:** ECC computation logic enable bit
0: ECC logic is disabled and reset (default after reset),
1: ECC logic is enabled.

Bits 5:4 **PWID[1:0]:** Databus width.

Defines the external memory device width.

00: 8 bits
01: 16 bits (default after reset). This value is mandatory for PC Cards.
10: reserved, do not use
11: reserved, do not use

Bit 3 **PTYP:** Memory type.

Defines the type of device attached to the corresponding memory bank:

0: PC Card, CompactFlash, CF+ or PCMCIA
1: NAND Flash (default after reset)

Bit 2 **PBKEN:** PC Card/NAND Flash memory bank enable bit.

Enables the memory bank. Accessing a disabled memory bank causes an ERROR on AHB bus

0: Corresponding memory bank is disabled (default after reset)
1: Corresponding memory bank is enabled

Bit 1 **PWAITEN:** Wait feature enable bit.

Enables the Wait feature for the PC Card/NAND Flash memory bank:

0: disabled
1: enabled

Note: For a PC Card, when the wait feature is enabled, the MEMWAITx/ATTWAITx/IOWAITx bits must be programmed to a value as follows:
xxWAITx ≥ 4 + max_wait_assertion_time/HCLK
Where max_wait_assertion_time is the maximum time taken by NWAIT to go low once nOE/nWE or nIORD/nIOWR is low.

Bit 0 Reserved, must be kept at reset value.

FIFO status and interrupt register 2..4 (FSMC_SR2..4)

Address offset: 0xA000 0000 + 0x44 + 0x20 * (x-1), x = 2..4

Reset value: 0x0000 0040

This register contains information about FIFO status and interrupt. The FSMC has a FIFO that is used when writing to memories to store up to16 words of data from the AHB.
This is used to quickly write to the AHB and free it for transactions to peripherals other than the FSMC, while the FSMC is draining its FIFO into the memory. This register has one of its bits that indicates the status of the FIFO, for ECC purposes.
The ECC is calculated while the data are written to the memory, so in order to read the correct ECC the software must wait until the FIFO is empty.

31	30	29	28	27	26	25	24	23	22	21	20	19	18	17	16	15	14	13	12	11	10	9	8	7	6	5	4	3	2	1	0
Reserved																									FEMPT	IFEN	ILEN	IREN	IFS	ILS	IRS
																									r	rw	rw	rw	rw	rw	rw

Bits 31:7 Reserved, must be kept at reset value.

Bit 6 **FEMPT:** FIFO empty.
Read-only bit that provides the status of the FIFO
0: FIFO not empty
1: FIFO empty

Bit 5 **IFEN:** Interrupt falling edge detection enable bit
0: Interrupt falling edge detection request disabled
1: Interrupt falling edge detection request enabled

Bit 4 **ILEN:** Interrupt high-level detection enable bit
0: Interrupt high-level detection request disabled
1: Interrupt high-level detection request enabled

Bit 3 **IREN:** Interrupt rising edge detection enable bit
0: Interrupt rising edge detection request disabled
1: Interrupt rising edge detection request enabled

Bit 2 **IFS:** Interrupt falling edge status
The flag is set by hardware and reset by software.
0: No interrupt falling edge occurred
1: Interrupt falling edge occurred

Note: This bit is set by programming it to 1 by software.

Bit 1 **ILS:** Interrupt high-level status
The flag is set by hardware and reset by software.
0: No Interrupt high-level occurred
1: Interrupt high-level occurred

Bit 0 **IRS:** Interrupt rising edge status
The flag is set by hardware and reset by software.
0: No interrupt rising edge occurred
1: Interrupt rising edge occurred

Note: This bit is set by programming it to 1 by software.

Common memory space timing register 2..4 (FSMC_PMEM2..4)

Address offset: Address: 0xA000 0000 + 0x48 + 0x20 * (x – 1), x = 2..4

Reset value: 0xFCFC FCFC

Each FSMC_PMEMx (x = 2..4) read/write register contains the timing information for PC Card or NAND Flash memory bank x, used for access to the common memory space of the 16-bit PC Card/CompactFlash, or to access the NAND Flash for command, address write access and data read/write access.

31	30	29	28	27	26	25	24	23	22	21	20	19	18	17	16	15	14	13	12	11	10	9	8	7	6	5	4	3	2	1	0
MEMHIZ[7:0]								MEMHOLD[7:0]								MEMWAIT[7:0]								MEMSET[7:0]							
rw	rw	rw	rw	rw	rw	rw	rw	rw	rw	rw	rw	rw	rw	rw	rw	rw	rw	rw	rw	rw	rw	rw	rw	rw	rw	rw	rw	rw	rw	rw	rw

Bits 31:24 **MEMHIZx[7:0]:** Common memory x databus HiZ time

Defines the number of HCLK clock cycles during which the databus is kept in HiZ after the start of a PC Card/NAND Flash write access to common memory space on socket x. Only valid for write transaction:

0000 0000: 1 HCLK cycle
1111 1110: 255 HCLK cycles
1111 1111: Reserved

Bits 23:16 **MEMHOLDx[7:0]:** Common memory x hold time

For NAND Flash read accesses to the common memory space, these bits define the number of (HCLK+2) clock cycles during which the address is held after the command is deasserted (NWE, NOE).
For NAND Flash write accesses to the common memory space, these bits define the number of HCLK clock cycles during which the data are held after the command is deasserted (NWE, NOE).
0000 0000: Reserved
0000 0001: 1 HCLK cycle for write accesses, 3 HCLK cycles for read accesses
1111 1110: 254 HCLK cycle for write accesses, 256 HCLK cycles for read accesses
1111 1111: Reserved

Bits 15:8 **MEMWAITx[7:0]:** Common memory x wait time

Defines the minimum number of HCLK (+1) clock cycles to assert the command (NWE, NOE), for PC Card/NAND Flash read or write access to common memory space on socket x. The duration for command assertion is extended if the wait signal (NWAIT) is active (low) at the end of the programmed value of HCLK:
0000 0000: Reserved
0000 0001: 2 HCLK cycles (+ wait cycle introduced by deasserting NWAIT)
1111 1110: 255 HCLK cycles (+ wait cycle introduced by deasserting NWAIT)
1111 1111: Reserved.

Bits 7:0 **MEMSETx[7:0]:** Common memory x setup time

Defines the number of HCLK () clock cycles to set up the address before the command assertion (NWE, NOE), for PC Card/NAND Flash read or write access to common memory space on socket x:
0000 0000: 1 HCLK cycle
1111 1110: 255 HCLK cycles
1111 1111: Reserved

Attribute memory space timing registers 2..4 (FSMC_PATT2..4)

Address offset: 0xA000 0000 + 0x4C + 0x20 * (x – 1), x = 2..4

Reset value: 0xFCFC FCFC

Each FSMC_PATTx (x = 2..4) read/write register contains the timing information for PC Card/CompactFlash or NAND Flash memory bank x. It is used for 8-bit accesses to the attribute memory space of the PC Card/CompactFlash or to access the NAND Flash for the last address write access if the timing must differ from that of previous accesses (for Ready/Busy management, refer to *Section 36.6.5: NAND Flash prewait functionality*).

31	30	29	28	27	26	25	24	23	22	21	20	19	18	17	16	15	14	13	12	11	10	9	8	7	6	5	4	3	2	1	0
ATTHIZ[7:0]								ATTHOLD[7:0]								ATTWAIT[7:0]								ATTSET[7:0]							
rw	rw	rw	rw	rw	rw	rw	rw	rw	rw	rw	rw	rw	rw	rw	rw	rw	rw	rw	rw	rw	rw	rw	rw	rw	rw	rw	rw	rw	rw	rw	rw

Bits 31:24 **ATTHIZ[7:0]:** Attribute memory x databus HiZ time

Defines the number of HCLK clock cycles during which the databus is kept in HiZ after the start of a PC CARD/NAND Flash write access to attribute memory space on socket x. Only valid for write transaction:

0000 0000: 0 HCLK cycle

1111 1110: 255 HCLK cycles

1111 1111: Reserved.

Bits 23:16 **ATTHOLD[7:0]:** Attribute memory x hold time

For PC Card/NAND Flash read accesses to attribute memory space on socket x, these bits define the number of HCLK clock cycles (HCLK +2) clock cycles during which the address is held after the command is deasserted (NWE, NOE).

For PC Card/NAND Flash write accesses to attribute memory space on socket x, these bits define the number of HCLK clock cycles during which the data are held after the command is deasserted (NWE, NOE).

0000 0000: reserved

0000 0001: 1 HCLK cycle for write access, 3 HCLK cycles for read accesses

1111 1110: 254 HCLK cycle for write access, 256 HCLK cycles for read accesses

1111 1111: Reserved

Bits 15:8 **ATTWAIT[7:0]:** Attribute memory x wait time

Defines the minimum number of HCLK (+1) clock cycles to assert the command (NWE, NOE), for PC Card/NAND Flash read or write access to attribute memory space on socket x. The duration for command assertion is extended if the wait signal (NWAIT) is active (low) at the end of the programmed value of HCLK:

0000 0000: Reserved

0000 0001: 2 HCLK cycles (+ wait cycle introduced by deassertion of NWAIT)

1111 1111: 255 HCLK cycles (+ wait cycle introduced by deasserting NWAIT)

1111 1111: Reserved.

Bits 7:0 **ATTSET[7:0]:** Attribute memory x setup time

Defines the number of HCLK (+1) clock cycles to set up address before the command assertion (NWE, NOE), for PC CARD/NAND Flash read or write access to attribute memory space on socket x:

0000 0000: 1 HCLK cycle

1111 1110: 255 HCLK cycles

1111 1111: Reserved.

I/O space timing register 4 (FSMC_PIO4)

Address offset: 0xA000 0000 + 0xB0
Reset value: 0xFCFCFCFC

The FSMC_PIO4 read/write registers contain the timing information used to gain access to the I/O space of the 16-bit PC Card/CompactFlash.

31	30	29	28	27	26	25	24	23	22	21	20	19	18	17	16	15	14	13	12	11	10	9	8	7	6	5	4	3	2	1	0
IOHIZ[7:0]								IOHOLD[7:0]								IOWAIT[7:0]								IOSET[7:0]							
rw	rw	rw	rw	rw	rw	rw	rw	rw	rw	rw	rw	rw	rw	rw	rw	rw	rw	rw	rw	rw	rw	rw	rw	rw	rw	rw	rw	rw	rw	rw	rw

Bits 31:24 **IOHIZ[7:0]:** I/O x databus HiZ time

Defines the number of HCLK clock cycles during which the databus is kept in HiZ after the start of a PC Card write access to I/O space on socket x. Only valid for write transaction:

0000 0000: 0 HCLK cycle

1111 1111: 255 HCLK cycles (default value after reset)

Bits 23:16 **IOHOLD[7:0]:** I/O x hold time

Defines the number of HCLK clock cycles to hold address (and data for write access) after the command deassertion (NWE, NOE), for PC Card read or write access to I/O space on socket x:

0000 0000: reserved

0000 0001: 1 HCLK cycle

1111 1111: 255 HCLK cycles (default value after reset)

Bits 15:8 **IOWAIT[7:0]:** I/O x wait time

Defines the minimum number of HCLK (+1) clock cycles to assert the command (SMNWE, SMNOE), for PC Card read or write access to I/O space on socket x. The duration for command assertion is extended if the wait signal (NWAIT) is active (low) at the end of the programmed value of HCLK:

0000 0000: reserved, do not use this value

0000 0001: 2 HCLK cycles (+ wait cycle introduced by deassertion of NWAIT)

1111 1111: 256 HCLK cycles (+ wait cycle introduced by the Card deasserting NWAIT) (default value after reset)

Bits 7:0 **IOSET[7:0]:** I/O x setup time

Defines the number of HCLK (+1) clock cycles to set up the address before the command assertion (NWE, NOE), for PC Card read or write access to I/O space on socket x:

0000 0000: 1 HCLK cycle

1111 1111: 256 HCLK cycles (default value after reset)

ECC result registers 2/3 (FSMC_ECCR2/3)

Address offset: 0xA000 0000 + 0x54 + 0x20 * (x – 1), x = 2 or 3

Reset value: 0x0000 0000

These registers contain the current error correction code value computed by the ECC computation modules of the FSMC controller (one module per NAND Flash memory bank). When the CPU reads the data from a NAND Flash memory page at the correct address (refer to *Section 36.6.6: Computation of the error correction code (ECC) in NAND Flash memory*), the data read from or written to the NAND Flash are processed automatically by ECC computation module. At the end of X bytes read (according to the ECCPS field in the FSMC_PCRx registers), the CPU must read the computed ECC value from the FSMC_ECCx registers, and then verify whether these computed parity data are the same as the parity value recorded in the spare area, to determine whether a page is valid, and, to correct it if applicable. The FSMC_ECCRx registers should be cleared after being read by setting the ECCEN bit to zero. For computing a new data block, the ECCEN bit must be set to one.

31	30	29	28	27	26	25	24	23	22	21	20	19	18	17	16	15	14	13	12	11	10	9	8	7	6	5	4	3	2	1	0
ECCx[31:0]																															
r																															

Bits 31:0 **ECCx[31:0]:** ECC result

This field provides the value computed by the ECC computation logic. *Table 252* hereafter describes the contents of these bit fields.

Table 252. ECC result relevant bits

ECCPS[2:0]	Page size in bytes	ECC bits
000	256	ECC[21:0]
001	512	ECC[23:0]
010	1024	ECC[25:0]
011	2048	ECC[27:0]
100	4096	ECC[29:0]
101	8192	ECC[31:0]

36.6.9 FSMC register map

The following table summarizes the FSMC registers.

Table 253. FSMC register map

Offset	Register	31	30	29	28	27	26	25	24	23	22	21	20	19	18	17	16	15	14	13	12	11	10	9	8	7	6	5	4	3	2	1	0
0000	FSMC_BCR1	Reserved												CBURSTRW	CPSIZE[2:0]			ASYNCWAIT	EXTMOD	WAITEN	WREN	WAITCFG	WRAPMOD	WAITPOL	BURSTEN	Reserved	FACCEN	MWID[1:0]		MTYP[0:1]		MUXEN	MBKEN
0008	FSMC_BCR2	Reserved												CBURSTRW	CPSIZE[2:0]			ASYNCWAIT	EXTMOD	WAITEN	WREN	WAITCFG	WRAPMOD	WAITPOL	BURSTEN	Reserved	FACCEN	MWID[1:0]		MTYP[0:1]		MUXEN	MBKEN
0010	FSMC_BCR3	Reserved												CBURSTRW	CPSIZE[2:0]			ASYNCWAIT	EXTMOD	WAITEN	WREN	WAITCFG	WRAPMOD	WAITPOL	BURSTEN	Reserved	FACCEN	MWID[1:0]		MTYP[0:1]		MUXEN	MBKEN
0018	FSMC_BCR4	Reserved												CBURSTRW	CPSIZE[2:0]			ASYNCWAIT	EXTMOD	WAITEN	WREN	WAITCFG	WRAPMOD	WAITPOL	BURSTEN	Reserved	FACCEN	MWID[1:0]		MTYP[0:1]		MUXEN	MBKEN
0004	FSMC_BTR1	Res.		ACCMOD[1:0]		DATLAT[3:0]				CLKDIV[3:0]				BUSTURN[3:0]				DATAST[7:0]								ADDHLD[3:0]				ADDSET[3:0]			
000C	FSMC_BTR2	Res.		ACCMOD[1:0]		DATLAT[3:0]				CLKDIV[3:0]				BUSTURN[3:0]				DATAST[7:0]								ADDHLD[3:0]				ADDSET[3:0]			
0014	FSMC_BTR3	Res.		ACCMOD[1:0]		DATLAT[3:0]				CLKDIV[3:0]				BUSTURN[3:0]				DATAST[7:0]								ADDHLD[3:0]				ADDSET[3:0]			
001C	FSMC_BTR4	Res.		ACCMOD[1:0]		DATLAT[3:0]				CLKDIV[3:0]				BUSTURN[3:0]				DATAST[7:0]								ADDHLD[3:0]				ADDSET[3:0]			
0104	FSMC_BWTR1	Res.		ACC MOD [1:0]		Res.								BUSTURN[3:0]				DATAST[7:0]								ADDHLD[3:0]				ADDSET[3:0]			
010C	FSMC_BWTR2	Res.		ACC MOD [1:0]		Res.								BUSTURN[3:0]				DATAST[7:0]								ADDHLD[3:0]				ADDSET[3:0]			

Table 253. FSMC register map (continued)

Offset	Register	31	30	29	28	27	26	25	24	23	22	21	20	19	18	17	16	15	14	13	12	11	10	9	8	7	6	5	4	3	2	1	0
0114	FSMC_BWTR3	Res.		ACC MOD [1:0]		Res.								BUSTURN[3:0]				DATAST[7:0]								ADDHLD[3:0]				ADDSET[3:0]			
011C	FSMC_BWTR4	Res.		ACC MOD [1:0]		Res.								BUSTURN[3:0]				DATAST[7:0]								ADDHLD[3:0]				ADDSET[3:0]			
0xA000 0060	FSMC_PCR2	Reserved												ECCPS[2:0]			TAR[2:0]				TCLR[2:0]				Res.	ECCEN		PWID[1:0]		PTYP	PBKEN	PWAITEN	Reserved
0xA000 0080	FSMC_PCR3	Reserved												ECCPS[2:0]			TAR[2:0]				TCLR[2:0]				Res.	ECCEN		PWID[1:0]		PTYP	PBKEN	PWAITEN	Reserved
0xA000 00A0	FSMC_PCR4	Reserved												ECCPS[2:0]			TAR[2:0]				TCLR[2:0]				Res.	ECCEN		PWID[1:0]		PTYP	PBKEN	PWAITEN	Reserved
0xA000 0064	FSMC_SR2	Reserved																								FEMPT	IFEN		ILEN	IREN	IFS	ILS	IRS
0xA000 0084	FSMC_SR3	Reserved																								FEMPT	IFEN		ILEN	IREN	IFS	ILS	IRS
0xA000 00A4	FSMC_SR4	Reserved																								FEMPT	IFEN		ILEN	IREN	IFS	ILS	IRS
0xA000 0068	FSMC_PMEM2	MEMHIZ[7:0]								MEMHOLD[7:0]								MEMWAIT[7:0]								MEMSET[7:0]							
0xA000 0088	FSMC_PMEM3	MEMHIZ[7:0]								MEMHOLD[7:0]								MEMWAIT[7:0]								MEMSET[7:0]							
0xA000 00A8	FSMC_PMEM4	MEMHIZ[7:0]								MEMHOLD[7:0]								MEMWAIT[7:0]								MEMSET[7:0]							
0xA000 006C	FSMC_PATT2	ATTHIZ[7:0]								ATTHOLD[7:0]								ATTWAIT[7:0]								ATTSET[7:0]							
0xA000 008C	FSMC_PATT3	ATTHIZ[7:0]								ATTHOLD[7:0]								ATTWAIT[7:0]								ATTSET[7:0]							
0xA000 00AC	FSMC_PATT4	ATTHIZ[7:0]								ATTHOLD[7:0]								ATTWAIT[7:0]								ATTSET[7:0]							
0xA000 00B0	FSMC_PIO4	IOHIZ[7:0]								IOHOLD[7:0]								IOWAIT[7:0]								IOSET[7:0]							
0xA000 0074	FSMC_ECCR2	ECC[31:0]																															
0xA000 0094	FSMC_ECCR3	ECC[31:0]																															

Refer to *Table 1 on page 64* for the register boundary addresses.

37 Flexible memory controller (FMC)

The Flexible memory controller (FMC) includes three memory controllers:

- The NOR/PSRAM memory controller
- The NAND/PC Card memory controller
- The Synchronous DRAM (SDRAM/Mobile LPSDR SDRAM) controller

This section applies to STM32F42xxx and STM32F43xxx only.

37.1 FMC main features

The FMC functional block makes the interface with synchronous and asynchronous static memories, SDRAM memories, and 16-bit PC memory cards. Its main purposes are:

- to translate AHB transactions into the appropriate external device protocol
- to meet the access time requirements of the external memory devices

All external memories share the addresses, data and control signals with the controller. Each external device is accessed by means of a unique Chip Select. The FMC performs only one access at a time to an external device.

The main features of the FMC controller are the following:

- Interface with static-memory mapped devices including:
  - Static random access memory (SRAM)
  - NOR Flash memory/OneNAND Flash memory
  - PSRAM (4 memory banks)
  - 16-bit PC Card compatible devices
  - Two banks of NAND Flash memory with ECC hardware to check up to 8 Kbytes of data
- Interface with synchronous DRAM (SDRAM/Mobile LPSDR SDRAM) memories
- Burst mode support for faster access to synchronous devices such as NOR Flash memory, PSRAM and SDRAM)
- Programmable continuous clock output for asynchronous and synchronous accesses
- 8-,16- or 32-bit wide data bus
- Independent Chip Select control for each memory bank
- Independent configuration for each memory bank
- Write enable and byte lane select outputs for use with PSRAM, SRAM and SDRAM devices
- External asynchronous wait control
- Write Data FIFO with 16 x33-bit depth
- Write Address FIFO with 16x30-bit depth
- Cacheable Read FIFO with 6 x32-bit depth (6 x14-bit address tag) for SDRAM controller.

The FMC embeds two Write FIFOs: a Write Data FIFO with a 16x33-bit depth and a Write Address FIFO with a 16x30-bit depth.

- The Write Data FIFO stores the AHB data to be written to the memory (up to 32 bits) plus one bit for the AHB transfer (burst or not sequential mode)
- The Write Address FIFO stores the AHB address (up to 28 bits) plus the AHB data size (up to 2 bits). When operating in burst mode, only the start address is stored except when crossing a page boundary (for PSRAM and SDRAM). In this case, the AHB burst is broken into two FIFO entries.

At startup the FMC pins must be configured by the user application. The FMC I/O pins which are not used by the application can be used for other purposes.

The FMC registers that define the external device type and associated characteristics are usually set at boot time and do not change until the next reset or power-up. However, the settings can be changed at any time.

37.2 Block diagram

The FMC consists of five main blocks:

- The AHB interface (including the FMC configuration registers)
- The NOR Flash/PSRAM/SRAM controller
- The NAND Flash/PC Card controller
- The SDRAM controller
- The external device interface

The block diagram is shown in *Figure 456*.

Figure 456. FMC block diagram

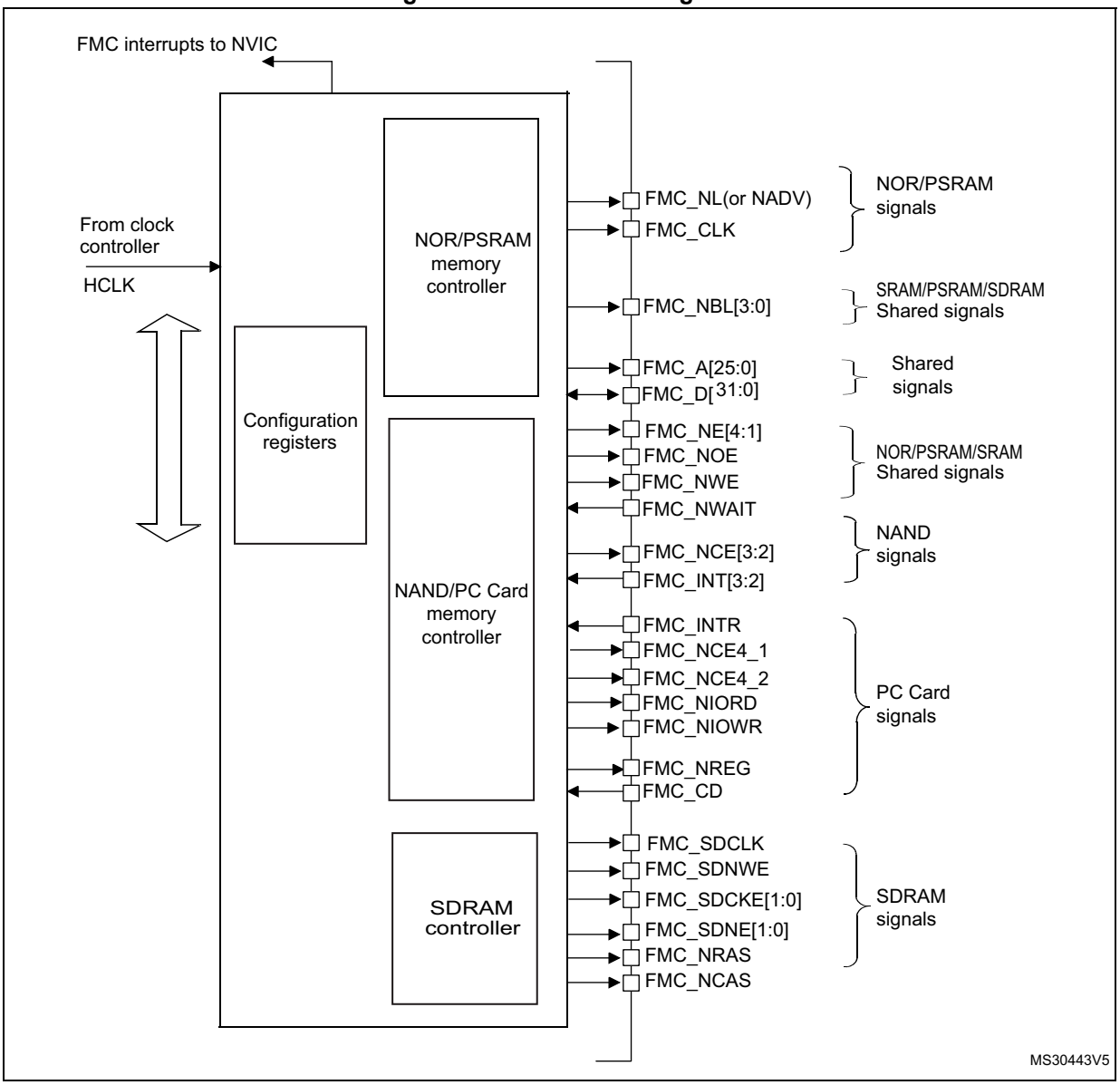

37.3 AHB interface

The AHB slave interface allows internal CPUs and other bus master peripherals to access the external memories.

AHB transactions are translated into the external device protocol. In particular, if the selected external memory is 16- or 8-bit wide, 32-bit wide transactions on the AHB are split into consecutive 16- or 8-bit accesses. The FMC Chip Select (FMC_NEx) does not toggle between consecutive accesses except when performing accesses in mode D with the extended mode enabled.

The FMC generates an AHB error in the following conditions:

- When reading or writing to an FMC bank (Bank 1 to 4) which is not enabled.
- When reading or writing to the NOR Flash bank while the FACCEN bit is reset in the FMC_BCRx register.
- When reading or writing to the PC Card banks while the FMC_CD input pin (Card Presence Detection) is low.
- When writing to a write protected SDRAM bank (WP bit set in the SDRAM_SDCRx register).
- When the SDRAM address range is violated (access to reserved address range)

The effect of an AHB error depends on the AHB master which has attempted the R/W access:

- If the access has been attempted by the Cortex®-M4 with FPU CPU, a hard fault interrupt is generated.
- If the access has been performed by a DMA controller, a DMA transfer error is generated and the corresponding DMA channel is automatically disabled.

The AHB clock (HCLK) is the reference clock for the FMC.

37.3.1 Supported memories and transactions

General transaction rules

The requested AHB transaction data size can be 8-, 16- or 32-bit wide whereas the accessed external device has a fixed data width. This may lead to inconsistent transfers.

Therefore, some simple transaction rules must be followed:

- AHB transaction size and memory data size are equal

  There is no issue in this case.
- AHB transaction size is greater than the memory size:

  In this case, the FMC splits the AHB transaction into smaller consecutive memory accesses to meet the external data width. The FMC Chip Select (FMC_NEx) does not toggle between the consecutive accesses.
- AHB transaction size is smaller than the memory size:

  The transfer may or not be consistent depending on the type of external device:
  - Accesses to devices that have the byte select feature (SRAM, ROM, PSRAM, SDRAM)

    In this case, the FMC allows read/write transactions and accesses the right data through its byte lanes BL[3:0].

    byte to be written are addressed by NBL[3:0].

    All memory byte are read (NBL[3:0] are driven low during read transaction) and the useless ones are discarded.
  - Accesses to devices that do not have the byte select feature (16-bit NOR and NAND Flash memories)

    This situation occurs when a byte access is requested to a 16-bit wide Flash memory. Since the device cannot be accessed in byte mode (only 16-bit words can be read/written from/to the Flash memory), Write transactions and Read transactions are allowed (the controller reads the entire 16-bit memory word and uses only the required byte).

Configuration registers

The FMC can be configured through a set of registers. Refer to *Section 37.5.6*, for a detailed description of the NOR Flash/PSRAM controller registers. Refer to *Section 37.6.8*, for a detailed description of the NAND Flash/PC Card registers and to *Section 37.7.5* for a detailed description of the SDRAM controller registers.

37.4 External device address mapping

From the FMC point of view, the external memory is divided into 6 fixed-size banks of 256 Mbyte each (see *Figure 457*):

- Bank 1 used to address up to 4 NOR Flash memory or PSRAM devices. This bank is split into 4 NOR/PSRAM subbanks with 4 dedicated Chip Selects, as follows:
  - Bank 1 - NOR/PSRAM 1
  - Bank 1 - NOR/PSRAM 2
  - Bank 1 - NOR/PSRAM 3
  - Bank 1 - NOR/PSRAM 4
- Banks 2 and 3 used to address NAND Flash memory devices (1 device per bank)
- Bank 4 used to address a PC Card
- Bank 5 and 6 used to address SDRAM devices (1 device per bank).

For each bank the type of memory to be used can be configured by the user application through the Configuration register.

Figure 457. FMC memory banks

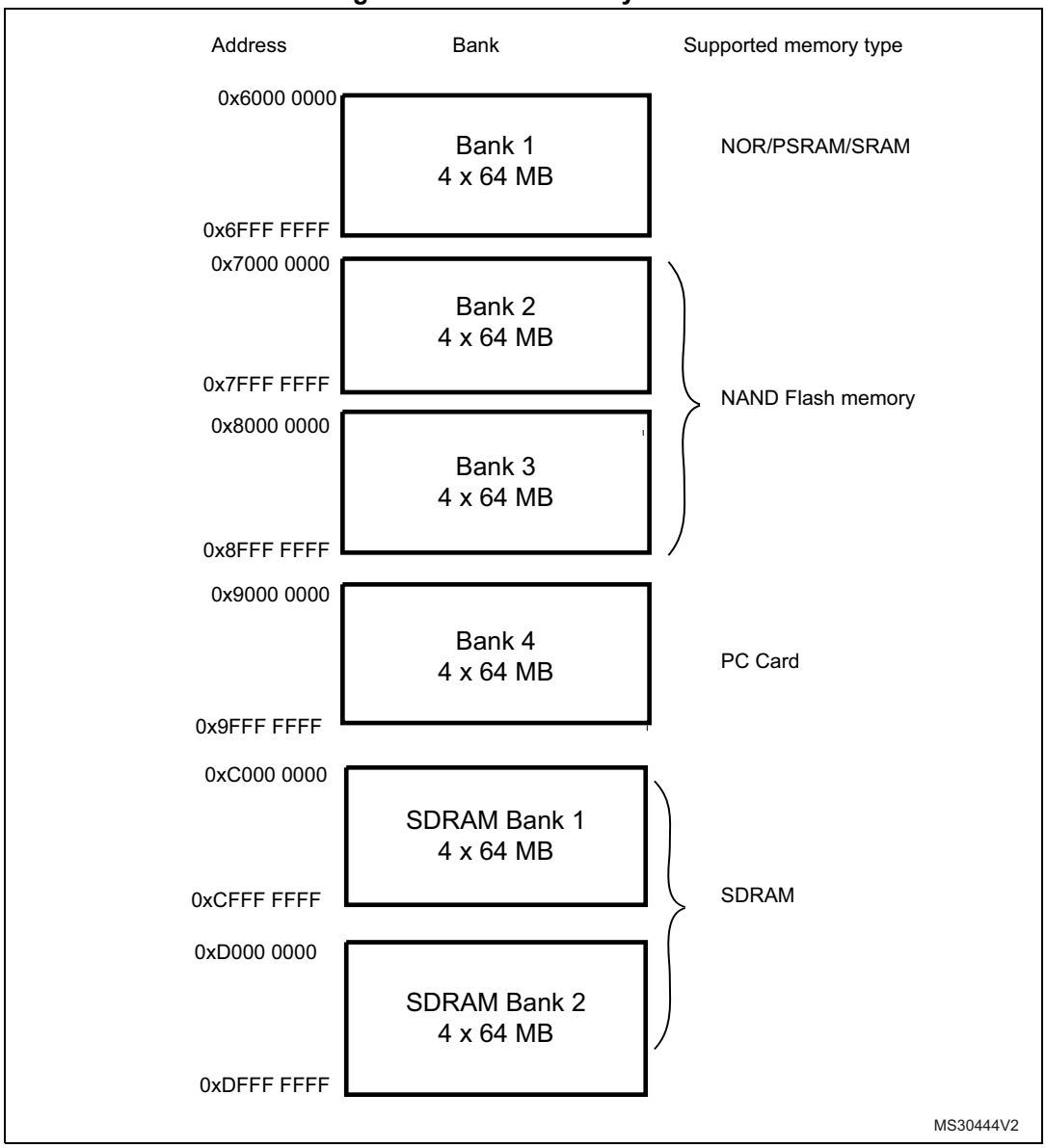

37.4.1 NOR/PSRAM address mapping

HADDR[27:26] bits are used to select one of the four memory banks as shown in *Table 254*.

Table 254. NOR/PSRAM bank selection

HADDR[27:26][1]	Selected bank
00	Bank 1 - NOR/PSRAM 1
01	Bank 1 - NOR/PSRAM 2
10	Bank 1 - NOR/PSRAM 3
11	Bank 1 - NOR/PSRAM 4

1. HADDR are internal AHB address lines that are translated to external memory.

The HADDR[25:0] bits contain the external memory address. Since HADDR is a byte address whereas the memory is addressed at word level, the address actually issued to the memory varies according to the memory data width, as shown in the following table.

Table 255. NOR/PSRAM External memory address

Memory width(1)	Data address issued to the memory	Maximum memory capacity (bits)
8-bit	HADDR[25:0]	64 Mbyte x 8 = 512 Mbit
16-bit	HADDR[25:1] >> 1	64 Mbyte/2 x 16 = 512 Mbit
32-bit	HADDR[25:2] >> 2	64 Mbyte/4 x 32 = 512 Mbit

1. In case of a 16-bit external memory width, the FMC will internally use HADDR[25:1] to generate the address for external memory FMC_A[24:0]. In case of a 32-bit memory width, the FMC will internally use HADDR[25:2] to generate the external address.
Whatever the external memory width, FMC_A[0] should be connected to external memory address A[0].

Wrap support for NOR Flash/PSRAM

Wrap burst mode for synchronous memories is not supported. The memories must be configured in linear burst mode of undefined length.

37.4.2 NAND Flash memory/PC Card address mapping

In this case, three banks are available, each of them being divided into memory areas as indicated in *Table 256*.

Table 256. NAND/PC Card memory mapping and timing registers

Start address	End address	FMC bank	Memory space	Timing register
0x9C00 0000	0x9FFF FFFF	Bank 4 - PC card	I/O	FMC_PIO4 (0xB0)
0x9800 0000	0x9BFF FFFF		Attribute	FMC_PATT4 (0xAC)
0x9000 0000	0x93FF FFFF		Common	FMC_PMEM4 (0xA8)
0x8800 0000	0x8BFF FFFF	Bank 3 - NAND Flash	Attribute	FMC_PATT3 (0x8C)
0x8000 0000	0x83FF FFFF		Common	FMC_PMEM3 (0x88)
0x7800 0000	0x7BFF FFFF	Bank 2- NAND Flash	Attribute	FMC_PATT2 (0x6C)
0x7000 0000	0x73FF FFFF		Common	FMC_PMEM2 (0x68)

For NAND Flash memory, the common and attribute memory spaces are subdivided into three sections (see in *Table 257* below) located in the lower 256 Kbytes:

- Data section (first 64 Kbytes in the common/attribute memory space)
- Command section (second 64 Kbytes in the common / attribute memory space)
- Address section (next 128 Kbytes in the common / attribute memory space)

Table 257. NAND bank selection

Section name	HADDR[17:16]	Address range
Address section	1X	0x020000-0x03FFFF
Command section	01	0x010000-0x01FFFF
Data section	00	0x000000-0x0FFFF

The application software uses the 3 sections to access the NAND Flash memory:

- **To send a command to NAND Flash memory**, the software must write the command value to any memory location in the command section.
- **To specify the NAND Flash address that must be read or written**, the software must write the address value to any memory location in the address section. Since an address can be 4 or 5 byte long (depending on the actual memory size), several consecutive write operations to the address section are required to specify the full address.
- **To read or write data,** the software reads or writes the data from/to any memory location in the data section.

Since the NAND Flash memory automatically increments addresses, there is no need to increment the address of the data section to access consecutive memory locations.

37.4.3 SDRAM address mapping

The HADDR[28] bit (internal AHB address line 28) is used to select one of the two memory banks as indicated in *Table 258*.

Table 258. SDRAM bank selection

HADDR[28]	Selected bank	Control register	Timing register
0	SDRAM Bank1	FMC_SDCR1	FMC_SDTR1
1	SDRAM Bank2	FMC_SDCR2	FMC_SDTR2

The following table shows SDRAM mapping for an 13-bit row ,a 11-bit column and 4 internal bank configurations.

Table 259. SDRAM address mapping

Memory width(1)	Internal bank	Row address	Column address(2)	Maximum memory capacity (Mbyte)
8-bit	HADDR[25:24]	HADDR[23:11]	HADDR[10:0]	64 Mbyte: 4 x 8K x 2K
16-bit	HADDR[26:25]	HADDR[24:12]	HADDR[11:1]	128 Mbyte: 4 x 8K x 2K x 2
32-bit	HADDR[27:26]	HADDR[25:13]	HADDR[12:2]	256 Mbyte: 4 x 8K x 2K x 4

1. When interfacing with a 16-bit memory, the FMC internally uses the HADDR[11:1] internal AHB address lines to generate the external address. When interfacing with a 32-bit memory, the FMC internally uses HADDR[12:2] lines to generate the external address. Whatever the memory width, FMC_A[0] has to be connected to the external memory address A[0].
2. The AutoPrecharge is not supported. FMC_A[10] must be connected to the external memory address A[10] but it will be always driven 'low'.

The HADDR[27:0] bits are translated to external SDRAM address depending on the SDRAM controller configuration:

- Data size:8, 16 or 32 bits
- Row size:11, 12 or 13 bits
- Column size: 8, 9, 10 or 11 bits
- Number of internal banks: two or four internal banks

Table 260 to *Table* shows the SDRAM address mapping versus the SDRAM controller configuration.

Table 260. SDRAM address mapping with 8-bit data bus width(1)(2)

Row size configuration	HADDR(AHB Internal Address Lines)																											
	27	26	25	24	23	22	21	20	19	18	17	16	15	14	13	12	11	10	9	8	7	6	5	4	3	2	1	0
11-bit row size configuration	Res.							Bank [1:0]	Row[10:0]												Column[7:0]							
	Res.						Bank [1:0]	Row[10:0]												Column[8:0]								
	Res.					Bank [1:0]	Row[10:0]												Column[9:0]									
	Res.				Bank [1:0]	Row[10:0]												Column[10:0]										
12-bit row size configuration	Res.						Bank [1:0]	Row[11:0]												Column[7:0]								
	Res.					Bank [1:0]	Row[11:0]													Column[8:0]								
	Res.				Bank [1:0]	Row[11:0]													Column[9:0]									
	Res.			Bank [1:0]	Row[11:0]													Column[10:0]										
13-bit row size configuration	Res.					Bank [1:0]	Row[12:0]													Column[7:0]								
	Res.				Bank [1:0]	Row[12:0]														Column[8:0]								
	Res.			Bank [1:0]	Row[12:0]														Column[9:0]									
	Res.		Bank [1:0]	Row[12:0]														Column[10:0]										

1. BANK[1:0] are the Bank Address BA[1:0]. When only 2 internal banks are used, BA1 must always be set to '0'.
2. Access to Reserved (Res.) address range generates an AHB error.

Table 261. SDRAM address mapping with 16-bit data bus width(1)(2)

Row size Configuration	HADDR(AHB address Lines)																											
	27	26	25	24	23	22	21	20	19	18	17	16	15	14	13	12	11	10	9	8	7	6	5	4	3	2	1	0
11-bit row size configuration	Res.						Bank [1:0]		Row[10:0]											Column[7:0]								BM0(3)
	Res.					Bank [1:0]			Row[10:0]										Column[8:0]									BM0
	Res.				Bank [1:0]				Row[10:0]									Column[9:0]										BM0
	Res.			Bank [1:0]					Row[10:0]								Column[10:0]											BM0
12-bit row size configuration	Res.					Bank [1:0]			Row[11:0]											Column[7:0]								BM0
	Res.				Bank [1:0]				Row[11:0]										Column[8:0]									BM0
	Res.			Bank [1:0]					Row[11:0]									Column[9:0]										BM0
	Res.		Bank [1:0]						Row[11:0]								Column[10:0]											BM0
13-bit row size configuration	Res.				Bank [1:0]				Row[12:0]											Column[7:0]								BM0
	Res.			Bank [1:0]					Row[12:0]										Column[8:0]									BM0
	Res.		Bank [1:0]						Row[12:0]									Column[9:0]										BM0
	Res.	Bank [1:0]							Row[12:0]								Column[10:0]											BM0

1. BANK[1:0] are the Bank Address BA[1:0]. When only 2 internal banks are used, BA1 must always be set to ‘0’.
2. Access to Reserved space (Res.) generates an AHB error.
3. BM0: is the byte mask for 16-bit access.

Table 262. SDRAM address mapping with 32-bit data bus width(1)(2)

Row size configuration	HADDR(AHB address Lines)																											
	27	26	25	24	23	22	21	20	19	18	17	16	15	14	13	12	11	10	9	8	7	6	5	4	3	2	1	0
11-bit row size configuration	Res.					Bank [1:0]			Row[10:0]										Column[7:0]								BM[1:0](3)	
	Res.				Bank [1:0]				Row[10:0]									Column[8:0]									BM[1:0	
	Res.			Bank [1:0]					Row[10:0]								Column[9:0]										BM[1:0	
	Res.		Bank [1:0]						Row[10:0]							Column[10:0]											BM[1:0	
12-bit row size configuration	Res.				Bank [1:0]				Row[11:0]										Column[7:0]								BM[1:0	
	Res.			Bank [1:0]					Row[11:0]									Column[8:0]									BM[1:0	
	Res.		Bank [1:0]						Row[11:0]								Column[9:0]										BM[1:0	
	Res.	Bank [1:0]							Row[11:0]							Column[10:0]											BM[1:0	

Table 262. SDRAM address mapping with 32-bit data bus width(1)(2) (continued)

Row size configuration	HADDR(AHB address Lines)																											
	27	26	25	24	23	22	21	20	19	18	17	16	15	14	13	12	11	10	9	8	7	6	5	4	3	2	1	0
13-bit row size configuration	Res.			Bank [1:0]	Row[12:0]														Column[7:0]								BM[1:0	
	Res.		Bank [1:0]		Row[12:0]													Column[8:0]									BM[1:0	
	Res.	Bank [1:0]			Row[12:0]												Column[9:0]										BM[1:0	
	Bank [1:0]				Row[12:0]											Column[10:0]											BM[1:0	

1. BANK[1:0] are the Bank Address BA[1:0]. When only 2 internal banks are used, BA1 must always be set to ‘0’.
2. Access to Reserved space (Res.) generates an AHB error.
3. BM[1:0]: is the byte mask for 32-bit access.

37.5 NOR Flash/PSRAM controller

The FMC generates the appropriate signal timings to drive the following types of memories:

- Asynchronous SRAM and ROM
  - 8 bits
  - 16 bits
  - 32 bits
- PSRAM (Cellular RAM)
  - Asynchronous mode
  - Burst mode for synchronous accesses
  - Multiplexed or non-multiplexed
- NOR Flash memory
  - Asynchronous mode
  - Burst mode for synchronous accesses
  - Multiplexed or non-multiplexed

The FMC outputs a unique Chip Select signal, NE[4:1], per bank. All the other signals (addresses, data and control) are shared.

The FMC supports a wide range of devices through a programmable timings among which:

- Programmable wait states (up to 15)
- Programmable bus turnaround cycles (up to 15)
- Programmable output enable and write enable delays (up to 15)
- Independent read and write timings and protocol to support the widest variety of memories and timings
- Programmable continuous clock (FMC_CLK) output.

The FMC Clock (FMC_CLK) is a submultiple of the HCLK clock. It can be delivered to the selected external device either during synchronous accesses only or during asynchronous

and synchronous accesses depending on the CCKEN bit configuration in the FMC_BCR1 register:

- If the CCLKEN bit is reset, the FMC generates the clock (CLK) only during synchronous accesses (Read/write transactions).
- If the CCLKEN bit is set, the FMC generates a continuous clock during asynchronous and synchronous accesses. To generate the FMC_CLK continuous clock, Bank 1 must be configured in synchronous mode (see *Section 37.5.6: NOR/PSRAM controller registers*). Since the same clock is used for all synchronous memories, when a continuous output clock is generated and synchronous accesses are performed, the AHB data size has to be the same as the memory data width (MWID) otherwise the FMC_CLK frequency will be changed depending on AHB data transaction (refer to *Section 37.5.5: Synchronous transactions* for FMC_CLK divider ratio formula).

The size of each bank is fixed and equal to 64 Mbyte. Each bank is configured through dedicated registers (see *Section 37.5.6: NOR/PSRAM controller registers*).

The programmable memory parameters include access times (see *Table 263*) and support for wait management (for PSRAM and NOR Flash accessed in burst mode).

Table 263. Programmable NOR/PSRAM access parameters

Parameter	Function	Access mode	Unit	Min.	Max.
Address setup	Duration of the address setup phase	Asynchronous	AHB clock cycle (HCLK)	0	15
Address hold	Duration of the address hold phase	Asynchronous, muxed I/Os	AHB clock cycle (HCLK)	1	15
Data setup	Duration of the data setup phase	Asynchronous	AHB clock cycle (HCLK)	1	256
Bust turn	Duration of the bus turnaround phase	Asynchronous and synchronous read/write	AHB clock cycle (HCLK)	0	15
Clock divide ratio	Number of AHB clock cycles (HCLK) to build one memory clock cycle (CLK)	Synchronous	AHB clock cycle (HCLK)	2	16
Data latency	Number of clock cycles to issue to the memory before the first data of the burst	Synchronous	Memory clock cycle (CLK)	2	17

37.5.1 External memory interface signals

Table 264, *Table 265* and *Table 266* list the signals that are typically used to interface with NOR Flash memory, SRAM and PSRAM.

Note: The prefix "N" identifies the signals which are active low.

NOR Flash memory, non-multiplexed I/Os

Table 264. Non-multiplexed I/O NOR Flash memory

FMC signal name	I/O	Function
CLK	O	Clock (for synchronous access)
A[25:0]	O	Address bus
D[31:0]	I/O	Bidirectional data bus
NE[x]	O	Chip Select, x = 1..4
NOE	O	Output enable
NWE	O	Write enable
NL(=NADV)	O	Latch enable (this signal is called address valid, NADV, by some NOR Flash devices)
NWAIT	I	NOR Flash wait input signal to the FMC

The maximum capacity is 512 Mbits (26 address lines).

NOR Flash memory, 16-bit multiplexed I/Os

Table 265. 16-bit multiplexed I/O NOR Flash memory

FMC signal name	I/O	Function
CLK	O	Clock (for synchronous access)
A[25:16]	O	Address bus
AD[15:0]	I/O	16-bit multiplexed, bidirectional address/data bus (the 16-bit address A[15:0] and data D[15:0] are multiplexed on the databus)
NE[x]	O	Chip Select, x = 1..4
NOE	O	Output enable
NWE	O	Write enable
NL(=NADV)	O	Latch enable (this signal is called address valid, NADV, by some NOR Flash devices)
NWAIT	I	NOR Flash wait input signal to the FMC

The maximum capacity is 512 Mbits.

PSRAM/SRAM, non-multiplexed I/Os

Table 266. Non-multiplexed I/Os PSRAM/SRAM

FMC signal name	I/O	Function
CLK	O	Clock (only for PSRAM synchronous access)
A[25:0]	O	Address bus
D[31:0]	I/O	Data bidirectional bus

Table 266. Non-multiplexed I/Os PSRAM/SRAM (continued)

FMC signal name	I/O	Function
NE[x]	O	Chip Select, x = 1..4 (called NCE by PSRAM (Cellular RAM i.e. CRAM))
NOE	O	Output enable
NWE	O	Write enable
NL(= NADV)	O	Address valid only for PSRAM input (memory signal name: NADV)
NWAIT	I	PSRAM wait input signal to the FMC
NBL[3]	O	Byte3 Upper byte enable (memory signal name: NUB)
NBL[2]	O	Byte2 Lowed byte enable (memory signal name: NLB)
NBL[1]	O	Byte1 Upper byte enable (memory signal name: NLB)
NBL[0]	O	Byte0 Lower byte enable (memory signal name: NLB)

The maximum capacity is 512 Mbits.

PSRAM, 16-bit multiplexed I/Os

Table 267. 16-Bit multiplexed I/O PSRAM

FMC signal name	I/O	Function
CLK	O	Clock (for synchronous access)
A[25:16]	O	Address bus
AD[15:0]	I/O	16-bit multiplexed, bidirectional address/data bus (the 16-bit address A[15:0] and data D[15:0] are multiplexed on the databus)
NE[x]	O	Chip Select, x = 1..4 (called NCE by PSRAM (Cellular RAM i.e. CRAM))
NOE	O	Output enable
NWE	O	Write enable
NL(= NADV)	O	Address valid PSRAM input (memory signal name: NADV)
NWAIT	I	PSRAM wait input signal to the FMC
NBL[1]	O	Upper byte enable (memory signal name: NUB)
NBL[0]	O	Lowed byte enable (memory signal name: NLB)

The maximum capacity is 512 Mbits (26 address lines).

37.5.2 Supported memories and transactions

Table 268 below shows an example of the supported devices, access modes and transactions when the memory data bus is 16-bit wide for NOR Flash memory, PSRAM and SRAM. The transactions not allowed (or not supported) by the FMC are shown in gray in this example.

Table 268. NOR Flash/PSRAM: Example of supported memories and transactions

Device	Mode	R/W	AHB data size	Memory data size	Allowed/ not allowed	Comments
NOR Flash (muxed I/Os and nonmuxed I/Os)	Asynchronous	R	8	16	Y	
	Asynchronous	W	8	16	N	
	Asynchronous	R	16	16	Y	
	Asynchronous	W	16	16	Y	
	Asynchronous	R	32	16	Y	Split into 2 FMC accesses
	Asynchronous	W	32	16	Y	Split into 2 FMC accesses
	Asynchronous page	R	-	16	N	Mode is not supported
	Synchronous	R	8	16	N	
	Synchronous	R	16	16	Y	
	Synchronous	R	32	16	Y	
PSRAM (multiplexed I/Os and non-multiplexed I/Os)	Asynchronous	R	8	16	Y	
	Asynchronous	W	8	16	Y	Use of byte lanes NBL[1:0]
	Asynchronous	R	16	16	Y	
	Asynchronous	W	16	16	Y	
	Asynchronous	R	32	16	Y	Split into 2 FMC accesses
	Asynchronous	W	32	16	Y	Split into 2 FMC accesses
	Asynchronous page	R	-	16	N	Mode is not supported
	Synchronous	R	8	16	N	
	Synchronous	R	16	16	Y	
	Synchronous	R	32	16	Y	
	Synchronous	W	8	16	Y	Use of byte lanes NBL[1:0]
	Synchronous	W	16/32	16	Y	
SRAM and ROM	Asynchronous	R	8 / 16	16	Y	
	Asynchronous	W	8 / 16	16	Y	Use of byte lanes NBL[1:0]
	Asynchronous	R	32	16	Y	Split into 2 FMC accesses
	Asynchronous	W	32	16	Y	Split into 2 FMC accesses Use of byte lanes NBL[1:0]

37.5.3 General timing rules

Signals synchronization

- All controller output signals change on the rising edge of the internal clock (HCLK)
- In synchronous mode (read or write), all output signals change on the rising edge of HCLK. Whatever the CLKDIV value, all outputs change as follows:
  - NOEL/NWEL/ NEL/NADVL/ NADVH /NBLL/ Address valid outputs change on the falling edge of FMC_CLK clock.
  - NOEH/ NWEH / NEH/ NOEH/NBLH/ Address invalid outputs change on the rising edge of FMC_CLK clock.

37.5.4 NOR Flash/PSRAM controller asynchronous transactions

Asynchronous static memories (NOR Flash, PSRAM, SRAM)

- Signals are synchronized by the internal clock HCLK. This clock is not issued to the memory
- The FMC always samples the data before de-asserting the NOE signal. This guarantees that the memory data hold timing constraint is met (minimum Chip Enable high to data transition is usually 0 ns)
- If the extended mode is enabled (EXTMOD bit is set in the FMC_BCRx register), up to four extended modes (A, B, C and D) are available. It is possible to mix A, B, C and D modes for read and write operations. For example, read operation can be performed in mode A and write in mode B.
- If the extended mode is disabled (EXTMOD bit is reset in the FMC_BCRx register), the FMC can operate in Mode1 or Mode2 as follows:
  - Mode 1 is the default mode when SRAM/PSRAM memory type is selected (MTYP[1:0] = 0x0 or 0x01 in the FMC_BCRx register)
  - Mode 2 is the default mode when NOR memory type is selected (MTYP[1:0] = 0x10 in the FMC_BCRx register).

Mode 1 - SRAM/PSRAM (CRAM)

The next figures show the read and write transactions for the supported modes followed by the required configuration of FMC _BCRx, and FMC_BTRx/FMC_BWTRx registers.

Figure 458. Mode1 read access waveforms

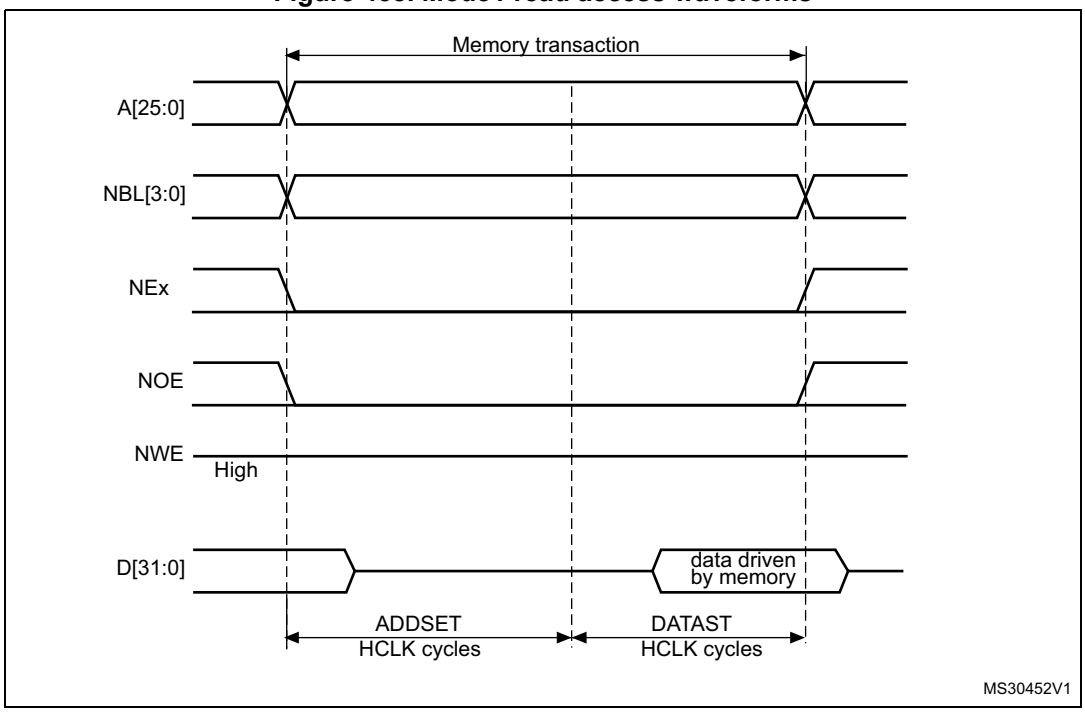

Figure 459. Mode1 write access waveforms

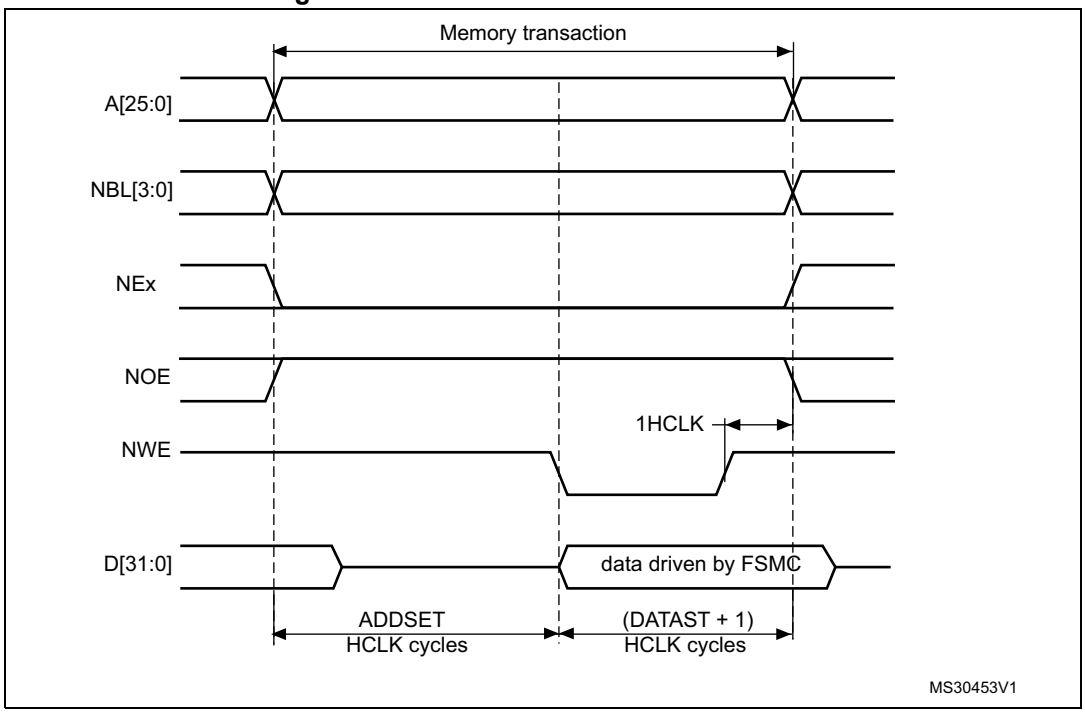

The one HCLK cycle at the end of the write transaction helps guarantee the address and data hold time after the NWE rising edge. Due to the presence of this HCLK cycle, the DATAST value must be greater than zero (DATAST > 0).

Table 269. FMC_BCRx bit fields

Bit number	Bit name	Value to set
31-21	Reserved	0x000
20	CCLKEN	As needed
19	CBURSTRW	0x0 (no effect in asynchronous mode)
18:16	CPSIZE	0x0 (no effect in asynchronous mode)
15	ASYNCWAIT	Set to 1 if the memory supports this feature. Otherwise keep at 0.
14	EXTMOD	0x0
13	WAITEN	0x0 (no effect in asynchronous mode)
12	WREN	As needed
11	WAITCFG	Don’t care
10	WRAPMOD	0x0
9	WAITPOL	Meaningful only if bit 15 is 1
8	BURSTEN	0x0
7	Reserved	0x1
6	FACCEN	Don’t care
5-4	MWID	As needed
3-2	MTYP[1:0]	As needed, exclude 0x2 (NOR Flash memory)
1	MUXE	0x0
0	MBKEN	0x1

Table 270. FMC_BTRx bit fields

Bit number	Bit name	Value to set
31:30	Reserved	0x0
29-28	ACCMOD	Don’t care
27-24	DATLAT	Don’t care
23-20	CLKDIV	Don’t care
19-16	BUSTURN	Time between NEx high to NEx low (BUSTURN HCLK)
15-8	DATAST	Duration of the second access phase (DATAST+1 HCLK cycles for write accesses, DATAST HCLK cycles for read accesses).

Table 270. FMC_BTRx bit fields (continued)

Bit number	Bit name	Value to set
7-4	ADDHLD	Don't care
3-0	ADDSET	Duration of the first access phase (ADDSET HCLK cycles). Minimum value for ADDSET is 0.

Mode A - SRAM/PSRAM (CRAM) OE toggling

Figure 460. ModeA read access waveforms

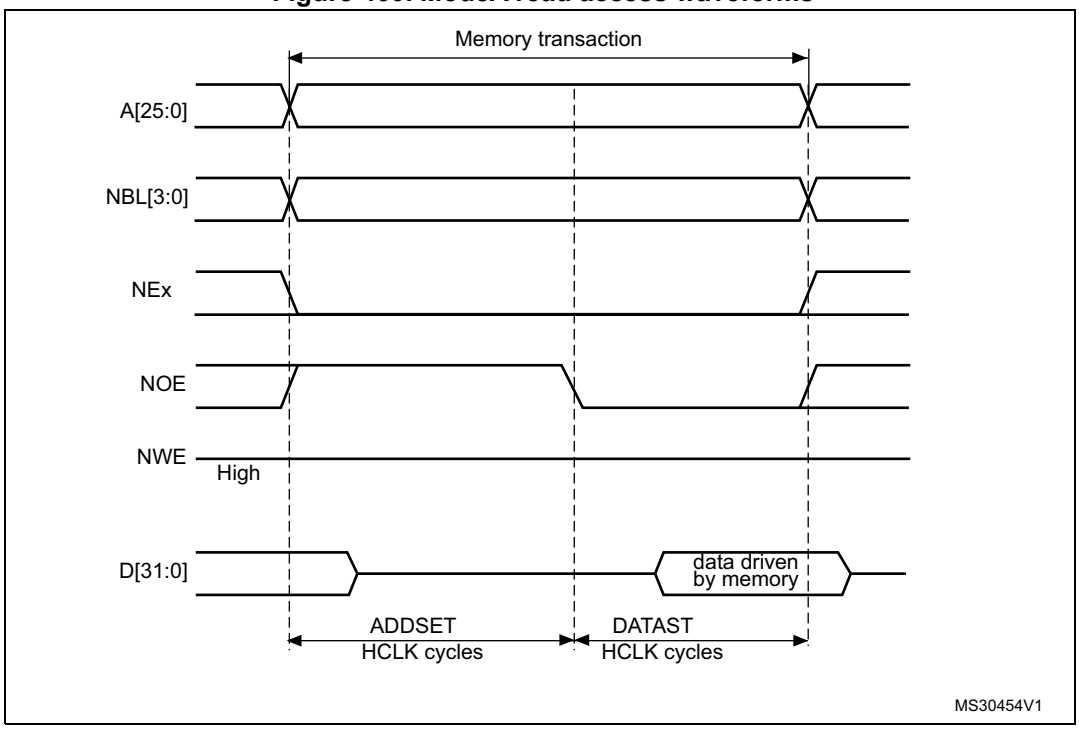

1. NBL[3:0] are driven low during the read access

Figure 461. ModeA write access waveforms

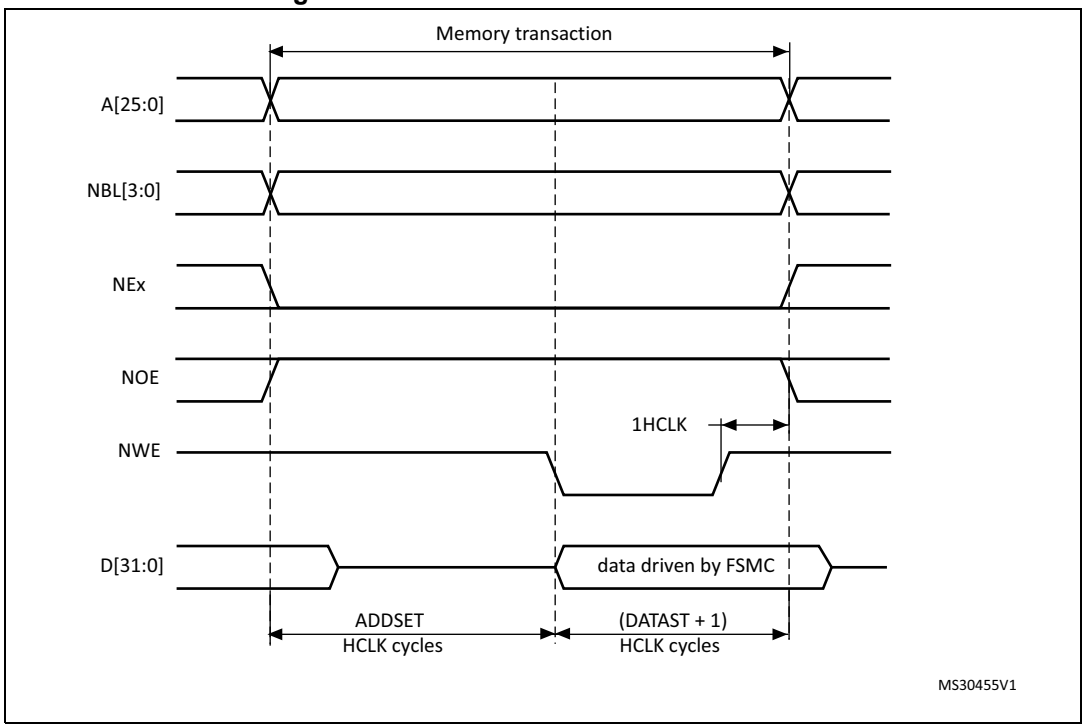

The differences compared with mode1 are the toggling of NOE and the independent read and write timings.

Table 271. FMC_BCRx bit fields

Bit number	Bit name	Value to set
31-21	Reserved	0x000
20	CCLKEN	As needed
19	CBURSTRW	0x0 (no effect in asynchronous mode)
18:16	CPSIZE	0x0 (no effect in asynchronous mode)
15	ASYNCWAIT	Set to 1 if the memory supports this feature. Otherwise keep at 0.
14	EXTMOD	0x1
13	WAITEN	0x0 (no effect in asynchronous mode)
12	WREN	As needed
11	WAITCFG	Don’t care
10	WRAPMOD	0x0
9	WAITPOL	Meaningful only if bit 15 is 1
8	BURSTEN	0x0
7	Reserved	0x1
6	FACCEN	Don’t care

Table 271. FMC_BCRx bit fields (continued)

Bit number	Bit name	Value to set
5-4	MWID	As needed
3-2	MTYP[1:0]	As needed, exclude 0x2 (NOR Flash memory)
1	MUXEN	0x0
0	MBKEN	0x1

Table 272. FMC_BTRx bit fields

Bit number	Bit name	Value to set
31:30	Reserved	0x0
29-28	ACCMOD	0x0
27-24	DATLAT	Don't care
23-20	CLKDIV	Don't care
19-16	BUSTURN	Time between NEx high to NEx low (BUSTURN HCLK)
15-8	DATAST	Duration of the second access phase (DATAST HCLK cycles) for read accesses.
7-4	ADDHLD	Don't care
3-0	ADDSET[3:0]	Duration of the first access phase (ADDSET HCLK cycles) for read accesses. Minimum value for ADDSET is 0.

Table 273. FMC_BWTRx bit fields

Bit number	Bit name	Value to set
31:30	Reserved	0x0
29-28	ACCMOD	0x0
27-24	DATLAT	Don't care
23-20	CLKDIV	Don't care
19-16	BUSTURN	Time between NEx high to NEx low (BUSTURN HCLK)
15-8	DATAST	Duration of the second access phase (DATAST HCLK cycles) for write accesses.
7-4	ADDHLD	Don't care
3-0	ADDSET[3:0]	Duration of the first access phase (ADDSET HCLK cycles) for write accesses. Minimum value for ADDSET is 0.

Mode 2/B - NOR Flash

Figure 462. Mode2 and mode B read access waveforms

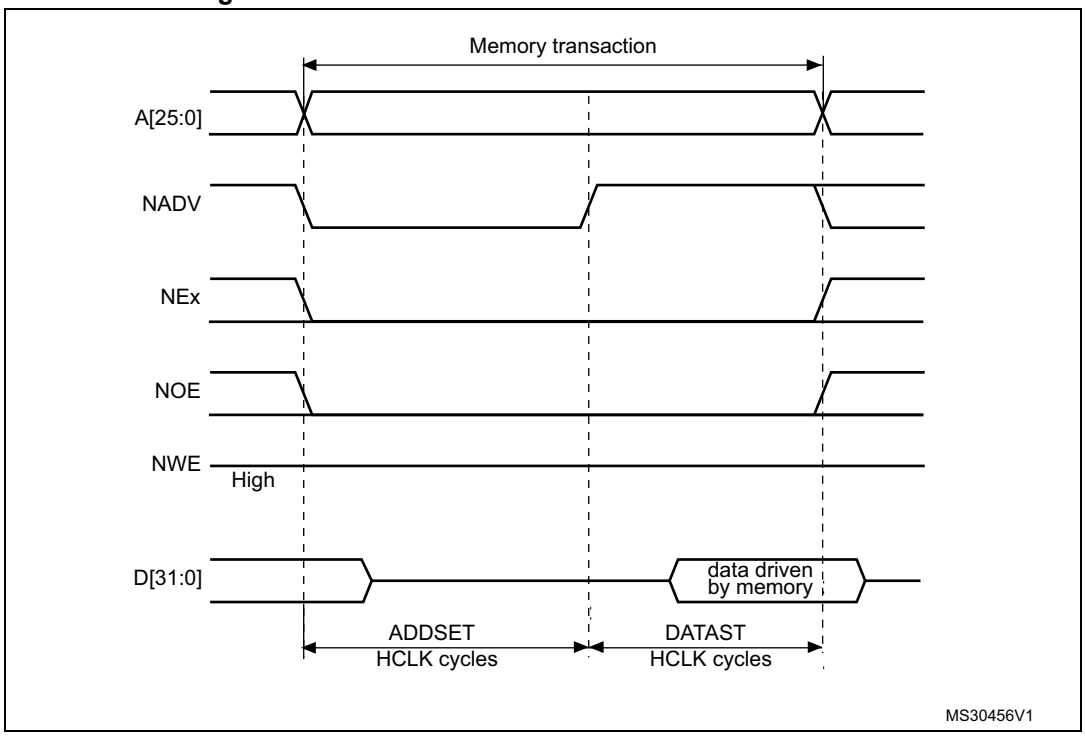

1. NBL[3:0] are driven low during the read access

Figure 463. Mode2 write access waveforms

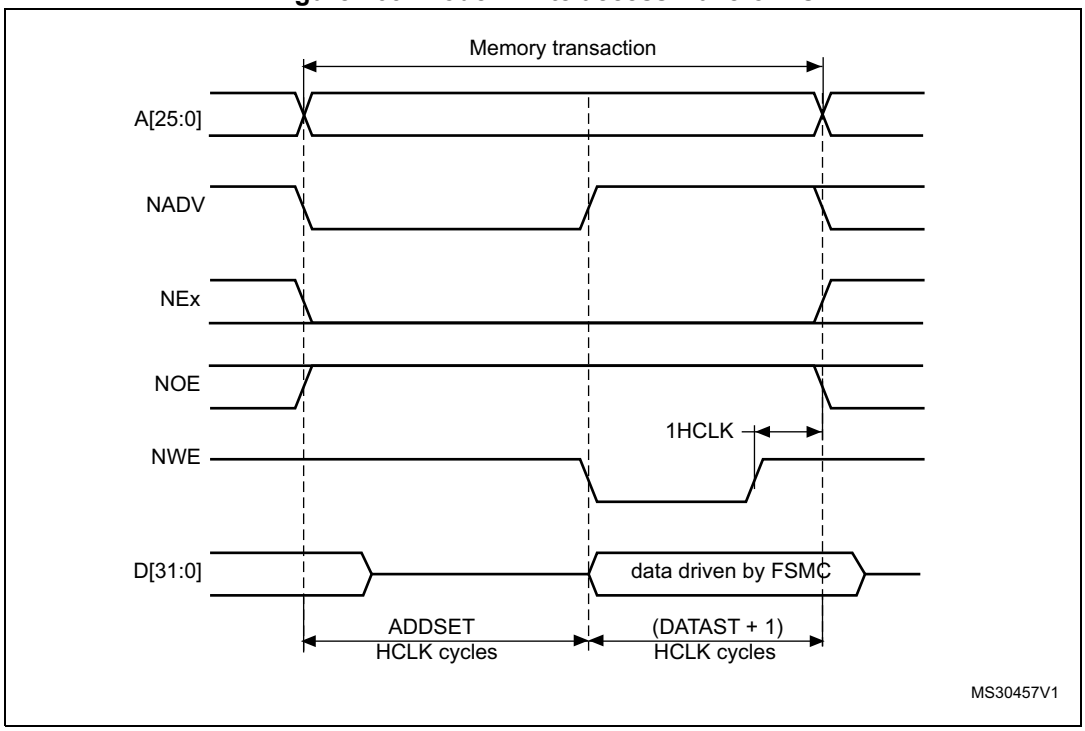

Figure 464. ModeB write access waveforms

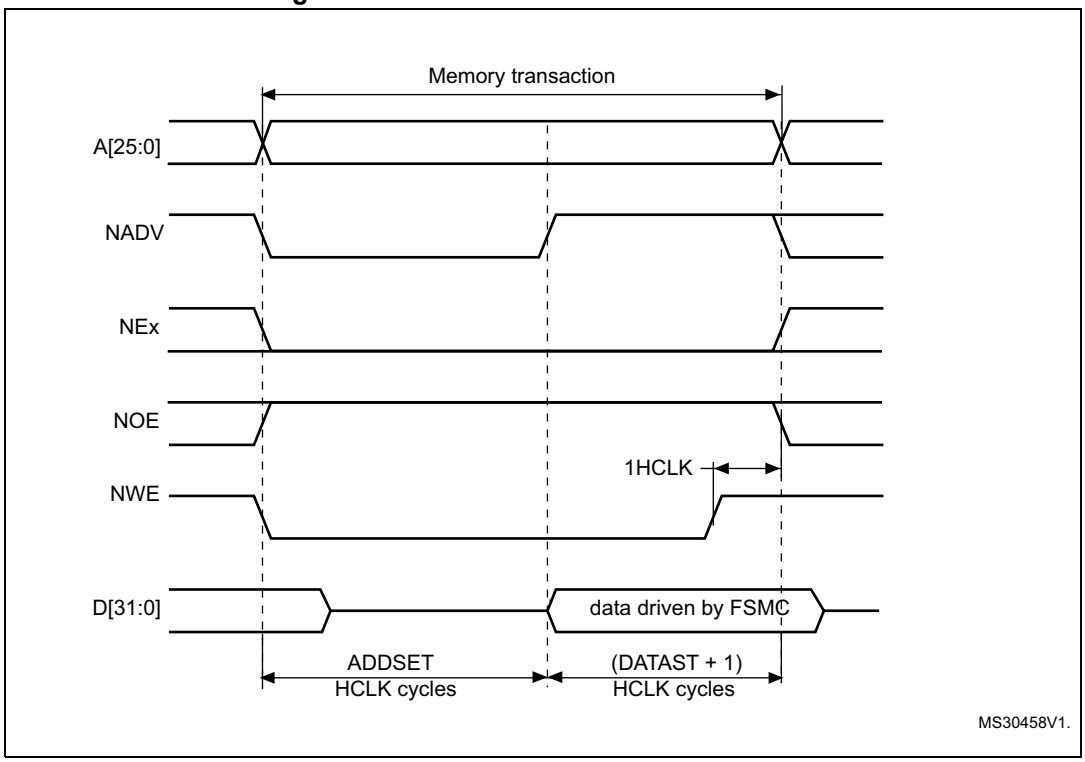

The differences with mode1 are the toggling of NWE and the independent read and write timings when extended mode is set (Mode B).

Table 274. FMC_BCRx bit fields

Bit number	Bit name	Value to set
31-21	Reserved	0x000
20	CCLKEN	As needed
19	CBURSTRW	0x0 (no effect in asynchronous mode)
18:16	CPSIZE	0x0 (no effect in asynchronous mode)
15	ASYNCWAIT	Set to 1 if the memory supports this feature. Otherwise keep at 0.
14	EXTMOD	0x1 for mode B, 0x0 for mode 2
13	WAITEN	0x0 (no effect in asynchronous mode)
12	WREN	As needed
11	WAITCFG	Don’t care
10	WRAPMOD	0x0
9	WAITPOL	Meaningful only if bit 15 is 1
8	BURSTEN	0x0
7	Reserved	0x1
6	FACCEN	0x1

Table 274. FMC_BCRx bit fields (continued)

Bit number	Bit name	Value to set
5-4	MWID	As needed
3-2	MTYP[1:0]	0x2 (NOR Flash memory)
1	MUXEN	0x0
0	MBKEN	0x1

Table 275. FMC_BTRx bit fields

Bit number	Bit name	Value to set
31-30	Reserved	0x0
29-28	ACCMOD	0x1 if extended mode is set
27-24	DATLAT	Don’t care
23-20	CLKDIV	Don’t care
19-16	BUSTURN	Time between NEx high to NEx low (BUSTURN HCLK)
15-8	DATAST	Duration of the access second phase (DATAST HCLK cycles) for read accesses.
7-4	ADDHLD	Don’t care
3-0	ADDSET[3:0]	Duration of the access first phase (ADDSET HCLK cycles) for read accesses. Minimum value for ADDSET is 0.

Table 276. FMC_BWTRx bit fields

Bit number	Bit name	Value to set
31-30	Reserved	0x0
29-28	ACCMOD	0x1 if extended mode is set
27-24	DATLAT	Don’t care
23-20	CLKDIV	Don’t care
19-16	BUSTURN	Time between NEx high to NEx low (BUSTURN HCLK)
15-8	DATAST	Duration of the access second phase (DATAST HCLK cycles) for write accesses.
7-4	ADDHLD	Don’t care
3-0	ADDSET[3:0]	Duration of the access first phase (ADDSET HCLK cycles) for write accesses. Minimum value for ADDSET is 0.

Note: The FMC_BWTRx register is valid only if the extended mode is set (mode B), otherwise its content is don’t care.

Mode C - NOR Flash - OE toggling

Figure 465. ModeC read access waveforms

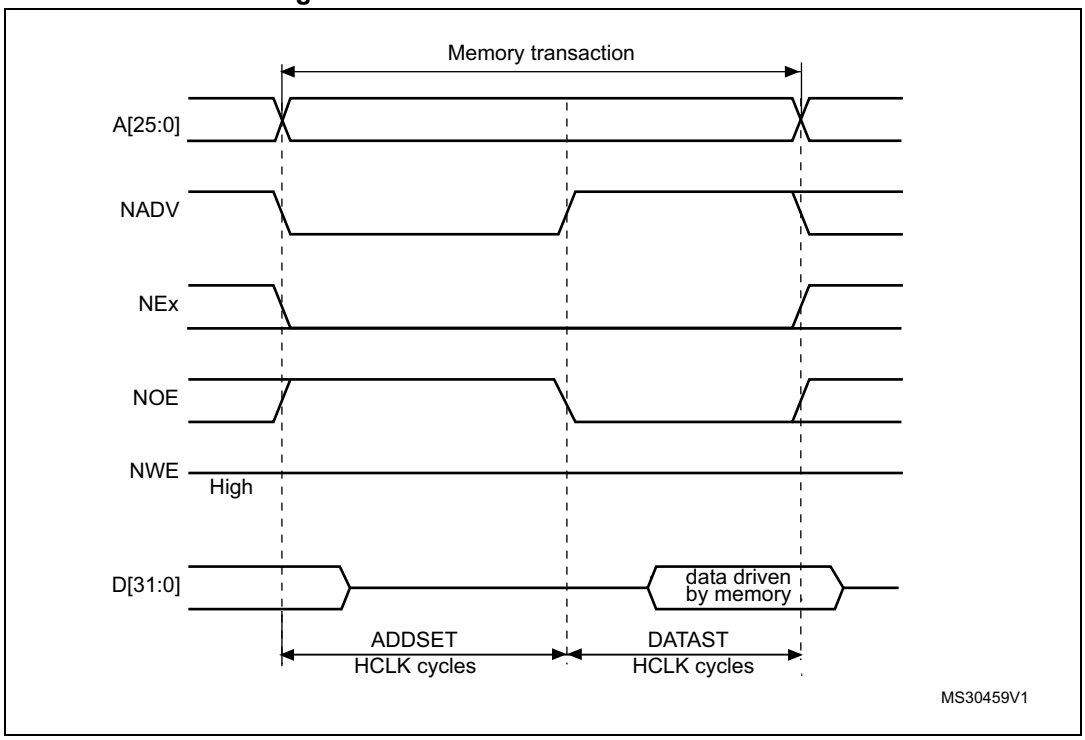

Figure 466. ModeC write access waveforms

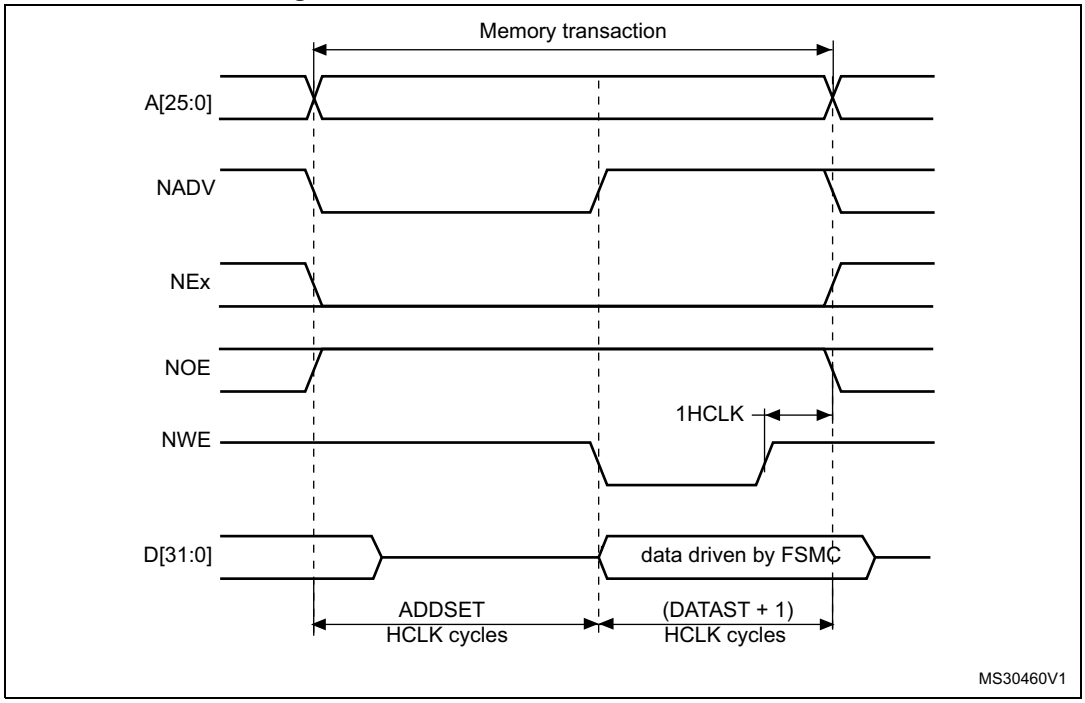

The differences compared with mode1 are the toggling of NOE and the independent read and write timings.

Table 277. FMC_BCRx bit fields

Bit No.	Bit name	Value to set
31-21	Reserved	0x000
20	CCLKEN	As needed
19	CBURSTRW	0x0 (no effect in asynchronous mode)
18:16	Reserved	0x0 (no effect in asynchronous mode)
15	ASYNCWAIT	Set to 1 if the memory supports this feature. Otherwise keep at 0.
14	EXTMOD	0x1
13	WAITEN	0x0 (no effect in asynchronous mode)
12	WREN	As needed
11	WAITCFG	Don’t care
10	WRAPMOD	0x0
9	WAITPOL	Meaningful only if bit 15 is 1
8	BURSTEN	0x0
7	Reserved	0x1
6	FACCEN	0x1
5-4	MWID	As needed
3-2	MTYP[1:0]	0x02 (NOR Flash memory)
1	MUXEN	0x0
0	MBKEN	0x1

Table 278. FMC_BTRx bit fields

Bit No.	Bit name	Value to set
31:30	Reserved	0x0
29-28	ACCMOD	0x2
27-24	DATLAT	0x0
23-20	CLKDIV	0x0
19-16	BUSTURN	Time between NEx high to NEx low (BUSTURN HCLK)
15-8	DATAST	Duration of the second access phase (DATAST HCLK cycles) for read accesses.
7-4	ADDHLD	Don’t care
3-0	ADDSET[3:0]	Duration of the first access phase (ADDSET HCLK cycles) for read accesses. Minimum value for ADDSET is 0.

Table 279. FMC_BWTRx bit fields

Bit No.	Bit name	Value to set
31:30	Reserved	0x0
29-28	ACCMOD	0x2
27-24	DATLAT	Don't care
23-20	CLKDIV	Don't care
19-16	BUSTURN	Time between NEx high to NEx low (BUSTURN HCLK)
15-8	DATAST	Duration of the second access phase (DATAST HCLK cycles) for write accesses.
7-4	ADDHLD	Don't care
3-0	ADDSET[3:0]	Duration of the first access phase (ADDSET HCLK cycles) for write accesses. Minimum value for ADDSET is 0.

Mode D - asynchronous access with extended address

Figure 467. ModeD read access waveforms

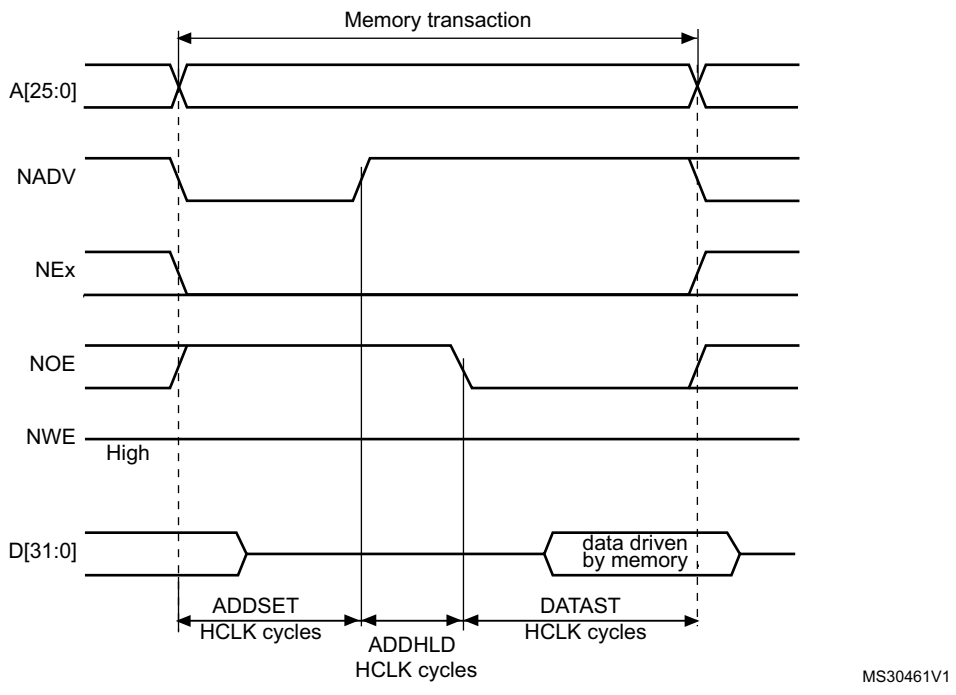

Figure 468. ModeD write access waveforms

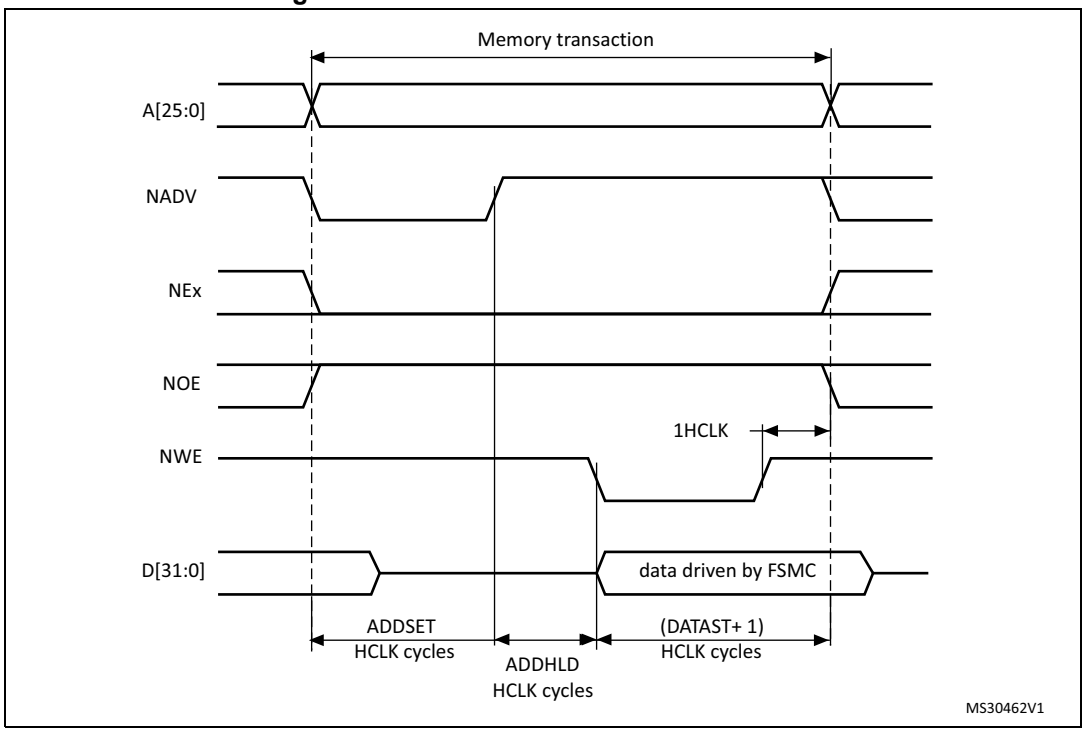

The differences with mode1 are the toggling of NOE that goes on toggling after NADV changes and the independent read and write timings.

Table 280. FMC_BCRx bit fields

Bit No.	Bit name	Value to set
31-21	Reserved	0x000
20	CCLKEN	As needed
19	CBURSTRW	0x0 (no effect in asynchronous mode)
18:16	CPSIZE	0x0 (no effect in asynchronous mode)
15	ASYNCWAIT	Set to 1 if the memory supports this feature. Otherwise keep at 0.
14	EXTMOD	0x1
13	WAITEN	0x0 (no effect in asynchronous mode)
12	WREN	As needed
11	WAITCFG	Don’t care
10	WRAPMOD	0x0
9	WAITPOL	Meaningful only if bit 15 is 1
8	BURSTEN	0x0
7	Reserved	0x1
6	FACCEN	Set according to memory support
5-4	MWID	As needed

Table 280. FMC_BCRx bit fields (continued)

Bit No.	Bit name	Value to set
3-2	MTYP[1:0]	As needed
1	MUXEN	0x0
0	MBKEN	0x1

Table 281. FMC_BTRx bit fields

Bit No.	Bit name	Value to set
31:30	Reserved	0x0
29-28	ACCMOD	0x3
27-24	DATLAT	Don’t care
23-20	CLKDIV	Don’t care
19-16	BUSTURN	Time between NEx high to NEx low (BUSTURN HCLK)
15-8	DATAST	Duration of the second access phase (DATAST HCLK cycles) for read accesses.
7-4	ADDHLD	Duration of the middle phase of the read access (ADDHLD HCLK cycles)
3-0	ADDSET[3:0]	Duration of the first access phase (ADDSET HCLK cycles) for read accesses. Minimum value for ADDSET is 1.

Table 282. FMC_BWTRx bit fields

Bit No.	Bit name	Value to set
31:30	Reserved	0x0
29-28	ACCMOD	0x3
27-24	DATLAT	Don’t care
23-20	CLKDIV	Don’t care
19-16	BUSTURN	Time between NEx high to NEx low (BUSTURN HCLK)
15-8	DATAST	Duration of the second access phase (DATAST + 1 HCLK cycles) for write accesses.
7-4	ADDHLD	Duration of the middle phase of the write access (ADDHLD HCLK cycles)
3-0	ADDSET[3:0]	Duration of the first access phase (ADDSET HCLK cycles) for write accesses. Minimum value for ADDSET is 1.

Muxed mode - multiplexed asynchronous access to NOR Flash memory

Figure 469. Muxed read access waveforms

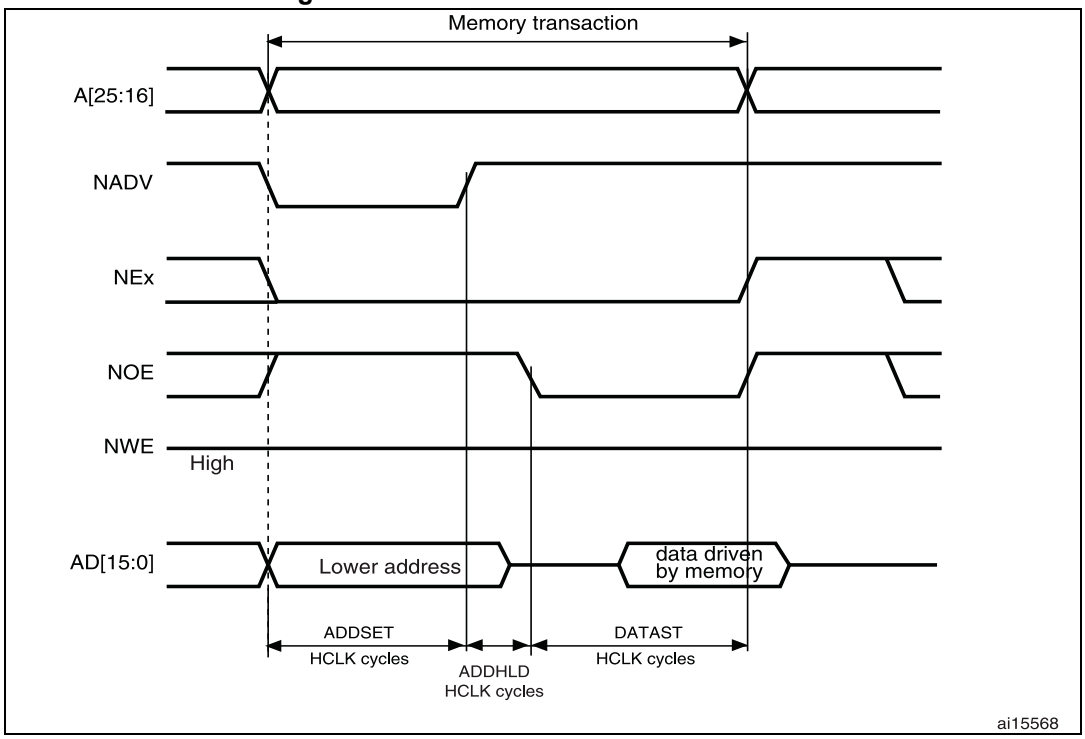

Figure 470. Muxed write access waveforms

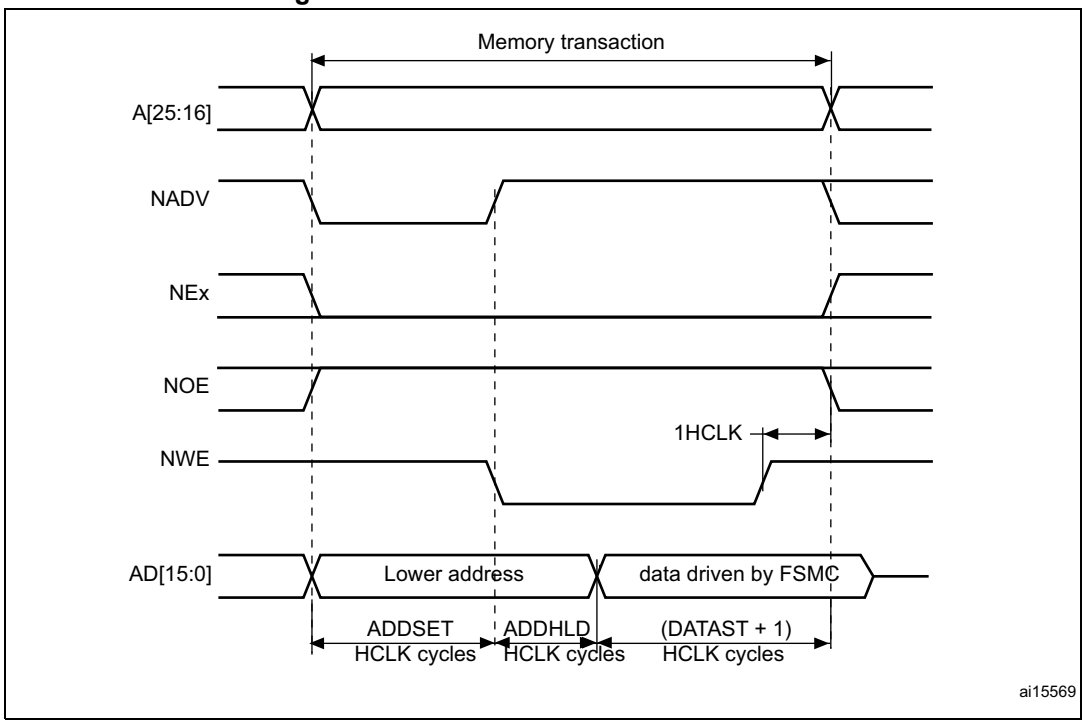

The difference with mode D is the drive of the lower address byte(s) on the data bus.

Table 283. FMC_BCRx bit fields

Bit No.	Bit name	Value to set
31-21	Reserved	0x000
20	CCLKEN	As needed
19	CBURSTRW	0x0 (no effect in asynchronous mode)
18:16	CPSIZE	0x0 (no effect in asynchronous mode)
15	ASYNCWAIT	Set to 1 if the memory supports this feature. Otherwise keep at 0.
14	EXTMOD	0x0
13	WAITEN	0x0 (no effect in asynchronous mode)
12	WREN	As needed
11	WAITCFG	Don’t care
10	WRAPMOD	0x0
9	WAITPOL	Meaningful only if bit 15 is 1
8	BURSTEN	0x0
7	Reserved	0x1
6	FACCEN	0x1
5-4	MWID	As needed
3-2	MTYP[1:0]	0x2 (NOR Flash memory)
1	MUXEN	0x1
0	MBKEN	0x1

Table 284. FMC_BTRx bit fields

Bit No.	Bit name	Value to set
31:30	Reserved	0x0
29-28	ACCMOD	0x0
27-24	DATLAT	Don’t care
23-20	CLKDIV	Don’t care
19-16	BUSTURN	Time between NEx high to NEx low (BUSTURN HCLK)
15-8	DATAST	Duration of the second access phase (DATAST HCLK cycles for read accesses and DATAST+1 HCLK cycles for write accesses).
7-4	ADDHLD	Duration of the middle phase of the access (ADDHLD HCLK cycles).
3-0	ADDSET[3:0]	Duration of the first access phase (ADDSET HCLK cycles). Minimum value for ADDSET is 1.

WAIT management in asynchronous accesses

If the asynchronous memory asserts the WAIT signal to indicate that it is not yet ready to accept or to provide data, the ASYNCWAIT bit has to be set in FMC_BCRx register.

If the WAIT signal is active (high or low depending on the WAITPOL bit), the second access phase (Data setup phase), programmed by the DATAST bits, is extended until WAIT becomes inactive. Unlike the data setup phase, the first access phases (Address setup and Address hold phases), programmed by the ADDSET[3:0] and ADDHLD bits, are not WAIT sensitive and so they are not prolonged.

The data setup phase must be programmed so that WAIT can be detected 4 HCLK cycles before the end of the memory transaction. The following cases must be considered:

1. The memory asserts the WAIT signal aligned to NOE/NWE which toggles:

$$DATAST \geq (4 \times HCLK) + max_wait_assertion_time$$

2. The memory asserts the WAIT signal aligned to NEx (or NOE/NWE not toggling):

   if

$$max_wait_assertion_time > address_phase + hold_phase$$

   then:

$$DATAST \geq (4 \times HCLK) + (max_wait_assertion_time - address_phase - hold_phase)$$

   otherwise

$$DATAST \geq 4 \times HCLK$$

   where max_wait_assertion_time is the maximum time taken by the memory to assert the WAIT signal once NEx/NOE/NWE is low.

Figure 471 and *Figure 472* show the number of HCLK clock cycles that are added to the memory access phase after WAIT is released by the asynchronous memory (independently of the above cases).

Figure 471. Asynchronous wait during a read access waveforms

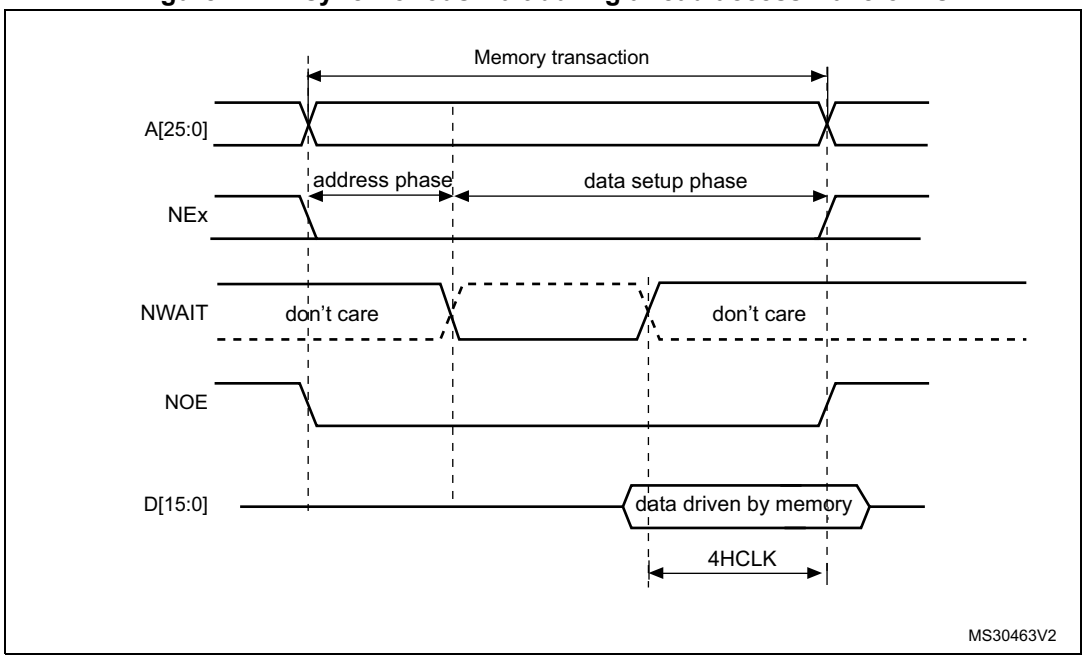

1. NWAIT polarity depends on WAITPOL bit setting in FMC_BCRx register.

Figure 472. Asynchronous wait during a write access waveforms

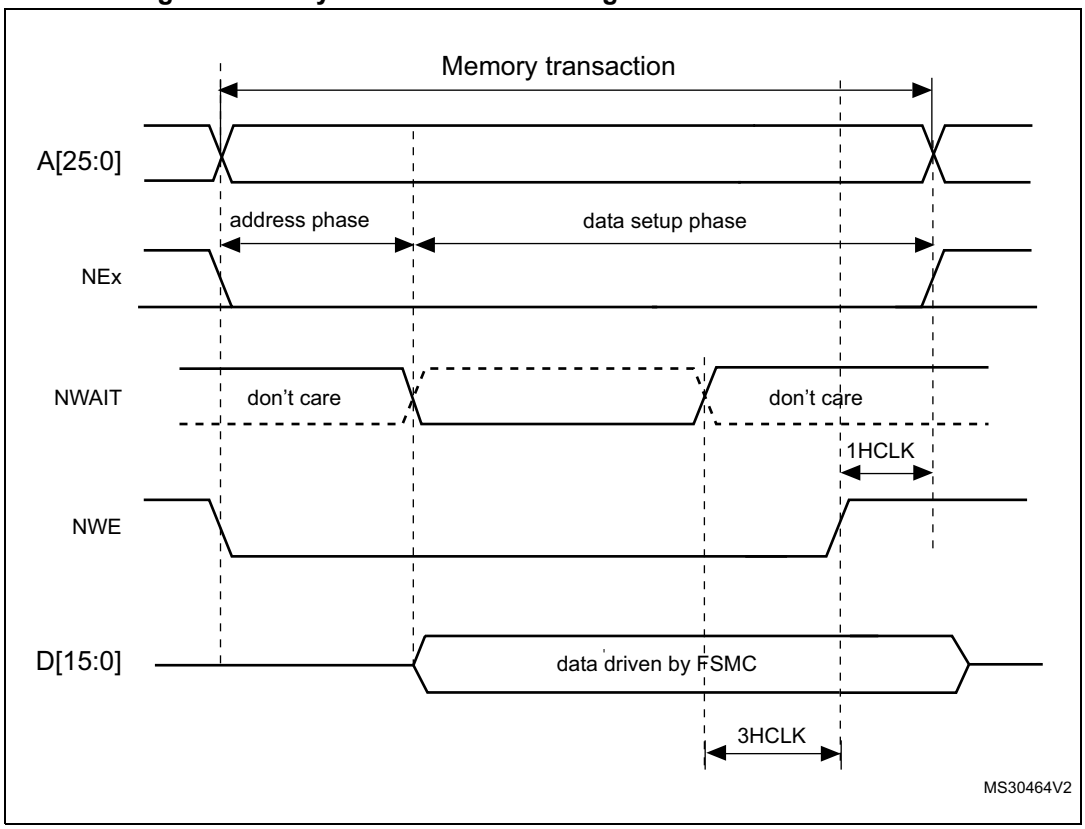

1. NWAIT polarity depends on WAITPOL bit setting in FMC_BCRx register.

37.5.5 Synchronous transactions

The memory clock, FMC_CLK, is a submultiple of HCLK. It depends on the value of CLKDIV and the MWID/ AHB data size, following the formula given below:

$$\text{FMC_CLK divider ratio} = \max(\text{CLKDIV} + 1, \text{MWID}(\text{AHB data size}))$$

If MWID is 16 or 8 bits, the FMC_CLK divider ratio is always defined by the programmed CLKDIV value.

If MWID is 32 bits, the FMC_CLK divider ratio depends also on AHB data size.

Example:

- If CLKDIV=1, MWID=32 bits, AHB data size=8 bits, FMC_CLK=HCLK/4.
- If CLKDIV=1, MWID=16 bits, AHB data size=8 bits, FMC_CLK=HCLK/2.

NOR Flash memories specify a minimum time from NADV assertion to CLK high. To meet this constraint, the FMC does not issue the clock to the memory during the first internal clock cycle of the synchronous access (before NADV assertion). This guarantees that the rising edge of the memory clock occurs in the middle of the NADV low pulse.

Data latency versus NOR memory latency

The data latency is the number of cycles to wait before sampling the data. The DATLAT value must be consistent with the latency value specified in the NOR Flash configuration

register. The FMC does not include the clock cycle when NADV is low in the data latency count.

Caution: Some NOR Flash memories include the NADV Low cycle in the data latency count, so that the exact relation between the NOR Flash latency and the FMC DATLAT parameter can be either:

- NOR Flash latency = (DATLAT + 2) CLK clock cycles
- or NOR Flash latency = (DATLAT + 3) CLK clock cycles

Some recent memories assert NWAIT during the latency phase. In such cases DATLAT can be set to its minimum value. As a result, the FMC samples the data and waits long enough to evaluate if the data are valid. Thus the FMC detects when the memory exits latency and real data are processed.

Other memories do not assert NWAIT during latency. In this case the latency must be set correctly for both the FMC and the memory, otherwise invalid data are mistaken for good data, or valid data are lost in the initial phase of the memory access.

Single-burst transfer

When the selected bank is configured in burst mode for synchronous accesses, if for example an AHB single-burst transaction is requested on 16-bit memories, the FMC performs a burst transaction of length 1 (if the AHB transfer is 16 bits), or length 2 (if the AHB transfer is 32 bits) and de-assert the Chip Select signal when the last data is strobed.

Such transfers are not the most efficient in terms of cycles compared to asynchronous read operations. Nevertheless, a random asynchronous access would first require to re-program the memory access mode, which would altogether last longer.

Cross boundary page for Cellular RAM 1.5

Cellular RAM 1.5 does not allow burst access to cross the page boundary. The FMC controller allows to split automatically the burst access when the memory page size is reached by configuring the CPSIZE bits in the FMC_BCR1 register following the memory page size.

Wait management

For synchronous NOR Flash memories, NWAIT is evaluated after the programmed latency period, which corresponds to (DATLAT+2) CLK clock cycles.

If NWAIT is active (low level when WAITPOL = 0, high level when WAITPOL = 1), wait states are inserted until NWAIT is inactive (high level when WAITPOL = 0, low level when WAITPOL = 1).

When NWAIT is inactive, the data is considered valid either immediately (bit WAITCFG = 1) or on the next clock edge (bit WAITCFG = 0).

During wait-state insertion via the NWAIT signal, the controller continues to send clock pulses to the memory, keeping the Chip Select and output enable signals valid. It does not consider the data as valid.

In burst mode, there are two timing configurations for the NOR Flash NWAIT signal:

- The Flash memory asserts the NWAIT signal one data cycle before the wait state (default after reset).
- The Flash memory asserts the NWAIT signal during the wait state

The FMC supports both NOR Flash wait state configurations, for each Chip Select, thanks to the WAITCFG bit in the FMC_BCRx registers (x = 0..3).

Figure 473. Wait configuration waveforms

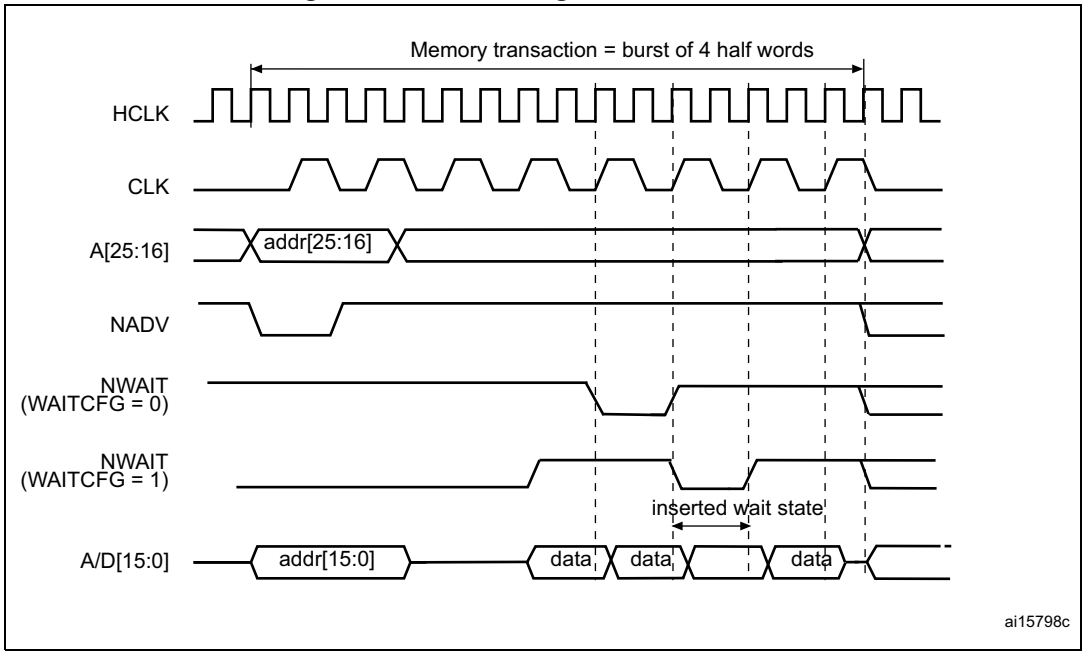

Figure 474. Synchronous multiplexed read mode waveforms - NOR, PSRAM (CRAM)

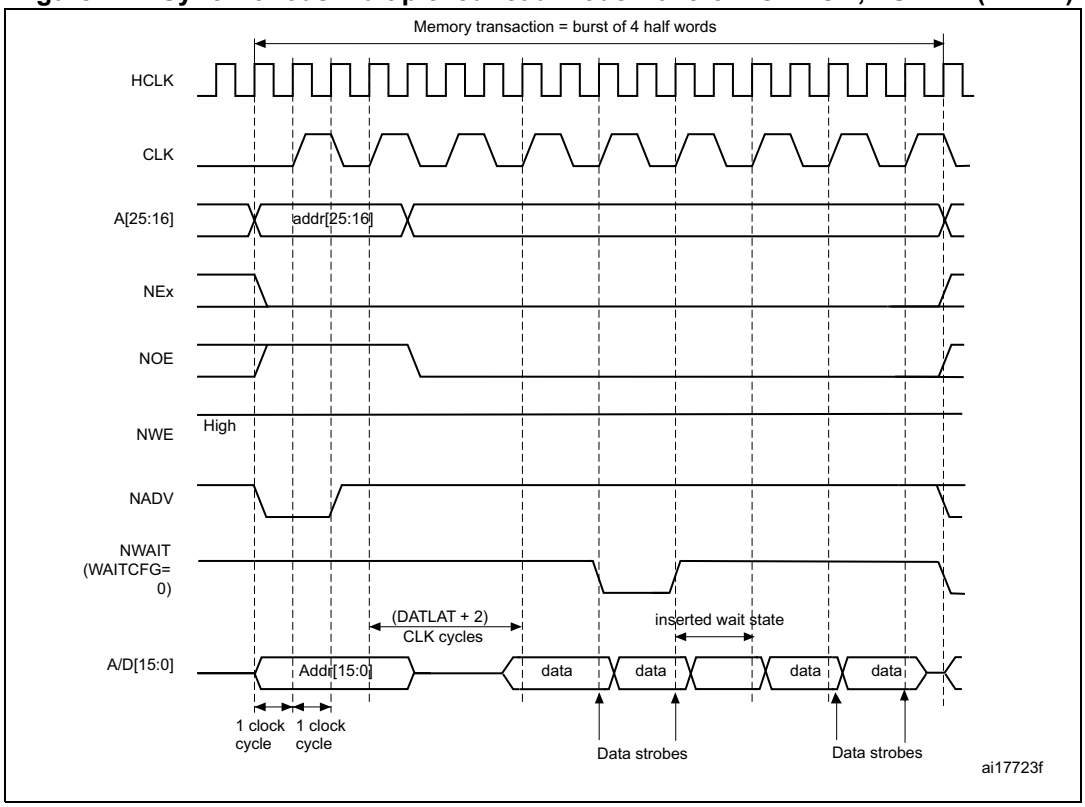

1. Byte lane outputs BL are not shown; for NOR access, they are held high, and, for PSRAM (CRAM) access,

they are held low.

Table 285. FMC_BCRx bit fields

Bit No.	Bit name	Value to set
31-21	Reserved	0x000
20	CCLKEN	As needed
19	CBURSTRW	No effect on synchronous read
18-16	CPSIZE	As needed (0x1 for CRAM 1.5)
15	ASYNCWAIT	0x0
14	EXTMOD	0x0
13	WAITEN	to be set to 1 if the memory supports this feature, to be kept at 0 otherwise
12	WREN	no effect on synchronous read
11	WAITCFG	to be set according to memory
10	WRAPMOD	0x0
9	WAITPOL	to be set according to memory
8	BURSTEN	0x1
7	Reserved	0x1
6	FACCEN	Set according to memory support (NOR Flash memory)
5-4	MWID	As needed
3-2	MTYP[1:0]	0x1 or 0x2
1	MUXEN	As needed
0	MBKEN	0x1

Table 286. FMC_BTRx bit fields

Bit No.	Bit name	Value to set
31:30	Reserved	0x0
29:28	ACCMOD	0x0
27-24	DATLAT	Data latency
27-24	DATLAT	Data latency
23-20	CLKDIV	0x0 to get CLK = HCLK (Not supported) 0x1 to get CLK = 2 × HCLK ..
19-16	BUSTURN	Time between NEx high to NEx low (BUSTURN HCLK)
15-8	DATAST	Don’t care
7-4	ADDHLD	Don’t care
3-0	ADDSET[3:0]	Don’t care

Figure 475. Synchronous multiplexed write mode waveforms - PSRAM (CRAM)

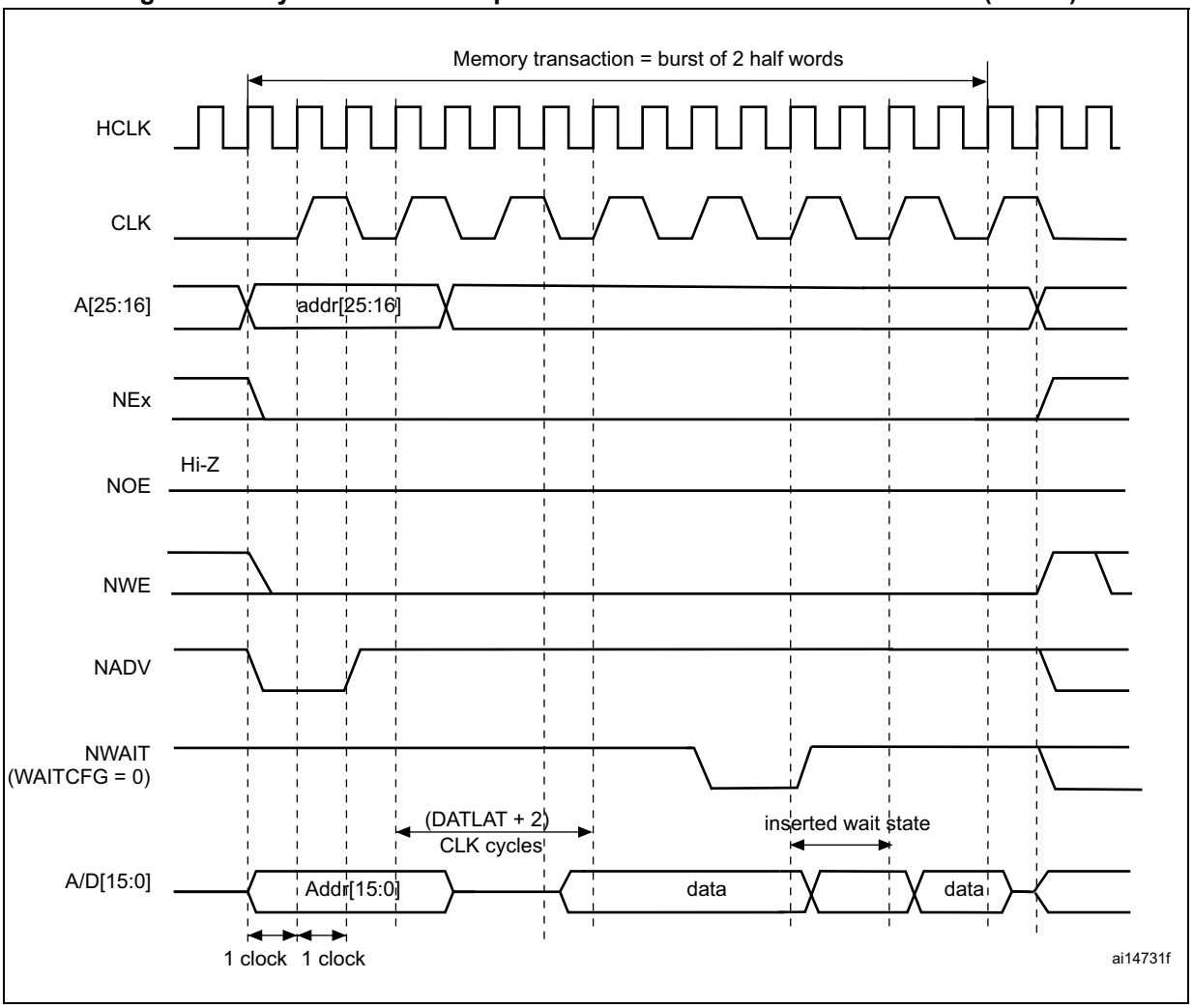

1. The memory must issue NWAIT signal one cycle in advance, accordingly WAITCFG must be programmed to 0.
2. Byte Lane (NBL) outputs are not shown, they are held low while NEx is active.

Table 287. FMC_BCRx bit fields

Bit No.	Bit name	Value to set
31-20	Reserved	0x000
20	CCLKEN	As needed
19	CBURSTRW	0x1
18-16	CPSIZE	As needed (0x1 for CRAM 1.5)
15	ASYNCWAIT	0x0
14	EXTMOD	0x0
13	WAITEN	to be set to 1 if the memory supports this feature, to be kept at 0 otherwise.
12	WREN	0x1

Table 287. FMC_BCRx bit fields (continued)

Bit No.	Bit name	Value to set
11	WAITCFG	0x0
10	WRAPMOD	0x0
9	WAITPOL	to be set according to memory
8	BURSTEN	no effect on synchronous write
7	Reserved	0x1
6	FACCEN	Set according to memory support
5-4	MWID	As needed
3-2	MTYP[1:0]	0x1
1	MUXEN	As needed
0	MBKEN	0x1

Table 288. FMC_BTRx bit fields

Bit No.	Bit name	Value to set
31-30	Reserved	0x0
29:28	ACCMOD	0x0
27-24	DATLAT	Data latency
23-20	CLKDIV	0x0 to get CLK = HCLK (not supported) 0x1 to get CLK = 2 × HCLK
19-16	BUSTURN	Time between NEx high to NEx low (BUSTURN HCLK)
15-8	DATAST	Don’t care
7-4	ADDHLD	Don’t care
3-0	ADDSET[3:0]	Don’t care

37.5.6 NOR/PSRAM controller registers

SRAM/NOR-Flash chip-select control registers 1..4 (FMC_BCR1..4)

Address offset: 8 * (x – 1), x = 1...4

Reset value: 0x0000 30DB for Bank1 and 0x0000 30D2 for Bank 2 to 4

This register contains the control information of each memory bank, used for SRAMs, PSRAM and NOR Flash memories.

31	30	29	28	27	26	25	24	23	22	21	20	19	18	17	16	15	14	13	12	11	10	9	8	7	6	5	4	3	2	1	0
Reserved											CCLKEN	CBURSTRW	CPSIZE[2:0]			ASCYCWAIT	EXTMOD	WAITEN	WREN	WAITCFG	WRAPMOD	WAITPOL	BURSTEN	Reserved	FACCEN	MWID[1:0]		MTYP[1:0]		MUXEN	MBKEN
											rw	rw				rw	rw	rw	rw	rw	rw	rw	rw		rw	rw	rw	rw	rw	rw	rw

Bits 31: 21 Reserved, must be kept at reset value

Bit 20 **CCLKEN:** Continuous Clock Enable.

This bit enables the FMC_CLK clock output to external memory devices.

0: The FMC_CLK is only generated during the synchronous memory access (read/write transaction). The FMC_CLK clock ratio is specified by the programmed CLKDIV value in the FMC_BCRx register (default after reset) .

1: The FMC_CLK is generated continuously during asynchronous and synchronous access. The FMC_CLK clock is activated when the CCLKEN is set.

Note: The CCLKEN bit of the FMC_BCR2..4 registers is don't care. It is only enabled through the FMC_BCR1 register. Bank 1 must be configured in synchronous mode to generate the FMC_CLK continuous clock.

Note: If CCLKEN bit is set, the FMC_CLK clock ratio is specified by CLKDIV value in the FMC_BTR1 register. CLKDIV in FMC_BWTR1 is don't care.

Note: If the synchronous mode is used and CCLKEN bit is set, the synchronous memories connected to other banks than Bank 1 are clocked by the same clock (the CLKDIV value in the FMC_BTR2..4 and FMC_BWTR2..4 registers for other banks has no effect.)

Bit 19 **CBURSTRW:** Write burst enable.

For PSRAM (CRAM) operating in burst mode, the bit enables synchronous accesses during write operations. The enable bit for synchronous read accesses is the BURSTEN bit in the FMC_BCRx register.

0: Write operations are always performed in asynchronous mode

1: Write operations are performed in synchronous mode.

Bits 18:16 **CPSIZE[2:0]**: CRAM page size.

These are used for Cellular RAM 1.5 which does not allow burst access to cross the address boundaries between pages. When these bits are configured, the FMC controller splits automatically the burst access when the memory page size is reached (refer to memory datasheet for page size).

000: No burst split when crossing page boundary (default after reset)

001: 128 bytes

010: 256 bytes

011: 512 bytes

100: 1024 bytes

Others: reserved

Bit 15 **ASYNCWAIT**: Wait signal during asynchronous transfers

This bit enables/disables the FMC to use the wait signal even during an asynchronous protocol.

0: NWAIT signal is not taken in to account when running an asynchronous protocol (default after reset)

1: NWAIT signal is taken in to account when running an asynchronous protocol

Bit 14 **EXTMOD:** Extended mode enable.

This bit enables the FMC to program the write timings for non-multiplexed asynchronous accesses inside the FMC_BWTR register, thus resulting in different timings for read and write operations.

0: values inside FMC_BWTR register are not taken into account (default after reset)

1: values inside FMC_BWTR register are taken into account

Note: When the extended mode is disabled, the FMC can operate in Mode1 or Mode2 as follows:

- *Mode 1 is the default mode when the SRAM/PSRAM memory type is selected (MTYP[1:0] =0x0 or 0x01)*
- *Mode 2 is the default mode when the NOR memory type is selected (MTYP[1:0] = 0x10).*

Bit 13 **WAITEN:** Wait enable bit.

This bit enables/disables wait-state insertion via the NWAIT signal when accessing the memory in synchronous mode.

0: NWAIT signal is disabled (its level not taken into account, no wait state inserted after the programmed Flash latency period)

1: NWAIT signal is enabled (its level is taken into account after the programmed latency period to insert wait states if asserted) (default after reset)

Bit 12 **WREN:** Write enable bit.

This bit indicates whether write operations are enabled/disabled in the bank by the FMC:

0: Write operations are disabled in the bank by the FMC, an AHB error is reported,

1: Write operations are enabled for the bank by the FMC (default after reset).

Bit 11 **WAITCFG:** Wait timing configuration.

The NWAIT signal indicates whether the data from the memory are valid or if a wait state must be inserted when accessing the memory in synchronous mode. This configuration bit determines if NWAIT is asserted by the memory one clock cycle before the wait state or during the wait state:

0: NWAIT signal is active one data cycle before wait state (default after reset),

1: NWAIT signal is active during wait state (not used for PSRAM).

Bit 10 **WRAPMOD:** Wrapped burst mode support.

Defines whether the controller will or not split an AHB burst wrap access into two linear accesses. Valid only when accessing memories in burst mode

0: Direct wrapped burst is not enabled (default after reset),

1: Direct wrapped burst is enabled.

Note: This bit has no effect as the CPU and DMA cannot generate wrapping burst transfers.

Bit 9 **WAITPOL:** Wait signal polarity bit.

Defines the polarity of the wait signal from memory used for either in synchronous or asynchronous mode:

0: NWAIT active low (default after reset),

1: NWAIT active high.

Bit 8 **BURSTEN:** Burst enable bit.

This bit enables/disables synchronous accesses during read operations. It is valid only for synchronous memories operating in burst mode:

0: Burst mode disabled (default after reset). Read accesses are performed in asynchronous mode.

1: Burst mode enable. Read accesses are performed in synchronous mode.

Bit 7 Reserved, must be kept at reset value

Bit 6 **FACCEN:** Flash access enable

Enables NOR Flash memory access operations.

0: Corresponding NOR Flash memory access is disabled

1: Corresponding NOR Flash memory access is enabled (default after reset)

Bits 5:4 **MWID[1:0]:** Memory data bus width.

Defines the external memory device width, valid for all type of memories.

00: 8 bits,

01: 16 bits (default after reset),

10: 32 bits,

11: reserved, do not use.

Bits 3:2 **MTYP[1:0]:** Memory type.

Defines the type of external memory attached to the corresponding memory bank:

00: SRAM (default after reset for Bank 2...4)

01: PSRAM (CRAM)

10: NOR Flash/OneNAND Flash (default after reset for Bank 1)

11: reserved

Bit 1 **MUXEN:** Address/data multiplexing enable bit.

When this bit is set, the address and data values are multiplexed on the data bus, valid only with NOR and PSRAM memories:

0: Address/Data nonmultiplexed

1: Address/Data multiplexed on databus (default after reset)

Bit 0 **MBKEN:** Memory bank enable bit.

Enables the memory bank. After reset Bank1 is enabled, all others are disabled. Accessing a disabled bank causes an ERROR on AHB bus.

0: Corresponding memory bank is disabled

1: Corresponding memory bank is enabled

SRAM/NOR-Flash chip-select timing registers 1..4 (FMC_BTR1..4)

Address offset: 0x04 + 8 * (x – 1), x = 1..4

Reset value: 0x0FFF FFFF

Reset value: 0x0FFF FFFF

FMC_BTRx bits are written by software to add a delay at the end of a read /write transaction. This delay allows matching the minimum time between consecutive transactions (t_{EHEL} from NEx high to FMC_NEx low) and the maximum time required by the memory to free the data bus after a read access (t_{EHQZ}).

This register contains the control information of each memory bank, used for SRAMs, PSRAM and NOR Flash memories.If the EXTMOD bit is set in the FMC_BCRx register, then this register is partitioned for write and read access, that is, 2 registers are available: one to configure read accesses (this register) and one to configure write accesses (FMC_BWTRx registers).

31	30	29	28	27	26	25	24	23	22	21	20	19	18	17	16	15	14	13	12	11	10	9	8	7	6	5	4	3	2	1	0
Reserved		ACCMOD[1:0]		DATLAT[3:0]				CLKDIV3:0]				BUSTURN3:0]				DATAST7:0]								ADDHLD3:0]				ADDSET[3:0]			
		rw	rw	rw	rw	rw	rw	rw	rw	rw	rw	rw	rw	rw	rw	rw	rw	rw	rw	rw	rw	rw	rw	rw	rw	rw	rw	rw	rw	rw	rw

Bits 31:30 Reserved, must be kept at reset value

Bits 29:28 **ACCMOD[1:0]:** Access mode

Specifies the asynchronous access modes as shown in the timing diagrams. These bits are taken into account only when the EXTMOD bit in the FMC_BCRx register is 1.

00: access mode A
01: access mode B
10: access mode C
11: access mode D

Bits 27:24 **DATLAT[3:0]:** Data latency for synchronous memory (see note below bit description table)

For synchronous accesses with read/write burst mode enabled (BURSTEN / CBURSTRW bits set), this field defines the number of memory clock cycles (+2) to issue to the memory before reading/writing the first data. This timing parameter is not expressed in HCLK periods, but in FMC_CLK periods. For asynchronous accesses, this value is don't care.

0000: Data latency of 2 CLK clock cycles for first burst access
1111: Data latency of 17 CLK clock cycles for first burst access (default value after reset)

Bits 23:20 **CLKDIV[3:0]:** Clock divide ratio (for FMC_CLK signal)

Defines the period of FMC_CLK clock output signal, expressed in number of HCLK cycles:

0000: Reserved
0001: FMC_CLK period = 2 × HCLK periods
0010: FMC_CLK period = 3 × HCLK periods
1111: FMC_CLK period = 16 × HCLK periods (default value after reset)
In asynchronous NOR Flash, SRAM or PSRAM accesses, this value is don’t care.

Note: Refer to section 37.5.5: Synchronous transactions for FMC_CLK divider ratio formula)

Bits 19:16 **BUSTURN[3:0]:** Bus turnaround phase duration

These bits are written by software to add a delay at the end of a write-to-read (and read-to-write) transaction. This delay allows to match the minimum time between consecutive transactions (t_{EHEL} from NEx high to NEx low) and the maximum time needed by the memory to free the data bus after a read access (t_{EHQZ}). The programmed bus turnaround delay is inserted between an asynchronous read (muxed or mode D) or write transaction and any other asynchronous /synchronous read or write to or from a static bank. The bank can be the same or different in case of read, in case of write the bank can be different except for muxed or mode D.

In some cases, whatever the programmed BUSTRUN values, the bus turnaround delay is fixed as follows:

- The bus turnaround delay is not inserted between two consecutive asynchronous write transfers to the same static memory bank except for modes muxed and D.
- There is a bus turnaround delay of 1 FMC clock cycle between:
  - –Two consecutive asynchronous read transfers to the same static memory bank except for modes muxed and D.
  - –An asynchronous read to an asynchronous or synchronous write to any static bank or dynamic bank except for modes muxed and D.
  - –An asynchronous (modes 1, 2, A, B or C) read and a read from another static bank.
- There is a bus turnaround delay of 2 FMC clock cycle between:
  - –Two consecutive synchronous writes (burst or single) to the same bank.
  - –A synchronous write (burst or single) access and an asynchronous write or read transfer to or from static memory bank (the bank can be the same or different for the case of read.
  - –Two consecutive synchronous reads (burst or single) followed by any synchronous/asynchronous read or write from/to another static memory bank.
- There is a bus turnaround delay of 3 FMC clock cycle between:
  - –Two consecutive synchronous writes (burst or single) to different static bank.
  - –A synchronous write (burst or single) access and a synchronous read from the same or a different bank.

0000: BUSTURN phase duration = 0 HCLK clock cycle added

...

1111: BUSTURN phase duration = 15 x HCLK clock cycles added (default value after reset)

Bits 15:8 **DATAST[7:0]:** Data-phase duration

These bits are written by software to define the duration of the data phase (refer to *Figure 458* to *Figure 470*), used in asynchronous accesses:

0000 0000: Reserved
0000 0001: DATAST phase duration = 1 × HCLK clock cycles
0000 0010: DATAST phase duration = 2 × HCLK clock cycles
...
1111 1111: DATAST phase duration = 255 × HCLK clock cycles (default value after reset)

For each memory type and access mode data-phase duration, please refer to the respective figure (*Figure 458* to *Figure 470*).

Example: Mode1, write access, DATAST=1: Data-phase duration= DATAST+1 = 2 HCLK clock cycles.

Note: In synchronous accesses, this value is don't care.

Bits 7:4 **ADDHLD[3:0]:** Address-hold phase duration

These bits are written by software to define the duration of the *address hold* phase (refer to *Figure 467* to *Figure 470*), used in mode D or multiplexed accesses:

0000: Reserved
0001: ADDHLD phase duration =1 × HCLK clock cycle
0010: ADDHLD phase duration = 2 × HCLK clock cycle
...
1111: ADDHLD phase duration = 15 × HCLK clock cycles (default value after reset)

For each access mode address-hold phase duration, please refer to the respective figure (*Figure 467* to *Figure 470*).

Note: In synchronous accesses, this value is not used, the address hold phase is always 1 memory clock period duration.

Bits 3:0 **ADDSET[3:0]:** Address setup phase duration

These bits are written by software to define the duration of the *address setup* phase (refer to *Figure 458* to *Figure 470*), used in SRAMs, ROMs and asynchronous NOR Flash and PSRAM accesses:

0000: ADDSET phase duration = 0 × HCLK clock cycle
...
1111: ADDSET phase duration = 15 × HCLK clock cycles (default value after reset)

For each access mode address setup phase duration, please refer to the respective figure (refer to *Figure 458* to *Figure 470*).

Note: In synchronous accesses, this value is don't care.
In Muxed mode or Mode D, the minimum value for ADDSET is 1.

Note: PSRAMs (CRAMs) have a variable latency due to internal refresh. Therefore these memories issue the NWAIT signal during the whole latency phase to prolong the latency as needed.
With PSRAMs (CRAMs) the filled DATLAT must be set to 0, so that the FMC exits its latency phase soon and starts sampling NWAIT from memory, then starts to read or write when the memory is ready.
This method can be used also with the latest generation of synchronous Flash memories that issue the NWAIT signal, unlike older Flash memories (check the datasheet of the specific Flash memory being used).

SRAM/NOR-Flash write timing registers 1..4 (FMC_BWTR1..4)

Address offset: 0x104 + 8 * (x – 1), x = 1...4

Reset value: 0x0FFF FFFF

This register contains the control information of each memory bank. It is used for SRAMs, PSRAMs and NOR Flash memories. When the EXTMOD bit is set in the FMC_BCRx register, then this register is active for write access.

31	30	29	28	27	26	25	24	23	22	21	20	19	18	17	16	15	14	13	12	11	10	9	8	7	6	5	4	3	2	1	0
Reserved		ACCMOD[1:0]		Reserved								BUSTURN[3:0]				DATAST[7:0]								ADDHLD[3:0]				ADDSET[3:0]			
		rw	rw									rw	rw	rw	rw	rw	rw	rw	rw	rw	rw	rw	rw	rw	rw	rw	rw	rw	rw	rw	rw

Bits 31:30 Reserved, must be kept at reset value

Bits 29:28 **ACCMOD[1:0]:** Access mode.

Specifies the asynchronous access modes as shown in the next timing diagrams.These bits are taken into account only when the EXTMOD bit in the FMC_BCRx register is 1.

00: access mode A
01: access mode B
10: access mode C
11: access mode D

Bits 27:20 Reserved, must be kept at reset value

Bits 19:16 **BUSTURN[3:0]**: Bus turnaround phase duration

The programmed bus turnaround delay is inserted between an asynchronous write transfer and any other asynchronous /synchronous read or write transfer to or from a static bank. The bank can be the same or different in case of read, in case of write the bank can be different expect for muxed or mode D.

In some cases, whatever the programmed BUSTRUN values, the bus turnaround delay is fixed as follows:

- The bus turnaround delay is not inserted between two consecutive asynchronous write transfers to the same static memory bank except for modes muxed and D.
- There is a bus turnaround delay of 2 FMC clock cycle between:
  - –Two consecutive synchronous writes (burst or single) to the same bank.
  - –A synchronous write (burst or single) transfer and an asynchronous write or read transfer to or from static memory bank.
- There is a bus turnaround delay of 3 FMC clock cycle between:
  - –Two consecutive synchronous writes (burst or single) to different static bank.
  - –A synchronous write (burst or single) transfer and a synchronous read from the same or a different bank.

0000: BUSTURN phase duration = 0 HCLK clock cycle added
...
1111: BUSTURN phase duration = 15 HCLK clock cycles added (default value after reset)

Bits 15:8 **DATAST[3:0]:** Data-phase duration.

These bits are written by software to define the duration of the data phase (refer to*Figure 458* to *Figure 470*), used in asynchronous SRAM, PSRAM and NOR Flash memory accesses:

0000 0000: Reserved
0000 0001: DATAST phase duration = 1 × HCLK clock cycles
0000 0010: DATAST phase duration = 2 × HCLK clock cycles
...
1111 1111: DATAST phase duration = 255 × HCLK clock cycles (default value after reset)

Bits 7:4 **ADDHLD[3:0]:** Address-hold phase duration.

These bits are written by software to define the duration of the *address hold* phase (refer to *Figure 467* to *Figure 470*), used in asynchronous multiplexed accesses:

0000: Reserved
0001: ADDHLD phase duration = 1 × HCLK clock cycle
0010: ADDHLD phase duration = 2 × HCLK clock cycle
...
1111: ADDHLD phase duration = 15 × HCLK clock cycles (default value after reset)

Note: In synchronous NOR Flash accesses, this value is not used, the address hold phase is always 1 Flash clock period duration.

Bits 3:0 **ADDSET[3:0]:** Address setup phase duration.

These bits are written by software to define the duration of the *address setup* phase in HCLK cycles (refer to *Figure 467* to *Figure 470*), used in asynchronous accesses:

0000: ADDSET phase duration = 0 × HCLK clock cycle
...
1111: ADDSET phase duration = 15 × HCLK clock cycles (default value after reset)

Note: In synchronous NOR Flash and PSRAM accesses, this value is not used, the address setup phase is always 1 Flash clock period duration. In muxed mode, the minimum ADDSET value is 1.

37.6 NAND Flash/PC Card controller

The FMC generates the appropriate signal timings to drive the following types of device:

- 8- and 16-bit NAND Flash memories
- 16-bit PC Card compatible devices

The NAND Flash/PC Card controller can control three external banks, Bank 2, 3 and 4:

- Bank 2 and Bank 3 support NAND Flash devices
- Bank 4 supports PC Card devices.

Each bank is configured through dedicated registers (*Section 37.6.8*). The programmable memory parameters include access timings (shown in *Table 289*) and ECC configuration.

Table 289. Programmable NAND Flash/PC Card access parameters

Parameter	Function	Access mode	Unit	Min.	Max.
Memory setup time	Number of clock cycles (HCLK) required to set up the address before the command assertion	Read/Write	AHB clock cycle (HCLK)	1	256
Memory wait	Minimum duration (in HCLK clock cycles) of the command assertion	Read/Write	AHB clock cycle (HCLK)	2	255
Memory hold	Number of clock cycles (HCLK) during which the address must be held (as well as the data if a write access is performed) after the command de-assertion	Read/Write	AHB clock cycle (HCLK)	1	254
Memory databus high-Z	Number of clock cycles (HCLK) during which the data bus is kept in high-Z state after a write access has started	Write	AHB clock cycle (HCLK)	1	255

37.6.1 External memory interface signals

The following tables list the signals that are typically used to interface NAND Flash memory and PC Card.

Note: The prefix "N" identifies the signals which are active low.

8-bit NAND Flash memory

Table 290. 8-bit NAND Flash

FMC signal name	I/O	Function
A[17]	O	NAND Flash address latch enable (ALE) signal
A[16]	O	NAND Flash command latch enable (CLE) signal
D[7:0]	I/O	8-bit multiplexed, bidirectional address/data bus
NCE[x]	O	Chip Select, x = 2, 3
NOE(= NRE)	O	Output enable (memory signal name: read enable, NRE)
NWE	O	Write enable
NWAIT/INT[3:2]	I	NAND Flash ready/busy input signal to the FMC

Theoretically, there is no capacity limitation as the FMC can manage as many address cycles as needed.

16-bit NAND Flash memory

Table 291. 16-bit NAND Flash

FMC signal name	I/O	Function
A[17]	O	NAND Flash address latch enable (ALE) signal
A[16]	O	NAND Flash command latch enable (CLE) signal
D[15:0]	I/O	16-bit multiplexed, bidirectional address/data bus
NCE[x]	O	Chip Select, x = 2, 3
NOE(= NRE)	O	Output enable (memory signal name: read enable, NRE)
NWE	O	Write enable
NWAIT/INT[3:2]	I	NAND Flash ready/busy input signal to the FMC

Theoretically, there is no capacity limitation as the FMC can manage as many address cycles as needed.

Table 292. 16-bit PC Card

FMC signal name	I/O	Function
A[10:0]	O	Address bus
NIORD	O	Output enable for I/O space
NIOWR	O	Write enable for I/O space
NREG	O	Register signal indicating if access is in Common or Attribute space
D[15:0]	I/O	Bidirectional databus
NCE4_1	O	Chip Select 1
NCE4_2	O	Chip Select 2 (indicates if access is 16-bit or 8-bit)
NOE	O	Output enable in Common and in Attribute space
NWE	O	Write enable in Common and in Attribute space
NWAIT	I	PC Card wait input signal to the FMC (memory signal name IORDY)
INTR	I	PC Card interrupt to the FMC (only for PC Cards that can generate an interrupt)
CD	I	PC Card presence detection. Active high. If an access is performed to the PC Card banks while CD is low, an AHB error is generated. Refer to *Section 37.3: AHB interface*

37.6.2 NAND Flash / PC Card supported memories and transactions

Table 293 shows the supported devices, access modes and transactions. Transactions not allowed (or not supported) by the NAND Flash / PC Card controller are shown in gray.

Table 293. Supported memories and transactions

Device	Mode	R/W	AHB data size	Memory data size	Allowed/ not allowed	Comments
NAND 8-bit	Asynchronous	R	8	8	Y	-
	Asynchronous	W	8	8	Y	-
	Asynchronous	R	16	8	Y	Split into 2 FMC accesses
	Asynchronous	W	16	8	Y	Split into 2 FMC accesses
	Asynchronous	R	32	8	Y	Split into 4 FMC accesses
	Asynchronous	W	32	8	Y	Split into 4 FMC accesses
NAND 16-bit	Asynchronous	R	8	16	Y	-
	Asynchronous	W	8	16	N	-
	Asynchronous	R	16	16	Y	-
	Asynchronous	W	16	16	Y	-
	Asynchronous	R	32	16	Y	Split into 2 FMC accesses
	Asynchronous	W	32	16	Y	Split into 2 FMC accesses

37.6.3 Timing diagrams for NAND Flash memory and PC Card

Each PC Card/CompactFlash and NAND Flash memory bank is managed through a set of registers:

- Control register: FMC_PCRx
- Interrupt status register: FMC_SRx
- ECC register: FMC_ECCRx
- Timing register for Common memory space: FMC_PMEMx
- Timing register for Attribute memory space: FMC_PATTx
- Timing register for I/O space: FMC_PIOx

Each timing configuration register contains three parameters used to define number of HCLK cycles for the three phases of any PC Card/CompactFlash or NAND Flash access, plus one parameter that defines the timing for starting driving the data bus when a write access is performed. *Figure 476* shows the timing parameter definitions for common memory accesses, knowing that Attribute and I/O (only for PC Card) memory space access timings are similar.

Figure 476. NAND Flash/PC Card controller waveforms for common memory access

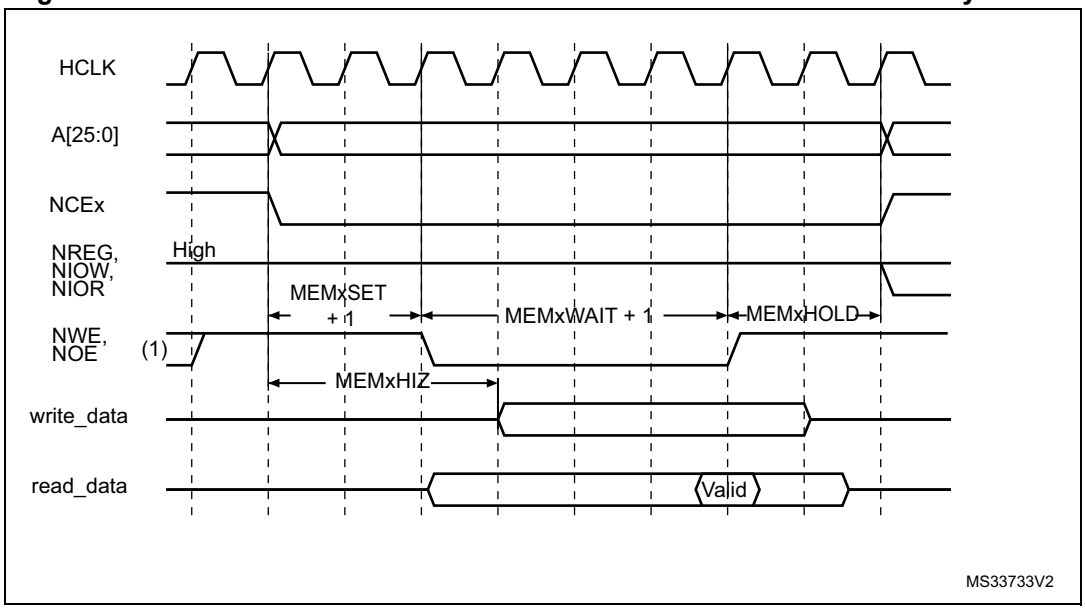

1. NOE remains high (inactive) during write accesses. NWE remains high (inactive) during read accesses.
2. For write accesses, the hold phase delay is (MEMHOLD) x HCLK cycles, while it is (MEMHOLD + 2) x HCLK cycles for read accesses.

37.6.4 NAND Flash operations

The command latch enable (CLE) and address latch enable (ALE) signals of the NAND Flash memory device are driven by address signals from the FMC controller. This means that to send a command or an address to the NAND Flash memory, the CPU has to perform a write to a specific address in its memory space.

A typical page read operation from the NAND Flash device requires the following steps:

3. Program and enable the corresponding memory bank by configuring the FMC_PCRx and FMC_PMEMx (and for some devices, FMC_PATTx, see *Section 37.6.5: NAND Flash prewait functionality*) registers according to the characteristics of the NAND Flash memory (PWID bits for the data bus width of the NAND Flash, PTYP = 1, PWAITEN = 0 or 1 as needed, see section *Section 37.4.2: NAND Flash memory/PC Card address mapping* for timing configuration).
4. The CPU performs a byte write to the common memory space, with data byte equal to one Flash command byte (for example 0x00 for Samsung NAND Flash devices). The LE input of the NAND Flash memory is active during the write strobe (low pulse on NWE), thus the written byte is interpreted as a command by the NAND Flash memory. Once the command is latched by the memory device, it does not need to be written again for the following page read operations.
5. The CPU can send the start address (STARTAD) for a read operation by writing four byte (or three for smaller capacity devices), STARTAD[7:0], STARTAD[16:9], STARTAD[24:17] and finally STARTAD[25] (for 64 Mb x 8 bit NAND Flash memories) in the common memory or attribute space. The ALE input of the NAND Flash device is active during the write strobe (low pulse on NWE), thus the written byte are interpreted as the start address for read operations. Using the attribute memory space makes it possible to use a different timing configuration of the FMC, which can be used to

implement the prewait functionality needed by some NAND Flash memories (see details in *Section 37.6.5: NAND Flash prewait functionality*).

6. The controller waits for the NAND Flash memory to be ready (R/NB signal high), before starting a new access to the same or another memory bank. While waiting, the controller holds the NCE signal active (low).
7. The CPU can then perform byte read operations from the common memory space to read the NAND Flash page (data field + Spare field) byte by byte.
8. The next NAND Flash page can be read without any CPU command or address write operation. This can be done in three different ways:
   – by simply performing the operation described in step 5
   – a new random address can be accessed by restarting the operation at step 3
   – a new command can be sent to the NAND Flash device by restarting at step 2

37.6.5 NAND Flash prewait functionality

Some NAND Flash devices require that, after writing the last part of the address, the controller waits for the R/NB signal to go low. (see *Figure 457*).

Figure 477. Access to non 'CE don't care' NAND-Flash

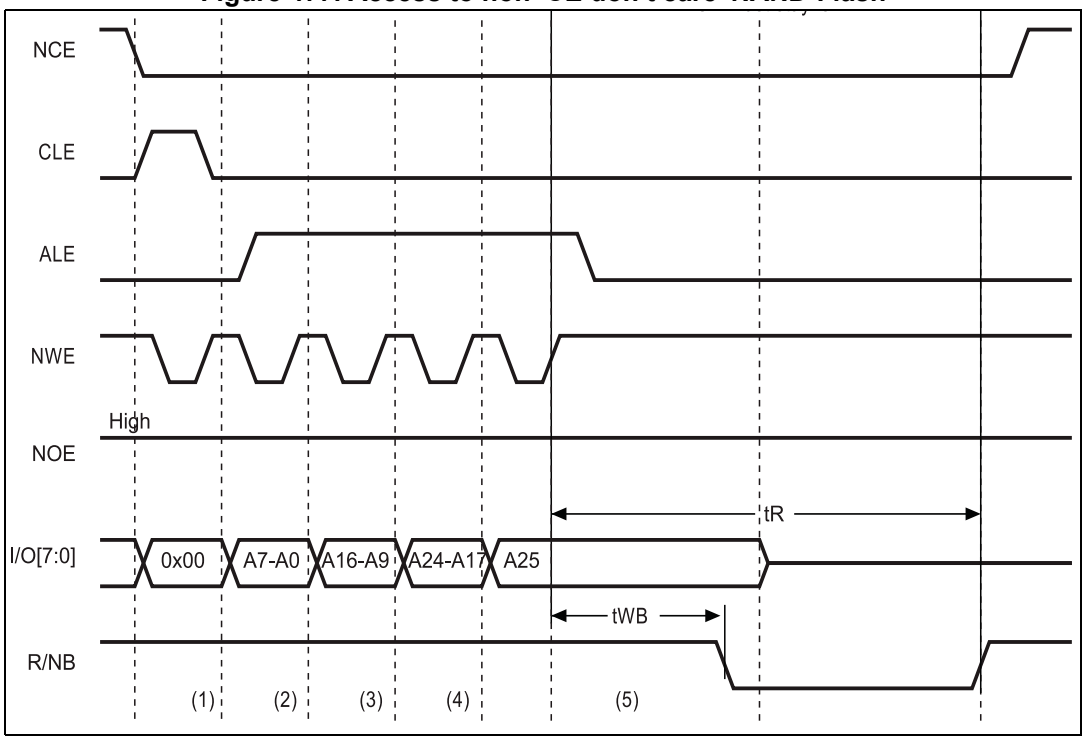

1. CPU wrote byte 0x00 at address 0x7001 0000.
2. CPU wrote byte A7~A0 at address 0x7002 0000.
3. CPU wrote byte A16~A9 at address 0x7002 0000.
4. CPU wrote byte A24~A17 at address 0x7002 0000.
5. CPU wrote byte A25 at address 0x7802 0000: FMC performs a write access using FMC_PATT2 timing definition, where ATTHOLD ≥ 7 (providing that (7+1) × HCLK = 112 ns > t_{WB} max). This guarantees that NCE remains low until R/NB goes low and high again (only requested for NAND Flash memories where NCE is not don't care).

When this functionality is required, it can be ensured by programming the MEMHOLD value to meet the t_{WB} timing. However CPU read accesses to the NAND Flash memory has a hold delay of (MEMHOLD + 2) x HCLK cycles, while CPU write accesses have a hold delay of (MEMHOLD) x HCLK cycles.

To cope with this timing constraint, the attribute memory space can be used by programming its timing register with an ATTHOLD value that meets the t_{WB} timing, and by keeping the MEMHOLD value at its minimum value. The CPU must then use the common memory space for all NAND Flash read and write accesses, except when writing the last address byte to the NAND Flash device, where the CPU must write to the attribute memory space.

37.6.6 Computation of the error correction code (ECC) in NAND Flash memory

The FMC PC Card controller includes two error correction code computation hardware blocks, one per memory bank. They reduce the host CPU workload when processing the ECC by software.

These two ECC blocks are identical and associated with Bank 2 and Bank 3. As a consequence, no hardware ECC computation is available for memories connected to Bank 4.

The ECC algorithm implemented in the FMC can perform 1-bit error correction and 2-bit error detection per 256, 512, 1 024, 2 048, 4 096 or 8 192 byte read or written from/to the NAND Flash memory. It is based on the Hamming coding algorithm and consists in calculating the row and column parity.

The ECC modules monitor the NAND Flash data bus and read/write signals (NCE and NWE) each time the NAND Flash memory bank is active.

The ECC operates as follows:

- When accessing NAND Flash memory bank 2 or bank 3, the data present on the D[15:0] bus is latched and used for ECC computation.
- When accessing any other address in NAND Flash memory, the ECC logic is idle, and does not perform any operation. As a result, write operations to define commands or addresses to the NAND Flash memory are not taken into account for ECC computation.

Once the desired number of byte has been read/written from/to the NAND Flash memory by the host CPU, the FMC_ECCR2/3 registers must be read to retrieve the computed value. Once read, they should be cleared by resetting the ECCEN bit to ‘0’. To compute a new data block, the ECCEN bit must be set to one in the FMC_PCR2/3 registers.

To perform an ECC computation:

1. Enable the ECCEN bit in the FMC_PCR2/3 register.
2. Write data to the NAND Flash memory page. While the NAND page is written, the ECC block computes the ECC value.
3. Read the ECC value available in the FMC_ECCR2/3 register and store it in a variable.
4. Clear the ECCEN bit and then enable it in the FMC_PCR2/3 register before reading back the written data from the NAND page. While the NAND page is read, the ECC block computes the ECC value.
5. Read the new ECC value available in the FMC_ECCR2/3 register.
6. If the two ECC values are the same, no correction is required, otherwise there is an ECC error and the software correction routine returns information on whether the error can be corrected or not.

37.6.7 PC Card/CompactFlash operations

Address spaces and memory accesses

The FMC supports CompactFlash devices and PC Cards in Memory mode and I/O mode (True IDE mode is not supported).

The CompactFlash and PC Cards are made of 3 memory spaces:

- Common Memory space
- Attribute space
- I/O Memory space

The nCE2 and nCE1 pins (FMC_NCE4_2 and FMC_NCE4_1 respectively) select the card and indicate whether a byte or a word operation is being performed: nCE2 accesses the odd byte on D15-8 and nCE1 accesses the even byte on D7-0 if A0=0 or the odd byte on D7-0 if A0=1. The full word is accessed on D15-0 if both nCE2 and nCE1 are low.

The memory space is selected by asserting low nOE for read accesses or nWE for write accesses, combined with the low assertion of nCE2/nCE1 and nREG.

- If pin nREG=1 during the memory access, the common memory space is selected
- If pin nREG=0 during the memory access, the attribute memory space is selected

The I/O space is selected by asserting nIORD space for read accesses or nIOWR for write accesses [instead of nOE/nWE for memory space], combined with nCE2/nCE1. Note that nREG must also be asserted low when accessing I/O space.

Three type of accesses are allowed for a 16-bit PC Card:

- Accesses to Common Memory space for data storage can be either 8-bit accesses at even addresses or 16-bit AHB accesses.

  Note that 8-bit accesses at odd addresses are not supported and nCE2 will not be driven low. A 32-bit AHB request is translated into two 16-bit memory accesses.
- Accesses to Attribute Memory space where the PC Card stores configuration information are limited to 8-bit AHB accesses at even addresses.

  Note that a 16-bit AHB access will be converted into a single 8-bit memory transfer: nCE1 will be asserted low, nCE2 will be asserted high and only the even byte on D7-D0 will be valid. Instead a 32-bit AHB access will be converted into two 8-bit memory

transfers at even addresses: nCE1 will be asserted low, NCE2 will be asserted high and only the even byte will be valid.

- Accesses to I/O space can be either 8-bit or 16 bit AHB accesses.

Table 294. 16-bit PC-Card signals and access type

nCE2	nCE1	nREG	nOE/nWE	nIORD	A10	A9	A7-1	A0	Space	Access type	Allowed/not Allowed
1	0	1	0	1	X	X	X-X	X	Common Memory Space	Read/Write byte on D7-D0	YES
0	1	1	0	1	X	X	X-X	X		Read/Write byte on D15-D8	Not supported
0	0	1	0	1	X	X	X-X	0		Read/Write word on D15-D0	YES
X	0	0	0	1	0	1	X-X	0	Attribute Space	Read or Write Configuration Registers	YES
X	0	0	0	1	0	0	X-X	0		Read or Write CIS (Card Information Structure)	YES
1	0	0	0	1	X	X	X-X	1	Attribute Space	Invalid Read or Write (odd address)	YES
0	1	0	0	1	X	X	X-X	x		Invalid Read or Write (odd address)	YES
1	0	0	1	0	X	X	X-X	0	I/O space	Read Even Byte on D7-0	YES
1	0	0	1	0	X	X	X-X	1		Read Odd Byte on D7-0	YES
1	0	0	1	0	X	X	X-X	0		Write Even Byte on D7-0	YES
1	0	0	1	0	X	X	X-X	1		Write Odd Byte on D7-0	YES
0	0	0	1	0	X	X	X-X	0		Read Word on D15-0	YES
0	0	0	1	0	X	X	X-X	0		Write word on D15-0	YES
0	1	0	1	0	X	X	X-X	X		Read Odd Byte on D15-8	Not supported
0	1	0	1	0	X	X	X-X	X		Write Odd Byte on D15-8	Not supported

FMC Bank 4 gives access to those 3 memory spaces as described in *Section 37.4.2: NAND Flash memory/PC Card address mapping* and *Table 256: NAND/PC Card memory mapping and timing registers*.

Wait feature

The CompactFlash or PC Card may request the FMC to extend the length of the access phase programmed by MEMWAITx/ATTWAITx/IOWAITx bits, asserting the nWAIT signal after nOE/nWE or nIORD/nIOWR activation if the wait feature is enabled through the PWAITEN bit in the FMC_PCRx register. To detect correctly the nWAIT assertion, the MEMWAITx/ATTWAITx/IOWAITx bits must be programmed as follows:

$$\text{xxWAITx} \geq 4 + \frac{\text{max_wait_assertion_time}}{\text{HCLK}}$$

where max_wait_assertion_time is the maximum time taken by NWAIT to go low once nOE/nWE or nIORD/nIOWR is low.

After WAIT de-assertion, the FMC extends the WAIT phase for 4 HCLK clock cycles.

37.6.8 NAND Flash/PC Card controller registers

PC Card/NAND Flash control registers 2..4 (FMC_PCR2..4)

Address offset: 0x40 + 0x20 * (x – 1), x = 2..4

Reset value: 0x0000 0018

31	30	29	28	27	26	25	24	23	22	21	20	19	18	17	16	15	14	13	12	11	10	9	8	7	6	5	4	3	2	1	0
Reserved												ECCPS[2:0]			TAR[3:0]				TCLR[3:0]				Reserved		ECCEN	PWID[1:0]		PTYP	PBKEN	PWAITEN	Reserved
												rw	rw	rw	rw	rw	rw	rw	rw	rw	rw	rw			rw	rw	rw	rw	rw	rw	

Bits 31:20 Reserved, must be kept at reset value

Bits 19:17 **ECCPS[2:0]:** ECC page size.
Defines the page size for the extended ECC:
000: 256 byte
001: 512 byte
010: 1024 byte
011: 2048 byte
100: 4096 byte
101: 8192 byte

Bits 16:13 **TAR[3:0]:** ALE to RE delay.
Sets time from ALE low to RE low in number of AHB clock cycles (HCLK).
Time is: t_ar = (TAR + SET + 2) × THCLK where THCLK is the HCLK clock period
0000: 1 HCLK cycle (default)
1111: 16 HCLK cycles
Note: SET is MEMSET or ATTSET according to the addressed space.

Bits 12:9 **TCLR[3:0]:** CLE to RE delay.
Sets time from CLE low to RE low in number of AHB clock cycles (HCLK).
Time is t_clr = (TCLR + SET + 2) × THCLK where THCLK is the HCLK clock period
0000: 1 HCLK cycle (default)
1111: 16 HCLK cycles
Note: SET is MEMSET or ATTSET according to the addressed space.

Bits 8:7 Reserved, must be kept at reset value

Bit 6 **ECCEN:** ECC computation logic enable bit
0: ECC logic is disabled and reset (default after reset),
1: ECC logic is enabled.

Bits 5:4 **PWID[1:0]:** Data bus width.
Defines the external memory device width.
00: 8 bits
01: 16 bits (default after reset). This value is mandatory for PC Cards.
10: reserved, do not use
11: reserved, do not use

Bit 3 **PTYP:** Memory type.

Defines the type of device attached to the corresponding memory bank:

0: PC Card, CompactFlash, CF+ or PCMCIA

1: NAND Flash (default after reset)

Bit 2 **PBKEN:** PC Card/NAND Flash memory bank enable bit.

Enables the memory bank. Accessing a disabled memory bank causes an ERROR on AHB bus

0: Corresponding memory bank is disabled (default after reset)

1: Corresponding memory bank is enabled

Bit 1 **PWAITEN:** Wait feature enable bit.

Enables the Wait feature for the PC Card/NAND Flash memory bank:

0: disabled

1: enabled

Note: For a PC Card, when the wait feature is enabled, the MEMWAITx/ATTWAITx/IOWAITx bits must be programmed to a value as follows:

xxWAITx ≥ 4 + max_wait_assertion_time/HCLK

Where max_wait_assertion_time is the maximum time taken by NWAIT to go low once nOE/nWE or nIORD/nIOWR is low.

Bit 0 Reserved.

FIFO status and interrupt register 2..4 (FMC_SR2..4)

Address offset: 0x44 + 0x20 * (x-1), x = 2..4

Reset value: 0x0000 0040

This register contains information about the FIFO status and interrupt. The FMC features a FIFO that is used when writing to memories to transfer up to 16 words of data from the AHB.

This is used to quickly write to the FIFO and free the AHB for transactions to peripherals other than the FMC, while the FMC is draining its FIFO into the memory. One of these register bits indicates the status of the FIFO, for ECC purposes.

The ECC is calculated while the data are written to the memory. To read the correct ECC, the software must consequently wait until the FIFO is empty.

31	30	29	28	27	26	25	24	23	22	21	20	19	18	17	16	15	14	13	12	11	10	9	8	7	6	5	4	3	2	1	0
Reserved																									FEMPT	IFEN	ILEN	IREN	IFS	ILS	IRS
																									r	rw	rw	rw	rw	rw	rw

Bits 31:7 Reserved, must be kept at reset value

Bit 6 **FEMPT:** FIFO empty.

Read-only bit that provides the status of the FIFO

0: FIFO not empty

1: FIFO empty

Bit 5 **IFEN:** Interrupt falling edge detection enable bit

0: Interrupt falling edge detection request disabled

1: Interrupt falling edge detection request enabled

Bit 4 **ILEN:** Interrupt high-level detection enable bit
0: Interrupt high-level detection request disabled
1: Interrupt high-level detection request enabled

Bit 3 **IREN:** Interrupt rising edge detection enable bit
0: Interrupt rising edge detection request disabled
1: Interrupt rising edge detection request enabled

Bit 2 **IFS:** Interrupt falling edge status
The flag is set by hardware and reset by software.
0: No interrupt falling edge occurred
1: Interrupt falling edge occurred

Note: This bit is set by programming it to 1 by software.

Bit 1 **ILS:** Interrupt high-level status
The flag is set by hardware and reset by software.
0: No Interrupt high-level occurred
1: Interrupt high-level occurred

Bit 0 **IRS:** Interrupt rising edge status
The flag is set by hardware and reset by software.
0: No interrupt rising edge occurred
1: Interrupt rising edge occurred

Note: This bit is set by programming it to 1 by software.

Common memory space timing register 2..4 (FMC_PMEM2..4)

Address offset: Address: 0x48 + 0x20 * (x – 1), x = 2..4

Reset value: 0xFCFC FCFC

Each FMC_PMEMx (x = 2..4) read/write register contains the timing information for PC Card or NAND Flash memory bank x. This information is used to access either the common memory space of the 16-bit PC Card/CompactFlash, or the NAND Flash for command, address write access and data read/write access.

31	30	29	28	27	26	25	24	23	22	21	20	19	18	17	16	15	14	13	12	11	10	9	8	7	6	5	4	3	2	1	0
MEMHIZ[7:0]								MEMHOLD[7:0]								MEMWAIT[7:0]								MEMSET[7:0]							
rw	rw	rw	rw	rw	rw	rw	rw	rw	rw	rw	rw	rw	rw	rw	rw	rw	rw	rw	rw	rw	rw	rw	rw	rw	rw	rw	rw	rw	rw	rw	rw

Bits 31:24 **MEMHIZ[7:0]:** Common memory x data bus Hi-Z time
Defines the number of HCLK clock cycles during which the data bus is kept Hi-Z after the start of a PC Card/NAND Flash write access to common memory space on socket x. This is only valid for write transactions:
0000 0000: 1 HCLK cycle
1111 1110: 255 HCLK cycles
1111 1111: Reserved.

Bits 23:16 **MEMHOLD[7:0]:** Common memory x hold time

For NAND Flash read accesses to the common memory space, these bits define the number of (HCLK+2) clock cycles during which the address is held after the command is deasserted (NWE, NOE).

For NAND Flash write accesses to the common memory space, these bits define the number of HCLK clock cycles during which the data are held after the command is deasserted (NWE, NOE).

0000 0000: reserved

0000 0001: 1 HCLK cycle for write accesses, 3 HCLK cycles for read accesses

1111 1110: 254 HCLK cycle for write accesses, 256 HCLK cycles for read accesses

1111 1111: Reserved.

Bits 15:8 **MEMWAIT[7:0]:** Common memory x wait time

Defines the minimum number of HCLK (+1) clock cycles to assert the command (NWE, NOE), for PC Card/NAND Flash read or write access to common memory space on socket x. The duration of command assertion is extended if the wait signal (NWAIT) is active (low) at the end of the programmed value of HCLK:

0000 0000: reserved

0000 0001: 2 HCLK cycles (+ wait cycle introduced by deasserting NWAIT)

1111 1110: 255 HCLK cycles (+ wait cycle introduced by deasserting NWAIT)

1111 1111: Reserved

Bits 7:0 **MEMSET[7:0]:** Common memory x setup time

Defines the number of HCLK (+1) clock cycles to set up the address before the command assertion (NWE, NOE), for PC Card/NAND Flash read or write access to common memory space on socket x:

0000 0000: 1 HCLK cycle

1111 1110: 255 HCLK cycles

1111 1111: Reserved.

Attribute memory space timing registers 2..4 (FMC_PATT2..4)

Address offset: 0x4C + 0x20 * (x – 1), x = 2..4

Reset value: 0xFCFC FCFC

Each FMC_PATTx (x = 2..4) read/write register contains the timing information for PC Card/CompactFlash or NAND Flash memory bank x. It is used for 8-bit accesses to the attribute memory space of the PC Card/CompactFlash or to access the NAND Flash for the last address write access if the timing must differ from that of previous accesses (for Ready/Busy management, refer to *Section 37.6.5: NAND Flash prewait functionality*).

31	30	29	28	27	26	25	24	23	22	21	20	19	18	17	16	15	14	13	12	11	10	9	8	7	6	5	4	3	2	1	0
ATTHIZ[7:0]								ATTHOLD[7:0]								ATTWAIT[7:0]								ATTSET[7:0]							
rw	rw	rw	rw	rw	rw	rw	rw	rw	rw	rw	rw	rw	rw	rw	rw	rw	rw	rw	rw	rw	rw	rw	rw	rw	rw	rw	rw	rw	rw	rw	rw

Bits 31:24 **ATTHIZ[7:0]:** Attribute memory x data bus Hi-Z time

Defines the number of HCLK clock cycles during which the data bus is kept in Hi-Z after the start of a PC CARD/NAND Flash write access to attribute memory space on socket x. Only valid for write transaction:

0000 0000: 0 HCLK cycle

1111 1110: 255 HCLK cycles

1111 1111: Reserved.

Bits 23:16 **ATTHOLD[7:0]:** Attribute memory x hold time

For PC Card/NAND Flash read accesses to attribute memory space on socket x, these bits define the number of HCLK clock cycles (HCLK +2) clock cycles during which the address is held after the command is deasserted (NWE, NOE).

For PC Card/NAND Flash write accesses to attribute memory space on socket x, these bits define the number of HCLK clock cycles during which the data are held after the command is deasserted (NWE, NOE).

0000 0000: Reserved

0000 0001: 1 HCLK cycle for write access, 3 HCLK cycles for read accesses

1111 1110: 254 HCLK cycle for write access, 256 HCLK cycles for read accesses

1111 1111: Reserved.

Bits 15:8 **ATTWAIT[7:0]:** Attribute memory x wait time

Defines the minimum number of HCLK (+1) clock cycles to assert the command (NWE, NOE), for PC Card/NAND Flash read or write access to attribute memory space on socket x. The duration for command assertion is extended if the wait signal (NWAIT) is active (low) at the end of the programmed value of HCLK:

0000 0000: reserved

0000 0001: 2 HCLK cycles (+ wait cycle introduced by deassertion of NWAIT)

1111 1110: 255 HCLK cycles (+ wait cycle introduced by the card deasserting NWAIT)

1111 1111: Reserved

Bits 7:0 **ATTSET[7:0]:** Attribute memory x setup time

Defines the number of HCLK (+1) clock cycles to set up address before the command assertion (NWE, NOE), for PC CARD/NAND Flash read or write access to attribute memory space on socket x:

0000 0000: 1 HCLK cycle

1111 1110: 255 HCLK cycles

1111 1111: Reserved

I/O space timing register 4 (FMC_PIO4)

Address offset: 0xB0
Reset value: 0xFCFCFCFC

The FMC_PIO4 read/write registers contain the timing information used to access the I/O space of the 16-bit PC Card/CompactFlash.

31	30	29	28	27	26	25	24	23	22	21	20	19	18	17	16	15	14	13	12	11	10	9	8	7	6	5	4	3	2	1	0
IOHIZ[7:0]								IOHOLD[7:0]								IOWAIT[7:0]								IOSET[7:0]							
rw	rw	rw	rw	rw	rw	rw	rw	rw	rw	rw	rw	rw	rw	rw	rw	rw	rw	rw	rw	rw	rw	rw	rw	rw	rw	rw	rw	rw	rw	rw	rw

Bits 31:24 **IOHIZ[7:0]:** I/O x data bus Hi-Z time

Defines the number of HCLK clock cycles during which the data bus is kept in Hi-Z after the start of a PC Card write access to I/O space on socket x. Only valid for write transaction:

0000 0000: 0 HCLK cycle
1111 1111: 255 HCLK cycles

Bits 23:16 **IOHOLD[7:0]:** I/O x hold time

Defines the number of HCLK clock cycles during which the address is held (and data for write access) after the command deassertion (NWE, NOE), for PC Card read or write access to I/O space on socket x:

0000 0000: reserved
0000 0001: 1 HCLK cycle
1111 1111: 255 HCLK cycles

Bits 15:8 **IOWAIT[7:0]:** I/O x wait time

Defines the minimum number of HCLK (+1) clock cycles to assert the command (SMNWE, SMNOE), for PC Card read or write access to I/O space on socket x. The duration for command assertion is extended if the wait signal (NWAIT) is active (low) at the end of the programmed value of HCLK:

0000 0000: reserved, do not use this value
0000 0001: 2 HCLK cycles (+ wait cycle introduced by deassertion of NWAIT)
1111 1111: 256 HCLK cycles (+ wait cycle introduced by the Card deasserting NWAIT)

Bits 7:0 **IOSET[7:0]:** I/O x setup time

Defines the number of HCLK (+1) clock cycles to set up the address before the command assertion (NWE, NOE), for PC Card read or write access to I/O space on socket x:

0000 0000: 1 HCLK cycle
1111 1111: 256 HCLK cycles

ECC result registers 2/3 (FMC_ECCR2/3)

Address offset: 0x54 + 0x20 * (x – 1), x = 2 or 3

Reset value: 0x0000 0000

These registers contain the current error correction code value computed by the ECC computation modules of the FMC controller (one module per NAND Flash memory bank). When the CPU reads the data from a NAND Flash memory page at the correct address (refer to *Section 37.6.6: Computation of the error correction code (ECC) in NAND Flash memory*), the data read/written from/to the NAND Flash memory are processed automatically by the ECC computation module. When X byte have been read (according to the ECCPS field in the FMC_PCRx registers), the CPU must read the computed ECC value from the FMC_ECCx registers. It then verifies if these computed parity data are the same as the parity value recorded in the spare area, to determine whether a page is valid, and, to correct it otherwise. The FMC_ECCRx registers should be cleared after being read by setting the ECCEN bit to ‘0’. To compute a new data block, the ECCEN bit must be set to ’1’.

31	30	29	28	27	26	25	24	23	22	21	20	19	18	17	16	15	14	13	12	11	10	9	8	7	6	5	4	3	2	1	0
ECC[31:0]																															
r																															

Bits 31:0 **ECC[31:0]:** ECC result

This field contains the value computed by the ECC computation logic. *Table 295* describes the contents of these bit fields.

Table 295. ECC result relevant bits

ECCPS[2:0]	Page size in byte	ECC bits
000	256	ECC[21:0]
001	512	ECC[23:0]
010	1024	ECC[25:0]
011	2048	ECC[27:0]
100	4096	ECC[29:0]
101	8192	ECC[31:0]

37.7 SDRAM controller

37.7.1 SDRAM controller main features

The main features of the SDRAM controller are the following:

- Two SDRAM banks with independent configuration
- 8-bit, 16-bit, 32-bit data bus width
- 13-bits Address Row, 11-bits Address Column, 4 internal banks: 4x16Mx32bit (256 MB), 4x16Mx16bit (128 MB), 4x16Mx8bit (64 MB)
- Word, half-word, byte access
- SDRAM clock can be HCLK/2 or HCLK/3
- Automatic row and bank boundary management
- Multibank ping-pong access
- Programmable timing parameters
- Automatic Refresh operation with programmable Refresh rate
- Self-refresh mode
- Power-down mode
- SDRAM power-up initialization by software
- CAS latency of 1,2,3
- Cacheable Read FIFO with depth of 6 lines x32-bit (6 x14-bit address tag)

37.7.2 SDRAM External memory interface signals

At startup, the SDRAM I/O pins used to interface the FMC SDRAM controller with the external SDRAM devices must configured by the user application. The SDRAM controller I/O pins which are not used by the application, can be used for other purposes.

Table 296. SDRAM signals

SDRAM signal	I/O type	Description	Alternate function
SDCLK	O	SDRAM clock	
SDCKE[1:0]	O	SDCKE0: SDRAM Bank 1 Clock Enable SDCKE1: SDRAM Bank 2 Clock Enable	
SDNE[1:0]	O	SDNE0: SDRAM Bank 1 Chip Enable SDNE1: SDRAM Bank 2 Chip Enable	
A[12:0]	O	Address	FMC_A[12:0]
D[31:0]	I/O	Bidirectional data bus	FMC_D[31:0]
BA[1:0]	O	Bank Address	FMC_A[15:14]
NRAS	O	Row Address Strobe	
NCAS	O	Column Address Strobe	
SDNWE	O	Write Enable	
NBL[3:0]	O	Output Byte Mask for write accesses (memory signal name: DQM[3:0])	FMC_NBL[3:0]

37.7.3 SDRAM controller functional description

All SDRAM controller outputs (signals, address and data) change on the falling edge of the memory clock (FMC_SDCLK).

SDRAM initialization

The initialization sequence is managed by software. If the two banks are used, the initialization sequence must be generated simultaneously to Bank 1and Bank 2 by setting the Target Bank bits CTB1 and CTB2 in the FMC_SDCMR register:

1. Program the memory device features into the FMC_SDCRx register.The SDRAM clock frequency, RBURST and RPIPE must be programmed in the FMC_SDCR1 register.
2. Program the memory device timing into the FMC_SDTRx register. The TRP and TRC timings must be programmed in the FMC_SDTR1 register.
3. Set MODE bits to ‘001’ and configure the Target Bank bits (CTB1 and/or CTB2) in the FMC_SDCMR register to start delivering the clock to the memory (SDCKE is driven high).
4. Wait during the prescribed delay period. Typical delay is around 100 µs (refer to the SDRAM datasheet for the required delay after power-up).
5. Set MODE bits to ‘010’ and configure the Target Bank bits (CTB1 and/or CTB2) in the FMC_SDCMR register to issue a “Precharge All” command.
6. Set MODE bits to ‘011’, and configure the Target Bank bits (CTB1 and/or CTB2) as well as the number of consecutive Auto-refresh commands (NRFS) in the FMC_SDCMR register. Refer to the SDRAM datasheet for the number of Auto-refresh commands that should be issued. Typical number is 8.
7. Configure the MRD field according to your SDRAM device, set the MODE bits to '100', and configure the Target Bank bits (CTB1 and/or CTB2) in the FMC_SDCMR register to issue a "Load Mode Register" command in order to program the SDRAM. In particular:
   a) The CAS latency must be selected following configured value in FMC_SDCR1/2 registers
   b) The Burst Length (BL) of 1 must be selected by configuring the M[2:0] bits to 000 in the mode register (refer to the SDRAM datasheet). If the Mode Register is not the same for both SDRAM banks, this step has to be repeated twice, once for each bank, and the Target Bank bits set accordingly.
8. Program the refresh rate in the FMC_SDRTR register

   The refresh rate corresponds to the delay between refresh cycles. Its value must be adapted to SDRAM devices.
9. For mobile SDRAM devices, to program the extended mode register it should be done once the SDRAM device is initialized: First, a dummy read access should be performed while BA1=1 and BA=0 (refer to SDRAM address mapping section for BA[1:0] address mapping) in order to select the extended mode register instead of Load mode register and then program the needed value.

At this stage the SDRAM device is ready to accept commands. If a system reset occurs during an ongoing SDRAM access, the data bus might still be driven by the SDRAM device. Therefor the SDRAM device must be first reinitialized after reset before issuing any new access by the NOR Flash/PSRAM/SRAM or NAND Flash/PC Card controller.

Note: If two SDRAM devices are connected to the FMC, all the accesses performed at the same time to both devices by the Command Mode register (Load Mode Register and Self-refresh

commands) are issued using the timing parameters configured for SDRAM Bank 1 (TMRD, TRAS and TXSR timings) in the FMC_SDTR1 register.

SDRAM controller write cycle

The SDRAM controller accepts single and burst write requests and translates them into single memory accesses. In both cases, the SDRAM controller keeps track of the active row for each bank to be able to perform consecutive write accesses to different banks (Multibank ping-pong access).

Before performing any write access, the SDRAM bank write protection must be disabled by clearing the WP bit in the FMC_SDCRx register.

Figure 478. Burst write SDRAM access waveforms

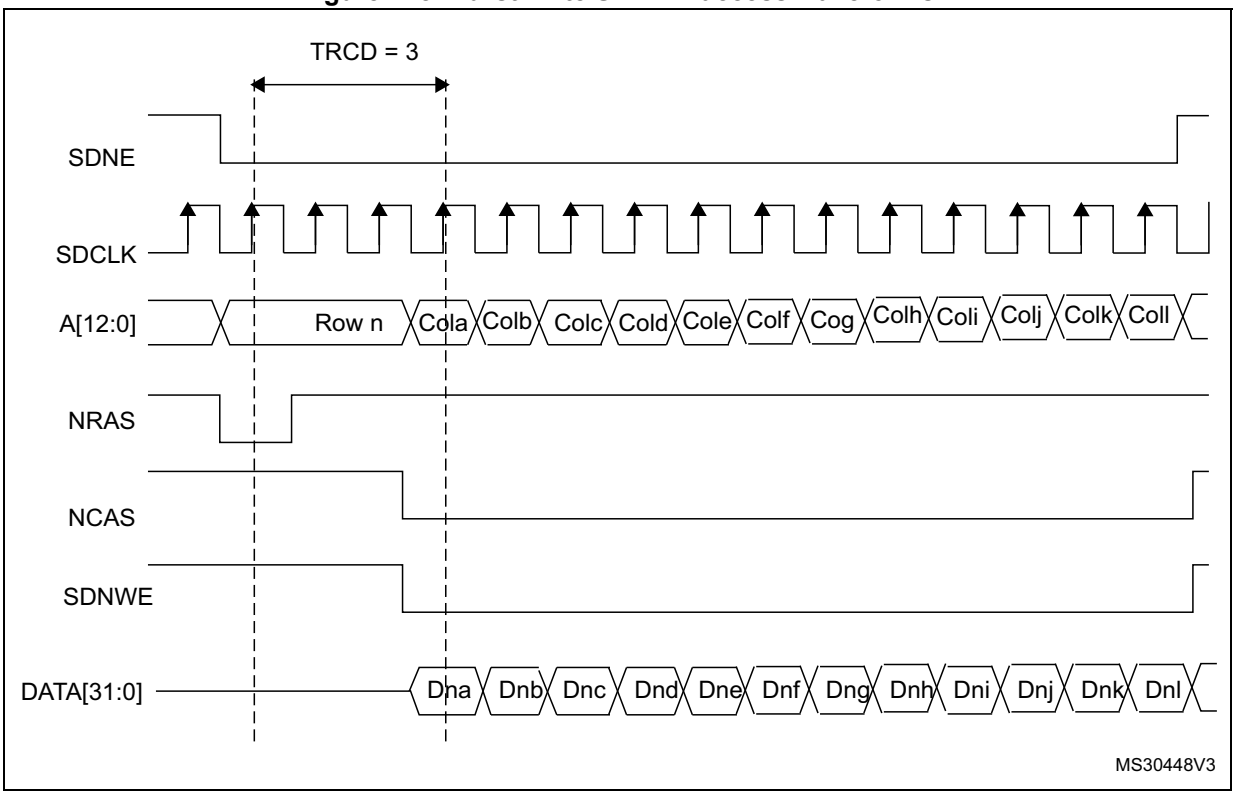

The SDRAM controller always checks the next access.

- If the next access is in the same row or in another active row, the write operation is carried out,
- if the next access targets another row (not active), the SDRAM controller generates a precharge command, activates the new row and initiates a write command.

SDRAM controller read cycle

The SDRAM controller accepts single and burst read requests and translates them into single memory accesses. In both cases, the SDRAM controller keeps track of the active row in each bank to be able to perform consecutive read accesses in different banks (Multibank ping-pong access).

Figure 479. Burst read SDRAM access

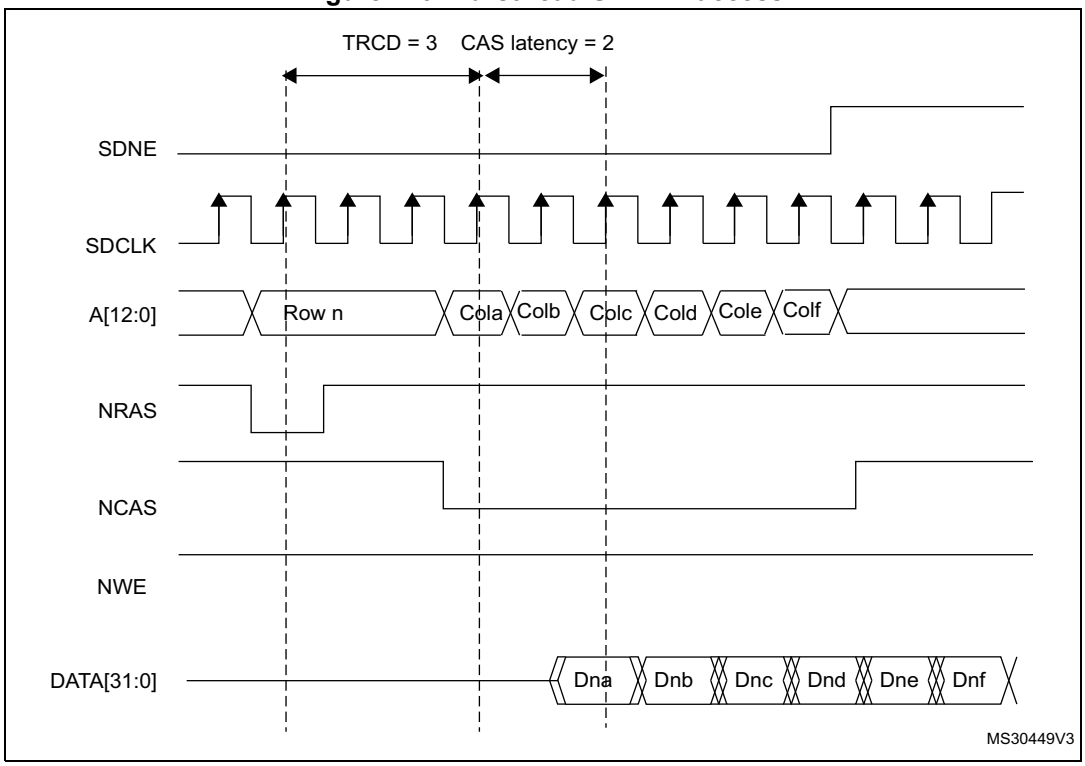

The FMC SDRAM controller features a Cacheable read FIFO (6 lines x 32 bits). It is used to store data read in advance during the CAS latency period and during the RPIPE delay. The following the formula is applied:

$$\text{Number of anticipated data} = \text{CAS latency} + 1 + (\text{RPIPE delay}) / 2$$

The RBURST bit must be set in the FMC_SDCR1 register to anticipate the next read access.

Example:

- CAS latency = 3, RPIPE delay = 0: 4 data (not committed) are stored in the FIFO.
- CAS latency = 3, RPIPE delay = 2: 5 data (not committed) are stored in the FIFO.

The read FIFO features a 14-bit address tag to each line to identify its content: 11 bits for the column address, 2 bits to select the internal bank and the active row, and 1 bit to select the SDRAM device

When the end of the row is reached in advance during an AHB burst read, the data read in advance (not committed) are not stored in the read FIFO. For single read access, data are correctly stored in the FIFO.

Each time a read request occurs, the SDRAM controller checks:

- If the address matches one of the address tags, data are directly read from the FIFO and the corresponding address tag/ line content is cleared and the remaining data in the FIFO are compacted to avoid empty lines.
- Otherwise, a new read command is issued to the memory and the FIFO is updated with new data. If the FIFO is full, the older data are lost.

Figure 480. Logic diagram of Read access with RBURST bit set (CAS=2, RPIPE=0)

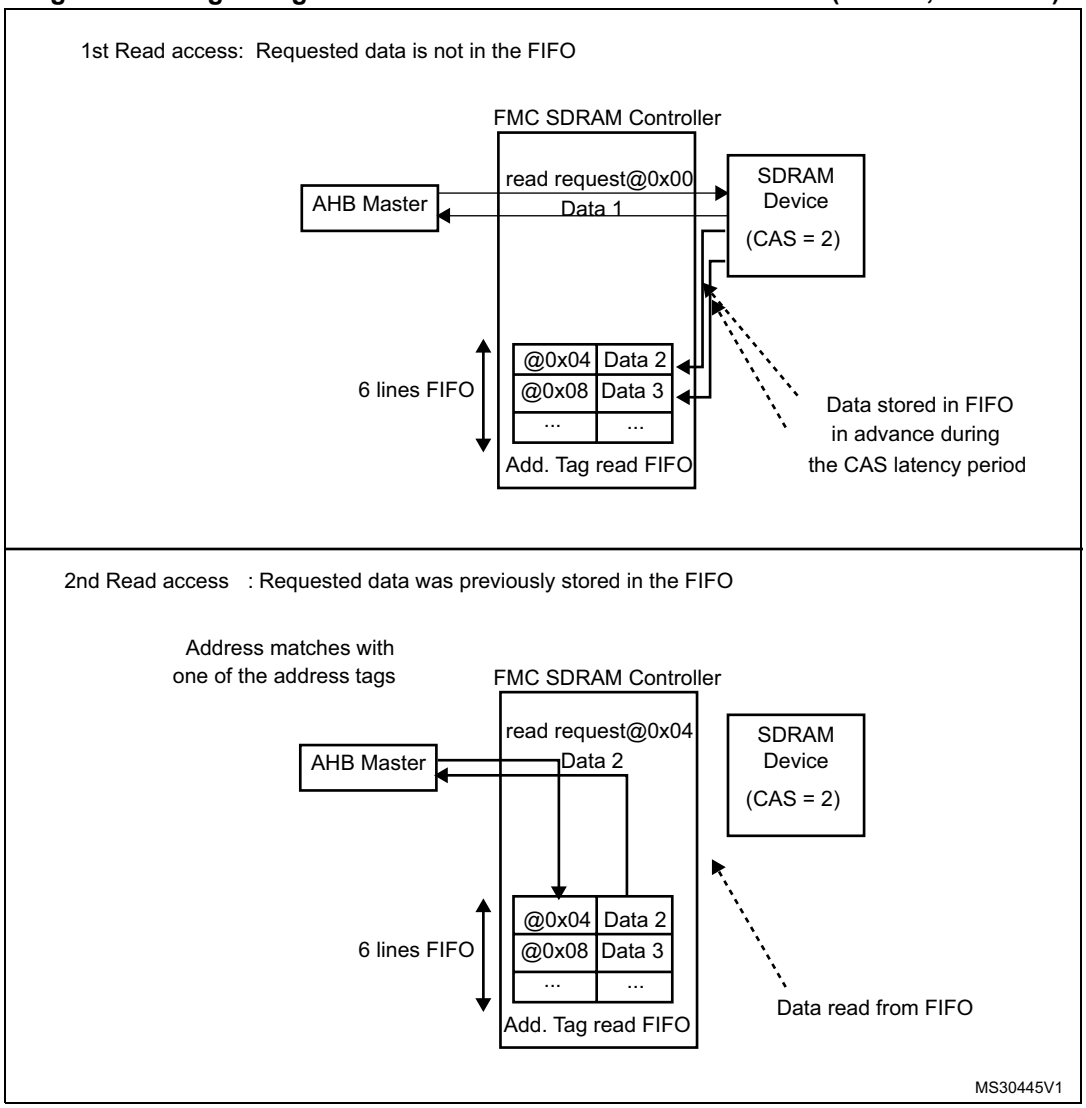

During a write access or a Precharge command, the read FIFO is flushed and ready to be filled with new data.

After the first read request, if the current access was not performed to a row boundary, the SDRAM controller anticipates the next read access during the CAS latency period and the RPIPE delay (if configured). This is done by incrementing the memory address. The following condition must be met:

- RBURST control bit should be set to ‘1’ in the FMC_SDCR1 register.

The address management depends on the next AHB request:

- Next AHB request is sequential (AHB Burst)

  In this case, the SDRAM controller increments the address.
- Next AHB request is not sequential
  - If the new read request targets the same row or another active row, the new address is passed to the memory and the master is stalled for the CAS latency period, waiting for the new data from memory.
  - If the new read request does not target an active row, the SDRAM controller generates a Precharge command, activates the new row, and initiates a read command.

If the RURST is reset, the read FIFO is not used.

Row and bank boundary management

When a read or write access crosses a row boundary, if the next read or write access is sequential and the current access was performed to a row boundary, the SDRAM controller executes the following operations:

1. Precharge of the active row,
2. Activation of the new row
3. Start of a read/write command.

At a row boundary, the automatic activation of the next row is supported for all columns and data bus width configurations.

If necessary, the SDRAM controller inserts additional clock cycles between the following commands:

- Between Precharge and Active commands to match TRP parameter (only if the next access is in a different row in the same bank),
- Between Active and Read commands to match the TRCD parameter.

These parameters are defined into the FMC_SDTRx register.

Refer to *Figure 481* and *Figure 482* for read and burst write access crossing a row boundary.

Figure 481. Read access crossing row boundary

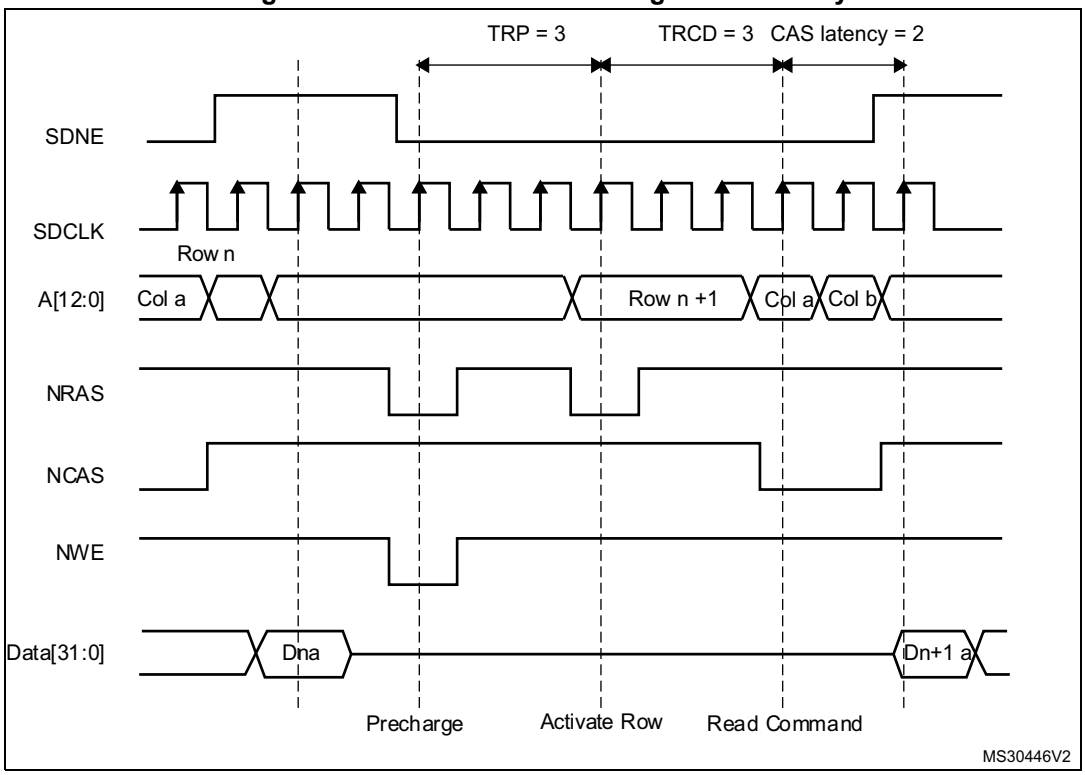

Figure 482. Write access crossing row boundary

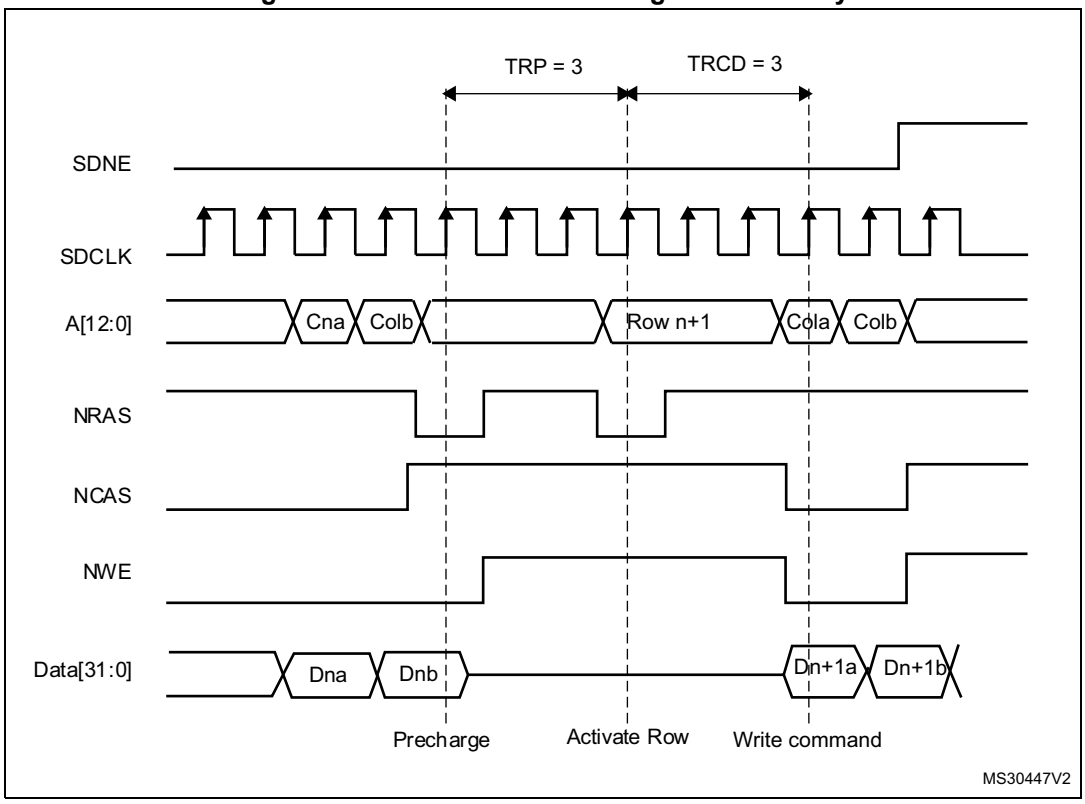

If the next access is sequential and the current access crosses a bank boundary, the SDRAM controller activates the first row in the next bank and initiates a new read/write command. Two cases are possible:

- If the current bank is not the last one, the active row in the new bank must be precharged. At a bank boundary, the automatic activation of the next row is supported for all rows/columns and data bus width configuration.
- For 13-bit row address, 11-bit column address, 4 internal banks and bus width 32-bit SDRAM memories, if the current bank is the last one and the selected SDRAM device is connected to Bank 1, the SDRAM controller continues to read/write from the second SDRAM device (assuming it has been initialized):
  a) The SDRAM controller activates the first row (after precharging the active row, if there is already an active row in the first internal bank, and initiates a new read/write command.
  b) If the first row is already activated, the SDRAM controller just initiates a read/write command.

Note: At bank boundary, if the current bank is the last one, the automatic activation of the next row is supported only when addressing 13-bit rows, 11-bit columns, 4 internal banks and 32-bit data bus SDRAM devices. Otherwise, the SDRAM address range is violated and an AHB error is generated.

SDRAM controller refresh cycle

The Auto-refresh command is used to refresh the SDRAM device content. The SDRAM controller periodically issues auto-refresh commands. An internal counter is loaded with the COUNT value in the register FMC_SDRTR. This value defines the number of memory clock cycles between the refresh cycles (refresh rate). When this counter reaches zero, an internal pulse is generated.

If a memory access is ongoing, the auto-refresh request is delayed. However, if the memory access and the auto-refresh requests are generated simultaneously, the auto-refresh request takes precedence.

If the memory access occurs during an auto-refresh operation, the request is buffered and processed when the auto-refresh is complete.

If a new auto-refresh request occurs while the previous one was not served, the RE (Refresh Error) bit is set in the Status register. An Interrupt is generated if it has been enabled (REIE = ‘1’).

If SDRAM lines are not in idle state (not all row are closed), the SDRAM controller generates a PALL (Precharge ALL) command before the auto-refresh.

If the Auto-refresh command is generated by the FMC_SDCMR Command Mode register (Mode bits = ‘011’), a PALL command (Mode bits =’ 010’) must be issued first.

37.7.4 Low power modes

Two low power modes are available:

- Self-refresh mode

  The auto-refresh cycles are performed by the SDRAM device itself to retain data without external clocking.
- Power-down mode

  The auto-refresh cycles are performed by the SDRAM controller.

Self-refresh mode

This mode is selected by setting the MODE bits to ‘101’ and by configuring the Target Bank bits (CTB1 and/or CTB2) in the FMC_SDCMR register.

The SDRAM clock stops running after a TRAS delay and the internal refresh timer stops counting only if one of the following conditions is met:

- A Self-refresh command is issued to both devices
- One of the devices is not activated (SDRAM bank is not initialized).

Before entering Self-Refresh mode, the SDRAM controller automatically issues a PALL command.

If the Write data FIFO is not empty, all data are sent to the memory before activating the Self-refresh mode and the BUSY status flag remains set.

In Self-refresh mode, all SDRAM device inputs become don’t care except for SDCKE which remains low.

The SDRAM device must remain in Self-refresh mode for a minimum period of time of TRAS and can remain in Self-refresh mode for an indefinite period beyond that. To guarantee this minimum period, the BUSY status flag remains high after the Self-refresh activation during a TRAS delay.

As soon as an SDRAM device is selected, the SDRAM controller generates a sequence of commands to exit from Self-refresh mode. After the memory access, the selected device remains in Normal mode.

To exit from Self-refresh, the MODE bits must be set to ‘000’ (Normal mode) and the Target Bank bits (CTB1 and/or CTB2) must be configured in the FMC_SDCMR register.

Figure 483. Self-refresh mode

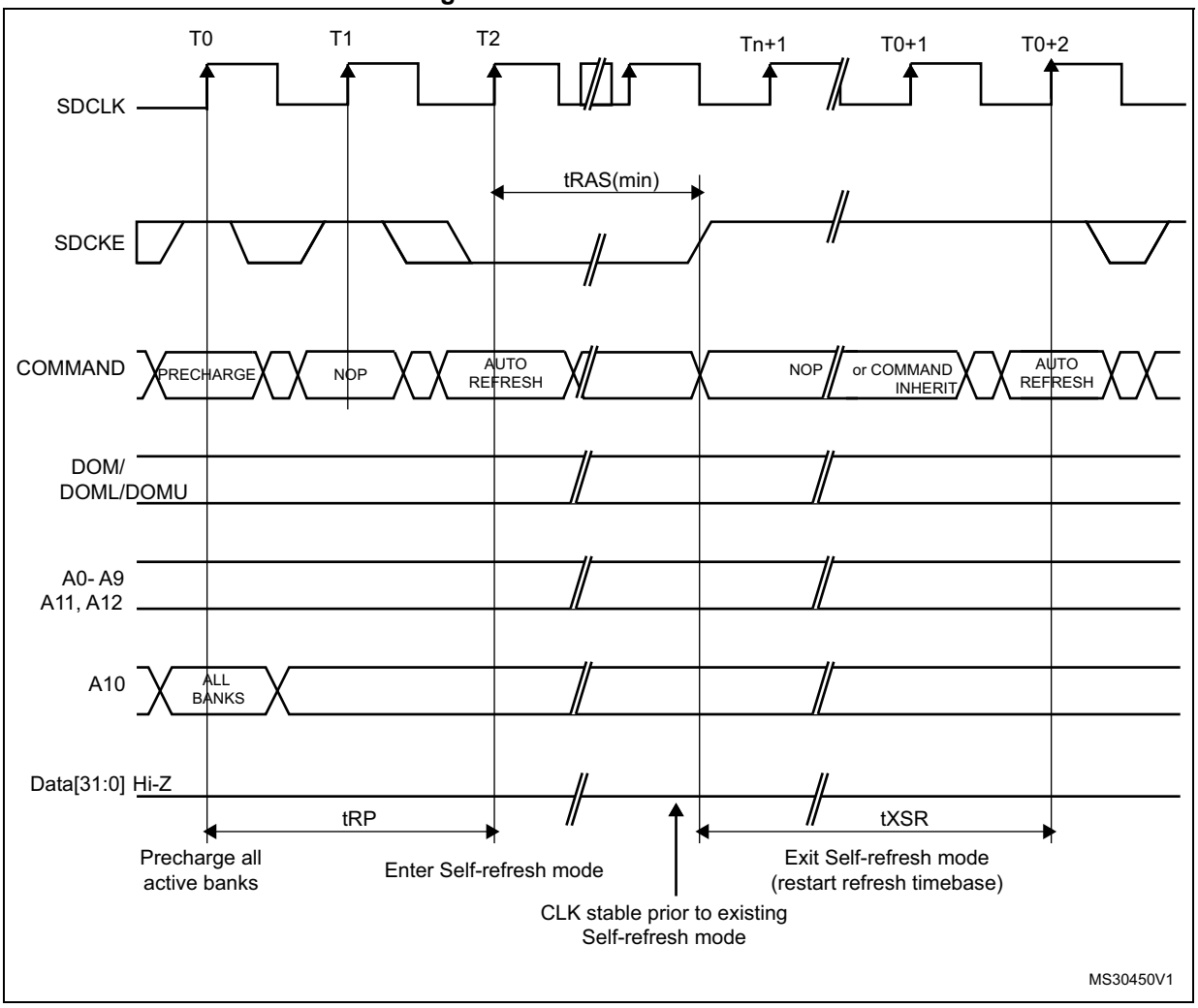

Power-down mode

This mode is selected by setting the MODE bits to ‘110’ and by configuring the Target Bank bits (CTB1 and/or CTB2) in the FMC_SDCMR register.

Figure 484. Power-down mode

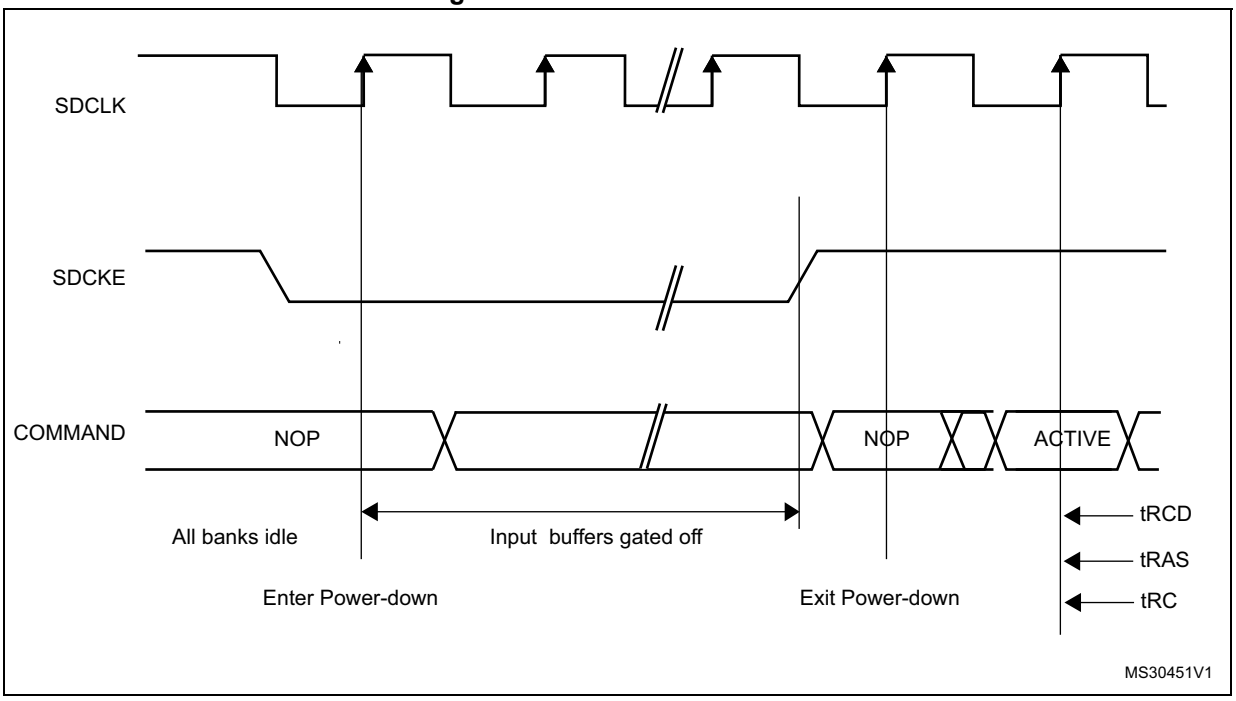

If the Write data FIFO is not empty, all data are sent to the memory before activating the Power-down mode.

As soon as an SDRAM device is selected, the SDRAM controller exits from the Power-down mode. After the memory access, the selected SDRAM device remains in Normal mode.

During Power-down mode, all SDRAM device input and output buffers are deactivated except for the SDCKE which remains low.

The SDRAM device cannot remain in Power-down mode longer than the refresh period and cannot perform the Auto-refresh cycles by itself. Therefore, the SDRAM controller carries out the refresh operation by executing the operations below:

1. Exit from Power-down mode and drive the SDCKE high
2. Generate the PALL command only if a row was active during Power-down mode
3. Generate the auto-refresh command
4. Drive SDCKE low again to return to Power-down mode.

To exit from Power-down mode, the MODE bits must be set to ‘000’ (Normal mode) and the Target Bank bits (CTB1 and/or CTB2) must be configured in the FMC_SDCMR register.

37.7.5 SDRAM controller registers

SDRAM Control registers 1,2 (FMC_SDCR1,2)

Address offset: 0x140+ 4* (x – 1), x = 1,2

Reset value: 0x0000 02D0

This register contains the control parameters for each SDRAM memory bank

31	30	29	28	27	26	25	24	23	22	21	20	19	18	17	16	15	14	13	12	11	10	9	8	7	6	5	4	3	2	1	0
Reserved																	RPIPE[1:0]		RBURST.	SDCLK[1:0]		WP	CAS[1:0]		NB	MWID[1:0]		NR[1:0]		NC[1:0]	
																	rw	rw	rw	rw	rw	rw	rw	rw	rw	rw	rw	rw	rw	rw	rw

Bits 31:15 Reserved, must be kept at reset value

Bits 14:13 **RPIPE[1:0]:** Read pipe

These bits define the delay, in HCLK clock cycles, for reading data after CAS latency.

00: No HCLK clock cycle delay
01: One HCLK clock cycle delay
10: Two HCLK clock cycle delay
11: reserved, do not use

Note: The corresponding bits in the FMC_SDCR2 register are read only.

Bit 12 **RBURST:** Burst read

This bit enables burst read mode. The SDRAM controller anticipates the next read commands during the CAS latency and stores data in the Read FIFO.

0: single read requests are not managed as bursts
1: single read requests are always managed as bursts
Note: The corresponding bit in the FMC_SDCR2 register is don't care.

Bits 11:10 **SDCLK[1:0]:** SDRAM clock configuration

These bits define the SDRAM clock period for both SDRAM banks and allow disabling the clock before changing the frequency. In this case the SDRAM must be re-initialized.

00: SDCLK clock disabled
01: Reserved
10: SDCLK period = 2 x HCLK periods
11: SDCLK period = 3 x HCLK periods

Note: The corresponding bits in the FMC_SDCR2 register are read only.

Bit 9 **WP:** Write protection

This bit enables write mode access to the SDRAM bank.

0: Write accesses allowed
1: Write accesses ignored

Bits 8:7 **CAS[1:0]:** CAS Latency

This bits sets the SDRAM CAS latency in number of memory clock cycles

00: reserved, do not use.
01: 1 cycle
10: 2 cycles
11: 3 cycles

Bit 6 **NB:** Number of internal banks
This bit sets the number of internal banks.
0: Two internal Banks
1: Four internal Banks

Bits 5:4 **MWID[1:0]:** Memory data bus width.
These bits define the memory device width.
00: 8 bits
01: 16 bits
10: 32 bits
11: reserved, do not use.

Bits 3:2 **NR[1:0]:** Number of row address bits
These bits define the number of bits of a row address.
00: 11 bit
01: 12 bits
10: 13 bits
11: reserved, do not use.

Bits 1:0 **NC[1:0]:** Number of column address bits
These bits define the number of bits of a column address.
00: 8 bits
01: 9 bits
10: 10 bits
11: 11 bits.

Note: Before modifying the RBURST or RPIPE settings or disabling the SDCLK clock, the user must first send a PALL command to make sure ongoing operations are complete.

SDRAM Timing registers 1,2 (FMC_SDTR1,2)

Address offset: 0x148 + 4 * (x – 1), x = 1,2

Reset value: 0x0FFF FFFF

This register contains the timing parameters of each SDRAM bank

31	30	29	28	27	26	25	24	23	22	21	20	19	18	17	16	15	14	13	12	11	10	9	8	7	6	5	4	3	2	1	0
Reserved				TRCD[3:0]				TRP[3:0				TWR[3:0				TRC[3:0				TRAS[3:0				TXSR[3:0				TMRD[3:0			
rw	rw	rw	rw	rw	rw	rw	rw	rw	rw	rw	rw	rw	rw	rw	rw	rw	rw	rw	rw	rw	rw	rw	rw	rw	rw	rw	rw	rw	rw	rw	rw

Bits 31:28 Reserved, must be kept at reset value

Bits 27:24 **TRCD[3:0]:** Row to column delay
These bits define the delay between the Activate command and a Read/Write command in number of memory clock cycles.
0000: 1 cycle.
0001: 2 cycles
....
1111: 16 cycles

Bits 23:20 **TRP[3:0]:** Row precharge delay

These bits define the delay between a Precharge command and another command in number of memory clock cycles. The TRP timing is only configured in the FMC_SDTR1 register. If two SDRAM devices are used, the TRP must be programmed with the timing of the slowest device.

0000: 1 cycle
0001: 2 cycles
....
1111: 16 cycles

Note: The corresponding bits in the FMC_SDTR2 register are don't care.

Bits 19:16 **TWR[3:0]:** Recovery delay

These bits define the delay between a Write and a Precharge command in number of memory clock cycles.

0000: 1 cycle
0001: 2 cycles
....
1111: 16 cycles

Note: TWR must be programmed to match the write recovery time (t_{WR}) defined in the SDRAM datasheet, and to guarantee that:

TWR ≥ TRAS - TRCD and TWR ≥TRC - TRCD - TRP

Example: TRAS= 4 cycles, TRCD= 2 cycles. So, TWR >= 2 cycles. TWR must be programmed to 0x1.

If two SDRAM devices are used, the FMC_SDTR1 and FMC_SDTR2 must be programmed with the same TWR timing corresponding to the slowest SDRAM device.

Bits 15:12 **TRC[3:0]:** Row cycle delay

These bits define the delay between the Refresh command and the Activate command, as well as d the delay between two consecutive Refresh commands. It is expressed in number of memory clock cycles. The TRC timing is only configured in the FMC_SDTR1 register. If two SDRAM devices are used, the TRC must be programmed with the timings of the slowest device.

0000: 1 cycle
0001: 2 cycles
....
1111: 16 cycles

Note: TRC must match the TRC and TRFC (Auto Refresh period) timings defined in the SDRAM device datasheet.

Note: The corresponding bits in the FMC_SDTR2 register are don't care.

Bits 11:8 **TRAS[3:0]:** Self refresh time

These bits define the minimum Self-refresh period in number of memory clock cycles.

0000: 1 cycle
0001: 2 cycles
....
1111: 16 cycles

Bits 7:4 **TXSR[3:0]:** Exit Self-refresh delay

These bits define the delay from releasing the Self-refresh command to issuing the Activate command in number of memory clock cycles.

0000: 1 cycle
0001: 2 cycles
....
1111: 16 cycles

Bits 3:0 **TMRD[3:0]:** Load Mode Register to Active

These bits define the delay between a Load Mode Register command and an Active or Refresh command in number of memory clock cycles.

0000: 1 cycle
0001: 2 cycles
....
1111: 16 cycles

Note: If two SDRAM devices are connected, all the accesses performed simultaneously to both devices by the Command Mode register (Load Mode Register and Self-refresh commands) are issued using the timing parameters configured for Bank 1 (TMRD, TRAS and TXSR timings) in the FMC_SDTR1 register.

The TRP and TRC timings are only configured in the FMC_SDTR1 register. If two SDRAM devices are used, the TRP and TRC timings must be programmed with the timings of the slowest device.

SDRAM Command Mode register (FMC_SDCMR)

Address offset: 0x150

Reset value: 0x0000 0000

This register contains the command issued when the SDRAM device is accessed. This register is used to initialize the SDRAM device, and to activate the Self-refresh and the Power-down modes. As soon as the MODE field is written, the command will be issued only to one or to both SDRAM banks according to CTB1 and CTB2 command bits. This register is the same for both SDRAM banks.

31	30	29	28	27	26	25	24	23	22	21	20	19	18	17	16	15	14	13	12	11	10	9	8	7	6	5	4	3	2	1	0
Reserved										MRD[11:0]													NRFS[3:0]				CTB1	CTB2	MODE[2:0]		
										rw	rw	rw	rw	rw	rw	rw	rw	rw	rw	rw	rw	rw	rw	rw	rw	rw	w	w	w	w	w

Bits 31:22 Reserved, must be kept at reset value

Bits 21:9 **MRD[11:0]:** Mode Register definition

This 13-bit field defines the SDRAM Mode Register content. The Mode Register is programmed using the Load Mode Register command.

Bits 8:5 **NRFS[3:0]:** Number of Auto-refresh

These bits define the number of consecutive Auto-refresh commands issued when MODE = ‘011’.

0000: 1 Auto-refresh cycle
0001: 2 Auto-refresh cycles
....
1110: 15 Auto-refresh cycles
1111: Reserved

Bit 4 **CTB1:** Command Target Bank 1

This bit indicates whether the command will be issued to SDRAM Bank 1 or not.

0: Command not issued to SDRAM Bank 1
1: Command issued to SDRAM Bank 1

Bit 3 **CTB2:** Command Target Bank 2

This bit indicates whether the command will be issued to SDRAM Bank 2 or not.

0: Command not issued to SDRAM Bank 2

1: Command issued to SDRAM Bank 2

Bits 2:0 **MODE[2:0]:** Command mode

These bits define the command issued to the SDRAM device.

000: Normal Mode

001: Clock Configuration Enable

010: PALL (“All Bank Precharge”) command

011: Auto-refresh command

100: Load Mode Register

101: Self-refresh command

110: Power-down command

111: Reserved

Note: When a command is issued, at least one Command Target Bank bit (CBT1 or CBT2) must be set. If both banks are used, the commands must be issued to the two banks at the same time by setting the CBT1 and CBT2 bits.

SDRAM Refresh Timer register (FMC_SDRTR)

Address offset:0x154

Reset value: 0x0000 0000

This register sets the refresh rate in number of SDCLK clock cycles between the refresh cycles by configuring the Refresh Timer Count value.

$$\text{Refresh rate} = (\text{SDRAM refresh rate} \times \text{SDRAM clock frequency}) - 20$$

$$\text{SDRAM refresh rate} = \text{SDRAM refresh period} / \text{Number of rows}$$

Example

$$\text{SDRAM refresh rate} = 64\ \text{ms} / (8196\text{rows}) = 7.81\mu\text{s}$$

where 64 ms is the SDRAM refresh period.

$$7.81\mu\text{s} \times 60\text{MHz} = 468.6$$

The refresh rate must be increased by 20 SDRAM clock cycles (as in the above example) to obtain a safe margin if an internal refresh request occurs when a read request has been accepted. It corresponds to a COUNT value of ‘0000111000000’ (448).

This 13-bit field is loaded into a timer which is decremented using the SDRAM clock. This timer generates a refresh pulse when zero is reached. The COUNT value must be set at least to 41 SDRAM clock cycles.

As soon as the FMC_SDRTR register is programmed, the timer starts counting. If the value programmed in the register is ’0’, no refresh is carried out. This register must not be reprogrammed after the initialization procedure to avoid modifying the refresh rate.

Each time a refresh pulse is generated, this 13-bit COUNT field is reloaded into the counter.

If a memory access is in progress, the Auto-refresh request is delayed. However, if the memory access and Auto-refresh requests are generated simultaneously, the Auto-refresh takes precedence. If the memory access occurs during a refresh operation, the request is buffered to be processed when the refresh is complete.

This register common to SDRAM bank 1 and bank 2.

31	30	29	28	27	26	25	24	23	22	21	20	19	18	17	16	15	14	13	12	11	10	9	8	7	6	5	4	3	2	1	0
Reserved																	REIE	COUNT[12:0]													CRE
																	rw	rw	rw	rw	rw	rw	rw	rw	rw	rw	rw	rw	rw	rw	w

Bits 31: 15 Reserved, must be kept at reset value

Bit 14 **REIE:** RES Interrupt Enable

0: Interrupt is disabled

1: An Interrupt is generated if RE = 1

Bits 13:1 **COUNT[12:0]:** Refresh Timer Count

This 13-bit field defines the refresh rate of the SDRAM device. It is expressed in number of memory clock cycles. It must be set at least to 41 SDRAM clock cycles (0x29).

COUNT = (SDRAM refresh rate x SDRAM clock frequency) - 20

SDRAM refresh rate = SDRAM refresh period / Number of rows

Bit 0 **CRE:** Clear Refresh error flag

This bit is used to clear the Refresh Error Flag (RE) in the Status Register.

0: no effect

1: Refresh Error flag is cleared

Note: The programmed COUNT value must not be equal to the sum of the following timings: TWR+TRP+TRC+TRCD+4 memory clock cycles .

SDRAM Status register (FMC_SDSR)

Address offset: 0x158

Reset value: 0x0000 0000

31	30	29	28	27	26	25	24	23	22	21	20	19	18	17	16	15	14	13	12	11	10	9	8	7	6	5	4	3	2	1	0
Reserved																										BUSY	MODES2[1:0]		MODES1[1:0]		RE
																										r	r	r	r	r	r

Bits 31:5 Reserved, must be kept at reset value

Bit 5 **BUSY:** Busy status

This bit defines the status of the SDRAM controller after a Command Mode request

0: SDRAM Controller is ready to accept a new request

1; SDRAM Controller is not ready to accept a new request

Bits 4:3 **MODES2[1:0]:** Status Mode for Bank 2

This bit defines the Status Mode of SDRAM Bank 2.

00: Normal Mode

01: Self-refresh mode

10: Power-down mode

Bits 2:1 **MODES1[1:0]:** Status Mode for Bank 1
This bit defines the Status Mode of SDRAM Bank 1.
00: Normal Mode
01: Self-refresh mode
10: Power-down mode

Bit 0 **RE:** Refresh error flag
0: No refresh error has been detected
1: A refresh error has been detected
An interrupt is generated if REIE = 1 and RE = 1

37.8 FMC register map

The following table summarizes the FMC registers.

Table 297. FMC register map

Offset	Register	31	30	29	28	27	26	25	24	23	22	21	20	19	18	17	16	15	14	13	12	11	10	9	8	7	6	5	4	3	2	1	0
0x00	FMC_BCR1	Reserved											CCLKEN	CBURSTRW	CPSIZE[2:0]			ASYNCWAIT	EXTMOD	WAITEN	WREN	WAITCFG	WRAPMOD	WAITPOL	BURSTEN	Reserved	FACCEN	MWID[1:0]		MTYP[1:0]		MUXEN	MBKEN
0x08	FMC_BCR2	Reserved												CBURSTRW	CPSIZE[2:0]			ASYNCWAIT	EXTMOD	WAITEN	WREN	WAITCFG	WRAPMOD	WAITPOL	BURSTEN	Reserved	FACCEN	MWID[1:0]		MTYP[1:0]		MUXEN	MBKEN
0x10	FMC_BCR3	Reserved												CBURSTRW	CPSIZE[2:0]			ASYNCWAIT	EXTMOD	WAITEN	WREN	WAITCFG	WRAPMOD	WAITPOL	BURSTEN	Reserved	FACCEN	MWID[1:0]		MTYP[1:0]		MUXEN	MBKEN
0x18	FMC_BCR4	Reserved												CBURSTRW	CPSIZE[2:0]			ASYNCWAIT	EXTMOD	WAITEN	WREN	WAITCFG	WRAPMOD	WAITPOL	BURSTEN	Reserved	FACCEN	MWID[1:0]		MTYP[1:0]		MUXEN	MBKEN
0x04	FMC_BTR1	Res.		ACCMOD[1:0		DATLAT[3:0]				CLKDIV[3:0]				BUSTURN[3:0]				DATAST[7:0]								ADDHLD[3:0]				ADDSET[3:0]			
0x0C	FMC_BTR2	Res.		ACCMOD[1:0		DATLAT[3:0]				CLKDIV[3:0]				BUSTURN[3:0]				DATAST[7:0]								ADDHLD[3:0]				ADDSET[3:0]			
0x14	FMC_BTR3	Res.		ACCMOD[1:0		DATLAT[3:0]				CLKDIV[3:0]				BUSTURN[3:0]				DATAST[7:0]								ADDHLD[3:0]				ADDSET[3:0]			
0x1C	FMC_BTR4	Res.		ACCMOD[1:0		DATLAT[3:0]				CLKDIV[3:0]				BUSTURN[3:0]				DATAST[7:0]								ADDHLD[3:0]				ADDSET[3:0]			
0x104	FMC_BWTR1	Res.		ACCMOD[1:0		Res.								BUSTURN[3:0]				DATAST[7:0]								ADDHLD[3:0]				ADDSET[3:0]			

Table 297. FMC register map (continued)

Offset	Register	31	30	29	28	27	26	25	24	23	22	21	20	19	18	17	16	15	14	13	12	11	10	9	8	7	6	5	4	3	2	1	0
0x10C	FMC_BWTR2	Res.		ACCMOD[1:0]		Res.								BUSTURN[3:0]				DATAST[7:0]								ADDHLD[3:0]				ADDSET[3:0]			
0x104	FMC_BWTR3	Res.		ACCMOD[1:0]		Res.								BUSTURN[3:0]				DATAST[7:0]								ADDHLD[3:0]				ADDSET[3:0]			
0x10C	FMC_BWTR4	Res.		ACCMOD[1:0]		Res.								BUSTURN[3:0]				DATAST[7:0]								ADDHLD[3:0]				ADDSET[3:0]			
0x60	FMC_PCR2	Reserved												ECCPS[2:0]			TAR[3:0]				TCLR[3:0]				Res.	ECCEN		PWID[1:0]		PTYP	PBKEN	PWAITEN	Reserved
0x80	FMC_PCR3	Reserved												ECCPS[2:0]			TAR[3:0]				TCLR[3:0]				Res.	ECCEN		PWID[1:0]		PTYP	PBKEN	PWAITEN	Reserved
0xA0	FMC_PCR4	Reserved												ECCPS[2:0]			TAR[3:0]				TCLR[3:0]				Res.	ECCEN		PWID[1:0]		PTYP	PBKEN	PWAITEN	Reserved
0x64	FMC_SR2	Reserved																								FEMPT	IFEN		ILEN	IREN	IFS	ILS	IRS
0x84	FMC_SR3	Reserved																								FEMPT	IFEN		ILEN	IREN	IFS	ILS	IRS
0xA4	FMC_SR4	Reserved																								FEMPT	IFEN		ILEN	IREN	IFS	ILS	IRS
0x68	FMC_PMEM2	MEMHIZ[7:0]								MEMHOLD[7:0]								MEMWAIT[7:0]								MEMSET[7:0]							
0x88	FMC_PMEM3	MEMHIZ[7:0]								MEMHOLD[7:0]								MEMWAIT[7:0]								MEMSET[7:0]							
0xA8	FMC_PMEM4	MEMHIZ[7:0]								MEMHOLD[7:0]								MEMWAIT[7:0]								MEMSET[7:0]							
0x6C	FMC_PATT2	ATTHIZ[7:0]								ATTHOLD[7:0]								ATTWAIT[7:0]								ATTSET[7:0]							
0x8C	FMC_PATT3	ATTHIZ[7:0]								ATTHOLD[7:0]								ATTWAIT[7:0]								ATTSET[7:0]							
0xAC	FMC_PATT4	ATTHIZ[7:0]								ATTHOLD[7:0]								ATTWAIT[7:0]								ATTSET[7:0]							
0xB0	FMC_PIO4	IOHIZ[7:0]								IOHOLD[7:0]								IOWAIT[7:0]								IOSET[7:0]							
0x74	FMC_ECCR2	ECC[31:0]																															
0x94	FMC_ECCR3	ECC[31:0]																															
0x140	FMC_SDCR_1	Reserved																	RPIPE[1:0]		RBURST	CLK[1:0]		WP	CAS[1:0]		NB	MWID[1:0]		NR[1:0]		NC[1:0]	
0x144	FMC_SDCR_2	Reserved																				CLK[1:0]		WP	CAS[1:0]		NB	MWID[1:0]		NR[1:0]		NC[1:0]	
0x148	FMC_SDTR1	Reserved				TRCD[3:0]				TRP[3:0]				TWR[3:0]				TRC[3:0]				TRAS[3:0]				TXSR[3:0]				TMRD[3:0]			
0x14C	FMC_SDTR2	Reserved				TRCD[3:0]				TRP[3:0]				TWR[3:0]				TRC[3:0]				TRAS[3:0]				TXSR[3:0]				TMRD[3:0]			
0x150	FMC_SDCMR	Reserved												MRD[12:0]											NRFS[3:0]				CTB1	CTB2	MODE[2:0]		

Table 297. FMC register map (continued)

Offset	Register	31	30	29	28	27	26	25	24	23	22	21	20	19	18	17	16	15	14	13	12	11	10	9	8	7	6	5	4	3	2	1	0
0x154	FMC_SDRTR	Reserved																	REIE	COUNT[12:0]													CRE
0x158	FMC_SDSR	Reserved																										BUSY	MODES2[1:0]		MODES1[1:0]		RE

38 Debug support (DBG)

This section applies to the whole STM32F4xx family, unless otherwise specified.

38.1 Overview

The STM32F4xx are built around a Cortex®-M4 with FPU core which contains hardware extensions for advanced debugging features. The debug extensions allow the core to be stopped either on a given instruction fetch (breakpoint) or data access (watchpoint). When stopped, the core's internal state and the system's external state may be examined. Once examination is complete, the core and the system may be restored and program execution resumed.

The debug features are used by the debugger host when connecting to and debugging the STM32F4xx MCUs.

Two interfaces for debug are available:

- Serial wire
- JTAG debug port

Figure 485. Block diagram of STM32 MCU and Cortex®-M4 with FPU-level debug support

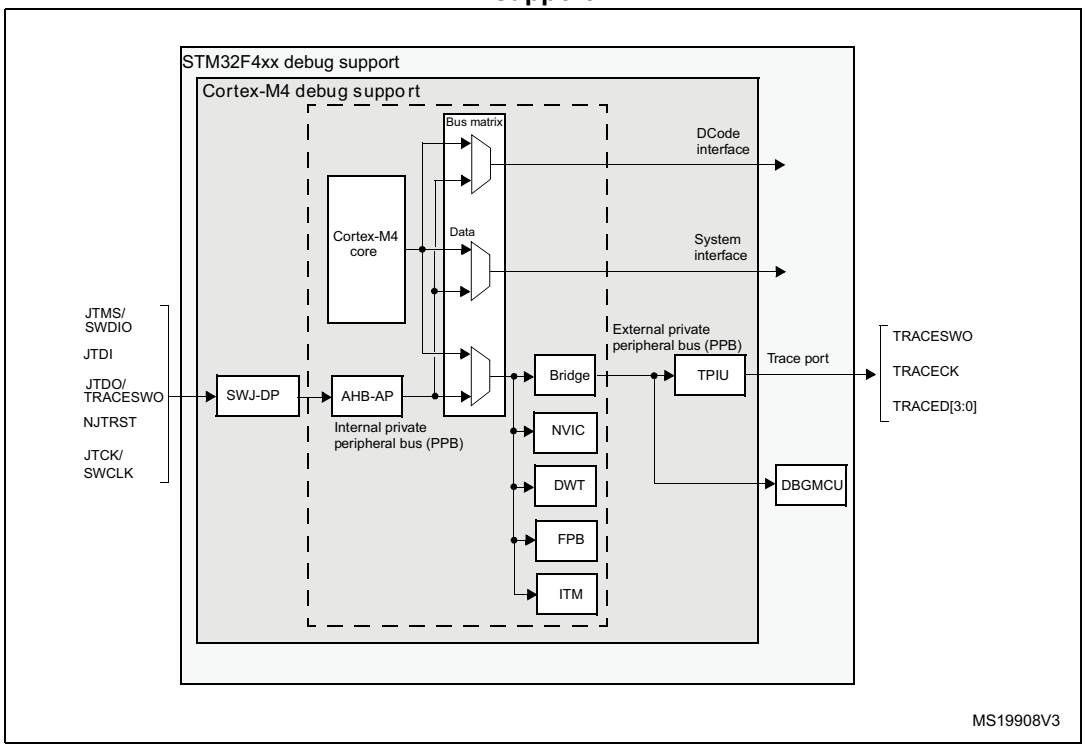

Note: The debug features embedded in the Cortex®-M4 with FPU core are a subset of the Arm® CoreSight Design Kit.

The Arm® Cortex®-M4 with FPU core provides integrated on-chip debug support. It is comprised of:

- SWJ-DP: Serial wire / JTAG debug port
- AHP-AP: AHB access port
- ITM: Instrumentation trace macrocell
- FPB: Flash patch breakpoint
- DWT: Data watchpoint trigger
- TPUI: Trace port unit interface (available on larger packages, where the corresponding pins are mapped)
- ETM: Embedded Trace Macrocell (available on larger packages, where the corresponding pins are mapped)

It also includes debug features dedicated to the STM32F4xx:

- Flexible debug pinout assignment
- MCU debug box (support for low-power modes, control over peripheral clocks, etc.)

Note: For further information on debug functionality supported by the Arm® Cortex®-M4 with FPU core, refer to the Cortex®-M4 with FPU -r0p1 Technical Reference Manual and to the CoreSight Design Kit-r0p1 TRM (see Section 38.2).

38.2 Reference Arm® documentation

- Cortex®-M4 with FPU r0p1 Technical Reference Manual (TRM)
  (see Related documents on page 1)
- Arm® Debug Interface V5
- Arm® CoreSight Design Kit revision r0p1 Technical Reference Manual

38.3 SWJ debug port (serial wire and JTAG)

The core of the STM32F4xx integrates the Serial Wire / JTAG Debug Port (SWJ-DP). It is an Arm® standard CoreSight debug port that combines a JTAG-DP (5-pin) interface and a SW-DP (2-pin) interface.

- The JTAG Debug Port (JTAG-DP) provides a 5-pin standard JTAG interface to the AHP-AP port.
- The Serial Wire Debug Port (SW-DP) provides a 2-pin (clock + data) interface to the AHP-AP port.

In the SWJ-DP, the two JTAG pins of the SW-DP are multiplexed with some of the five JTAG pins of the JTAG-DP.

Figure 486. SWJ debug port

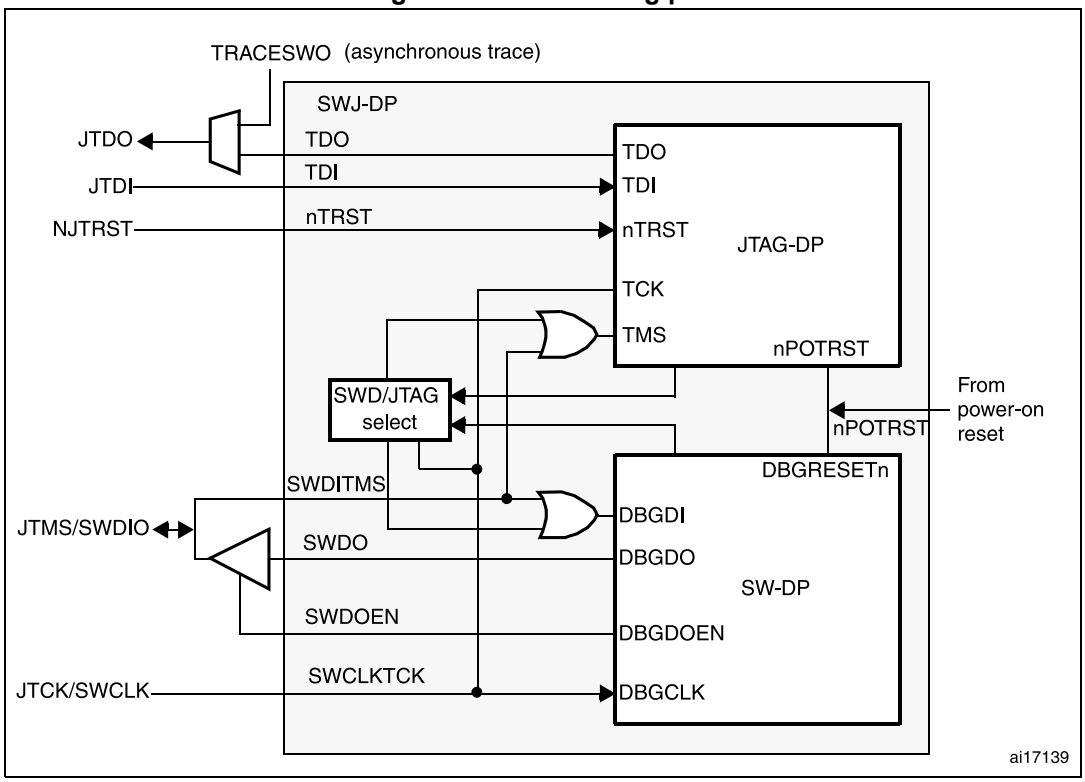

Figure 486 shows that the asynchronous TRACE output (TRACESWO) is multiplexed with TDO. This means that the asynchronous trace can only be used with SW-DP, not JTAG-DP.

38.3.1 Mechanism to select the JTAG-DP or the SW-DP

By default, the JTAG-Debug Port is active.

If the debugger host wants to switch to the SW-DP, it must provide a dedicated JTAG sequence on TMS/TCK (respectively mapped to SWDIO and SWCLK) which disables the JTAG-DP and enables the SW-DP. This way it is possible to activate the SWDP using only the SWCLK and SWDIO pins.

This sequence is:

1. Send more than 50 TCK cycles with TMS (SWDIO) =1
2. Send the 16-bit sequence on TMS (SWDIO) = 0111100111100111 (MSB transmitted first)
3. Send more than 50 TCK cycles with TMS (SWDIO) =1

38.4 Pinout and debug port pins

The STM32F4xx MCUs are available in various packages with different numbers of available pins. As a result, some functionality (ETM) related to pin availability may differ between packages.

38.4.1 SWJ debug port pins

Five pins are used as outputs from the STM32F4xx for the SWJ-DP as *alternate functions* of general-purpose I/Os. These pins are available on all packages.

Table 298. SWJ debug port pins

SWJ-DP pin name	JTAG debug port		SW debug port		Pin assignment
	Type	Description	Type	Debug assignment	
JTMS/SWDIO	I	JTAG Test Mode Selection	IO	Serial Wire Data Input/Output	PA13
JTCK/SWCLK	I	JTAG Test Clock	I	Serial Wire Clock	PA14
JTDI	I	JTAG Test Data Input	-	-	PA15
JTDO/TRACESWO	O	JTAG Test Data Output	-	TRACESWO if async trace is enabled	PB3
NJTRST	I	JTAG Test nReset	-	-	PB4

38.4.2 Flexible SWJ-DP pin assignment

After RESET (SYSRESETn or PORESETn), all five pins used for the SWJ-DP are assigned as dedicated pins immediately usable by the debugger host (note that the trace outputs are not assigned except if explicitly programmed by the debugger host).

However, the STM32F4xx MCUs offers the possibility of disabling some or all of the SWJ-DP ports and so, of releasing the associated pins for general-purpose IO (GPIO) usage. For more details on how to disable SWJ-DP port pins, please refer to *Section 8.3.2: I/O pin multiplexer and mapping*.

Table 299. Flexible SWJ-DP pin assignment

Available debug ports	SWJ IO pin assigned				
	PA13 / JTMS / SWDIO	PA14 / JTCK / SWCLK	PA15 / JTDI	PB3 / JTDO	PB4 / NJTRST
Full SWJ (JTAG-DP + SW-DP) - Reset State	X	X	X	X	X
Full SWJ (JTAG-DP + SW-DP) but without NJTRST	X	X	X	X	
JTAG-DP Disabled and SW-DP Enabled	X	X			
JTAG-DP Disabled and SW-DP Disabled	Released				

Note: When the APB bridge write buffer is full, it takes one extra APB cycle when writing the GPIO_AFR register. This is because the deactivation of the JTAGSW pins is done in two cycles to guarantee a clean level on the nTRST and TCK input signals of the core.

- Cycle 1: the JTAGSW input signals to the core are tied to 1 or 0 (to 1 for nTRST, TDI and TMS, to 0 for TCK)
- Cycle 2: the GPIO controller takes the control signals of the SWJTAG IO pins (like controls of direction, pull-up/down, Schmitt trigger activation, etc.).

38.4.3 Internal pull-up and pull-down on JTAG pins

It is necessary to ensure that the JTAG input pins are not floating since they are directly connected to flip-flops to control the debug mode features. Special care must be taken with the SWCLK/TCK pin which is directly connected to the clock of some of these flip-flops.

To avoid any uncontrolled IO levels, the device embeds internal pull-ups and pull-downs on the JTAG input pins:

- NJTRST: Internal pull-up
- JTDI: Internal pull-up
- JTMS/SWDIO: Internal pull-up
- TCK/SWCLK: Internal pull-down

Once a JTAG IO is released by the user software, the GPIO controller takes control again. The reset states of the GPIO control registers put the I/Os in the equivalent state:

- NJTRST: AF input pull-up
- JTDI: AF input pull-up
- JTMS/SWDIO: AF input pull-up
- JTCK/SWCLK: AF input pull-down
- JTDO: AF output floating

The software can then use these I/Os as standard GPIOs.

Note: The JTAG IEEE standard recommends to add pull-ups on TDI, TMS and nTRST but there is no special recommendation for TCK. However, for JTCK, the device needs an integrated pull-down.

Having embedded pull-ups and pull-downs removes the need to add external resistors.

38.4.4 Using serial wire and releasing the unused debug pins as GPIOs

To use the serial wire DP to release some GPIOs, the user software must change the GPIO (PA15, PB3 and PB4) configuration mode in the GPIO_MODER register. This releases PA15, PB3 and PB4 which now become available as GPIOs.

When debugging, the host performs the following actions:

- Under system reset, all SWJ pins are assigned (JTAG-DP + SW-DP).
- Under system reset, the debugger host sends the JTAG sequence to switch from the JTAG-DP to the SW-DP.
- Still under system reset, the debugger sets a breakpoint on vector reset.
- The system reset is released and the Core halts.
- All the debug communications from this point are done using the SW-DP. The other JTAG pins can then be reassigned as GPIOs by the user software.

Note: For user software designs, note that:

To release the debug pins, remember that they will be first configured either in input-pull-up (nTRST, TMS, TDI) or pull-down (TCK) or output tristate (TDO) for a certain duration after reset until the instant when the user software releases the pins.

When debug pins (JTAG or SW or TRACE) are mapped, changing the corresponding IO pin configuration in the IOPORT controller has no effect.

38.5 STM32F4xx JTAG TAP connection

The STM32F4xx MCUs integrate two serially connected JTAG TAPs, the boundary scan TAP (IR is 5-bit wide) and the Cortex®-M4 with FPU TAP (IR is 4-bit wide).

To access the TAP of the Cortex®-M4 with FPU for debug purposes:

1. First, it is necessary to shift the BYPASS instruction of the boundary scan TAP.
2. Then, for each IR shift, the scan chain contains 9 bits (=5+4) and the unused TAP instruction must be shifted in using the BYPASS instruction.
3. For each data shift, the unused TAP, which is in BYPASS mode, adds 1 extra data bit in the data scan chain.

*Note: **Important**: Once Serial-Wire is selected using the dedicated Arm® JTAG sequence, the boundary scan TAP is automatically disabled (JTMS forced high).*

Figure 487. JTAG TAP connections

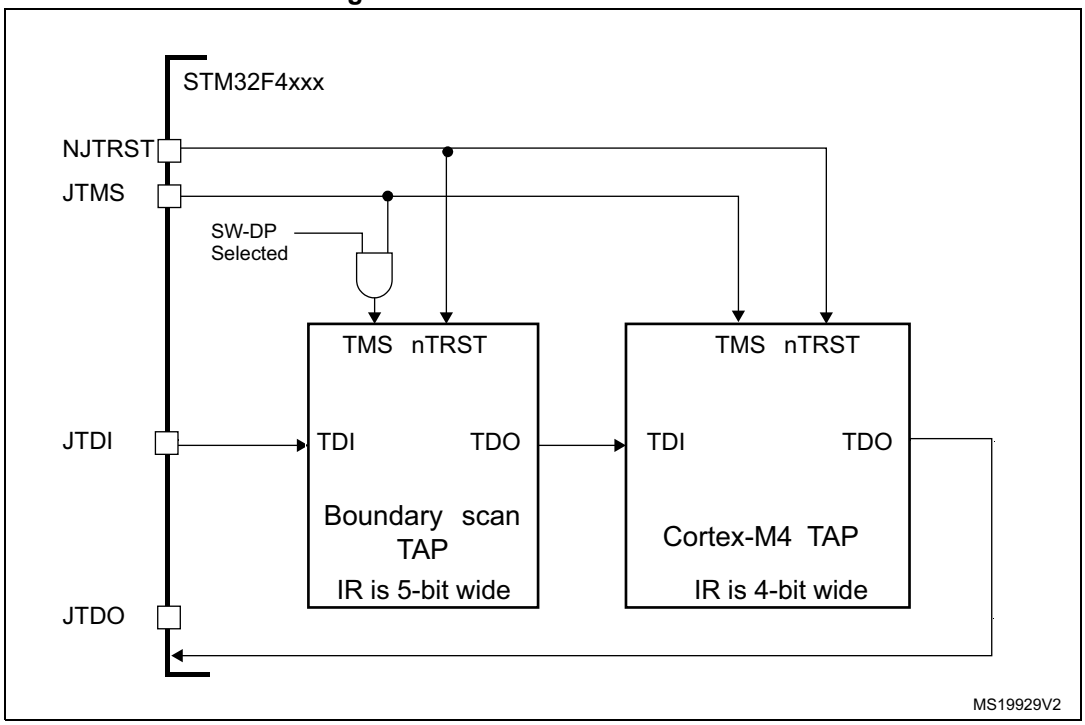

38.6 ID codes and locking mechanism

There are several ID codes inside the STM32F4xx MCUs. ST strongly recommends tools designers to lock their debuggers using the MCU DEVICE ID code located in the external PPB memory map at address 0xE0042000.

38.6.1 MCU device ID code

The STM32F4xx MCUs integrate an MCU ID code. This ID identifies the ST MCU part-number and the die revision. It is part of the DBG_MCU component and is mapped on the external PPB bus (see *Section 38.16*). This code is accessible using the JTAG debug port (four to five pins) or the SW debug port (two pins) or by the user software. It is even accessible while the MCU is under system reset.

Only the DEV_ID[11:0] should be used for identification by the debugger/programmer tools.

DBGMCU_IDCODE

Address: 0xE004 2000

Only 32-bits access supported. Read-only.

31	30	29	28	27	26	25	24	23	22	21	20	19	18	17	16
REV_ID[15:0]															
r	r	r	r	r	r	r	r	r	r	r	r	r	r	r	r

15	14	13	12	11	10	9	8	7	6	5	4	3	2	1	0
Reserved				DEV_ID[11:0]											
				r	r	r	r	r	r	r	r	r	r	r	r

Bits 31:16 **REV_ID[15:0]** Revision identifier
This field indicates the revision of the device.
STM32F405xx/07xx and STM32F415xx/17xx devices:
0x1000 = Revision A
0x1001 = Revision Z
0x1003 = Revision 1
0x1007 = Revision 2
0x100F= Revision Y and 4
STM32F42xxx and STM32F43xxx devices:
0x1000 = Revision A
0x1003 = Revision Y
0x1007 = Revision 1
0x2001= Revision 3
0x2003= Revision 5 and B

Bits 15:12 Reserved, must be kept at reset value.

Bits 11:0 **DEV_ID[11:0]**: Device identifier (STM32F405xx/07xx and STM32F415xx/17xx)
The device ID is 0x413.

Bits 11:0 **DEV_ID[11:0]**: Device identifier (STM32F42xxx and STM32F43xxx)
The device ID is 0x419

38.6.2 Boundary scan TAP

JTAG ID code

The TAP of the STM32F4xx BSC (boundary scan) integrates a JTAG ID code equal to .

- 0x06413041 for STM32F405xx/07xx and STM32F415xx/17xx devices
- 0x06419041 for STM32F42xxx and STM32F43xxx devices

38.6.3 Cortex®-M4 with FPU TAP

The TAP of the Arm® Cortex®-M4 with FPU integrates a JTAG ID code. This ID code is the Arm® default one and has not been modified. This code is only accessible by the JTAG Debug Port, it is 0x4BA00477 (corresponds to Cortex®-M4 with FPU r0p1, see *Section 38.2*).

38.6.4 Cortex®-M4 with FPU JEDEC-106 ID code

The Arm® Cortex®-M4 with FPU integrates a JEDEC-106 ID code. It is located in the 4 KB ROM table mapped on the internal PPB bus at address 0xE00FF000_0xE00FFFFF.

This code is accessible by the JTAG Debug Port (4 to 5 pins) or by the SW Debug Port (two pins) or by the user software.

38.7 JTAG debug port

A standard JTAG state machine is implemented with a 4-bit instruction register (IR) and five data registers (for full details, refer to the Cortex®-M4 with FPU r0p1 *Technical Reference Manual (TRM)*, for references, see *Section 38.2)*.

Table 300. JTAG debug port data registers

IR(3:0)	Data register	Details
1111	BYPASS [1 bit]	-
1110	IDCODE [32 bits]	ID CODE 0x4BA00477 (Arm® Cortex®-M4 with FPU r0p1 ID Code)
1010	DPACC [35 bits]	Debug port access register This initiates a debug port and allows access to a debug port register. – When transferring data IN: Bits 34:3 = DATA[31:0] = 32-bit data to transfer for a write request Bits 2:1 = A[3:2] = 2-bit address of a debug port register. Bit 0 = RnW = Read request (1) or write request (0). – When transferring data OUT: Bits 34:3 = DATA[31:0] = 32-bit data which is read following a read request Bits 2:0 = ACK[2:0] = 3-bit Acknowledge: 010 = OK/FAULT 001 = WAIT OTHER = reserved Refer to *Table 301* for a description of the A[3:2] bits

Table 300. JTAG debug port data registers (continued)

IR(3:0)	Data register	Details
1011	APACC [35 bits]	Access port access register Initiates an access port and allows access to an access port register. – When transferring data IN: Bits 34:3 = DATA[31:0] = 32-bit data to shift in for a write request Bits 2:1 = A[3:2] = 2-bit address (sub-address AP registers). Bit 0 = RnW= Read request (1) or write request (0). – When transferring data OUT: Bits 34:3 = DATA[31:0] = 32-bit data which is read following a read request Bits 2:0 = ACK[2:0] = 3-bit Acknowledge: 010 = OK/FAULT 001 = WAIT OTHER = reserved There are many AP Registers (see AHB-AP) addressed as the combination of: – The shifted value A[3:2] – The current value of the DP SELECT register
1000	ABORT [35 bits]	Abort register – Bits 31:1 = Reserved – Bit 0 = DAPABORT: write 1 to generate a DAP abort.

Table 301. 32-bit debug port registers addressed through the shifted value A[3:2]

Address	A[3:2] value	Description
0x0	00	Reserved, must be kept at reset value.
0x4	01	DP CTRL/STAT register. Used to: – Request a system or debug power-up – Configure the transfer operation for AP accesses – Control the pushed compare and pushed verify operations. – Read some status flags (overrun, power-up acknowledges)
0x8	10	DP SELECT register: Used to select the current access port and the active 4-words register window. – Bits 31:24: APSEL: select the current AP – Bits 23:8: reserved – Bits 7:4: APBANKSEL: select the active 4-words register window on the current AP – Bits 3:0: reserved
0xC	11	DP RDBUFF register: Used to allow the debugger to get the final result after a sequence of operations (without requesting new JTAG-DP operation)

38.8 SW debug port

38.8.1 SW protocol introduction

This synchronous serial protocol uses two pins:

- SWCLK: clock from host to target
- SWDIO: bidirectional

The protocol allows two banks of registers (DPACC registers and APACC registers) to be read and written to.

Bits are transferred LSB-first on the wire.

For SWDIO bidirectional management, the line must be pulled-up on the board (100 KΩ recommended by Arm®).

Each time the direction of SWDIO changes in the protocol, a turnaround time is inserted where the line is not driven by the host nor the target. By default, this turnaround time is one bit time, however this can be adjusted by configuring the SWCLK frequency.

38.8.2 SW protocol sequence

Each sequence consist of three phases:

1. Packet request (8 bits) transmitted by the host
2. Acknowledge response (3 bits) transmitted by the target
3. Data transfer phase (33 bits) transmitted by the host or the target

Table 302. Packet request (8-bits)

Bit	Name	Description
0	Start	Must be “1”
1	APnDP	0: DP Access 1: AP Access
2	RnW	0: Write Request 1: Read Request
4:3	A[3:2]	Address field of the DP or AP registers (refer to *Table 301*)
5	Parity	Single bit parity of preceding bits
6	Stop	0
7	Park	Not driven by the host. Must be read as “1” by the target because of the pull-up

Refer to the Cortex®-M4 with FPU r0p1 *TRM* for a detailed description of DPACC and APACC registers.

The packet request is always followed by the turnaround time (default 1 bit) where neither the host nor target drive the line.

Table 303. ACK response (3 bits)

Bit	Name	Description
0..2	ACK	001: FAULT 010: WAIT 100: OK

The ACK Response must be followed by a turnaround time only if it is a READ transaction or if a WAIT or FAULT acknowledge has been received.

Table 304. DATA transfer (33 bits)

Bit	Name	Description
0..31	WDATA or RDATA	Write or Read data
32	Parity	Single parity of the 32 data bits

The DATA transfer must be followed by a turnaround time only if it is a READ transaction.

38.8.3 SW-DP state machine (reset, idle states, ID code)

The State Machine of the SW-DP has an internal ID code which identifies the SW-DP. It follows the JEP-106 standard. This ID code is the default Arm® one and is set to **0x2BA01477** (corresponding to Cortex®-M4 with FPU r0p1).

Note: *Note that the SW-DP state machine is inactive until the target reads this ID code.*

- The SW-DP state machine is in RESET STATE either after power-on reset, or after the DP has switched from JTAG to SWD or after the line is high for more than 50 cycles
- The SW-DP state machine is in IDLE STATE if the line is low for at least two cycles after RESET state.
- After RESET state, it is **mandatory** to first enter into an IDLE state AND to perform a READ access of the DP-SW ID CODE register. Otherwise, the target will issue a FAULT acknowledge response on another transactions.

Further details of the SW-DP state machine can be found in the Cortex®-M4 with FPU r0p1 *TRM* and the *CoreSight Design Kit r0p1 TRM*.

38.8.4 DP and AP read/write accesses

- Read accesses to the DP are not posted: the target response can be immediate (if ACK=OK) or can be delayed (if ACK=WAIT).
- Read accesses to the AP are posted. This means that the result of the access is returned on the next transfer. If the next access to be done is NOT an AP access, then the DP-RDBUFF register must be read to obtain the result.
  The READOK flag of the DP-CTRL/STAT register is updated on every AP read access or RDBUFF read request to know if the AP read access was successful.
- The SW-DP implements a write buffer (for both DP or AP writes), that enables it to accept a write operation even when other transactions are still outstanding. If the write buffer is full, the target acknowledge response is “WAIT”. With the exception of

IDCODE read or CTRL/STAT read or ABORT write which are accepted even if the write buffer is full.

- Because of the asynchronous clock domains SWCLK and HCLK, two extra SWCLK cycles are needed after a write transaction (after the parity bit) to make the write effective internally. These cycles should be applied while driving the line low (IDLE state)
  This is particularly important when writing the CTRL/STAT for a power-up request. If the next transaction (requiring a power-up) occurs immediately, it will fail.

38.8.5 SW-DP registers

Access to these registers are initiated when APnDP=0

Table 305. SW-DP registers

A[3:2]	R/W	CTRLSEL bit of SELECT register	Register	Notes
00	Read	-	IDCODE	The manufacturer code is not set to ST code. **0x2BA01477** (identifies the SW-DP)
00	Write	-	ABORT	-
01	Read/Write	0	DP-CTRL/STAT	Purpose is to: – request a system or debug power-up – configure the transfer operation for AP accesses – control the pushed compare and pushed verify operations. – read some status flags (overrun, power-up acknowledges)
01	Read/Write	1	WIRE CONTROL	Purpose is to configure the physical serial port protocol (like the duration of the turnaround time)
10	Read	-	READ RESEND	Enables recovery of the read data from a corrupted debugger transfer, without repeating the original AP transfer.
10	Write	-	SELECT	The purpose is to select the current access port and the active 4-words register window
11	Read/Write	-	READ BUFFER	This read buffer is useful because AP accesses are posted (the result of a read AP request is available on the next AP transaction). This read buffer captures data from the AP, presented as the result of a previous read, without initiating a new transaction

38.8.6 SW-AP registers

Access to these registers are initiated when APnDP=1

There are many AP Registers (see AHB-AP) addressed as the combination of:

- The shifted value A[3:2]
- The current value of the DP SELECT register

38.9 AHB-AP (AHB access port) - valid for both JTAG-DP and SW-DP

Features:

- System access is independent of the processor status.
- Either SW-DP or JTAG-DP accesses AHB-AP.
- The AHB-AP is an AHB master into the Bus Matrix. Consequently, it can access all the data buses (Dcode Bus, System Bus, internal and external PPB bus) but the ICode bus.
- Bitband transactions are supported.
- AHB-AP transactions bypass the FPB.

The address of the 32-bits AHP-AP resisters are 6-bits wide (up to 64 words or 256 bytes) and consists of:

c) Bits [7:4] = the bits [7:4] APBANKSEL of the DP SELECT register

d) Bits [3:2] = the 2 address bits of A[3:2] of the 35-bit packet request for SW-DP.

The AHB-AP of the Cortex®-M4 with FPU includes 9 x 32-bits registers:

Table 306. Cortex®-M4 with FPU AHB-AP registers

Address offset	Register name	Notes
0x00	AHB-AP Control and Status Word	Configures and controls transfers through the AHB interface (size, hprot, status on current transfer, address increment type
0x04	AHB-AP Transfer Address	-
0x0C	AHB-AP Data Read/Write	-
0x10	AHB-AP Banked Data 0	Directly maps the 4 aligned data words without rewriting the Transfer Address Register.
0x14	AHB-AP Banked Data 1	
0x18	AHB-AP Banked Data 2	
0x1C	AHB-AP Banked Data 3	
0xF8	AHB-AP Debug ROM Address	Base Address of the debug interface
0xFC	AHB-AP ID Register	-

Refer to the Cortex®-M4 with FPU *r0p1 TRM* for further details.

38.10 Core debug

Core debug is accessed through the core debug registers. Debug access to these registers is by means of the *Advanced High-performance Bus* (AHB-AP) port. The processor can access these registers directly over the internal *Private Peripheral Bus* (PPB).

It consists of 4 registers:

Table 307. Core debug registers

Register	Description
DHCSR	The 32-bit Debug Halting Control and Status Register This provides status information about the state of the processor enable core debug halt and step the processor
DCRSR	The 17-bit Debug Core Register Selector Register: This selects the processor register to transfer data to or from.
DCRDR	The 32-bit Debug Core Register Data Register: This holds data for reading and writing registers to and from the processor selected by the DCRSR (Selector) register.
DEMCR	The 32-bit Debug Exception and Monitor Control Register: This provides Vector Catching and Debug Monitor Control. This register contains a bit named ***TRCENA*** which enable the use of a TRACE.

Note: ***Important****: these registers are not reset by a system reset. They are only reset by a power-on reset.*

Refer to the Cortex®-*M4 with FPU r0p1 TRM* for further details.

To Halt on reset, it is necessary to:

- enable the bit0 (VC_CORRESET) of the Debug and Exception Monitor Control Register
- enable the bit0 (C_DEBUGEN) of the Debug Halting Control and Status Register.

38.11 Capability of the debugger host to connect under system reset

The reset system of the STM32F4xx MCU comprises the following reset sources:

- POR (power-on reset) which asserts a RESET at each power-up.
- Internal watchdog reset
- Software reset
- External reset

The Cortex®-M4 with FPU differentiates the reset of the debug part (generally PORRESETn) and the other one (SYSRESETn)

This way, it is possible for the debugger to connect under System Reset, programming the Core Debug Registers to halt the core when fetching the reset vector. Then the host can release the system reset and the core will immediately halt without having executed any instructions. In addition, it is possible to program any debug features under System Reset.

Note: It is highly recommended for the debugger host to connect (set a breakpoint in the reset vector) under system reset.

38.12 FPB (Flash patch breakpoint)

The FPB unit:

- implements hardware breakpoints
- patches code and data from code space to system space. This feature gives the possibility to correct software bugs located in the Code Memory Space.

The use of a Software Patch or a Hardware Breakpoint is exclusive.

The FPB consists of:

- 2 literal comparators for matching against literal loads from Code Space and remapping to a corresponding area in the System Space.
- 6 instruction comparators for matching against instruction fetches from Code Space. They can be used either to remap to a corresponding area in the System Space or to generate a Breakpoint Instruction to the core.

38.13 DWT (data watchpoint trigger)

The DWT unit consists of four comparators. They are configurable as:

- a hardware watchpoint or
- a trigger to an ETM or
- a PC sampler or
- a data address sampler

The DWT also provides some means to give some profiling informations. For this, some counters are accessible to give the number of:

- Clock cycle
- Folded instructions
- Load store unit (LSU) operations
- Sleep cycles
- CPI (clock per instructions)
- Interrupt overhead

38.14 ITM (instrumentation trace macrocell)

38.14.1 General description

The ITM is an application-driven trace source that supports *printf* style debugging to trace *Operating System* (OS) and application events, and emits diagnostic system information. The ITM emits trace information as packets which can be generated as:

- **Software trace.** Software can write directly to the ITM stimulus registers to emit packets.
- **Hardware trace.** The DWT generates these packets, and the ITM emits them.
- **Time stamping.** Timestamps are emitted relative to packets. The ITM contains a 21-bit counter to generate the timestamp. The Cortex®-M4 with FPU clock or the bit clock rate of the *Serial Wire Viewer* (SWV) output clocks the counter.

The packets emitted by the ITM are output to the TPIU (Trace Port Interface Unit). The formatter of the TPIU adds some extra packets (refer to TPIU) and then output the complete packets sequence to the debugger host.

The bit TRCEN of the Debug Exception and Monitor Control Register must be enabled before programming or using the ITM.

38.14.2 Time stamp packets, synchronization and overflow packets

Time stamp packets encode time stamp information, generic control and synchronization. It uses a 21-bit timestamp counter (with possible prescalers) which is reset at each time stamp packet emission. This counter can be either clocked by the CPU clock or the SWV clock.

A synchronization packet consists of 6 bytes equal to 0x80_00_00_00_00_00 which is emitted to the TPIU as 00 00 00 00 00 80 (LSB emitted first).

A synchronization packet is a timestamp packet control. It is emitted at each DWT trigger.

For this, the DWT must be configured to trigger the ITM: the bit CYCCNTENA (bit0) of the DWT Control Register must be set. In addition, the bit2 (SYNCENA) of the ITM Trace Control Register must be set.

Note: If the SYNENA bit is not set, the DWT generates Synchronization triggers to the TPIU which will send only TPIU synchronization packets and not ITM synchronization packets.

An overflow packet consists is a special timestamp packets which indicates that data has been written but the FIFO was full.

Table 308. Main ITM registers

Address	Register	Details
@E0000FB0	ITM lock access	Write 0xC5ACCE55 to unlock Write Access to the other ITM registers
@E0000E80	ITM trace control	Bits 31-24 = Always 0
		Bits 23 = Busy
		Bits 22-16 = 7-bits ATB ID which identifies the source of the trace data.
		Bits 15-10 = Always 0
		Bits 9:8 = TSPrescale = Time Stamp Prescaler
		Bits 7-5 = Reserved
		Bit 4 = SWOENA = Enable SWV behavior (to clock the timestamp counter by the SWV clock).
		Bit 3 = DWTENA: Enable the DWT Stimulus
		Bit 2 = SYNCENA: this bit must be to 1 to enable the DWT to generate synchronization triggers so that the TPIU can then emit the synchronization packets.
		Bit 1 = TSENA (Timestamp Enable)
		Bit 0 = ITMENA: Global Enable Bit of the ITM
@E0000E40	ITM trace privilege	Bit 3: mask to enable tracing ports31:24
		Bit 2: mask to enable tracing ports23:16
		Bit 1: mask to enable tracing ports15:8
		Bit 0: mask to enable tracing ports7:0
@E0000E00	ITM trace enable	Each bit enables the corresponding Stimulus port to generate trace.
@E0000000-E000007C	Stimulus port registers 0-31	Write the 32-bits data on the selected Stimulus Port (32 available) to be traced out.

Example of configuration

To output a simple value to the TPIU:

- Configure the TPIU and assign TRACE I/Os by configuring the DBGMCU_CR (refer to *Section 38.17.2* and *Section 38.16.3*)
- Write 0xC5ACCE55 to the ITM Lock Access Register to unlock the write access to the ITM registers
- Write 0x00010005 to the ITM Trace Control Register to enable the ITM with Sync enabled and an ATB ID different from 0x00
- Write 0x1 to the ITM Trace Enable Register to enable the Stimulus Port 0
- Write 0x1 to the ITM Trace Privilege Register to unmask stimulus ports 7:0
- Write the value to output in the Stimulus Port Register 0: this can be done by software (using a printf function)

38.15 ETM (Embedded trace macrocell)

38.15.1 ETM general description

The ETM enables the reconstruction of program execution. Data are traced using the Data Watchpoint and Trace (DWT) component or the Instruction Trace Macrocell (ITM) whereas instructions are traced using the Embedded Trace Macrocell (ETM).

The ETM transmits information as packets and is triggered by embedded resources. These resources must be programmed independently and the trigger source is selected using the Trigger Event Register (0xE0041008). An event could be a simple event (address match from an address comparator) or a logic equation between 2 events. The trigger source is one of the fourth comparators of the DWT module, The following events can be monitored:

- Clock cycle matching
- Data address matching

For more informations on the trigger resources refer to *Section 38.13*.

The packets transmitted by the ETM are output to the TPIU (Trace Port Interface Unit). The formatter of the TPIU adds some extra packets (refer to *Section 38.17*) and then outputs the complete packet sequence to the debugger host.

38.15.2 ETM signal protocol and packet types

This part is described in the chapter 7 ETMv3 Signal Protocol of the Arm® IHI 0014N document.

38.15.3 Main ETM registers

For more information on registers refer to the chapter 3 of the Arm® IHI 0014N specification.

Table 309. Main ETM registers

Address	Register	Details
0xE0041FB0	ETM Lock Access	Write 0xC5ACCE55 to unlock the write access to the other ETM registers.
0xE0041000	ETM Control	This register controls the general operation of the ETM, for instance how tracing is enabled.
0xE0041010	ETM Status	This register provides information about the current status of the trace and trigger logic.
0xE0041008	ETM Trigger Event	This register defines the event that will control trigger.
0xE004101C	ETM Trace Enable Control	This register defines which comparator is selected.
0xE0041020	ETM Trace Enable Event	This register defines the trace enabling event.
0xE0041024	ETM Trace Start/Stop	This register defines the traces used by the trigger source to start and stop the trace, respectively.

38.15.4 ETM configuration example

To output a simple value to the TPIU:

- Configure the TPIU and enable the I/IO_TRACEN to assign TRACE I/Os in the STM32F4xx debug configuration register.
- Write 0xC5AC CE55 to the ETM Lock Access Register to unlock the write access to the ITM registers
- Write 0x0000 1D1E to the ETM control register (configure the trace)
- Write 0x0000 406F to the ETM Trigger Event register (define the trigger event)
- Write 0x0000 006F to the ETM Trace Enable Event register (define an event to start/stop)
- Write 0x0200 00000x0000 0001 to the ETM Trace Start/stop register (enable the trace)
- Write 0x0000191E to the ETM Control Register (end of configuration)

38.16 MCU debug component (DBGMCU)

The MCU debug component helps the debugger provide support for:

- Low-power modes
- Clock control for timers, watchdog, I2C and bxCAN during a breakpoint
- Control of the trace pins assignment

38.16.1 Debug support for low-power modes

To enter low-power mode, the instruction WFI or WFE must be executed.

The MCU implements several low-power modes which can either deactivate the CPU clock or reduce the power of the CPU.

The core does not allow FCLK or HCLK to be turned off during a debug session. As these are required for the debugger connection, during a debug, they must remain active. The MCU integrates special means to allow the user to debug software in low-power modes.

For this, the debugger host must first set some debug configuration registers to change the low-power mode behavior:

- In Sleep mode, DBG_SLEEP bit of DBGMCU_CR register must be previously set by the debugger. This will feed HCLK with the same clock that is provided to FCLK (system clock previously configured by the software).
- In Stop mode, the bit DBG_STOP must be previously set by the debugger. This will enable the internal RC oscillator clock to feed FCLK and HCLK in STOP mode.

38.16.2 Debug support for timers, watchdog, bxCAN and I^2C

During a breakpoint, it is necessary to choose how the counter of timers and watchdog should behave:

- They can continue to count inside a breakpoint. This is usually required when a PWM is controlling a motor, for example.
- They can stop to count inside a breakpoint. This is required for watchdog purposes.

For the bxCAN, the user can choose to block the update of the receive register during a breakpoint.

For the I^2C, the user can choose to block the SMBUS timeout during a breakpoint.

For timers having complementary outputs, when the counter is stopped (DBG_TIMx_STOP = 1), the outputs are disabled (as if the MOE bit was reset) for safety purposes.

38.16.3 Debug MCU configuration register

This register allows the configuration of the MCU under DEBUG. This concerns:

- Low-power mode support
- Timer and watchdog counter support
- bxCAN communication support
- Trace pin assignment

This DBGMCU_CR is mapped on the External PPB bus at address 0xE0042004

It is asynchronously reset by the PORESET (and not the system reset). It can be written by the debugger under system reset.

If the debugger host does not support these features, it is still possible for the user software to write to these registers.

DBGMCU_CR register

Address: 0xE004 2004

Only 32-bit access supported

POR Reset: 0x0000 0000 (not reset by system reset)

31	30	29	28	27	26	25	24	23	22	21	20	19	18	17	16
Reserved															
15	14	13	12	11	10	9	8	7	6	5	4	3	2	1	0
Reserved								TRACE_ MODE [1:0]		TRACE _IOEN	Reserved		DBG_ STAND BY	DBG_ STOP	DBG_ SLEEP
								rw	rw	rw			rw	rw	rw

Bits 31:8 Reserved, must be kept at reset value.

Bits 7:5 **TRACE_MODE[1:0] and TRACE_IOEN**: Trace pin assignment control

– With TRACE_IOEN=0:
TRACE_MODE=xx: TRACE pins not assigned (default state)

– With TRACE_IOEN=1:
  – TRACE_MODE=00: TRACE pin assignment for Asynchronous Mode
  – TRACE_MODE=01: TRACE pin assignment for Synchronous Mode with a TRACEDATA size of 1
  – TRACE_MODE=10: TRACE pin assignment for Synchronous Mode with a TRACEDATA size of 2
  – TRACE_MODE=11: TRACE pin assignment for Synchronous Mode with a TRACEDATA size of 4

Bits 4:3 Reserved, must be kept at reset value.

Bit 2 **DBG_STANDBY:** Debug Standby mode

0: (FCLK=Off, HCLK=Off) The whole digital part is unpowered.
From software point of view, exiting from Standby is identical than fetching reset vector (except a few status bit indicated that the MCU is resuming from Standby)
1: (FCLK=On, HCLK=On) In this case, the digital part is not unpowered and FCLK and HCLK are provided by the internal RC oscillator which remains active. In addition, the MCU generate a system reset during Standby mode so that exiting from Standby is identical than fetching from reset

Bit 1 **DBG_STOP:** Debug Stop mode

0: (FCLK=Off, HCLK=Off) In STOP mode, the clock controller disables all clocks (including HCLK and FCLK). When exiting from STOP mode, the clock configuration is identical to the one after RESET (CPU clocked by the 8 MHz internal RC oscillator (HSI)). Consequently, the software must reprogram the clock controller to enable the PLL, the Xtal, etc.
1: (FCLK=On, HCLK=On) In this case, when entering STOP mode, FCLK and HCLK are provided by the internal RC oscillator which remains active in STOP mode. When exiting STOP mode, the software must reprogram the clock controller to enable the PLL, the Xtal, etc. (in the same way it would do in case of DBG_STOP=0)

Bit 0 **DBG_SLEEP:** Debug Sleep mode

0: (FCLK=On, HCLK=Off) In Sleep mode, FCLK is clocked by the system clock as previously configured by the software while HCLK is disabled.
In Sleep mode, the clock controller configuration is not reset and remains in the previously programmed state. Consequently, when exiting from Sleep mode, the software does not need to reconfigure the clock controller.
1: (FCLK=On, HCLK=On) In this case, when entering Sleep mode, HCLK is fed by the same clock that is provided to FCLK (system clock as previously configured by the software).

38.16.4 Debug MCU APB1 freeze register (DBGMCU_APB1_FZ)

The DBGMCU_APB1_FZ register is used to configure the MCU under Debug. It concerns APB1 peripherals. It is mapped on the external PPB bus at address 0xE004 2008.

The register is asynchronously reset by the POR (and not the system reset). It can be written by the debugger under system reset.

Address : 0xE004 2008

Only 32-bits access are supported.

Power-on reset (POR): 0x0000 0000 (not reset by system reset)

31	30	29	28	27	26	25	24	23	22	21	20	19	18	17	16
Reserved					DBG_CAN2_STOP	DBG_CAN1_STOP	Reserved	DBG_I2C3_SMBUS_TIMEOUT	DBG_I2C2_SMBUS_TIMEOUT	DBG_I2C1_SMBUS_TIMEOUT	Reserved				
					rw	rw		rw	rw	rw					

15	14	13	12	11	10	9	8	7	6	5	4	3	2	1	0
Reserved			DBG_IWDG_STOP	DBG_WWDG_STOP	DBG_RTC_STOP	Reserved	DBG_TIM14_STOP	DBG_TIM13_STOP	DBG_TIM12_STOP	DBG_TIM7_STOP	DBG_TIM6_STOP	DBG_TIM5_STOP	DBG_TIM4_STOP	DBG_TIM3_STOP	DBG_TIM2_STOP
				rw	rw		rw	rw	rw	rw	rw	rw	rw	rw	rw

Bits 31:27 Reserved, must be kept at reset value.

Bit 26 **DBG_CAN2_STOP:** Debug CAN2 stopped when Core is halted
0: Same behavior as in normal mode
1: The CAN2 receive registers are frozen

Bit 25 **DBG_CAN1_STOP:** Debug CAN2 stopped when Core is halted
0: Same behavior as in normal mode
1: The CAN2 receive registers are frozen

Bit 24 Reserved, must be kept at reset value.

Bit 23 **DBG_I2C3_SMBUS_TIMEOUT:** SMBUS timeout mode stopped when Core is halted
0: Same behavior as in normal mode
1: The SMBUS timeout is frozen

Bit 22 **DBG_I2C2_SMBUS_TIMEOUT:** SMBUS timeout mode stopped when Core is halted
0: Same behavior as in normal mode
1: The SMBUS timeout is frozen

Bit 21 **DBG_I2C1_SMBUS_TIMEOUT:** SMBUS timeout mode stopped when Core is halted
0: Same behavior as in normal mode
1: The SMBUS timeout is frozen

Bit 20:13 Reserved, must be kept at reset value.

Bit 12 **DBG_IWDG_STOP:** Debug independent watchdog stopped when core is halted
0: The independent watchdog counter clock continues even if the core is halted
1: The independent watchdog counter clock is stopped when the core is halted

Bit 11 **DBG_WWDG_STOP:** Debug Window Watchdog stopped when Core is halted
0: The window watchdog counter clock continues even if the core is halted
1: The window watchdog counter clock is stopped when the core is halted

Bit 10 **DBG_RTC_STOP:** RTC stopped when Core is halted
0: The RTC counter clock continues even if the core is halted
1: The RTC counter clock is stopped when the core is halted

Bit 9 Reserved, must be kept at reset value.

Bits 8:0 **DBG_TIMx_STOP:** TIMx counter stopped when core is halted (x=2..7, 12..14)
0: The clock of the involved timer counter is fed even if the core is halted
1: The clock of the involved timer counter is stopped and the outputs are disabled when the core is halted

38.16.5 Debug MCU APB2 Freeze register (DBGMCU_APB2_FZ)

The DBGMCU_APB2_FZ register is used to configure the MCU under Debug. It concerns APB2 peripherals.

This register is mapped on the external PPB bus at address 0xE004 200C

It is asynchronously reset by the POR (and not the system reset). It can be written by the debugger under system reset.

Address: 0xE004 200C

Only 32-bit access is supported.

POR: 0x0000 0000 (not reset by system reset)

31	30	29	28	27	26	25	24	23	22	21	20	19	18	17	16
Reserved													DBG_TIM11_STOP	DBG_TIM10_STOP	DBG_TIM9_STOP
													rw	rw	rw

15	14	13	12	11	10	9	8	7	6	5	4	3	2	1	0
Reserved														DBG_TIM8_STOP	DBG_TIM1_STOP
														rw	rw

Bits 31:19 Reserved, must be kept at reset value.

Bits 18:16 **DBG_TIMx_STOP:** TIMx counter stopped when core is halted (x=9..11)
0: The clock of the involved timer counter is fed even if the core is halted
1: The clock of the involved timer counter is stopped and the outputs are disabled when the core is halted

Bits 15: Reserved, must be kept at reset value.

Bit 1 **DBG_TIM8_STOP**: TIM8 counter stopped when core is halted

0: The clock of the involved timer counter is fed even if the core is halted

1: The clock of the involved timer counter is stopped and the outputs are disabled when the core is halted

Bit 0 **DBG_TIM1_STOP:** TIM1 counter stopped when core is halted

0: The clock of the involved timer counter is fed even if the core is halted

1: The clock of the involved timer counter is stopped and the outputs are disabled when the core is halted

38.17 TPIU (trace port interface unit)

38.17.1 Introduction

The TPIU acts as a bridge between the on-chip trace data from the ITM and the ETM.

The output data stream encapsulates the trace source ID, that is then captured by a *trace port analyzer* (TPA).

The core embeds a simple TPIU, especially designed for low-cost debug (consisting of a special version of the CoreSight TPIU).

Figure 488. TPIU block diagram

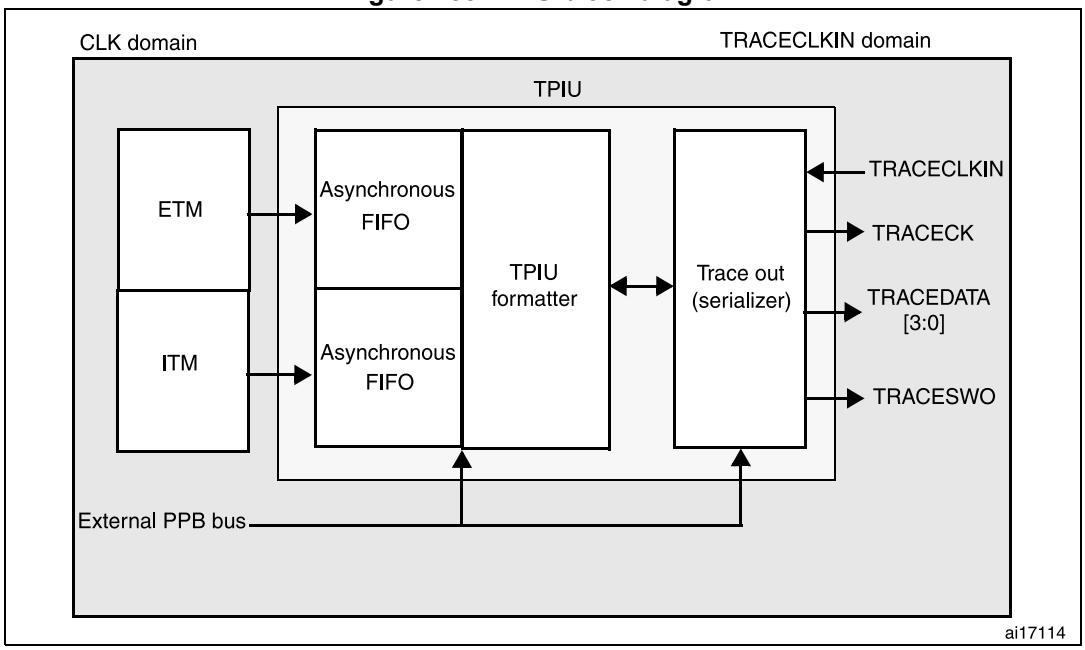

38.17.2 TRACE pin assignment

- Asynchronous mode

  The asynchronous mode requires 1 extra pin and is available on all packages. It is only available if using Serial Wire mode (not in JTAG mode).

Table 310. Asynchronous TRACE pin assignment

TPUI pin name	Trace synchronous mode		STM32F4xx pin assignment
	Type	Description	
TRACESWO	O	TRACE Async Data Output	PB3

- Synchronous mode

  The synchronous mode requires from 2 to 6 extra pins depending on the data trace size and is only available in the larger packages. In addition it is available in JTAG mode and in Serial Wire mode and provides better bandwidth output capabilities than asynchronous trace.

Table 311. Synchronous TRACE pin assignment

TPUI pin name	Trace synchronous mode		STM32F4xxpin assignment
	Type	Description	
TRACECK	O	TRACE Clock	PE2
TRACED[3:0]	O	TRACE Sync Data Outputs Can be 1, 2 or 4.	PE[6:3]

TPUI TRACE pin assignment

By default, these pins are NOT assigned. They can be assigned by setting the TRACE_IOEN and TRACE_MODE bits in the ***MCU Debug component configuration register***. This configuration has to be done by the debugger host.

In addition, the number of pins to assign depends on the trace configuration (asynchronous or synchronous).

- **Asynchronous mode**: 1 extra pin is needed
- **Synchronous mode**: from 2 to 5 extra pins are needed depending on the size of the data trace port register (1, 2 or 4):
  - TRACECK
  - TRACED(0) if port size is configured to 1, 2 or 4
  - TRACED(1) if port size is configured to 2 or 4
  - TRACED(2) if port size is configured to 4
  - TRACED(3) if port size is configured to 4

To assign the TRACE pin, the debugger host must program the bits TRACE_IOEN and TRACE_MODE[1:0] of the Debug MCU configuration Register (DBGMCU_CR). By default the TRACE pins are not assigned.

This register is mapped on the external PPB and is reset by the PORESET (and not by the SYSTEM reset). It can be written by the debugger under SYSTEM reset.

Table 312. Flexible TRACE pin assignment

DBGMCU_CR register		Pins assigned for:	TRACE IO pin assigned					
TRACE _IOEN	TRACE _MODE [1:0]		PB3 /JTDO/ TRACESWO	PE2/ TRACECK	PE3 / TRACED[0]	PE4 / TRACED[1]	PE5 / TRACED[2]	PE6 / TRACED[3]
0	XX	No Trace (default state)	Released (1)	-				
1	00	Asynchronous Trace	TRACESWO	-	-	Released (usable as GPIO)		
1	01	Synchronous Trace 1 bit	Released (1)	TRACECK	TRACED[0]	-	-	-
1	10	Synchronous Trace 2 bit		TRACECK	TRACED[0]	TRACED[1]	-	-
1	11	Synchronous Trace 4 bit		TRACECK	TRACED[0]	TRACED[1]	TRACED[2]	TRACED[3]

1. When Serial Wire mode is used, it is released. But when JTAG is used, it is assigned to JTDO.

Note: By default, the TRACECLKIN input clock of the TPIU is tied to GND. It is assigned to HCLK two clock cycles after the bit TRACE_IOEN has been set.

The debugger must then program the Trace Mode by writing the PROTOCOL[1:0] bits in the SPP_R (Selected Pin Protocol) register of the TPIU.

- PROTOCOL=00: Trace Port Mode (synchronous)
- PROTOCOL=01 or 10: Serial Wire (Manchester or NRZ) Mode (asynchronous mode). Default state is 01

It then also configures the TRACE port size by writing the bits [3:0] in the CPSPS_R (Current Sync Port Size Register) of the TPIU:

- 0x1 for 1 pin (default state)
- 0x2 for 2 pins
- 0x8 for 4 pins

38.17.3 TPUI formatter

The formatter protocol outputs data in 16-byte frames:

- seven bytes of data
- eight bytes of mixed-use bytes consisting of:
  - 1 bit (LSB) to indicate it is a DATA byte (‘0) or an ID byte (‘1).
  - 7 bits (MSB) which can be data or change of source ID trace.
- one byte of auxiliary bits where each bit corresponds to one of the eight mixed-use bytes:
  - if the corresponding byte was a data, this bit gives bit0 of the data.
  - if the corresponding byte was an ID change, this bit indicates when that ID change takes effect.

Note: Refer to the Arm® CoreSight Architecture Specification v1.0 (Arm® IHI 0029B) for further information

38.17.4 TPUI frame synchronization packets

The TPUI can generate two types of synchronization packets:

- The Frame Synchronization packet (or Full Word Synchronization packet)

  It consists of the word: 0x7F_FF_FF_FF (LSB emitted first). This sequence can not occur at any other time provided that the ID source code 0x7F has not been used.

  It is output periodically ***between*** frames.

  In continuous mode, the TPA must discard all these frames once a synchronization frame has been found.
- The Half-Word Synchronization packet

  It consists of the half word: 0x7F_FF (LSB emitted first).

  It is output periodically ***between or within*** frames.

  These packets are only generated in continuous mode and enable the TPA to detect that the TRACE port is in IDLE mode (no TRACE to be captured). When detected by the TPA, it must be discarded.

38.17.5 Transmission of the synchronization frame packet

There is no Synchronization Counter register implemented in the TPIU of the core. Consequently, the synchronization trigger can only be generated by the **DWT**. Refer to the registers DWT Control Register (bits SYNCTAP[11:10]) and the DWT Current PC Sampler Cycle Count Register.

The TPUI Frame synchronization packet (0x7F_FF_FF_FF) is emitted:

- after each TPIU reset release. This reset is synchronously released with the rising edge of the TRACECLKIN clock. This means that this packet is transmitted when the TRACE_IOEN bit in the DBGMCU_CFG register is set. In this case, the word 0x7F_FF_FF_FF is not followed by any formatted packet.
- at each DWT trigger (assuming DWT has been previously configured). Two cases occur:
  - If the bit SYNENA of the ITM is reset, only the word 0x7F_FF_FF_FF is emitted without any formatted stream which follows.
  - If the bit SYNENA of the ITM is set, then the ITM synchronization packets will follow (0x80_00_00_00_00_00), formatted by the TPUI (trace source ID added).

38.17.6 Synchronous mode

The trace data output size can be configured to 4, 2 or 1 pin: TRACED(3:0)

The output clock is output to the debugger (TRACECK)

Here, TRACECLKIN is driven internally and is connected to HCLK only when TRACE is used.

Note: In this synchronous mode, it is not required to provide a stable clock frequency.

The TRACE I/Os (including TRACECK) are driven by the rising edge of TRACLKIN (equal to HCLK). Consequently, the output frequency of TRACECK is equal to HCLK/2.

38.17.7 Asynchronous mode

This is a low cost alternative to output the trace using only 1 pin: this is the asynchronous output pin TRACESWO. Obviously there is a limited bandwidth.

TRACESWO is multiplexed with JTDO when using the SW-DP pin. This way, this functionality is available in all STM32F4xx packages.

This asynchronous mode requires a constant frequency for TRACECLKIN. For the standard UART (NRZ) capture mechanism, 5% accuracy is needed. The Manchester encoded version is tolerant up to 10%.

38.17.8 TRACECLKIN connection inside the STM32F4xx

In the STM32F4xx, this TRACECLKIN input is internally connected to HCLK. This means that when in asynchronous trace mode, the application is restricted to use to time frames where the CPU frequency is stable.

Note: ***Important:*** *when using asynchronous trace: it is important to be aware that:*

The default clock of the STM32F4xx MCUs is the internal RC oscillator. Its frequency under reset is different from the one after reset release. This is because the RC calibration is the default one under system reset and is updated at each system reset release.

Consequently, the trace port analyzer (TPA) should not enable the trace (with the TRACE_IOEN bit) under system reset, because a Synchronization Frame Packet will be issued with a different bit time than trace packets which will be transmitted after reset release.

38.17.9 TPIU registers

The TPIU APB registers can be read and written only if the bit TRCENA of the Debug Exception and Monitor Control Register (DEMCR) is set. Otherwise, the registers are read as zero (the output of this bit enables the PCLK of the TPIU).

Table 313. Important TPIU registers

Address	Register	Description
0xE0040004	Current port size	Allows the trace port size to be selected: Bit 0: Port size = 1 Bit 1: Port size = 2 Bit 2: Port size = 3, not supported Bit 3: Port Size = 4 Only 1 bit must be set. By default, the port size is one bit. (0x00000001)
0xE00400F0	Selected pin protocol	Allows the Trace Port Protocol to be selected: Bit1:0= 00: Sync Trace Port Mode 01: Serial Wire Output - manchester (default value) 10: Serial Wire Output - NRZ 11: reserved

Table 313. Important TPIU registers (continued)

Address	Register	Description
0xE0040304	Formatter and flush control	Bits 31-9 = always ‘0 Bit 8 = TrigIn = always ‘1 to indicate that triggers are indicated Bits 7-4 = always 0 Bits 3-2 = always 0 Bit 1 = EnFCont. In Sync Trace mode (Select_Pin_Protocol register bit1:0=00), this bit is forced to ‘1: the formatter is automatically enabled in continuous mode. In asynchronous mode (Select_Pin_Protocol register bit1:0 <> 00), this bit can be written to activate or not the formatter. Bit 0 = always 0 The resulting default value is 0x102 **Note:** In synchronous mode, because the TRACECTL pin is not mapped outside the chip, the formatter is always enabled in continuous mode -this way the formatter inserts some control packets to identify the source of the trace packets).
0xE0040300	Formatter and flush status	Not used in Cortex®-M4 with FPU, always read as 0x00000008

38.17.10 Example of configuration

- Set the bit TRCENA in the Debug Exception and Monitor Control Register (DEMCR)
- Write the TPIU Current Port Size Register to the desired value (default is 0x1 for a 1-bit port size)
- Write TPIU Formatter and Flush Control Register to 0x102 (default value)
- Write the TPIU Select Pin Protocol to select the sync or async mode. Example: 0x2 for async NRZ mode (UART like)
- Write the DBGMCU control register to 0x20 (bit IO_TRACEN) to assign TRACE I/Os for async mode. A TPIU Sync packet is emitted at this time (FF_FF_FF_7F)
- Configure the ITM and write the ITM Stimulus register to output a value

38.18 DBG register map

The following table summarizes the Debug registers.

Table 314. DBG register map and reset values

Addr.	Register	31	30	29	28	27	26	25	24	23	22	21	20	19	18	17	16	15	14	13	12	11	10	9	8	7	6	5	4	3	2	1	0
0xE004 2000	**DBGMCU _IDCODE**	REV_ID																Reserved				DEV_ID											
	Reset value(1)	X	X	X	X	X	X	X	X	X	X	X	X	X	X	X	X					X	X	X	X	X	X	X	X	X	X	X	X
0xE004 2004	**DBGMCU_CR**	Reserved											DBG_TIM7_STOP	DBG_TIM6_STOP	DBG_TIM5_STOP	DBG_TIM8_STOP	DBG_I2C2_SMBUS_TIMEOUT	Reserved								TRACE_ MODE [1:0]		TRACE_	Reserved		DBG_STANDBY	DBG_STOP	DBG_SLEEP
	Reset value												0	0	0	0	0									0	0	0			0	0	0
0xE004 2008	**DBGMCU_ APB1_FZ**	Reserved					DBG_CAN2_STOP	DBG_CAN1_STOP	Reserved	DBG_I2C3_SMBUS_TIMEOUT	DBG_I2C2_SMBUS_TIMEOUT	DBG_I2C1_SMBUS_TIMEOUT	Reserved								DBG_IWDG_STOP	DBG_WWDG_STOP	Reserved	DBG_RTC_STOP	DBG_TIM14_STOP	DBG_TIM13_STOP	DBG_TIM12_STOP	DBG_TIM7_STOP	DBG_TIM6_STOP	DBG_TIM5_STOP	DBG_TIM4_STOP	DBG_TIM3_STOP	DBG_TIM2_STOP	
	Reset value						0	0	0	0	0	0									0	0		0	0	0	0	0	0	0	0	0	0
0xE004 200C	**DBGMCU_ APB2_FZ**	Reserved													DBG_TIM11_STOP	DBG_TIM10_STOP	DBG_TIM9_STOP	Reserved														DBG_TIM8_STOP	DBG_TIM1_STOP
	Reset value														0	0	0															0	0

1. The reset value is product dependent. For more information, refer to *Section 38.6.1: MCU device ID code*.

39 Device electronic signature

The electronic signature is stored in the Flash memory area. It can be read using the JTAG/SWD or the CPU. It contains factory-programmed identification data that allow the user firmware or other external devices to automatically match its interface to the characteristics of the STM32F4xx microcontrollers.

39.1 Unique device ID register (96 bits)

The unique device identifier is ideally suited:

- for use as serial numbers (for example USB string serial numbers or other end applications)
- for use as security keys in order to increase the security of code in Flash memory while using and combining this unique ID with software cryptographic primitives and protocols before programming the internal Flash memory
- to activate secure boot processes, etc.

The 96-bit unique device identifier provides a reference number which is unique for any device and in any context. These bits can never be altered by the user.

The 96-bit unique device identifier can also be read in single bytes/half-words/words in different ways and then be concatenated using a custom algorithm.

Base address: 0x1FFF 7A10

Address offset: 0x00

Read only = 0xXXXX XXXX where X is factory-programmed

31	30	29	28	27	26	25	24	23	22	21	20	19	18	17	16	15	14	13	12	11	10	9	8	7	6	5	4	3	2	1	0
UID(31:0)																															
r	r	r	r	r	r	r	r	r	r	r	r	r	r	r	r	r	r	r	r	r	r	r	r	r	r	r	r	r	r	r	r

Bits 31:0 **UID(31:0):** unique ID bits

Address offset: 0x04

Read only = 0xXXXX XXXX where X is factory-programmed

31	30	29	28	27	26	25	24	23	22	21	20	19	18	17	16
UID(63:48)															
r	r	r	r	r	r	r	r	r	r	r	r	r	r	r	r
15	14	13	12	11	10	9	8	7	6	5	4	3	2	1	0
UID(47:32)															
r	r	r	r	r	r	r	r	r	r	r	r	r	r	r	r

Bits 31:0 **UID(63:32):** 63:32 unique ID bits

Address offset: 0x08

Read only = 0xXXXX XXXX where X is factory-programmed

31	30	29	28	27	26	25	24	23	22	21	20	19	18	17	16
UID(95:80)															
r	r	r	r	r	r	r	r	r	r	r	r	r	r	r	r
15	14	13	12	11	10	9	8	7	6	5	4	3	2	1	0
UID(79:64)															
r	r	r	r	r	r	r	r	r	r	r	r	r	r	r	r

Bits 31:0 **UID(95:64):** *95*:6 Unique ID bits

39.2 Flash size

Base address: 0x1FFF 7A22

Address offset: 0x00

Read only = 0xXXXX where X is factory-programmed

15	14	13	12	11	10	9	8	7	6	5	4	3	2	1	0
F_SIZE															
r	r	r	r	r	r	r	r	r	r	r	r	r	r	r	r

Bits 15:0 F_ID(15:0): Flash memory size

This bitfield indicates the size of the device Flash memory expressed in Kbytes. As an example, 0x0400 corresponds to 1024 Kbytes.

40 Revision history

Table 315. Document revision history

Date	Version	Changes
15-Sep-2011	1	Initial release.
19-Oct-2012	2	Updated reference documents and added *Table 1: Applicable products* on cover page. **MEMORY**: Updated *Section 2: Memory and bus architecture*. **PWR**: Updated VDDA and VREF+ decoupling capacitor in *Figure 7: Power supply overview*. Updated case of no external battery in *Section 5.1.2: Battery backup domain*. VOSRDY bit changed to read-only in *Section 5.4.3: PWR power control/status register (PWR_CSR)*. Removed VDDA in *Section 5.2.3: Programmable voltage detector (PVD)* and remove VDDA in PVDO bit description (*Section 5.4.3: PWR power control/status register (PWR_CSR)*). **RCC**: Updated *Figure 20: Simplified diagram of the reset circuit* and minimum reset pulse duration guaranteed by pulse generator restricted to internal reset sources. **GPIOs**: Updated *Section 8.3.1: General-purpose I/O (GPIO)*.
		DMA: Updated direct mode description in *Section 10.2: DMA main features*. Updated direct mode description in *Section : Memory-to-peripheral mode*, and *Section 10.3.12: FIFO/: Direct mode*. Updated register access in *Section 10.5: DMA registers*. Modified Stream2 /Channel 2 in *Table 42: DMA1 request mapping*. Added note related to EN bit in *Section 10.5.5: DMA stream x configuration register (DMA_SxCR) (x = 0..7)*. Updated definition of NDT[15:0] bits in *Section 10.5.6: DMA stream x number of data register (DMA_SxNDTR) (x = 0..7)*. **Interrupts**: Updated number of maskable interrupts to 82 in *Section 12.1.1: NVIC featuress*. Updated *Section 12.2: External interrupt/event controller (EXTI)*.

Table 315. Document revision history (continued)

Date	Version	Changes
19-Oct-2012	2 (continued)	**ADC**: Changed ADCCLK frequency to 30 MHz in *Section 13.5: Channel-wise programmable sampling timee*. Added recovery from ADC sequence in *Section 13.8.1: Using the DMA* and *Section 13.8.2: Managing a sequence of conversions without using the DMA*. Updated AWDIE in *Section 13.13.2: ADC control register 1 (ADC_CR1)*. Added read and write access in *Section 13.13: ADC registers*. **Advanced control timers (TIM1 and TIM8):** Updated 16-bit prescaler range in *Section 17.2: TIM1 and TIM8 main features*. Updated OC1 block diagram in *Figure 114: Output stage of capture/compare channel (channel 1 to 3)*. Updated update event generation in *Upcounting mode* and *Downcounting mode* in *Section 17.3.2: Counter modes* and *Section 17.3.3: Repetition counter*. Updated bits that control the dead-time generation in *Section 17.3.11: Complementary outputs and dead-time insertion*. Updated ways to generate a break in *Section 17.3.12: Using the break function*. Changed OCxREF to ETR in the example given in *Section 17.3.13: Clearing the OCxREF signal on an external event* and changed OCREF_CLR to ETRF in *Figure 124: Clearing TIMx OCxREF.* Updated configuration for example of counter operation in encoder interface mode in *Section 17.3.16: Encoder interface mode*. Added register access in *Section 17.4: TIM1 and TIM8 registers*. Changed definition of ARR[15:0] bits in *Section 17.4.12: TIM1 and TIM8 auto-reload register (TIMx_ARR)*. Updated BKE definition in *Section 17.4.18: TIM1 and TIM8 break and dead-time register (TIMx_BDTR)*.

Table 315. Document revision history (continued)

Date	Version	Changes
19-Oct-2012	2 (continued)	**General purpose timers (TIM2 to TIM5):** Removed all references to “repetition counter”. Added *Figure 134: General-purpose timer block diagram*. Updated 16-bit prescaler range in *Section 18.2: TIM2 to TIM5 main features*. External clock mode 2 ETR restricted to TIM2 to TIM4 in *Section 18.3.3: Clock selection* and *Section 18.3.6: PWM input mode*. Updated *Section 18.3.9: PWM mode* and *Section 18.3.11: Clearing the OCxREF signal on an external event*. Updated *Figure 174: Master/Slave timer example* to change ITR1 to ITR0. Updated read and write access to registers in *Section 18.4: TIM2 to TIM5 registerss*. Restored bits 15 to 8 of TIMx_SMCR as well as *Table 98: TIMx internal trigger connection* in *Section 14.4.3*. Removed note 1 related to OC1M bits in *Section 18.4.13: TIMx capture/compare register 1 (TIMx_CCR1)*. Updated TIMx_CCER bit description for TIM2 to TIM5 in *Section 18.4.9: TIMx capture/compare enable register (TIMx_CCER)*. **General purpose timers (TIM9 to TIM14):** Updated 16-bit prescaler range in *Section 19.2.1: TIM9/TIM12 main features* and *Section 19.2.2: TIM10/TIM11 and TIM13/TIM14 main features*. Updated *Figure 181: General-purpose timer block diagram (TIM10/11/13/14))* to remove TRGO trigger controller output. Added register access in *Section 19.4: TIM9 and TIM12 registers* and *Section 19.5: TIM10/11/13/14 registers*. **Basic timers (TIM6 and TIM7):** Removed all references to “repetition counter”. Updated 16-bit prescaler range in *Section 20.2: TIM6 and TIM7 main features*. **HASH**: Updated *Section 25.3.1: Duration of the processing*. **RNG**: Updated *Section 24.1: RNG introduction*.

Table 315. Document revision history (continued)

Date	Version	Changes
19-Oct-2012	2 (continued)	**RTC**: Updated *Figure 237: RTC block diagram*. Added formula to compute fck_apre in *Figure 26.3.1: Clock and prescalers*. Updated *Section 26.3.9: RTC reference clock detection*. Updated *Section : RTC register write protection*. Added RTC_SSR shadow register in *Section 26.3.6: Reading the calendar*. Updated description of DC[4:0] bits in *Section 26.6.7: RTC calibration register (RTC_CALIBR)*. Renamed RTC_BKxR into RTC_BKPxR in *Table 121: RTC register map and reset values*. Added power-on reset value and changed reset value to system reset value in *Section 26.6.11: RTC sub second register (RTC_SSR)*. Updated definition of ALARMOUTTYPE in *Section 26.6.17: RTC tamper and alternate function configuration register (RTC_TAFCR)*. **I2C**: Modified *Section 27.3.8: DMA requests*. Updated bit 14 description in *Section 27.6.3: I^2C Own address register 1 (I2C_OAR1))*. Updated definition of PE bit and note related to SWRST bit; moved note related to STOP bit to the whole register in *Section 27.6.1: I^2C Control register 1 (I2C_CR1)*. **USART:** *Section 30.6.6: Control register 3 (USART_CR3))*: removed notes related to UART5 in DMAT and DMAR description. Updated *TTable 142: Error calculation for programmed baud rates at fPCLK = 42 MHz or fPCLK = 84 Hz, oversampling by 16* and *Table 143: Error calculation for programmed baud rates at fPCLK = 42 MHz or fPCLK = 84 MHz, oversampling by 8*. **SPI/I2S:** Updated *Section 28.1: SPI introduction*. Changed I2S simplex communication/mode to half-duplex communication/mode. Updated flags in reception/transmission modes in *Section 28.2.2: I^2S features*. Added Frame error flag in *Table 128: I^2S interrupt requests*. Added register access in *Section 28.5: SPI and I^2S registers*. Updated ERRIE definition in *Section 28.5.2: SPI control register 2 (SPI_CR2)*. Renamed TIFRFE to FRE and definition updated in *Section 28.5.3: SPI status register (SPI_SR)*.

Table 315. Document revision history (continued)

Date	Version	Changes
19-Oct-2012	2 (continued)	**SDIO:** Updated value and description for bits [45:40] and [7:1] in *Table 176: R4 response*. Updated value at bits [45:40] in *Table 178: R5 response*. **CAN:** Updated *Figure 335: Dual CAN block diagram*. Modified definition of CAN2SB bits in *Section : CAN filter master register (CAN_FMR)*. Added register access in *Section 32.9: CAN registers* **ETHERNET:** Updated standard for precision networked clock synchronization in *Section 33.1: Ethernet introduction* and *Section 33.2.1: MAC core features*. Updated CR bit definition in *Section : Ethernet MAC MII address register (ETH_MACMIIAR)*. Replace RTPR by PM bit in *Table 192: Source address filtering*. **USB OTG FS** Updated remote wakeup signaling bit and the resume interrupt in *Section : Suspended state*. Added peripheral register access in *Section 34.16: OTG_FS control and status registerss*. Updated INEPTXSA description in OTG_FS_DIEPTXFx. Changed PHYSEL from bit 7 to bit 6 of the OTG_FS_GUSBCFG register. **USB OTG HS** Updated remote wakeup signaling bit and the resume interrupt in *Section : Suspended state*. Added peripheral register access in *Section 35.12: OTG_HS control and status registers*. Updated OTG_HS_CID reset value. Updated INEPTXSA description in OTG_HS_DIEPTXFx. Updated FSLSPCS for LS host mode, added PHYSEL in *Section : OTG_HS host configuration register (OTG_HS_HCFG)*. Renamed PHYSEL into PHSEL and changed from bit 7 to bit 6 of the OTG_HS_GUSBCFG register. Updated OTG_HS_DIEPEACHMSK1 and OTG_HS_DOEPEACHMSK1 reset values.

Table 315. Document revision history (continued)

Date	Version	Changes
19-Oct-2012	2 (continued)	**FSMC:** Updated step b) in *Section 36.3.1: Supported memories and transactions*. Updated *Table 196: FSMC_BTRx bit fields*. Changed Clock divide ration min in *Table 246: Programmable NAND/PC Card access parameters*. Updated case of synchronous accesses in *Section 36.5: NOR Flash/PSRAM controller*. Changed minimum value for ADDSET to 0 in *Table 203*, *Table 206*, *Table 207*, *Table 209*, and *Table 210*. Move note from *Figure 437: Mode1 write accesses* and *Figure 436: Mode1 read accesses*. Move note from *Figure 439: ModeA write accesses* to *Figure 438: ModeA read accesses*. Updated *Section : WAIT management in asynchronous accesses*. Added register access in *Section 36.5.6: NOR/PSRAM control registers* and *Section 36.6.2: NAND Flash / PC Card supported memories and transactions*. Removed caution note in *Section 36.6.1: External memory interface signalss*. Updated *Table 249: 16-bit PC Card.* Updated step 3 in *Section 36.6.4: NAND Flash operations*. Updated *Figure 455: Access to non 'CE don't care' NAND-Flash* and note below in *Section 36.6.5: NAND Flash prewait functionality*. Updated access to I/O Space in *Section 36.6.7: PC Card/CompactFlash operationss*. Updated *Table 251: 16-bit PC-Card signals and access type*. Updated BUSTURN bit definition in *Section : SRAM/NOR-Flash chip-select timing registers 1..4 (FSMC_BTR1..4))*. Changed bits 16 to 19 to BUSTURN in *Section : SRAM/NOR-Flash write timing registers 1..4 (FSMC_BWTR1..4)* **DEBUG:** Updated *Section 38.4.3: Internal pull-up and pull-down on JTAG pins*. **Electronic signature** Updated *Section 39: Device electronic signature* introduction. Updated REV_ID[15:0] to add revision Z in *Section 39.1: Unique device ID register (96 bits)*. Updated address and example in *Section 39.2: Flash size*.

Table 315. Document revision history (continued)

Date	Version	Changes
13-Nov-2012	3	Added STM32F42x and STM32F43x devices. Removed reference du Flash programming manual on cover page. Added *Section 2.3.2: Flash memory overview* and *Section 3: Embedded Flash memory interface*. Change RTC_50Hz into RTC_REFIN in *Section 8.3.2: I/O pin multiplexer and mapping*. Modified RTC alternate function naming in *Section 8: General-purpose I/Os (GPIO)* and *Section 26: Real-time clock (RTC)*. Updated max. input frequency in *Section 26.3.1: Clock and prescalers*. Changed bit access type from 'rw' to 'w' and bit description updated in *Section 10.5.3: DMA low interrupt flag clear register (DMA_LIFCR)* and *Section 10.5.4: DMA high interrupt flag clear register (DMA_HIFCR)*. Updated *Figure 18: Frequency measurement with TIM5 in Input capture mode*. Updated *Section : Signals synchronization* in *Section 36: Flexible static memory controller (FSMC)* *Section 34: **USB on-the-go full-speed (OTG_FS)***: updated *Section Figure 389.: USB host-only connection*, *Section : V_{BUS} valid*, and *Section : Host detection of a peripheral connection*. *Section 35: **USB on-the-go high-speed (OTG_HS)***: updated *Section : V_{BUS} valid*, and *Section : Detection of peripheral connection by the host*.

Table 315. Document revision history (continued)

Date	Version	Changes
19-Feb-2013	4	Updated *Section 2: Memory and bus architecture*. Updated *Figure 1: System architecture for STM32F405xx/07xx and STM32F415xx/17xx devices*, and *Figure 1: System architecture for STM32F405xx/07xx and STM32F415xx/17xx devices*. Updated *Table 4: Memory mapping vs. Boot mode/physical remap*. Updated *Figure 5: Sequential 32-bit instruction execution*. removed note 1 from *Table 12: Program/erase parallelism*. PWR: Updated *Figure 7: Power supply overview*. Updated *Section 5.1.3: Voltage regulator*. Added ADCDC1 bit in *Section 5.5.1: PWR power control register (PWR_CR) for STM32F42xxx and STM32F43xxx*. SYSCFG: Added ADCxDC2 bit in *Section 8.2.3: SYSCFG peripheral mode configuration register (SYSCFG_PMC) for STM32F42xxx and STM32F43xxx*. ADC: Updated *Section 13.9.3: Interleaved mode*, *Section 13.9.4: Alternate trigger mode*, and *Section 13.9.5: Combined regular/injected simultaneous mode* to describe case of interrupted conversion. Updated *Section : Temperature sensor, V_{REFINT} and V_{BAT} internal channels*, *Section 13.10: Temperature sensor*, and *Section 13.11: Battery charge monitoring*. RTC: Updated BKP[31:0] bit description in *Section 26.6.20: RTC backup registers (RTC_BKPxR)*. I2C: Updated *Section 27.3.5: Programmable noise filter*.

Table 315. Document revision history (continued)

Date	Version	Changes
19-Feb-2013	4 (continued)	**FSMC**: Updated write FIFO size in *Section 36.1: FSMC main features*. Updated *Figure 434: FSMC block diagram*. Updated *Section 36.5.4: NOR Flash/PSRAM controller asynchronous transactions*. Modified differences between Mode B and mode 1 in *Section : Mode 2/B - NOR Flash*. Modified differences between Mode C and mode 1 in *Section : Mode C - NOR Flash - OE toggling*. Modified differences between Mode D and mode 1 in *Section : Mode D - asynchronous access with extended address*. Updated NWAIT signal in *Figure 449: Asynchronous wait during a read access*, *Figure 450: Asynchronous wait during a write access*, *Figure 451: Wait configurations*, *Figure 452: Synchronous multiplexed read mode - NOR, PSRAM (CRAM)*, and *Figure 453: Synchronous multiplexed write mode - PSRAM (CRAM)*. Updated *Table 195* to *Table 214*. Updated *Section : SRAM/NOR-Flash chip-select control registers 1..4 (FSMC_BCR1..4)*. DEBUG Updated *Figure 485: Block diagram of STM32 MCU and Cortex®-M4 with FPU-level debug support*.

Table 315. Document revision history (continued)

Date	Version	Changes
15-Sep-2013	5	Added STM32F429xx and STM32F439xx part numbers. Replaced FSMC by FMC added Chrom-ART Accelerator, LCD-TFT and SAI interface. Updated *Figure 2: System architecture for STM32F42xxx and STM32F43xxx devices*. PWR: Updated *Section 5.2.2: Brownout reset (BOR)*. Added note related to CSS enabling in Entering Stop mode sections in *Section 5.3.4: Stop mode (STM32F405xx/07xx and STM32F415xx/17xx)* and *Section 5.3.5: Stop mode (STM32F42xxx and STM32F43xxx)*. Updated Stop mode entry in *Table 27* and *Table 29*. Updated WUF bit defienition in PWR_CSR registers. Changed CWUF and CSBF access type to ‘w’ in PWR_CR register. RCC: Updated LSEBYP bit definition in RCC_BDCR register. GPIOs: Updated description of OSPEEDR bits. Removed frequency value in description of OSPEEDR bits.Corrected typos: "IDRy[15:0]" replaced with "IDRy" in "GPIOx_IDR" register, "ODRy[15:0]" replaced with "ODRy" in "GPIOx_ODR" register and "OTy[1:0]" replaced with "OTy" in "GPIOx_OTYPER" register. DCMI: Updated *Section 15.4: DCMI clocks*. IWDG: Corrected *Figure 213: Independent watchdog block diagram*. RTC: Replaced all occurrences of “power-on reset” with “backup domain reset”. Added caution note under *Table 121: RTC register map and reset values*. Changed SHPF bit type to ‘r’ in *Section 26.6.4: RTC initialization and status register (RTC_ISR)*.. SPI: Updated definition of ERRIE bit in *Section 28.5.2: SPI control register 2 (SPI_CR2)*. UART: Updated *Section 30.3.8: LIN (local interconnection network) mode*. Removed note in *Section 30.3.13: Continuous communication using DMA*. ETHERNET: Modified ETH_MACA0HR (and ETH_DMABMR reset values. Updated definitions of TSTS bit in ETH_MACSR, and TSTTR in ETH_PTPTSSR.

Table 315. Document revision history (continued)

Date	Version	Changes
15-Sep-2013	5 (continued)	USB OTG-FS: Removed note related to VDD range limitation below *Figure 387: OTG A-B device connection* and *Figure 388: USB peripheral-only connection*. FSMC: Updated *Table 229*, *Table 232*, *Table 235*, *Table 239*. Replaced all occurences of DATALAT by DATLAT and SRAM/CRAM by SRAM/PSRAM in the whole section. Updated *Section 36.1: FSMC main features*. Changed bits 27 to 20 of FSMC_BWTR1..4 to reserved. Updated *Section 36.6.7: PC Card/CompactFlash operations*. Updated WREN bit in *Table 231*, *Table 232*, *Table 233*, *Table 236*, *Table 239*, *Table 242*, *Table 245*, and *Table 249*. Updated *Section 36.5.4: NOR Flash/PSRAM controller asynchronous transactions*, *Section : SRAM/NOR-Flash chip-select control registers 1..4 (FSMC_BCR1..4)*, *Section : SRAM/NOR-Flash chip-select timing registers 1..4 (FSMC_BTR1..4)* and *Section : SRAM/NOR-Flash write timing registers 1..4 (FSMC_BWTR1..4)*. Updated definition of PWID in *Section : PC Card/NAND Flash control registers 2..4 (FSMC_PCR2..4)*. FMC: Updated TRDC definition in *Section : SDRAM Timing registers 1,2 (FMC_SDTR1,2)*. DEBUG: updated *Figure 487: JTAG TAP connections*.

Table 315. Document revision history (continued)

Date	Version	Changes
03-Feb-2014	6	Added note related to *over-drive mode unavailable in 1.8 to 2.1 V $V_{DD\ ran}$ge in Section 3.5.1: Relation between CPU clock frequency and Flash memory read time.* *Updated maximum CPU frequency in Section 3.5.2: Adaptive real-time memory accelerator (ART Accelerator™).* PWR: Updated Run mode/ over-drive mode in *Section 5.1.4: Voltage regulator for STM32F42xxx and STM32F43xxx*. RCC for STM32F42/43xx: Changed APB1/2 and AHB maximum frequencies.xw GPIOs: Updated *Figure 27: Selecting an alternate function on STM32F42xxx and STM32F43xxx*. DMA: Updated *Section 10.3.7: Pointer incrementation* and *Section 10.3.11: Single and burst transfers*.. INTERRUPTS AND EVENTS: Updated *Table 62: Vector table for STM32F42xxx and STM32F43xxx*. ADC: Updated *Section 13.3.10: Discontinuous mode*/*Section : Regular group*. DCMI: Updated *Section 15.5.2: DCMI physical interface*. LTDC: Updated resolution in note below *Figure 82: LCD-TFT Synchronous timings*. TIM1 and 8: Added note related to IC1F in *Section 17.4.7: TIM1 and TIM8 capture/compare mode register 1 (TIMx_CCMR1)*. TIM2 to 5: Updated note related to IC1F in *Section 18.4.7: TIMx capture/compare mode register 1 (TIMx_CCMR1)*.

Table 315. Document revision history (continued)

Date	Version	Changes
03-Feb-2014	6 (continued)	TIM9 to 14: Updated note related to IC1F in *Section 19.5.5: TIM10/11/13/14 capture/compare mode register 1 (TIMx_CCMR1)*. RTC: Updated *Section 26.3.11: RTC smooth digital calibration*. Changed ALRBIE to ALRBE (bit 9) in *Section 26.6.3: RTC control register (RTC_CR)*. I2C: Introduced Sm (standard mode) and Fm (fast mode) acronyms. FSMC: Updated BUSTURN definition in *Table 245: FSMC_BTRx bit fields*. FMC: Added Mobile LPSDR SDRAM. Updated *Section : SDRAM initialization* and *Section : SDRAM controller read cycle* and *Figure 476: NAND Flash/PC Card controller waveforms for common memory access*. Updated *Section : SRAM/NOR-Flash chip-select control registers 1..4 (FMC_BCR1..4)*, *Section : SRAM/NOR-Flash chip-select timing registers 1..4 (FMC_BTR1..4)*, *Section : SRAM/NOR-Flash write timing registers 1..4 (FMC_BWTR1..4)*, *Section : SDRAM Timing registers 1,2 (FMC_SDTR1,2)* and *Section : SDRAM Refresh Timer register (FMC_SDRTR)*. Removed mention “default valeur after reset” in *Section : Common memory space timing register 2..4 (FMC_PMEM2..4)*, *Section : Attribute memory space timing registers 2..4 (FMC_PATT2..4)*, and *Section : I/O space timing register 4 (FMC_PIO4)*. Updated BUSTURN definition in *Table 288: FMC_BTRx bit fields*. Updated REV_ID bits in *Section 38.6.1: MCU device ID code*..

Table 315. Document revision history (continued)

Date	Version	Changes
15-May-2014	7	**Embedded Flash memory interface:** Updated *Section : Physical remap in STM32F42xxx and STM32F43xxx*. Updated bank 2 selection in *Section 2.4: Boot configuration*. Updated notes related to MERx and SER bits in *Section : Mass Erase*. Updated *Section 3.7.5: Proprietary code readout protection (PCROP)*. Updated FLASH_OPTCR register reset value for STM32F42/43xx in *Section 3.9.10: Flash option control register (FLASH_OPTCR) for STM32F42xxx and STM32F43xxx* and *Section 3.9.11: Flash option control register (FLASH_OPTCR1) for STM32F42xxx and STM32F43xxx*. **RCC (STM32F42/43xx):** Updated PPLN caution note in *Section 6.3.2: RCC PLL configuration register (RCC_PLLCFGR)* **SYSCFG** Updated MEM_MODE in *Section 9.3.1: SYSCFG memory remap register (SYSCFG_MEMRMP)* **LTDC**: Changed resolution do XGA (1024x768) in *Section 16.2: LTDC main features*, *Section 16.4.1: LTDC Global configuration parameters*, and updated *Section 16.7.3: LTDC Active Width Configuration Register (LTDC_AWCR)*. **RTC** Added note in *Section 26.3.14: Calibration clock output*. **TIMER 1/8:** Removed note related to IC1F bits in *Section 17.4.7: TIM1 and TIM8 capture/compare mode register 1 (TIMx_CCMR1)*, **TIM2 to 5:** Replaced IC2S by CC2S. Updated *Figure 161: Output stage of capture/compare channel (channel 1)*. Removed note related to IC1F bits in *Section 18.4.7: TIMx capture/compare mode register 1 (TIMx_CCMR1)*. **TIM9 to 14:** Removed note related to IC1F bits in *Section 19.5.5: TIM10/11/13/14 capture/compare mode register 1 (TIMx_CCMR1)*. **USB OTG-HS:** Updated DSPD definition in *Section : OTG_HS device configuration register (OTG_HS_DCFG)*. **FSMC** Updated DATLAT bits definition in *Section : SRAM/NOR-Flash chip-select timing registers 1..4 (FSMC_BTR1..4)*.

Table 315. Document revision history (continued)

Date	Version	Changes
15-May-2014	7 (continued)	**FMC** Updated *Figure 474: Synchronous multiplexed read mode waveforms - NOR, PSRAM (CRAM)*. Updated DATLAT bits definition in *Section : SRAM/NOR-Flash chip-select timing registers 1..4 (FMC_BTR1..4)*. Updated FMC_BWTRx register address offsets in *Table 297: FMC register map*. **DEBUG** Added revision code ‘3’ in *Section : DBGMCU_IDCODE*.

Table 315. Document revision history (continued)

Date	Version	Changes
14-Oct-2014	8	**Memory and bus architecture:** Updated *Table 3: Memory mapping vs. Boot mode/physical remap in STM32F405xx/07xx and STM32F415xx/17xx* and *Table 4: Memory mapping vs. Boot mode/physical remap in STM32F42xxx and STM32F43xxx*. **RCC (STM32F40/41xx) and RCC (STM32F42/43xx):** Removed all references to Flash programming manual. Changed RCC_AHB1LPENR, RCC_APB1LPENR, RCC_APB2LPENR, RCC_PLLI2SCFGR and RCC_APB2LPENR reset values. Updated access type to “r” for bits 24 to 31 in RCC_CSR. **GPIOs:** Updated *Figure 27: Selecting an alternate function on STM32F42xxx and STM32F43xxx*. **IWDG** Update note in *Table 107: Min/max IWDG timeout period (in ms) at 32 kHz (LSI)*. **CRYPTO and HASH** Removed STM32F405/407xx and STM32F42xx from the whole sections. Removed STM32F405/407xx and STM32F42xx from the whole section. **TIM10/11/13/14** Added TIMx_DIER description in *Section 19.5: TIM10/11/13/14 registers*. **ETHERNET:** Updated *Table 187: Clock range*. **USB OTG FS:** Removed TRDT formula in *Section 34.17.7: Worst case response time* and added *Table 203: TRDT values*. **USB OTG HS:** Removed TRDT formula in *Section 35.13.8: Worst case response time* and added *Table 213: TRDT values*. **FSMC:** Updated EXTMOD definition in *Section : SRAM/NOR-Flash chip-select control registers 1..4 (FSMC_BCR1..4)*. Updated ADDSET definition in *Section : SRAM/NOR-Flash chip-select timing registers 1..4 (FSMC_BTR1..4)* and *Section : SRAM/NOR-Flash write timing registers 1..4 (FSMC_BWTR1..4)*.

Table 315. Document revision history (continued)

Date	Version	Changes
14-Oct-2014	8 (continued)	**FMC**: Modified step 7 in *Section : SDRAM initialization*. Modified SDRAM refresh rate equations and example in *Section : SDRAM Refresh Timer register (FMC_SDRTR)* and updated definition of COUNT bits. Updated EXTMOD definition in *Section : SRAM/NOR-Flash chip-select control registers 1..4 (FMC_BCR1..4)*. Updated ADDSET definition in *Section : SRAM/NOR-Flash chip-select timing registers 1..4 (FMC_BTR1..4)* and *Section : SRAM/NOR-Flash write timing registers 1..4 (FMC_BWTR1..4)*.

Table 315. Document revision history (continued)

Date	Version	Changes
16-Mar-2015	9	**PWR:** Updated *Section 5.1.2: Battery backup domain*. Updated *Table 23: Low-power mode summary* to add Return from ISR as entry condition. Added *Section : Entering low-power mode* and *Section : Exiting low-power mode*. Updated *Section : Entering Sleep mode*, *Section : Exiting Sleep mode*, *Table 24: Sleep-now entry and exit* and *Table 25: Sleep-on-exit entry and exit*. Updated *Section : Entering Stop mode (for STM32F405xx/07xx and STM32F415xx/17xx)*, *Section : Exiting Stop mode (for STM32F405xx/07xx and STM32F415xx/17xx)* and *Table 27: Stop mode entry and exit (for STM32F405xx/07xx and STM32F415xx/17xx)*. Updated *Section : Entering Stop mode (STM32F42xxx and STM32F43xxx)*, *Section : Exiting Stop mode (STM32F42xxx and STM32F43xxx)* and *Table 29: Stop mode entry and exit (STM32F42xxx and STM32F43xxx)*. Updated *Section : Entering Standby mode*, *Section : Exiting Standby mode* and *Table 30: Standby mode entry and exit*. **RCC:** Updated bits 24 to 31 access type in *Section 7.3.21: RCC clock control & status register (RCC_CSR)*. **GPIOs**: Added port A reset value in *Section 8.4.3: GPIO port output speed register (GPIOx_OSPEEDR) (x = A..I/J/K)*. **DMA:** Update FTH[1:0] description in *Section 10.5.10: DMA stream x FIFO control register (DMA_SxFCR) (x = 0..7)*. **TIM2/5**: Register format changed to 32 bits instead of 16 in *Section 18.4.10: TIMx counter (TIMx_CNT)* and *Section 18.4.12: TIMx auto-reload register (TIMx_ARR)*. **TIM9 to 14:** Updated *Table 101: TIMx internal trigger connection* **WWDG:** Updated *Figure 214: Watchdog block diagram* and *Section 22.4: How to program the watchdog timeout*. Updated *Figure 215: Window watchdog timing diagram* **RNG:** Replaced PLL48CLK by RNG_CLK in the whole section.

Table 315. Document revision history (continued)

Date	Version	Changes
16-Mar-2015	9 (continued)	**I2C2:** Updated FREQ[5:0] description in *Section 27.6.2: I^2C Control register 2 (I2C_CR2)*. **USART:** Removed note related to RXNEIE in *Section : Reception using DMA* **FSMC:** Updated *Figure 474: Synchronous multiplexed read mode waveforms - NOR, PSRAM (CRAM)*. **USB OTG FS** Updated *Table 203: TRDT values* **FMC** Updated FMC_NL in *Figure 456: FMC block diagram*. Updated 'Memory wait' and 'Memory data bus high-z' parameters in *Table 289: Programmable NAND Flash/PC Card access parameters*. Updated *Section : Common memory space timing register 2..4 (FMC_PMEM2..4)*. Updated *Figure 476: NAND Flash/PC Card controller waveforms for common memory access*. **DEBUG:** Updated REV_ID[15:0) and JTAG ID code in *Section 38.6.1: MCU device ID code* and *Section 38.6.2: Boundary scan TAP*, respectively

Table 315. Document revision history (continued)

Date	Version	Changes
28-Jul-2015	10	**Embedded Flash memory interface** – Updated *Section 3.7.5: Proprietary code readout protection (PCROP)*, **Power controller (PWR)** – Added the last sentence in Subsection: Entering low-power mode of *Section 5.3: Low-power modes*, – Added the bullet points about the interrupt in mode entry in *Table 24: Sleep-now entry and exit*, *Table 25: Sleep-on-exit entry and exit*, *Table 27: Stop mode entry and exit (for STM32F405xx/07xx and STM32F415xx/17xx)*, *Table 29: Stop mode entry and exit (STM32F42xxx and STM32F43xxx)* – Added the last point to Mode entry, on return from ISR in *Table 30: Standby mode entry and exit*, – Added the note in *Section: Entering sleep mode* in *Section 5.3.3: Sleep mode*. **General-purpose I/Os (GPIO)** – Updated OSPEED[1:0] definition of GPIOx_OSPEEDR register in *Section 8.4.3: GPIO port output speed register (GPIOx_OSPEEDR) (x = A..I/J/K)* **LCD-TFT Controller (LTDC)** – Corrected the bit field for WHSTPOS in the second bullet point in Section: Window in *Section 16.4.2: Layer programmable parameters*. **Advanced-control timers (TIM1&TIM8)** – Added the note in *Section 17.3.20: Timer synchronization*, – Updated ETF[3:0] description in *Section 17.4.3: TIM1 and TIM8 slave mode control register (TIMx_SMCR)*, – Updated IC1F[3:0] description in *Section 17.4.7: TIM1 and TIM8 capture/compare mode register 1 (TIMx_CCMR1)*, – Added the note to MMS2 bit description in *Section 17.4.8: TIM1 and TIM8 capture/compare mode register 2 (TIMx_CCMR2)*, – Added the note to SMS[2:0] bit description in *Section 17.4.3: TIM1 and TIM8 slave mode control register (TIMx_SMCR)*. **General-purpose timers (TIM2 to TIM5)** – Added the note in *Section 18.3.15: Timer synchronization*, – Updated SMS[2:0] description in *Section 18.4.3: TIMx slave mode control register (TIMx_SMCR)*, – Added the note to MMS2 bit description in *Section 18.4.2: TIMx control register 2 (TIMx_CR2)*, – Added the note to SMS[2:0] bit description in *Section 18.4.3: TIMx slave mode control register (TIMx_SMCR)*.

Table 315. Document revision history (continued)

Date	Version	Changes
28-Jul-2015	10 (Continued)	**General-purpose timers (TIM9 to TIM14)** – Added the note in *Section 19.3.12: Timer synchronization (TIM9/12)*, – Added the note to MMS2 bit description, – Added the note to SMS[2:0] bit description in *Section 19.4.2: TIM9/12 slave mode control register (TIMx_SMCR)*. **Window watchdog (WWDG)** – Updated.*Figure 214: Watchdog block diagram* **Controller area network (bxCAN)** – Replaced tCAN with tq, **Flexible static memory controller (FSMC)** – Added the paragraph about Cross boundary page for Cellular RAM 1.5 in *Section 36.5.5: Synchronous transactions*, – Updated MEMHIZx, MEMHOLDx, MEMSETx bit field descriptions for FSMC_PME2..4 register in *Section 36.5.5: Synchronous transactions*, – Updated ATTSET, ATTHOLD, ATTHIZ bit field descriptions for FSMC_PATT2..4 register in *Section 36.5.5: Synchronous transactions*, – Updated IRS and IFS bit descriptions for FMC_SR2..4 in *Section 36.5.5: Synchronous transactions*, – Renamed ADDSET as ADDSET[3:0] and MTYP as MTYP[1:0], – Addition of CPSIZE in FSMC_BCRx bit fields in *Table 226: FSMC_BCRx bit fields*, *Table 228: FSMC_BCRx bit fields*, *Table 231: FSMC_BCRx bit fields*, *Table 234: FSMC_BCRx bit fields*, *Table 237: FSMC_BCRx bit fields*, *Table 240: FSMC_BCRx bit fields*, *Table 242: FSMC_BCRx bit fields*, – Added CPIZE[2:0] in FMC_BCR1...4 registers in ,*Section 36.5.6: NOR/PSRAM control registers* Section NOR/PSRAM control re – Added CPSIZE[2:0] for FMC_BCRx registers in *Section 36.6.9: FSMC register map*.

Table 315. Document revision history (continued)

Date	Version	Changes
28-Jul-2015	10 (Continued)	**Flexible memory controller (FMC)** – Added the paragraph about Cross boundary page for Cellular RAM 1.5 in *Section 37.5.5: Synchronous transactions*, – Updated BUSTURN bit field description for FMC_BTR1..4 register in *Section 37.5.6: NOR/PSRAM controller registers*, – Updated MEMHIZx, MEMHOLDx, MEMSETx bit field descriptions for FMC_PME2..4 register in *Section 37.6.8: NAND Flash/PC Card controller registers*, – Updated ATTSET, ATTHOLD, ATTHIZ bit field descriptions for FMC_PATT2..4 register in *Section 37.6.8: NAND Flash/PC Card controller registers*, – Updated IRS and IFS bit descriptions for FMC_SR2..4 in *Section 37.6.8: NAND Flash/PC Card controller registers*, – Updated the section SDRAM initialization with the last item in the numbered list in *Section 37.7.5: SDRAM controller registers*, – Renamed ADDSET as ADDSET[3:0] and MTYP as MTYP[1:0], – Addition of CPSIZE in *Table 269: FMC_BCRx bit fields*, *Table 271: FMC_BCRx bit fields*, *Table 274: FMC_BCRx bit fields*, *Table 277: FMC_BCRx bit fields*, *Table 280: FMC_BCRx bit fields*, *Table 283: FMC_BCRx bit fields*, *Table 285: FMC_BCRx bit fields*, *Table 287: FMC_BCRx bit fields*, – Added the paragraph about Cross boundary page for Cellular RAM 1.5 in *Section 37.5.5: Synchronous transactions*, – Added CPIZE[2:0] in FMC_BCR1...4 registers in *Section 37.5.6: NOR/PSRAM controller registers*, – Added CPSIZE[2:0] for FMC_BCRx registers in *Section 37.8: FMC register map*.

Table 315. Document revision history (continued)

Date	Version	Changes
20-Oct-2015	11	**Reset and clock controller (RCC)** Updated STM32F405/407/415/417xx *Figure 21: Clock tree*. Updated **General purpuse I/O (GPIOs)** Changed definition of OSPEEDR bits in *Section 8.4.3: GPIO port output speed register (GPIOx_OSPEEDR) (x = A..I/J/K)*. L**CD-TFT display controller (LTDC):** Changed LRDC_IER into LTDC_IER in *Section 16.5: LTDC interrupts*. Updated AHBP[11:0], AAV[11:0 and TOTALW[11:0 in *Table 92: LTDC register map and reset values*. **Controller area network (bxCAN):** Updated *Section 32.3.4: Acceptance filters* and *Section 32.7.4: Identifier filtering*. **Flexible static memory controller (FSMC)** Updated BUSTURN description in *Section : SRAM/NOR-Flash write timing registers 1..4 (FSMC_BWTR1..4)* and *Section : SRAM/NOR-Flash chip-select timing registers 1..4 (FSMC_BTR1..4)* Updated note related to IRS and IFS bits in *Section : FIFO status and interrupt register 2..4 (FSMC_SR2..4)*. **Flexible memory controller (FMC)** Updated paragraph related to the cacheable read FIFO in *Section : SDRAM controller read cycle*. Updated BUSTURN description in *Section : SRAM/NOR-Flash write timing registers 1..4 (FMC_BWTR1..4)* and *Section : SRAM/NOR-Flash chip-select timing registers 1..4 (FMC_BTR1..4)*. Updated note related to IRS and IFS bits in *Section : FIFO status and interrupt register 2..4 (FMC_SR2..4)*. **Real-time clock (RTC2)** Updated WUCKSEL prescaler input in *Figure 237: RTC block diagram*. Updated 3rd step in *Section : Programming the wakeup timer*. Updated WUTWF bit definition in *Section 26.6.4: RTC initialization and status register (RTC_ISR)*.

Table 315. Document revision history (continued)

Date	Version	Changes
17-May-2016	12	**Embedded Flash memory interface** Removed note related to boot from Bank 2 in *Section 2.4: Boot configuration*. Updated notes in *Section 3.7.3: Read protection (RDP)*. Changed number of LATENCY bits in *Section 3.9.2: Flash access control register (FLASH_ACR) for STM32F42xxx and STM32F43xxx* In *Table 9: 1 Mbyte dual bank Flash memory organization (STM32F42xxx and STM32F43xxx)*: updated sector 19 size and option bytes (bank 2) address range. **Power control (PWR)** Removed reference to low-power mode in *Section 5.1.4: Voltage regulator for STM32F42xxx and STM32F43xxx*, *Section : Entering Stop mode (STM32F42xxx and STM32F43xxx)* and *Section : Exiting Stop mode (STM32F42xxx and STM32F43xxx)*. **Analog-to-digital converter (ADC)** Added note related to ADC_HTR and ADC_LTR register programming in *Section 13.13.7: ADC watchdog higher threshold register (ADC_HTR)* and *Section 13.13.8: ADC watchdog lower threshold register (ADC_LTR)*. **Chrom-Art Accelerator™ controller (DMA2D)** Updated *Section 11.3.12: DMA2D transfer control (start, suspend, abort and completion)*. *Section 11.5.8: DMA2D foreground PFC control register (DMA2D_FGPFCCR)*: updated START bit access type *Section 11.5.10: DMA2D background PFC control register (DMA2D_BGPFCCR)*: updated START bit access and description. **LCD-TFT controller (LTDC)** Updated *Section 16.3.2: LTDC reset and clocks*. Modified LCD_DE description in *Table 89: LCD-TFT pins and signal interface*. Modified *Section 16.7.15: LTDC Layerx Window Horizontal Position Configuration Register (LTDC_LxWHPCR) (where x=1..2)* and *Section 16.7.16: LTDC Layerx Window Vertical Position Configuration Register (LTDC_LxWVPCR) (where x=1..2)*. **General-purpose timers (TIM2 to TIM5)** Updated *Section 18.4.11: TIMx prescaler (TIMx_PSC)*. **General-purpose timers (TIM9 to TIM14)** Added OPM bit in *Section 19.5.1: TIM10/11/13/14 control register 1 (TIMx_CR1)*. Updated *Section 19.4.9: TIM9/12 prescaler (TIMx_PSC)* and *Section 19.5.8: TIM10/11/13/14 prescaler (TIMx_PSC)*.

Table 315. Document revision history (continued)

Date	Version	Changes
17-May-2016	12 (continued)	**General-purpose timers (TIM6 and TIM7)** Updated *Section 20.4.7: TIM6 and TIM7 prescaler (TIMx_PSC)*. **Real-time clock (RTC)** Updated conditions for running under System reset in *Section 26.3.7: Resetting the RTC*. Updated *Section 26.3.14: Calibration clock output*. Added note related to TSE in *Section 26.6.3: RTC control register (RTC_CR)*. Updated caution note related to TAMP1TRG in *Section 26.6.17: RTC tamper and alternate function configuration register (RTC_TAFCR)* register. **Universal synchronous asynchronous receiver transmitter (USART)** Replaced all occurrences of nCTS by CTS, nRTS by RTS and SCLK by CK. **Flexible static memory controller (FSMC)** Updated *Section 36.3: AHB interface*. Added note related to the hold phase delay below *Figure 454: NAND/PC Card controller timing for common memory access*. Updated *Section 36.6.5: NAND Flash prewait functionality*. Updated BUSTURN description in *Section : SRAM/NOR-Flash chip-select timing registers 1..4 (FSMC_BTR1..4)*. Updated MEMHOLDx in *Section : Common memory space timing register 2..4 (FSMC_PMEM2..4)* and ATTHOLD in *Section : Attribute memory space timing registers 2..4 (FSMC_PATT2..4)*. **Flexible memory controller (FMC)** Updated *Section 37.3: AHB interface*. Added note related to the hold phase delay below *Figure 476: NAND Flash/PC Card controller waveforms for common memory access*. Updated *Section 37.6.5: NAND Flash prewait functionality*. Updated BUSTURN description in *Section : SRAM/NOR-Flash chip-select timing registers 1..4 (FMC_BTR1..4)*. Updated MEMHOLDx in *Section : Common memory space timing register 2..4 (FMC_PMEM2..4)* and ATTHOLD in *Section : Attribute memory space timing registers 2..4 (FMC_PATT2..4)*. **Debug (DBG)** Updated value to be programmed to the ETM Trace Start/stop register to enable the trace in *Section 38.15.4: ETM configuration example*.

Table 315. Document revision history (continued)

Date	Version	Changes
20-Sep-2016	13	**Analog-to-digital converter (ADC)** Updated DMA mode 1 and DMA mode 3 description in *Section 13.9: Multi ADC mode*. **LCD-TFT controller** Updated values to be programmed to LTDC_SSCR in *Section : Example of Synchronous timings configuration* Updated *Section 16.4.2: Layer programmable parameters/Windowing*. **Advanced-control timers (TIM1 and TIM8)** Updated *Section 17.3.21: Debug mode*. Extended *Section 17.4.20: TIM1 and TIM8 DMA address for full transfer (TIMx_DMAR)* to 32 bits. Updated *Table 95: Output control bits for complementary OCx and OCxN channels with break feature* output state for MOE = 0. Updated *TIM1 and TIM8 auto-reload register (TIMx_ARR)* reset value. Updated TIMx_CCR1/2/3/4 description when CC1 channel is configured as inputs and changed bit access type to rw/ro. **General-purpose timers (TIM2 to TIM5)** Updated *TIMx auto-reload register (TIMx_ARR)* reset value. Updated TIMx_CCR1/2/3/4 description when CC1 channel is configured as inputs and changed bit access type to rw/ro. **General-purpose timers (TIM9 to TIM14)** Updated *TIM9/12 auto-reload register (TIMx_ARR)* and *TIM10/11/13/14 auto-reload register (TIMx_ARR)* reset value. Updated TIMx_CCR1 description when CC1 channel is configured as inputs and changed bit access type to rw/ro. **Basic timers (TIM6 to TIM7)** Updated *TIM6 and TIM7 auto-reload register (TIMx_ARR)*. **Secure digital input/output interface (SDIO)** Updated *Section 31.1: SDIO main features* up to 50 MHz. Updated *Section 31.3: SDIO functional description* SDIO_CK description. Updated note removing 48 MHz in *Section 31.9.1: SDIO power control register (SDIO_POWER)*, *Section 31.9.2: SDI clock control register (SDIO_CLKCR)*, *Section 31.9.4: SDIO command register (SDIO_CMD)* and *Section 31.9.9: SDIO data control register (SDIO_DCTRL)*.

Table 315. Document revision history (continued)

Date	Version	Changes
20-Sep-2016	13 (continued)	**FMC** Update BUSTURN bit description in *Section : SRAM/NOR-Flash chip-select timing registers 1..4 (FMC_BTR1..4)* and *Section : SRAM/NOR-Flash write timing registers 1..4 (FMC_BWTR1..4)*. **Debug support** Specified behavior of timers with complementary outputs in *Section 38.16.2: Debug support for timers, watchdog, bxCAN and I^2C*. Updated DBG_TIMx_STOP bit description in *Section 38.16.4: Debug MCU APB1 freeze register (DBGMCU_APB1_FZ)* and *Section 38.16.4: Debug MCU APB1 freeze register (DBGMCU_APB1_FZ)*. **Electronic signature** Updated *Section 39.1: Unique device ID register (96 bits)*.
21-Apr-2017	14	Updated: – *Section 5.5.2: PWR power control/status register (PWR_CSR) for STM32F42xxx and STM32F43xxx* – *Section 6.3.14: RCC APB2 peripheral clock enable register (RCC_APB2ENR)* – *Section 14.3.5: DAC output voltage* – *Section 38.6.1: MCU device ID code* – *Figure 237: RTC block diagram* Deleted: – *Section 7.3.15: RCC APB2 peripheral clock enable register(RCC_APB2ENR)*
18-Jul-2017	15	Updated: – *Section 3.9.10: Flash option control register (FLASH_OPTCR) for STM32F42xxx and STM32F43xxx* – *OTG_FS USB configuration register (OTG_FS_GUSBCFG)* – *Table 142: Error calculation for programmed baud rates at fPCLK = 42 MHz or fPCLK = 84 Hz, oversampling by 16* and *Table 143: Error calculation for programmed baud rates at fPCLK = 42 MHz or fPCLK = 84 MHz, oversampling by 8*
23-Apr-2018	16	Updated: – *Section 30.6.1: Status register (USART_SR)* – *Section 34.16.4: Device-mode registers* – *Section 34.17.6: Operational model* – *Section 35.12.4: Device-mode registers* – *Section 34: **USB on-the-go full-speed (OTG_FS)*** – *Table 199: Host-mode control and status registers (CSRs)* – *Table 205: OTG_FS register map and reset values* – *Table 210: Device-mode control and status registers* – *Table 215: OTG_HS register map and reset values* Added: – *Figure 412: SOF trigger output to TIM2 ITR1 connection* RXOLNY register changed from SPI_CR2 to SPI_CR1 in *Section 28.3.4: Configuring the SPI for half-duplex communication* and *Unidirectional receive-only procedure (BIDIMODE=0 and RXONLY=1)*

Table 315. Document revision history (continued)

Date	Version	Changes
07-Jun-2018	17	Updated: – *Figure 16: Clock tree* (STM32F42xxx an STM32F43xxx) and *Figure 21: Clock tree* (STM32F405xx/07xx and STM32F415xx/17xx) – *Figure 27: Selecting an alternate function on STM32F42xxx and STM32F43xxx* – *Table 61: Vector table for STM32F405xx/07xx and STM32F415xx/17xx* and *Table 62: Vector table for STM32F42xxx and STM32F43xxx* – *Section 29.17.5: SAI xInterrupt mask register (SAI_xIM) where x is A or B* – *Section 38.6.1: MCU device ID code*
25-Feb-2019	18	***Section 6: Reset and clock control for STM32F42xxx and STM32F43xxx (RCC)*** Updated OTGHSULPILPEN bit description in *RCC AHB1 peripheral clock enable in low power mode register (RCC_AHB1LPENR)* and OTGHSULPIEN bit description in *RCC AHB1 peripheral clock register (RCC_AHB1ENR)*. ***Section 7: Reset and clock control for STM32F405xx/07xx and STM32F415xx/17xx(RCC)***: Updated *RCC APB2 peripheral clock enabled in low power mode register (RCC_APB2LPENR)* reset value. Updated OTGHSULPILPEN bit description in *RCC AHB1 peripheral clock enable in low power mode register (RCC_AHB1LPENR)* and OTGHSULPIEN bit description in *RCC AHB1 peripheral clock enable register (RCC_AHB1ENR)*. ***Section 13: Analog-to-digital converter (ADC)*** Update *Section : Dual ADC mode*. ***Section 17: Advanced-control timers (TIM1 and TIM8)*** Updated *Figure 113: Capture/compare channel 1 main circuit*. ***Figure 19: General-purpose timers (TIM9 to TIM14)*** Updated *Figure 194: Capture/compare channel 1 main circuit*. ***Section 34: USB on-the-go full-speed (OTG_FS)*** Updated *Section : SETUP and OUT data transfers* and Updated *Section : IN data transfers*. Modified *Table 200: Device-mode control and status registers*. ***Section 35: USB on-the-go high-speed (OTG_HS)*** Updated *Table 208: Core global control and status registers (CSRs)* and *Table 210: Device-mode control and status registers*. Updated *Section : OTG_HS device IN endpoint transmit FIFO size register (OTG_HS_DIEPTXFx) (x = 1..5, where x is the FIFO_number)*, *Section : OTG device endpoint-x control register (OTG_HS_DIEPCTLx) (x = 0..5, where x = Endpoint_number)*, *Section : OTG_HS device endpoint-x control register (OTG_HS_DOEPCTLx) (x = 1..5, where x = Endpoint_number)*, *Section : OTG_HS device endpoint-x interrupt register (OTG_HS_DIEPINTx) (x = 0..5, where x = Endpoint_number)*, *Section : OTG_HS device endpoint-x interrupt register (OTG_HS_DOEPINTx) (x = 0..5, where x = Endpoint_number)*, *Section : OTG_HS device endpoint-x DMA address register (OTG_HS_DIEPDMAx / OTG_HS_DOEPDMAx) (x = 0..5, where x = Endpoint_number)*. Updated *Section : SETUP and OUT data transfers* and *Section : IN data transfers*. ***Section 38: Debug support (DBG)*** Updated REV_ID in *DBGMCU_CR register*.

Index

A

ADC_CCR 427
ADC_CDR 430
ADC_CR1 416
ADC_CR2 418
ADC_CSR 426
ADC_DR 425
ADC_HTR 421
ADC_JDRx 425
ADC_JOFRx 421
ADC_JSQR 424
ADC_LTR 422
ADC_SMPR1 420
ADC_SMPR2 420
ADC_SQR1 422
ADC_SQR2 423
ADC_SQR3 423
ADC_SR 415

C

CAN_BTR 1106
CAN_ESR 1105
CAN_FA1R 1116
CAN_FFA1R 1116
CAN_FiRx 1117
CAN_FM1R 1115
CAN_FMR 1114
CAN_FS1R 1115
CAN_IER 1103
CAN_MCR 1097
CAN_MSR 1099
CAN_RDHxR 1113
CAN_RDLxR 1113
CAN_RDTxR 1112
CAN_RF0R 1102
CAN_RF1R 1103
CAN_RIxR 1111
CAN_TDHxR 1110
CAN_TDLxR 1110
CAN_TDTxR 1109
CAN_TIxR 1108
CAN_TSR 1100
CRC_DR 114
CRC_IDR 114
CRYP_CR 748, 750
CRYP_DIN 754
CRYP_DMACR 756
CRYP_DOUT 755
CRYP_IMSCR 756
CRYP_IV0LR 760
CRYP_IV0RR 760
CRYP_IV1LR 761
CRYP_IV1RR 761
CRYP_K0LR 758
CRYP_K0RR 758
CRYP_K1LR 759
CRYP_K1RR 759
CRYP_K2LR 759
CRYP_K2RR 759
CRYP_K3LR 759
CRYP_K3RR 760
CRYP_MISR 757
CRYP_RISR 757
CRYP_SR 753

D

DAC_CR 445
DAC_DHR12L1 449
DAC_DHR12L2 450
DAC_DHR12LD 451
DAC_DHR12R1 448
DAC_DHR12R2 450
DAC_DHR12RD 451
DAC_DHR8R1 449
DAC_DHR8R2 450
DAC_DHR8RD 452
DAC_DOR1 452
DAC_DOR2 452
DAC_SR 453
DAC_SWTRIGR 448
DBGMCU_APB1_FZ 1705
DBGMCU_APB2_FZ 1706
DBGMCU_CR 1703
DBGMCU_IDCODE 1690
DCMI_CR 467
DCMI_CWSIZE 477
DCMI_CWSTRT 477
DCMI_DR 478
DCMI_ESCR 475
DCMI_ESUR 476
DCMI_ICR 474
DCMI_IER 472
DCMI_MIS 473
DCMI_RIS 471
DCMI_SR 470

DMA_HIFCR 327
DMA_HISR 326
DMA_LIFCR 327
DMA_LISR 325
DMA_SxCR 328
DMA_SxFCR 333
DMA_SxM0AR 332
DMA_SxM1AR 332
DMA_SxNDTR 331
DMA_SxPAR 332

E

ETH_DMABMR 1223
ETH_DMACHRBAR 1236
ETH_DMACHRDR 1235
ETH_DMACHTBAR 1235
ETH_DMACHTDR 1235
ETH_DMAIER 1232
ETH_DMAMFBOCR 1234
ETH_DMAOMR 1229
ETH_DMARDLAR 1225
ETH_DMARPDR 1225
ETH_DMARSWTR 1234
ETH_DMASR 1226
ETH_DMATDLAR 1226
ETH_DMATPDR 1224
ETH_MACA0HR 1205
ETH_MACA0LR 1206
ETH_MACA1HR 1206
ETH_MACA1LR 1207
ETH_MACA2HR 1207
ETH_MACA2LR 1208
ETH_MACA3HR 1209
ETH_MACA3LR 1209
ETH_MACCR 1191
ETH_MACDBGR 1202
ETH_MACFCR 1198
ETH_MACFFR 1194
ETH_MACHTHR 1195
ETH_MACHTLR 1196
ETH_MACIMR 1205
ETH_MACMIIAR 1196
ETH_MACMIIDR 1197
ETH_MACPMTCSR 1201
ETH_MACRWUFFR 1200
ETH_MACSR 1204
ETH_MACVLANTR 1199
ETH_MMCCR 1210
ETH_MMCRFAECR 1215
ETH_MMCRFCECR 1214
ETH_MMCRGUFCR 1215
ETH_MMCRIMR 1212
ETH_MMCRIR 1210
ETH_MMCTGFCR 1214
ETH_MMCTGFMSCCR 1214
ETH_MMCTGFSCCR 1213
ETH_MMCTIMR 1213
ETH_MMCTIR 1211
ETH_PTPPPSCR 1222
ETH_PTPSSIR 1218
ETH_PTPTSAR 1220
ETH_PTPTSCR 1215
ETH_PTPTSHR 1218
ETH_PTPTSHUR 1219
ETH_PTPTSLR 1219
ETH_PTPTSLUR 1220
ETH_PTPTSSR 1221
ETH_PTPTTHR 1221
ETH_PTPTTLR 1221
EXTI_EMR 384
EXTI_FTSR 385
EXTI_IMR 384
EXTI_PR 386
EXTI_RTSR 385
EXTI_SWIER 386

F

FLITF_FCR 103, 105
FLITF_FKEYR 100
FLITF_FOPTCR 106, 108, 110
FLITF_FOPTKEYR 100
FLITF_FSR 101-102
FSMC_BCR1..4 . . . . . 1577, 1640
FSMC_BTR1..4 . . . . . 1580, 1642
FSMC_BWTR1..4 . . . . . 1583, 1646
FSMC_PCR2..4 1593
FSMC_PMEM2..4 1595
FSMC_SR2..4 1594

G

GPIOx_AFRH 286
GPIOx_AFRL 285
GPIOx_BSRR 284
GPIOx_IDR 283
GPIOx_LCKR 284
GPIOx_MODER 281
GPIOx_ODR 283
GPIOx_OSPEEDR 282
GPIOx_OTYPER 281
GPIOx_PUPDR 282

H

HASH_CR 782, 785
HASH_CSRx 794
HASH_DIN 788
HASH_HR0 790
HASH_HR1 790-791
HASH_HR2 790-791
HASH_HR3 791
HASH_HR4 791
HASH_IMR 792
HASH_SR 793
HASH_STR 789

I

I2C_CCR 870
I2C_CR1 860
I2C_CR2 862
I2C_DR 865
I2C_OAR1 864
I2C_OAR2 864
I2C_SR1 865
I2C_SR2 868
I2C_TRISE 871
IWDG_KR 710
IWDG_PR 710
IWDG_RLR 711
IWDG_SR 711

O

OTG_FS_CID 1290
OTG_FS_DAINT 1307
OTG_FS_DAINTMSK 1308
OTG_FS_DCFG 1302
OTG_FS_DCTL 1303
OTG_FS_DIEPCTL0 1309
OTG_FS_DIEPCTLx 1311
OTG_FS_DIEPEMPMSK 1309
OTG_FS_DIEPINTx 1318
OTG_FS_DIEPMSK 1305
OTG_FS_DIEPTSIZ0 1320
OTG_FS_DIEPTSIZx 1323
OTG_FS_DIEPTXF0 1288
OTG_FS_DIEPTXFx 1291
OTG_FS_DOEPCTL0 1314
OTG_FS_DOEPCTLx 1315
OTG_FS_DOEPINTx 1319
OTG_FS_DOEPMSK 1306
OTG_FS_DOEPTSIZ0 1322
OTG_FS_DOEPTSIZx 1324
OTG_FS_DSTS 1304
OTG_FS_DTXFSTSx 1324
OTG_FS_DVBUSDIS 1308
OTG_FS_DVBUSPULSE 1308
OTG_FS_GAHBCFG 1274
OTG_FS_GCCFG 1289
OTG_FS_GINTMSK 1283
OTG_FS_GINTSTS 1279
OTG_FS_GOTGCTL 1271
OTG_FS_GOTGINT 1272
OTG_FS_GRSTCTL 1277
OTG_FS_GRXFSIZ 1287
OTG_FS_GRXSTSP 1286
OTG_FS_GRXSTSR 1286
OTG_FS_GUSBCFG 1275
OTG_FS_HAINT 1294
OTG_FS_HAINTMSK 1295
OTG_FS_HCCHARx 1298
OTG_FS_HCFG 1292
OTG_FS_HCINTMSKx 1300
OTG_FS_HCINTx 1299
OTG_FS_HCTSIZx 1301
OTG_FS_HFIR 1292
OTG_FS_HFNUM 1293
OTG_FS_HNPTXFSIZ 1288
OTG_FS_HNPTXSTS 1288
OTG_FS_HPRT 1295
OTG_FS_HPTXFSIZ 1291
OTG_FS_HPTXSTS 1293
OTG_FS_PCGCCTL 1325
OTG_HS_CID 1429
OTG_HS_DAINT 1450
OTG_HS_DAINTMSK 1451
OTG_HS_DCFG 1443
OTG_HS_DCTL 1445
OTG_HS_DEACHINT 1454
OTG_HS_DEACHINTMSK 1455
OTG_HS_DIEPCTLx 1457
OTG_HS_DIEPDMAx 1471
OTG_HS_DIEPEACHMSK1 1455
OTG_HS_DIEPEMPMSK 1454
OTG_HS_DIEPINTx 1464
OTG_HS_DIEPMSK 1448
OTG_HS_DIEPTSIZ0 1467
OTG_HS_DIEPTSIZx 1469
OTG_HS_DIEPTXFx 1430
OTG_HS_DOEPCTL0 1460
OTG_HS_DOEPCTLx 1461
OTG_HS_DOEPDMAx 1471
OTG_HS_DOEPEACHMSK1 1456
OTG_HS_DOEPINTx 1466
OTG_HS_DOEPMSK 1449
OTG_HS_DOEPTSIZ0 1468

OTG_HS_DOEPTSIZx 1470
OTG_HS_DSTS 1447
OTG_HS_DTHRCTL 1453
OTG_HS_DTXFSTSx 1470
OTG_HS_DVBUSDIS 1451
OTG_HS_DVBUSPULSE 1452
OTG_HS_GAHBCFG 1411
OTG_HS_GCCFG 1428
OTG_HS_GINTMSK 1422
OTG_HS_GINTSTS 1418
OTG_HS_GNPTXFSIZ 1427
OTG_HS_GNPTXSTS 1427
OTG_HS_GOTGCTL 1408
OTG_HS_GOTGINT 1409
OTG_HS_GRSTCTL 1415
OTG_HS_GRXFSIZ 1426
OTG_HS_GRXSTSP 1425
OTG_HS_GRXSTSR 1425
OTG_HS_GUSBCFG 1412
OTG_HS_HAINT 1434
OTG_HS_HAINTMSK 1434
OTG_HS_HCCHARx 1437
OTG_HS_HCDMAx 1443
OTG_HS_HCFG 1430
OTG_HS_HCINTMSKx 1441
OTG_HS_HCINTx 1440
OTG_HS_HCSPLTx 1439
OTG_HS_HCTSIZx 1442
OTG_HS_HFIR 1432
OTG_HS_HFNUM 1432
OTG_HS_HPRT 1435
OTG_HS_HPTXFSIZ 1429
OTG_HS_HPTXSTS 1433
OTG_HS_PCGCCTL 1472
OTG_HS_TX0FSIZ 1427

P

PWR_CR 141, 144
PWR_CSR 142, 147

R

RCC_AHB1ENR 180, 242
RCC_AHB1LPENR 189, 250
RCC_AHB1RSTR 170, 233
RCC_AHB2ENR 182, 244
RCC_AHB2LPENR 192, 252
RCC_AHB2RSTR 173, 236
RCC_AHB3ENR 183, 245
RCC_AHB3LPENR 193, 253
RCC_AHB3RSTR 174, 237
RCC_APB1ENR 183, 245
RCC_APB1LPENR 193, 254
RCC_APB1RSTR 174, 237
RCC_APB2ENR 187, 248
RCC_APB2LPENR 197, 257
RCC_APB2RSTR 178, 240
RCC_BDCR 199, 259
RCC_CFGR 165, 228
RCC_CIR 167, 230
RCC_CR 161, 224
RCC_CSR 200, 260
RCC_PLLCFGR 163, 203, 206, 226, 263
RCC_SSCGR 202, 262
RNG_CR 769
RNG_DR 770
RNG_SR 769
RTC_ALRMAR 825
RTC_ALRMBR 826
RTC_ALRMBSSR 835
RTC_BKxR 836
RTC_CALIBR 824
RTC_CALR 830
RTC_CR 818
RTC_DR 817
RTC_ISR 820
RTC_PRER 823
RTC_SHIFTR 828
RTC_SSR 827
RTC_TR 816
RTC_TSDR 829
RTC_TSSSR 830
RTC_TSTR 828
RTC_WPR 827
RTC_WUTR 823

S

SDIO_CLKCR 1061
SDIO_DCOUNT 1067
SDIO_DCTRL 1066
SDIO_DLEN 1065
SDIO_DTIMER 1064
SDIO_FIFO 1074
SDIO_FIFOCNT 1073
SDIO_ICR 1069
SDIO_MASK 1071
SDIO_POWER 1060
SDIO_RESPCMD 1063
SDIO_RESPx 1064
SDIO_STA 1068
SPI_CR1 916
SPI_CR2 918
SPI_CRCPR 921

SPI_DR 920
SPI_I2SCFGR 922
SPI_I2SPR 923
SPI_RXCRCR 921
SPI_SR 919
SPI_TXCRCR 922
SYSCFG_EXTICR1 . . . . . .291, 297
SYSCFG_EXTICR2 . . . . . .291, 298
SYSCFG_EXTICR3 . . . . . .292, 298
SYSCFG_EXTICR4 . . . . . .293, 299
SYSCFG_MEMRMP 289, 294

T

TIM2_OR 647
TIM5_OR 647
TIMx_ARR 642, 682, 692, 706
TIMx_BDTR 583
TIMx_CCER 576, 640, 681, 691
TIMx_CCMR1 . . . . . 572, 636, 678, 688
TIMx_CCMR2 . . . . . .575, 639
TIMx_CCR1 . . . . . 581, 643, 683, 693
TIMx_CCR2 . . . . . 582, 643, 683
TIMx_CCR3 . . . . . .582, 644
TIMx_CCR4 . . . . . .583, 644
TIMx_CNT 580, 642, 682, 692, 705
TIMx_CR1 . . . . . 561, 627, 672, 686, 702
TIMx_CR2 . . . . . 562, 629, 704
TIMx_DCR 585, 645
TIMx_DIER 567, 632, 674, 687, 704
TIMx_DMAR 586, 646
TIMx_EGR 570, 635, 677, 688, 705
TIMx_PSC 580, 642, 682, 692, 706
TIMx_RCR 581
TIMx_SMCR 565, 630, 673
TIMx_SR 569, 633, 676, 687, 705

U

USART_BRR 1010
USART_CR1 1010
USART_CR2 1013
USART_CR3 1014
USART_DR 1010
USART_GTPR 1017
USART_SR 1007

W

WWDG_CFR 718
WWDG_CR 717
WWDG_SR 718

IMPORTANT NOTICE – PLEASE READ CAREFULLY

STMicroelectronics NV and its subsidiaries (“ST”) reserve the right to make changes, corrections, enhancements, modifications, and improvements to ST products and/or to this document at any time without notice. Purchasers should obtain the latest relevant information on ST products before placing orders. ST products are sold pursuant to ST’s terms and conditions of sale in place at the time of order acknowledgement.

Purchasers are solely responsible for the choice, selection, and use of ST products and ST assumes no liability for application assistance or the design of Purchasers’ products.

No license, express or implied, to any intellectual property right is granted by ST herein.

Resale of ST products with provisions different from the information set forth herein shall void any warranty granted by ST for such product.

ST and the ST logo are trademarks of ST. All other product or service names are the property of their respective owners.

Information in this document supersedes and replaces information previously supplied in any prior versions of this document.

© 2019 STMicroelectronics – All rights reserved