STL7N60M2

N-channel 600 V, 0.92 Ω typ., 5 A MDmesh™ M2 Power MOSFET in a PowerFLAT™ 5x5 package

Datasheet - production data

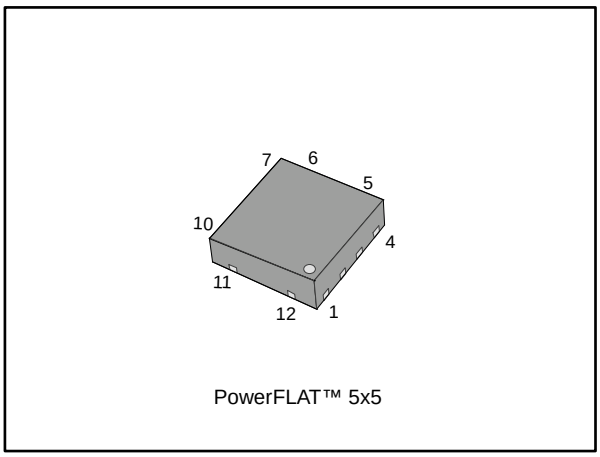

PowerFLAT™ 5x5

Figure 1: Internal schematic diagram

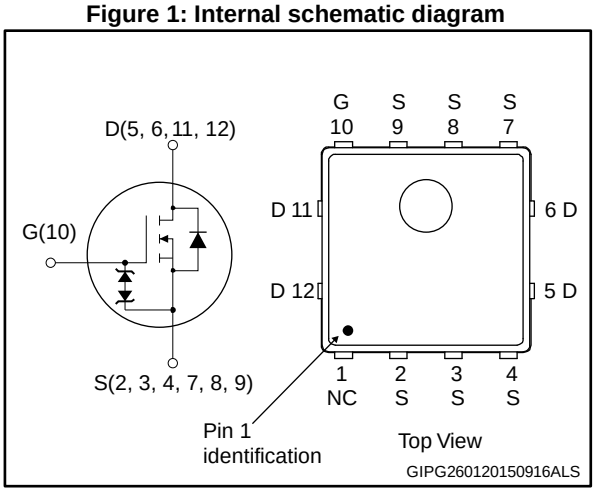

Features

Order code	V_{DS} @ Tjmax	$R_{DS(on)}$ max	I_D
STL7N60M2	650 V	1.05 Ω	5 A

- Extremely low gate charge
- Excellent output capacitance (C_{OSS}) profile
- 100% avalanche tested
- Zener-protected

Applications

- Switching applications

Description

This device is an N-channel Power MOSFET developed using MDmesh™ M2 technology. Thanks to its strip layout and an improved vertical structure, the device exhibits low on-resistance and optimized switching characteristics, rendering it suitable for the most demanding high efficiency converters.

Table 1: Device summary

Order code	Marking	Package	Packaging
STL7N60M2	7N60M2	PowerFLAT 5x5	Tape and reel

This is information on a product in full production.

Contents

1 Electrical ratings 3
2 Electrical characteristics 4
2.2 Electrical characteristics (curves) 6
3 Test circuits 8
4 Package mechanical data 9
4.1 Package mechanical data 10
5 Revision history 12

1 Electrical ratings

Table 2: Absolute maximum ratings

Symbol	Parameter	Value	Unit
V_{GS}	Gate-source voltage	± 25	V
I_D	Drain current (continuous) at T_C = 25 °C	5	A
I_D	Drain current (continuous) at T_C = 100 °C	3.2	A
I_{DM} (1)	Drain current (pulsed)	20	A
I_D (2)	Drain current (continuous) at T_{pcb} = 25 °C	1.2	A
I_D (2)	Drain current (continuous) at T_{pcb} = 100 °C	0.8	A
I_{DM} (1)(2)	Drain current (pulsed)	4.8	A
P_{TOT}	Total dissipation at T_C = 25 °C	67	W
P_{TOT} (2)	Total dissipation at T_{pcb} = 25 °C	4	W
dv/dt (3)	Peak diode recovery voltage slope	15	V/ns
dv/dt (4)	MOSFET dv/dt ruggedness	50	V/ns
T_{stg}	Storage temperature	- 55 to 150	°C
T_j	Max. operating junction temperature	150	°C

Notes:

(1)Pulse width limited by safe operating area.

(2)When mounted on FR-4 Board of 1 inch², 2 oz Cu (t < 10 s)

(3)I_{SD} ≤ 5 A, di/dt ≤ 400 A/µs; $V_{DS\ peak}$ < $V_{(BR)DSS}$, V_{DD} = 400 V.

(4)V_{DS} ≤ 480 V

Table 3: Thermal data

Symbol	Parameter	Value	Unit
$R_{thj\text{-}case}$	Thermal resistance junction-case max	0.83	°C/W
$R_{thj\text{-}pcb}$	Thermal resistance junction-pcb max	31.3	°C/W

Table 4: Avalanche characteristics

Symbol	Parameter	Value	Unit
I_{AR}	Avalanche current, repetitive or not repetitive (pulse width limited by T_{jmax})	1	A
E_{AS}	Single pulse avalanche energy (starting T_j = 25 °C, I_D = I_{AR}; V_{DD} = 50 V)	80	mJ

2 Electrical characteristics

T_C = 25 °C unless otherwise specified

Table 5: On/off states

Symbol	Parameter	Test conditions	Min.	Typ.	Max.	Unit
$V_{(BR)DSS}$	Drain-source breakdown voltage	V_{GS} = 0 V, I_D = 1 mA	600			V
I_{DSS}	Zero gate voltage Drain current	V_{GS} = 0 V, V_{DS} = 600 V			1	µA
		V_{GS} = 0 V, V_{DS} = 600 V, T_C = 125 °C			100	µA
I_{GSS}	Gate-body leakage current	V_{DS} = 0 V, V_{GS} = ±25 V			±10	µA
$V_{GS(th)}$	Gate threshold voltage	V_{DS} = V_{GS}, I_D = 250 µA	2	3	4	V
$R_{DS(on)}$	Static drain-source on-resistance	V_{GS} = 10 V, I_D = 2 A		0.92	1.05	Ω

Table 6: Dynamic

Symbol	Parameter	Test conditions	Min.	Typ.	Max.	Unit
C_{iss}	Input capacitance	V_{DS}= 100 V, f = 1 MHz, V_{GS} = 0 V	-	271	-	pF
C_{oss}	Output capacitance		-	15.7	-	pF
C_{rss}	Reverse transfer capacitance		-	0.68	-	pF
$C_{oss\ eq.}$ (1)	Equivalent output capacitance	V_{DS} = 0 to 480 V, V_{GS} = 0 V	-	75.5	-	pF
R_G	Intrinsic gate resistance	f = 1 MHz, I_D = 0 A	-	7.2	-	Ω
Q_g	Total gate charge	V_{DD} = 480 V, I_D = 5 A, V_{GS} = 10 V (see *Figure 15: "Gate charge test circuit"*)	-	8.8	-	nC
Q_{gs}	Gate-source charge		-	1.8	-	nC
Q_{gd}	Gate-drain charge		-	4.3	-	nC

Notes:

(1)$C_{oss\ eq.}$ is defined as a constant equivalent capacitance giving the same charging time as C_{oss} when V_{DS} increases from 0 to 80% V_{DSS}

Table 7: Switching times

Symbol	Parameter	Test conditions	Min.	Typ.	Max.	Unit
$t_{d(on)}$	Turn-on delay time	V_{DD} = 300 V, I_D = 2.5 A R_G = 4.7 Ω, V_{GS} = 10 V (see *Figure 14: "Switching times test circuit for resistive load"* and *Figure 19: "Switching time waveform"*)	-	7.6	-	ns
t_r	Rise time		-	7.2	-	ns
$t_{d(off)}$	Turn-off-delay time		-	19.3	-	ns
t_f	Fall time		-	15.9	-	ns

Table 8: Source drain diode

Symbol	Parameter	Test conditions	Min.	Typ.	Max.	Unit
I_{SD}	Source-drain current		-		5	A
I_{SDM} (1)	Source-drain current (pulsed)		-		20	A
V_{SD} (2)	Forward on voltage	V_{GS} = 0 V, I_{SD} = 5 A	-		1.6	V
t_{rr}	Reverse recovery time	I_{SD} = 5 A, di/dt = 100 A/µs, V_{DD} = 60 V (see *Figure 19: "Switching time waveform"*)	-	275		ns
Q_{rr}	Reverse recovery charge		-	1.55		µC
I_{RRM}	Reverse recovery current		-	11		A
t_{rr}	Reverse recovery time	I_{SD} = 5 A, di/dt = 100 A/µs, V_{DD} = 60 V, T_j = 150 °C (see *Figure 19: "Switching time waveform"*)	-	376		ns
Q_{rr}	Reverse recovery charge		-	2.1		µC
I_{RRM}	Reverse recovery current		-	11		A

Notes:

(1)Pulse width is limited by safe operating area

(2)Pulsed: pulse duration = 300 µs, duty cycle 1.5%

2.2 Electrical characteristics (curves)

Figure 2: Safe operating area

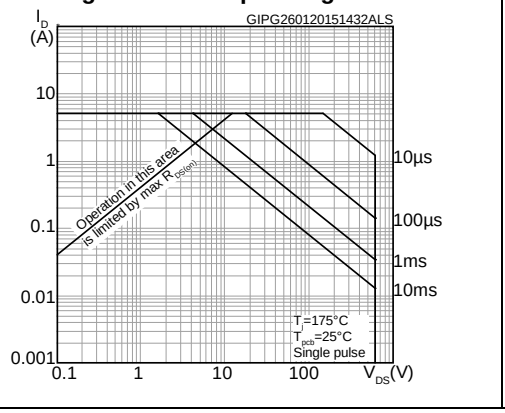

Figure 3: Thermal impedance

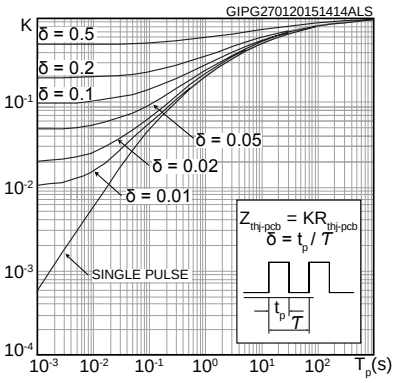

Figure 4: Output characteristics

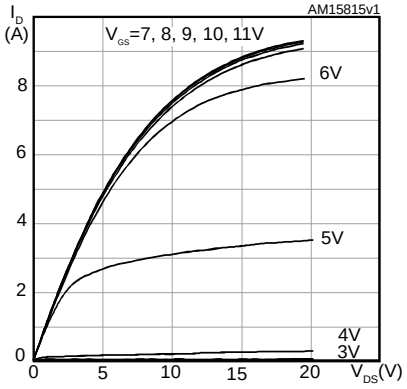

Figure 5: Transfer characteristics

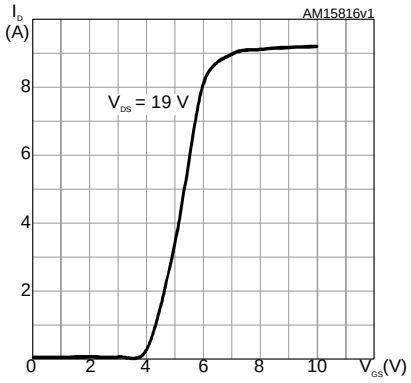

Figure 6: Gate charge vs gate-source voltage

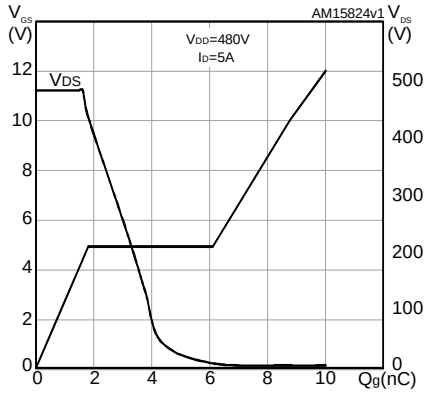

Figure 7: Static drain-source on-resistance

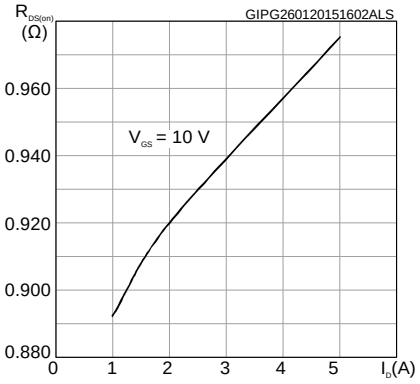

Figure 8: Capacitance variations

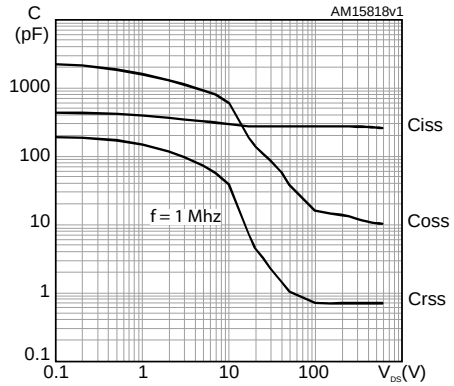

Figure 9: Output capacitance stored energy

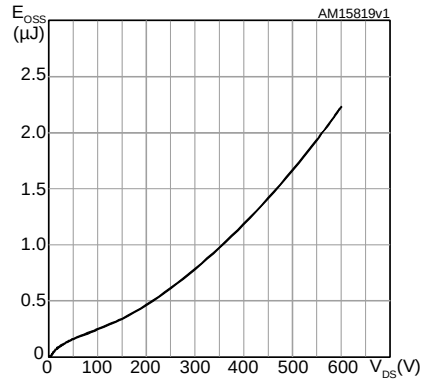

Figure 10: Normalized gate threshold voltage vs temperature

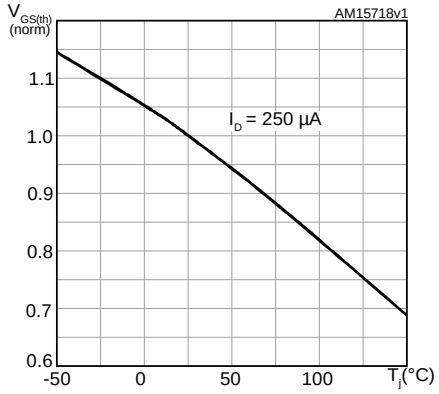

Figure 11: Normalized on-resistance vs temperature

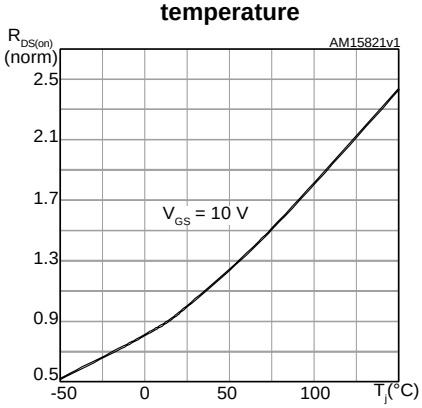

Figure 12: Source-drain diode forward characteristics

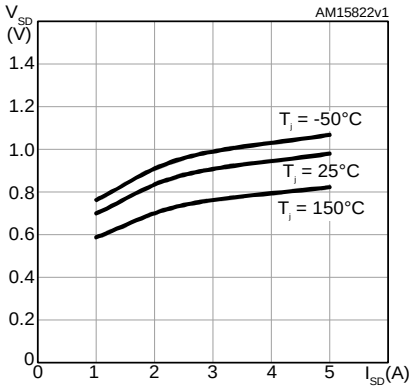

Figure 13: Normalized V(BR)DSS vs temperature

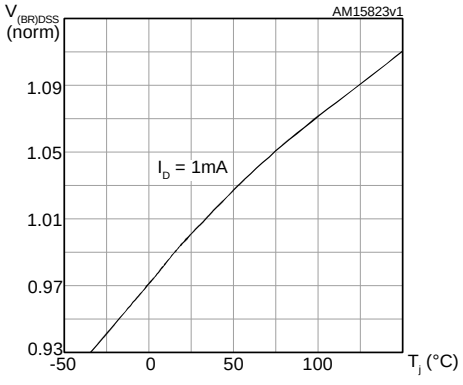

3 Test circuits

Figure 14: Switching times test circuit for resistive load

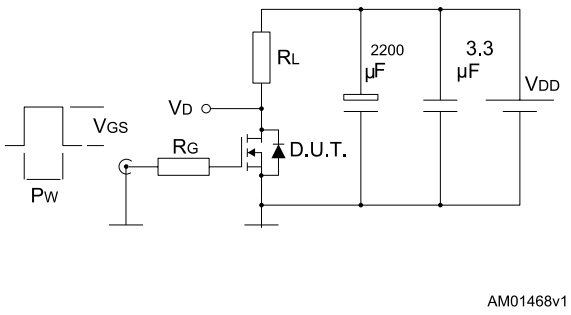

Figure 15: Gate charge test circuit

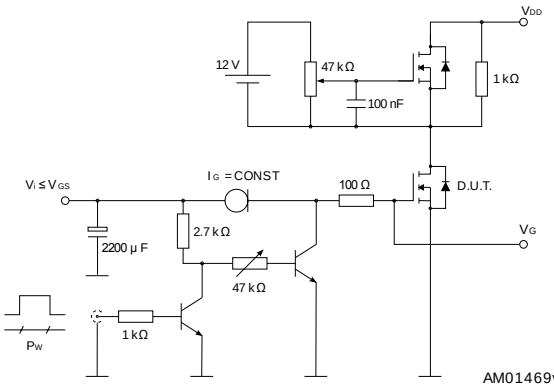

Figure 16: Test circuit for inductive load switching and diode recovery times

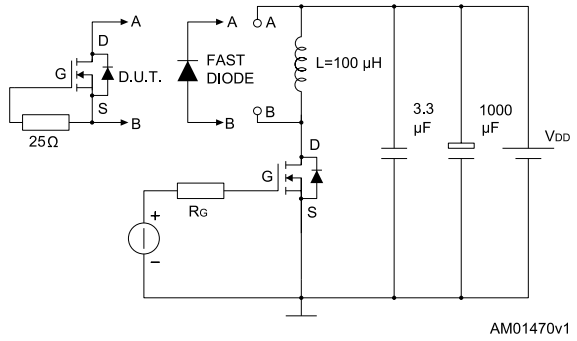

Figure 17: Unclamped inductive load test circuit

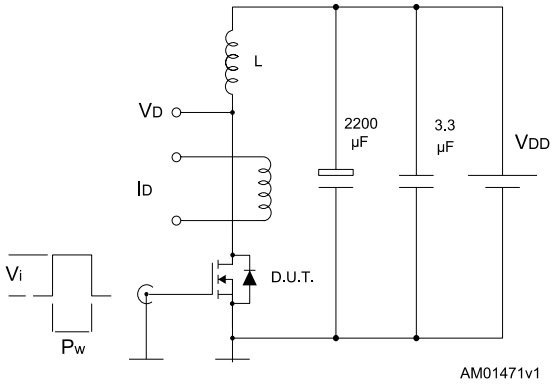

Figure 18: Unclamped inductive waveform

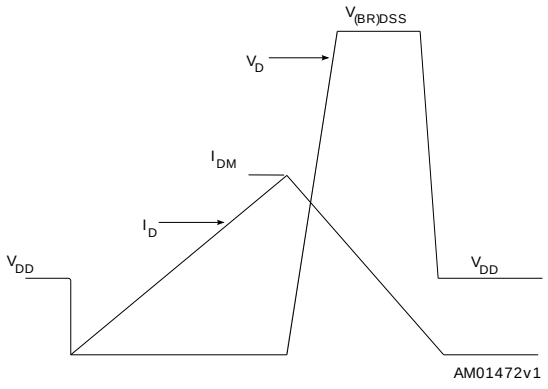

Figure 19: Switching time waveform

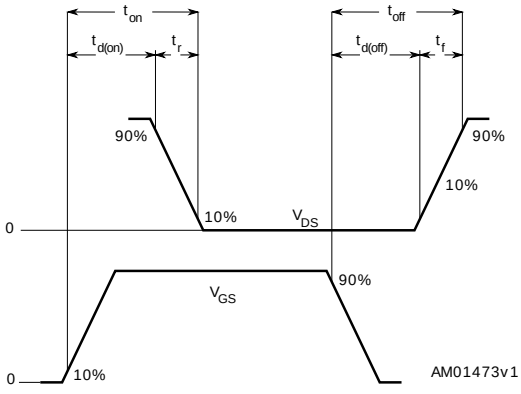

4 Package mechanical data

In order to meet environmental requirements, ST offers these devices in different grades of ECOPACK® packages, depending on their level of environmental compliance. ECOPACK® specifications, grade definitions and product status are available at: ***www.st.com***. ECOPACK® is an ST trademark.

4.1 Package mechanical data

Figure 20: PowerFLAT™ 5x5 drawings

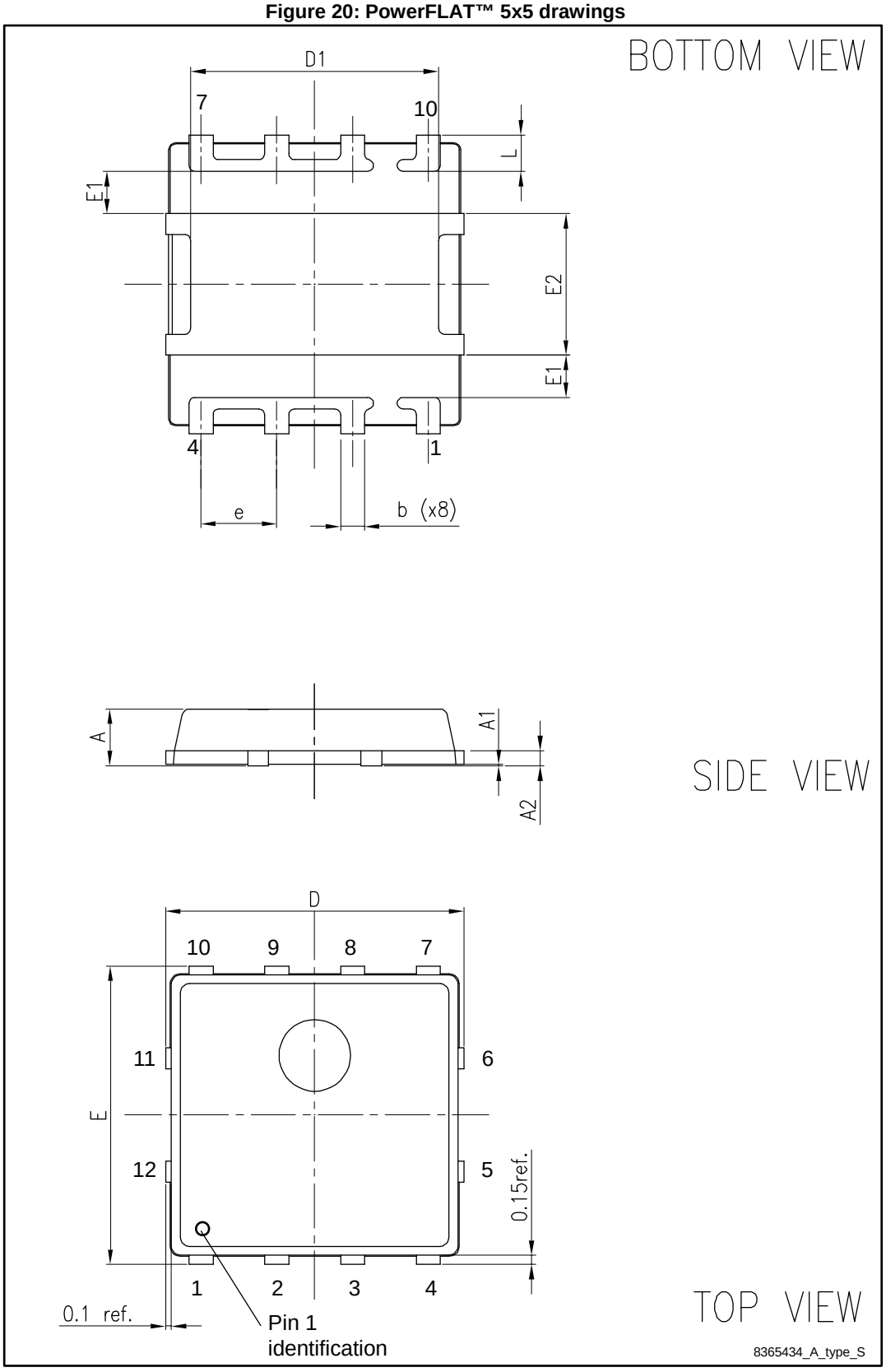

Table 9: PowerFLAT 5x5 mechanical data

Dim.	mm		
	Min.	Typ.	Max.
A	0.80		1.0
A1	0.02		0.05
A2		0.25	
b	0.30		0.50
D		5.00	
D1	4.05		4.25
E		5.00	
E1	0.64		0.79
E2	2.25		2.45
e		1.27	
L	0.45		0.75

Figure 21: PowerFLAT™ 5x5 recommended footprint (dimensions are in mm)

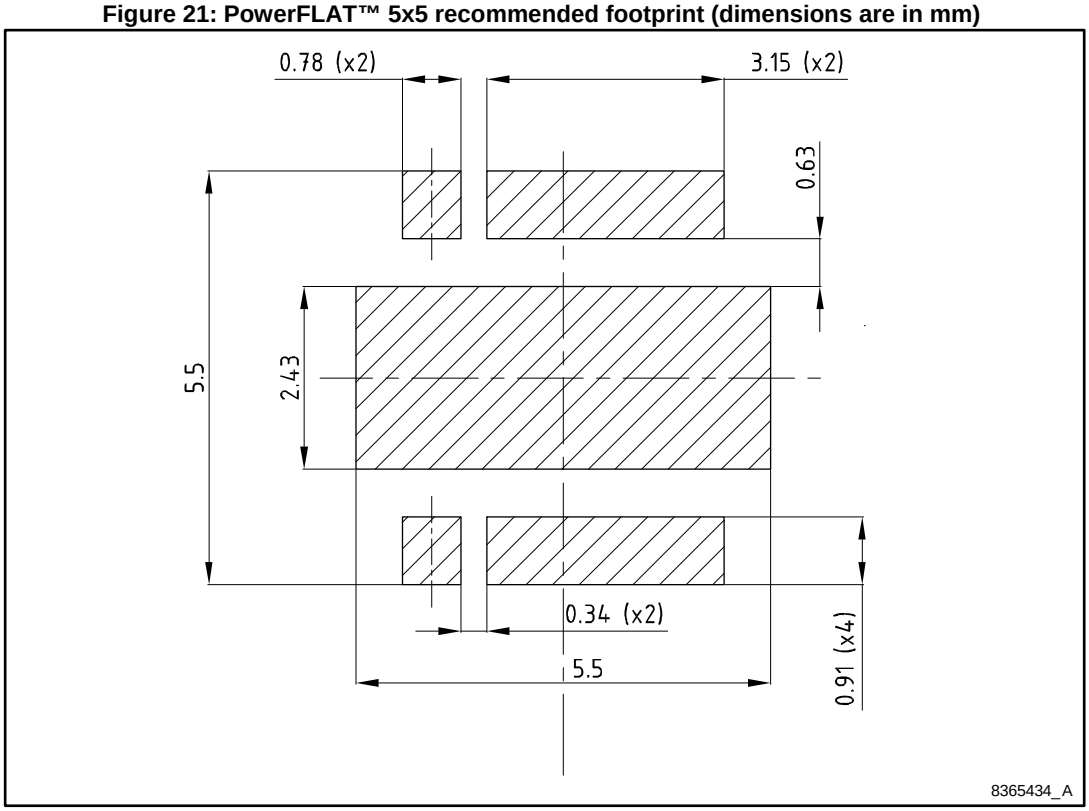

5 Revision history

Table 10: Document revision history

Date	Revision	Changes
26-Jan-2015	1	First release.

IMPORTANT NOTICE – PLEASE READ CAREFULLY

STMicroelectronics NV and its subsidiaries (“ST”) reserve the right to make changes, corrections, enhancements, modifications, and improvements to ST products and/or to this document at any time without notice. Purchasers should obtain the latest relevant information on ST products before placing orders. ST products are sold pursuant to ST’s terms and conditions of sale in place at the time of order acknowledgement.

Purchasers are solely responsible for the choice, selection, and use of ST products and ST assumes no liability for application assistance or the design of Purchasers’ products.

No license, express or implied, to any intellectual property right is granted by ST herein.

Resale of ST products with provisions different from the information set forth herein shall void any warranty granted by ST for such product.

ST and the ST logo are trademarks of ST. All other product or service names are the property of their respective owners.

Information in this document supersedes and replaces information previously supplied in any prior versions of this document.

© 2015 STMicroelectronics – All rights reserved