STL60NH3LL

N-channel 30 V - 0.0065 Ω - 30 A - PowerFLAT™ (6x5) ultra low gate charge STripFET™ Power MOSFET

Features

Type	V_{DSS}	$R_{DS(on)}$ (max)	I_D
STL60NH3LL	30V	<0.0085Ω	16A

- Improved die-to-footprint ratio
- Very low profile package (1mm max)
- Very low thermal resistance
- Very low gate charge
- Low threshold device

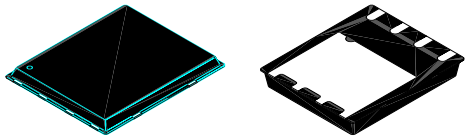

PowerFLAT™(6x5)

Application

- Switching applications

Description

This application specific Power MOSFET is the latest generation of STMicroelectronics unique "STripFET™" technology. The resulting transistor is optimized for low on-resistance and minimal gate charge. The Chip-scaled PowerFLAT™ package allows a significant board space saving, still boosting the performance.

Figure 1. Internal schematic diagram

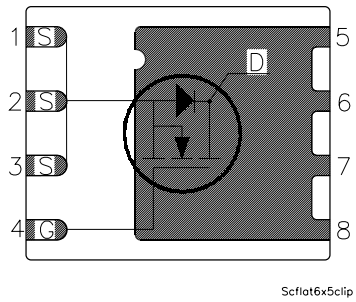

Table 1. Device summary

Order code	Marking	Package	Packaging
STL60NH3LL	L60NH3LL	PowerFLAT™ (6 x 5)	Tape & reel

Contents

1 Electrical ratings 3

2 Electrical characteristics 4

2.1 Electrical characteristics (curves) 6

3 Test circuit 9

4 Package mechanical data 10

5 Revision history 12

1 Electrical ratings

Table 2. Absolute maximum ratings

Symbol	Parameter	Value	Unit
V_{DS}	Drain-source voltage (V_{GS} = 0)	30	V
V_{GS}	Gate-source voltage	± 16	V
I_D (1)	Drain current (continuous) at T_C = 25°C	30	A
I_D (1)	Drain current (continuous) at T_C = 100°C	30	A
I_D(2)	Drain current (continuous) at T_C = 25°C	16	A
I_{DM} (3)	Drain current (pulsed)	64	A
P_{TOT}(1)	Total dissipation at T_C = 25°C	60	W
P_{TOT}(2)	Total dissipation at T_C = 25°C	4	W
	Derating factor	0.03	W/°C
T_j T_{stg}	Operating junction temperature Storage temperature	-55 to 150	°C

1. The value is rated according $R_{thj\text{-}C}$ and is limited by wire bonding.
2. This value is according $R_{thj\text{-}pcb}$
3. Pulse width limited by safe operating area

Table 3. Thermal resistance

Symbol	Parameter	Value	Unit
Rthj-case	Thermal resistance junction-case (drain) Max	2.08	°C/W
Rthj-pcb (1)	Thermal resistance junction-pcb Max	31.3	°C/W

1. When mounted on FR-4 board of 1inch^2, 2 oz. Cu., t<10sec

Table 4. Avalanche data

Symbol	Parameter	Value	Unit
I_{AV}	Not-repetitive avalanche current	7.5	A
E_{AS}	Single pulse avalanche energy (starting Tj=25°C, Id=Iav)	150	mJ

2 Electrical characteristics

(T_{CASE}=25°C unless otherwise specified)

Table 5. On/off states

Symbol	Parameter	Test conditions	Min.	Typ.	Max.	Unit
$V_{(BR)DSS}$	Drain-source breakdown voltage	I_D = 250 µA, V_{GS}= 0	30			V
I_{DSS}	Zero gate voltage drain current (V_{GS} = 0)	V_{DS} = Max rating, V_{DS} = Max rating, @125°C			1 10	µA µA
I_{GSS}	Gate body leakage current (V_{DS} = 0)	V_{DS} = ± 16 V			±100	nA
$V_{GS(th)}$	Gate threshold voltage	V_{DS}= V_{GS}, I_D = 250 µA	1			V
$R_{DS(on)}$	Static drain-source on resistance	V_{GS}= 10 V, I_D= 8 A V_{GS}= 4.5 V, I_D= 8 A		0.0065 0.0075	0.0085 0.0105	Ω Ω

Table 6. Dynamic

Symbol	Parameter	Test conditions	Min.	Typ.	Max.	Unit
C_{iss} C_{oss} C_{rss}	Input capacitance Output capacitance Reverse transfer capacitance	V_{DS}=25 V, f = 1 MHz, V_{GS}=0		1810 565 41		pF pF pF
Q_g Q_{gs} Q_{gd}	Total gate charge Gate-source charge Gate-drain charge	V_{DD} = 15 V, I_D = 16 A, V_{GS} = 4.5 V (see Figure 16)		18 4.8 5.3	24	nC nC nC
R_G	Gate input resistance	f=1 MHz gate DC bias = 0 test signal level = 20 mV open drain	0.5	1.5	3	Ω

Table 7. Switching times

Symbol	Parameter	Test conditions	Min.	Typ.	Max.	Unit
$t_{d(on)}$ t_r	Turn-on delay time Rise time	V_{DD} = 15 V, I_D = 8 A R_G= 4.7 Ω, V_{GS}= 10 V, (see Figure 15)		8 65		ns ns
$t_{d(off)}$ t_f	Turn-off delay time Fall time	V_{DD} = 15 V, I_D = 8 A R_G= 4.7 Ω, V_{GS}= 10 V, (see Figure 15)		30 20		ns ns

Table 8. Source drain diode

Symbol	Parameter	Test conditions	Min.	Typ.	Max	Unit
I_{SD} I_{SDM}	Source-drain current Source-drain current (pulsed)				16 64	A A
V_{SD} (1)	Forward on voltage	I_{SD} = 16 A, V_{GS} = 0			1.3	V
t_{rr} Q_{rr} I_{RRM}	Reverse recovery time Reverse recovery charge Reverse recovery current	I_{SD} = 16 V, di/dt = 100 A/µs V_{DD} = 20 V, T_j = 25°C (see Figure 17)		22 32 1.9		ns nC A

1. Pulsed: Pulse duration = 300µs, duty cycle 1.5%

2.1 Electrical characteristics (curves)

Figure 2. Safe operating area

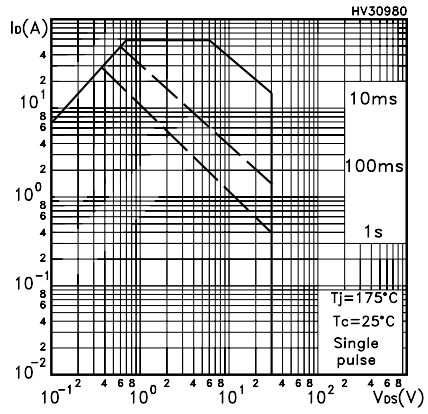

Figure 3. Thermal impedance

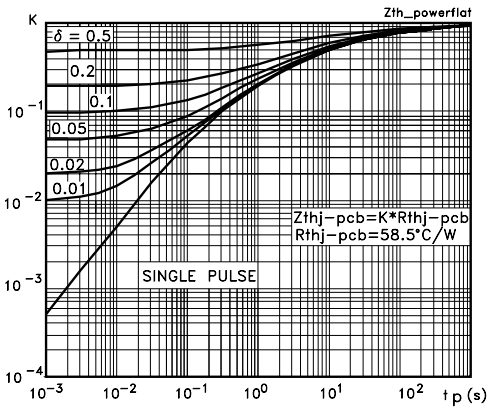

Figure 4. Output characteristics

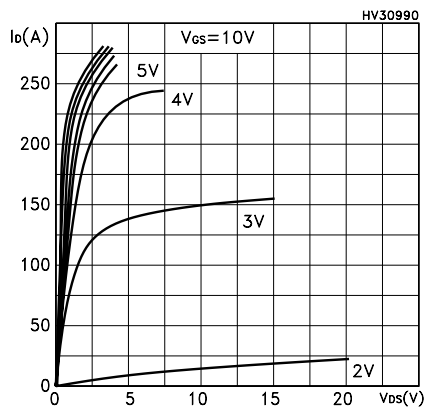

Figure 5. Transfer characteristics

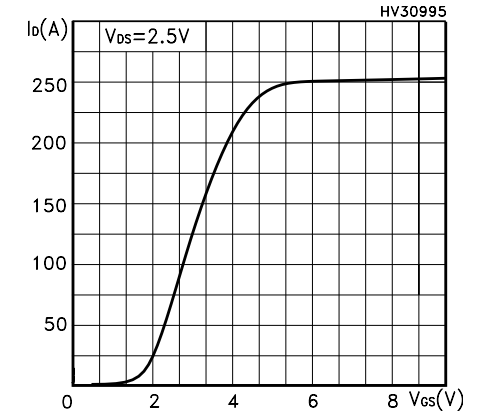

Figure 6. Normalized B_{VDSS} vs. temperature

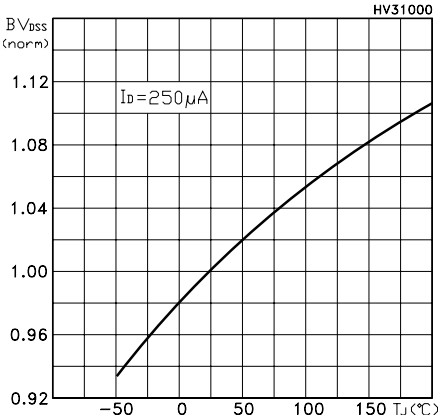

Figure 7. Static drain-source on resistance

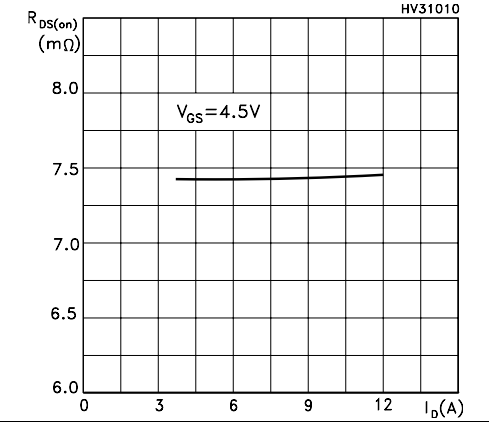

Figure 8. Gate charge vs. gate-source voltage

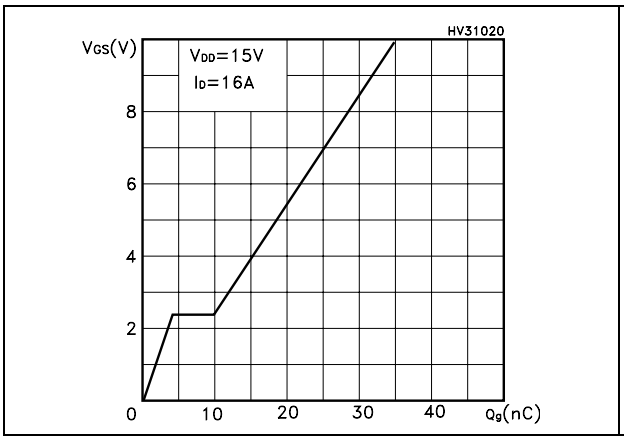

Figure 9. Capacitance variations

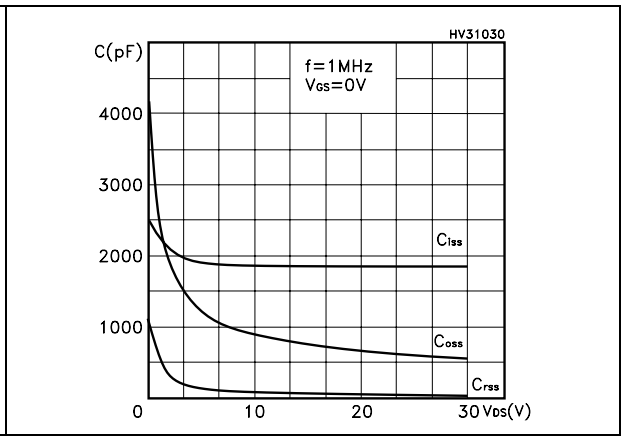

Figure 10. Normalized gate threshold voltage vs. temperature

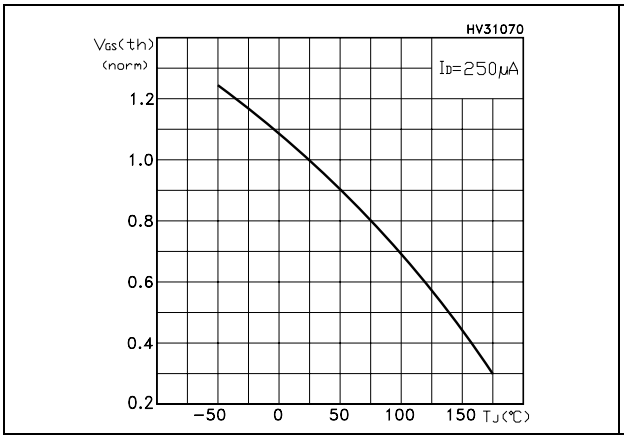

Figure 11. Normalized on resistance vs. temperature

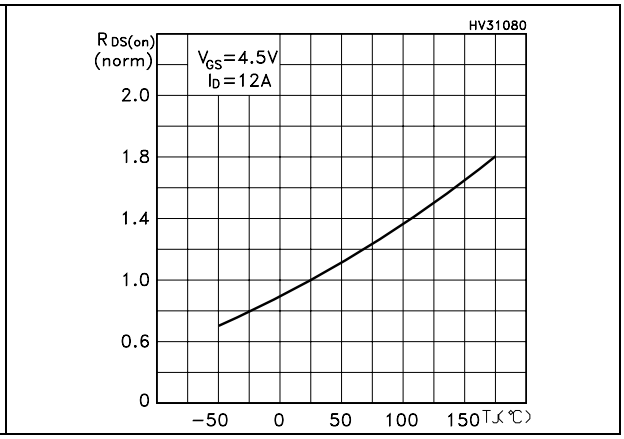

Figure 12. Source-drain diode forward characteristics

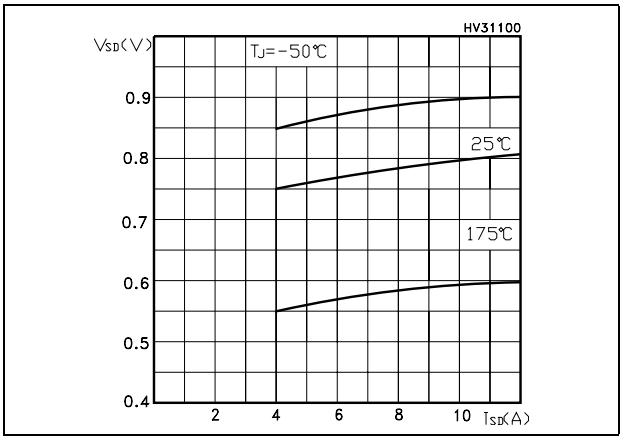

Figure 13. Allowable Iav vs Time in Avalanche

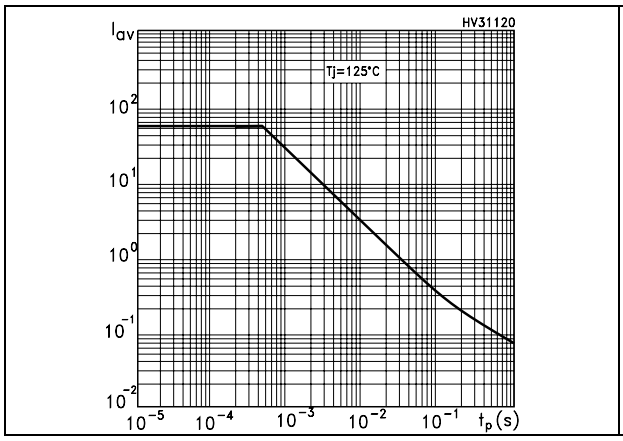

Figure 14. Allowable Iav vs Time in Avalanche

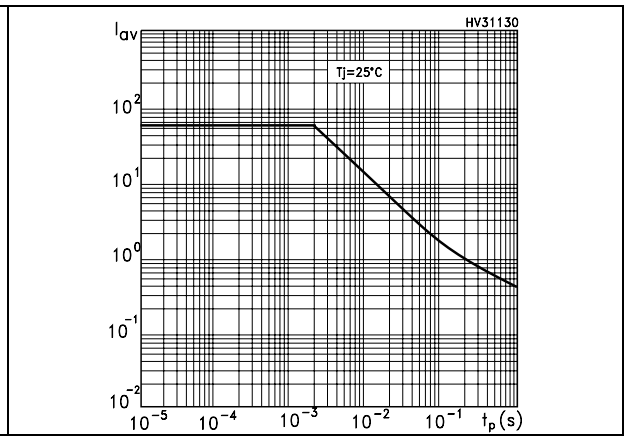

The previous curve gives the single pulse safe operating area for unclamped inductive loads under the following conditions:

$P_{D(AVE)} = 0.5*(1.3*BV_{DSS} *I_{AV})$

$E_{AS(AR)} = P_{D(AVE)} *t_{AV}$

Where:

I_{AV} is the allowable current in avalanche

$P_{D(AVE)}$ is the average power dissipation in avalanche (single pulse)

t_{AV} is the time in avalanche

3 Test circuit

Figure 15. Switching times test circuit for resistive load

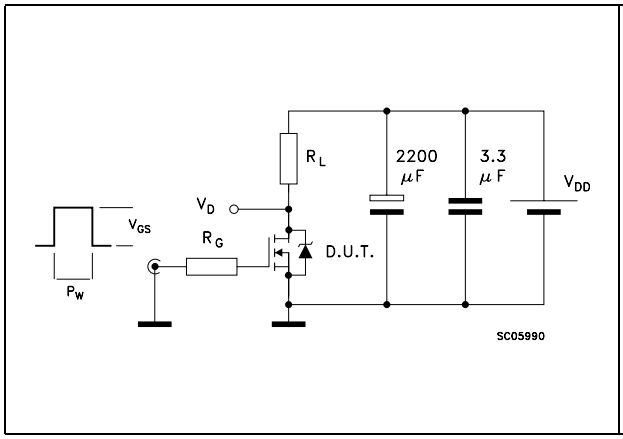

Figure 16. Gate charge test circuit

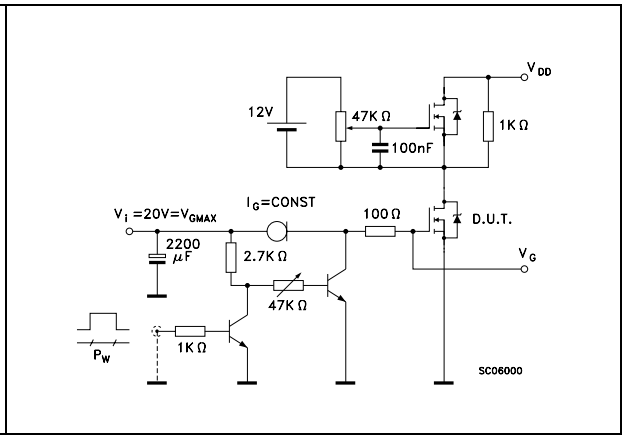

Figure 17. Test circuit for inductive load switching and diode recovery times

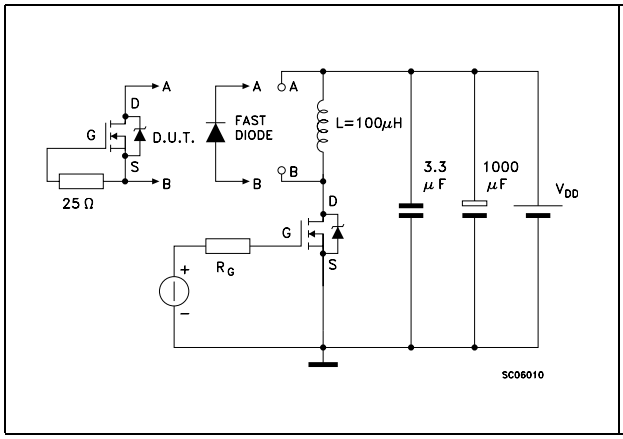

Figure 18. Unclamped inductive load test circuit

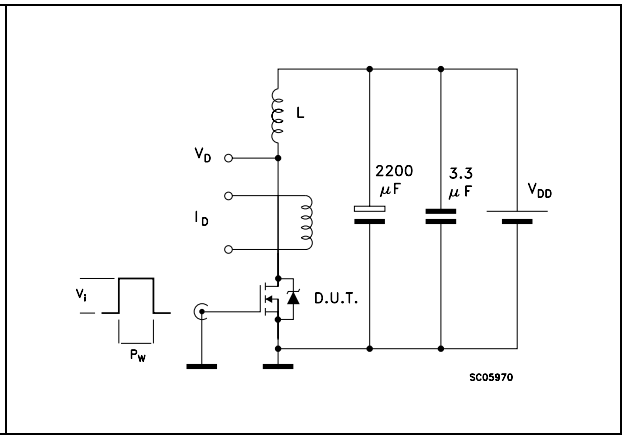

Figure 19. Unclamped inductive waveform

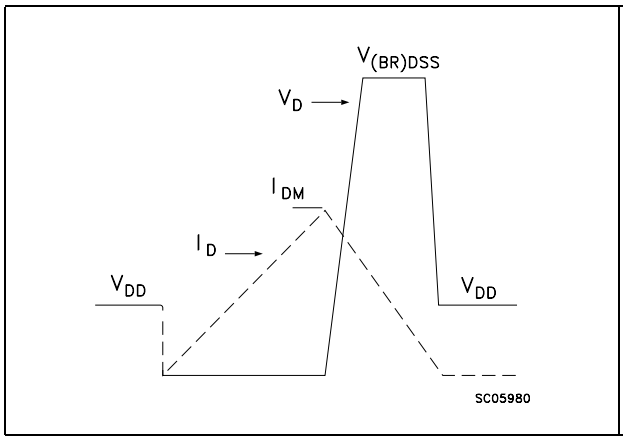

Figure 20. Switching time waveform

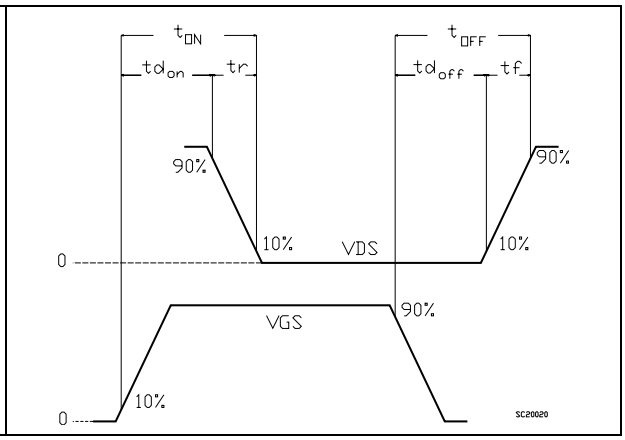

4 Package mechanical data

In order to meet environmental requirements, ST offers these devices in ECOPACK® packages. These packages have a lead-free second level interconnect. The category of second level interconnect is marked on the package and on the inner box label, in compliance with JEDEC Standard JESD97. The maximum ratings related to soldering conditions are also marked on the inner box label. ECOPACK is an ST trademark. ECOPACK specifications are available at: www.st.com

PowerFLAT™ (6x5) MECHANICAL DATA

DIM.	mm.			inch		
	MIN.	TYP	MAX.	MIN.	TYP.	MAX.
A	0.80	0.83	0.93	0.031	0.032	0.036
A1		0.02	0.05		0.0007	0.0019
A3		0.20			0.007	
b	0.35	0.40	0.47	0.013	0.015	0.018
D		5.00			0.196	
D1		4.75			0.187	
D2	4.15	4.20	4.25	0.163	0.165	0.167
E		6.00			0.236	
E1		5.75			0.226	
E2	3.43	3.48	3.53	0.135	0.137	0.139
E4	2.58	2.63	2.68		0.103	0.105
e		1.27			0.050	
L	0.70	0.80	0.90	0.027	0.031	0.035

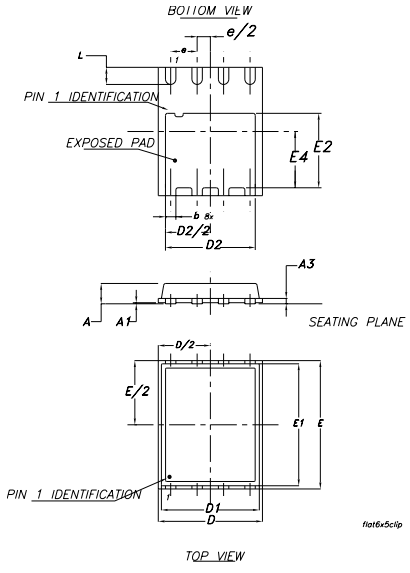

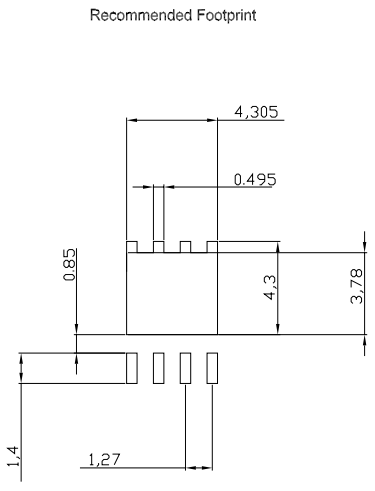

Note: all dimentions are in mm.

5 Revision history

Table 9. Document revision history

Date	Revision	Changes
10-Jan-2006	1	First release
14-Apr-2006	2	New footprint
03-Jul-2006	3	New Ecopack label
01-Aug-2006	4	Modified *Figure 2.* and *Figure 3.*
05-Sep-2006	5	New template, no content change
11-Dec-2007	6	Added *Table 4: Avalanche data*

Please Read Carefully:

Information in this document is provided solely in connection with ST products. STMicroelectronics NV and its subsidiaries (“ST”) reserve the right to make changes, corrections, modifications or improvements, to this document, and the products and services described herein at any time, without notice.

All ST products are sold pursuant to ST’s terms and conditions of sale.

Purchasers are solely responsible for the choice, selection and use of the ST products and services described herein, and ST assumes no liability whatsoever relating to the choice, selection or use of the ST products and services described herein.

No license, express or implied, by estoppel or otherwise, to any intellectual property rights is granted under this document. If any part of this document refers to any third party products or services it shall not be deemed a license grant by ST for the use of such third party products or services, or any intellectual property contained therein or considered as a warranty covering the use in any manner whatsoever of such third party products or services or any intellectual property contained therein.

UNLESS OTHERWISE SET FORTH IN ST’S TERMS AND CONDITIONS OF SALE ST DISCLAIMS ANY EXPRESS OR IMPLIED WARRANTY WITH RESPECT TO THE USE AND/OR SALE OF ST PRODUCTS INCLUDING WITHOUT LIMITATION IMPLIED WARRANTIES OF MERCHANTABILITY, FITNESS FOR A PARTICULAR PURPOSE (AND THEIR EQUIVALENTS UNDER THE LAWS OF ANY JURISDICTION), OR INFRINGEMENT OF ANY PATENT, COPYRIGHT OR OTHER INTELLECTUAL PROPERTY RIGHT.

UNLESS EXPRESSLY APPROVED IN WRITING BY AN AUTHORIZED ST REPRESENTATIVE, ST PRODUCTS ARE NOT RECOMMENDED, AUTHORIZED OR WARRANTED FOR USE IN MILITARY, AIR CRAFT, SPACE, LIFE SAVING, OR LIFE SUSTAINING APPLICATIONS, NOR IN PRODUCTS OR SYSTEMS WHERE FAILURE OR MALFUNCTION MAY RESULT IN PERSONAL INJURY, DEATH, OR SEVERE PROPERTY OR ENVIRONMENTAL DAMAGE. ST PRODUCTS WHICH ARE NOT SPECIFIED AS "AUTOMOTIVE GRADE" MAY ONLY BE USED IN AUTOMOTIVE APPLICATIONS AT USER’S OWN RISK.

Resale of ST products with provisions different from the statements and/or technical features set forth in this document shall immediately void any warranty granted by ST for the ST product or service described herein and shall not create or extend in any manner whatsoever, any liability of ST.

ST and the ST logo are trademarks or registered trademarks of ST in various countries.

Information in this document supersedes and replaces all information previously supplied.

The ST logo is a registered trademark of STMicroelectronics. All other names are the property of their respective owners.

© 2007 STMicroelectronics - All rights reserved

STMicroelectronics group of companies

Australia - Belgium - Brazil - Canada - China - Czech Republic - Finland - France - Germany - Hong Kong - India - Israel - Italy - Japan - Malaysia - Malta - Morocco - Singapore - Spain - Sweden - Switzerland - United Kingdom - United States of America

www.st.com