Elektronische Bauelemente

STL431

3-Terminal

Adjustable Shunt Regulator

SOT-89

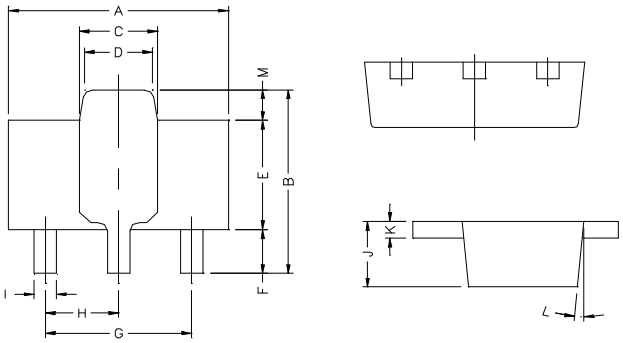

Description

The STL431 series are three-terminal adjustable regulators with guaranteed thermal stability over applicable temperature ranges. The output voltage may be set to any value between V_{REF} (approximately 2.495V) and 36V with two external resistors. It provides very wide applications, including shunt regulator, series regulator, switching regulator, voltage reference and others.

Marking :

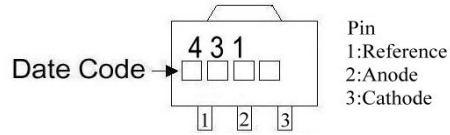

REF.	Millimeter		REF.	Millimeter	
	Min.	Max.		Min.	Max.
A	4.4	4.6	G	3.00 REF.	
B	4.05	4.25	H	1.50 REF.	
C	1.50	1.70	I	0.40	0.52
D	1.30	1.50	J	1.40	1.60
E	2.40	2.60	K	0.35	0.41
F	0.89	1.20	L	5° TYP.	
			M	0.70 REF.	

Absolute Maximum Ratings at T_A=25℃

Parameter	Symbol	Ratings	Unit
Cathode Voltage	V_{KA}	37	V
Cathode Current Range (Continuous)	I_{KA}	-100~+150	mA
Reference Input Current Range	I_{REF}	-0.05~+10	mA
Operating Junction And Storage Temperature Range	Tj ,Tstg	-65~+150	℃
Total Power Dissipation	P_D	1.0	W

Characteristics at Ta = 25℃

Parameter		Symbol	Min	Typ.	Max.	Unit	Test Conditions	
Cathode Voltage		V_{KA}	V_{REF}	-	36	V		
Cathode Current		I_{KA}	1	-	100	mA		
Reference Input Voltage	STL431C	V_{REF}	2.445	2.495	2.545	V	V_{KA}= V_{REF},I_K=10mA	
	STL431B		2.470	2.495	2.520			
	STL431A		2.483	2.495	2.507			
Deviation of reference Input Voltage Over temperature(note)		$\Delta V_{REF}/\Delta T$	-	4.5	17	mV	V_{KA}=V_{REF},I_K=10mA Tmin≦Ta≦Tmax	
Ratio of Change in Reference Input Voltage to the Change in Cathode Voltage		$\Delta V_{REF}/\Delta V_{KA}$	-	-1.0	-2.7	mV/V	I_K=10mA	ΔV_{KA}=10V~V_{REF}
			-	-0.5	-2.0			ΔV_{KA}=36V~10V
Reference Input Current		I_{REF}	-	1.5	4	uA	I_K=10mA,R1=10KΩ,R2=∞	
Deviation of reference Input Current Over Full Temperature Range		$\Delta I_{REF}/\Delta T$	-	0.4	1.2	uA	I_K=10mA,R1=10KΩ,R2=∞ T_A=Full Temperature	
Minimum Cathode Current for Regulation		I_{KA}(min)	-	0.45	1.0	mA	V_{KA}=VREF	
Off-State Cathode Current		I_{KA}(off)	-	0.05	1.0	uA	V_{KA}=36V,V_{REF}=0	
Dynamic Impedance		$\lvert Z_{KA} \rvert$	-	0.15	0.5	Ω	V_{KA}=V_{REF},I_K=1 to 100mA,F≤1.0KHz	

Note: Tmin= 0℃,Tmax=+70℃

Functional Block Diagram & Symbol

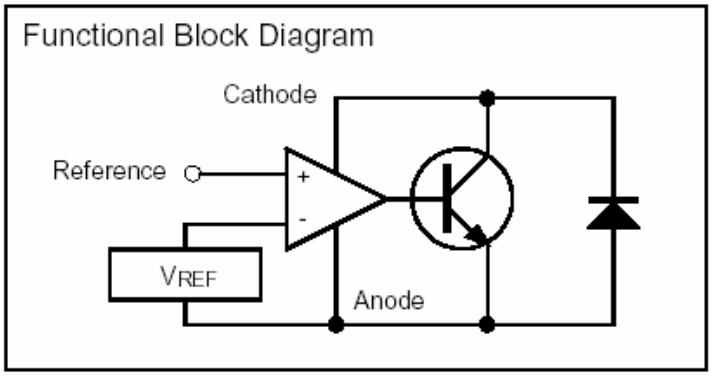

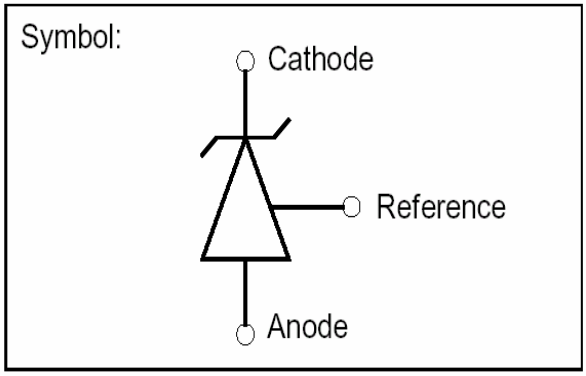

Test Circuits

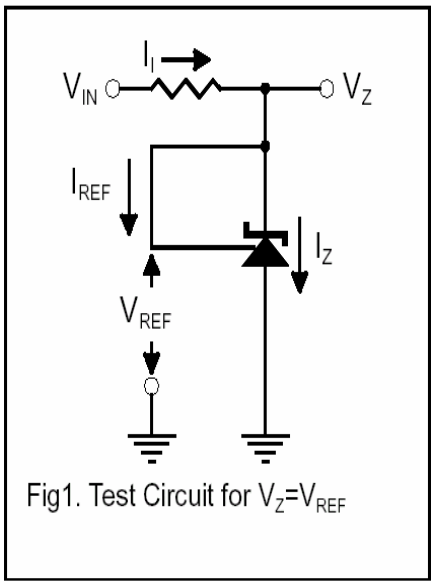

Fig1. Test Circuit for $V_Z=V_{REF}$

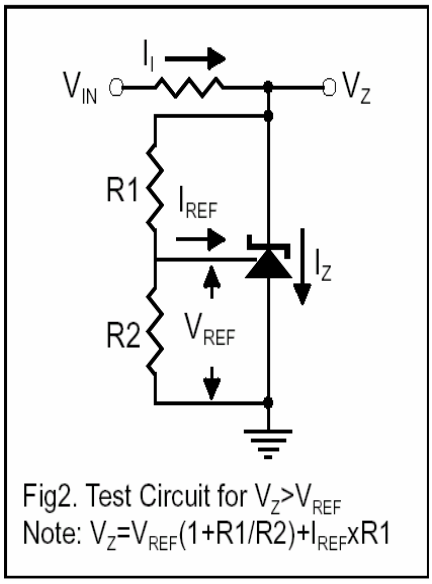

Fig2. Test Circuit for $V_Z>V_{REF}$
Note: $V_Z=V_{REF}(1+R1/R2)+I_{REF}xR1$

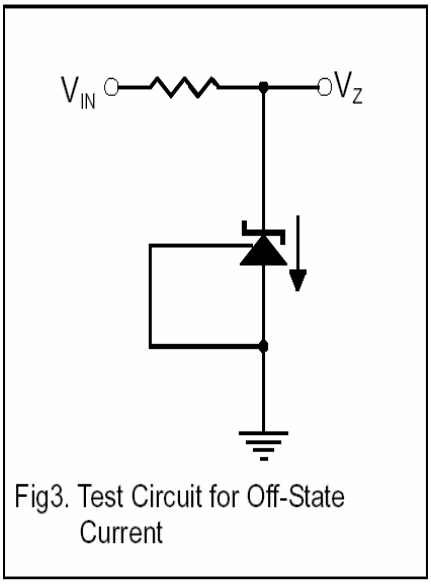

Fig3. Test Circuit for Off-State Current

Characteristics Curve

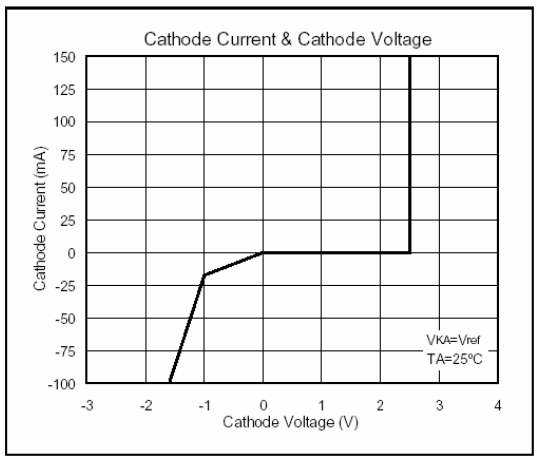

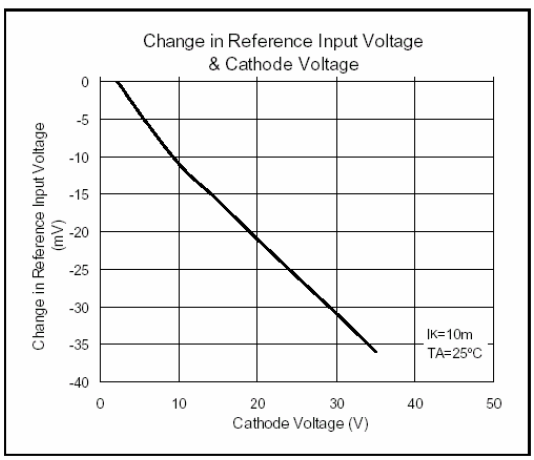

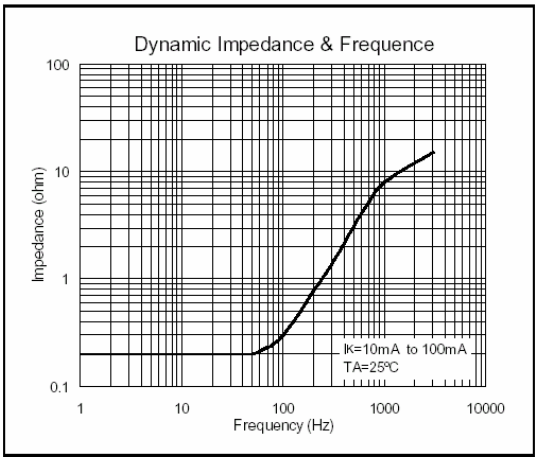
Dynamic Impedance & Frequence
Impedance (ohm)
100
10
1
0.1
1
10
100
1000
10000
Frequency (Hz)
IK=10mA to 100mA
TA=25ºC

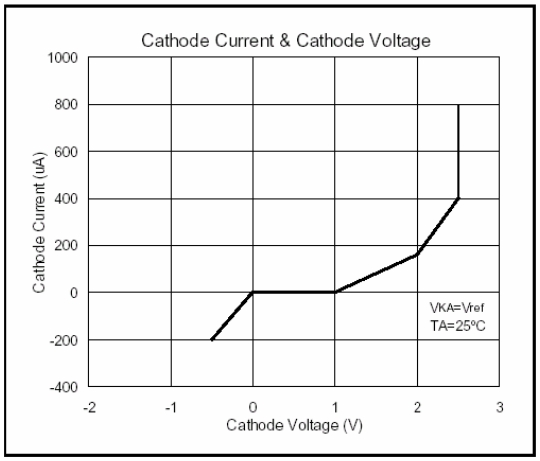
Cathode Current & Cathode Voltage
Cathode Current (uA)
1000
800
600
400
200
0
-200
-400
-2
-1
0
1
2
3
Cathode Voltage (V)
VKA=Vref
TA=25ºC

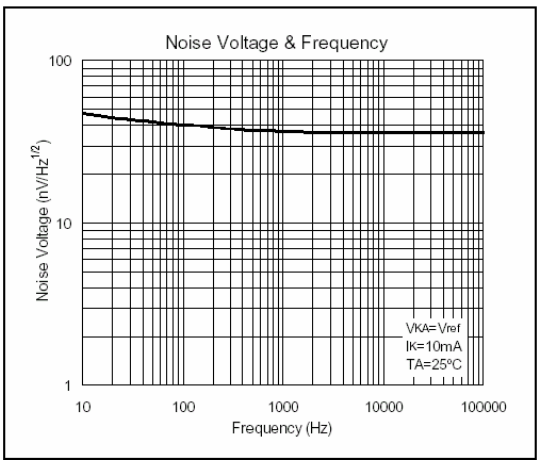
Noise Voltage & Frequency
Noise Voltage (nV/Hz^1/2)
100
10
1
10
100
1000
10000
100000
Frequency (Hz)
VKA=Vref
IK=10mA
TA=25ºC

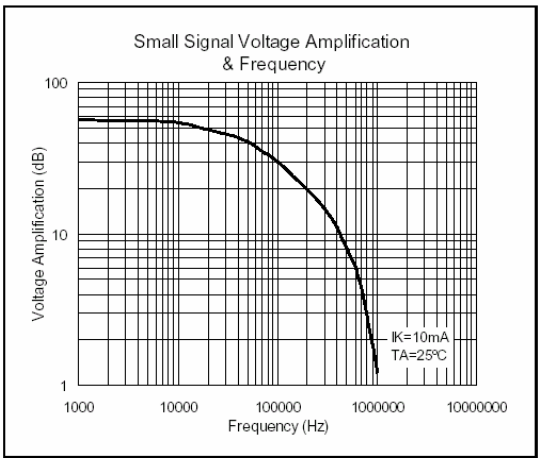
Small Signal Voltage Amplification
& Frequency
Voltage Amplification (dB)
100
10
1
1000
10000
100000
1000000
10000000
Frequency (Hz)
IK=10mA
TA=25ºC

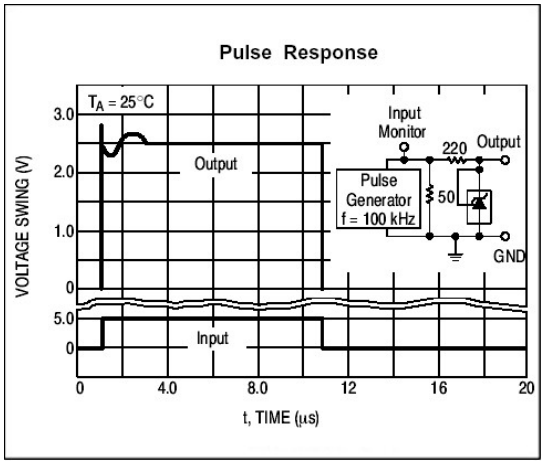
Pulse Response
VOLTAGE SWING (V)
3.0
2.0
1.0
0
5.0
0
0
4.0
8.0
12
16
20
t, TIME (µs)
TA = 25°C
Output
Input
Input
Monitor
220
Output
Pulse
Generator
f = 100 kHz
50
GND