STL31N65M5

N-channel 650 V, 0.135 Ω typ., 15 A MDmesh™ V Power MOSFET in a PowerFLAT™ 8x8 HV package

Datasheet - production data

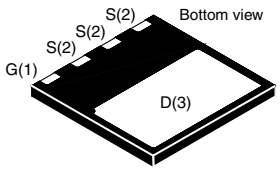

PowerFLAT™ 8x8 HV

Figure 1. Internal schematic diagram

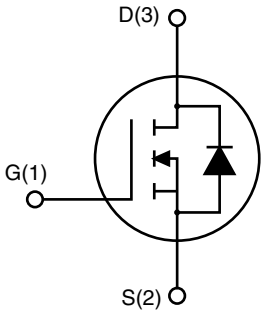

AM01475v1

Features

Order code	V_{DS}	$R_{DS(on)}$ max	I_D
STL31N65M5	710 V	0.162 Ω	15 A(1)

1. The value is rated according to $R_{thj\text{-}case}$ and limited by package.

- Worldwide best $R_{DS(on)}$ * area
- Higher V_{DSS} rating and high dv/dt capability
- Excellent switching performance

Applications

- Switching applications

Description

This device is an N-channel MDmesh™ V Power MOSFET based on an innovative proprietary vertical process technology, which is combined with STMicroelectronics' well-known PowerMESH™ horizontal layout structure. The resulting product has extremely low on-resistance, which is unmatched among silicon-based Power MOSFETs, making it especially suitable for applications which require superior power density and outstanding efficiency.

Table 1. Device summary

Order code	Marking	Packages	Packaging
STL31N65M5	31N65M5	PowerFLAT™ 8x8 HV	Tape and reel

This is information on a product in full production. www.st.com

Contents

1 Electrical ratings 3

2 Electrical characteristics 4

2.1 Electrical characteristics (curves) 6

3 Test circuits 9

4 Package mechanical data 10

5 Packaging mechanical data 14

6 Revision history 16

1 Electrical ratings

Table 2. Absolute maximum ratings

Symbol	Parameter	Value	Unit
V_{DS}	Drain-source voltage	650	V
V_{GS}	Gate-source voltage	± 25	V
I_D (1)	Drain current (continuous) at T_C = 25 °C	15	A
I_D (1)	Drain current (continuous) at T_C = 100 °C	12	A
I_{DM} (1),(2)	Drain current (pulsed)	60	A
I_D(3)	Drain current (continuous) at T_{amb} = 25 °C	2.8	A
I_D(3)	Drain current (continuous) at T_{amb} = 100 °C	1.8	A
P_{TOT} (3)	Total dissipation at T_{amb} = 25 °C	2.8	W
P_{TOT} (1)	Total dissipation at T_C = 25 °C	125	W
I_{AR}	Avalanche current, repetitive or not-repetitive (pulse width limited by T_j max)	5	A
E_{AS}	Single pulse avalanche energy (starting T_j = 25 °C, I_D = I_{AR}, V_{DD} = 50 V)	410	mJ
dv/dt (4)	Peak diode recovery voltage slope	15	V/ns
T_{stg}	Storage temperature	- 55 to 150	°C
T_j	Max. operating junction temperature	150	°C

1. The value is rated according to $R_{thj\text{-}case}$ and limited by package.
2. Pulse width limited by safe operating area.
3. When mounted on FR-4 board of inch², 2oz Cu.
4. $I_{SD} \leq 15$ A, di/dt $\leq$ 400 A/µs, V_{DD} = 400 V, $V_{DS(peak)} < V_{(BR)DSS}$.

Table 3. Thermal data

Symbol	Parameter	Value	Unit
$R_{thj\text{-}case}$	Thermal resistance junction-case max	1	°C/W
$R_{thj\text{-}amb}$(1)	Thermal resistance junction-ambient max	45	°C/W

1. When mounted on FR-4 board of inch², 2oz Cu.

2 Electrical characteristics

(T_C = 25 °C unless otherwise specified)

Table 4. On /off states

Symbol	Parameter	Test conditions	Min.	Typ.	Max.	Unit
$V_{(BR)DSS}$	Drain-source breakdown voltage	I_D = 1 mA, V_{GS} = 0	650			V
I_{DSS}	Zero gate voltage drain current (V_{GS} = 0)	V_{DS} = 650 V			1	µA
		V_{DS} = 650 V, T_C=125 °C			100	µA
I_{GSS}	Gate-body leakage current (V_{DS} = 0)	V_{GS} = ± 25 V			±100	nA
$V_{GS(th)}$	Gate threshold voltage	V_{DS} = V_{GS}, I_D = 250 µA	3	4	5	V
$R_{DS(on)}$	Static drain-source on-resistance	V_{GS} = 10 V, I_D = 11 A		0.135	0.162	Ω

Table 5. Dynamic

Symbol	Parameter	Test conditions	Min.	Typ.	Max.	Unit
C_{iss}	Input capacitance	V_{DS} = 100 V, f = 1 MHz, V_{GS} = 0	-	1865	-	pF
C_{oss}	Output capacitance		-	45	-	pF
C_{rss}	Reverse transfer capacitance		-	4	-	pF
$C_{o(er)}$(1)	Equivalent output capacitance energy related	V_{GS} = 0, V_{DS} = 0 to 80% $V_{(BR)DSS}$	-	43	-	pF
$C_{o(tr)}$(2)	Equivalent output capacitance time related		-	146	-	pF
R_G	Intrinsic gate resistance	f = 1 MHz open drain	-	2.8	-	Ω
Q_g	Total gate charge	V_{DD} = 520 V, I_D = 11 A, V_{GS} = 10 V (see *Figure 16*)	-	45	-	nC
Q_{gs}	Gate-source charge		-	11.5	-	nC
Q_{gd}	Gate-drain charge		-	20	-	nC

1. Energy related is defined as a constant equivalent capacitance giving the same stored energy as C_{oss} when V_{DS} increases from 0 to 80% V_{DSS}
2. Time related is defined as a constant equivalent capacitance giving the same charging time as C_{oss} when V_{DS} increases from 0 to 80% V_{DSS}

Table 6. Switching times

Symbol	Parameter	Test conditions	Min.	Typ.	Max.	Unit
t_d (v)	Voltage delay time	V_{DD} = 400 V, I_D = 14 A, R_G = 4.7 Ω, V_{GS} = 10 V (see *Figure 20*)	-	46	-	ns
t_r (v)	Voltage rise time		-	8	-	ns
t_f (i)	Current fall time		-	8.5	-	ns
t_c(off)	Crossing time		-	11	-	ns

Table 7. Source drain diode

Symbol	Parameter	Test conditions	Min.	Typ.	Max.	Unit
I_{SD} (1)	Source-drain current		-		15	A
I_{SDM} (1),(2)	Source-drain current (pulsed)		-		60	A
V_{SD} (3)	Forward on voltage	I_{SD} = 15 A, V_{GS} = 0	-		1.5	V
t_{rr}	Reverse recovery time	I_{SD} = 15 A, di/dt= 100 A/µs V_{DD} = 100 V (see *Figure 17*)	-	290		ns
Q_{rr}	Reverse recovery charge		-	4		µC
I_{RRM}	Reverse recovery current		-	27		A
t_{rr}	Reverse recovery time	I_{SD} = 15 A, di/dt= 100 A/µs V_{DD} = 100 V, T_j = 150 °C (see *Figure 17*)	-	340		ns
Q_{rr}	Reverse recovery charge		-	5		µC
I_{RRM}	Reverse recovery current		-	29		A

1. The value is rated according to $R_{thj\text{-}case}$ and limited by package.
2. Pulse width limited by safe operating area
3. Pulsed: pulse duration = 300 µs, duty cycle 1.5%

2.1 Electrical characteristics (curves)

Figure 2. Safe operating area

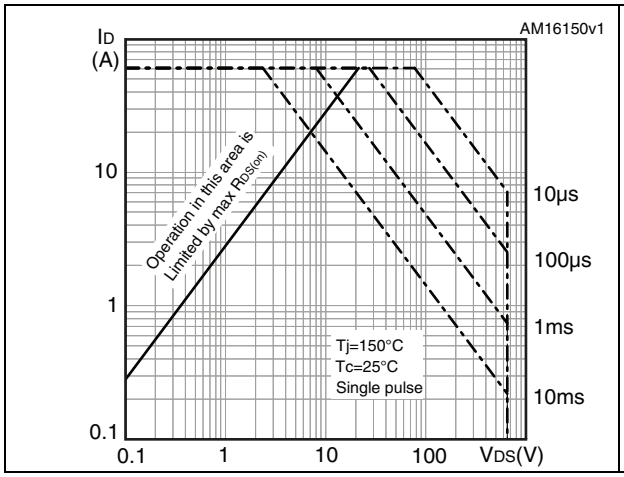

Figure 3. Thermal impedance

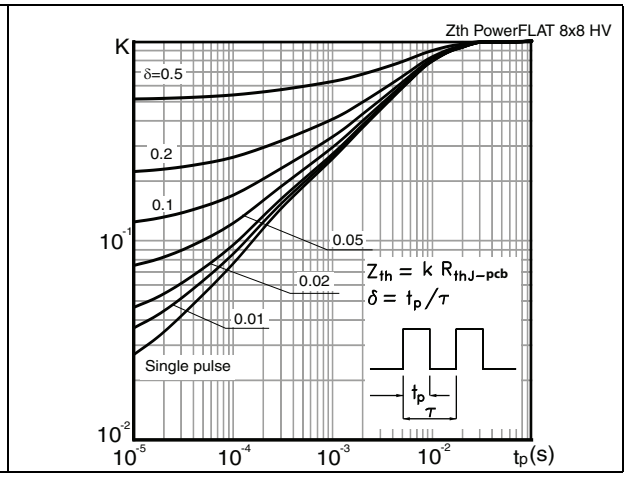

Figure 4. Output characteristics

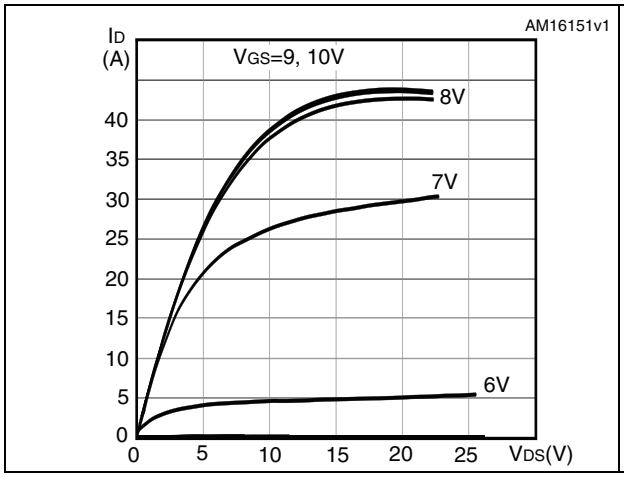

Figure 5. Transfer characteristics

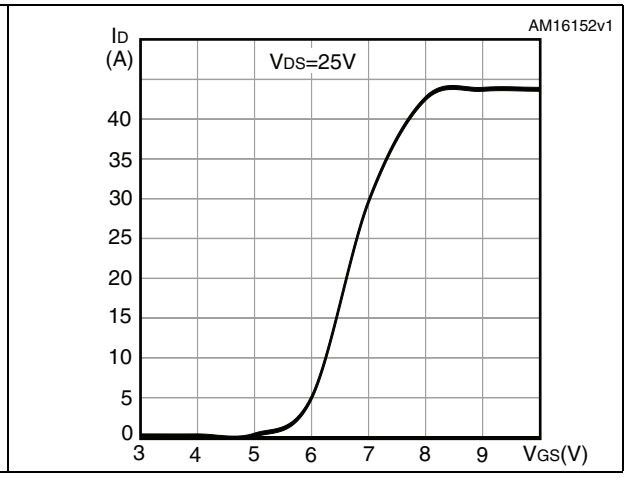

Figure 6. Gate charge vs gate-source voltage

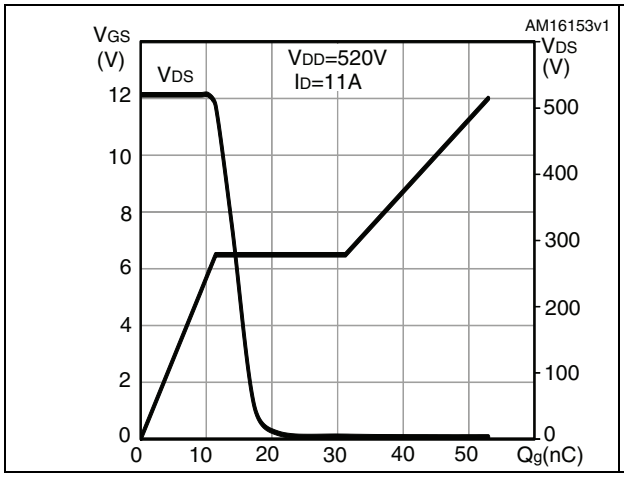

Figure 7. Static drain-source on-resistance

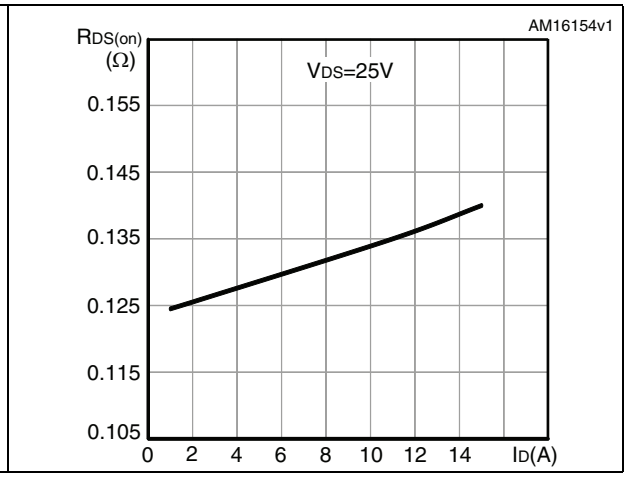

Figure 8. Capacitance variations

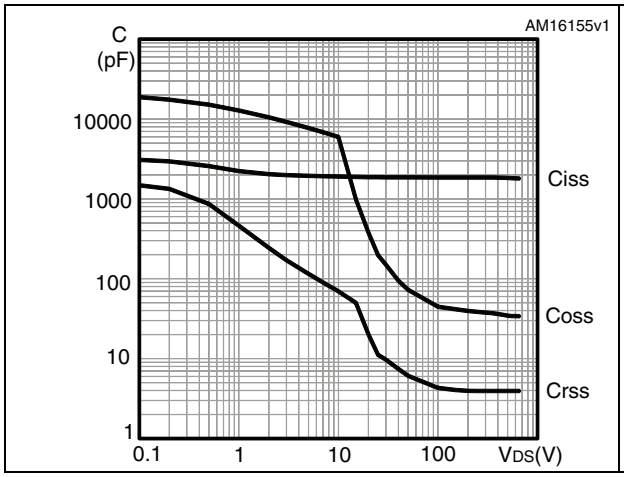

Figure 9. Output capacitance stored energy

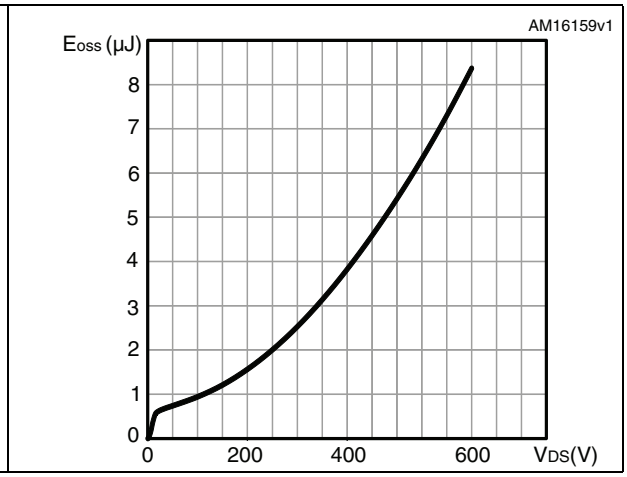

Figure 10. Normalized gate threshold voltage vs. temperature

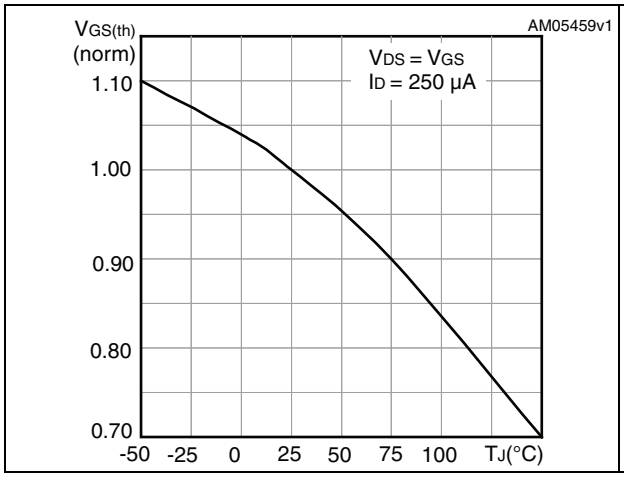

Figure 11. Normalized on-resistance vs. temperature

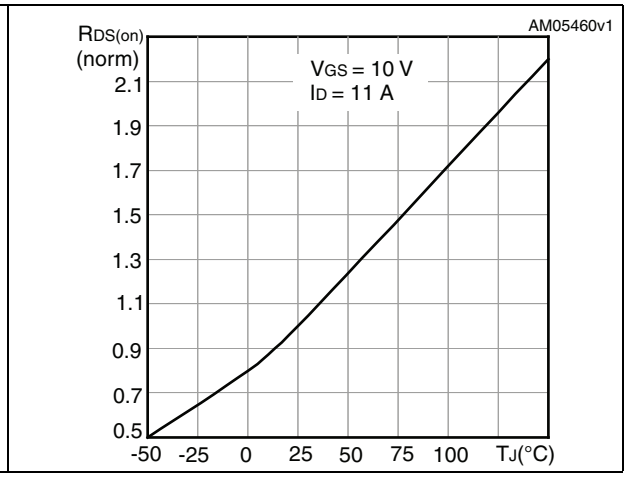

Figure 12. Drain-source diode forward characteristics

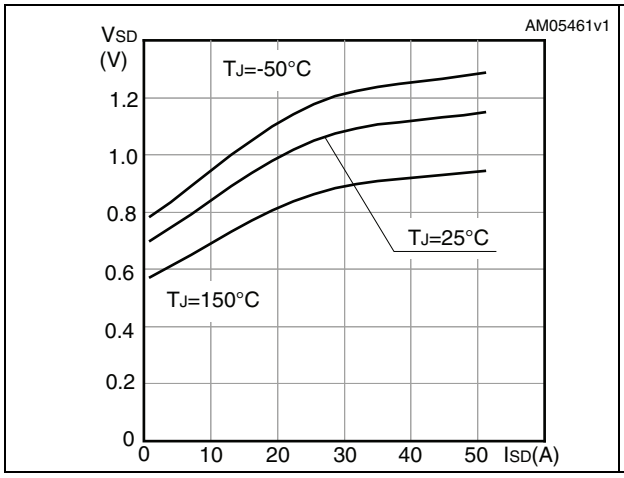

Figure 13. Normalized V_{DS} vs. temperature

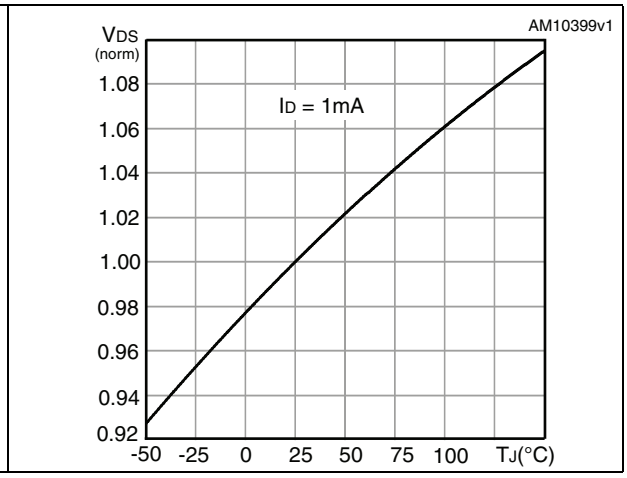

Figure 14. Switching losses vs. gate resistance (1)

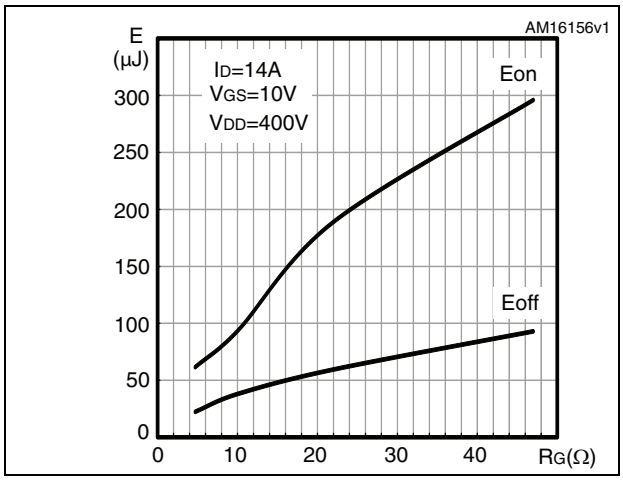

1. Eon including reverse recovery of a SiC diode

3 Test circuits

Figure 15. Switching times test circuit for resistive load

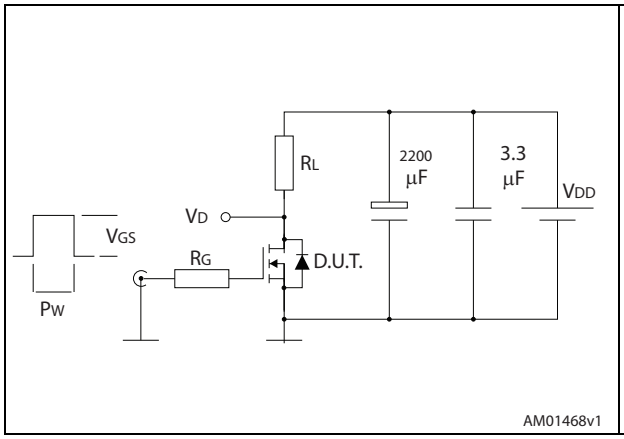

Figure 16. Gate charge test circuit

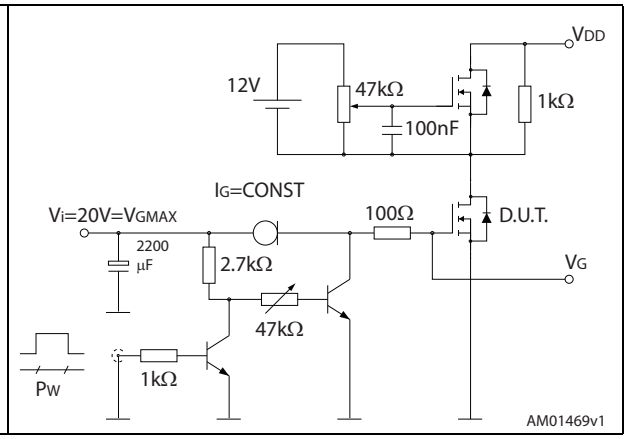

Figure 17. Test circuit for inductive load switching and diode recovery times

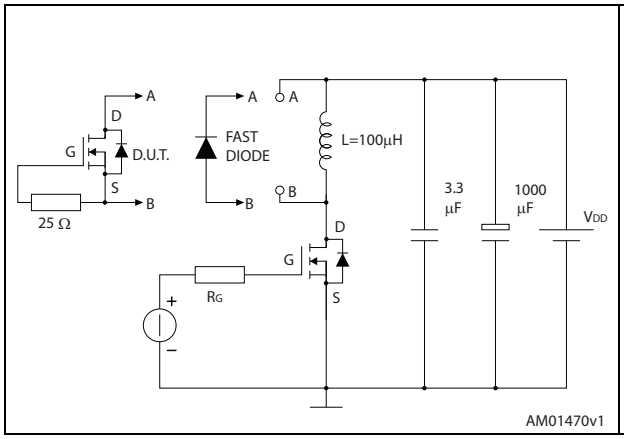

Figure 18. Unclamped inductive load test circuit

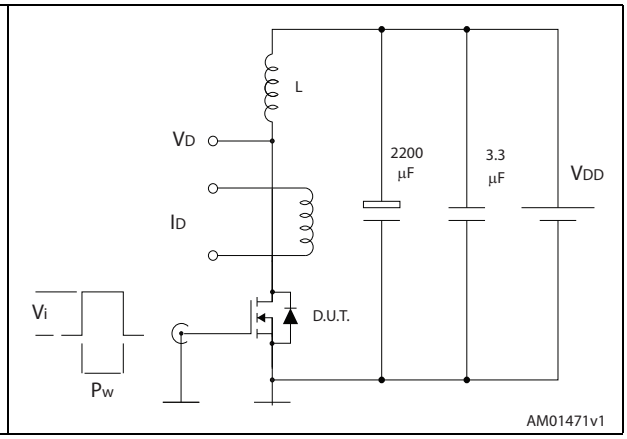

Figure 19. Unclamped inductive waveform

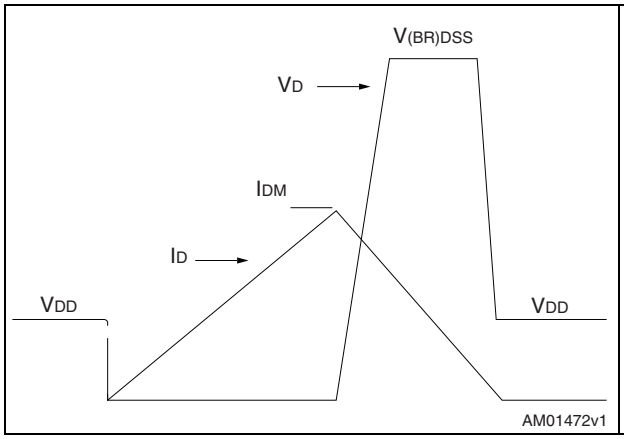

Figure 20. Switching time waveform

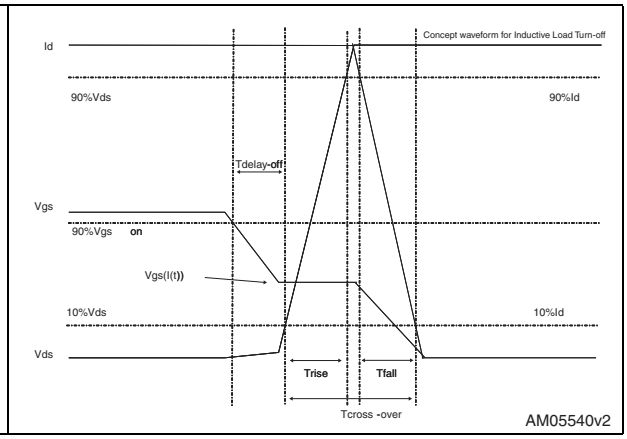

4 Package mechanical data

In order to meet environmental requirements, ST offers these devices in different grades of ECOPACK® packages, depending on their level of environmental compliance. ECOPACK® specifications, grade definitions and product status are available at: *www.st.com*.
ECOPACK® is an ST trademark.

Table 8. PowerFLAT™ 8x8 HV mechanical data

Dim.	mm		
	Min.	Typ.	Max.
A	0.80	0.90	1.00
A1	0.00	0.02	0.05
b	0.95	1.00	1.05
D		8.00	
E		8.00	
D2	7.05	7.20	7.30
E2	4.15	4.30	4.40
e		2.00	
L	0.40	0.50	0.60

Figure 21. PowerFLAT™ 8x8 HV drawing mechanical data

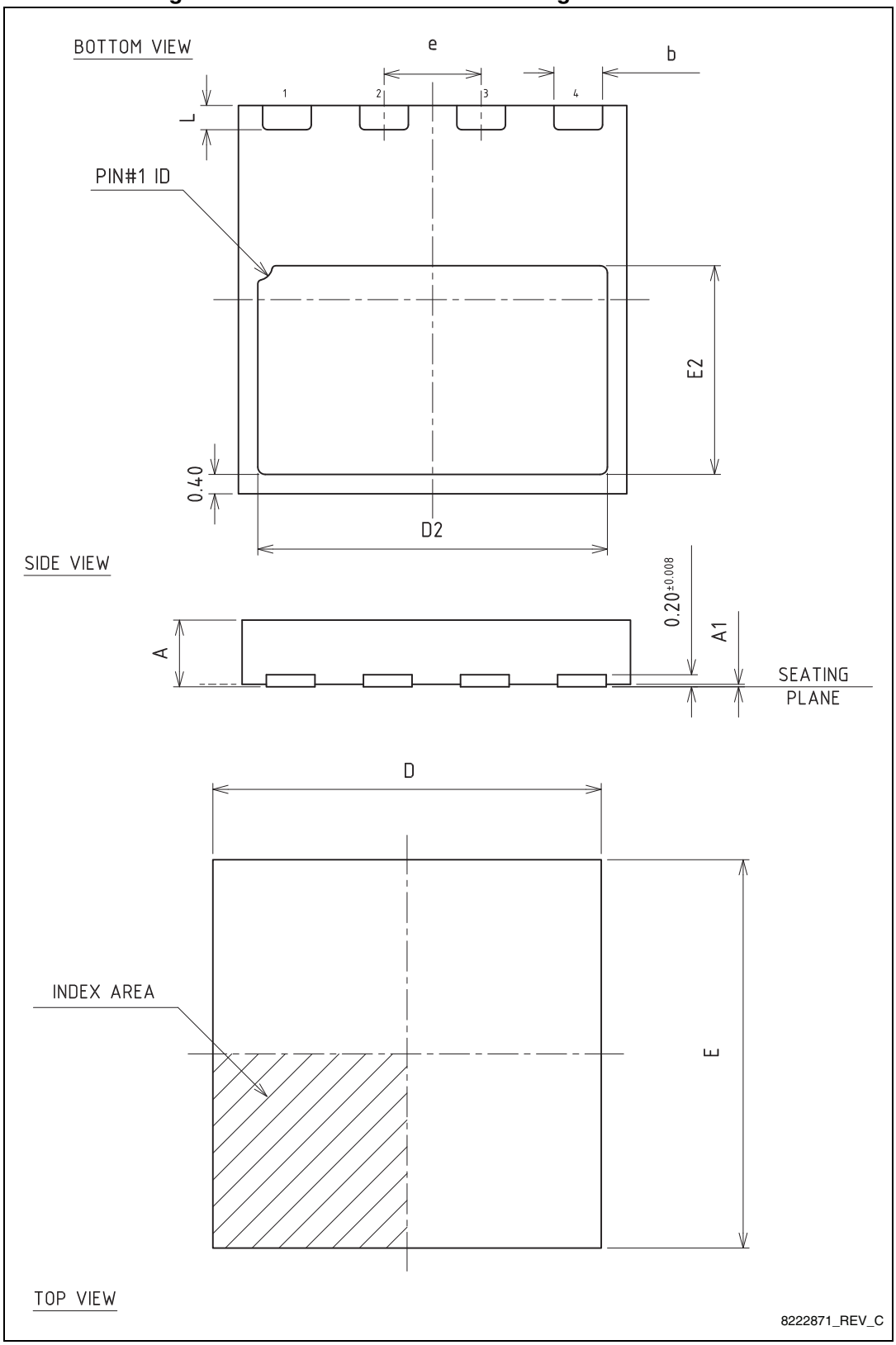

Figure 22. PowerFLAT™ 8x8 HV recommended footprint (dimensions in mm.)

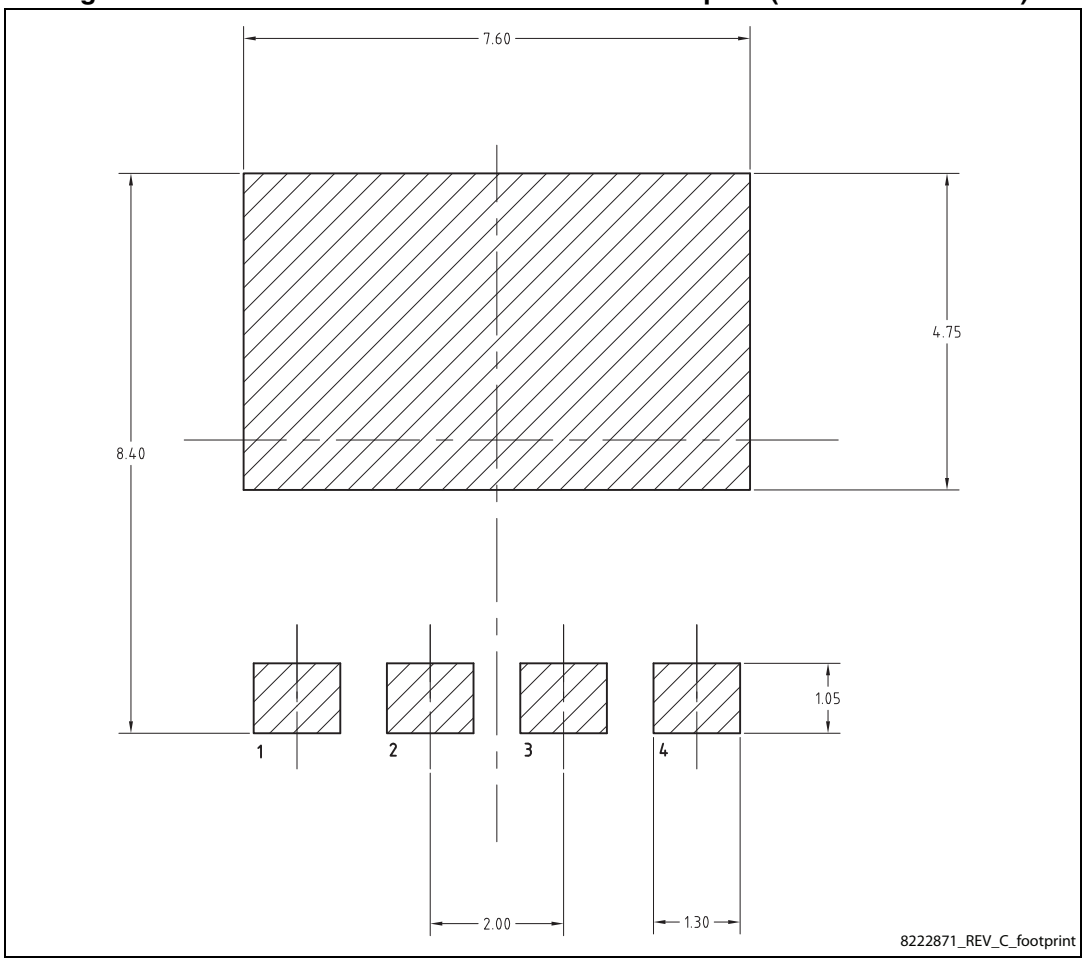

5 Packaging mechanical data

Figure 23. PowerFLAT™ 8x8 HV tape

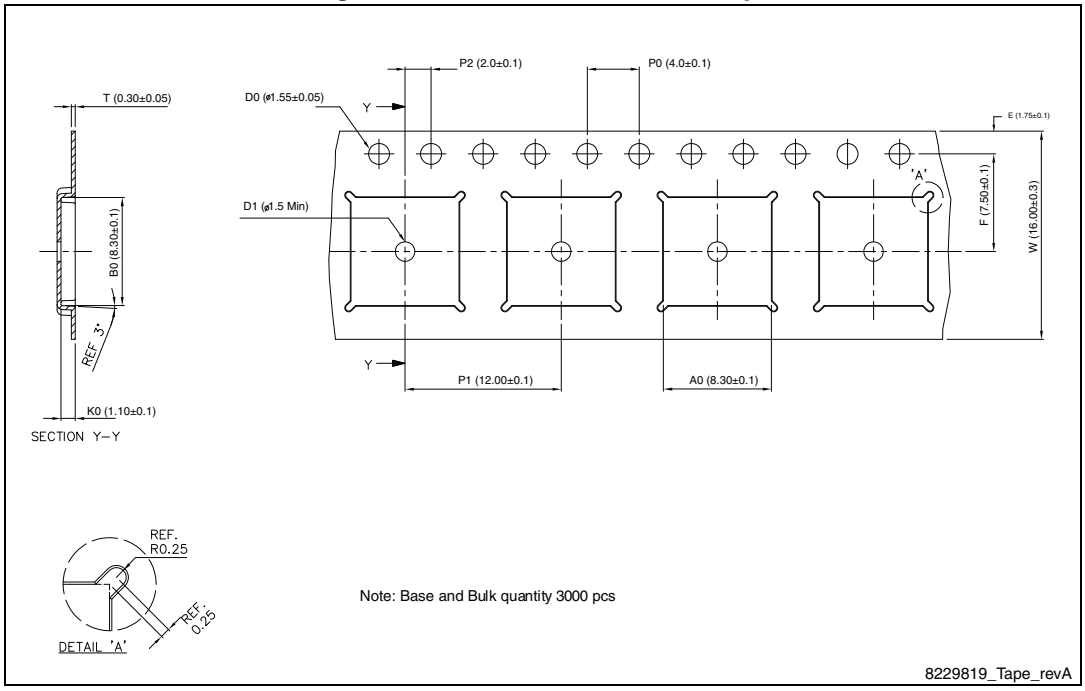

Figure 24. PowerFLAT™ 8x8 HV package orientation in carrier tape.

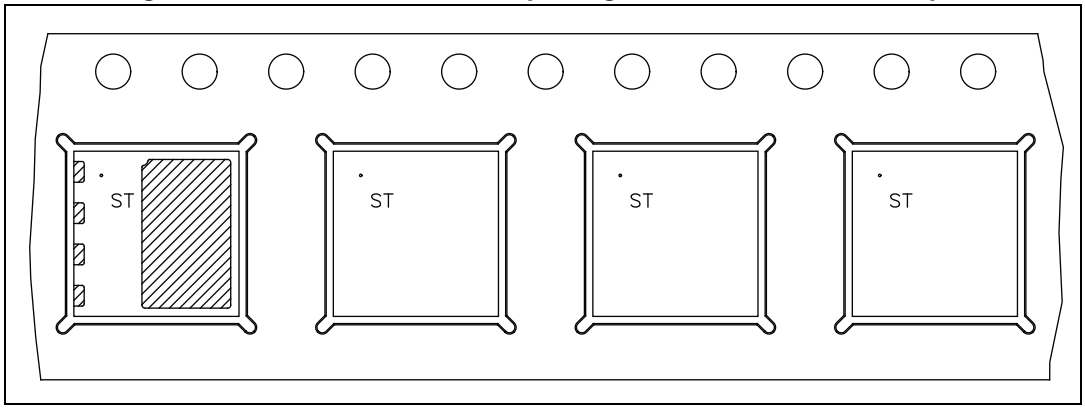

Figure 25. PowerFLAT™ 8x8 HV reel

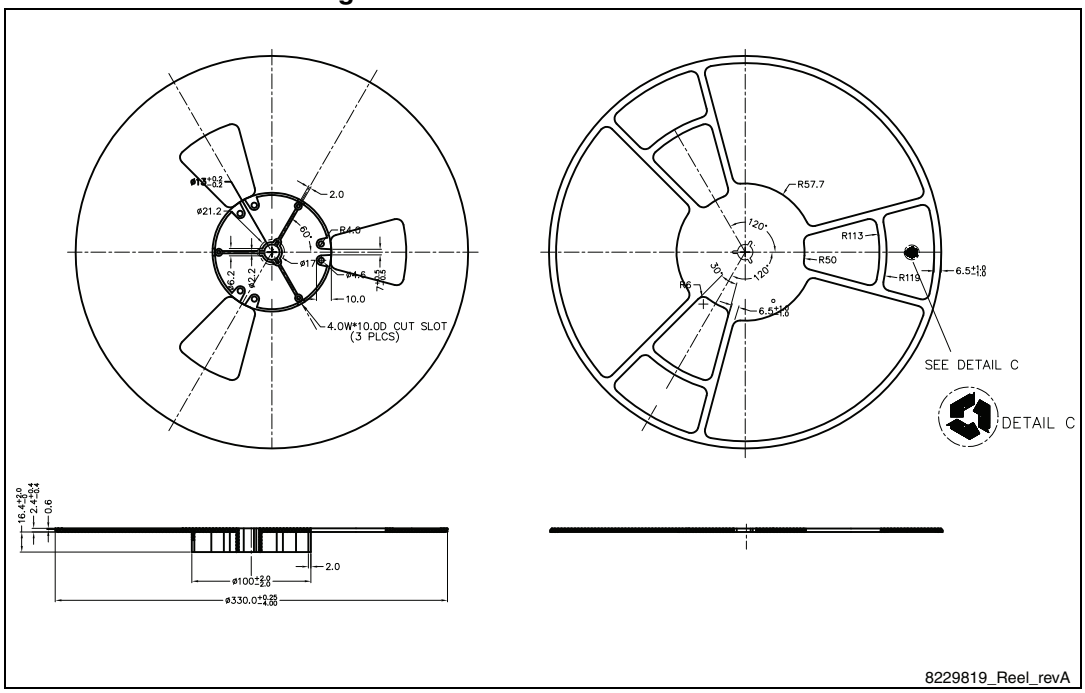

6 Revision history

Table 9. Document revision history

Date	Revision	Changes
31-Oct-2013	1	First release.

Please Read Carefully:

Information in this document is provided solely in connection with ST products. STMicroelectronics NV and its subsidiaries (“ST”) reserve the right to make changes, corrections, modifications or improvements, to this document, and the products and services described herein at any time, without notice.

All ST products are sold pursuant to ST’s terms and conditions of sale.

Purchasers are solely responsible for the choice, selection and use of the ST products and services described herein, and ST assumes no liability whatsoever relating to the choice, selection or use of the ST products and services described herein.

No license, express or implied, by estoppel or otherwise, to any intellectual property rights is granted under this document. If any part of this document refers to any third party products or services it shall not be deemed a license grant by ST for the use of such third party products or services, or any intellectual property contained therein or considered as a warranty covering the use in any manner whatsoever of such third party products or services or any intellectual property contained therein.

UNLESS OTHERWISE SET FORTH IN ST’S TERMS AND CONDITIONS OF SALE ST DISCLAIMS ANY EXPRESS OR IMPLIED WARRANTY WITH RESPECT TO THE USE AND/OR SALE OF ST PRODUCTS INCLUDING WITHOUT LIMITATION IMPLIED WARRANTIES OF MERCHANTABILITY, FITNESS FOR A PARTICULAR PURPOSE (AND THEIR EQUIVALENTS UNDER THE LAWS OF ANY JURISDICTION), OR INFRINGEMENT OF ANY PATENT, COPYRIGHT OR OTHER INTELLECTUAL PROPERTY RIGHT.

ST PRODUCTS ARE NOT DESIGNED OR AUTHORIZED FOR USE IN: (A) SAFETY CRITICAL APPLICATIONS SUCH AS LIFE SUPPORTING, ACTIVE IMPLANTED DEVICES OR SYSTEMS WITH PRODUCT FUNCTIONAL SAFETY REQUIREMENTS; (B) AERONAUTIC APPLICATIONS; (C) AUTOMOTIVE APPLICATIONS OR ENVIRONMENTS, AND/OR (D) AEROSPACE APPLICATIONS OR ENVIRONMENTS. WHERE ST PRODUCTS ARE NOT DESIGNED FOR SUCH USE, THE PURCHASER SHALL USE PRODUCTS AT PURCHASER’S SOLE RISK, EVEN IF ST HAS BEEN INFORMED IN WRITING OF SUCH USAGE, UNLESS A PRODUCT IS EXPRESSLY DESIGNATED BY ST AS BEING INTENDED FOR “AUTOMOTIVE, AUTOMOTIVE SAFETY OR MEDICAL” INDUSTRY DOMAINS ACCORDING TO ST PRODUCT DESIGN SPECIFICATIONS. PRODUCTS FORMALLY ESCC, QML OR JAN QUALIFIED ARE DEEMED SUITABLE FOR USE IN AEROSPACE BY THE CORRESPONDING GOVERNMENTAL AGENCY.

Resale of ST products with provisions different from the statements and/or technical features set forth in this document shall immediately void any warranty granted by ST for the ST product or service described herein and shall not create or extend in any manner whatsoever, any liability of ST.

ST and the ST logo are trademarks or registered trademarks of ST in various countries.
Information in this document supersedes and replaces all information previously supplied.
The ST logo is a registered trademark of STMicroelectronics. All other names are the property of their respective owners.

© 2013 STMicroelectronics - All rights reserved

STMicroelectronics group of companies

Australia - Belgium - Brazil - Canada - China - Czech Republic - Finland - France - Germany - Hong Kong - India - Israel - Italy - Japan - Malaysia - Malta - Morocco - Philippines - Singapore - Spain - Sweden - Switzerland - United Kingdom - United States of America

www.st.com