STL18N65M2

N-channel 650 V, 0.290 Ω typ., 8 A MDmesh™ M2 Power MOSFET in a PowerFLAT™ 5x6 HV package

Datasheet - preliminary data

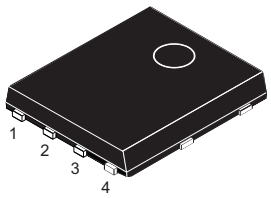

PowerFLAT™ 5x6 HV

Figure 1. Internal schematic diagram

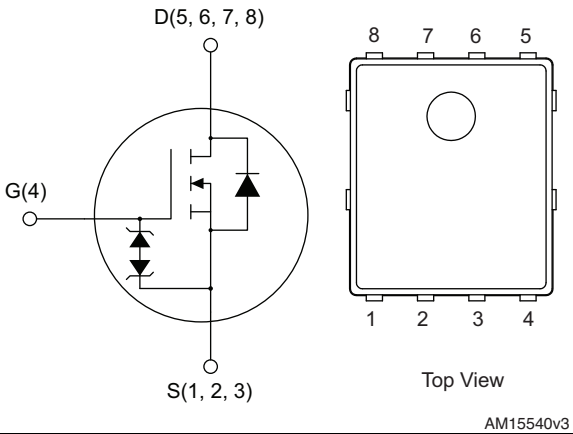

Features

Order codes	V_{DS} @ T_{Jmax}	$R_{DS(on)}$ max	I_D
STL18N65M2	715 V	0.365 Ω	8 A

- Extremely low gate charge
- Excellent output capacitance (C_{OSS}) profile
- 100% avalanche tested
- Zener-protected

Applications

- Switching applications

Description

This device is an N-channel Power MOSFET developed using MDmesh™ M2 technology. Thanks to its strip layout and an improved vertical structure, the device exhibits low on-resistance and optimized switching characteristics, rendering it suitable for the most demanding high efficiency converters.

Table 1. Device summary

Order codes	Marking	Package	Packaging
STL18N65M2	18N65M2	PowerFLAT™ 5x6 HV	Tape and reel

This is preliminary information on a new product now in development or undergoing evaluation. Details are subject to change without notice.

www.st.com

Contents

1 Electrical ratings 3

2 Electrical characteristics 4

3 Test circuits 6

4 Package mechanical data 7

5 Packaging mechanical data 11

6 Revision history 13

1 Electrical ratings

Table 2. Absolute maximum ratings

Symbol	Parameter	Value	Unit
V_{GS}	Gate-source voltage	± 25	V
I_D (1)	Drain current (continuous) at T_C = 25 °C	8	A
I_D (1)	Drain current (continuous) at T_C = 100 °C	5	A
I_{DM} (2)	Drain current (pulsed)	32	A
P_{TOT}	Total dissipation at T_C = 25 °C	57	W
I_{AR}	Avalanche current, repetitive or not-repetitive (pulse width limited by T_j max)	1.8	A
E_{AS}	Single pulse avalanche energy (starting T_j = 25 °C, I_D = I_{AR}, V_{DD} = 50 V)	120	mJ
dv/dt (3)	Peak diode recovery voltage slope	15	V/ns
dv/dt (4)	MOSFET dv/dt ruggedness	50	V/ns
T_{stg}	Storage temperature	- 55 to 150	°C
T_j	Max. operating junction temperature	150	°C

1. The value is rated according to $R_{thj\text{-}case}$ and limited by package
2. Pulse width limited by safe operating area
3. $I_{SD} \leq 8$ A, di/dt ≤ 400 A/µs, $V_{DSpeak} \leq V_{(BR)DSS}$, V_{DD} = 80% $V_{(BR)DSS}$
4. $V_{DS} \leq 520$ V

Table 3. Thermal data

Symbol	Parameter	Value	Unit
$R_{thj\text{-}case}$	Thermal resistance junction-case max	2.2	°C/W
$R_{thj\text{-}amb}$ (1)	Thermal resistance junction-amb max	59	°C/W

1. When mounted on 1inch² FR-4 board, 2 oz Cu

2 Electrical characteristics

(T_C = 25 °C unless otherwise specified)

Table 4. On /off states

Symbol	Parameter	Test conditions	Min.	Typ.	Max.	Unit
$V_{(BR)DSS}$	Drain-source breakdown voltage	I_D = 1 mA, V_{GS} = 0	650			V
I_{DSS}	Zero gate voltage drain current (V_{GS} = 0)	V_{DS} = 650 V			1	µA
		V_{DS} = 650 V, T_C= 125 °C			100	µA
I_{GSS}	Gate-body leakage current (V_{DS} = 0)	V_{GS} = ± 25 V			±10	nA
$V_{GS(th)}$	Gate threshold voltage	V_{DS} = V_{GS}, I_D = 250 µA	2	3	4	V
$R_{DS(on)}$	Static drain-source on-resistance	V_{GS} = 10 V, I_D = 4 A		0.290	0.365	Ω

Table 5. Dynamic

Symbol	Parameter	Test conditions	Min.	Typ.	Max.	Unit
C_{iss}	Input capacitance	V_{DS} = 100 V, f = 1 MHz, V_{GS} = 0	-	764	-	pF
C_{oss}	Output capacitance		-	35.5	-	pF
C_{rss}	Reverse transfer capacitance		-	1.2	-	pF
$C_{oss\ eq.}$ (1)	Output equivalent capacitance	V_{DS} = 0 to 520 V, V_{GS} = 0	-	175.5	-	pF
R_G	Intrinsic gate resistance	f = 1 MHz open drain	-	6	-	Ω
Q_g	Total gate charge	V_{DD} = 520 V, I_D = 12 A, V_{GS} = 10 V (see *Figure 3*)	-	21.5	-	nC
Q_{gs}	Gate-source charge		-	3.2	-	nC
Q_{gd}	Gate-drain charge		-	11.3	-	nC

1. $C_{oss\ eq.}$ is defined as a constant equivalent capacitance giving the same charging time as C_{oss} when V_{DS} increases from 0 to 80% V_{DS}.

Table 6. Switching times

Symbol	Parameter	Test conditions	Min.	Typ.	Max	Unit
$t_{d(on)}$	Turn-on delay time	V_{DD} = 325 V, I_D = 6.5 A, R_G = 4.7 Ω, V_{GS} = 6 V (see *Figure 7*)	-	11	-	ns
t_r	Rise time		-	7.5	-	ns
$t_{d(off)}$	Turn-on delay time		-	46	-	ns
t_f	Fall time		-	12.5	-	ns

Table 7. Source drain diode

Symbol	Parameter	Test conditions	Min.	Typ.	Max.	Unit
I_{SD}	Source-drain current		-		8	A
I_{SDM} (1)	Source-drain current (pulsed)		-		32	A
V_{SD} (2)	Forward on voltage	I_{SD} = 8 A, V_{GS} = 0	-		1.6	V
t_{rr}	Reverse recovery time	I_{SD} = 12 A, di/dt = 100 A/µs V_{DD} = 60 V (see *Figure 4*)	-	331		ns
Q_{rr}	Reverse recovery charge		-	3.4		µC
I_{RRM}	Reverse recovery current		-	20.5		A
t_{rr}	Reverse recovery time	V_{DD} = 60 V di/dt = 100 A/µs, I_{SD} = 12 A T_j=150 °C (see *Figure 4*)	-	462		ns
Q_{rr}	Reverse recovery charge		-	4.6		µC
I_{RRM}	Reverse recovery current		-	20		A

1. Pulse width limited by safe operating area.
2. Pulsed: pulse duration = 300 µs, duty cycle 1.5%

3 Test circuits

Figure 2. Switching times test circuit for resistive load

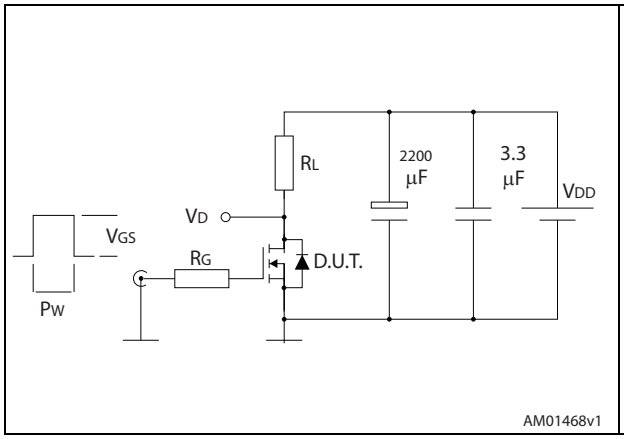

Figure 3. Gate charge test circuit

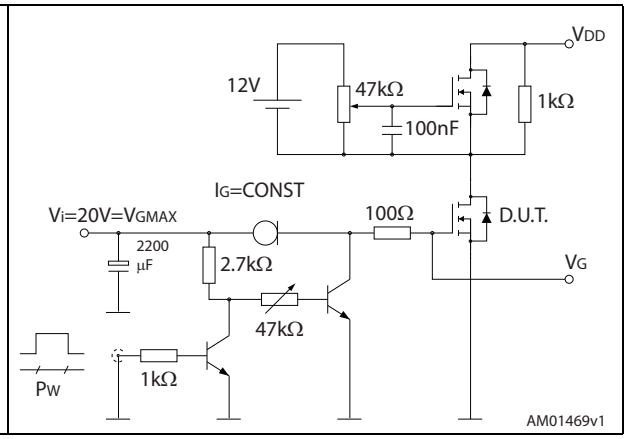

Figure 4. Test circuit for inductive load switching and diode recovery times

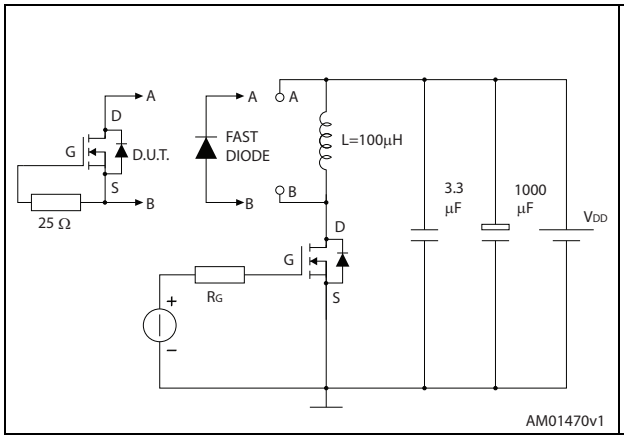

Figure 5. Unclamped inductive load test circuit

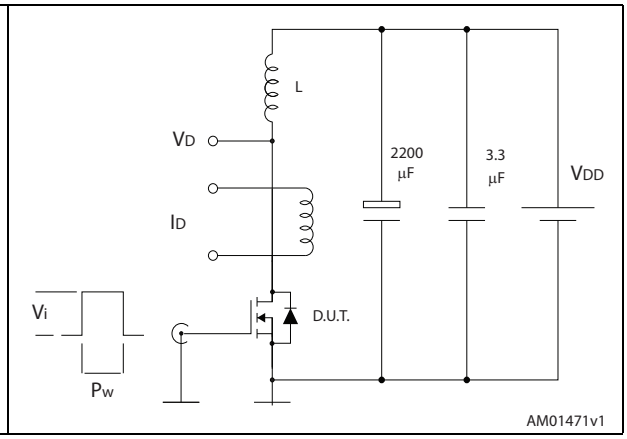

Figure 6. Unclamped inductive waveform

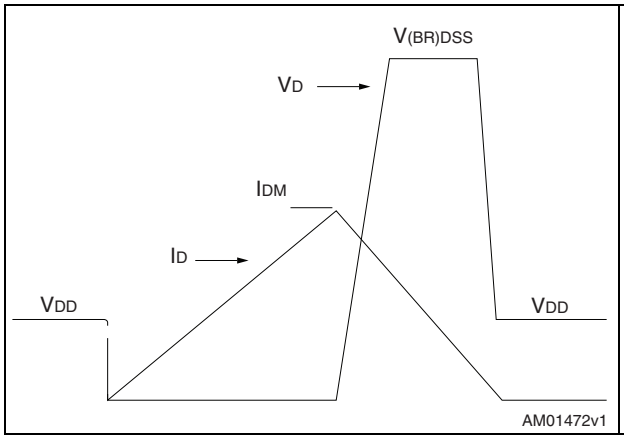

Figure 7. Switching time waveform

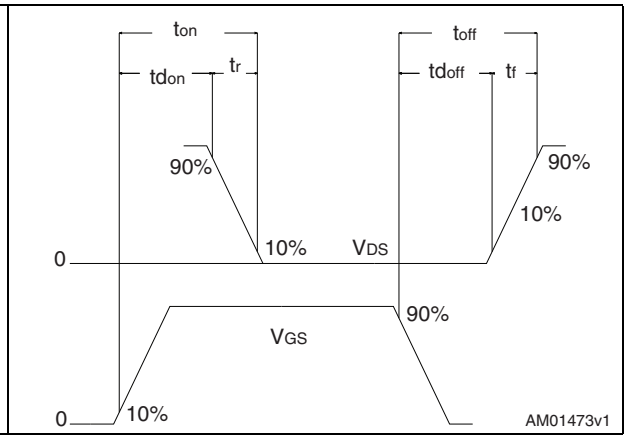

4 Package mechanical data

In order to meet environmental requirements, ST offers these devices in different grades of ECOPACK® packages, depending on their level of environmental compliance. ECOPACK® specifications, grade definitions and product status are available at: *www.st.com*. ECOPACK® is an ST trademark.

Figure 8. PowerFLAT™ 5x6 HV drawing

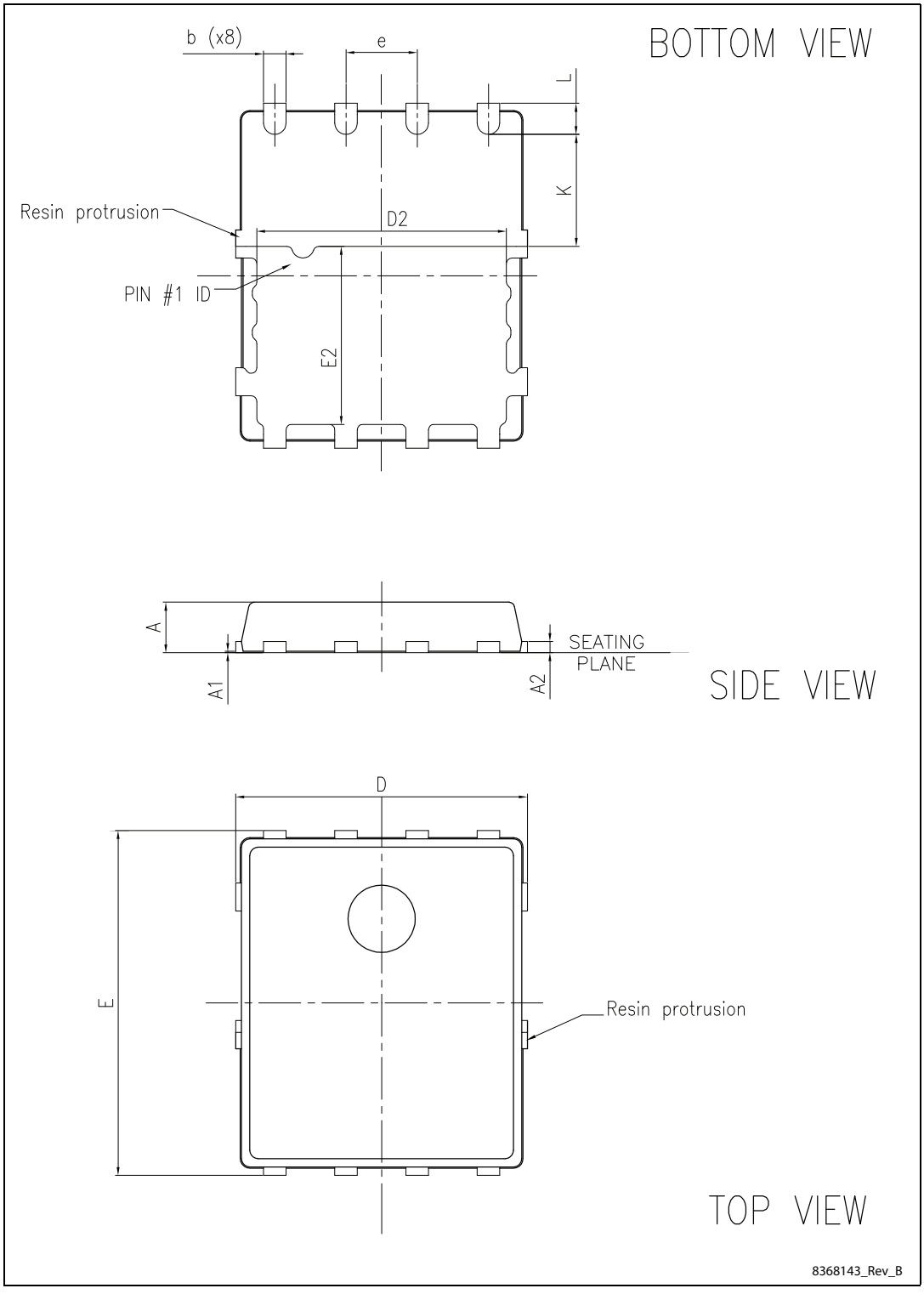

Table 8. PowerFLAT™ 5x6 HV mechanical data

Dim.	mm		
	Min.	Typ.	Max.
A	0.80		1.00
A1	0.02		0.05
A2		0.25	
b	0.30		0.50
D	5.00	5.20	5.40
E	5.95	6.15	6.35
D2	4.30	4.40	4.50
E2	3.10	3.20	3.30
e		1.27	
L	0.50	0.55	0.60
K	1.90	2.00	2.10

Figure 9. PowerFLAT™ 5x6 HV recommended footprint (dimensions are in mm)

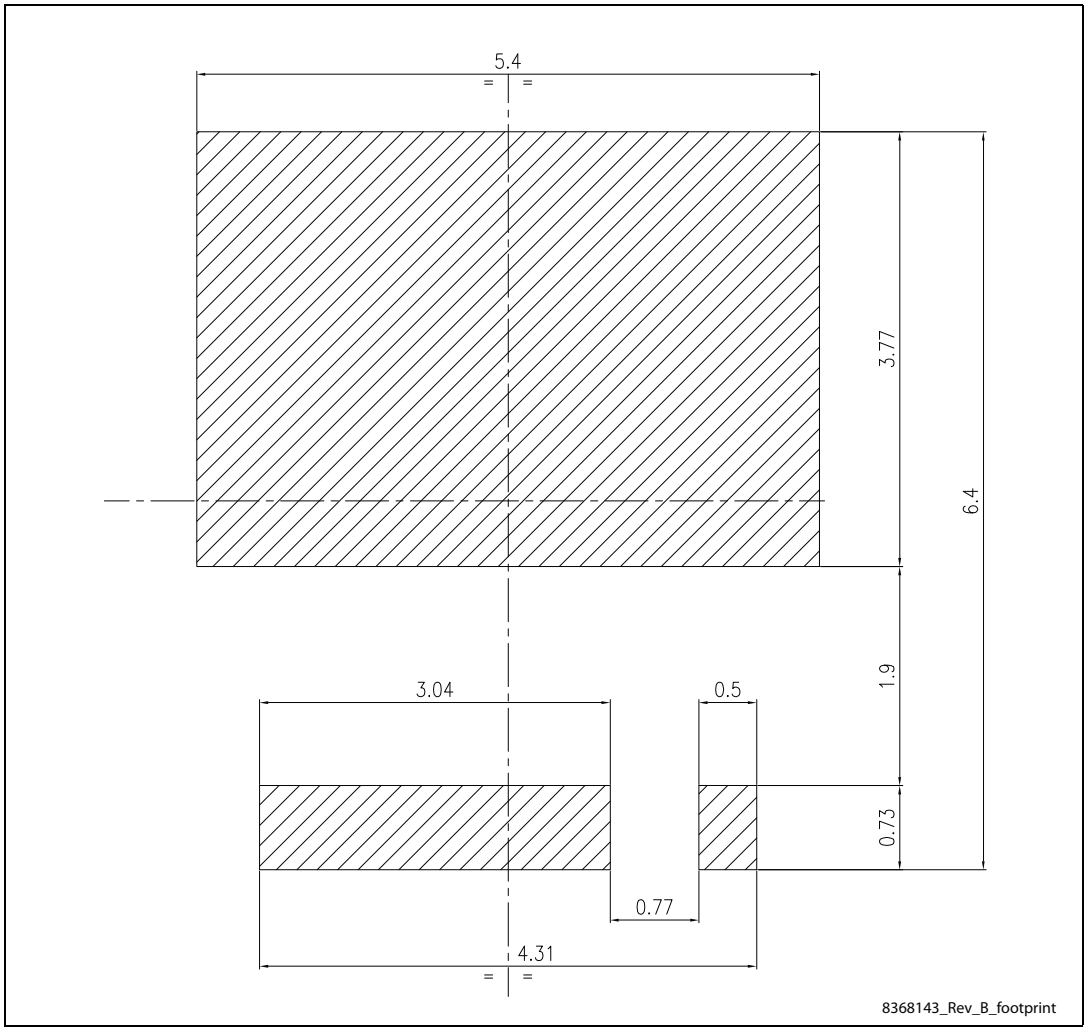

5 Packaging mechanical data

Figure 10. PowerFLAT™ 5x6 tape[(a)]

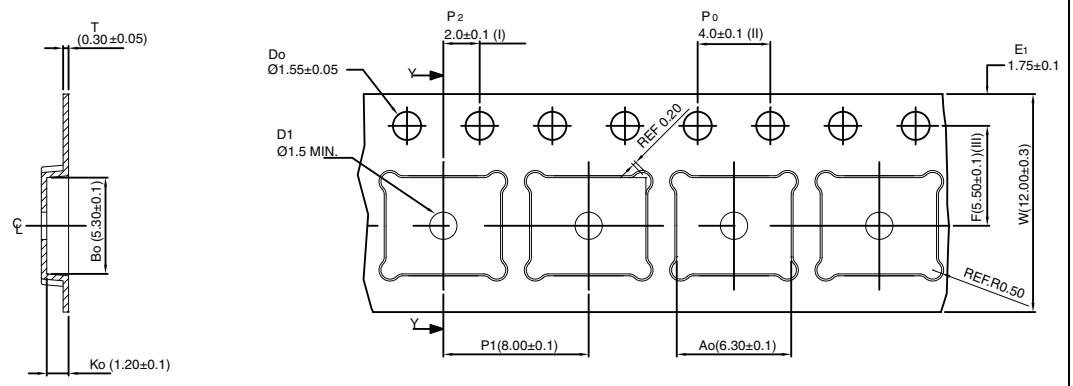

(I) Measured from centerline of sprocket hole to centerline of pocket.

(II) Cumulative tolerance of 10 sprocket holes is ± 0.20 .

(III) Measured from centerline of sprocket hole to centerline of pocket.

Base and bulk quantity 3000 pcs

8234350_Tape_rev_C

Figure 11. PowerFLAT™ 5x6 package orientation in carrier tape

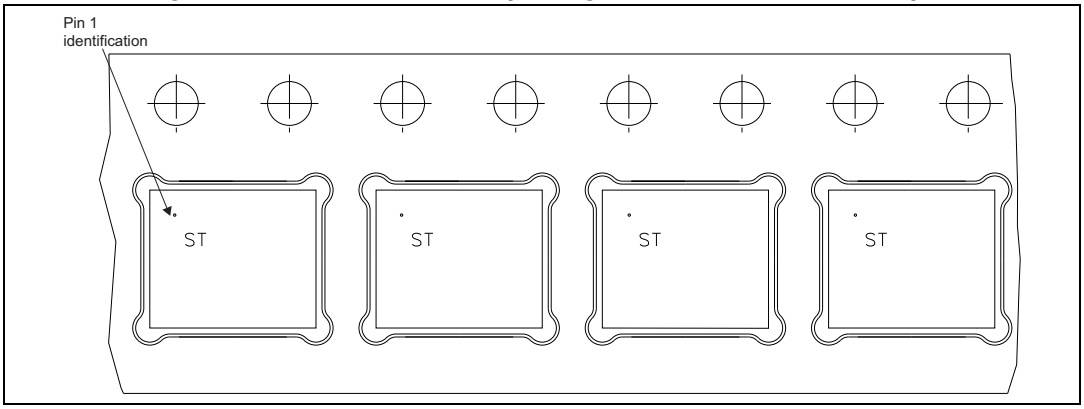

a. All dimensions are in millimeters.

Figure 12. PowerFLAT™ 5x6 reel

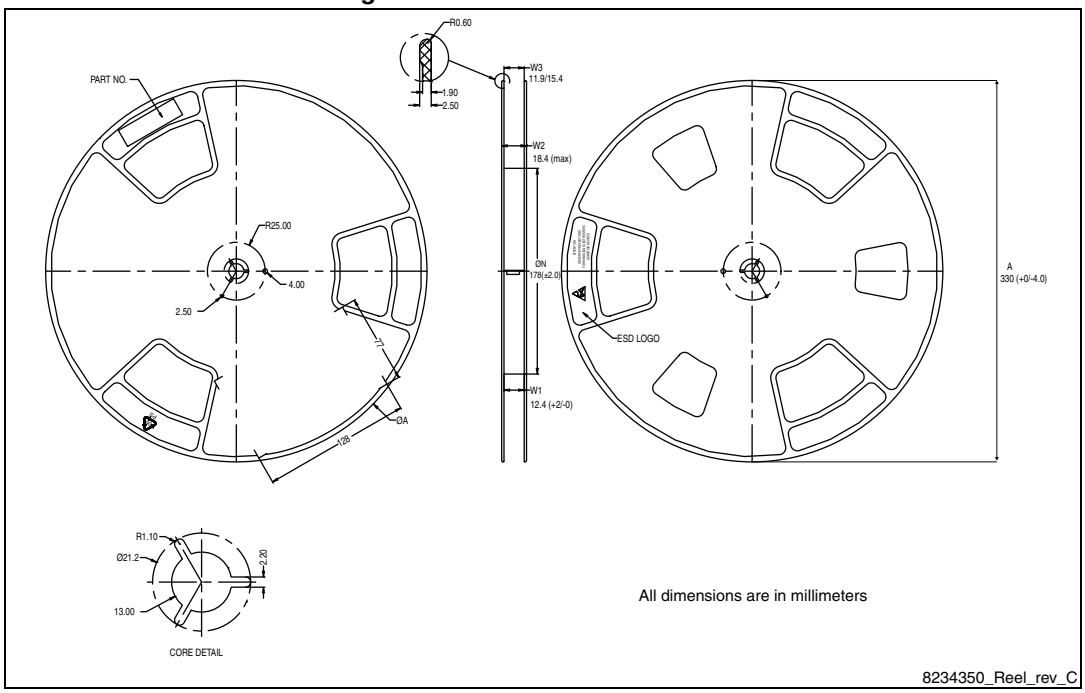

6 Revision history

Table 9. Document revision history

Date	Revision	Changes
14-Mar-2014	1	First release.
25-Mar-2014	2	Updated title and features on cover page. Updated *Table 4: On /off states* and *Table 5: Dynamic* Inserted P_{TOT} value in *Table 2: Absolute maximum ratings*. Minor text changes.
02-Oct-2014	3	Updated values in *Table 2: Absolute maximum ratings*, *Table 4: On /off states*, *Table 5: Dynamic*, *Table 6: Switching times* and *Table 7: Source drain diode*. Updated title, features and description in cover page. Minor text changes.

IMPORTANT NOTICE – PLEASE READ CAREFULLY

STMicroelectronics NV and its subsidiaries (“ST”) reserve the right to make changes, corrections, enhancements, modifications, and improvements to ST products and/or to this document at any time without notice. Purchasers should obtain the latest relevant information on ST products before placing orders. ST products are sold pursuant to ST’s terms and conditions of sale in place at the time of order acknowledgement.

Purchasers are solely responsible for the choice, selection, and use of ST products and ST assumes no liability for application assistance or the design of Purchasers’ products.

No license, express or implied, to any intellectual property right is granted by ST herein.

Resale of ST products with provisions different from the information set forth herein shall void any warranty granted by ST for such product.

ST and the ST logo are trademarks of ST. All other product or service names are the property of their respective owners.

Information in this document supersedes and replaces information previously supplied in any prior versions of this document.

© 2014 STMicroelectronics – All rights reserved