STL16N65M2

N-channel 650 V, 0.325 Ω typ., 7.5 A MDmesh M2 Power MOSFET in a PowerFLAT™ 5x6 HV package

Datasheet – production data

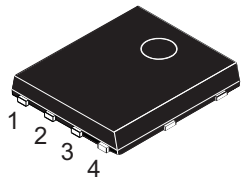

PowerFLAT™ 5x6 HV

Figure 1. Internal schematic diagram

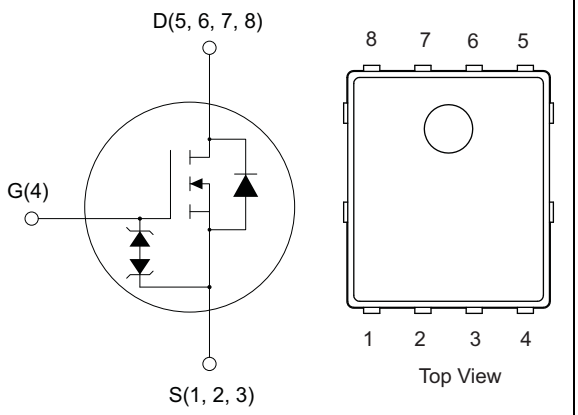

Features

Order code	V_{DS} @ T_{Jmax}	$R_{DS(on)}$ max	I_D
STL16N65M2	710 V	0.395 Ω	7.5 A

- Extremely low gate charge
- Excellent output capacitance (C_{oss}) profile
- 100% avalanche tested
- Zener-protected

Applications

- Switching applications

Description

This device is an N-channel Power MOSFET developed using MDmesh™ M2 technology. Thanks to its strip layout and an improved vertical structure, the device exhibits low on-resistance and optimized switching characteristics, rendering it suitable for the most demanding high efficiency converters.

Table 1. Device summary

Order codes	Marking	Package	Packaging
STL16N65M2	16N65M2	PowerFLAT™ 5x6 HV	Tape and reel

This is information on a product in full production. www.st.com

Contents

1 Electrical ratings 3

2 Electrical characteristics 4

2.1 Electrical characteristics (curves) 6

3 Test circuits 8

4 Package mechanical data 9

5 Packaging mechanical data 13

6 Revision history 15

1 Electrical ratings

Table 2. Absolute maximum ratings

Symbol	Parameter	Value	Unit
V_{GS}	Gate-source voltage	± 25	V
I_D	Drain current (continuous) at T_C = 25 °C	7.5	A
I_D	Drain current (continuous) at T_C = 100 °C	4.7	A
I_{DM} (1)	Drain current (pulsed)	30	A
P_{TOT}	Total dissipation at T_C = 25 °C	56	W
dv/dt (2)	Peak diode recovery voltage slope	15	V/ns
dv/dt (3)	MOSFET dv/dt ruggedness	50	V/ns
T_{stg}	Storage temperature	- 55 to 150	°C
T_j	Max. operating junction temperature		

1. Pulse width limited by safe operating area.
2. $I_{SD} \leq 7.5$ A, di/dt ≤ 400 A/µs; $V_{DS\ peak} < V_{(BR)DSS}$, V_{DD}=400 V.
3. $V_{DS} \leq 520$ V

Table 3. Thermal data

Symbol	Parameter	Value	Unit
$R_{thj\text{-}case}$	Thermal resistance junction-case max	2.23	°C/W
$R_{thj\text{-}pcb}$	Thermal resistance junction-pcb max(1)	59	°C/W

1. When mounted on 1 inch² FR-4, 2 Oz copper board

Table 4. Avalanche characteristics

Symbol	Parameter	Value	Unit
I_{AR}	Avalanche current, repetitive or not repetitive (pulse width limited by T_{jmax})	1.5	A
E_{AS}	Single pulse avalanche energy (starting T_j=25°C, I_D= I_{AR}; V_{DD}=50)	115	mJ

2 Electrical characteristics

(T_C = 25 °C unless otherwise specified)

Table 5. On /off states

Symbol	Parameter	Test conditions	Min.	Typ.	Max.	Unit
$V_{(BR)DSS}$	Drain-source breakdown voltage	V_{GS} = 0, I_D = 1 mA	650			V
I_{DSS}	Zero gate voltage drain current	V_{GS} = 0, V_{DS} = 650 V			1	µA
		V_{GS} = 0, V_{DS} = 650 V, T_C=125 °C			100	µA
I_{GSS}	Gate-body leakage current	V_{DS} = 0, V_{GS} = ± 25 V			±10	µA
$V_{GS(th)}$	Gate threshold voltage	V_{DS} = V_{GS}, I_D = 250 µA	2	3	4	V
$R_{DS(on)}$	Static drain-source on-resistance	V_{GS} = 10 V, I_D = 3.5 A		0.325	0.395	Ω

Table 6. Dynamic

Symbol	Parameter	Test conditions	Min.	Typ.	Max.	Unit
C_{iss}	Input capacitance	V_{GS} = 0, V_{DS} = 100 V, f = 1 MHz	-	718	-	pF
C_{oss}	Output capacitance		-	32	-	pF
C_{rss}	Reverse transfer capacitance		-	1.1	-	pF
$C_{oss\ eq.}$ (1)	Equivalent output capacitance	V_{GS} = 0, V_{DS} = 0 to 520 V	-	189	-	pF
R_G	Intrinsic gate resistance	f = 1 MHz open drain	-	5.2	-	Ω
Q_g	Total gate charge	V_{DD} = 520 V, I_D = 11 A, V_{GS} = 10 V (see *Figure 15*)	-	19.5	-	nC
Q_{gs}	Gate-source charge		-	4	-	nC
Q_{gd}	Gate-drain charge		-	8.3	-	nC

1. $C_{oss\ eq.}$ is defined as a constant equivalent capacitance giving the same charging time as C_{oss} when V_{DS} increases from 0 to 80% V_{DSS}

Table 7. Switching times

Symbol	Parameter	Test conditions	Min.	Typ.	Max.	Unit
$t_{d(on)}$	Turn-on delay time	V_{DD} = 325 V, I_D = 5.5 A, R_G = 4.7 Ω, V_{GS} = 10 V (see *Figure 14* and *19*)	-	11.3	-	ns
t_r	Rise time		-	8.2	-	ns
$t_{d(off)}$	Turn-off delay time		-	36	-	ns
t_f	Fall time		-	11.3	-	ns

Table 8. Source drain diode

Symbol	Parameter	Test conditions	Min.	Typ.	Max.	Unit
I_{SD}	Source-drain current		-		7.5	A
I_{SDM} (1)	Source-drain current (pulsed)		-		30	A
V_{SD} (2)	Forward on voltage	V_{GS} = 0, I_{SD} = 11 A	-		1.6	V
t_{rr}	Reverse recovery time	I_{SD} = 11 A, di/dt = 100 A/µs V_{DD} = 60 V (see *Figure 16*)	-	342		ns
Q_{rr}	Reverse recovery charge		-	3.5		µC
I_{RRM}	Reverse recovery current		-	20.4		A
t_{rr}	Reverse recovery time	I_{SD} = 11 A, di/dt = 100 A/µs V_{DD} = 60 V, T_j=150 °C (see *Figure 16*)	-	458		ns
Q_{rr}	Reverse recovery charge		-	4.6		µC
I_{RRM}	Reverse recovery current		-	20.5		A

1. Pulse width limited by safe operating area
2. Pulsed: pulse duration = 300 µs, duty cycle 1.5%

2.1 Electrical characteristics (curves)

Figure 2. Safe operating area

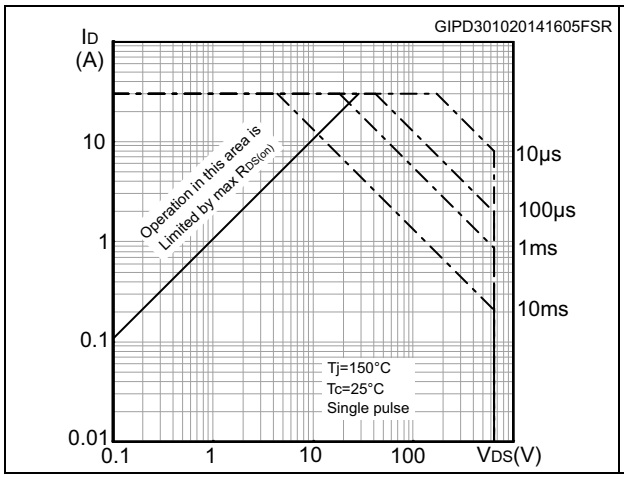

Figure 3. Thermal impedance

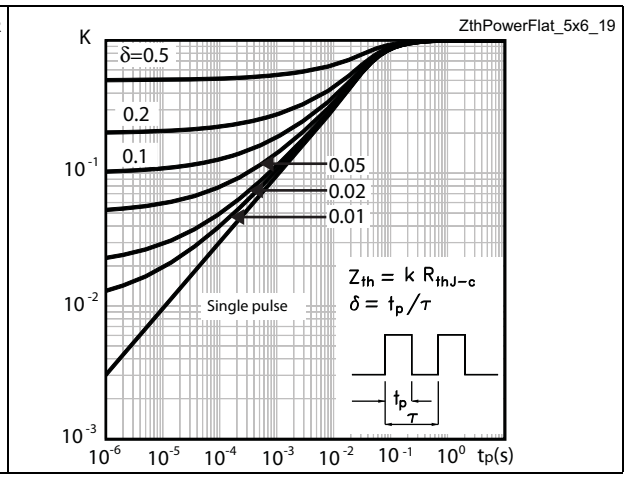

Figure 4. Output characteristics

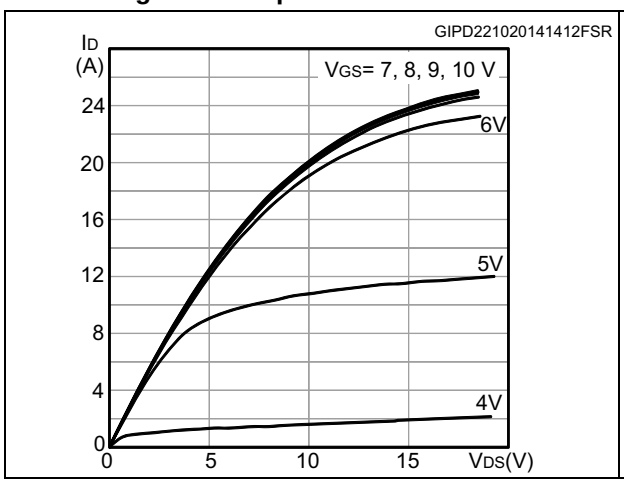

Figure 5. Transfer characteristics

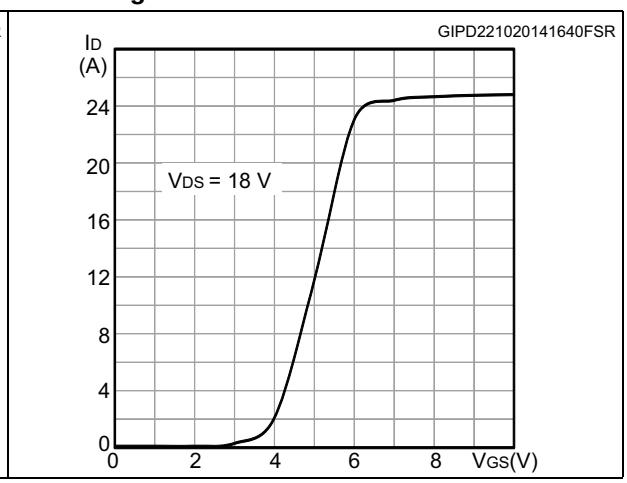

Figure 6. Normalized gate threshold voltage vs. temperature

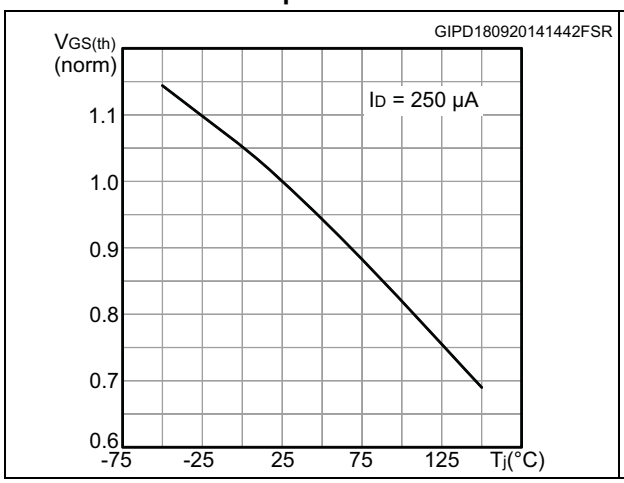

Figure 7. Normalized $V_{(BR)DSS}$ vs. temperature

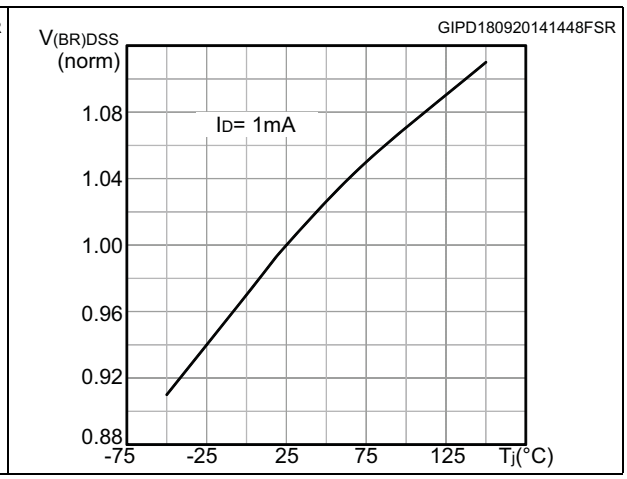

Figure 8. Static drain-source on-resistance

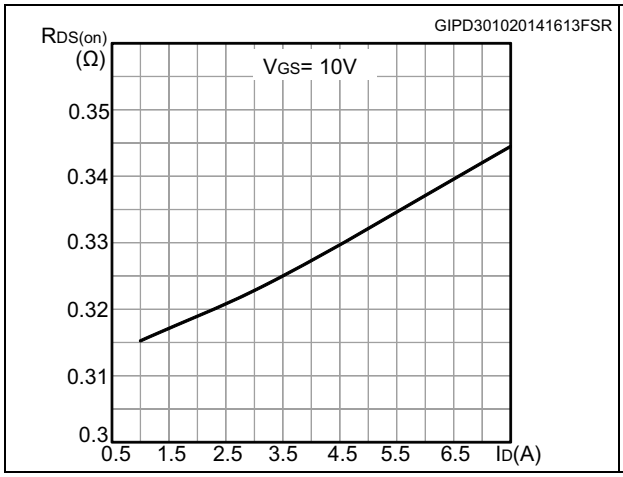

Figure 9. Normalized on-resistance vs. temperature

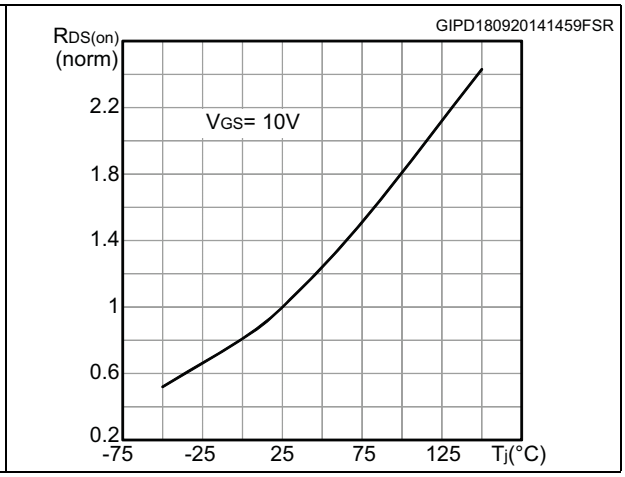

Figure 10. Gate charge vs. gate-source voltage

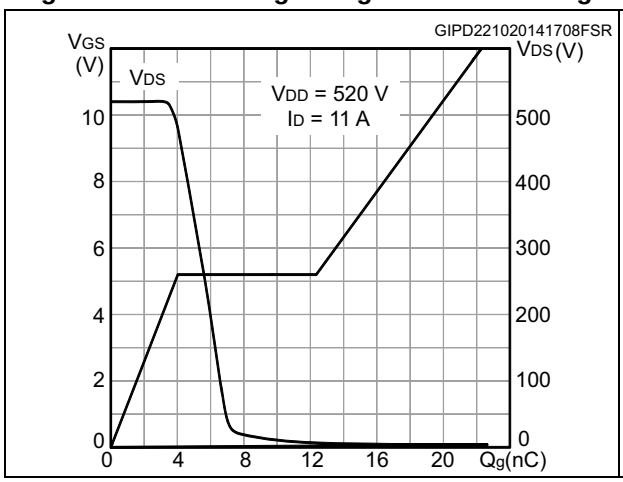

Figure 11. Capacitance variations

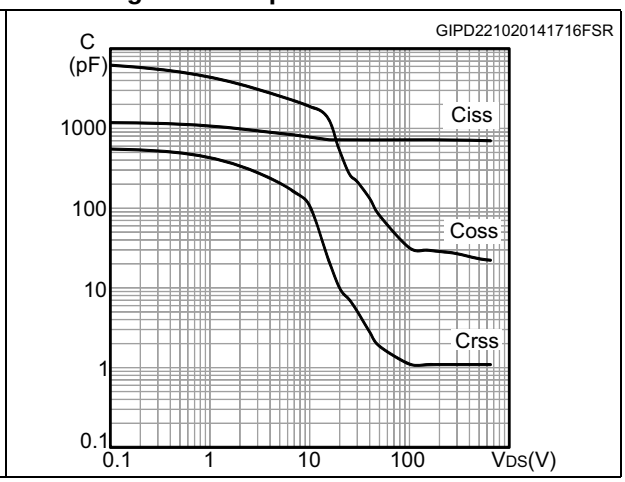

Figure 12. Output capacitance stored energy

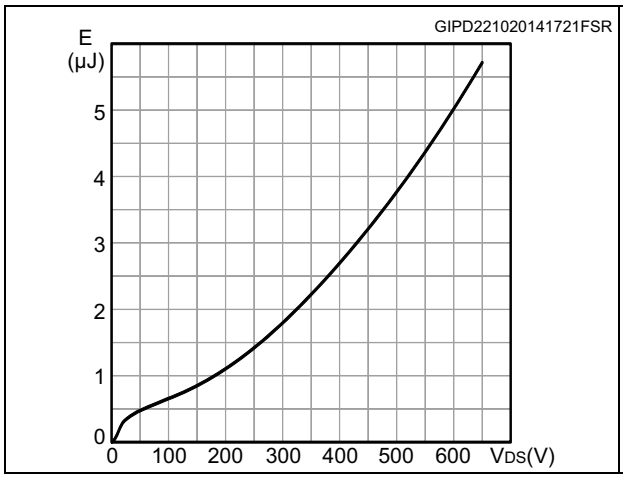

Figure 13. Source-drain diode forward characteristics

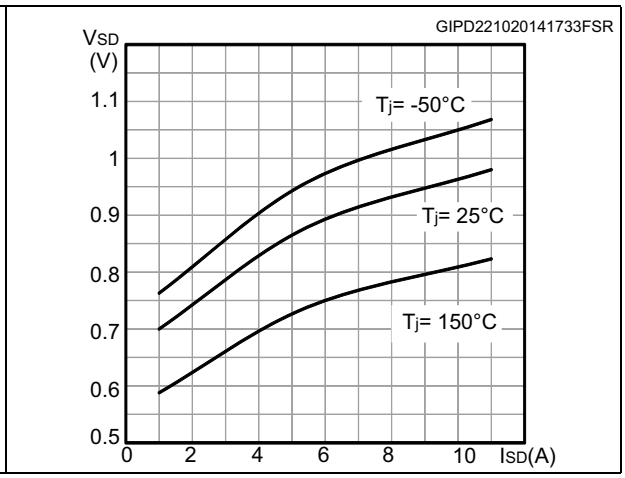

3 Test circuits

Figure 14. Switching times test circuit for resistive load

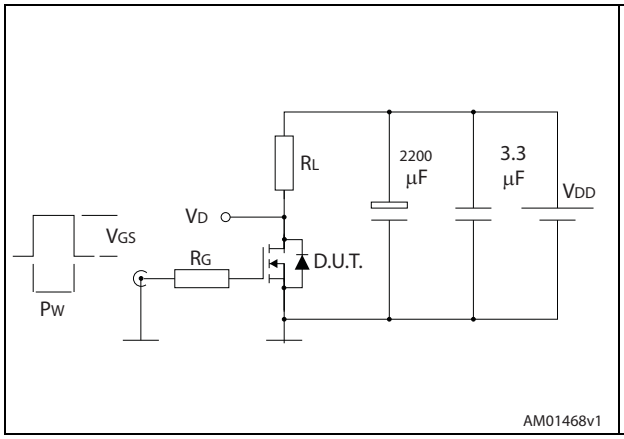

Figure 15. Gate charge test circuit

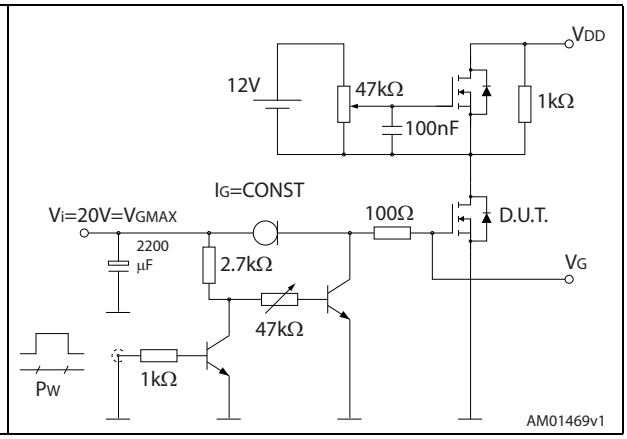

Figure 16. Test circuit for inductive load switching and diode recovery times

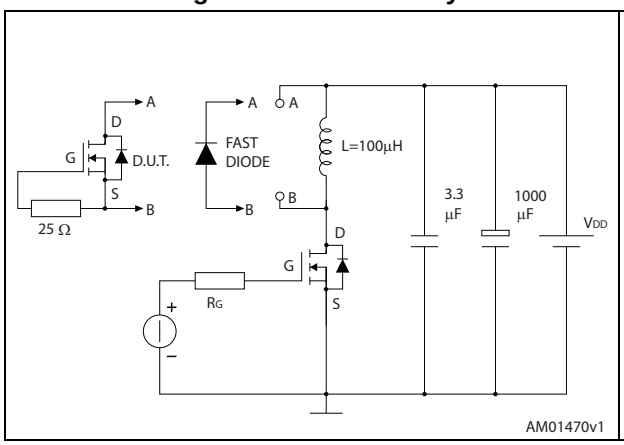

Figure 17. Unclamped inductive load test circuit

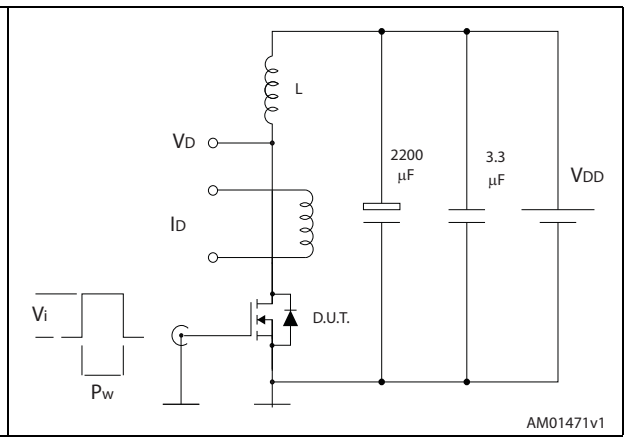

Figure 18. Unclamped inductive waveform

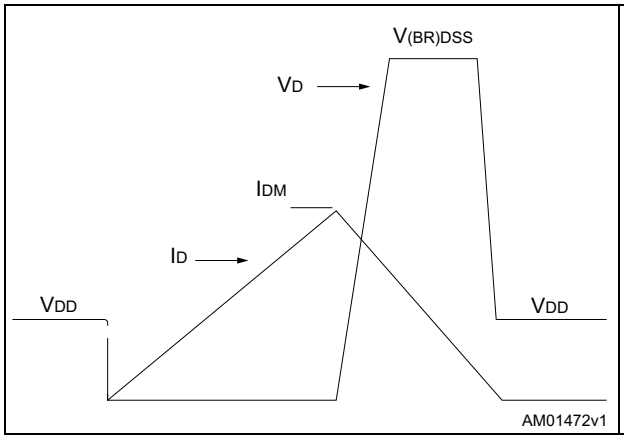

Figure 19. Switching time waveform

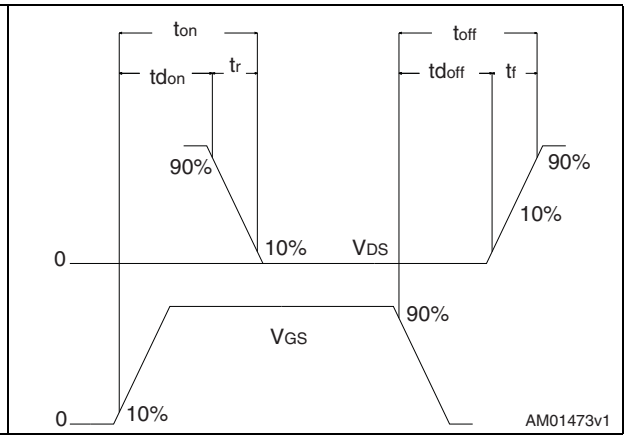

4 Package mechanical data

In order to meet environmental requirements, ST offers these devices in different grades of ECOPACK® packages, depending on their level of environmental compliance. ECOPACK® specifications, grade definitions and product status are available at: *www.st.com*.
ECOPACK® is an ST trademark.

Figure 20. PowerFLAT™ 5x6 HV drawing

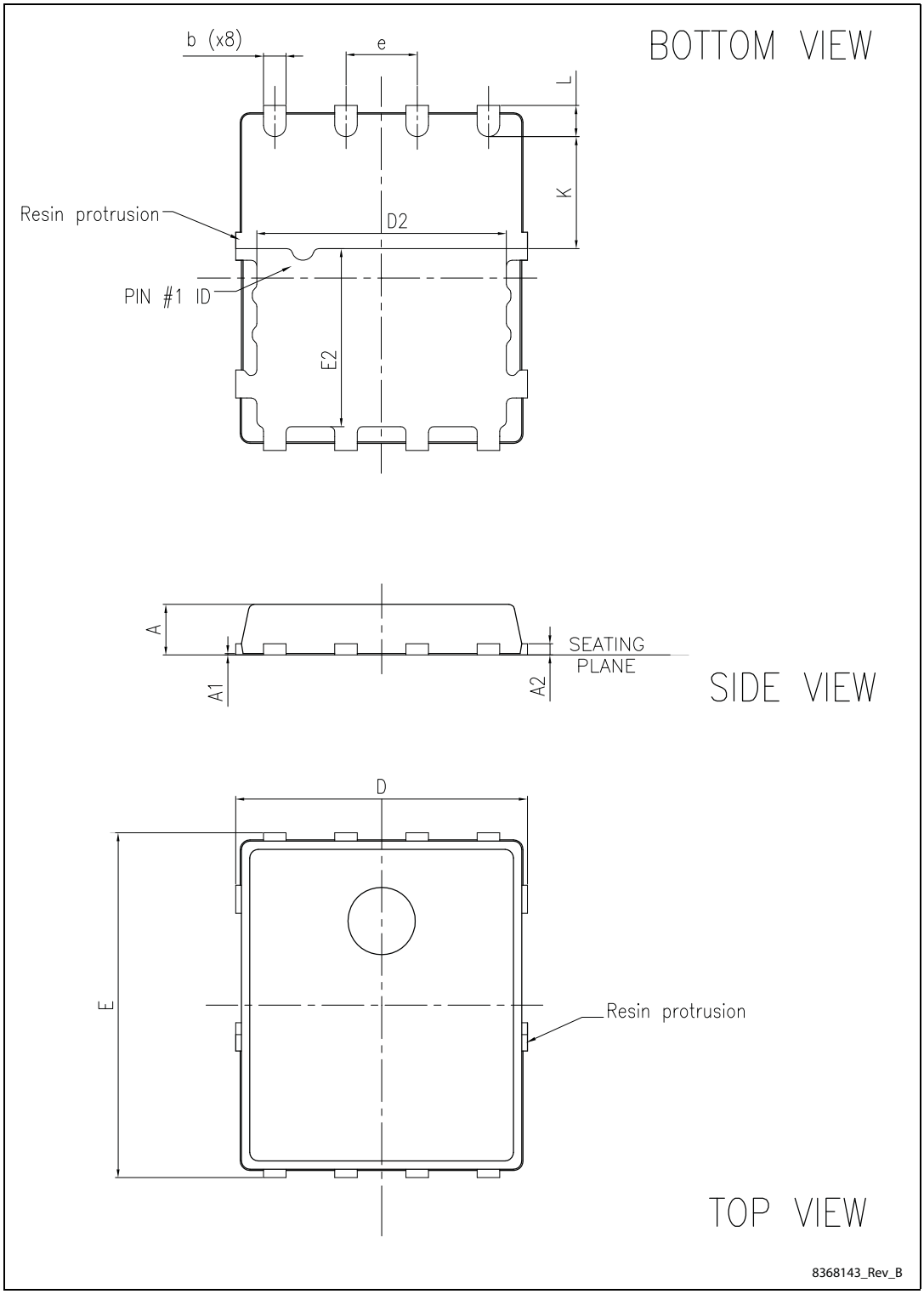

Table 9. PowerFLAT™ 5x6 HV mechanical data

Dim.	mm		
	Min.	Typ.	Max.
A	0.80		1.00
A1	0.02		0.05
A2		0.25	
b	0.30		0.50
D	5.00	5.20	5.40
E	5.95	6.15	6.35
D2	4.30	4.40	4.50
E2	3.10	3.20	3.30
e		1.27	
L	0.50	0.55	0.60
K	1.90	2.00	2.10

Figure 21. PowerFLAT™ 5x6 HV recommended footprint (dimensions are in mm)

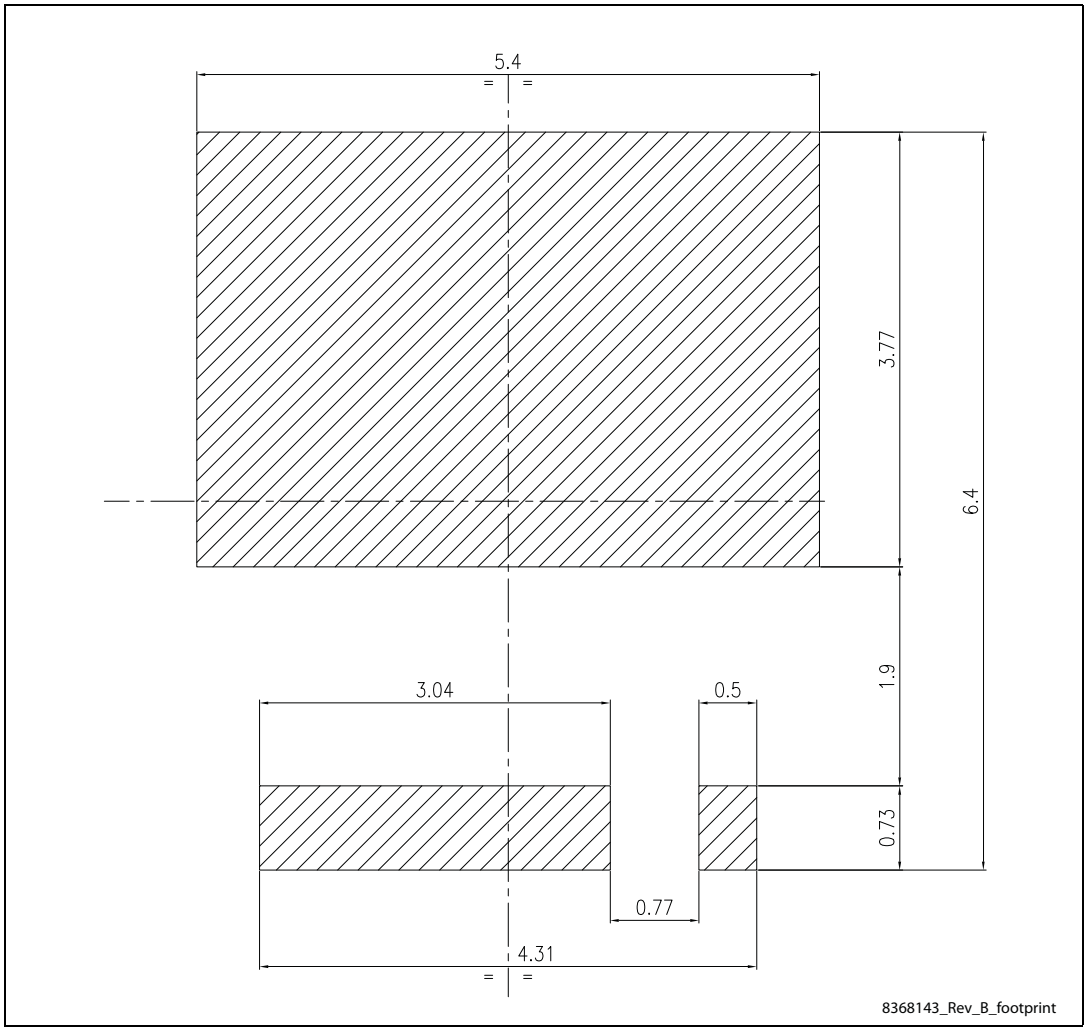

5 Packaging mechanical data

Figure 22. PowerFLAT™ 5x6 tape(a)

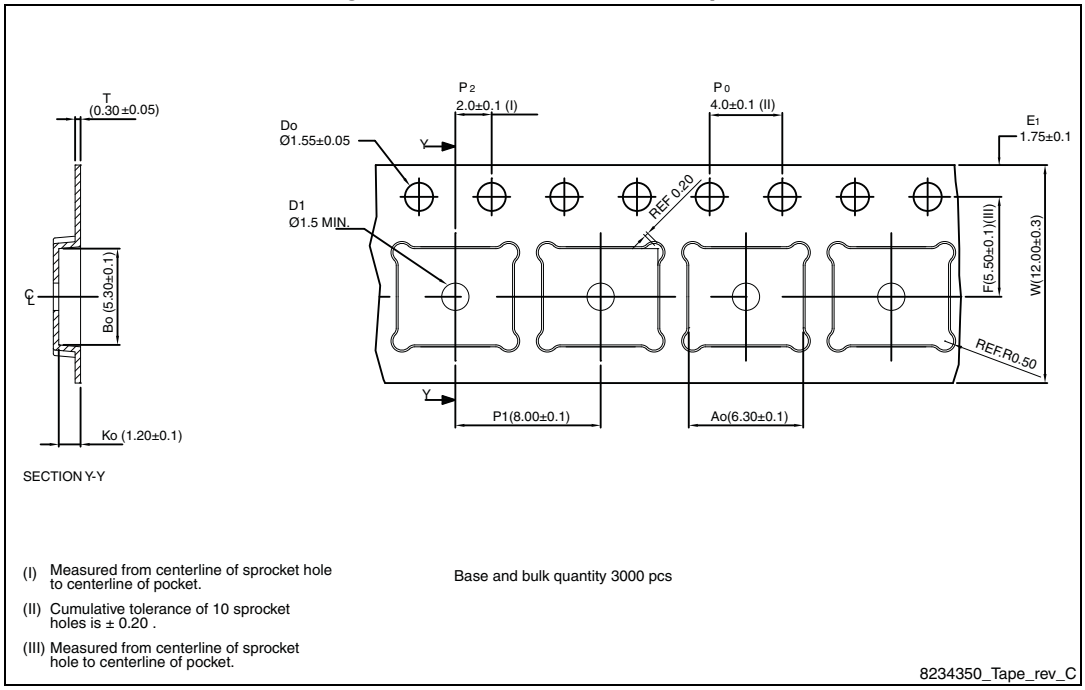

Figure 23. PowerFLAT™ 5x6 package orientation in carrier tape.

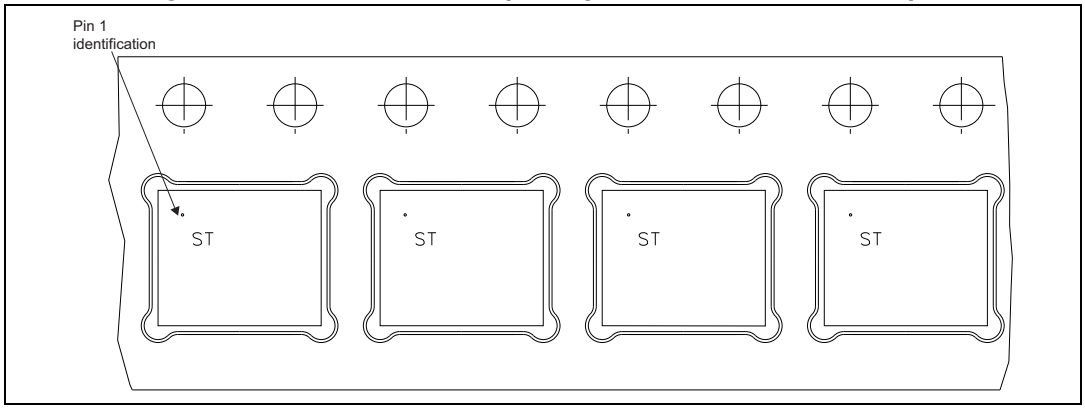

a. All dimensions are in millimeters.

Figure 24. PowerFLAT™ 5x6 reel

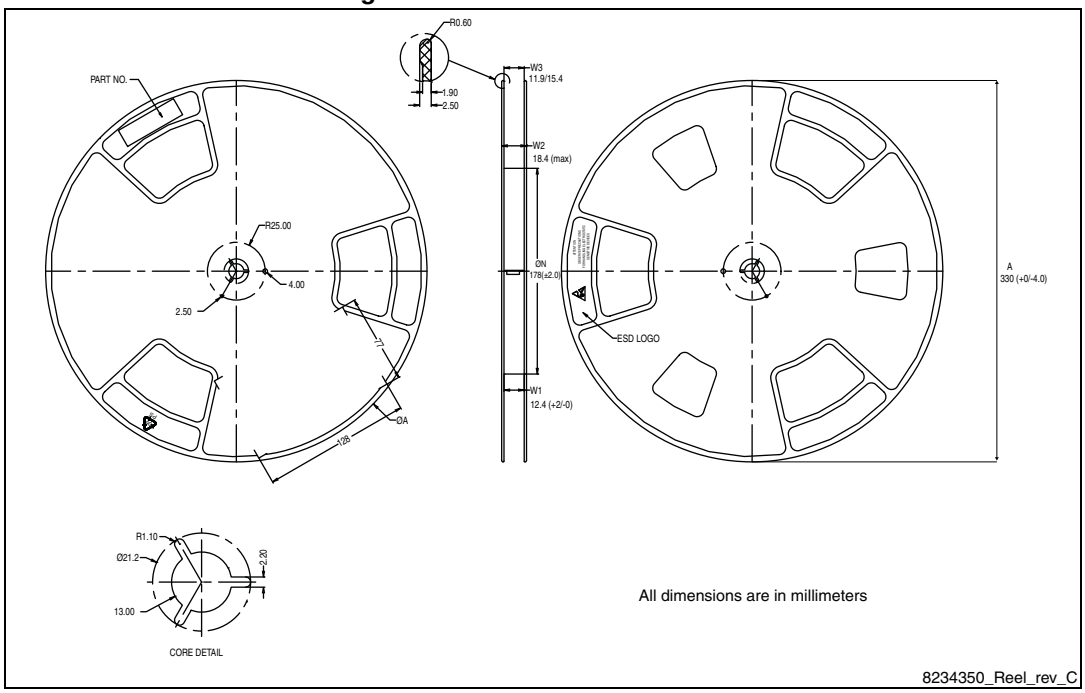

6 Revision history

Table 10. Document revision history

Date	Revision	Changes
31-Oct-2014	1	First release.

IMPORTANT NOTICE – PLEASE READ CAREFULLY

STMicroelectronics NV and its subsidiaries (“ST”) reserve the right to make changes, corrections, enhancements, modifications, and improvements to ST products and/or to this document at any time without notice. Purchasers should obtain the latest relevant information on ST products before placing orders. ST products are sold pursuant to ST’s terms and conditions of sale in place at the time of order acknowledgement.

Purchasers are solely responsible for the choice, selection, and use of ST products and ST assumes no liability for application assistance or the design of Purchasers’ products.

No license, express or implied, to any intellectual property right is granted by ST herein.

Resale of ST products with provisions different from the information set forth herein shall void any warranty granted by ST for such product.

ST and the ST logo are trademarks of ST. All other product or service names are the property of their respective owners.

Information in this document supersedes and replaces information previously supplied in any prior versions of this document.

© 2014 STMicroelectronics – All rights reserved