SOFT-TERMINAL

(vertical type, size 24 x 96 mm)

• Auxiliary device for the M-UNIT series Analog Backup Station (Model: AB2, MXAB) and Computer Backup Station (Model: CB2, MXCB)
• Easy manual operation with the front indicator
• Output indicator 4 – 20 mA
• AUTO/MANUAL Switch
• Manual operation with UP/DOWN switches
• Monitor terminal provided

MODEL: STL

ORDERING INFORMATION

• Code number: STL

PACKAGE INCLUDES...

• **Cable (1 meter; 3.3 ft) with connector**
Connector: Japan Solderless Terminal MFG.Co.Ltd VHR-10N
Lead wire: UL1007 AWG22 (with one end cut off)

GENERAL SPECIFICATIONS

Construction: Panel flush mounting
Connection
Connector: Japan Solderless Terminal MFG.Co.Ltd B10-PS-VH-GU
Housing material
Unit:
Material: SPCC
Coating: Melamine resin
Color: Black
Mounting bracket: SUS304
Selector Switch: AUTO/MANUAL
Isolation: Input to output
Monitor terminal: 4 – 20 mA DC monitor terminals

INPUT & OUTPUT

■ UP-DOWN COMMAND OPERATION BUTTON
AUTO-MANUAL SELECTOR SWITCH
Contact resistance: 0.05 Ω or less
Contact rating: 0.4 VA, 28 V max. for both input/output; operational voltage 20 mV – 28 V operational current 0.1 mA – 0.1 A
■ OUTPUT INDICATOR
Input: 4 – 20 mA DC
Input resistance: 20 Ω or less

INSTALLATION

Operating temperature: 0 to 40°C (32 to 104°F)
Operating humidity: 30 to 75 % RH (non-condensing)
Mounting: Panel flush mounting
Weight: 250 g (0.55 lb)

PERFORMANCE

Indicator accuracy: Class 2.5
Insulation resistance: ≥ 100 MΩ with 500 V DC
Dielectric strength: 1500 V AC @1 minute (input or output to ground)

EXTERNAL VIEW

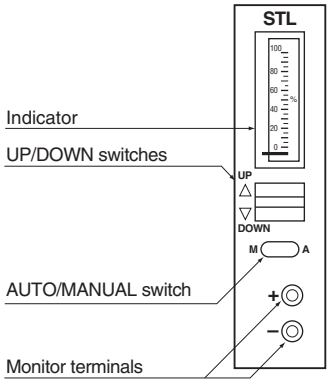

EXTERNAL DIMENSIONS unit: mm (inch)

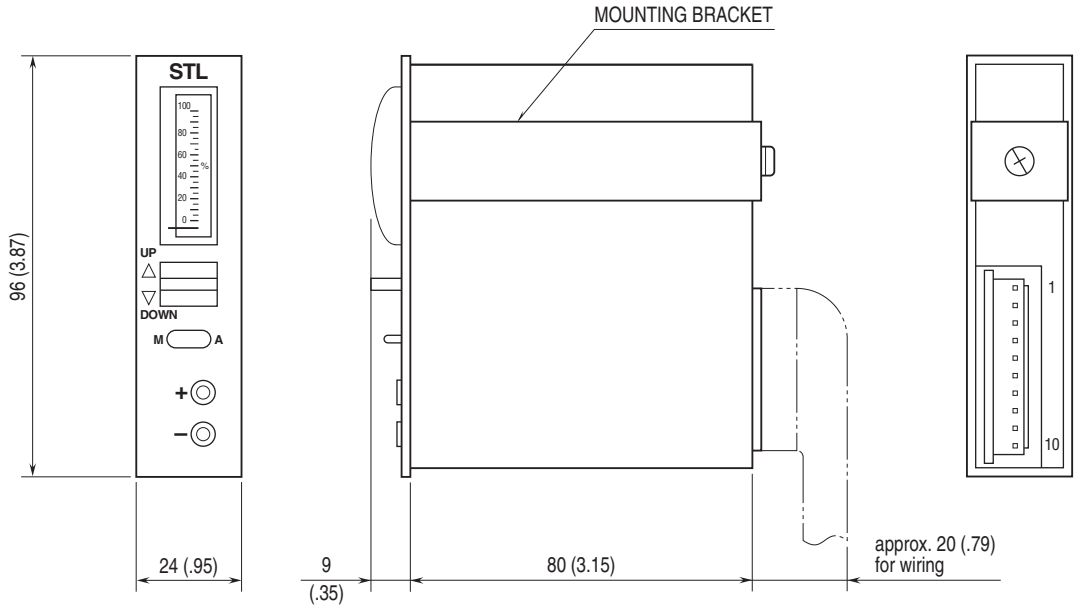

• Cable with connector

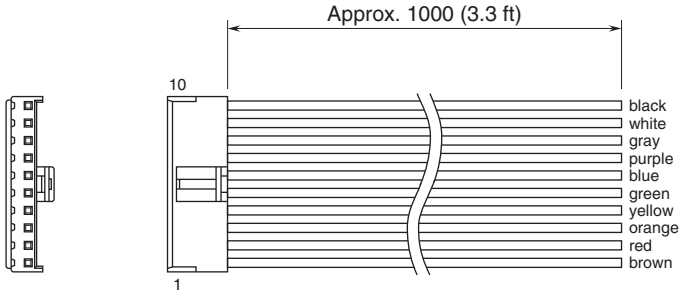

* One end of the cable is cut off.

PANEL CUTOUT unit: mm (inch)

Panel thickness: 0.5 to 6 (.02″ to .24″)

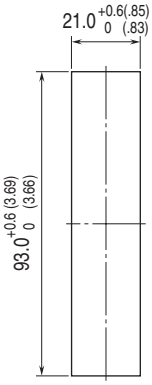

SCHEMATIC CIRCUITRY & CONNECTION DIAGRAM

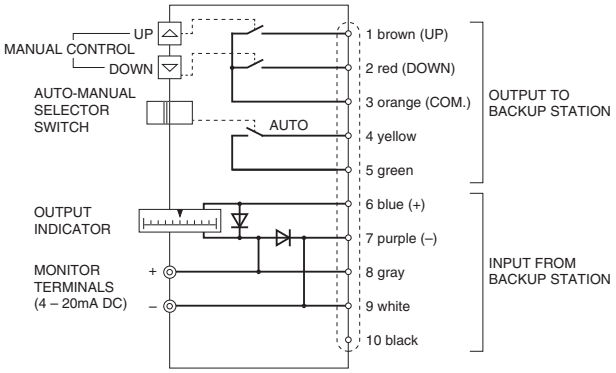

⚠ Specifications are subject to change without notice.