ON Semiconductor®

Test Procedure for the STK682-010GEVB Evaluation Board

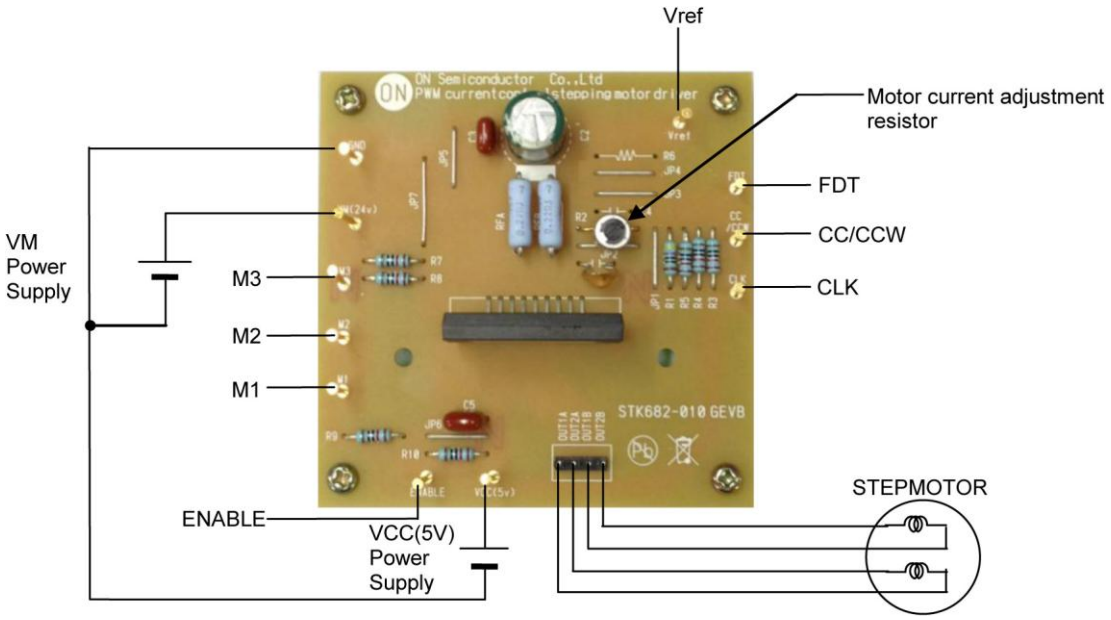

Evaluation Board Setup

[Supply Voltage] VM (10 to 30V): Power Supply for Step motor
VCC (5V) : Power Supply for internal logic IC

[Operation Guide]

1. Motor Connection:
   Connect the stepping motor to A, AB, B and BB.

2. Initial Condition Setting:
   Set “ON or OFF” M1 to M3 depend on step mode, and set ENABL”H”
   set FDT:Slow→to 3.5v,MIX→1.1V to 3.1V or OPEN,FAST→to 0.8V
   set “ON or OFF” CC/CCW, and set low CLK.

3. Power Supply:
   At first, supply DC voltage to VCC, and VREF.
   Next, supply DC voltage to VM.

4. Ready for Operation from Standby State:
   Turn “OFF” the slide switch ENABLE.

5. Motor Operation: Input the CLK signal into the terminal CLK.