Ordering number : EN6041A

STK672-110-E

ON Semiconductor®

http://onsemi.com

Thick-Film Hybrid IC

Unipolar Fixed-Current Chopper (Self-Excited PWM) Scheme and Built-in Phase Signal Distribution IC

Two-Phase Stepping Motor Driver (Square Wave Drive) Output Current 1.8A

Overview

The STK672-110-E is a unipolar fixed-current chopper type 2-phase stepping motor driver hybrid IC. It features power MOSFETs in the output stage and a built-in phase signal distribution IC. The incorporation of a phase distribution IC allows the STK672-110-E to control the speed of the motor based on the frequency of an external input clock signal. It supports two types of excitation for motor control: 2-phase excitation and 1-2 phase excitation. It also provides a function for switching the motor direction.

Applications

- Two-phase stepping motor drive in send/receive facsimile units
- Paper feed in copiers, industrial robots, and other applications that require 2-phase stepping motor drive

Features

- The motor speed can be controlled by the frequency of an external clock signal (the CLOCK pin signal).
- The excitation type is switched according to the state (low or high) of the MODE pin. The mode is set to 2-phase or 1-2 phase excitation on the rising edge of the clock signal.
- A motor direction switching pin (the CWB pin) is provided.
- All inputs are schmitt inputs and 40kΩ (typical: –50 to +100%) pull-up resistors are built in.
- The motor current can be set by changing the Vref pin voltage. Since a 0.22Ω current detection resistor is built in, a current of 1A is set for each 0.22V of applied voltage.
- The input frequency range for the clock signal used for motor speed control is 0 to 25kHz.
- Supply voltage ranges: V_{CC} = 10 to 42V, V_{DD} = 5.0V ±5%
- This IC supports motor operating currents of up to 1.8A at Tc = 105°C, and of up to 2.65A at Tc = 25°C.

Semiconductor Components Industries, LLC, 2013

Specifications

Maximum Ratings at Tc = 25°C

Parameter	Symbol	Conditions	Ratings	Unit
Maximum supply voltage 1	V_{CC} max	No signal	52	V
Maximum supply voltage 2	V_{DD} max	No signal	-0.3 to +7.0	V
Input voltage	V_{IN} max	Logic input pins	-0.3 to +7.0	V
Output current	I_{OH} max	V_{DD} = 5V, CLOCK ≥ 200Hz	2.65	A
Repeated avalanche capacity	Ear max		28	mJ
Allowable power dissipation	Pd max	With an arbitrarily large heat sink. Per MOSFET	6.5	W
Operating substrate temperature	Tc max		105	°C
Junction temperature	Tj max		150	°C
Storage temperature	Tstg		-40 to +125	°C

Stresses exceeding Maximum Ratings may damage the device. Maximum Ratings are stress ratings only. Functional operation above the Recommended Operating Conditions is not implied. Extended exposure to stresses above the Recommended Operating Conditions may affect device reliability.

Allowable Operating Ranges at Ta = 25°C

Parameter	Symbol	Conditions	Ratings	Unit
Maximum supply voltage 1	V_{CC}	With signals applied	10 to 42	V
Maximum supply voltage 2	V_{DD}	With signals applied	5.0 ± 5%	V
Input voltage	V_{IH}		0 to V_{DD}	V
Output current 1	$I_{OH}1$	Tc = 105°C, CLOCK ≥ 200Hz	1.8	A
Output current 2	$I_{OH}2$	Tc = 80°C, CLOCK ≥ 200Hz See the motor curren (I_{OH}) derating curve	2.1	A
Clock frequency	f_{CL}	Minimum pulse width: 20μs	0 to 25	kHz
Phase driver withstand voltage	V_{DSS}	I_D = 1mA (Tc = 25°C)	100 min	V

Electrical Characteristics at Tc = 25°C, V_{CC} = 24V, V_{DD} = 5V

Parameters	Symbols	Conditions	Rating			unit
			min	typ	max	
V_{DD} supply current	I_{CCO}	CLOCK = GND		2.6	6	mA
Output average current	Ioave	With R/L = 3Ω/3.8mH in each phase Vref = 0.176V	0.41	0.45	0.50	A
FET diode forward voltage	Vdf	If = 1A (R_L = 23Ω)		1.2	1.8	V
Output saturation voltage	Vsat	R_L = 23Ω		0.73	1.02	V
High-level input voltage	V_{IH}	Pins 6 to 9 (4 pins)	4.0			V
Low-level input voltage	V_{IL}	Pins 6 to 9 (4 pins)			1.0	V
Input current	I_{IL}	With pins 6 to 9 at the ground level. Pull-up resistance: 40kΩ (typical)	62	125	250	μA
Vref input voltage	V_{rH}	Pin 12	0		3.5	V
Vref input bias current	I_{IB}	With pin 12 at 1V		50	500	nA

Note: A fixed-voltage power supply must be used.

Package Dimensions

unit:mm (typ)

4168

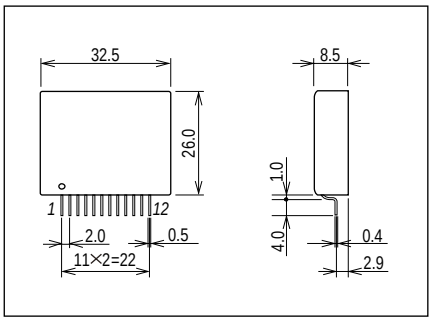

Internal Equivalent Circuit Block Diagram

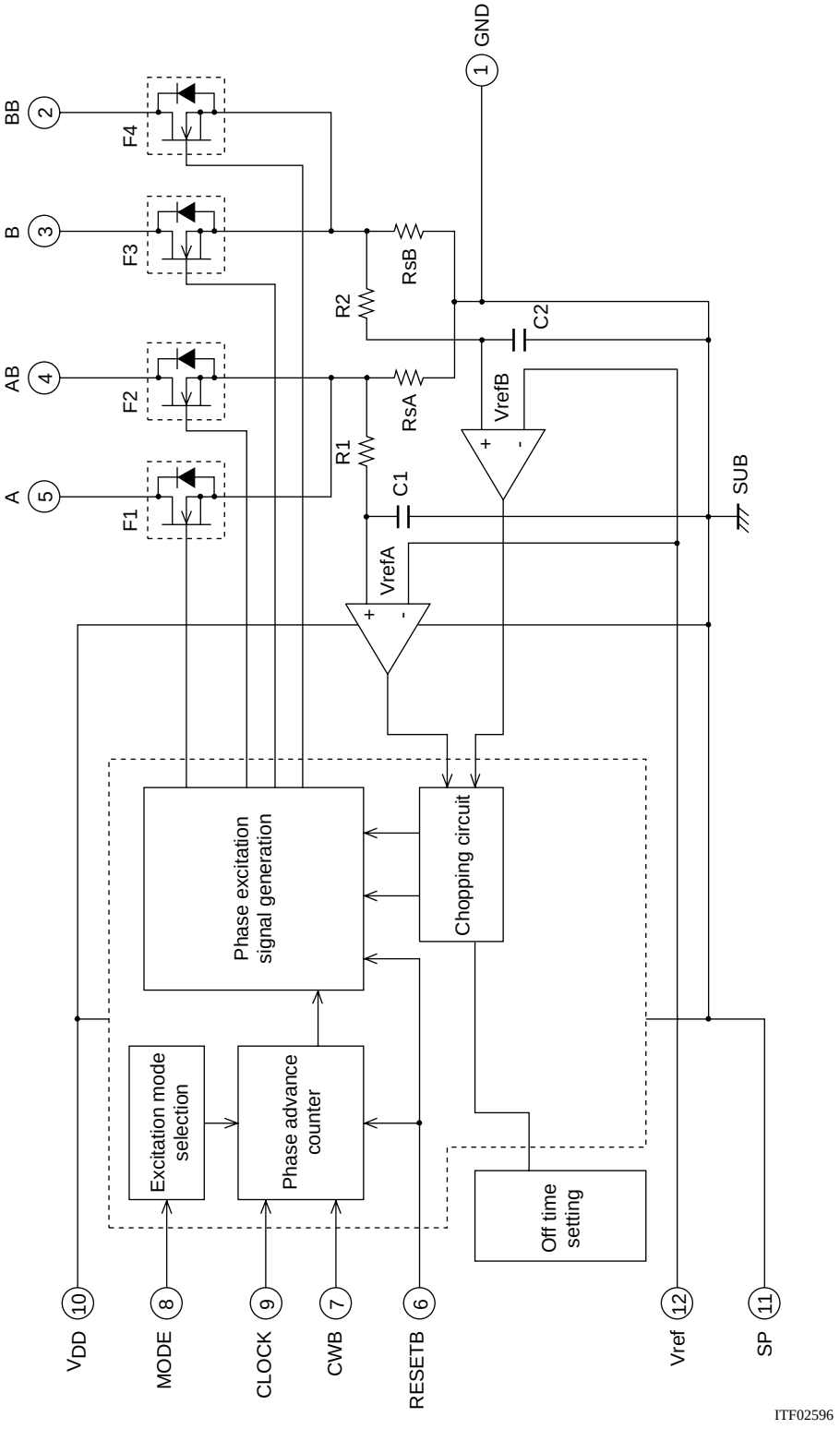

Sample Application Circuit

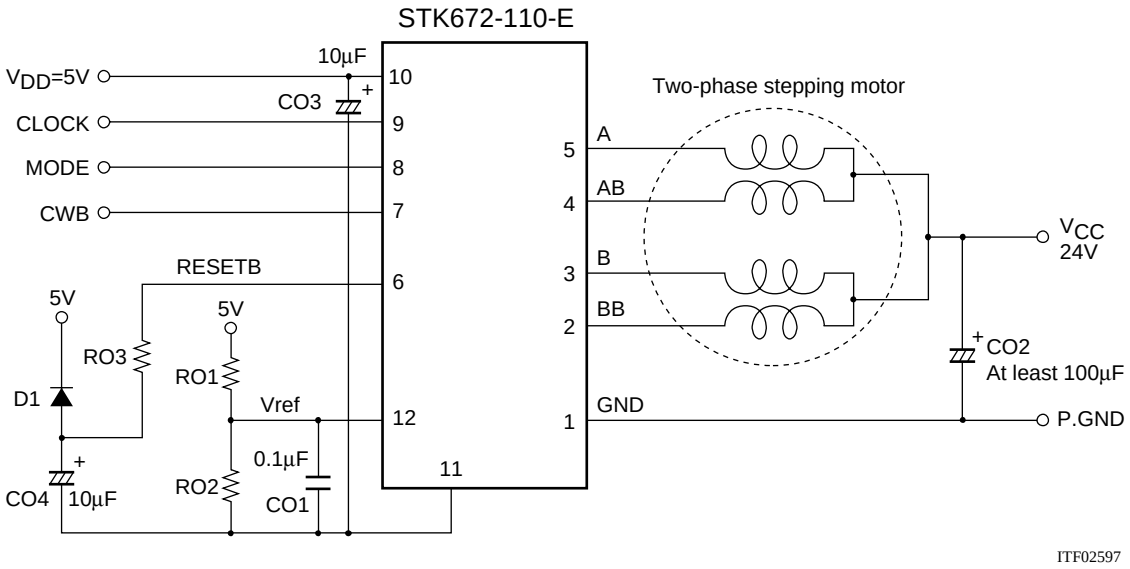

- To minimize noise in the 5V system, locate the ground side of capacitor CO2 in the above circuit as close as possible to pin 1 of the IC.
- Insert resistor RO3 (47 to 100Ω) so that the discharge energy from capacitor CO4 is not directly applied to the CMOS IC in this hybrid device. If the diode D1 has Vf characteristics with Vf less than or equal to 0.6V (when If = 0.1A), this will be smaller than the CMOS IC input pin diode Vf. If this is the case RO3 may be replaced with a short without problem.
- Standard or HC type input levels are used for the pin 7, 8, and 9 inputs.
- If open-collector type circuits are used for the pin 7, 8, and 9 inputs, these circuit will be in the high-impedance state for high level inputs. As a result, chopping circuit noise may cause the input circuits to operate incorrectly. To prevent incorrect operation due to such noise, capacitors with values between 470 and 1000pF must be connected between pins 7 and 11, 8 and 11, and 9 and 11. (A capacitor with a value between 470 and 1000pF must be connected between pins 6 and 11 as well if an open-collector output IC is used for the RESETB pin (pin 6) input.)
- Taking the input bias current (I_{IB}) characteristics into account, the resistor RO1 must not exceed 100kΩ.
- The following circuit (for a lowered current of over 0.2A) is recommended if the application needs to temporarily lower the motor current. Here, a value of close to 100kΩ must be used for resistor RO1 to make the transistor output saturation voltage as low as possible.

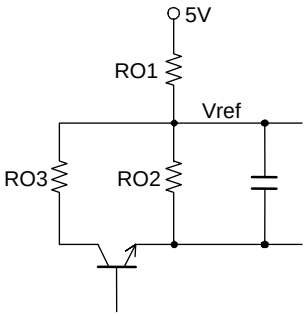

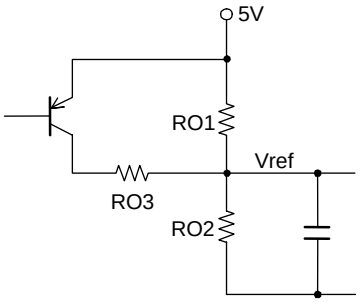

Input Pin Functions (CMOS input levels)

Pin	Pin No.	Function	Input conditions when operating
CLOCK	9	Reference clock for motor phase current switching	Operates on the rising edge of the signal
MODE	8	Excitation mode selection	Low: 2-phase excitation High: 1-2 phase excitation
CWB	7	Motor direction switching	Low: CW (forward) High: CCW (reverse)
RESETB	6	System reset and A, AB, B, and BB outputs cutoff. Applications must apply a reset signal for at least 20μs when power is first applied.	A reset is applied by a low level

- A simple reset function is formed from D1, CO4, and RO3 in this application circuit. With the CLOCK input held low, when the 5V supply voltage is brought up a reset is applied if the motor output phases A and BB are driven.
  If the 5V supply voltage rise time is slow (over 50ms), the motor output phases A and BB may not be driven. Increase the value of the capacitor CO4 and check circuit operation again.
- See the timing chart for the concrete details on circuit operation.

Usage Notes

- 5V system input pins
  [RESETB and CLOCK (Input signal timing when power is first applied)]
  As shown in the timing chart, a RESETB signal input is required by the driver to operate with the timing in which the F1 gate is turned on first. The RESETB signal timing must be set up to have a width of at least 20μs, as shown below. The capacitor CO4 and the resistor RO3 in the application circuit form simple reset circuit that uses the RC time constant rising time. However, when designing the RESETB input based on CMOS levels, the application must have the timing shown in figure 1.

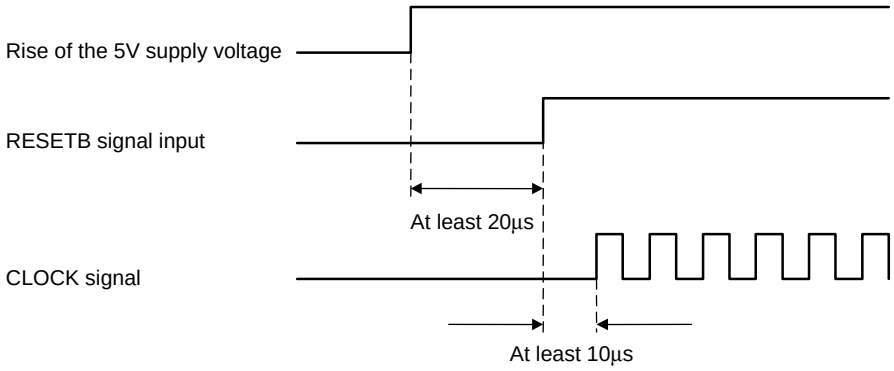

Figure 1 RESETB and CLOCK Signals Input Timing

See the timing chart for details on the CLOCK, MODE, CWB, and other input pins.

[Vref <Motor current peak value setting>]
In the sample application circuit, the peak value of the motor current (I_{OH}) is set by RO1, RO2, and V_{DD} (5V) as described by the formula below.

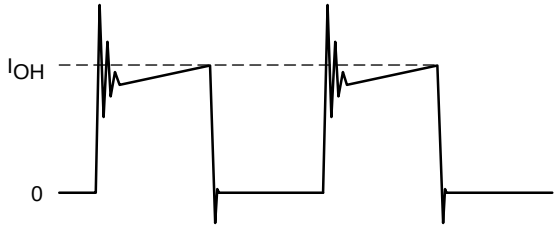

Figure 2 Motor Current I_O Flowing into the Driver IC

I_{OH} = Vref ÷ Rs Here, Rs is hybrid IC internal current detection resistor
Vref = (R02 ÷ (R01 + R02)) × 5V
STK672-110-E: Rs = 0.22Ω

- Allowable motor current operating range

The motor current (I_{OH}) must be held within the range corresponding to the area under the curve shown in figure 4. For example, if the operating substrate temperature Tc is 105°C, then I_{OH} must be held under I_{OH} = 1.8A, and in hold mode I_{OH} must be held under I_{OH} = 1.5A.

- Thermal design

[Operating range in which a heat sink is not used]

The STK672-110-E package has a structure that uses no screws, and is recommended for use without a heat sink. This section discusses the safe operating range when no heat sink is used.

In the maximum ratings specifications, Tc max is specified to be 105°C, and when mounted in an actual end product system, the Tc max value must never be exceeded during operation. Tc can be expressed by formula (A) below, and thus the range for ΔTc must be stipulated so that Tc is always under 105°C.

$Tc = Ta + \Delta Tc$ (A)

Ta: Hybrid IC ambient temperature, ΔTc: Temperature increase across the aluminum substrate

As shown in figure 6, the value of ΔTc increases as the hybrid IC internal average power dissipation P_D increases. As shown in figure 5, P_D increases with the motor current. Here we describe the actual P_D calculation using the example shown in the motor current timing chart in figure 3.

Since there are periods when current flows and periods when the current is off during actual motor operation, P_D cannot be determined from the data presented in figure 5. Therefore, we calculate P_D assuming that actual motor operation consists of repetitions of the operation shown in figure 3.

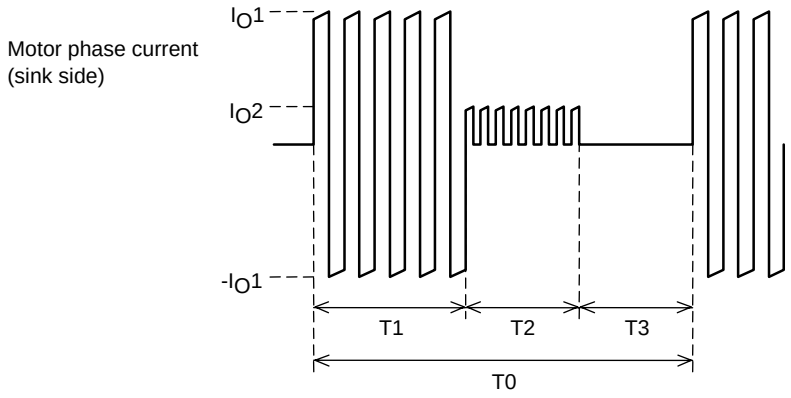

Figure 3 Motor Current Timing

T1: Motor rotation operation time
T2: Motor hold operation time
T3: Motor current off time
T2 may be reduced, depending on the application.
T0: Single repeated motor operating cycle
I_O1 and I_O2: Motor current peak values
Due to the structure of motor windings, the phase current is a positive and negative current with a pulse form.
Note that figure 3 presents the concepts here, and that the on/off duty of the actual signals will differ.

The hybrid IC internal average power dissipation P_D can be calculated from the following formula.

$P_D = (T1 \times P1 + T2 \times P2 + T3 \times 0) \div T0$ (I)

(Here, P1 is the P_D for I_O1 and P2 is the P_D for I_O2)

If the value calculated in formula (I) above is under 1.4W, then from figure 6 we see that operation is allowed up to an ambient temperature Ta of 60°C.

While the operating range when a heat sink is not used can be determined from formula (I) above, figure 5 is merely a single example of one operating mode for a single motor.

For example, while figure 5 shows a 2-phase excitation motor, if 1-2 phase excitation is used with a 500Hz clock frequency, the drive will be turned off for 25% of the time and the dissipation P_D will be reduced to 75% of that in figure 5.

It is extremely difficult for Our company to calculate the internal average power dissipation P_D for all possible end product conditions. After performing the above rough calculations, always install the hybrid IC in an actual end product and verify that the substrate temperature Tc does not rise above 105°C.

Timing Chart

2-phase excitation

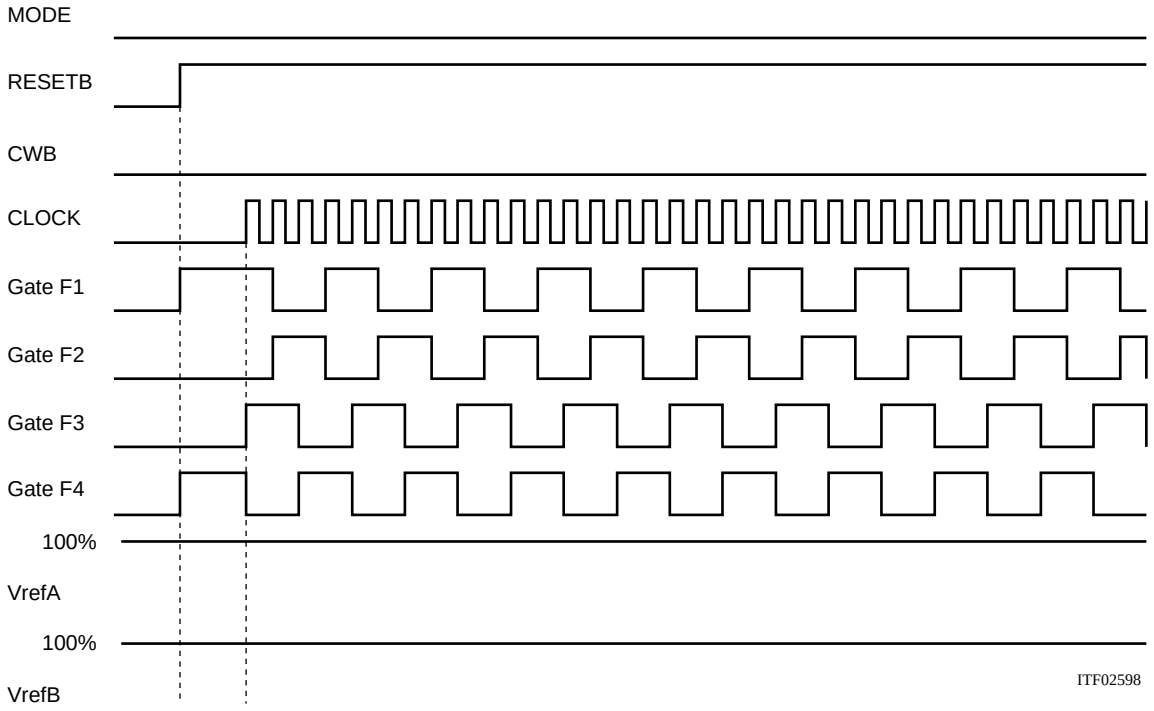

1-2 phase excitation

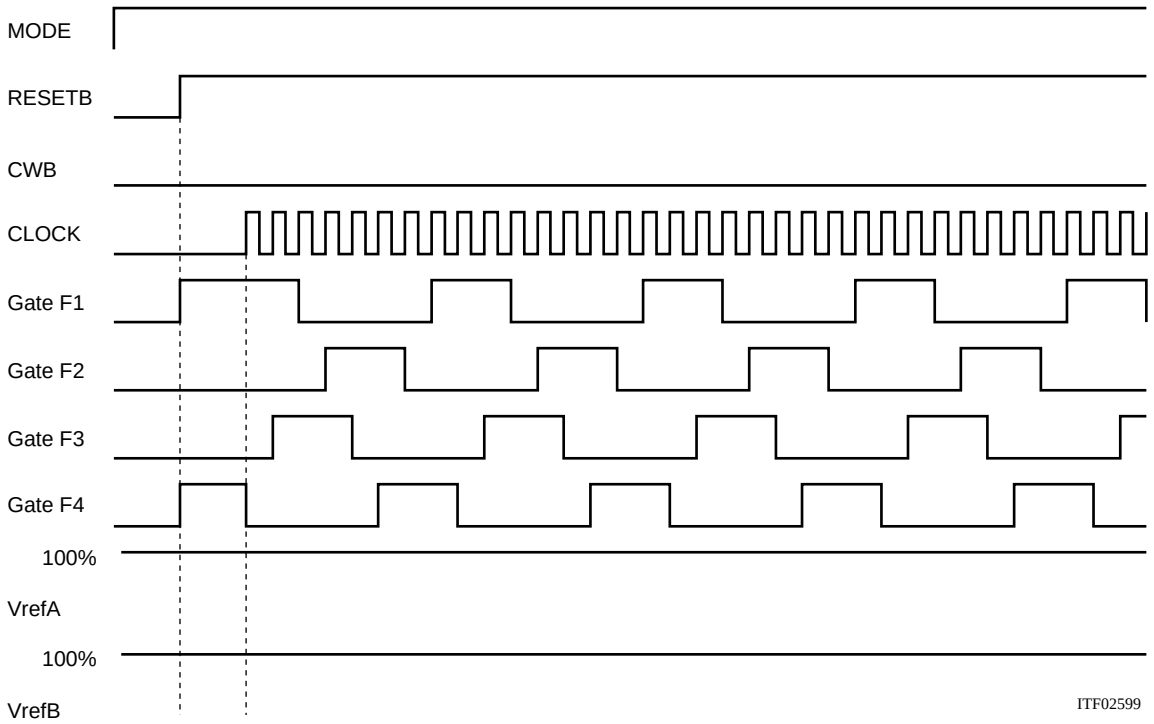

1-2 phase excitation (CWB)

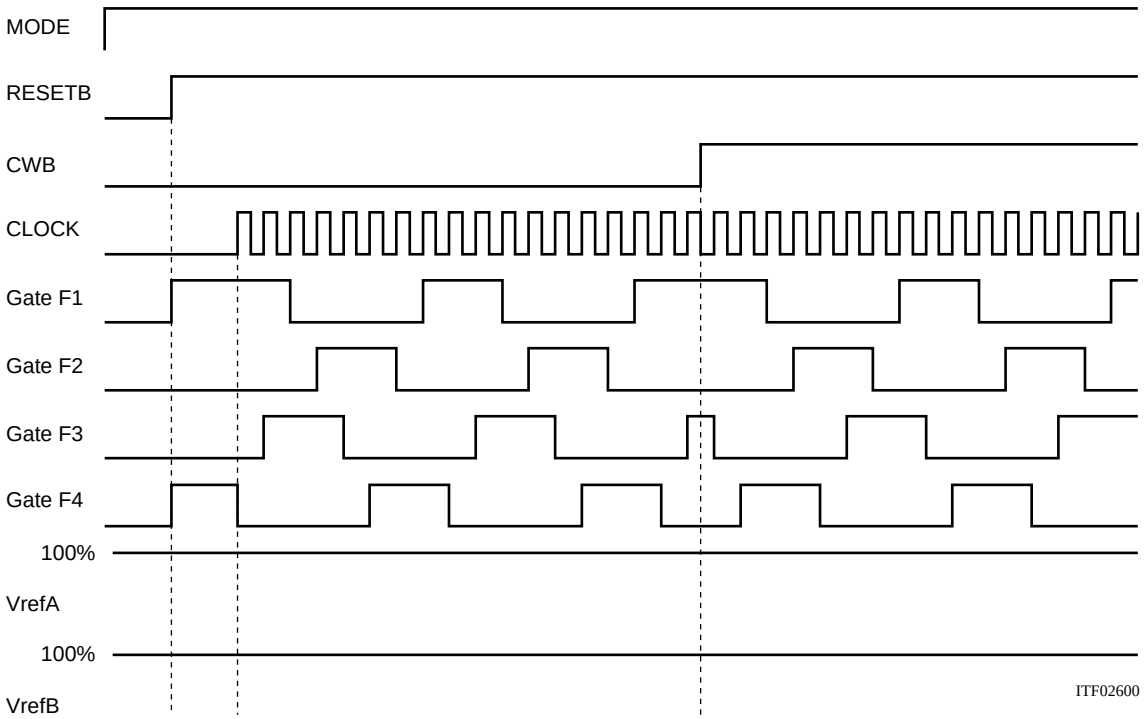

Switching from 2-phase to 1-2 phase excitation

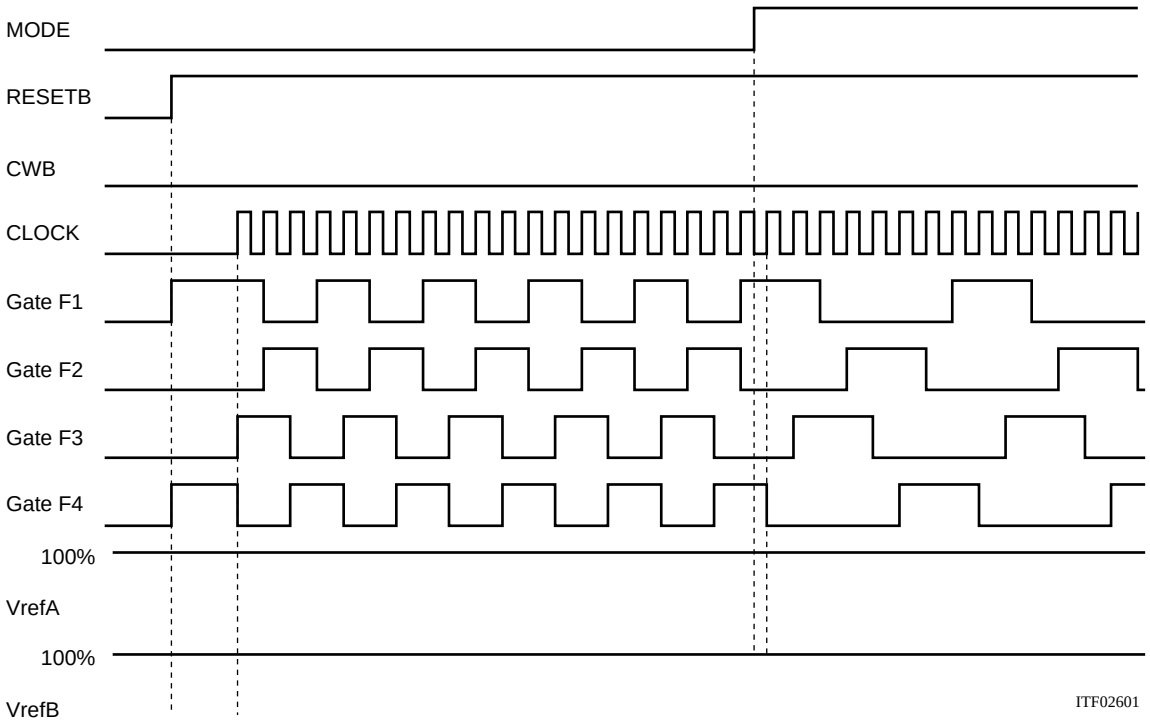

Figure 4 I_{OH} - Tc

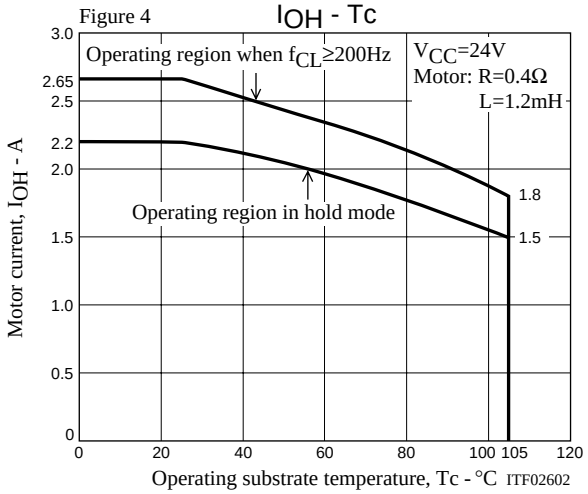

Figure 5 P_D - I_{OH}

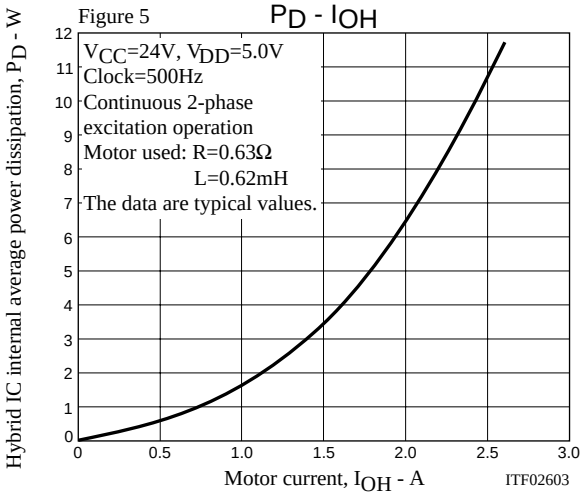

Figure 6 ΔTc - P_D

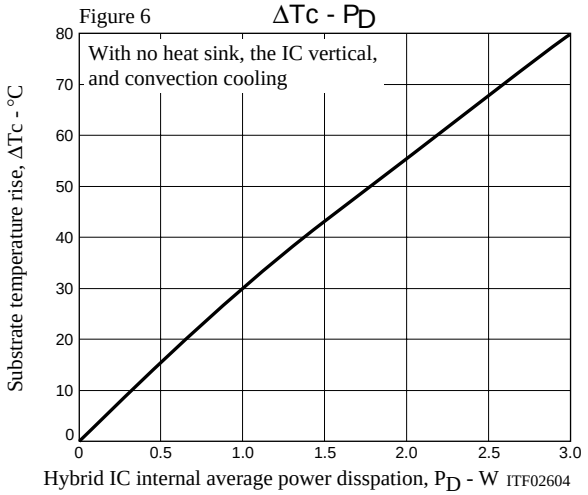

ON Semiconductor and the ON logo are registered trademarks of Semiconductor Components Industries, LLC (SCILLC). SCILLC owns the rights to a number of patents, trademarks, copyrights, trade secrets, and other intellectual property. A listing of SCILLC's product/patent coverage may be accessed at www.onsemi.com/site/pdf/Patent-Marking.pdf. SCILLC reserves the right to make changes without further notice to any products herein. SCILLC makes no warranty, representation or guarantee regarding the suitability of its products for any particular purpose, nor does SCILLC assume any liability arising out of the application or use of any product or circuit, and specifically disclaims any and all liability, including without limitation special, consequential or incidental damages. "Typical" parameters which may be provided in SCILLC data sheets and/or specifications can and do vary in different applications and actual performance may vary over time. All operating parameters, including "Typicals" must be validated for each customer application by customer's technical experts. SCILLC does not convey any license under its patent rights nor the rights of others. SCILLC products are not designed, intended, or authorized for use as components in systems intended for surgical implant into the body, or other applications intended to support or sustain life, or for any other application in which the failure of the SCILLC product could create a situation where personal injury or death may occur. Should Buyer purchase or use SCILLC products for any such unintended or unauthorized application, Buyer shall indemnify and hold SCILLC and its officers, employees, subsidiaries, affiliates, and distributors harmless against all claims, costs, damages, and expenses, and reasonable attorney fees arising out of, directly or indirectly, any claim of personal injury or death associated with such unintended or unauthorized use, even if such claim alleges that SCILLC was negligent regarding the design or manufacture of the part. SCILLC is an Equal Opportunity/Affirmative Action Employer. This literature is subject to all applicable copyright laws and is not for resale in any manner.