ON Semiconductor

Is Now



To learn more about onsemi™, please visit our website at
www.onsemi.com

onsemi and onsemi and other names, marks, and brands are registered and/or common law trademarks of Semiconductor Components Industries, LLC dba "**onsemi**" or its affiliates and/or subsidiaries in the United States and/or other countries. **onsemi** owns the rights to a number of patents, trademarks, copyrights, trade secrets, and other intellectual property. A listing of **onsemi** product/patent coverage may be accessed at www.onsemi.com/site/pdf/Patent-Marking.pdf. **onsemi** reserves the right to make changes at any time to any products or information herein, without notice. The information herein is provided "as-is" and **onsemi** makes no warranty, representation or guarantee regarding the accuracy of the information, product features, availability, functionality, or suitability of its products for any particular purpose, nor does **onsemi** assume any liability arising out of the application or use of any product or circuit, and specifically disclaims any and all liability, including without limitation special, consequential or incidental damages. Buyer is responsible for its products and applications using **onsemi** products, including compliance with all laws, regulations and safety requirements or standards, regardless of any support or applications information provided by **onsemi**. "Typical" parameters which may be provided in **onsemi** data sheets and/or specifications can and do vary in different applications and actual performance may vary over time. All operating parameters, including "Typicals" must be validated for each customer application by customer's technical experts. **onsemi** does not convey any license under any of its intellectual property rights nor the rights of others. **onsemi** products are not designed, intended, or authorized for use as a critical component in life support systems or any FDA Class 3 medical devices or medical devices with a same or similar classification in a foreign jurisdiction or any devices intended for implantation in the human body. Should Buyer purchase or use **onsemi** products for any such unintended or unauthorized application, Buyer shall indemnify and hold **onsemi** and its officers, employees, subsidiaries, affiliates, and distributors harmless against all claims, costs, damages, and expenses, and reasonable attorney fees arising out of, directly or indirectly, any claim of personal injury or death associated with such unintended or unauthorized use, even if such claim alleges that **onsemi** was negligent regarding the design or manufacture of the part. **onsemi** is an Equal Opportunity/Affirmative Action Employer. This literature is subject to all applicable copyright laws and is not for resale in any manner. Other names and brands may be claimed as the property of others.

STK554U362A-E

Intelligent Power Module (IPM) 600 V, 10 A

ON Semiconductor®

www.onsemi.com

Overview

This “Inverter IPM” is highly integrated device containing all High Voltage (HV) control from HV-DC to 3-phase outputs in a single small SIP module. Output stage uses IGBT/FRD technology and implements Under Voltage Protection (UVP) and Over Current Protection (OCP) with a Fault Detection output flag. Internal Boost diodes are provided for high side gate boost drive.

Function

- Single control power supply due to Internal bootstrap circuit for high side pre-driver circuit
- All control inputs and status outputs are at low voltage levels directly compatible with microcontrollers.
- A single power supply drive is enabled through the use of bootstrap circuits for upper power supplies
- Built-in dead-time for shoot-thru protection
- Having open emitter output for low side IGBTs ; individual shunt resistor per phase for OCP
- Externally accessible embedded thermistor for substrate temperature measurement
- Shutdown function ‘ITRIP’ to disable all operations of the 6 phase output stage by external input

Certification

- UL1557 (File number : E339285)

Typical Applications

- Industrial Pumps
- Industrial Fans
- Industrial Automation
- Home Appliances

PACKAGE PICTURE

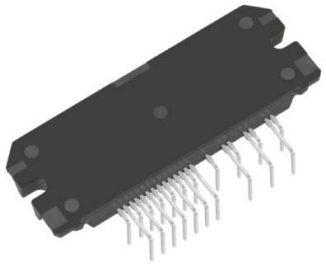

SIP29 56x21.8

MARKING DIAGRAM

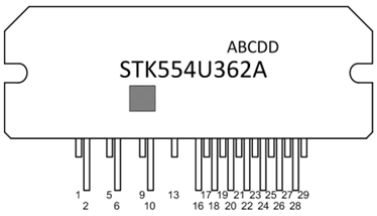

STK554U362A = Specific Device Code
A = Year
B = Month
C = Production Site
DD = Factory Lot Code
Device marking is on package underside
2D Code Format: DMX code (22X22)

Content of the code	Digit
Model Lot code	1 – 5
Module parts number	7-19

ORDERING INFORMATION

See detailed ordering and shipping information on page 15 of this data sheet.

© Semiconductor Components Industries, LLC, 2016

Specifications

Absolute Maximum Ratings at Tc = 25°C

Parameter	Symbol	Remarks	Ratings	Unit
Supply voltage	V_{CC}	V+ to U-, V-, W-, surge < 500 V *1	450	V
Collector-emitter voltage	V_{CE}	V+ to U, V, W or U, V, W, to U-, V-, W-	600	V
Output current	Io	V+,U-,V-,W-,U,V,W terminal current	±10	A
		V+,U-,V-,W-,U,V,W terminal current, Tc = 100°C	±7	A
Output peak current	Iop	V+,U-,V-,W-,U,V,W terminal current, P.W. = 1 ms	±20	A
Pre-driver voltage	VD1, 2, 3, 4	VB1 to U, VB2 to V, VB3 to W, V_{DD} to V_{SS} *2	20	V
Input signal voltage	VIN	HIN1, 2, 3, LIN1, 2, 3	−0.3 to V_{DD}	V
FLTEN terminal voltage	VFLTEN	FLTEN terminal	−0.3 to V_{DD}	V
Maximum power dissipation	Pd	IGBT per 1 channel	30	W
Junction temperature	Tj	IGBT, FRD, Pre-Driver IC	150	°C
Storage temperature	Tstg		−40 to +125	°C
Operating case temperature	Tc	IPM case	−40 to +100	°C
Tightening torque		A screw part *3	0.9	Nm
Withstand voltage	Vis	50 Hz sine wave AC 1 minute *4	2000	VRMS

Reference voltage is "V_{SS}" terminal voltage unless otherwise specified.

*1 : Surge voltage developed by the switching operation due to the wiring inductance between V+ and U-(V-, W-) terminal.
*2 : VD1 = VB1 to U, VD2 = VB2 to V, VD3 = VB3 to W, VD4 = V_{DD} to V_{SS} terminal voltage.
*3 : Flatness of the heat-sink should be less than −50 μm to +100 μm.
*4 : Test conditions : AC 2500 V, 1 second.

Stresses exceeding those listed in the Maximum Ratings table may damage the device. If any of these limits are exceeded, device functionality should not be assumed, damage may occur and reliability may be affected.

Electrical Characteristics at Tc = 25°C, VD1, VD2, VD3, VD4 = 15 V

Parameter	Symbol	Conditions	Test circuit	Min	Typ	Max	Unit
Power output section							
Collector-emitter cut-off current	I_{CE}	V_{CE} = 600 V	Fig.1	–	–	100	μA
Bootstrap diode reverse current	IR(DB)	VR(DB) = 600 V		–	–	100	μA
Collector to emitter saturation voltage	V_{CE}(sat)	Ic = 10 A, Tj = 25°C	Fig.2	–	1.6	2.2	V
		Ic = 5 A, Tj = 100°C		–	1.35	–	
Diode forward voltage	VF	IF = 10 A, Tj = 25°C	Fig.3	–	1.6	2.1	V
		IF = 5 A, Tj = 100°C		–	1.3	–	
Junction to case thermal resistance	θj-c(T)	IGBT	–	–	–	4	°C/W
	θj-c(D)	FWD		–	–	5	
Control (Pre-driver) section							
Pre-driver power dissipation	ID	VD1, 2, 3 = 15 V	Fig.4	–	0.08	0.4	mA
		VD4 = 15 V		–	1.6	4	
High level Input voltage	Vin H	HIN1, HIN2, HIN3, LIN1, LIN2, LIN3 to V_{SS}	–	2.5	–	–	V
Low level Input voltage	Vin L		–	–	–	0.8	V
Logic 1 input leakage current	I_{IN+}	VIN = +3.3 V	–	–	100	143	μA
Logic 0 input leakage current	I_{IN-}	VIN = 0 V	–	–	–	2	μA
FLTEN terminal sink current	IoSD	FAULT : ON / VFLTEN = 0.1 V	–	–	2	–	mA
FLTEN clearance delay time	FLTCLR	From time fault condition clear	–	1.3	1.65	2	ms
FLTEN Threshold	VEN+	VEN rising	–	–	–	2.5	V
	VEN-	VEN falling	–	0.8	–	–	V
ITRIP threshold voltage	VITRIP	ITRIP(16) to V_{SS}(29)	–	0.44	0.49	0.54	V
ITRIP to shutdown propagation delay	t_{ITRIP}		–	340	550	800	ns
ITRIP blanking time	$t_{ITRIPBL}$		–	250	350	–	ns
V_{CC} and V_{BS} supply undervoltage protection reset	V_{CCUV+} V_{BSUV+}		–	10.5	11.1	11.7	V
V_{CC} and V_{BS} supply undervoltage protection set	V_{CCUV-} V_{BSUV-}		–	10.3	10.9	11.5	V
V_{CC} and V_{BS} supply undervoltage hysteresis	V_{CCUVH} V_{BSUVH}		–	0.14	0.2	–	V
Thermistor for substrate temperature Monitor	Rt	Resistance between TH(27) and V_{SS}(29)	–	42.3	47	51.7	kΩ

Reference voltage is "V_{SS}" terminal voltage unless otherwise specified.

Parameter	Symbol	Conditions	Test circuit	Min	Typ	Max	Unit
Switching Character							
Switching time	t ON	Io = 10 A Inductive load	Fig.5	–	0.4	–	μs
	t OFF			–	0.65	–	
Turn-on switching loss	Eon	Io = 5 A,V^+ = 300 V, V_{DD} = 15 V, L = 650 μH Tc = 25°C	–	–	130	–	μJ
Turn-off switching loss	Eoff		–	–	122	–	μJ
Total switching loss	Etot		–	–	252	–	μJ
Turn-on switching loss	Eon	Io = 5 A, V^+ = 300 V, V_{DD} = 15 V, L = 650 μH Tc = 100°C	–	–	156	–	μJ
Turn-off switching loss	Eoff		–	–	154	–	μJ
Total switching loss	Etot		–	–	310	–	μJ
Diode reverse recovery energy	Erec	I_0 = 5 A, V^+ = 400 V, V_{DD} = 15 V, L = 650 μH, Tc = 100°C	–	–	6.9	–	μJ
Diode reverse recovery time	trr		–	–	57	–	ns
Reverse bias safe operating area	RBSOA	Io = 20 A, V_{CE} = 450 V	–	Full square			–
Short circuit safe operating area	SCSOA	V_{CE} = 400 V, Tc = 100°C	–	4	–	–	μs
Allowable offset voltage slew rate	dv/dt	Between U(V,W) to U-(V-,W-)	–	–50	–	50	V/ns

Reference voltage is "V_{SS}" terminal voltage unless otherwise specified.

Product parametric performance is indicated in the Electrical Characteristics for the listed test conditions, unless otherwise noted. Product performance may not be indicated by the Electrical Characteristics if operated under different conditions.

Notes

1. The pre-drive power supply low voltage protection has approximately 200 mV of hysteresis and operates as follows.
   Upper side : The gate is turned off and will return to regular operation when recovering to the normal voltage, but the latch will continue till the input signal will turn 'low'.
   Lower side : The gate is turned off and will automatically reset when recovering to normal voltage. It does not depend on input signal voltage.

2. When assembling the IPM on the heat sink the tightening torque range is 0.6 Nm to 0.9 Nm.

3. The pre-drive low voltage protection protects the device when the pre-drive supply voltage falls due to an operating malfunction.

4. When use the over-current protection with external shunt resistor, please set the current protection level to be equal to or less than the rating of output peak current (Iop).

Module Pin-Out Description

Pin	Name	Description
1	VB3	High Side Floating Supply Voltage 3
2	W, VS3	Output 3 - High Side Floating Supply Offset Voltage
3	-	Without pin
4	-	Without pin
5	VB2	High Side Floating Supply voltage 2
6	V,VS2	Output 2 - High Side Floating Supply Offset Voltage
7	-	Without pin
8	-	Without pin
9	VB1	High Side Floating Supply voltage 1
10	U,VS1	Output 1 - High Side Floating Supply Offset Voltage
11	-	Without pin
12	-	Without pin
13	V+	Positive Bus Input Voltage
14	-	Without pin
15	-	Without pin
16	ITRIP	Current protection pin
17	U-	Low Side Emitter Connection - Phase U
18	FLTEN	Enable input / Fault output
19	V-	Low Side Emitter Connection - Phase V
20	HIN1	Logic Input High Side Gate Driver - Phase U
21	W-	Low Side Emitter Connection - Phase W
22	HIN2	Logic Input High Side Gate Driver - Phase V
23	HIN3	Logic Input High Side Gate Driver - Phase W
24	LIN1	Logic Input Low Side Gate Driver - Phase U
25	LIN2	Logic Input Low Side Gate Driver - Phase V
26	LIN3	Logic Input Low Side Gate Driver - Phase W
27	TH	Thermistor output
28	VDD	+15 V Main Supply
29	VSS	Negative Main Supply

Equivalent Block Diagram

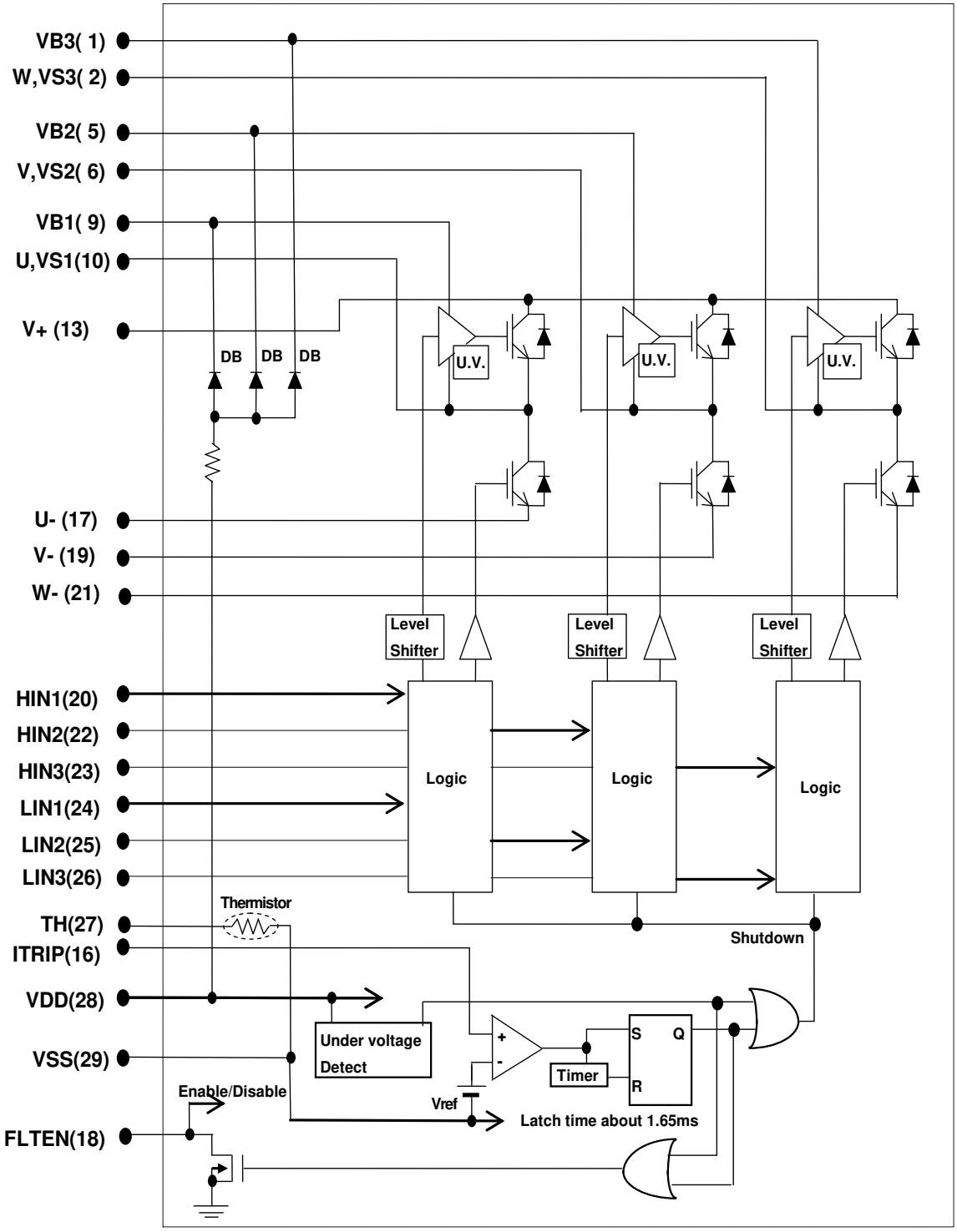

Test Circuit

The tested phase : U+ shows the upper side of the U phase and U- shows the lower side of the U phase.

■ I_{CE} / IR(BD)

	U+	V+	W+	U-	V-	W-
M	13	13	13	10	6	2
N	10	6	2	17	19	21

	U(DB)	V(DB)	W(DB)
M	9	5	1
N	29	29	29

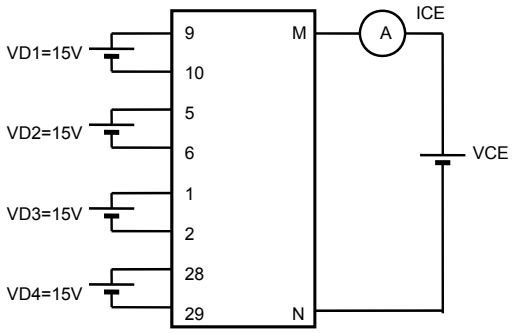

Fig.1

■ V_{CE}(sat) (Test by pulse)

	U+	V+	W+	U-	V-	W-
M	13	13	13	10	6	2
N	10	6	2	17	19	21
m	20	22	23	24	25	26

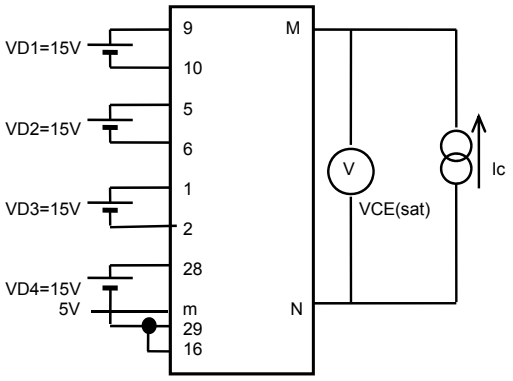

Fig.2

■ V_F (Test by pulse)

	U+	V+	W+	U-	V-	W-
M	13	13	13	10	6	2
N	10	6	2	17	19	21

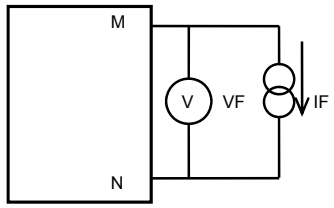

Fig.3

■ ID

	VD1	VD2	VD3	VD4
M	9	5	1	28
N	10	6	2	29

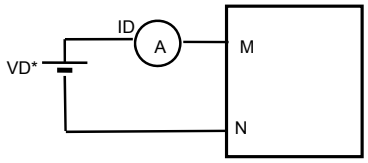

Fig.4

■ Switching time (The circuit is a representative example of the lower side U phase.)

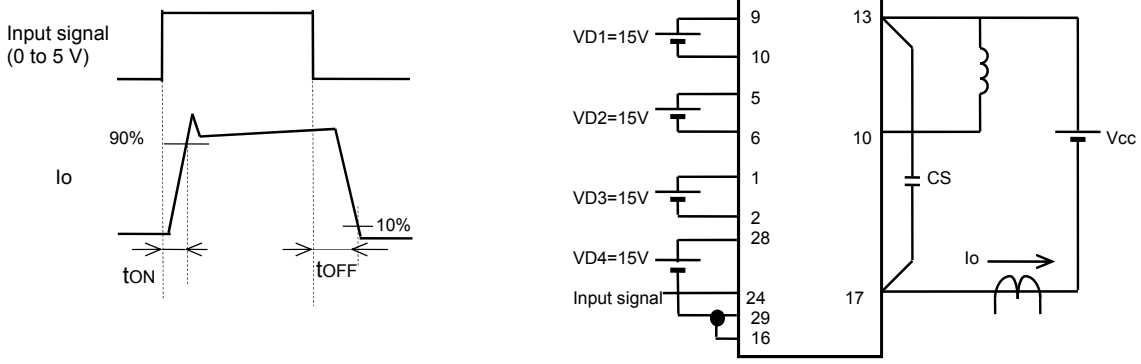

Fig.5

Input / Output Timing Chart

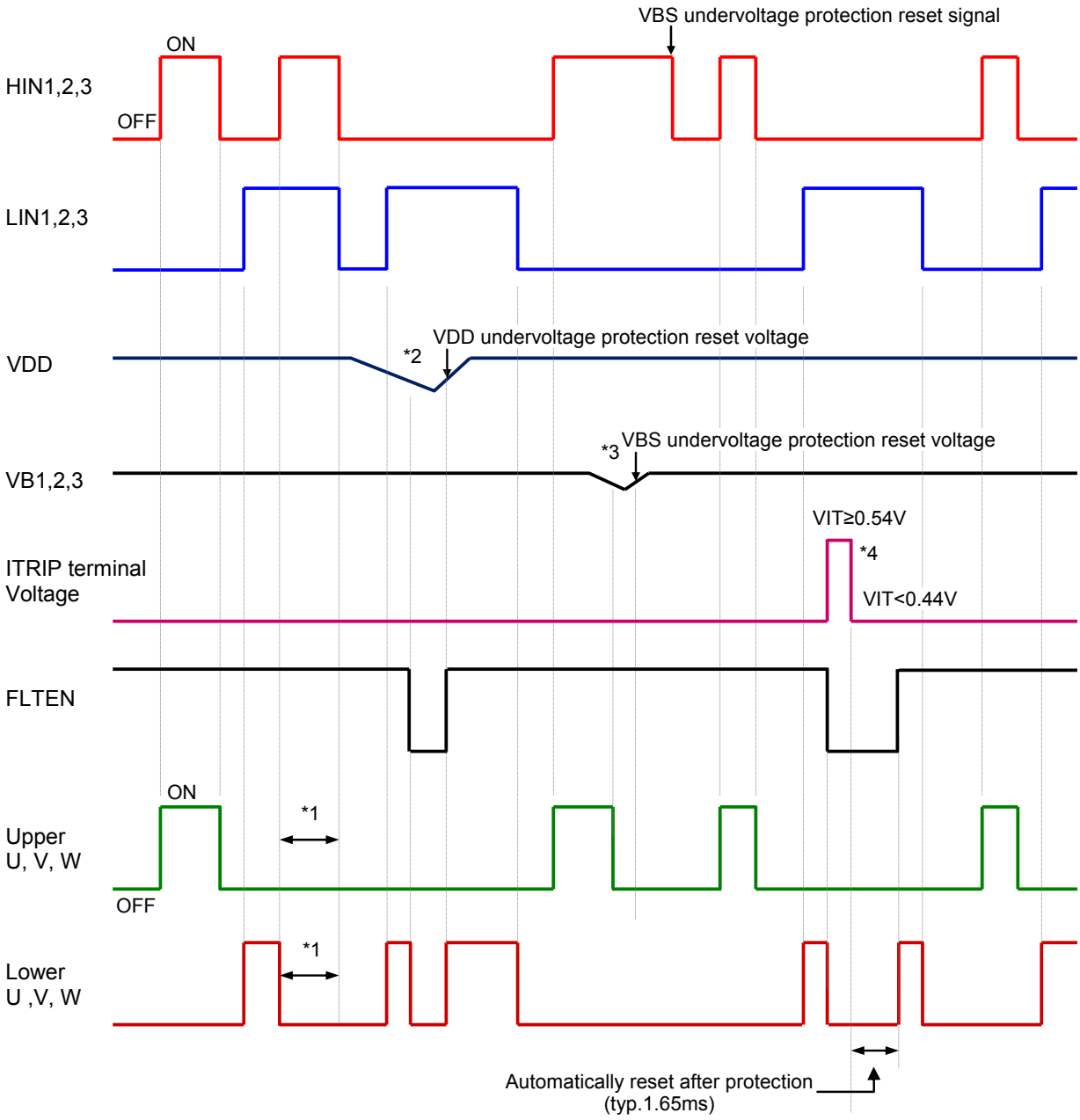

Fig. 6

Notes

*1 : Shows the prevention of shoot-thru via control logic, however, more dead time must be added to account for switching delay externally.

*2 : When V_{DD} decreases all gate output signals will go low and cut off all 6 IGBT outputs. When V_{DD} rises the operation will resume immediately.

*3 : When the upper side voltage at VB1, VB2 and VB3 drops only the corresponding upper side output is turned off. The outputs return to normal operation immediately after the upper side gate voltage rises.

*4 : When VITRIP exceeds threshold all IGBT's are turned off and normal operation resumes 2 ms (typ) after over current condition is removed.

Logic level table

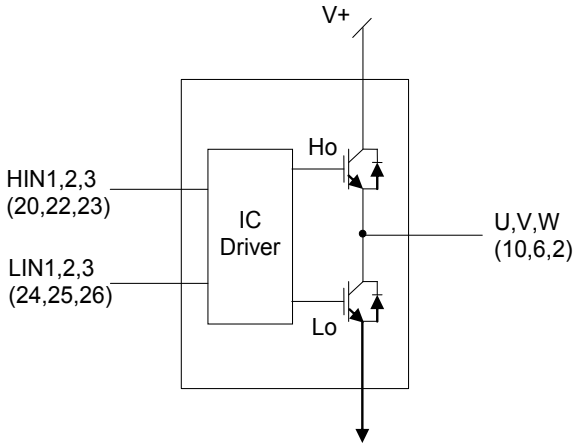

FLTEN	Itrip	HIN1,2,3	LIN1,2,3	U,V,W
1	0	1	0	Vbus
1	0	0	1	0
1	0	0	0	Off
1	0	1	1	Off
1	1	X	X	Off
0	X	X	X	Off

Fig. 7

Sample Application Circuit

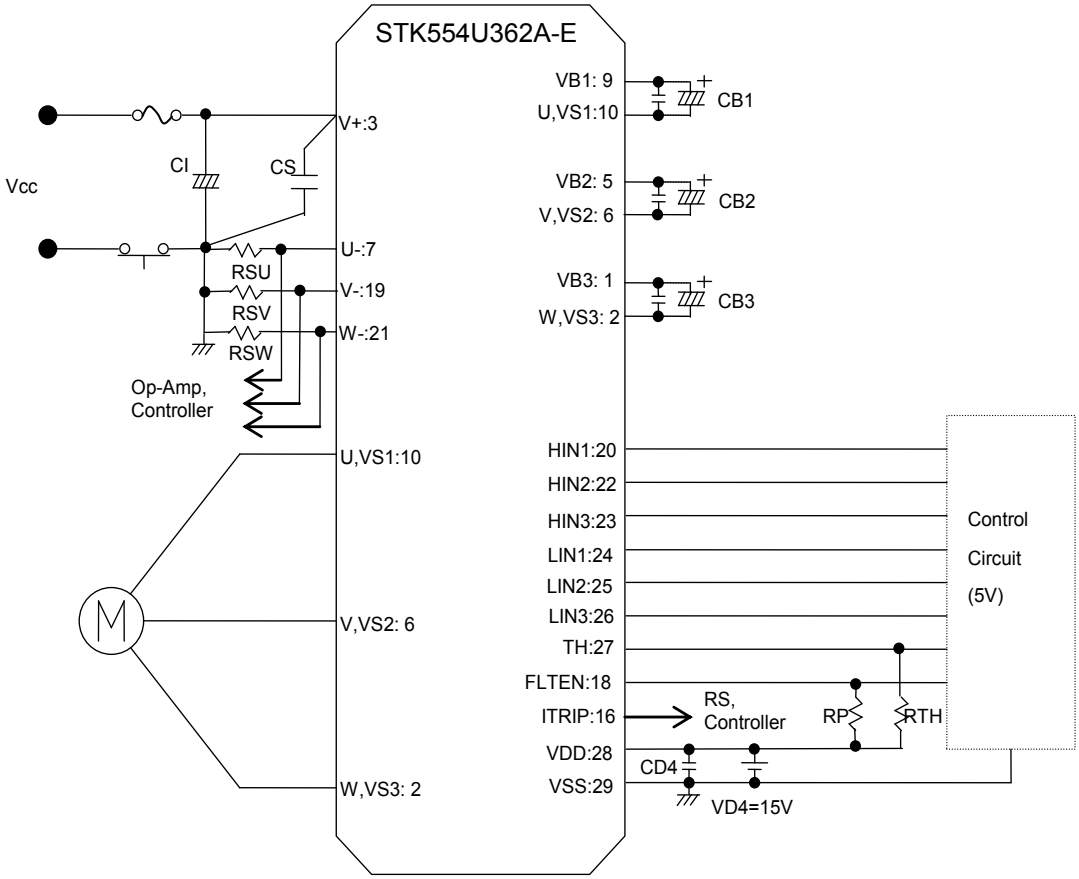

Fig.8

Recommended Operating Condition

Item	Symbol	Conditions	Min.	Typ.	Max.	Unit
Supply voltage	V_{CC}	V+ to U-(V-,W-)	0	280	450	V
Pre-driver supply voltage	VD1, 2, 3	VB1 to U, VB2 to V, VB3 to W	12.5	15	17.5	V
	VD4	V_{DD} to V_{SS} *1	13.5	15	16.5	
ON-state input voltage	VIN(ON)	HIN1, HIN2, HIN3, LIN1, LIN2, LIN3	3.0	–	5.0	V
OFF-state input voltage	VIN(OFF)		0	–	0.3	
PWM frequency	fPWM		1	–	20	kHz
Dead time	DT	Turn-off to turn-on (external)	0.5	–	–	μs
Allowable input pulse width	PWIN	ON and OFF	1	–	–	μs
Tightening torque		'M3' type screw	0.6	–	0.9	Nm

*1 : Pre-drive power supply (VD4 = 15 ±1.5 V) must have the capacity of Io = 20 mA (DC), 0.5 A (Peak).

Functional operation above the stresses listed in the Recommended Operating Ranges is not implied. Extended exposure to stresses beyond the Recommended Operating Ranges limits may affect device reliability.

Usage Precaution

1. This IPM includes internal bootstrap diode and resistor. By adding a bootstrap capacitor "CB", a high side drive voltage is generated; each phase requires an individual bootstrap capacitor. The recommended value of CB is in the range of 1 to 47 μF, however, this value needs to be verified prior to production. If selecting the capacitance more than 47 μF (±20%), connect a resistor (about 20 Ω) in series between each 3-phase upper side power supply terminals (VB1, 2, 3) and each bootstrap capacitor.
   When not using the bootstrap circuit, each upper side pre-drive power supply requires an external independent power supply.

2. It is essential that wirning length between terminals in the snubber circuit be kept as short as possible to reduce the effect of surge voltages. Recommended value of "CS" is in the range of 0.1 to 10 μF.

3. The "FLTEN" terminal (Pin 18) is I/O terminal; Fault output / Enable input. It is used to indicate an internal fault condition of the module and also can be used to disable the module operation.

4. Inside the IPM, a thermistor used as the temperature monitor for internal subatrate is connected between V_{SS} terminal and TH terminal, therefore, an external pull up resistor connected between the TH terminal and an external power supply should be used. The temperature monitor example application is as follows, please refer the Fig.9, and Fig.10 below.

5. The pull-down resistor (: 33 kΩ (typ)) is connected with the inside of the signal input terminal, but please connect the pull-down resistor(about 2.2 to 3.3 kΩ) outside to decrease the influence of the noise by wiring etc.

6. As protection of IPM to the unusual current by a short circuit etc,, it recommends installing shunt resistors and an over-current protection circuit outside. Moreover, for safety, a fuse on Vcc line is recommended.

7. Disconnection of terminals U, V, or W during normal motor operation will cause damage to IPM, use caution with this connection.
.

8. The "ITRIP" terminal (Pin 16) is the input terminal to shut down. When VITRIP exceeds threshold (0.44 to 0.54 V) all IGBT's are turned off. And normal operation resumes 2 ms (typ) after over current condition is removed. Therefore, please turn all the input signals off (Low) in case of detecting error at the "FLTEN" terminal.

9. When input pulse width is less than 1 μs, an output may not react to the pulse. (Both ON signal and OFF signal)

■ This data shows the example of the application circuit, and does not guarantee a design as the mass production set.

The characteristic of thermistor

Parameter	Symbol	Condition	Min	Typ.	Max	Unit
Resistance	R_{25}	T = 25°C	44.6	47.0	49.4	kΩ
Resistance	R_{125}	T = 125°C	1.28	1.41	1.53	kΩ
B-Constant (25 to 50°C)	B		4010	4050	4091	K
Temperature Range			−40		+125	°C

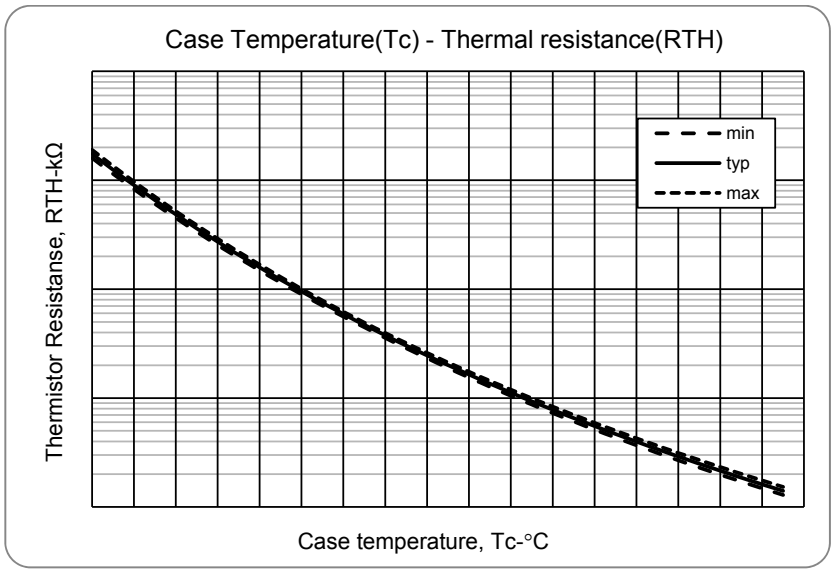

Fig.9 Variation of thermistor resistance with temperature

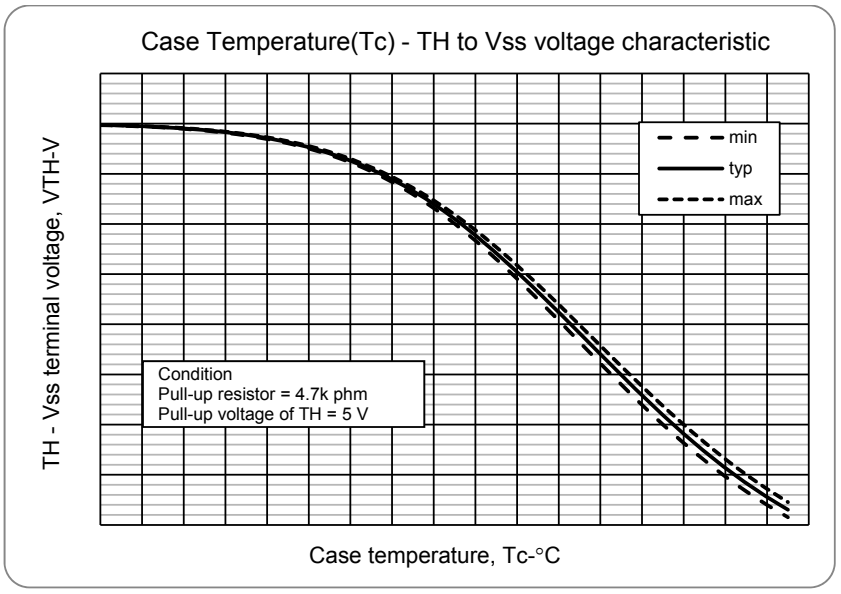

Fig.10 Variation of temperature sense voltage with thermistor temperature

Maximum Phase current

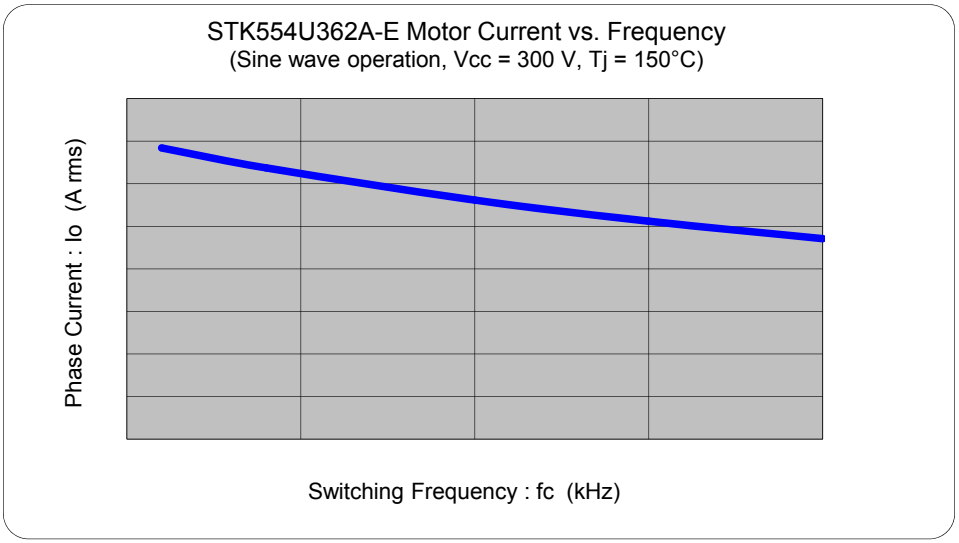

Fig.11 Maximum sinusoidal phase current as function of switching frequency at Tc = 100°C, V_{CC} = 300 V

Switching waveform

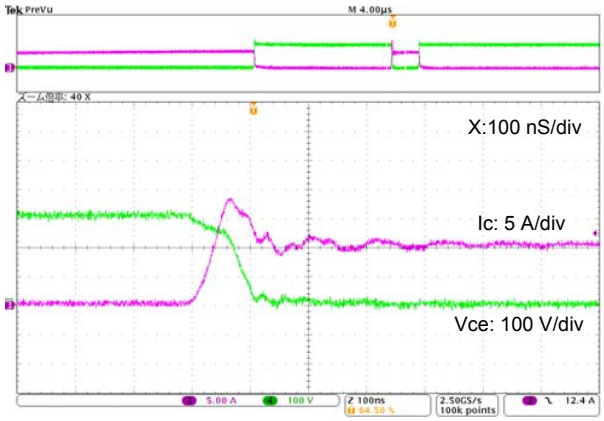

Fig. 12 IGBT Turn-on. Typical turn-on waveform at Tc = 100°C, V_{CC} = 300 V, Ic = 10 A

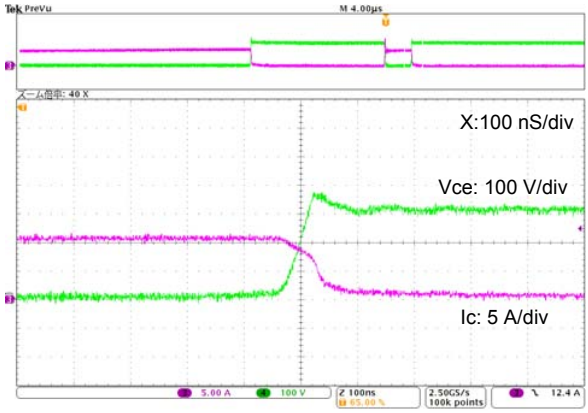

Fig. 13 IGBT Turn-off. Typical turn-off waveform Tc = 100°C, V_{CC} = 300 V, Ic = 10 A

CB capacitor value calculation for bootstrap circuit

Calculate condition

Item	Symbol	Value	Unit
Upper side power supply	VBS	15	V
Total gate charge of output power IGBT at 15 V	Qg	89	nC
Upper side power supply low voltage protection	UVLO	12	V
Upper side power dissipation	IDmax	400	μA
ON time required for CB voltage to fall from 15 V to UVLO	Ton-max	-	s

Capacitance calculation formula

CB must not be discharged below to the upper limit of the UVLO - the maximum allowable on-time (Ton-max) of the upper side is calculated as follows:

$$VBS \times CB - Qg - IDmax \times Ton\text{-}max = UVLO \times CB$$
$$CB = (Qg + IDmax \times Ton\text{-}max) / (VBS - UVLO)$$

The relationship between Ton-max and CB becomes as follows. CB is recommended to be approximately 3 times the value calculated above. The recommended value of CB is in the range of 1 to 47 μF, however, the value needs to be verified prior to production.

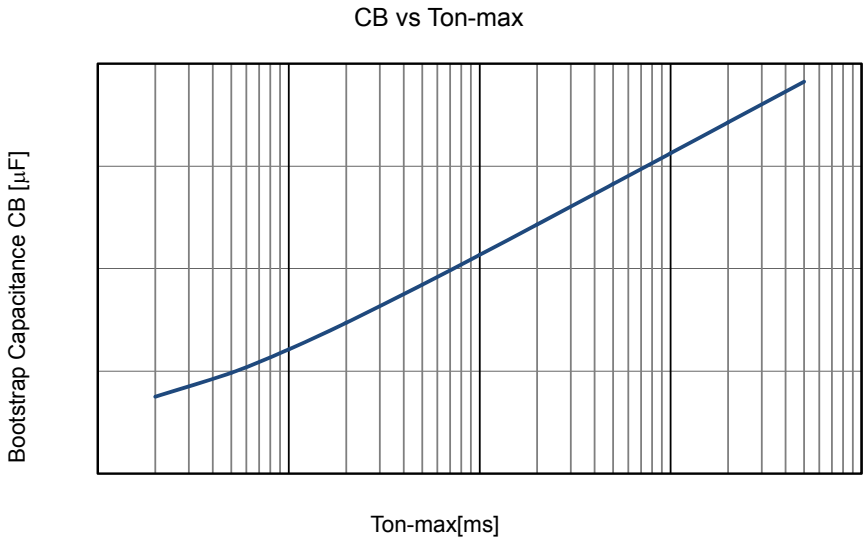

Fig.14 Ton-max vs CB characteristic

PACKAGE DIMENSIONS
unit : mm

The tolerances of length are +/− 0.5 mm unless otherwise specified.

SIP29 56x21.8
CASE 127BW
ISSUE O

missing pin : 3,4,7,8,11,12,14,15

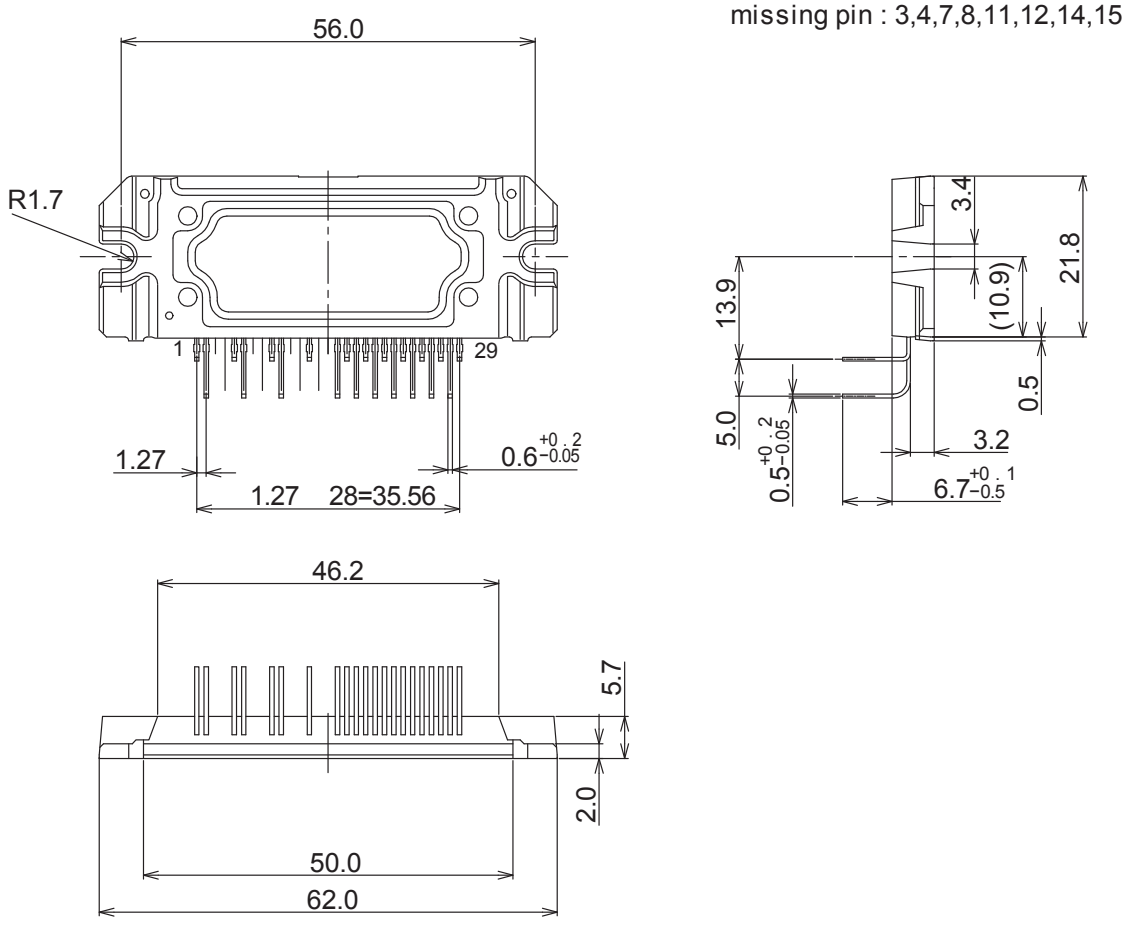

ORDERING INFORMATION

Device	Package	Shipping (Qty / Packing)
STK554U362A-E	SIP29 56x21.8 (Pb-Free)	8 / Tube

ON Semiconductor and the ON Semiconductor logo are trademarks of Semiconductor Components Industries, LLC dba ON Semiconductor or its subsidiaries in the United States and/or other countries. ON Semiconductor owns the rights to a number of patents, trademarks, copyrights, trade secrets, and other intellectual property. A listing of ON Semiconductor's product/patent coverage may be accessed at www.onsemi.com/site/pdf/Patent-Marking.pdf. ON Semiconductor reserves the right to make changes without further notice to any products herein. ON Semiconductor makes no warranty, representation or guarantee regarding the suitability of its products for any particular purpose, nor does ON Semiconductor assume any liability arising out of the application or use of any product or circuit, and specifically disclaims any and all liability, including without limitation special, consequential or incidental damages. Buyer is responsible for its products and applications using ON Semiconductor products, including compliance with all laws, regulations and safety requirements or standards, regardless of any support or applications information provided by ON Semiconductor. "Typical" parameters which may be provided in ON Semiconductor data sheets and/or specifications can and do vary in different applications and actual performance may vary over time. All operating parameters, including "Typicals" must be validated for each customer application by customer's technical experts. ON Semiconductor does not convey any license under its patent rights nor the rights of others. ON Semiconductor products are not designed, intended, or authorized for use as a critical component in life support systems or any FDA Class 3 medical devices or medical devices with a same or similar classification in a foreign jurisdiction or any devices intended for implantation in the human body. Should Buyer purchase or use ON Semiconductor products for any such unintended or unauthorized application, Buyer shall indemnify and hold ON Semiconductor and its officers, employees, subsidiaries, affiliates, and distributors harmless against all claims, costs, damages, and expenses, and reasonable attorney fees arising out of, directly or indirectly, any claim of personal injury or death associated with such unintended or unauthorized use, even if such claim alleges that ON Semiconductor was negligent regarding the design or manufacture of the part. ON Semiconductor is an Equal Opportunity/Affirmative Action Employer. This literature is subject to all applicable copyright laws and is not for resale in any manner.