STK525

Hardware User Guide

Section 1

Introduction 1-3

1.1 Overview 1-3

1.2 STK525 Starter Kit Features 1-4

Section 2

Using the STK525 2-6

2.1 Overview 2-6

2.2 Power Supply 2-7

2.3 RESET 2-10

2.4 AT90USBxxx AVR Microcontroller 2-11

2.5 Serial Links 2-11

2.6 On-board Resources 2-14

2.7 STK500 Resources 2-19

2.8 In-System Programming 2-20

2.10 Test Points 2-23

2.11 Configuration Pads 2-24

2.12 Solder Pads 2-25

Section 3

Troubleshooting Guide 3-26

Section 4

Technical Specifications 4-27

Section 5

Technical Support 5-28

Section 6

Complete Schematics 6-29

Section 1

Introduction

Congratulation for acquiring the AVR® STK525 Starter Kit. This kit is designed to give designers a quick start to develop code on the AT90USBxxx and for prototyping and testing of new designs.

1.1 Overview

This document describes the STK525 dedicated to the AT90USBxxx AVR microcontroller. This board is designed to allow an easy evaluation of the product using demonstration software.

To complement the evaluation and enable additional development capability, the STK525 can be plugged into the Atmel STK500 Starter Kit Board in order to use the AT90USBxxx with advanced features such as variable VCC, variable VRef, variable XTAL, etc. and supports all AVR development tools.

To increase its demonstrative capabilities, this stand alone board has numerous on-board resources (USB, RS232, joystick, data-flash, microphone and temperature sensor).

This user guide acts as a general getting started guide as well as a complete technical reference for advanced users.

Figure 1-1 . STK525 Board

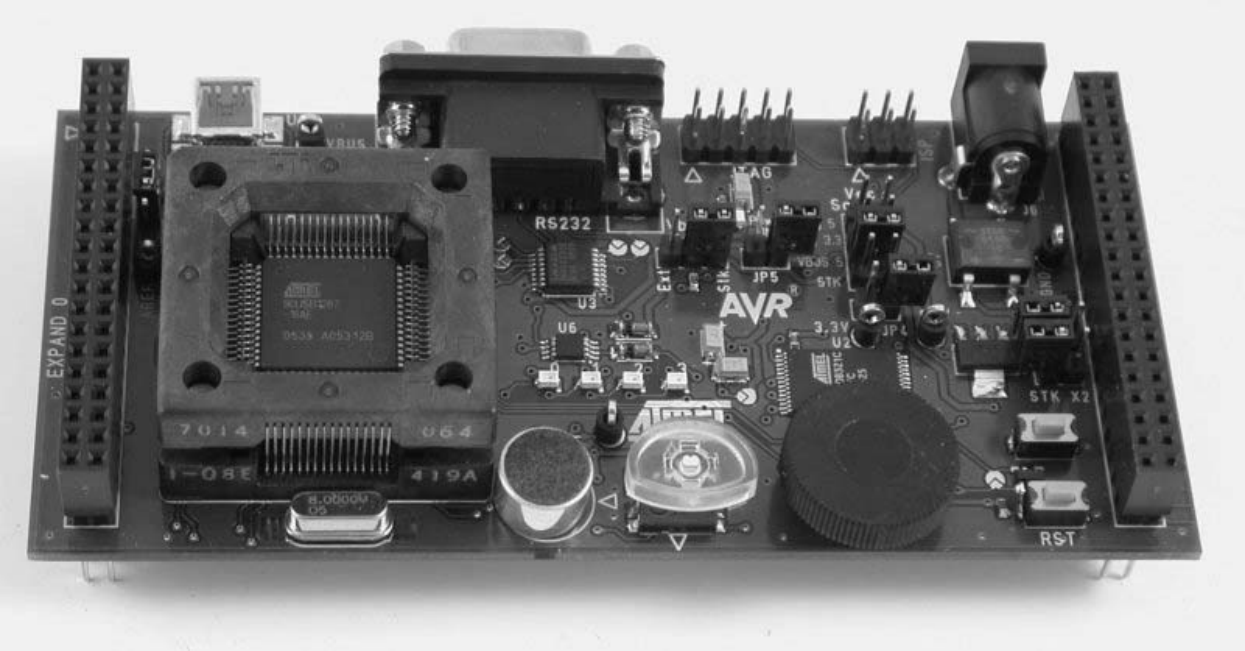

1.2 STK525 Starter Kit Features

The STK525 provides the following features:

- AT90USBxxx TQFP device (2.7V<Vcc<5.5V),
- AVR Studio® software interface (1),
- USB software interface for Device Firmware Upgrade (DFU bootloader) (2)
- STK500 compatible
- Power supply flagged by “VCC-ON” LED:
  - regulated 3 or 5V,
  - from an external power connector,
  - from the USB interface (USB device bus powered application),
  - from STK500 (2),
- ISP connector for on-chip ISP,
- JTAG connector:
  - for on-chip ISP,
  - for on-chip debugging using JTAG ICE,
- Serial interfaces:
  - 1 USB full/low speed device/host interface
  - RS-232C ports with RTS/CTS handshake lines,
- On-board resources:
  - 4+1-ways joystick,
  - 4 LEDs,
  - temperature sensor,
  - microphone,
  - serial dataflash memory,

- On-board RESET button,
- On-board HWB button for force bootloader section execution at reset.
- System clock:
  - external clock from STK500 expand connectors
  - 8 MHz crystal,
- Numerous access points for test.

Notes:
1. The STK525 is supported by AVR Studio®, version 4.12SP2 or higher. For up-to-date information on this and other AVR tool products, please consult our web site. The newest version of AVR Studio®, AVR tools and this User Guide can be found in the AVR section of the Atmel web site, http://www.atmel.com.
2. ATMEL Flip®, In System Programming Version 3 or Higher shall be used for Device Firmware Upgrade. Please consult Atmel web site to retrieve the latest version of Flip and the DFU bootloader Hex file if needed.

Section 2

Using the STK525

This chapter describes the board and all its features.

2.1 Overview

Figure 2-1 . STK525 Overview

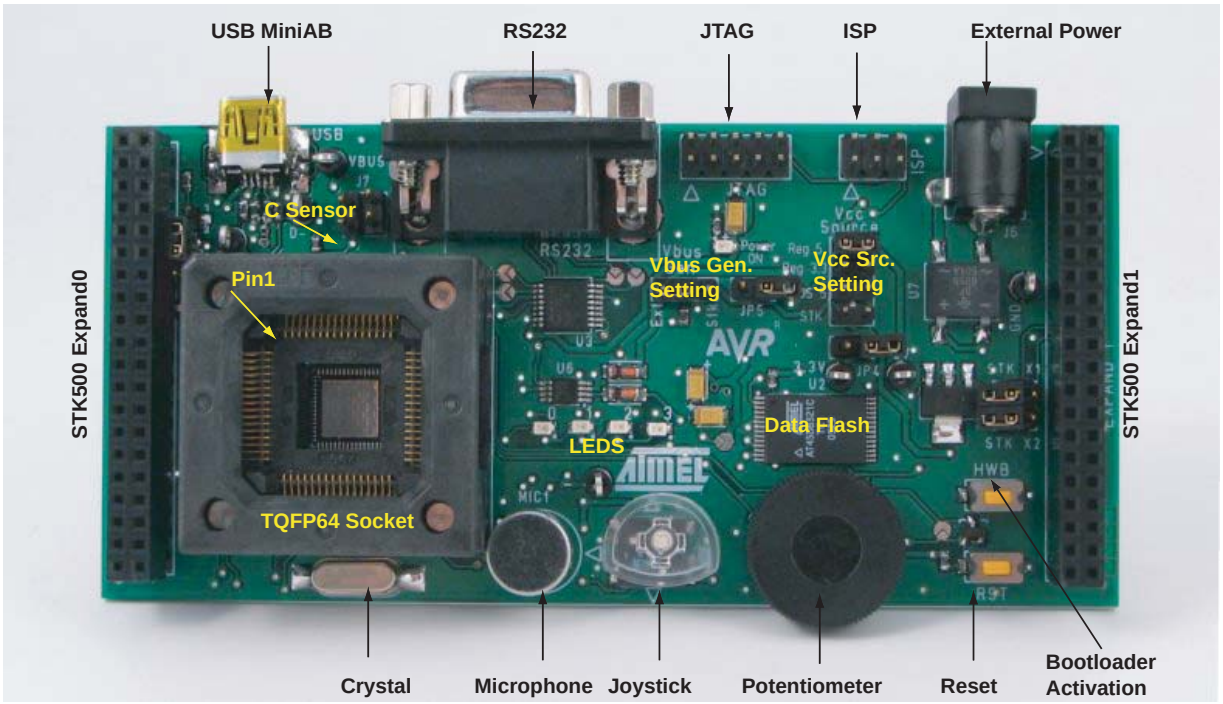

2.2 Power Supply

The on-board power supply circuitry allows various power supply configurations.

2.2.1 Power Supply Sources

The power supply source can come from three different (3) and **exclusive** sources:

- USB connector,
- JACK PWR connector (J6, See Figure 2-2),
- STK500

USB powered: When used as a USB device bus powered application, the STK525 can be powered via the USB VBUS power supply line.

JACK PWR connector:
- Need of a male JACK outlet,
- Input supply from 9 up to 15V (1) DC,
- No specific polarization (2) is required.

Figure 2-2 . JACK PWR Connector (J6)

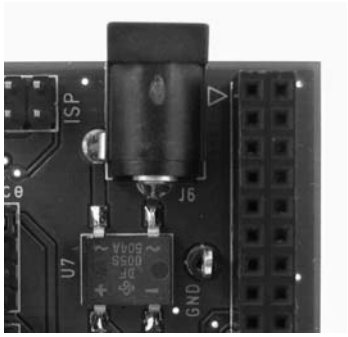

Figure 2-3 . Male JACK Outlet and Wires



STK500 Powered: (c.f. “STK500 Resources” on page 19).

Notes:
1. 15V is the maximum level limitation of an unidirectional transit diode.
2. There is a diode (bridge) voltage level between the negative output of the power supply and the STK525 “GND”. This could introduce some gap of voltage during measurement and instrumentation.
3. **Caution**: Do not mount more than **one** power supply source on STK525.

2.2.2 Power Supply Setting

Table 2-1 . Power Supply (1) Setting

Vcc Source Jumper position	VCC power supply value	Comments	View
VBUS 5	**VBUS (4,7V to 5.0V)**	This is the default configuration. This should be used for a typical USB device “bus powered” application. In this mode, the STK525 is powered directly from the USB bus, and no other external power supply is required.	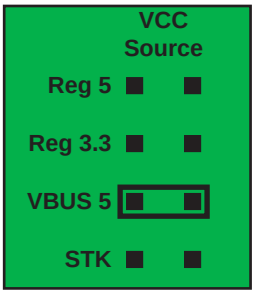
REG 5	**5V**	This configuration can be used for a USB “self powered” device application” or when operating has a USB host. To use this configuration an external power supply must be connected to J6 connector.	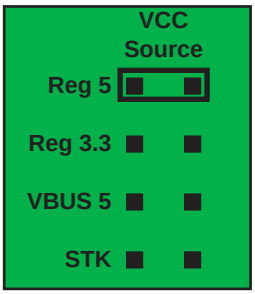
REG 3.3	**3.3V**	This configuration allows the STK525 to be used in a 3V range application. This configuration can be used with both device or host mode USB applications. To use this configuration an external power supply must be connected to J6 connector.	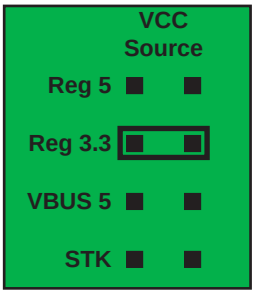
STK	**Depends on STK500 VTG setting**	This configuration allows the STK525 to be used with an STK500 board. In this mode, the STK525 power supply is generated and configured according to the “VTG” parameter of the STK500 (1).	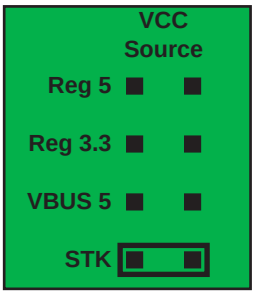

Notes: 1. **Caution:** The STK500 has its own “ON/OFF” switch

2.2.3 VBUS Generator Setting

When using the AT90USBxxx microcontroller in USB host mode. The STK525 should provide a 5V power supply over the VBUS pin of its USB mini AB connector.

A couple of transistors on the STK525 allows the UVCON pin of the AT90USBxxx to control the VBUS generation (See Figure 2-4). In this mode the STK525 is powered by external power supply source (J6 or STK500 expand0/1 connectors). JP7 allows to select the 5V source used by the VBUS generator.

Figure 2-4 . VBUS generator schematic

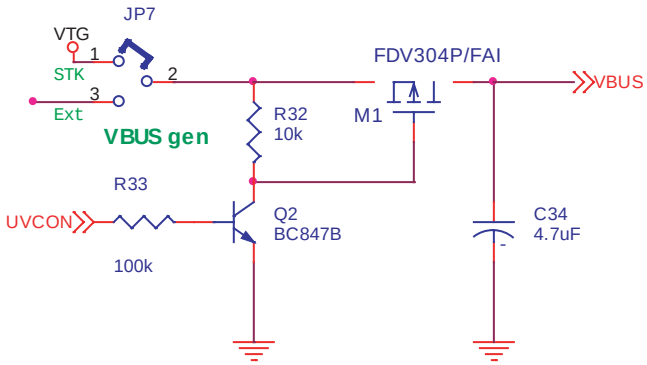

Table 2-2 . VBUS Generator Setting

"Vbus Gen" Jumper position	STK525 power supply	Comments	View
"Ext"	External power supply from J6	This is the default configuration. The VBUS generator source is the on-board 5V regulator.	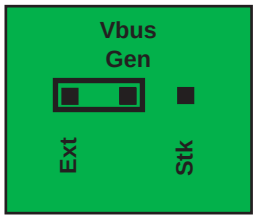
"Stk"	External power supply from Expand0/1 (connected to a STK500)	The VBUS generator source is the STK500. Note: The "Vtarget" setting of STK500 should be set to "5V".	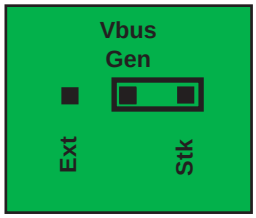

2.2.4 "POWER-ON" LED

The POWER-ON LED is always lit when power is applied to STK525 regardless of power supply source and the regulation.

Figure 2-5 . "VCC-ON" LED

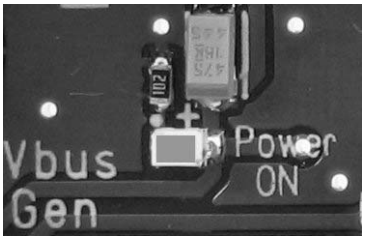

2.3 RESET

Although the AT90USBxxx has its on-chip RESET circuitry (c.f. AT90USBxxx Datasheet, section "System Control and Reset), the STK525 provides the AT90USBxxx a RESET signal which can come from 3 different sources:

2.3.1 Power-on RESET

The on-board RC network acts as power-on RESET.

2.3.2 RESET Push Button

By pressing the RESET push button on the STK525, a warm RESET of the AT90USBxxx is performed.

Figure 2-6 . RESET Push Button (RST) Implementation

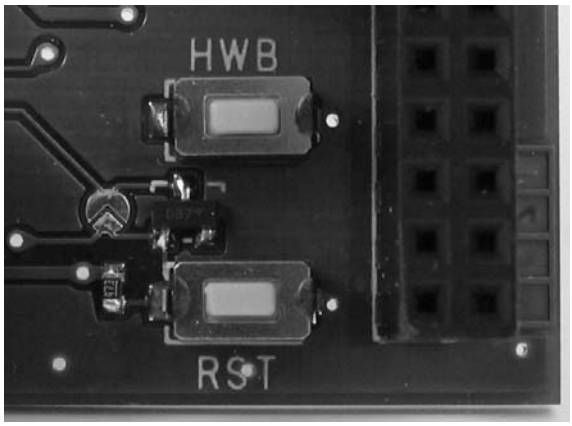

2.3.3 STK500 RESET

(c.f. “RESET from STK500” on page 20)

2.4 AT90USBxxx AVR Microcontroller

2.4.1 Main Clock XTAL

To use the USB interface of the AT90USBxxx, the clock source should always be a crystal or external clock oscillator (the internal 8MHz RC oscillator cannot be used to operate with the USB interface). Only the following crystal frequency allows proper USB operations: 2MHz, 4MHz, 6MHz, 8MHz, 12MHz, 16MHz. The STK525 comes with a default 8MHz crystal oscillator.

When closing STKX1 and STKX2 switches, and STK525 is connected to an STK500, the STK525 can operate with the “STK500 Osc” frequency parameter.

2.4.2 Analog Power Supply

AVCC By default, AVCC is equivalent to VCC.

ANA REF By default, AREF is an output of AT90USBxxx.
An external AREF source can be chosen (c.f. “STK500 Resources” on page 19).

2.5 Serial Links

2.5.1 USB

The STK525 is supplied with a standard USB mini A-B receptacle. The mini AB receptacle allows to connect both a mini A plug or a mini B plug connectors.

Figure 2-7 . USB mini A-B Receptacle

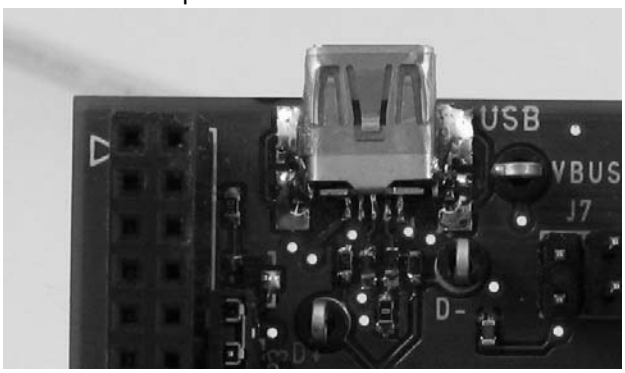

When connected to a mini B plug, the AT90USBxxx operates as an “USB device” (the ID pin of the plug is unconnected) and when connected to a mini A plug, the AT90USBxxx operates as a “USB host” (the ID pin of the plug is tied to ground).

2.5.2 RS-232C

The AT90USBxxx is a microcontroller with an on-chip USART peripheral (USART1). Only the asynchronous mode is supported by the STK525.

The STK525 is supplied with a RS-232 driver/receiver. One female DB9 connector assumes the RS-232 connections.

Figure 2-8 . RS-232 DB9 Connector

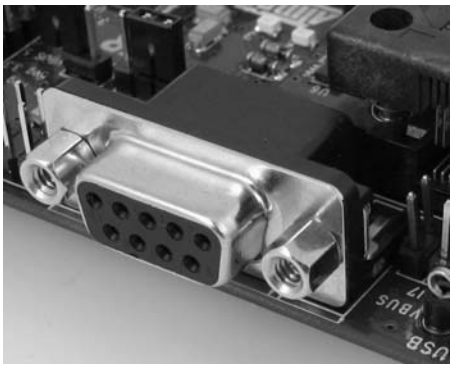

Figure 2-9 . RS-232 DB9 Connections

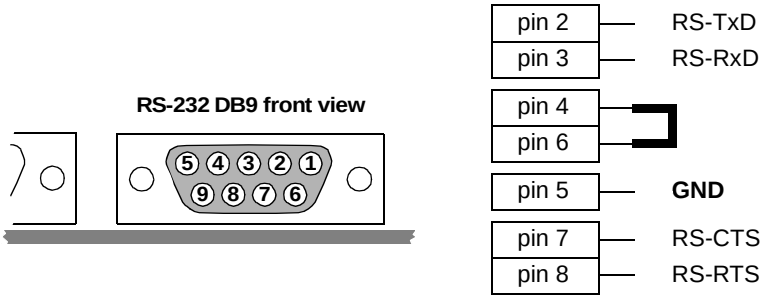

Figure 2-10 . Typical PC Connection Layout

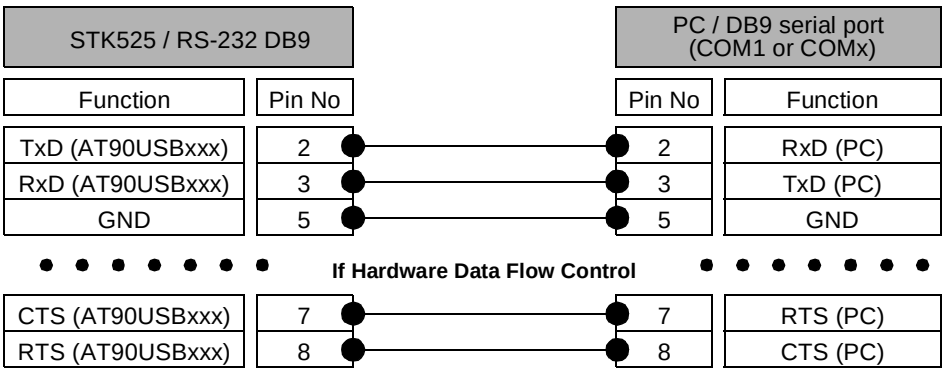

The STK525 USART implementation allows an optional hardware flow control that can be enabled thanks to SP4, SP5, SP7, SP8 solder pads (See Figure 2-11).

Figure 2-11 . USART Schematic

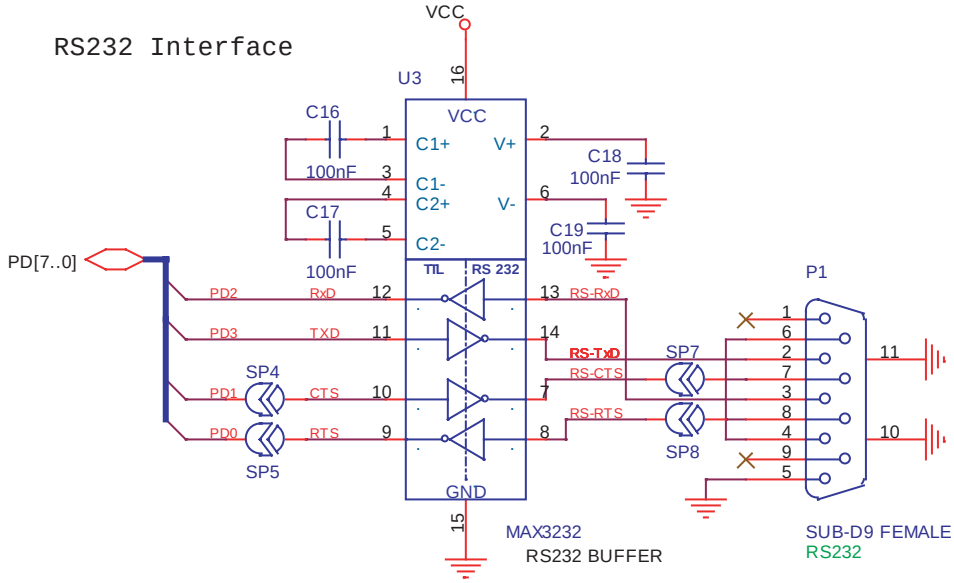

Table 2-3 . UART Settings

Mode	Solder Pads Configuration	DB9 Connection (1)	
Software Data Flow Control (default configuration)	SP4: open SP5: open SP7: open SP8: open	Tx Rx	Pin 2 Pin 3
Optional Hardware Flow Control	SP4: close SP5: close SP7: close SP8: close	Tx Rx CTS RTS	Pin 2 Pin 3 Pin 7 Pin 8

Note: 1. Tx reference: STK525 source, Rx reference: STK525 destination

2.6 On-board Resources

2.6.1 Joystick

The 4+1 way joystick offers an easy user interface implementation for a USB application (it can emulate mouse movements, keyboard inputs, etc.).
Pushing a push-button causes the corresponding signal to be pulled low, while releasing (not pressed) causes an H.Z state on the signal. The user must enable internal pull-ups on the input pins, removing the need for an external pull-up resistors on the push-button.

Figure 2-12 . Joystick Schematic

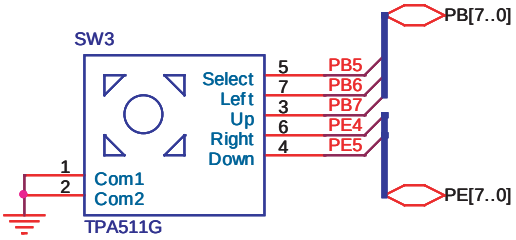

Figure 2-13 . Joystick Implementation

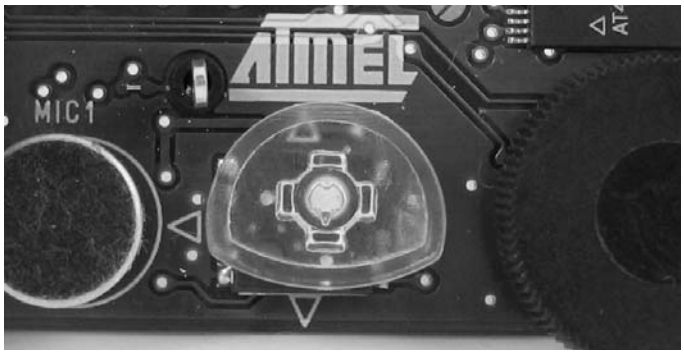

2.6.2 LEDs

The STK525 includes 4 green LEDs implemented on one line. They are connected to the high nibble of “Port D” of AT90USBxxx (PORTD[4..7]).

To light On a LED, the corresponding port pin must drive to high level. To light Off a LED, the corresponding port pin must drive a low level. It is the opposite method used in STK500.

Figure 2-14 . LEDs Implementation Schematic

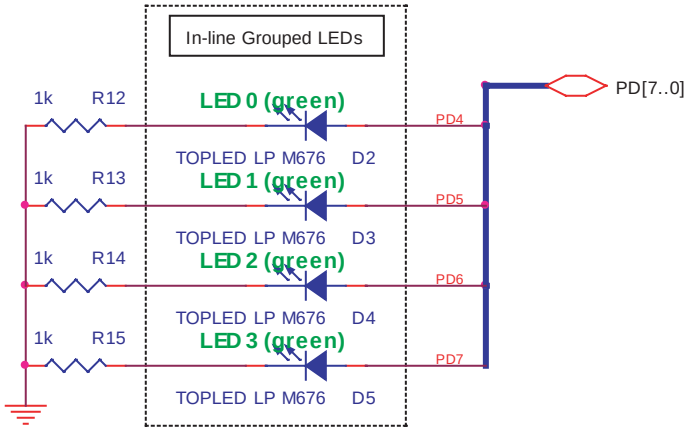

2.6.3 Temperature Sensor

The temperature sensor uses a thermistor (R18), or temperature-sensitive resistor. This thermistor has a negative temperature coefficient (NTC), meaning the resistance goes up as temperature goes down. Of all passive temperature measurement sensors, thermistors have the highest sensitivity (resistance change per degree of temperature change). Thermistors do not have a linear temperature/resistance curve.

The voltage over the NTC can be found using the A/D converter (connected to channel 0). See the AT90USBxxx datasheet for how to use the ADC. The thermistor value (R_T) is calculated with the following expression:

$$R_T = (R_H \cdot V_{ADC0}) / (VCC - V_{ADC0})$$

Where:
- R_T = Thermistor value (Ω) at **T** temperature (°Kelvin)
- R_H = Second resistor of the bridge -100 KΩ ±10% at 25°C
- V_{ADC0} = Voltage value on ADC-0 input (V)
- **V**CC = Board power supply

The NTC thermistor used in STK525 has a resistance of 100 KΩ ±5% at 25°C (T_0) and a beta-value of 4250 ±3%. By the use of the following equation, the temperature (T) can be calculated:

$$T = \frac{\beta}{\left(\ln\frac{R_T}{R_0}\right) + \frac{\beta}{T_0}}$$

Where:
- R_T = Thermistor value (Ω) at **T** temperature (°Kelvin)
- **ß** = 4250 ±3%
- R_0 = 100 KΩ ±5% at 25°C
- T_0 = 298 °K (273 °K + 25°K)

The following cross table also can be used. It is based on the above equation.

Table 2-4 . Thermistor Values versus Temperature

Temp. (°C)	R_T (KΩ)	Temp. (°C)	R_T (KΩ)	Temp. (°C)	R_T (KΩ)	Temp. (°C)	R_T (KΩ)
-20	1263,757	10	212,958	40	50,486	70	15,396
-19	1182,881	11	201,989	41	48,350	71	14,851
-18	1107,756	12	191,657	42	46,316	72	14,329
-17	1037,934	13	181,920	43	44,380	73	13,828
-16	973,006	14	172,740	44	42,537	74	13,347
-15	912,596	15	164,083	45	40,781	75	12,885
-14	856,361	16	155,914	46	39,107	76	12,442
-13	803,984	17	148,205	47	37,513	77	12,017
-12	755,175	18	140,926	48	35,992	78	11,608
-11	709,669	19	134,051	49	34,542	79	11,215
-10	667,221	20	127,555	50	33,159	80	10,838

Temp. (°C)	RT (KΩ)	Temp. (°C)	RT (KΩ)	Temp. (°C)	RT (KΩ)	Temp. (°C)	RT (KΩ)
-9	627,604	21	121,414	51	31,840	81	10,476
-8	590,613	22	115,608	52	30,580	82	10,128
-7	556,056	23	110,116	53	29,378	83	9,793
-6	523,757	24	104,919	54	28,229	84	9,471
-5	493,555	25	100,000	55	27,133	85	9,161
-4	465,300	26	95,342	56	26,085	86	8,863
-3	438,854	27	90,930	57	25,084	87	8,576
-2	414,089	28	86,750	58	24,126	88	8,300
-1	390,890	29	82,787	59	23,211	89	8,035
0	369,145	30	79,030	60	22,336	90	7,779
1	348,757	31	75,466	61	21,498	91	7,533
2	329,630	32	72,085	62	20,697	92	7,296
3	311,680	33	68,876	63	19,930	93	7,067
4	294,826	34	65,830	64	19,196	94	6,847
5	278,995	35	62,937	65	18,493	95	6,635
6	264,119	36	60,188	66	17,820	96	6,430
7	250,134	37	57,576	67	17,174	97	6,233
8	236,981	38	55,093	68	16,556	98	6,043
9	224,606	39	52,732	69	15,964	99	5,860

Figure 2-15 . Thermistor Schematic

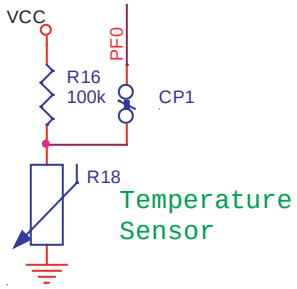

2.6.4 Microphone

The STK525 provides an electret microphone associated with its required preamplifier (See Figure 2-16), the interface is connected to ADC channel 2 of the AT90USBxxx microcontroller.

Figure 2-16 . Microphone interface schematic

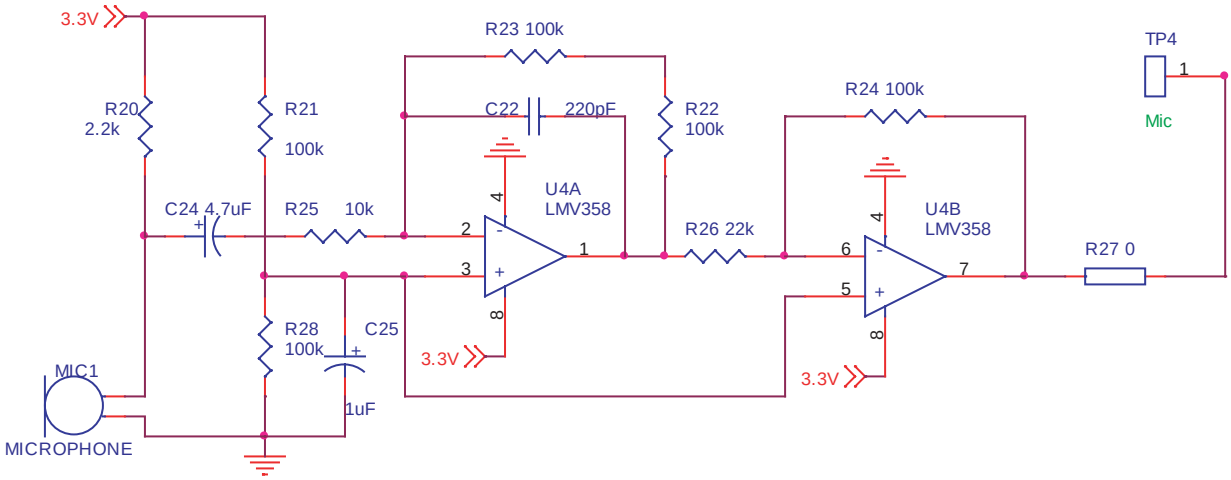

2.6.5 Data Flash Memory

For mass-storage class demonstration purposes, the STK525 provides an on-chip serial Flash memory (AT45DB321x) connected to the AT90USBxxx Serial Port Interface (SPI).

The data-flash chip select signal is connected to PortB bit 4 of the AT90USBxxx (See Figure 2-17).

Figure 2-17 . On-board data flash schematic

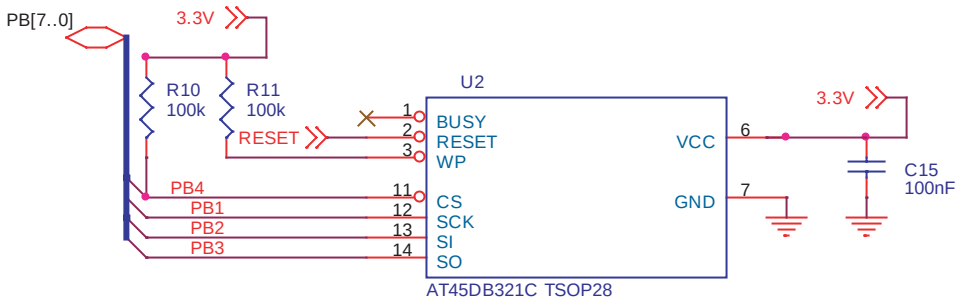

2.6.6 Potentiometer

The cursor of a potentiometer is connected to ADC channel 1 of the AT90USBxxx.

2.7 STK500 Resources

Figure 2-18 . Connecting STK525 to the STK500 Board

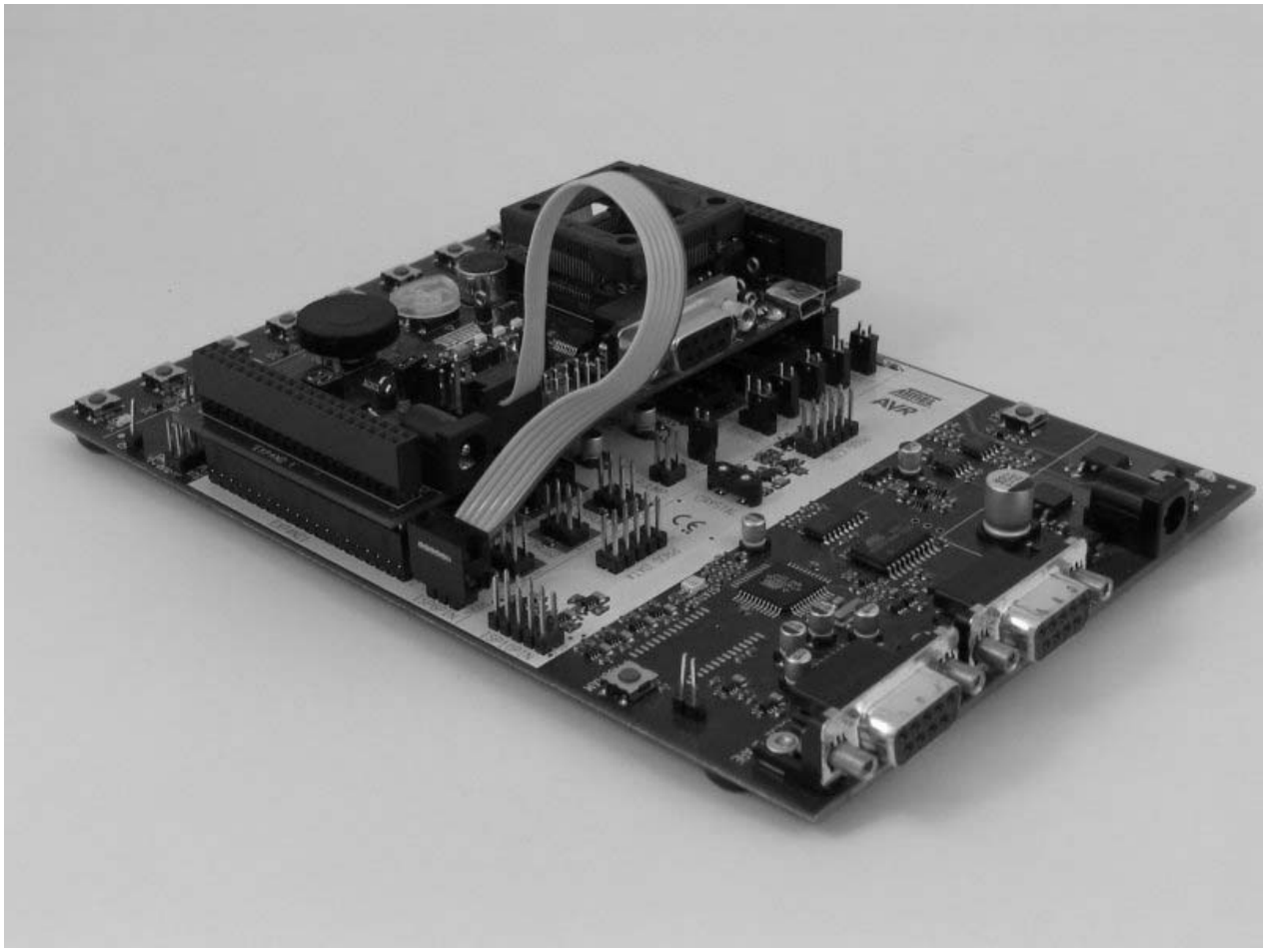

Note: **Caution:** Do not mount an AVR microcontroller on the STK500 board when STK525 is plugged on STK500.

2.7.1 Supply Voltage from STK500

The AVR supply voltage coming from STK500 (VTG) can also be controlled from AVR Studio®.

- The supply voltage coming from STK500 is controlled by power supply circuitry of the STK525. Refer to Table 2-1 on page 8 to configure “Vcc Source” jumper.

2.7.2 Analog Reference Voltage from STK500

The AVR Analog Reference Voltage coming from STK500 (REF) can also be controlled from AVR Studio®.

- JP3 should be closed

2.7.3 EXP.CON 0 & EXP.CON 1 Connectors

Figure 2-19 . EXP.CON 0 and EXP.CON 1 Connectors

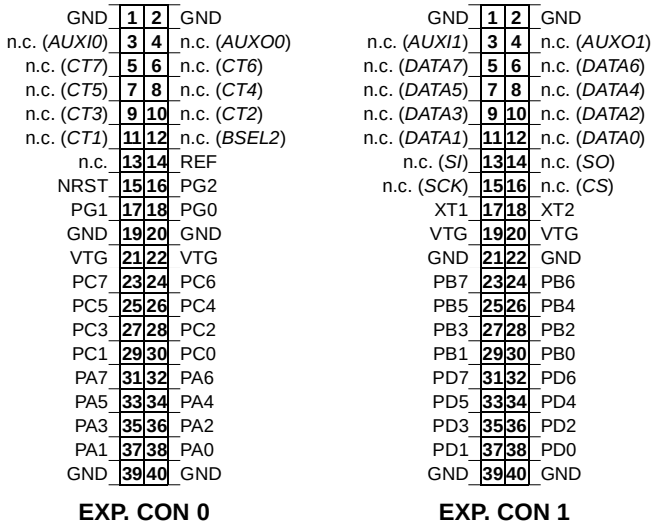

2.7.4 Main Clock from STK500

The AVR clock frequency (external) coming from STK500 (XT1/XT2) can also be controlled from AVR Studio®.

- “STKX1” and ”STKX2” jumpers should be closed

2.7.5 RESET from STK500

The AVR RESET coming from STK500 (NRST - EXP.CON 0) can also control the STK525. STK525 is protected against +12V RESET pulse (parallel programing not allowed for AT90USBxxx on STK525) coming from STK500.

2.8 In-System Programming

2.8.1 Programming with USB bootloader: DFU (Device Firmware Upgrade)

AT90USBxxx part comes with a default factory pre-programmed USB bootloader located in the on-chip boot section of the AT90USBxxx. This is the easiest and fastest way to reprogram the device directly over the USB interface. The “Flip” PC side application available for free on Atmel website offers a flexible and user friendly interface to reprogram the application over the USB bus.

The HWB pin of the AT90USBxxx allows to force the bootloader section execution after reset. (Refer to AT90USBxxx datasheet section “boot loader support”). To force bootloader execution, operate as follows:

- Press both “RST” and “HWB” push buttons
- First release the “RST” push button
- Release the “HWB” push button

For more information about the USB bootloader and FLIP software, please refer to the ‘USB bootloader datasheet’ document and ‘FLIP User Manual’.

2.8.2 Programming with AVR ISP mkII Programmer

The AT90USBxxx can be programmed using specific SPI serial links. This sub section will explain how to connect the programmer.

The Flash, EEPROM and all Fuses and Lock Bits options ISP-programmable can be programmed individually or with the sequential automatic programming option.

The AVR ISP mkII programmer is a compact and easy-to-use In-System Programming tool for developing applications with AT90USBxxx. Due to the small size, it is also an excellent tool for field upgrades of existing applications.

The AVR ISP programming interface is integrated in AVR Studio®.

To program the device using AVR ISP programmer, connect the 6-wire cable on the ISP connector of the STK525 as shown in Figure 2-20.

Note: See AVR Studio® on-line Help for information.

Figure 2-20 . Programming from AVR ISP mkII programmer

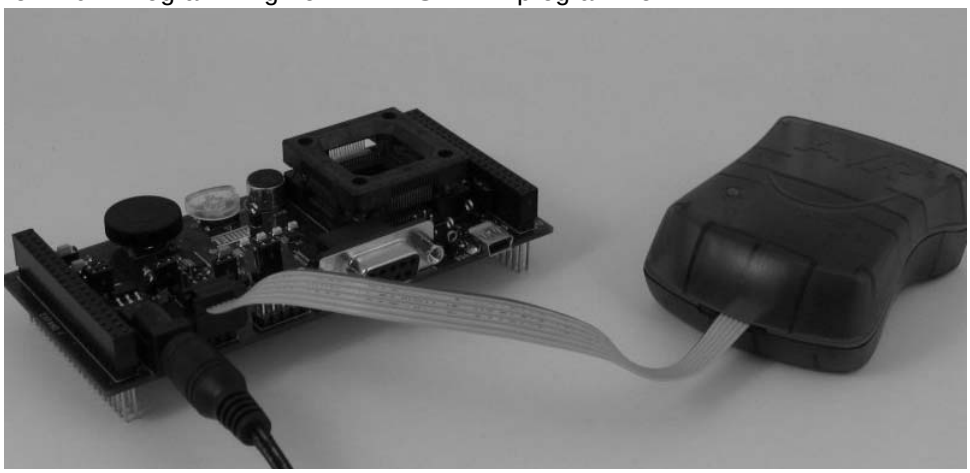

2.8.3 Programming with STK500

The AT90USBxxx can be programmed using the serial programming mode in the AVR Studio STK500 software. The software interface (In-System Programming of an external target system) is integrated in AVR Studio®.

To program the device using ISP from STK500, connect the 6-wire cable between the ISP6PIN connector of the STK500 board and the ISP connector of the STK525 as shown in Figure 2-18.

Note: See AVR Studio® on-line Help for information.

Note: The high voltage parallel programming mode with STK500 is not available for an STK525. To reprogram an AT90USBxxx part in parallel mode, use an STK501 extension board (AT90USBxxx product pinout is compatible with the STK501 parallel programing mode).

2.8.4 Programming with AVR JTAG ICE

The AT90USBxxx can be programmed using specific JTAG link. This sub-section will explain how to connect and use the AVR JTAG ICE.

Note: When the JTAGEN Fuse is unprogrammed, the four TAP pins are normal port pins, and the TAP controller is in reset. When programmed, the input TAP signals are internally pulled high and the JTAG is enabled for Boundary-scan and programming. The AT90USBxxx device is shipped with this fuse programmed.

Figure 2-21 . Connecting AVR JTAG ICE to STK525

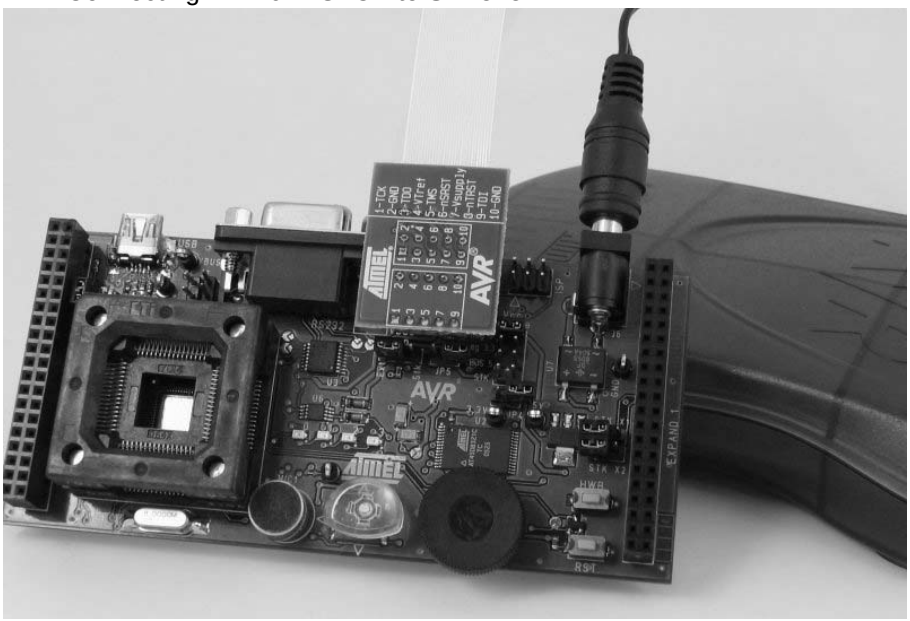

The Flash, EEPROM and all Fuse and Lock Bit options ISP-programmable can be programmed individually or with the sequential automatic programming option.

Note: See AVR Studio® on-line Help for information.

2.9 Debugging

2.9.1 Debugging with AVR JTAG ICE mkII

Every STK525 can be used for debugging with JTAG ICE MK II.

Connect the JTAG ICE mkII as shown in Figure 2-21, for debugging help, please refer to AVR Studio® Help information.

When using JTAG ICE MK II for debugging, and as AT90USBxxx parts are factory configured with the higher security level set, a chip erase operation will be performed on the part before debugging. Thus the on-chip flash bootloader will be erased. It can be restored after the debug session using the bootloader hex file available from ATMEL website.

2.10 Test Points

There are 8 test points implemented, these test points are referred in the full schematics section.

Config. Pads Reference	Related Signals	Function
T1	D+	USB D+ data line
T2	D-	USB D- data line
T3	Aref	Analog reference
T4	Mic	Microphone preamplifier output
T5	3.3V	3.3V internal power supply
T6	5V	5V internal power supply
T7	Gnd	Ground
T8	Vbus	USB Vbus power supply

2.11 Configuration Pads

Configuration pads are used to disconnect/connect on-board peripherals or elements, their default configuration is: **connect**.

2.11.1 Configuration Pads Listing

Table 2-5 . Configuration Pads

Config. Pads Reference	Related Signals	Function
CP1	°c sensor (PF0)	This configuration pad is used to disconnect/connect the CTN sensor from STK525.
CP2	pot. (PF1)	This configuration pad is used to disconnect/connect the potentiometer from STK525.
CP3	Mic.(PF2)	This configuration pad is used to disconnect/connect the microphone preamplifier output from STK525.

2.11.2 Configuration Pads - Disconnection

Figure 1. Configuration Pad - Disconnection



Cut Connection

2.11.3 Configuration Pads - Connection

Figure 2. Configuration Pad - Re-connection



Droplet of Solder **Wire**

2.12 Solder Pads

Solder pads are used to disconnect/connect on-board peripherals or elements, their default configuration is: **disconnect**.

2.12.1 Solder Pads Listing

Table 2-6 . Solder Pads

Solder. Pads Reference	Related Signals	Function
SP1	AVCC/VCC	This solder pad can be used to bypass L1.
SP2	NRST/RESET	This solder pad can be used to bypass D1.
SP3	3.3V	This solder pad is reserved to connect 3.3V power supply to the N.C pin of Expand0/1
SP4	PD1/CTS	This solder pad allows to enable the logical CTS signal for hardware control flow on RS232 interface.
SP5	PD0/RTS	This solder pad allows to enable the logical RTS signal for hardware control flow on RS232 interface.
SP6	VBUS	This solder pad allows to bypass U5 VBUS current limiter.
SP7	RS-CTS	This solder pad allows to enable the physical CTS signal for hardware control flow on RS232 interface.
SP8	RS-RTS	This solder pad allows to enable the physical RTS signal for hardware control flow on RS232 interface.

Section 3

Troubleshooting Guide

Figure 3-1 . Troubleshooting Guide

Problem	Reason	Solution
The Green “VCC-ON” LED is not on	No power supply	Verify the power supply source
		Verify the power supply source
STK525 does not work		Connect the DC power supply source, or USB interface or STK500.
The AT90USBxxx cannot be programmed	The STK500 ISP header is not connected.	Connect a 6-pin flexible cable from STK500 ISP 6-PIN header to the correct STK525 ISP header (page 21)
	The AVR ISP probe is not connected	Connect the AVR ISP 6-PIN header to the correct STK525 ISP header (page 21)
	The AVR JTAG ICE probe is not connected	Connect the JTAG ICE 10-PIN header to the correct STK525 JTAG header (page 22)
	The memory lock bits are programmed	Erase the memory before programming
	The fuse bits are wrongly programmed	Check the fuse bits
	Programming too fast with ISP SPI	Check oscillator settings and make sure it is not set higher than SPI clock
AVR Studio does not detect the AVR tool used	Serial/USB cable is not connected, or power is off	Connect serial cable to RS232 (STK500 - AVR ISP) and check power connections
		Connect serial cable to USB (JATG ICE MKII, AVR ISPmkIII) and check power connections
	PC COM port is in use	Disable other programs that are using PC COM port.
		Change PC COM port
	AVR Studio does not detect COM port.	Disable COM port auto-detection in AVR Studio file menu. Force COM port to correct COM port

Section 4

Technical Specifications

- **System Unit**
  - Physical Dimensions ..... L=119 x W=56 x H=27 mm
  - Weight ..... 70 g

- **Operating Conditions**
  - Internal Voltage Supply ..... 2.7V - 5.5V
  - External Voltage Supply ..... 9V -15V (100mA)

- **Connections**
  - USB Connector ..... Mini AB receptacle
  - USB Communications ..... Full speed/low speed
  - RS 232C Connector ..... 9-pin D-SUB female
  - RS 232C Communications Maximum Speed ..... 250 kbps

Section 5

Technical Support

For Technical support, please contact avr@atmel.com. When requesting technical support, please include the following information:

- Which target AVR device is used (complete part number)
- Target voltage and speed
- Clock source and fuse setting of the AVR
- Programming method (ISP, JTAG or specific Boot-Loader)
- Hardware revisions of the AVR tools, found on the PCB
- Version number of AVR Studio. This can be found in the AVR Studio help menu.
- PC operating system and version/build
- PC processor type and speed
- A detailed description of the problem

Section 6

Complete Schematics

On the next pages, the following documents of STK525 revision 4381A are shown:

- Complete schematics,
- Assembly drawing,
- Bill of materials.
- Default configuration summary

Figure 6-1 . Schematics, 1 of 5

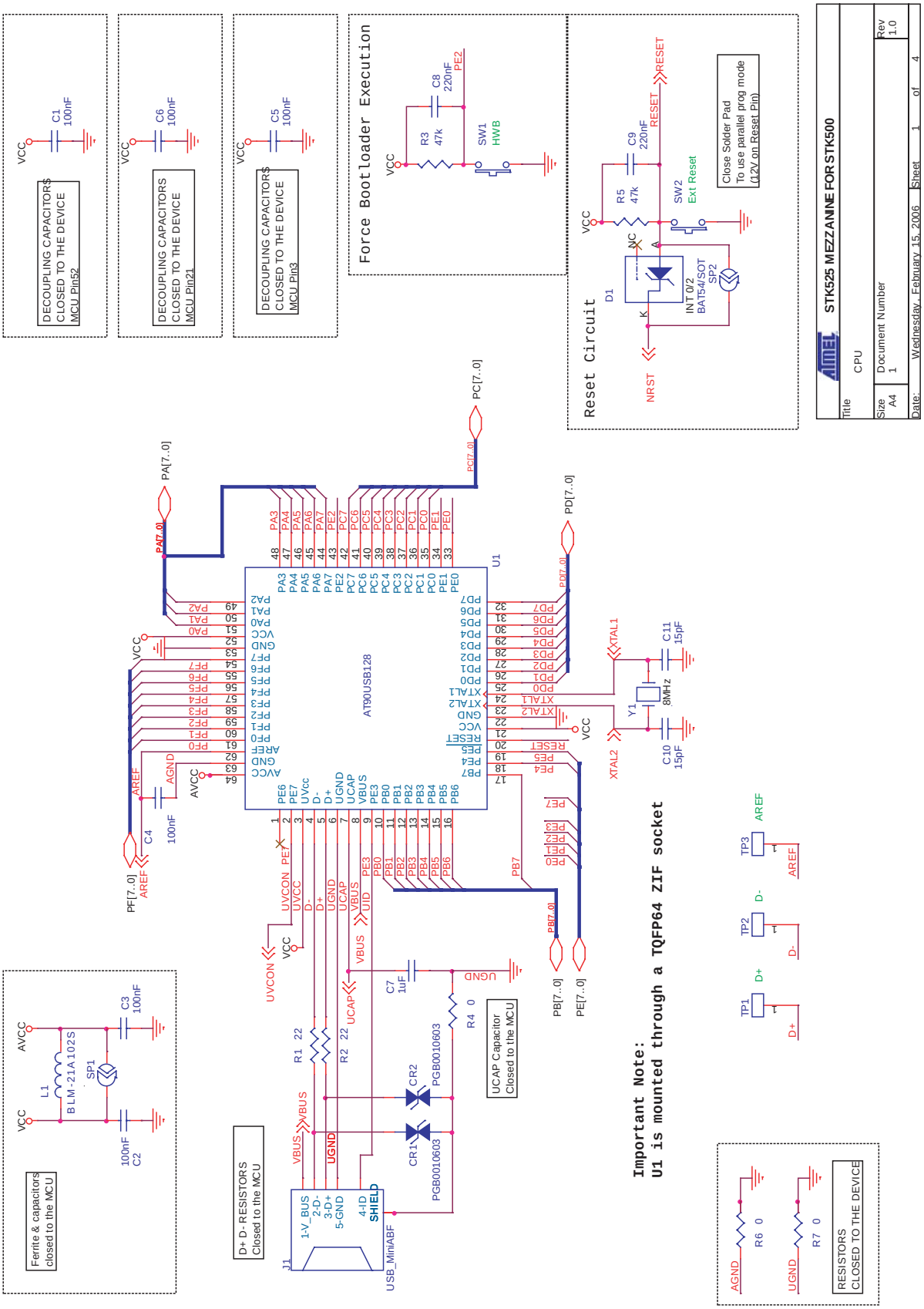

Figure 6-2 . Schematics, 2 of 5

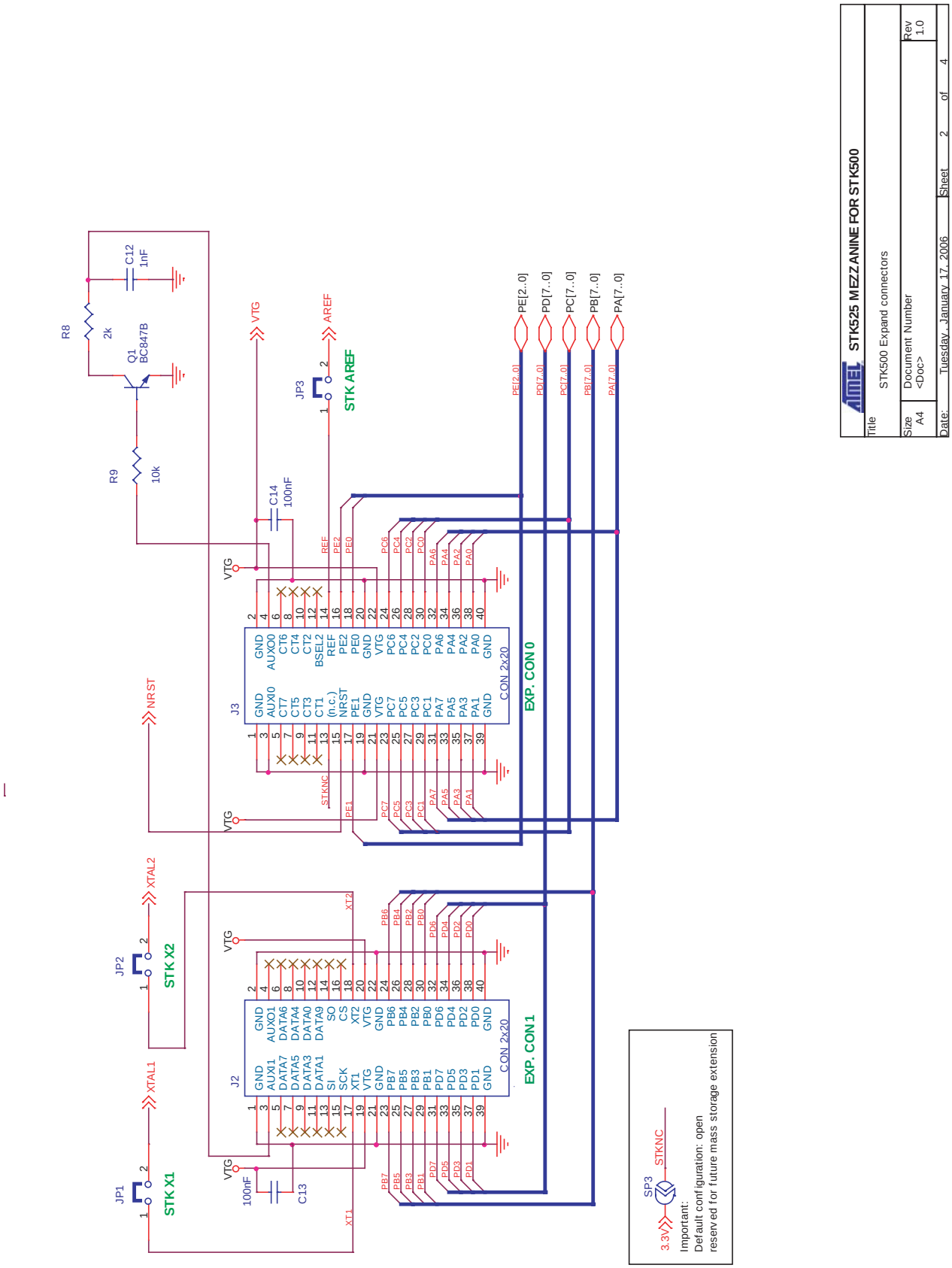

Figure 6-3 . Schematics, 3 of 5

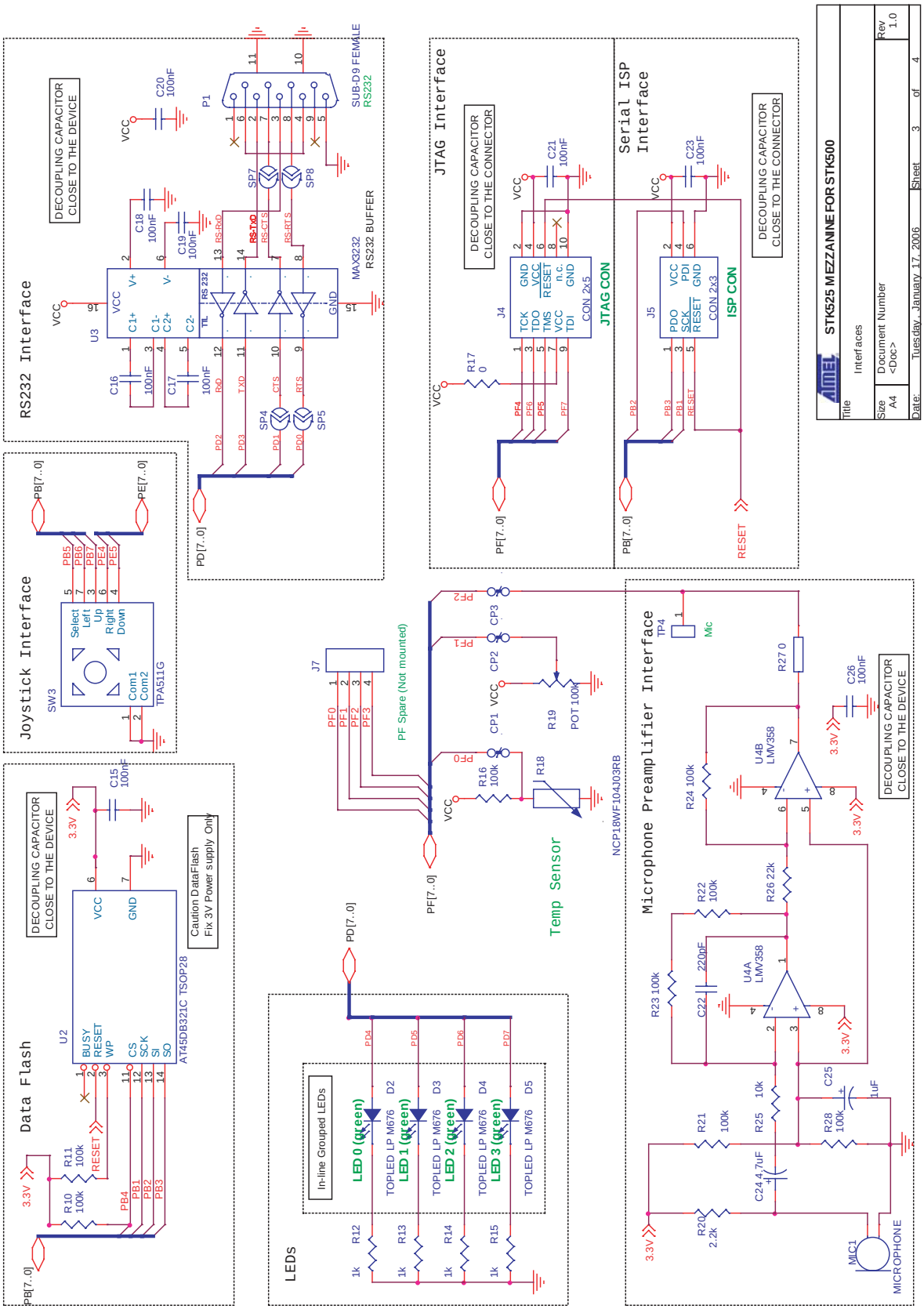

Figure 6-4 . Schematics, 4 of 5

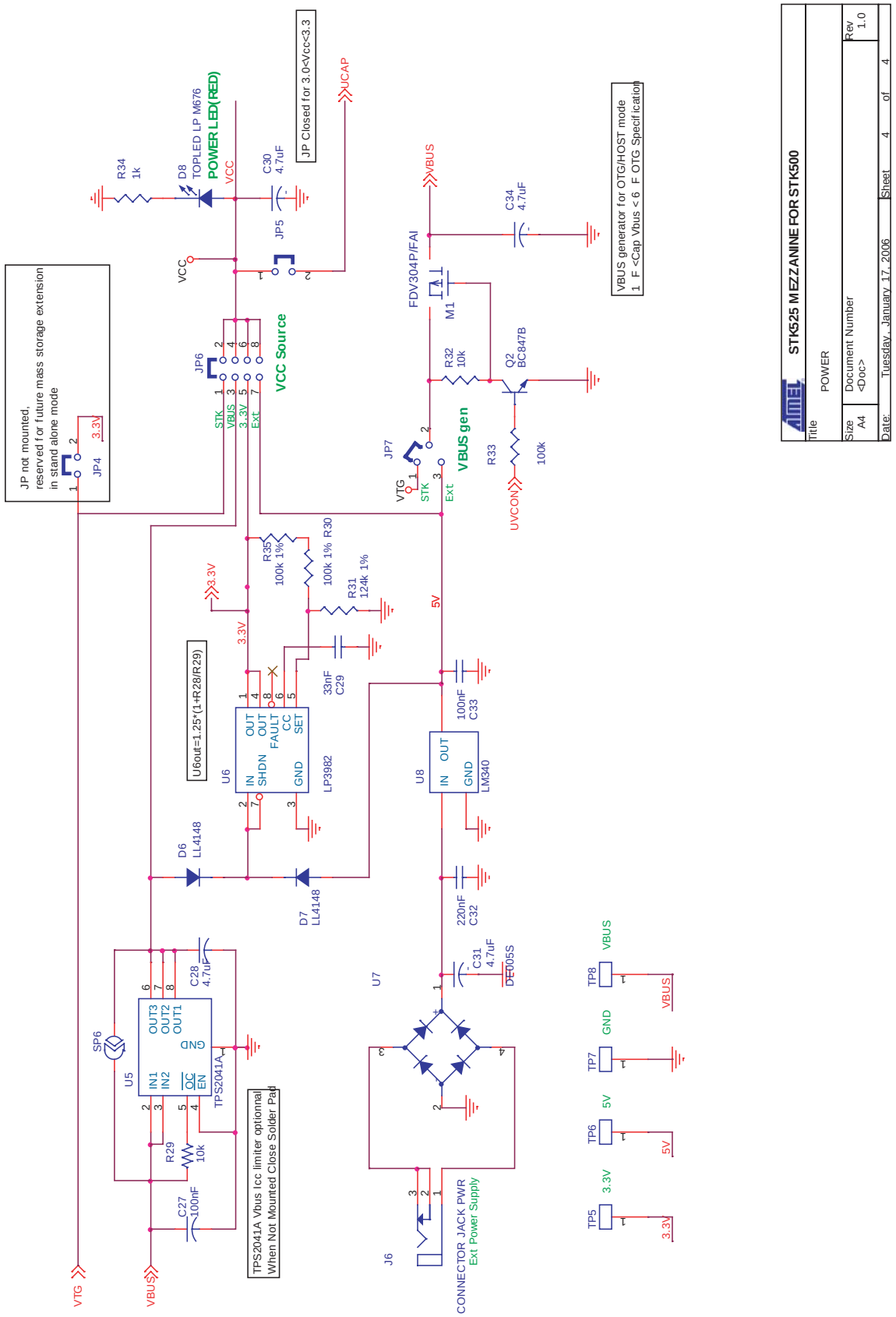

Figure 6-5 . Assembly Drawing, 1 of 2 (component side)

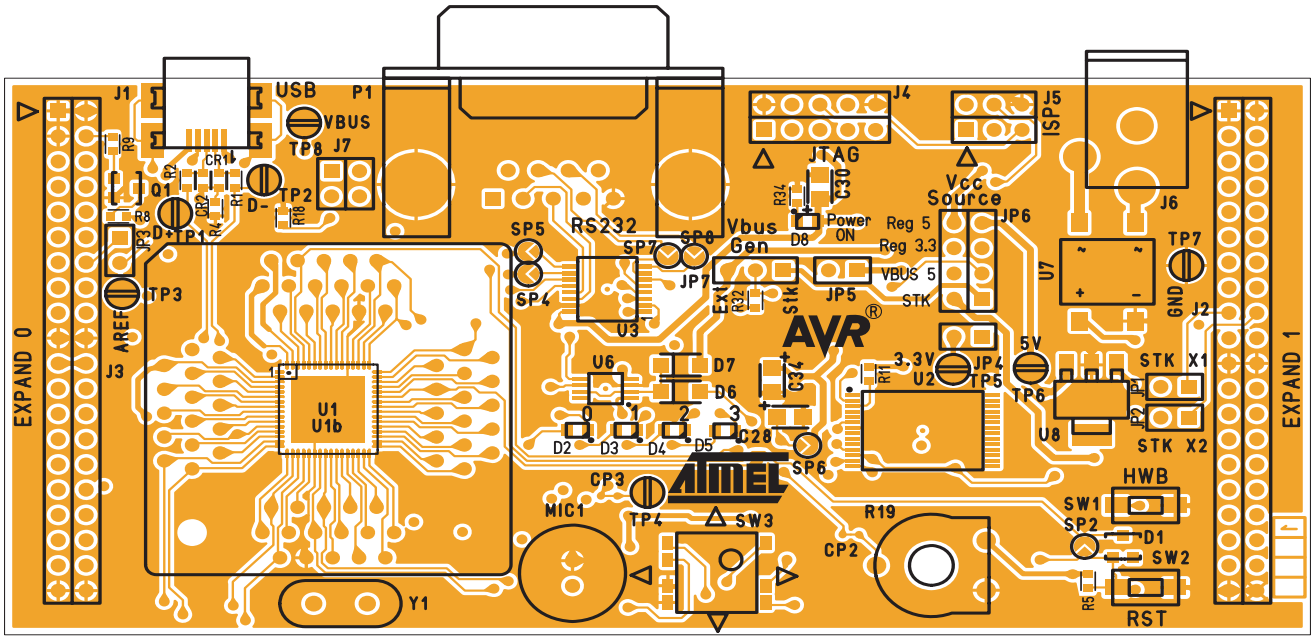

Figure 6-6 . Assembly Drawing, 2 of 2 (solder side)

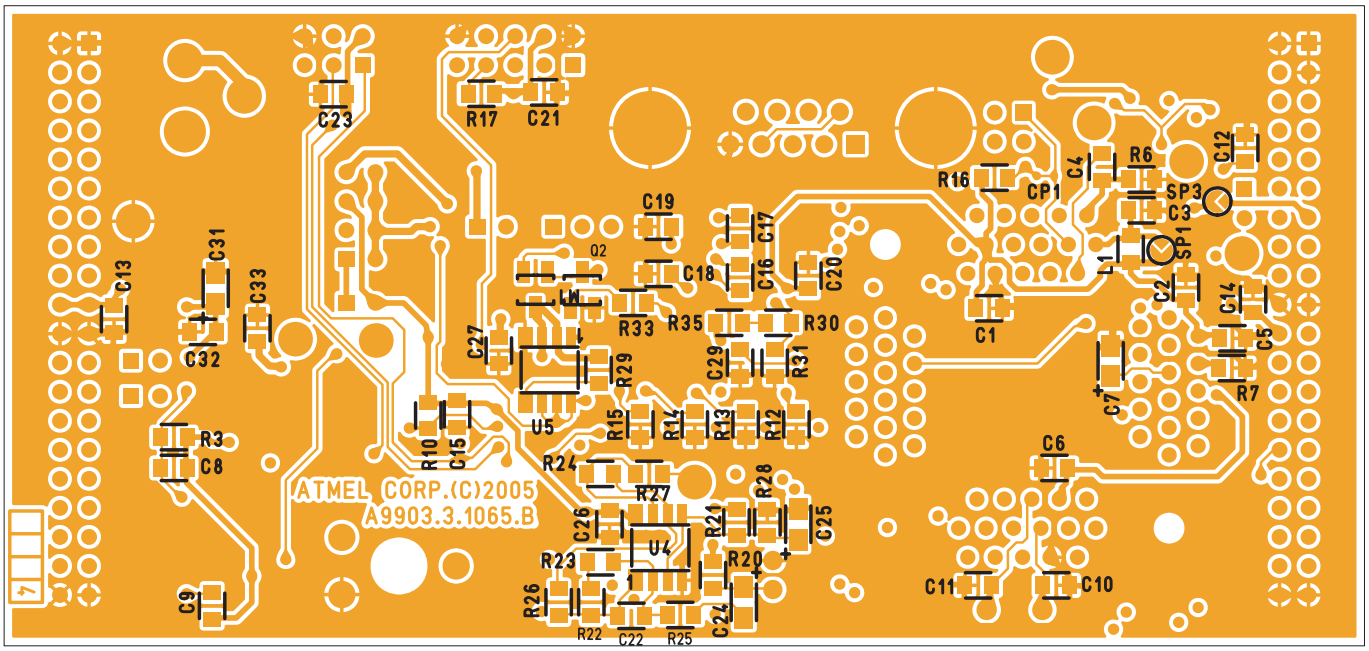

Table 6-1 . Bill of material

Item	Q.ty	Reference	Part	Tech. Characteristics	Package
1	2	CR1,CR2	PGB0010603	ESD protection	CASE 0805
2	19	C1,C2,C3,C4,C5,C6,C13,C14,C15,C16,C17,C18,C19,C20,C21,C23,C26,C27,C33	100nF	50V-10% Ceramic	CASE 0805
3	2	C7,C25	1uF	10Vmin ±10%	EIA/IECQ 3216
4	3	C8,C9,C32	220nF	50V-10% Ceramic	CASE 0805
5	2	C10,C11	15pF	50V-5% Ceramic	CASE 0805
6	1	C12	1nF	50V-5% Ceramic	CASE 0805
7	1	C22	220pF	50V-5% Ceramic	CASE 0805
8	5	C24,C28,C30,C31,C34	4.7uF	10Vmin ±10%	EIA/IECQ 3216
9	1	C29	33nF	50V-5% Ceramic	CASE 0805
10	3	CP1, CP2, CP3	Configuration Pad		
11	1	D1	BAT54/SOT	Vf=0.3V	SOT23
12	5	D2,D3,D4,D5,D8	TOPLED LP M676	Green I=10 mA_	PLCC-2
13	2	D6,D7	LL4148	i=200mA max	LL-34
14	5	JP1,JP2,JP3,JP4,JP5	JUMPER 1x2	Need 1 shunt	0,1" pitch
15	1	J1	USB_MiniABF	USB mini AB receptacle Surface mount	
16	2	J2,J3	CON 2x20		
17	1	J4	CON 2x5		
18	1	J5	CON 2x3		
19	1	J7	CON 2x2	Not Mounted	
20	1	JP6	JUMPER 2x4	Need 1 shunt	0,1" pitch
21	1	J6	CONNECTOR JACK PWR	Int.Diam=2.1mm	PCB Embase
22	1	JP7	JUMPER 3x1		
23	1	L1	BLM-21A102S	FERRITE BEAD 1 KOhms at 100 MHz	CASE 0805
24	1	MIC1	MICROPHONE	Electret Cap Mic	
25	1	M1	FDV304P/FAI	MOSFET P	SOT23
26	1	P1	SUB-D9 FEMALE	90° with harpoons	
27	2	Q1,Q2	BC847B	NPN IC peak=200mA	SOT23
28	2	R1,R2	22	1/16W-5% SMD	CASE 0602
29	2	R3,R5	47k	1/16W-5% SMD	CASE 0603
30	5	R4,R6,R7,R17,R27	0		CASE 0603
31	1	R8	2k		CASE 0604
32	4	R9,R25,R29,R32	10k	1/16W-5% SMD	CASE 0603

Item	Q.ty	Reference	Part	Tech. Characteristics	Package
33	9	R10,R11,R16,R21,R22,R23,R24,R28,R33	100k	1/16W-5% SMD	CASE 0603
34	5	R12,R13,R14,R15,R34	1k	1/16W-5% SMD	CASE 0603
35	1	R18	NCP18WF104J03RB	100K - ß=4250	CASE 0603
36	1	R19	POT 100k	PT10MH104ME	
37	1	R19 Button	Pot Button		
38	1	R20	2.2k	1/16W-5% SMD	CASE 0603
39	1	R26	22k	1/16W-5% SMD	CASE 0603
40	1	R30, R35	100k 1%	1/16W-1% SMD	CASE 0603
41	1	R31	120k 1%	1/16W-1% SMD	CASE 0603
42	6	SP1,SP2,SP3,SP4,SP5,SP6	SolderPad	(NA)	(NA)
43	2	SW1,SW2	PUSH-BUTTON	6x3.5mm - 1.6N	
44	1	SW3	TPA511G	4+1 ways joystick CMS	
45	8	TP1,TP2,TP3,TP4,TP5,TP6, TP7, TP8	TEST POINT		Diam.=1.32mm
46	1	U1	AT90USBxxx		TQFP64
47	1	U1 Socket	TQFP64 ZIF		
48	1	U2	AT45DB321C		TSOP28
49	1	U3	MAX3232ECAE+		SSOP16
50	1	U4	LMV358		SO8
51	1	U5	TPS2041A		SOIC8
52	1	U6	LP3982	Low Drop Out Vin Max 6V, 300mA	MSOP8
53	1	U7	DF005S	Bridge rectifier	See DS
54	1	U8	LM340	Reg 5V CMS	SOT223
55	1	Y1	8MHz CRYSTAL	H=4mm	HC49/4H

6.0.1 Default Configuration - Summary

Table 6-2 . Default Configuration summary

Name	Ref.	Function	State
Jumpers			
STKX1	JP1	XTAL Configuration	OFF
STKX2	JP2	XTAL Configuration	OFF
Aref	JP3	STK500 Analog Ref	OFF
VTG33	JP4	Short 3.3V to VTG (Mass storage extension board)	OFF
UCAP	JP5	Short UCAP with Uvcc	OFF
Vcc Src	JP6	Vcc Selection	3.4 shorted
Vbus Gen	JP7	VBUS generation selection (host mode)	2.3 shorted
Solder PADS			

Name	Ref.	Function	State
	SP1	Bypass L1	OPEN
	SP2		OPEN
	SP3	3.3V on Expand 0 NC pin	OPEN
	SP4	CTS	OPEN
	SP5	RTS	OPEN
	SP6	Bypass limiter	OPEN
	SP7	RS232 hardware control enable	OPEN
	SP8	RS232 hardware control enable	OPEN
Configuration PADS			
	CP1	Bypass CTN in on PF0	CLOSE
	CP2	Bypass Potentiometer ADC in on PF1	CLOSE
	CP3	Bypass Mic In on PF2	CLOSE

Atmel Corporation

2325 Orchard Parkway
San Jose, CA 95131, USA
Tel: 1(408) 441-0311
Fax: 1(408) 487-2600

Regional Headquarters

Europe
Atmel Sarl
Route des Arsenaux 41
Case Postale 80
CH-1705 Fribourg
Switzerland
Tel: (41) 26-426-5555
Fax: (41) 26-426-5500

Asia
Room 1219
Chinachem Golden Plaza
77 Mody Road Tsimshatsui
East Kowloon
Hong Kong
Tel: (852) 2721-9778
Fax: (852) 2722-1369

Japan
9F, Tonetsu Shinkawa Bldg.
1-24-8 Shinkawa
Chuo-ku, Tokyo 104-0033
Japan
Tel: (81) 3-3523-3551
Fax: (81) 3-3523-7581

Atmel Operations

Memory
2325 Orchard Parkway
San Jose, CA 95131, USA
Tel: 1(408) 441-0311
Fax: 1(408) 436-4314

Microcontrollers
2325 Orchard Parkway
San Jose, CA 95131, USA
Tel: 1(408) 441-0311
Fax: 1(408) 436-4314

La Chantrerie
BP 70602
44306 Nantes Cedex 3, France
Tel: (33) 2-40-18-18-18
Fax: (33) 2-40-18-19-60

ASIC/ASSP/Smart Cards
Zone Industrielle
13106 Rousset Cedex, France
Tel: (33) 4-42-53-60-00
Fax: (33) 4-42-53-60-01

1150 East Cheyenne Mtn. Blvd.
Colorado Springs, CO 80906, USA
Tel: 1(719) 576-3300
Fax: 1(719) 540-1759

Scottish Enterprise Technology Park
Maxwell Building
East Kilbride G75 0QR, Scotland
Tel: (44) 1355-803-000
Fax: (44) 1355-242-743

RF/Automotive
Theresienstrasse 2
Postfach 3535
74025 Heilbronn, Germany
Tel: (49) 71-31-67-0
Fax: (49) 71-31-67-2340

1150 East Cheyenne Mtn. Blvd.
Colorado Springs, CO 80906, USA
Tel: 1(719) 576-3300
Fax: 1(719) 540-1759

Biometrics/Imaging/Hi-Rel MPU/
High Speed Converters/RF Datacom
Avenue de Rochepleine
BP 123
38521 Saint-Egreve Cedex, France
Tel: (33) 4-76-58-30-00
Fax: (33) 4-76-58-34-80

Literature Requests
www.atmel.com/literature

Disclaimer: The information in this document is provided in connection with Atmel products. No license, express or implied, by estoppel or otherwise,to anyintellectualproperty right is granted by this document or in connection with the sale of Atmel products. **EXCEPT AS SET FORTH IN ATMEL'S TERMS AND CONDI-TIONS OF SALE LOCATED ON ATMEL'S WEB SITE, ATMEL ASSUMES NO LIABILITY WHATSOEVER AND DISCLAIMS ANY EXPRESS, IMPLIED OR STATUTORYWARRANTY RELATING TO ITS PRODUCTS INCLUDING, BUT NOT LIMITED TO, THE IMPLIED WARRANTY OF MERCHANTABILITY, FITNESS FOR A PARTICULARPURPOSE, OR NON-INFRINGEMENT. IN NO EVENT SHALL ATMEL BE LIABLE FOR ANY DIRECT, INDIRECT, CONSEQUENTIAL, PUNITIVE, SPECIAL OR INCIDEN-TAL DAMAGES (INCLUDING, WITHOUT LIMITATION, DAMAGES FOR LOSS OF PROFITS, BUSINESS INTERRUPTION, OR LOSS OF INFORMATION) ARISING OUTOF THE USE OR INABILITY TO USE THIS DOCUMENT, EVEN IF ATMEL HAS BEEN ADVISED OF THE POSSIBILITY OF SUCH DAMAGES.** Atmel makes norepresentationsor warranties with respect to the accuracy or completeness of the contents of this document and reserves the right to make changes to specificationsand product descriptions at any time without notice. Atmel does not make any commitment to update the information contained herein. Unless specifically provided otherwise, Atmel products are not suitable for, and shall not be used in, automotive applications. Atmel's products are not intended, authorized, or warranted for useas components in applications intended to support or sustainlife.

© Atmel Corporation 2006. **All rights reserved.** Atmel®, logo and combinations thereof, are registered trademarks, and Everywhere You Are® are the trademarks of Atmel Corporation or its subsidiaries. Other terms and product names may be trademarks of others.

Printed on recycled paper.

7608A–AVR–04/06 /xM