Ordering number : ENA2102A

STK433-130N-E

Thick-Film Hybrid IC

2ch class-AB Audio Power IC 150W+150W

ON Semiconductor®

http://onsemi.com

Overview

The STK433-130N-E is a hybrid IC designed to be used in 150W × 2ch class AB audio power amplifiers.

Application

- Audio Power amplifiers

Features

- Pin-to-pin compatible outputs ranging from 40W to 150W.
- Output load impedance: R_L = 6Ω recommended.
- Allows the use of predesigned applications for standby and mute circuit.
- Miniature package.
- Allowable load shorted time: 0.3 second

Series model

	STK433-040N-E	STK433-060N-E	STK433-130N-E
Output1 (10%/1kHz)	40W × 2ch	50W × 2ch	150W × 2ch
Output2 (0.4%/20Hz to 20kHz)	25W × 2ch	35W × 2ch	100W × 2ch
Max. rating V_{CC} (quiescent)	±38V	±46V	±71.5V
Max. rating V_{CC} (6Ω)	±36V	±40V	±63V
Recommended operating V_{CC} (6Ω)	±24V	±27V	±44V
Dimensions (excluding pin height)	47.0mm×25.6mm×9.0mm		67.0mm×25.6mm×9.0mm

	STK433-330N-E	STK433-840N-E	STK433-890N-E
Output1 (10%/1kHz)	150W × 3ch	40W × 4ch	80W × 4ch
Output2 (0.4%/20Hz to 20kHz)	100W × 3ch	25W × 4ch	50W × 4ch
Max. rating V_{CC} (quiescent)	±71.5V	±38V	±54V
Max. rating V_{CC} (6Ω)	±63V	±36V	±47V
Recommended operating V_{CC} (6Ω)	±44V	±25V	±34V
Dimensions (excluding pin height)	64.0mm×36.6mm×9.0mm	64.0mm×31.1mm×9.0mm	78.0mm×44.1mm×9.0mm

Specifications

Absolute Maximum Ratings at Ta = 25°C, Tc = 25°C unless otherwise specified

Parameter	Symbol	Conditions	Ratings	Unit
Maximum power supply voltage	V_{CC} max (0)	Non- signal	±71.5	V
	V_{CC} max (1)	Signal, $R_L \geq 6\Omega$	±63	V
Minimum operation supply voltage	V_{CC} min		±10	V
#13 Operating voltage *5	VST OFF max		-0.3 to +5.5	V
Thermal resistance	θj-c	Per one power transistor	1.6	°C/W
Junction temperature	Tj max	Should satisfy Tj max and Tc max	150	°C
Operating substrate temperature	Tc max		125	°C
Storage temperature	Tstg		-30 to +125	°C
Allowable time for load short-circuit *4	ts	V_{CC} = ±44V, R_L = 6Ω, f = 50Hz P_O = 100W, 1ch drive	0.3	s

Stresses exceeding Maximum Ratings may damage the device. Maximum Ratings are stress ratings only. Functional operation above the Recommended Operating Conditions is not implied. Extended exposure to stresses above the Recommended Operating Conditions may affect device reliability.

ORDERING INFORMATION

See detailed ordering and shipping information on page 11 of this data sheet.

Semiconductor Components Industries, LLC, 2013
April, 2013

41713HK/80112HKPC 018-11-0062 No.A2102-1/11

Operating Characteristics at Tc = 25°C, R_L = 6Ω (Non-inductive Load), Rg = 600Ω, VG = 30dB

Parameter	Symbol	Conditions *2					Ratings			Unit
		V_{CC} [V]	f [Hz]	P_O [W]	THD [%]		min	typ	max	
Output power *1	P_O 1	±44	20 to 20k		0.4		96	100		W
	P_O 2	±44	1k		10			150		
Total harmonic distortion *1	THD 1	±44	20 to 20k	5.0		VG=30dB			0.4	%
	THD 2	±44	1k					0.01		
Frequency characteristics *1	f_L, f_H	±44		1.0		+0 -3dB	20 to 50k			Hz
Input impedance	ri	±44	1k	1.0				55		kΩ
Output noise voltage *3	V_{NO}	±53				Rg=2.2kΩ			1.0	mVrms
Quiescent current	I_{CCO}	±53				No load	40	80	100	mA
Output neutral voltage	V_N	±53					-70	0	+70	mV
#13 Stand-by ON threshold *5	VST ON	±44				Stand-by		0	0.6	V
#13 Stand-by OFF threshold *5	VST OFF	±44				Operation	2.5	3.0	5.5	V

Note

*1. 1channel operation.

*2. All tests are measured using a constant-voltage supply unless otherwise specified

*3. The output noise voltage is peak value of an average-reading meter with a rms value scale (VTVM).
A regulated AC supply (50Hz) should be used to eliminate the effects of AC primary line flicker noise

*4. Allowable time for load short-circuit and output noise voltage are measured using the specified transformer power supply.

*5. The impression voltage of '#13 (Stand-By) pin' must not exceed the maximum rating.
Power amplifier operate by impressing voltage +2.5 to +5.5v to '#13 (Stand-By) pin'.

* Please connect - PreVcc pin (#1 pin)with the stable minimum voltage.
and connect so that current does not flow in by reverse bias.

* In case of heat sink design, we request customer to design in the condition to have assumed market.

* The case of this Hybrid-IC is using thermosetting silicon adhesive (TSE322SX).

* Weight of HIC : (typ) 18.4g
Outer carton dimensions (W×L×H) : 429mm×245mm×275mm

Specified transformer power supply
(Equivalent to MG-250)

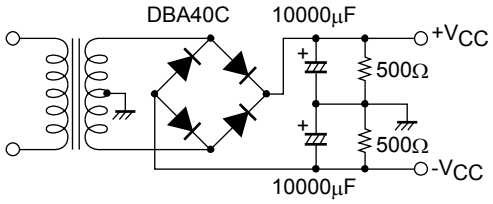

Package Dimensions

unit : mm (typ)

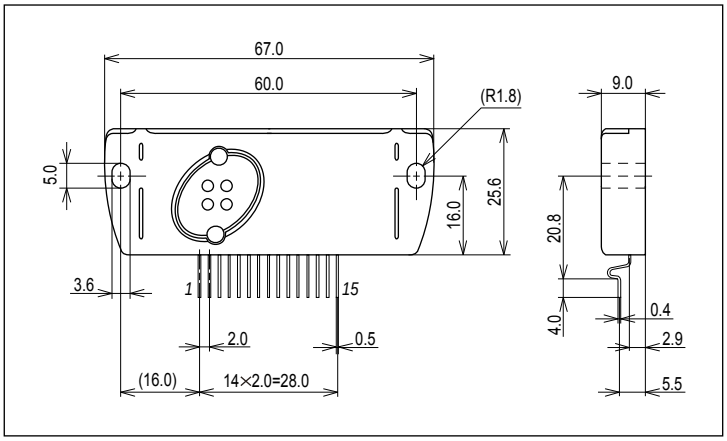

RoHS directive pass

Equivalent Circuit

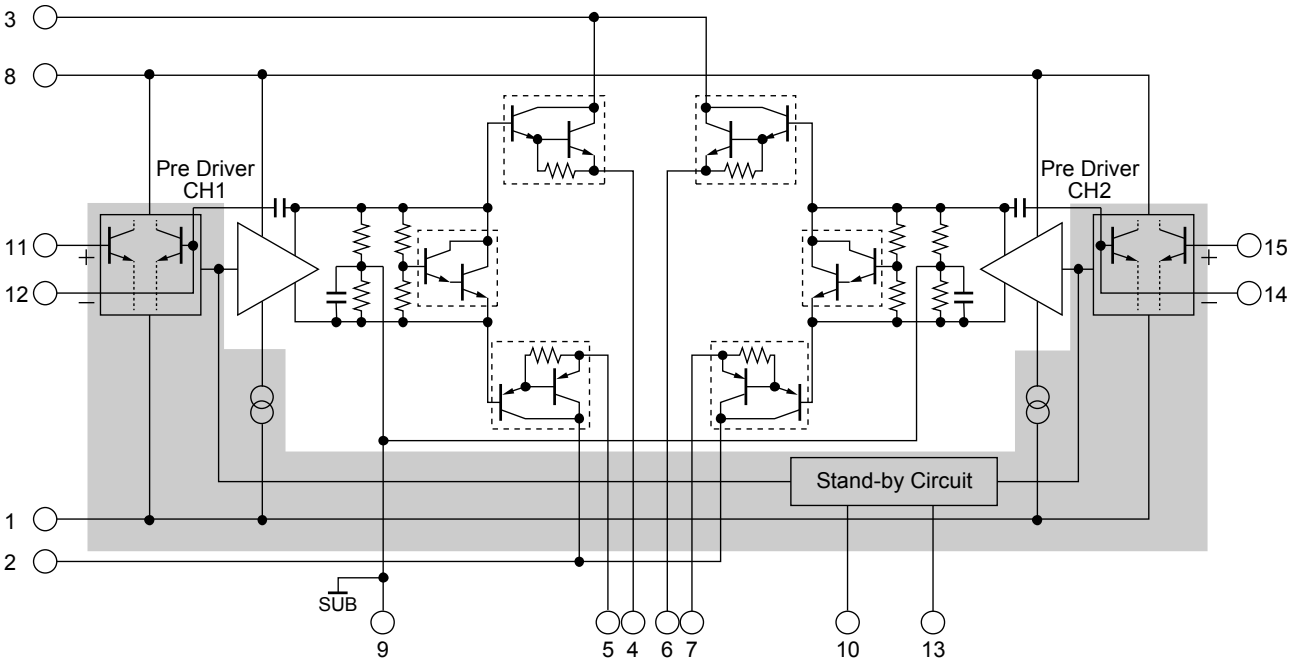

Application Circuit

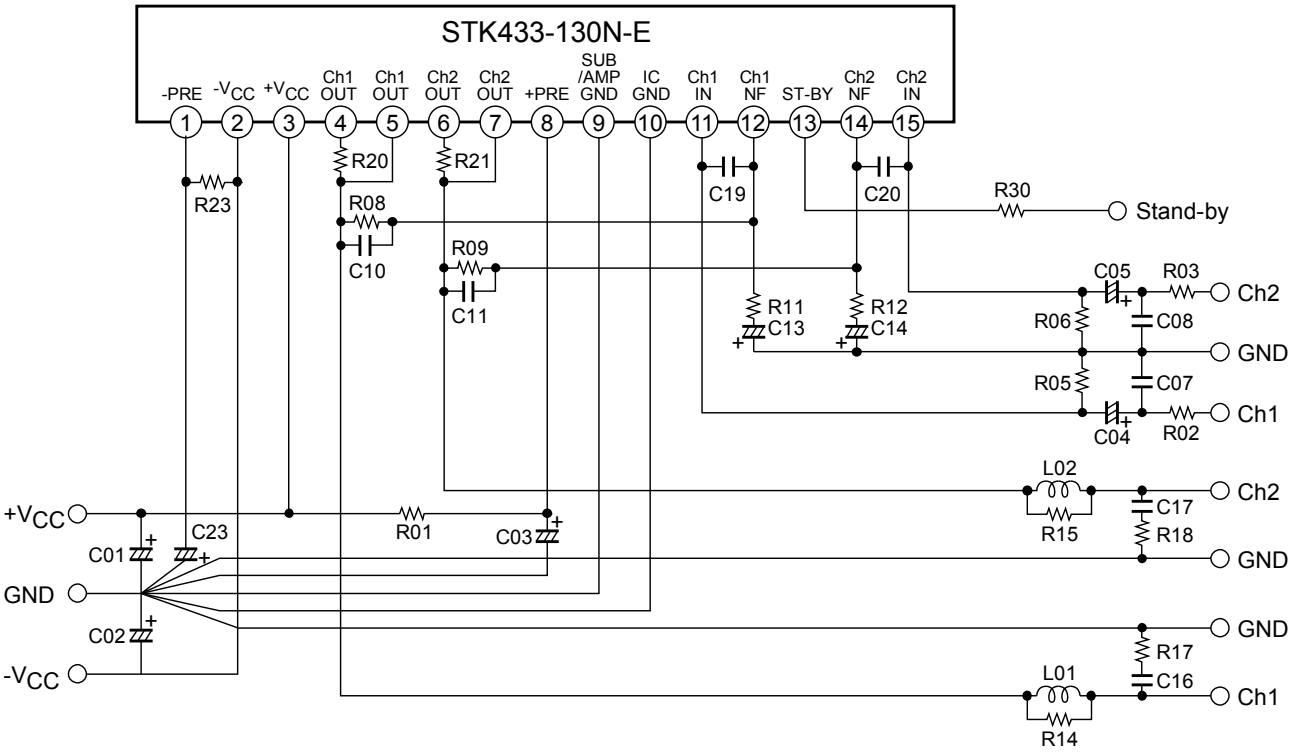

PCB Layout Example

Top view

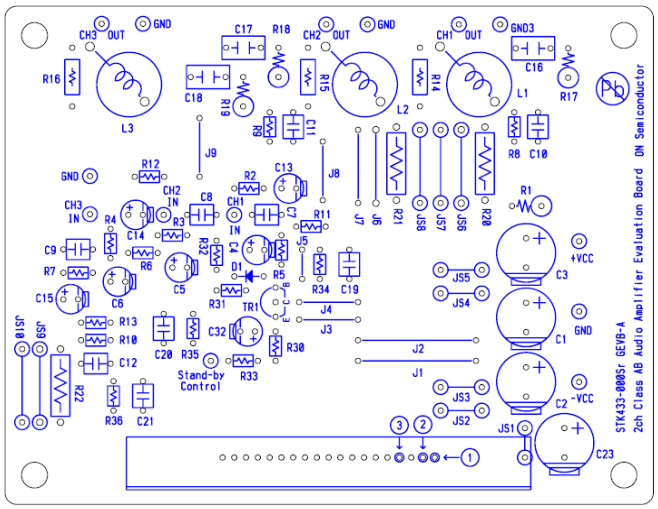

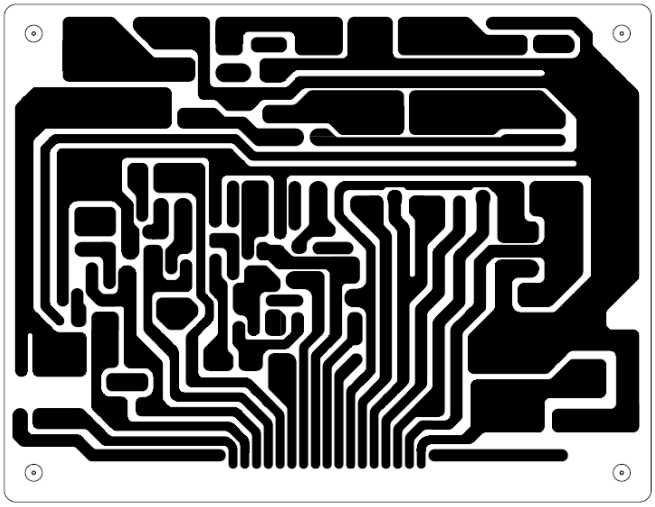

STK433-040N-E/060N-E/130N-E/330N-E PCB PARTS LIST

PCB Name : STK433 - 000Sr GEVB - A

Location No. (*2) 2ch Amp doesn't mount parts of ( ) .		RATING	Component		
Hybrid IC#1 Pin Position		-	STK433-		
			040N-E	060N-E	130N-E/ 330N-E
R01		100Ω, 1W	○		
R02, R03, (R04)		1kΩ, 1/6W	○		
R05, R06, (R07), R08, R09, (R10)		56KΩ, 1/6W	○		
R11, R12, (R13)		1.8KΩ, 1/6W	○		
R14, R15, (R16)		4.7Ω, 1/4W	○		
R17, R18, (R19)		4.7Ω, 1W	○		
R20, R21, (R22)		0.22Ω, 2W	○	○	-
		0.22Ω, 5W	-	-	○
C01, C02, C03, C23		100μF, 100V	○		
C04, C05, (C06)		2.2μF, 50V	○		
C07, C08, (C09)		470pF, 50V	○		
C10, C11, (C12)		3pF, 50V	○		
C13, C14, (C15)		10μF, 16V	○		
C16, C17, (C18)		0.1μF, 50V	○		
C19, C20, (C21)		***pF, 50V	100pF	56pF	N.C.
R34, R35, (R36)		Jumper	Short		
L01, L02, (L03)		3μH	○		
Stand-By Control Circuit	Tr1	VCE ≥ 75V, IC ≥ 1mA	○		
	D1	Di	○		
	R30 (*2)	2.7kΩ, 1/6W	○ (*2)		
	R31	33kΩ, 1/6W	○		
	R32	1kΩ, 1/6W	○		
	R33	2kΩ, 1/6W	○		
	C32	33μF, 10V	○		
J1, J2, J3, J4, J5, J6, J8, J9		Jumper	○		
J7, JS2, JS3, JS4, JS5, JS7 JS8, JS9		-	-		
JS6, JS10		Jumper	○		
JS1 (R23)		100Ω, 1W	○		

(*1) STK433-040N-E/060N-E/130N-E (2ch Amp) doesn't mount parts of ( )

(*2) Recommended standby circuit is used.

Recommended external components

STK433-040N-E/060N-E/130N-E/330N-E

Parts Location	Recommended value	Circuit purpose	Above Recommended value	Below Recommended value
R01, R23	100Ω/1W	Resistance for Ripple filter. (Fuse resistance is recommended. Ripple filter is constituted with C03, C23.)	Short-through current may decrease at high frequency.	Short-through current may increase at high frequency.
R02, R03, R04	1kΩ	Resistance for input filters.	-	-
R05, R06, R07	56kΩ	Input impedance is determined.	Output neutral voltage(VN) shift. (It is referred that R05=R08, R06=R09)	
R08, R09, R10	56kΩ	Voltage Gain (VG) is determined with R11, R12, R13	-	-
R11, R12, R13	1.8kΩ	Voltage Gain (VG) is determined with R8, R9, R10 (As for VG, it is desirable to set up by R11, R12, R13)	It may oscillate. (Vg < 30dB)	With especially no problem
R14, R15, R16	4.7Ω	Resistance for oscillation prevention.	-	-
R17, R18, R19	4.7Ω/1W	Resistance for oscillation prevention.	-	-
R20, R21, R22	0.22Ω/2W (040N-E,060N-E) 0.22Ω/5W (130N-E,330N-E)	This resistance is used as detection resistance of the protection circuit application.	Decrease of Maximum output Power	It may cause thermal runaway
R30	Note *5	Select Restriction resistance, for the impression voltage of '#17 (Stand-By) pin' must not exceed the maximum rating.		
C01, C02	100μF/50V	Capacitor for oscillation prevention. • Locate near the HIC as much as possible. • Power supply impedance is lowered and stable operation of the IC is carried out. (Electrolytic capacitor is recommended.)	-	-
C03, C23	100μF/50V	Decoupling capacitor • The Ripple ingredient mixed in an input side Is removed from a power supply line. (Ripple filter is constituted with R01, R23.)	The change in the Ripple ingredient mixed in an input side from a power supply line	
C04, C05, C06	2.2μF/50V	Input coupling capacitor.(for DC current prevention.)	-	
C07, C08, C09	470pF	Input filter capacitor • A high frequency noise is reduced with the filter constituted by R02, R03, R04	-	
C10, C11, C12	3pF	Capacitor for oscillation prevention.	It may oscillate.	
C13, C14, C15	10μF/10V	Negative feedback capacitor. The cutoff frequency of a low cycle changes. ($fL = 1/(2\pi \cdot C13 \cdot R11)$)	The voltage gain (VG) of low frequency is extended. However, the pop noise at the time of a power supply injection also becomes large.	The voltage gain (VG) of low frequency decreases.
C16, C17, C18	0.1μF	Capacitor for oscillation prevention.	It may oscillate.	
C19, C20, C21	100pF (040N-E) 56pF (060N-E) N.C. (130N-E, 330N-E)	Capacitor for oscillation prevention.	It may oscillate.	
L01, L02, L03	3μH	Coil for oscillation prevention.	With especially no problem	It may oscillate.

Pin Layout

[STK433-000N/-100N/-300Nsr Pin Layout]

	1	2	3	4	5	6	7	8	9	10	11	12	13	14	15
(Size) 47.0mm×25.6mm×9.0mm	2ch classAB/2.00mm														
STK433-040N 40W/JEITA	-PRE	-VCC	+VCC	OUT/CH1+	OUT/CH1-	OUT/CH2+	OUT/CH2-	+PRE	SUB	GND	IN/CH1	NF/CH1	STAND|BY	NF/CH2	IN/CH2
STK433-060N 50W/JEITA															
(Size) 67.0mm×25.6mm×9.0mm															
STK433-130N 150W/JEITA															

	1	2	3	4	5	6	7	8	9	10	11	12	13	14	15	16	17	18	19
(Size) 64.0mm×36.6mm×9.0mm	3ch classAB/2.00mm																		
STK433-330N 150W/JEITA	-PRE	-VCC	+VCC	OUT/CH1+	OUT/CH1-	OUT/CH2+	OUT/CH2-	+PRE	SUB	GND	IN/CH1	NF/CH1	STAND|BY	NF/CH2	IN/CH2	IN/CH3	NF/CH3	OUT/CH3+	OUT/CH3-

[STK433-000N/-100N/-800Nsr Pin Layout]

	1	2	3	4	5	6	7	8	9	10	11	12	13	14	15
(Size) 47.0mm×25.6mm×9.0mm	2ch classAB/2.00mm														
STK433-040N 40W/JEITA	-PRE	-VCC	+VCC	OUT/CH1+	OUT/CH1-	OUT/CH2+	OUT/CH2-	+PRE	SUB	GND	IN/CH1	NF/CH1	STAND|BY	NF/CH2	IN/CH2
STK433-060N 50W/JEITA															
(Size) 67.0mm×25.6mm×9.0mm															
STK433-130N 150W/JEITA															

	1	2	3	4	5	6	7	8	9	10	11	12	13	14	15	16	17	18	19	20	21	22	23
(Size) 64.0mm×31.1mm×9.0mm	4ch classAB/2.00mm																						
STK433-840N 40W/JEITA	-PRE	-VCC	+VCC	OUT/CH1+	OUT/CH1-	OUT/CH2+	OUT/CH2-	+PRE	SUB	GND	IN/CH1	NF/CH1	STAND|BY	NF/CH2	IN/CH2	NF/CH3	IN/CH3	IN/CH4	NF/CH4	OUT/CH3-	OUT/CH3+	OUT/CH4-	OUT/CH4+
(Size) 78.0mm×44.1mm×9.0mm																							
STK433-890N 80W/JEITA																							

Characteristic of Evaluation Board

THD-Po
STK433-130N-E

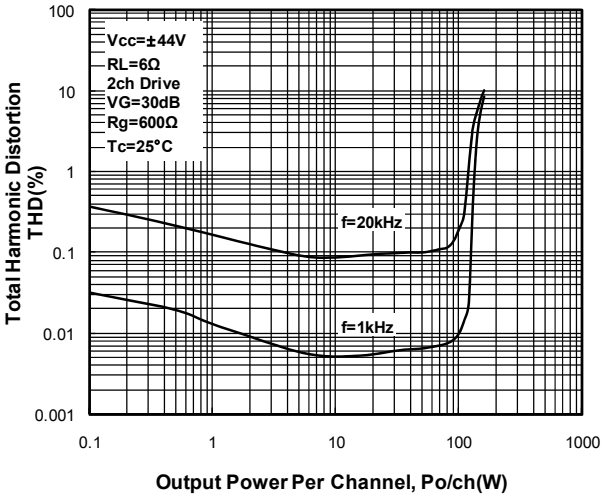

Pd-Po
STK433-130N-E

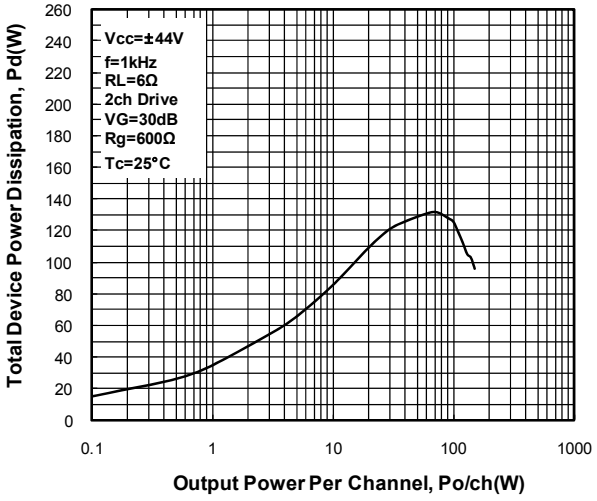

Po-Vcc
STK433-130N-E

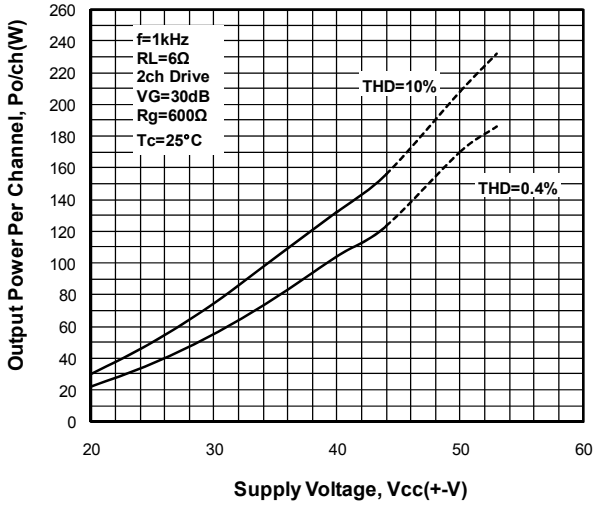

Po-f
STK433-130N-E

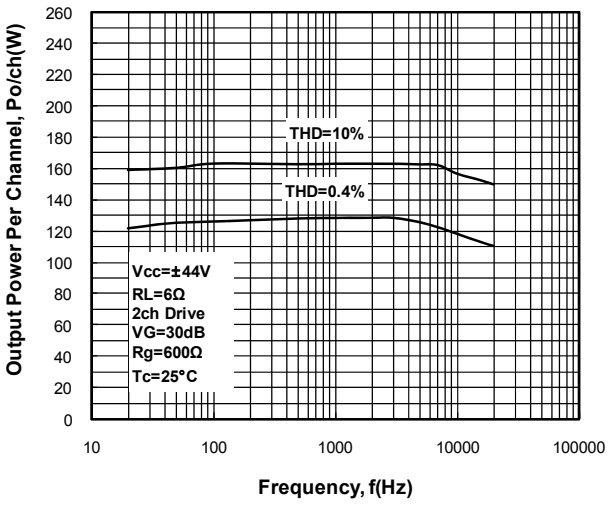

A Thermal Design Tip For STK433-130N-E Amplifier

[Thermal Design Conditions]

The thermal resistance (θc-a) of the heat-sink which manages the heat dissipation inside the Hybrid IC will be determined as follow:

(Condition 1) The case temperature (Tc) of the Hybrid IC should not exceed 125°C

$$Pd \times \theta c\text{-}a + Ta < 125°C \cdots\cdots (1)$$

Where Ta : the ambient temperature for the system

(Condition 2) The junction temperature of each power transistor should not exceed 150°C

$$Pd \times \theta c\text{-}a + Pd/N \times \theta j\text{-}c + Ta < 150°C \cdots\cdots (2)$$

Where N : the number of transistors (two for 1 channel , ten for channel)

θj-c : the thermal resistance of each transistor (see specification)

Note that the power consumption of each power transistor is assumed to be equal to the total power dissipation (Pd) divided by the number of transistors (N).

From the formula (1) and (2), we will obtain:

$$\theta c\text{-}a < (125 - Ta)/Pd \cdots\cdots (1)'$$

$$\theta c\text{-}a < (150 - Ta)/Pd - \theta j\text{-}c/N \cdots\cdots (2)'$$

The value which satisfies above formula (1)' and (2)' will be the thermal resistance for a desired heat-sink.

Note that all of the component except power transistors employed in the Hybrid IC comply with above conditions.

[Example of Thermal Design]

Generally, the power consumption of actual music signals are being estimated by the continuous signal of 1/8 P_O max. (Note that the value of 1/8 P_O max may be varied from the country to country.)

(Sample of STK433-130N-E ; 100W×2ch)

If V_{CC} is ±44V, and R_L is 6Ω, then the total power dissipation (Pd) of inside Hybrid IC is as follow;

$Pd = 91W$ (at 12.5W output power,1/8 of P_O max)

There are four (4) transistors in Audio Section of this Hybrid IC, and thermal resistance (θj-c) of each transistor is 1.6°C/W. If the ambient temperature (Ta) is guaranteed for 50°C, then the thermal resistance (θc-a) of a desired heat-sink should be;

From (1)' $\theta c\text{-}a < (125 - 50)/91$

< 0.82

From (2)' $\theta c\text{-}a < (150 - 50)/91 - 1.6/4$

< 0.70

Therefore, in order to satisfy both (1)' and (2)', the thermal resistance of a desired Heat-sink will be 0.70°C/W.

[Note]

Above are reference only. The samples are operated with a constant power supply. Please verify the conditions when your system is actually implemented.

STK433-000N-E/100N-E series Stand-by Control & Mute Control & Load-Short Protection Application

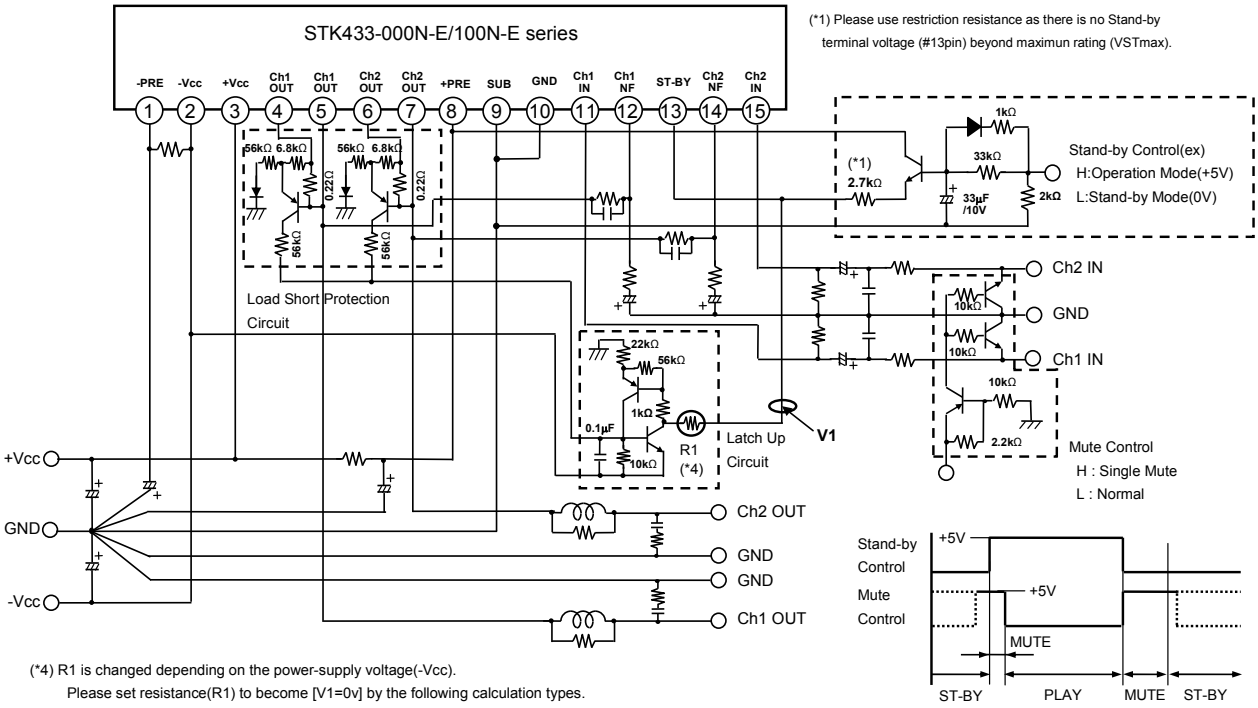

(*4) R1 is changed depending on the power-supply voltage(-Vcc).
Please set resistance(R1) to become [V1=0v] by the following calculation types.

[STK433-000N-E/100N-E series Stand-By Control Example]

[Feature]

- The pop noise which occurs to the time of power supply on/off can be improved substantially by recommendation Stand-By Control Application.
- Stand-By Control can be done by additionally adjusting the limitation resistance to the voltage such as micom, the set design is easy.

(Reference circuit) STK433-000N-E/100N-E series test circuit To Stand-By Control added +5V.

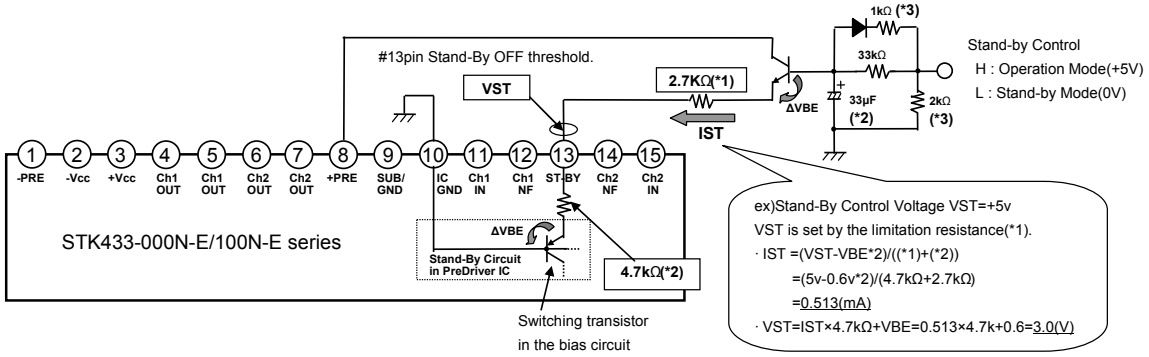

[Operation explanation] #13pin Stand-By Control Voltage VST

(1) Operation Mode

The switching transistor in the bias circuit turns on and places the amplifier into the operating mode, when 13pin (VST) voltage added above 2.5V (typ 3.0V).

(2) Stand-By Mode

When 13pin (VST) voltage is stopped (= 0V), the switching transistor in the bias circuit turn off, placing the amplifier into the standby mode.

(*1) The current limiting resistor must be used to ensure that stand-by pin (13pin) voltage does not exceed its maximum rated value VST max.

(*2) The pop noise level when the power is turned on can be reduced by setting the time constant with a capacitor in operating mode.

(*3) Determines the time constant at which the capacitor (*2) is discharged in stand-by mode.

ORDERING INFORMATION

Device	Package	Shipping (Qty / Packing)
STK433-130N-E	SIP15 (Pb-Free)	20 / Bulk Box

ON Semiconductor and the ON logo are registered trademarks of Semiconductor Components Industries, LLC (SCILLC). SCILLC owns the rights to a number of patents, trademarks, copyrights, trade secrets, and other intellectual property. A listing of SCILLC's product/patent coverage may be accessed at www.onsemi.com/site/pdf/Patent-Marking.pdf. SCILLC reserves the right to make changes without further notice to any products herein. SCILLC makes no warranty, representation or guarantee regarding the suitability of its products for any particular purpose, nor does SCILLC assume any liability arising out of the application or use of any product or circuit, and specifically disclaims any and all liability, including without limitation special, consequential or incidental damages. "Typical" parameters which may be provided in SCILLC data sheets and/or specifications can and do vary in different applications and actual performance may vary over time. All operating parameters, including "Typicals" must be validated for each customer application by customer's technical experts. SCILLC does not convey any license under its patent rights nor the rights of others. SCILLC products are not designed, intended, or authorized for use as components in systems intended for surgical implant into the body, or other applications intended to support or sustain life, or for any other application in which the failure of the SCILLC product could create a situation where personal injury or death may occur. Should Buyer purchase or use SCILLC products for any such unintended or unauthorized application, Buyer shall indemnify and hold SCILLC and its officers, employees, subsidiaries, affiliates, and distributors harmless against all claims, costs, damages, and expenses, and reasonable attorney fees arising out of, directly or indirectly, any claim of personal injury or death associated with such unintended or unauthorized use, even if such claim alleges that SCILLC was negligent regarding the design or manufacture of the part. SCILLC is an Equal Opportunity/Affirmative Action Employer. This literature is subject to all applicable copyright laws and is not for resale in any manner.