Test Procedure for the STK404-070NGEVB Evaluation Board

[Supply Voltage]

+Vcc/-Vcc : Power Supply for audio power amplifiers

+PRE (+12V) : Power Supply for +PRE

[Operation Guide]

1. Installation of the heat sink
   Please refer to a thermal design tip for the amplifier.
2. Load Connection:
   Connect the RL=6Ω (Non-inductive load)
3. Power Supply Connection:
   Connect the +Vcc/-Vcc/+12V (Iutput off : 0V)
5. Input Connection:
   Connect the Oscillator (Sine wave / Output resistance 600Ω)
   The gain of the evaluation board is set in 30dB.
6. Power Supply:
   At first, supply DC voltage to +12V.
   Next, supply DC voltage to +Vcc and -Vcc.
7. Input: ON

[Required Equipment]

Equipment	Efficiency		
Evaluation Board	STK404-070NGEVB	STK404-120NGEVB	STK404-140NGEVB
Power supply +Vcc	60V-3A	80V-5A	100V-6A
Power supply -Vcc	60V-3A	80V-5A	100V-6A
Power supply Stand-By Control	15V-1A		
Load	6Ω(Non-inductive load)		
Measurement	Audio analyzer (Panasonic VP-7723B)		

Characteristics confirmation

STK404-070NGEVB

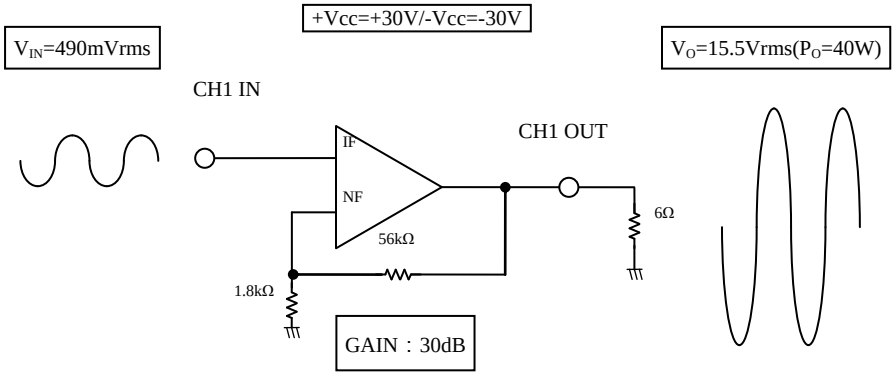

STK404-120NGEVB

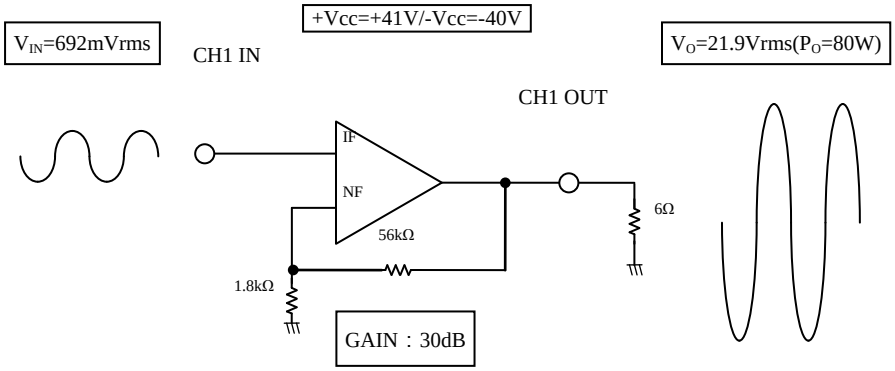

STK404-140NGEVB

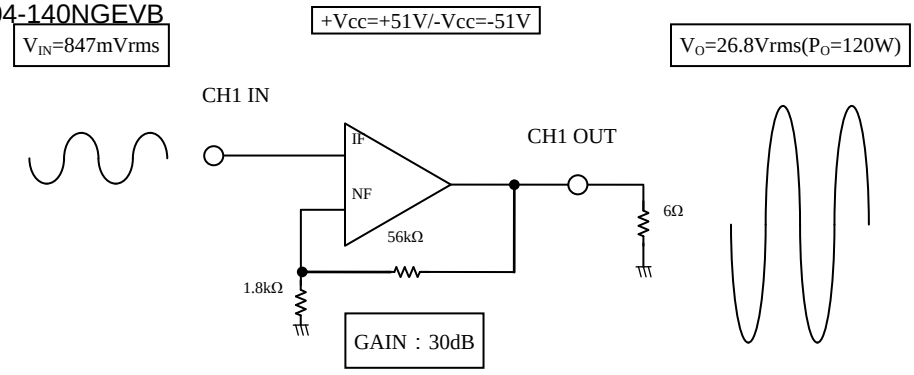

Characteristics confirmation

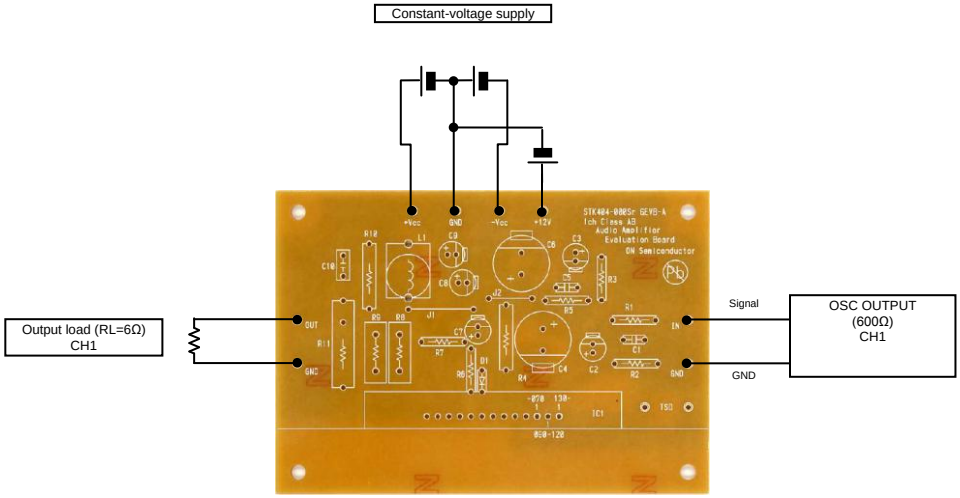

Sound quality confirmation, load short-circuit test, noise examination

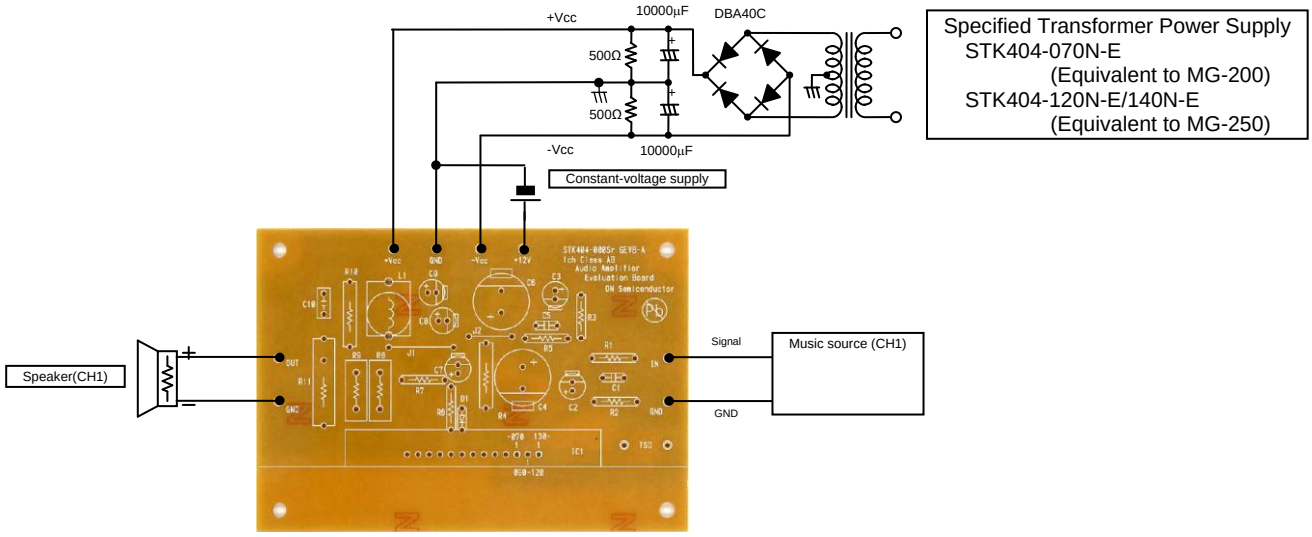

Test Circuit

STK404-070N-E

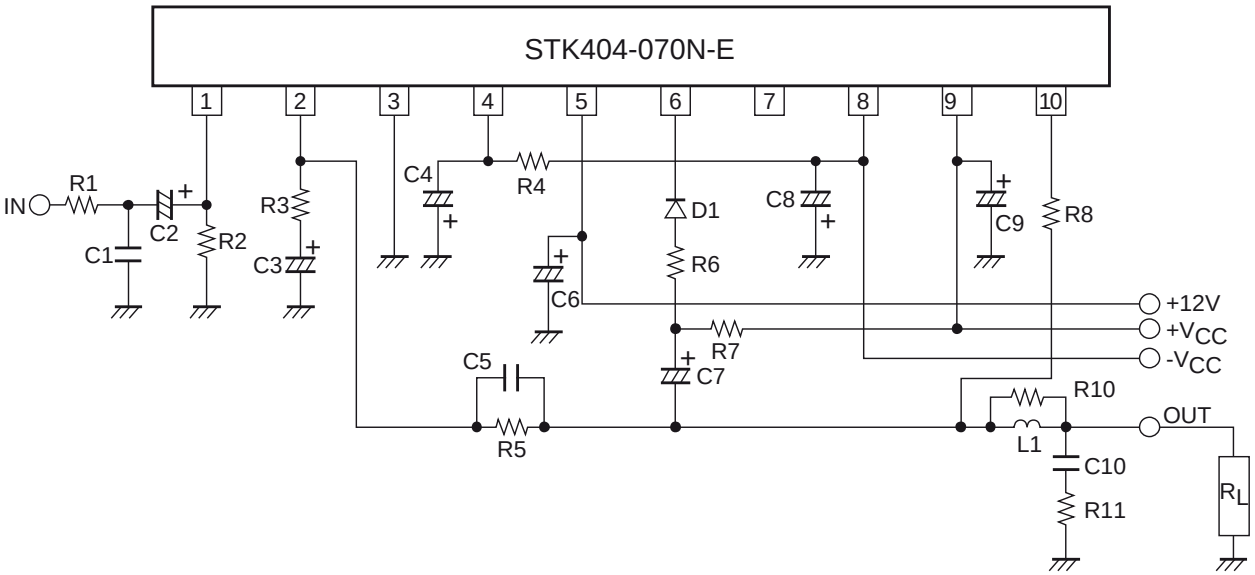

Test Circuit

STK404-120N-E

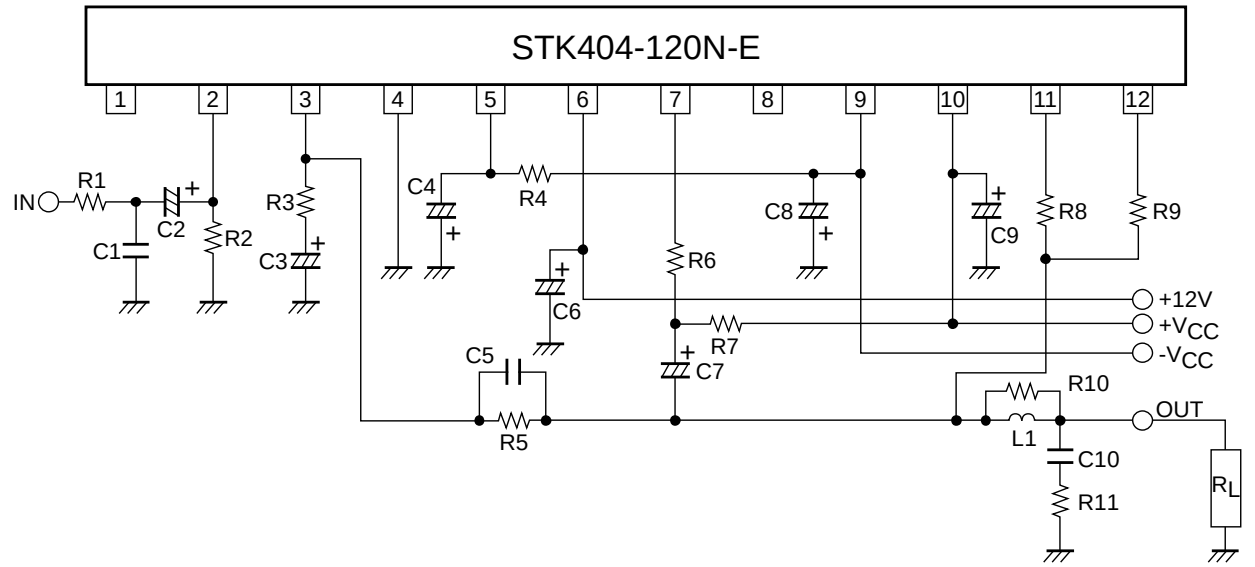

Test Circuit

STK404-140N-E

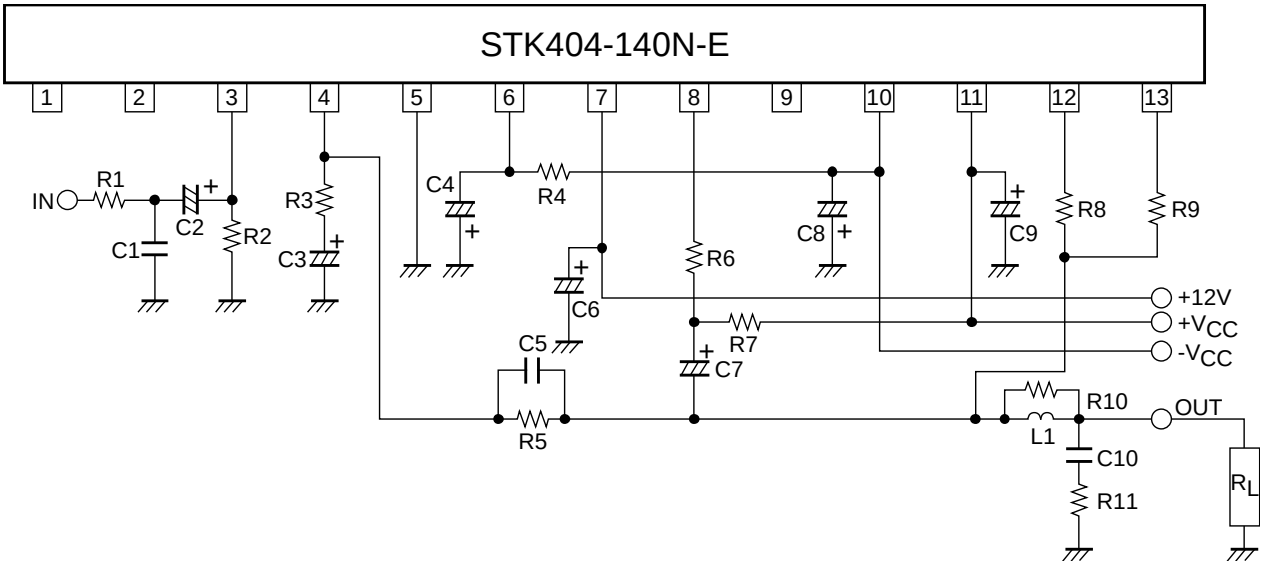

Characteristic of Evaluation Board

STK404-070N-E

THD-Po
STK404-070N-E

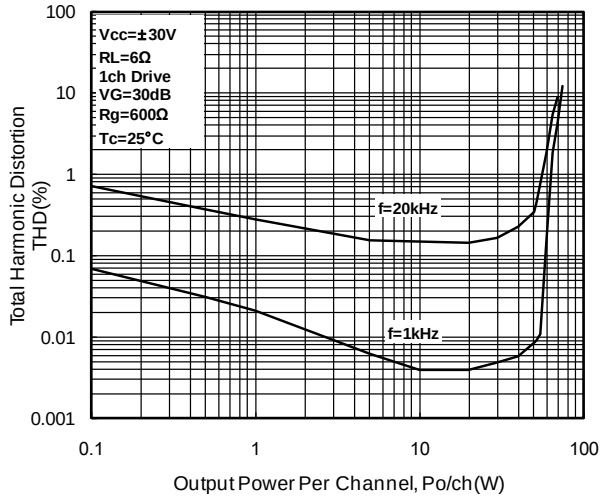

Pd-Po
STK404-070N-E

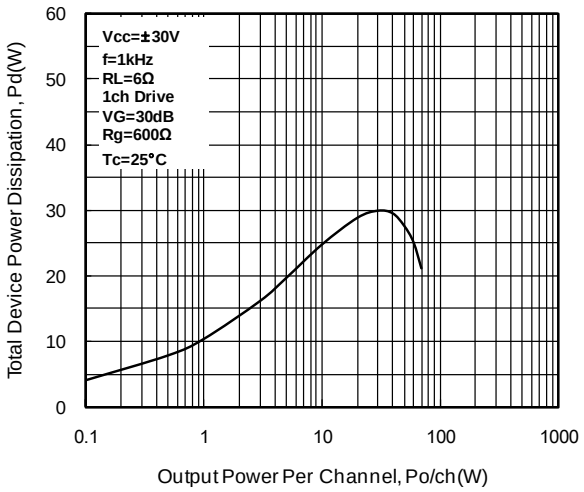

Po-Vcc
STK404-070N-E

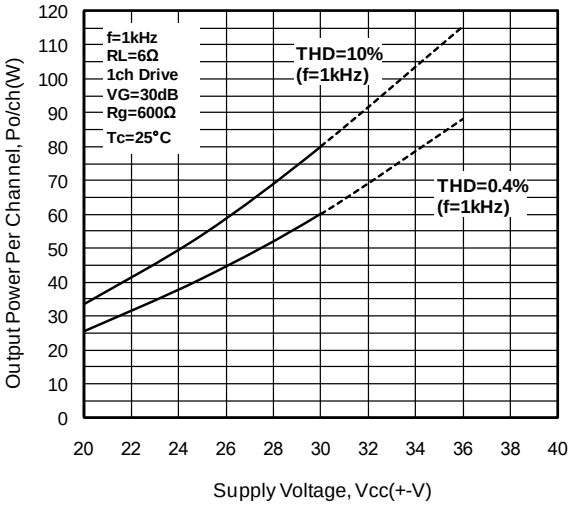

Po-f
STK404-070N-E

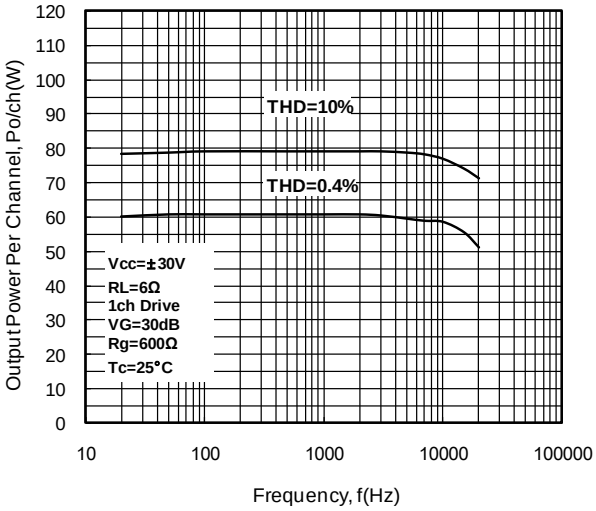

Characteristic of Evaluation Board

STK404-120N-E

THD-Po
STK404-120N-E

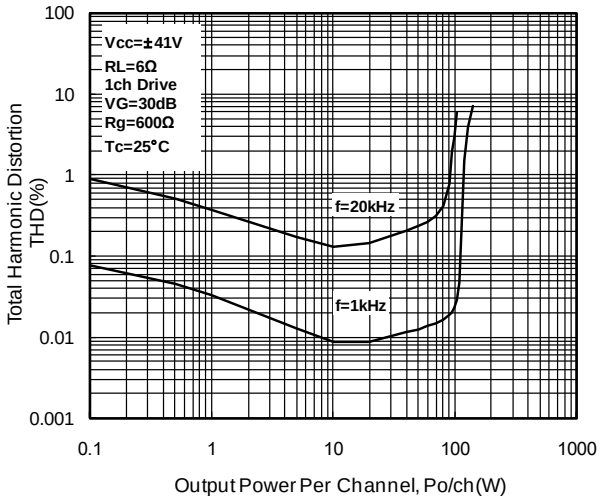

Pd-Po
STK404-120N-E

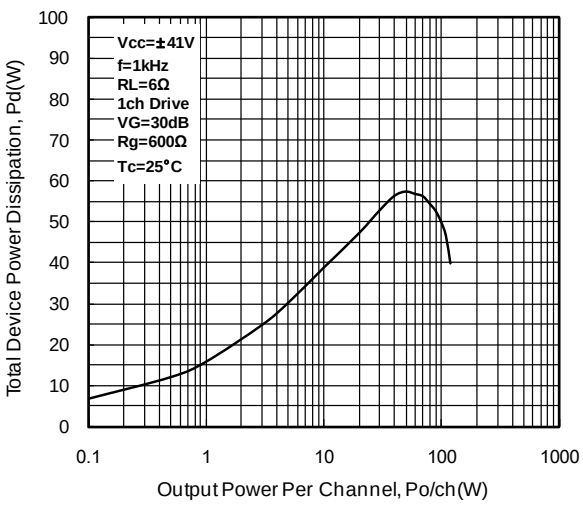

Po-Vcc
STK404-120N-E

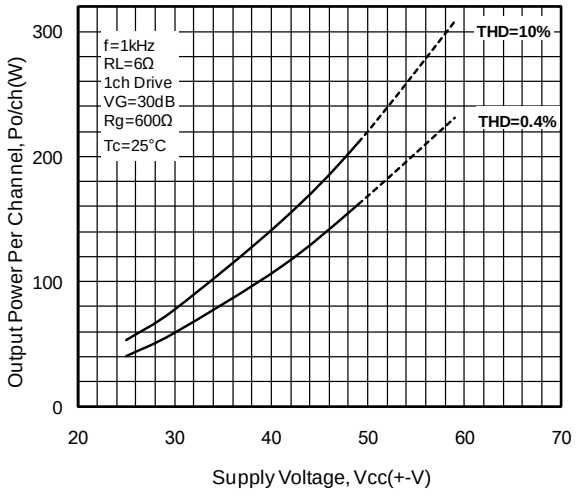

Po-f
STK404-120N-E

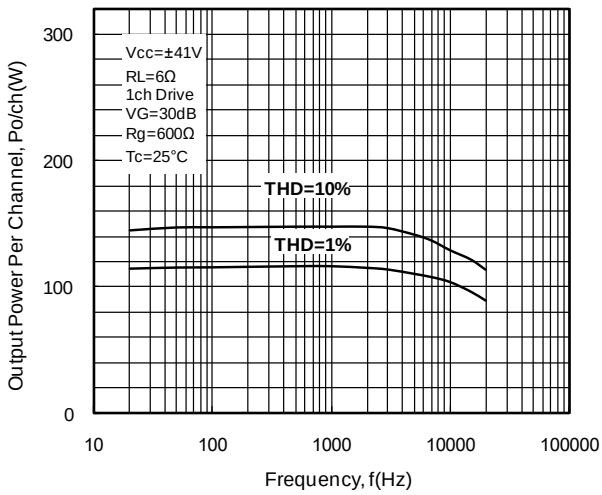

Characteristic of Evaluation Board

STK404-140N-E

THD-Po
STK404-140N-E

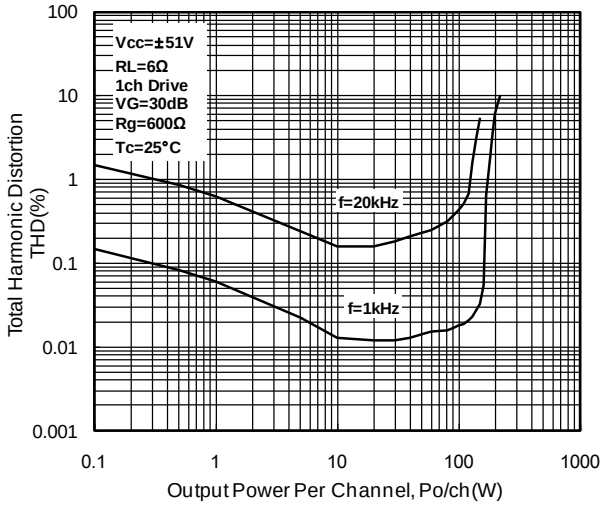

Pd-Po
STK404-140N-E

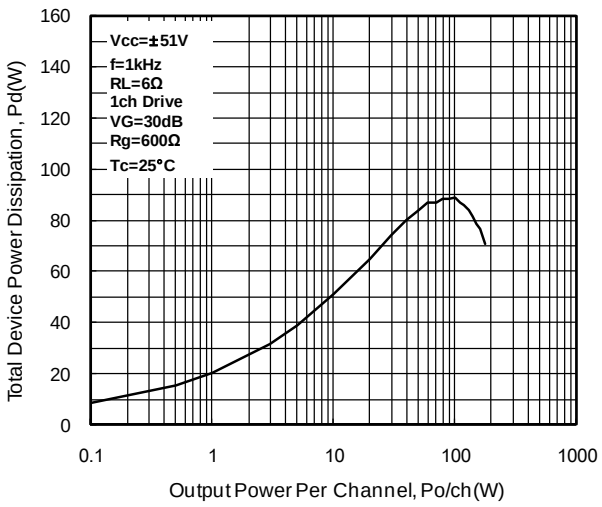

Po-Vcc
STK404-140N-E

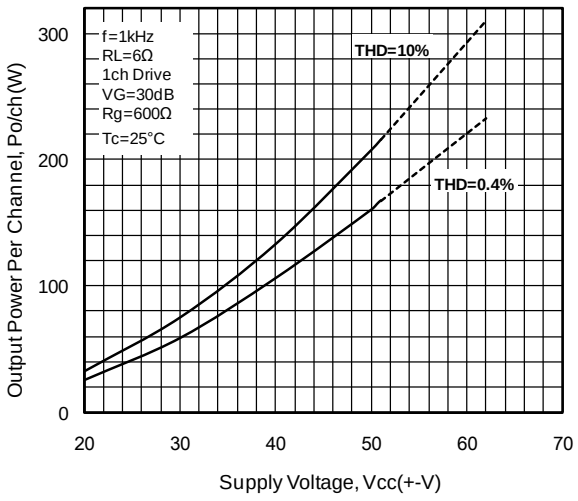

Po-f
STK404-140N-E

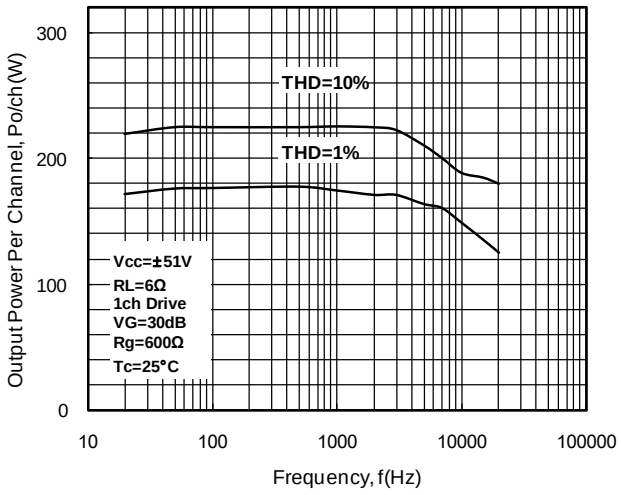

A Thermal Design Tip For STK404-070N-E Amplifier

[Thermal Design Conditions]

The thermal resistance (θc-a) of the heat-sink which manages the heat dissipation inside the Hybrid IC will be determined as follow:

(Condition 1) The case temperature (Tc) of the Hybrid IC should not exceed 125°C

$$Pd \times \theta c\text{-}a + Ta < 125°C \cdots\cdots (1)$$

Where Ta : the ambient temperature for the system

(Condition 2) The junction temperature of each power transistor should not exceed 150°C

$$Pd \times \theta c\text{-}a + Pd/N \times \theta j\text{-}c + Ta < 150°C \cdots\cdots (2)$$

Where N : the number of transistors (two for 1 channel , ten for channel)

θj-c : the thermal resistance of each transistor (see specification)

Note that the power consumption of each power transistor is assumed to be equal to the total power dissipation (Pd) divided by the number of transistors (N).

From the formula (1) and (2), we will obtain:

$$\theta c\text{-}a < (125 - Ta)/Pd \cdots\cdots (1)'$$

$$\theta c\text{-}a < (150 - Ta)/Pd - \theta j\text{-}c/N \cdots\cdots (2)'$$

The value which satisfies above formula (1)' and (2)' will be the thermal resistance for a desired heat-sink.

Note that all of the component except power transistors employed in the Hybrid IC comply with above conditions.

[Example of Thermal Design]

Generally, the power consumption of actual music signals are being estimated by the continuous signal of 1/8 P_O max. (Note that the value of 1/8 P_O max may be varied from the country to country.)

(Sample of STK404-070N-E ; 40W×1ch)

If V_{CC} is ±30V, and R_L is 6Ω, then the total power dissipation (Pd) of inside Hybrid IC is as follow;

Pd = 19.6W (at 5W output power,1/8 of P_O max)

There are two (2) transistors in Audio Section of this Hybrid IC, and thermal resistance (θj-c) of each transistor is 3.0°C/W. If the ambient temperature (Ta) is guaranteed for 50°C, then the thermal resistance (θc-a) of a desired heat-sink should be;

From (1)' $\theta c\text{-}a < (125 - 50)/19.6$

< 3.83

From (2)' $\theta c\text{-}a < (150 - 50)/19.6 - 3.0/2$

< 3.60

Therefore, in order to satisfy both (1)' and (2)', the thermal resistance of a desired Heat-sink will be 3.60°C/W.

[Note]

Above are reference only. The samples are operated with a constant power supply. Please verify the conditions when your system is actually implemented.

A Thermal Design Tip For STK404-120N-E Amplifier

[Thermal Design Conditions]

The thermal resistance (θc-a) of the heat-sink which manages the heat dissipation inside the Hybrid IC will be determined as follow:

(Condition 1) The case temperature (Tc) of the Hybrid IC should not exceed 125°C

$$Pd \times \theta c\text{-}a + Ta < 125°C \cdots\cdots (1)$$

Where Ta : the ambient temperature for the system

(Condition 2) The junction temperature of each power transistor should not exceed 150°C

$$Pd \times \theta c\text{-}a + Pd/N \times \theta j\text{-}c + Ta < 150°C \cdots\cdots (2)$$

Where N : the number of transistors (two for 1 channel , ten for channel)

θj-c : the thermal resistance of each transistor (see specification)

Note that the power consumption of each power transistor is assumed to be equal to the total power dissipation (Pd) divided by the number of transistors (N).

From the formula (1) and (2), we will obtain:

$$\theta c\text{-}a < (125 - Ta)/Pd \cdots\cdots (1)'$$

$$\theta c\text{-}a < (150 - Ta)/Pd - \theta j\text{-}c/N \cdots\cdots (2)'$$

The value which satisfies above formula (1)' and (2)' will be the thermal resistance for a desired heat-sink.

Note that all of the component except power transistors employed in the Hybrid IC comply with above conditions.

[Example of Thermal Design]

Generally, the power consumption of actual music signals are being estimated by the continuous signal of 1/8 P_O max. (Note that the value of 1/8 P_O max may be varied from the country to country.)

(Sample of STK404-120N-E ; 80W×1ch)

If V_{CC} is ±41V, and R_L is 6Ω, then the total power dissipation (Pd) of inside Hybrid IC is as follow;

Pd = 37.5W (at 10W output power,1/8 of P_O max)

There are four (2) transistors in Audio Section of this Hybrid IC, and thermal resistance (θj-c) of each transistor is 1.7°C/W. If the ambient temperature (Ta) is guaranteed for 50°C, then the thermal resistance (θc-a) of a desired heat-sink should be;

From (1)' $\theta c\text{-}a < (125 - 50)/37.5$

< 2.00

From (2)' $\theta c\text{-}a < (150 - 50)/37.5 - 1.7/2$

< 1.82

Therefore, in order to satisfy both (1)' and (2)', the thermal resistance of a desired Heat-sink will be 1.82°C/W.

[Note]

Above are reference only. The samples are operated with a constant power supply. Please verify the conditions when your system is actually implemented.

A Thermal Design Tip For STK404-140N-E Amplifier

[Thermal Design Conditions]

The thermal resistance (θc-a) of the heat-sink which manages the heat dissipation inside the Hybrid IC will be determined as follow:

(Condition 1) The case temperature (Tc) of the Hybrid IC should not exceed 125°C

$$Pd \times \theta c\text{-}a + Ta < 125°C \cdots\cdots (1)$$

Where Ta : the ambient temperature for the system

(Condition 2) The junction temperature of each power transistor should not exceed 150°C

$$Pd \times \theta c\text{-}a + Pd/N \times \theta j\text{-}c + Ta < 150°C \cdots\cdots (2)$$

Where N : the number of transistors (two for 1 channel , ten for channel)

θj-c : the thermal resistance of each transistor (see specification)

Note that the power consumption of each power transistor is assumed to be equal to the total power dissipation (Pd) divided by the number of transistors (N).

From the formula (1) and (2), we will obtain:

$$\theta c\text{-}a < (125 - Ta)/Pd \cdots\cdots (1)'$$

$$\theta c\text{-}a < (150 - Ta)/Pd - \theta j\text{-}c/N \cdots\cdots (2)'$$

The value which satisfies above formula (1)' and (2)' will be the thermal resistance for a desired heat-sink.

Note that all of the component except power transistors employed in the Hybrid IC comply with above conditions.

[Example of Thermal Design]

Generally, the power consumption of actual music signals are being estimated by the continuous signal of 1/8 P_O max. (Note that the value of 1/8 P_O max may be varied from the country to country.)

(Sample of STK404-140N-E ; 120W×1ch)

If V_{CC} is ±51V, and R_L is 6Ω, then the total power dissipation (Pd) of inside Hybrid IC is as follow;

$Pd = 57.2W$ (at 15W output power,1/8 of P_O max)

There are four (2) transistors in Audio Section of this Hybrid IC, and thermal resistance (θj-c) of each transistor is 1.1°C/W. If the ambient temperature (Ta) is guaranteed for 50°C, then the thermal resistance (θc-a) of a desired heat-sink should be;

From (1)' $\theta c\text{-}a < (125 - 50)/57.2$

< 1.31

From (2)' $\theta c\text{-}a < (150 - 50)/57.2 - 1.1/2$

< 1.19

Therefore, in order to satisfy both (1)' and (2)', the thermal resistance of a desired Heat-sink will be 1.19°C/W.

[Note]

Above are reference only. The samples are operated with a constant power supply. Please verify the conditions when your system is actually implemented.

STK404-000N-Ese Stand-by control & Mute control Application

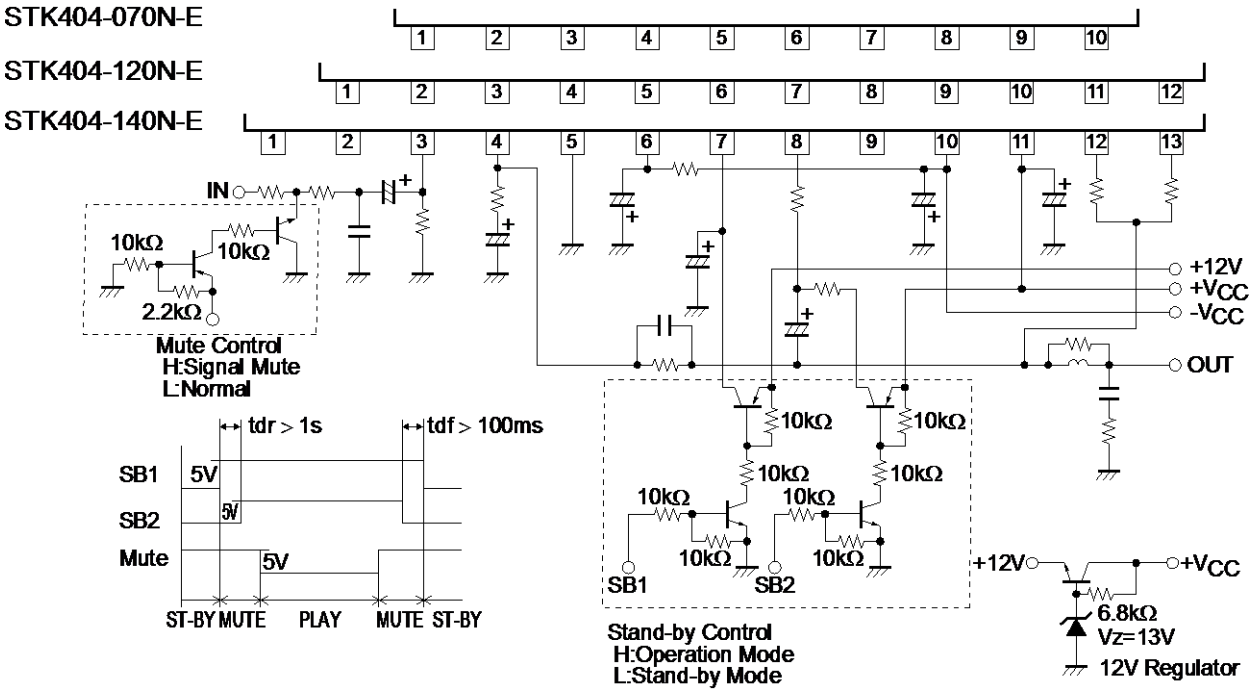

STK404-000N-Esr Thermal shut down Application

STK404-070N-E No thermal sensor

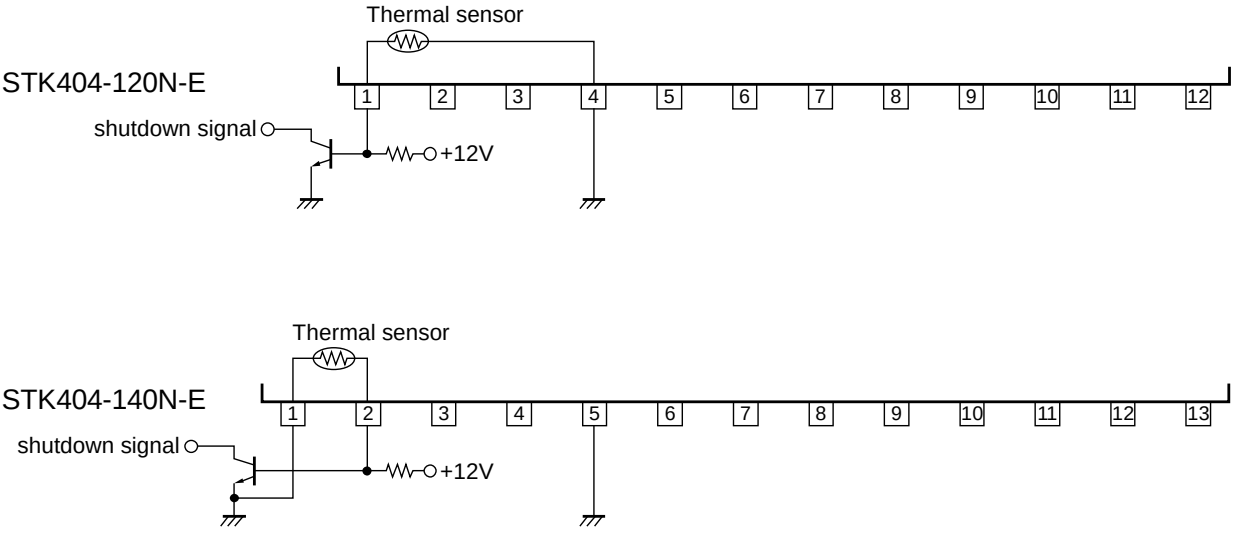

Thermal Sensor Characteristic

STK404-120N-E
Rp – Tp

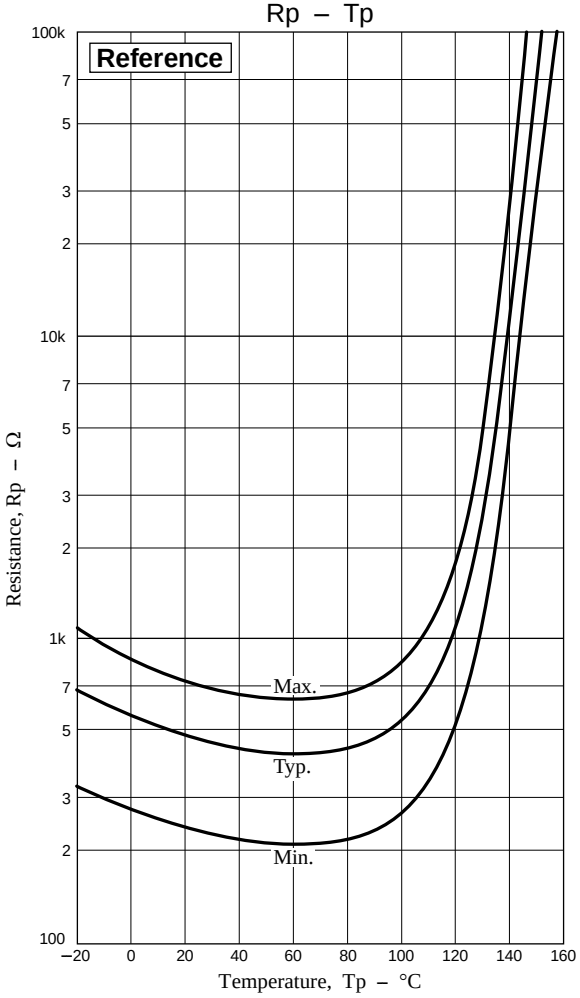

STK404-140N-E
Rp – Tp

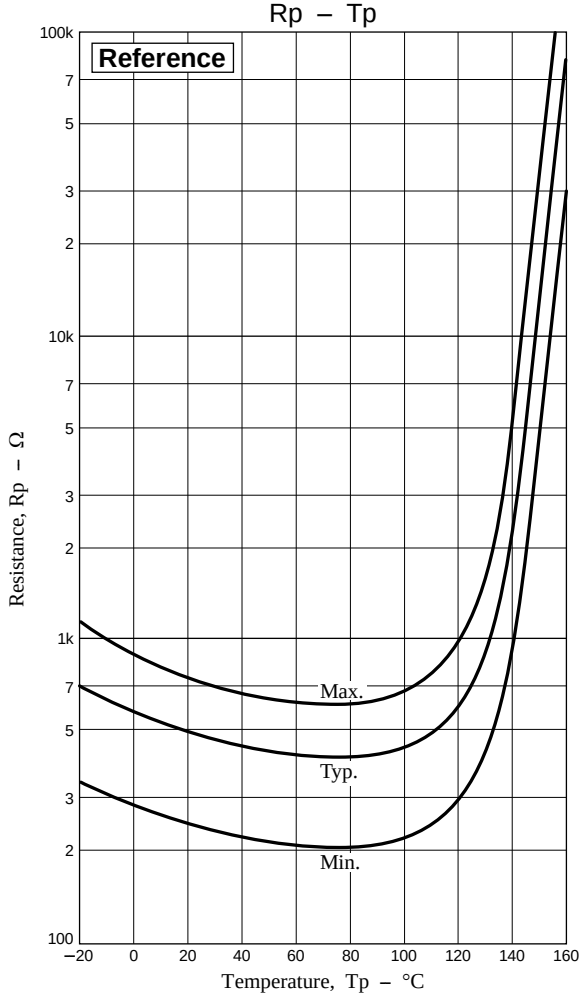

STK404-070N-E Road-Short & DC Voltage Protection Application

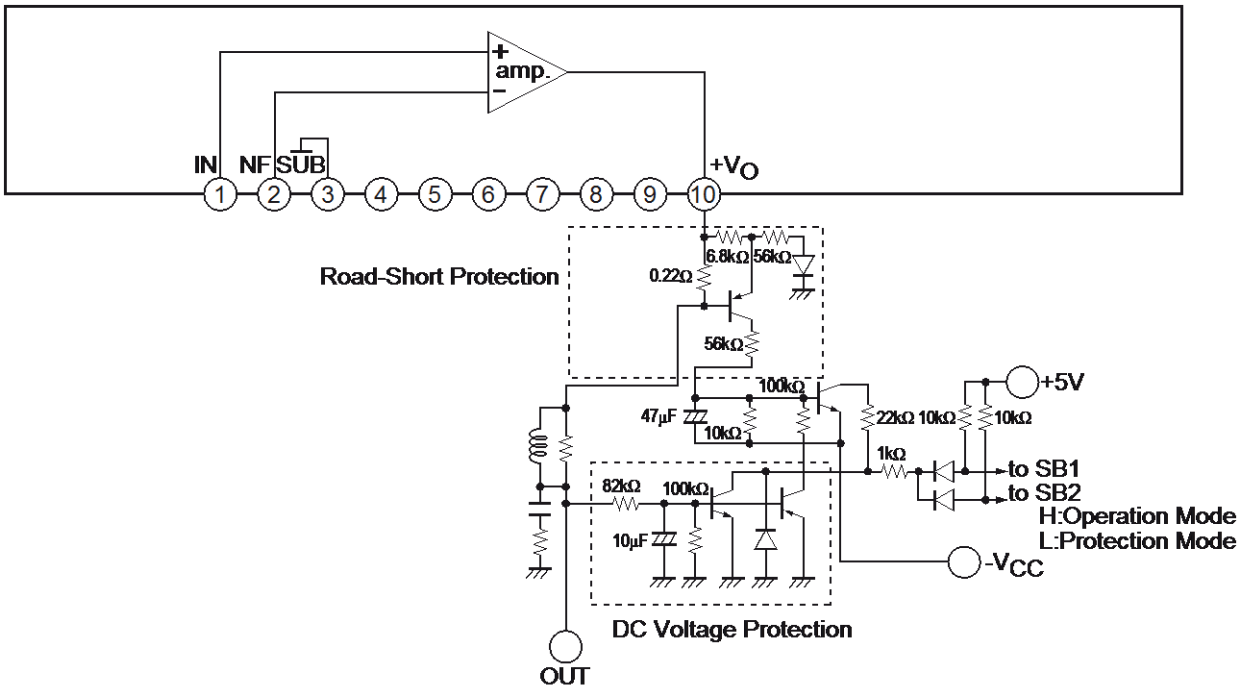

STK404-120N-E Road-Short & DC Voltage Protection Application

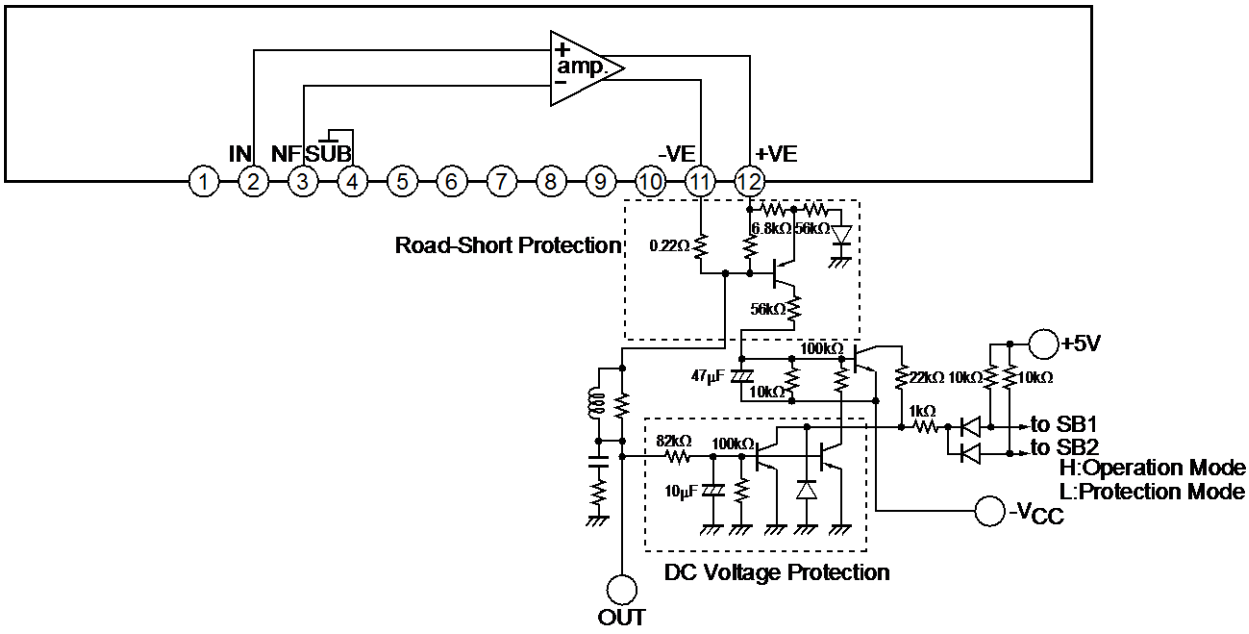

STK404-140N-E Road-Short & DC Voltage Protection Application

