Ordering number: EN 5062

Thick Film Hybrid IC

No. 5062

STK190-020

Video Output Bias Circuit for CRT Displays

Overview

The STK190-020 is a video output bias adjustment hybrid IC for high-definition CRT displays. It incorporates video output stage RGB cutoff and brightness adjustment circuits into a single package. All functions can be controlled by 0 to 5V DC voltage inputs, making it ideal for multi-scan CRT displays with built-in microcontrollers.

Features

- DC voltage-controlled RGB cutoff and brightness adjustment circuits
- 0 to 5V DC voltage control inputs for simple drive from an external microcontroller
- IMST (insulated metal substrate technology) excellent heat dissipation characteristic make a heatsink unnecessary.
- V_{CC} max = 200V and high withstand voltage design
- Compact, light weight package
- Wide 70V cutoff adjustment range and 20V brightness adjustment range (using an external variable resistor)
- Wide bias variable range so that a fixed voltage can be applied to the G1 grid. Furthermore, the bias circuit high-voltage design means that G1 can be connected to ground, eliminating the need for a negative supply.

Internal Functions

- RGB cutoff adjustment (DC control for each channel)
- Brightness adjustment (DC control)

Package Dimensions

unit: mm

4157

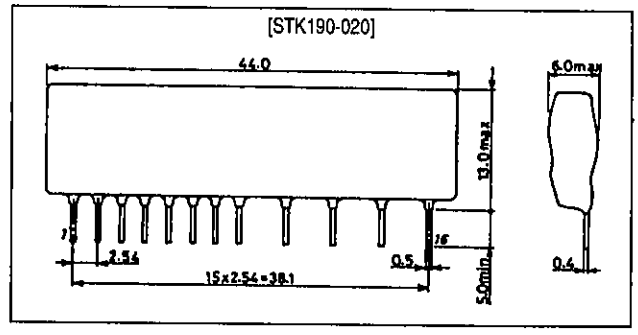

SANYO Electric Co., Ltd. Semiconductor Business Headquarters
TOKYO OFFICE Tokyo Bldg., 1-10, 1 Chome, Ueno, Taito-ku, TOKYO, 110 JAPAN

Specifications

Maximum Ratings at Ta = 25°C

Parameter	Symbol	Conditions	Ratings	Unit
Maximum supply voltage	$V_{CC}1$ max	Pin 1	15	V
	$V_{CC}2$ max	Pin 16	200	V
Maximum emitter current	Ie	Tr2, 4, 6 (1s DC)	100	mA
Allowable power dissipation	Pd max	Topr ≤ +75°C	450	mW
Operating temperature	Topr		–20 to +75	°C
Storage temperature	Tstg		–30 to +100	°C

Recommended Operating Conditions at Ta = 25°C

Parameter	Symbol	Conditions	Ratings	Unit
Supply voltage	$V_{CC}1$		12	V
	$V_{CC}2$		120 to 160	V

Operating Characteristics at Ta = 25°C, $V_{CC}1$ = 12V, $V_{CC}2$ = 160V, specified test circuit

Parameter	Symbol	Conditions	min	typ	max	Unit
Supply current	$I_{CCO}(1)$	$V_{CC}1$ (pin 1), V3 = V5 = V7 = 2.5V	–	1.2	1.6	mA
	$I_{CCO}(2)$	$V_{CC}2$ (pin 16), V3 = V5 = V7 = 2.5V	–	0.9	1.3	mA
Output voltage	V_N	Per channel output, V3 = V5 = V7 = 2.5V	114	–	124	V
	ΔV_N	Per channel output, V3 = V5 = V7 = 0.6 to 4.5V	65	70	–	V
BRT control pin voltage	V_{BRT}	Pins 4, 6, and 8 V3 = V5 = V7 = 2.5V	4.6	4.8	5.0	V

Note. All tests are measured using a fixed-voltage supply unless otherwise specified.

Equivalent Circuit

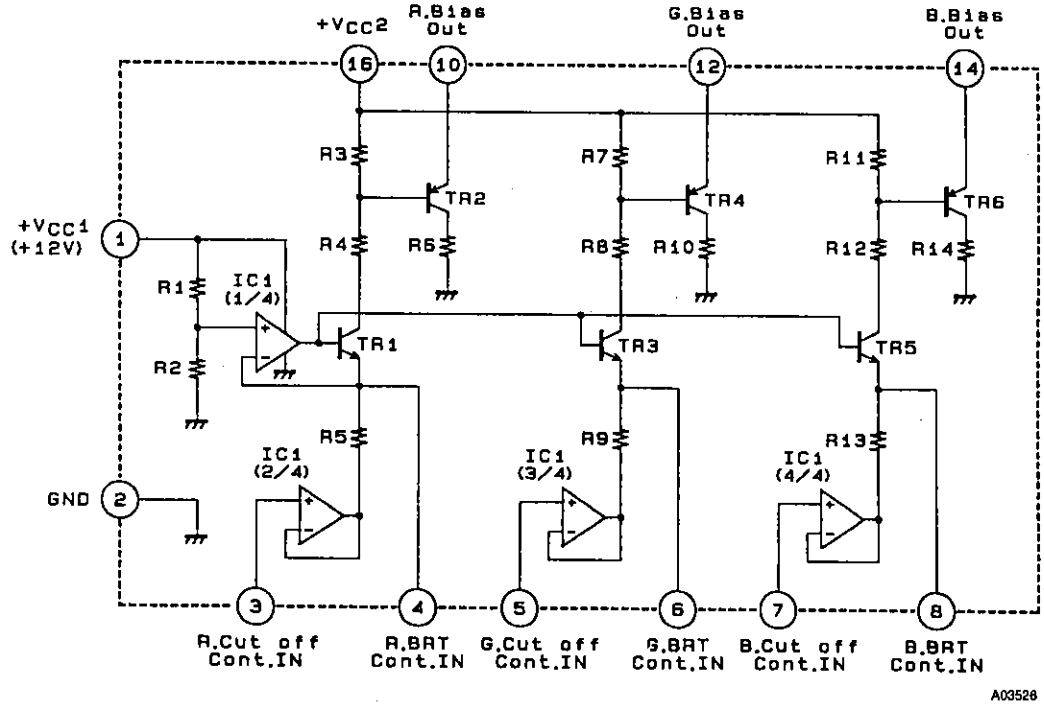

Test Circuit

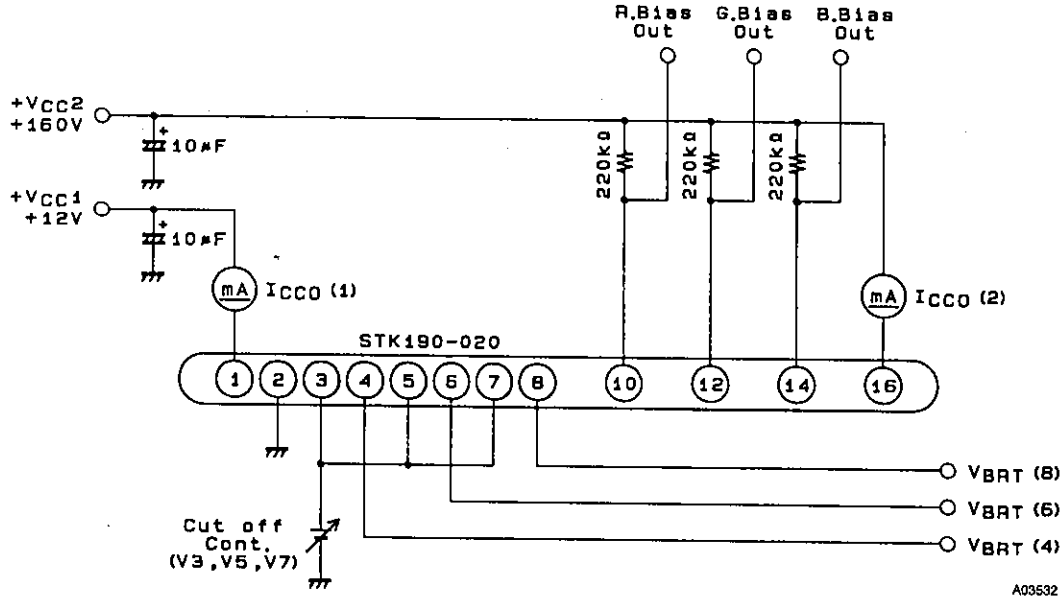

Sample Application Circuit

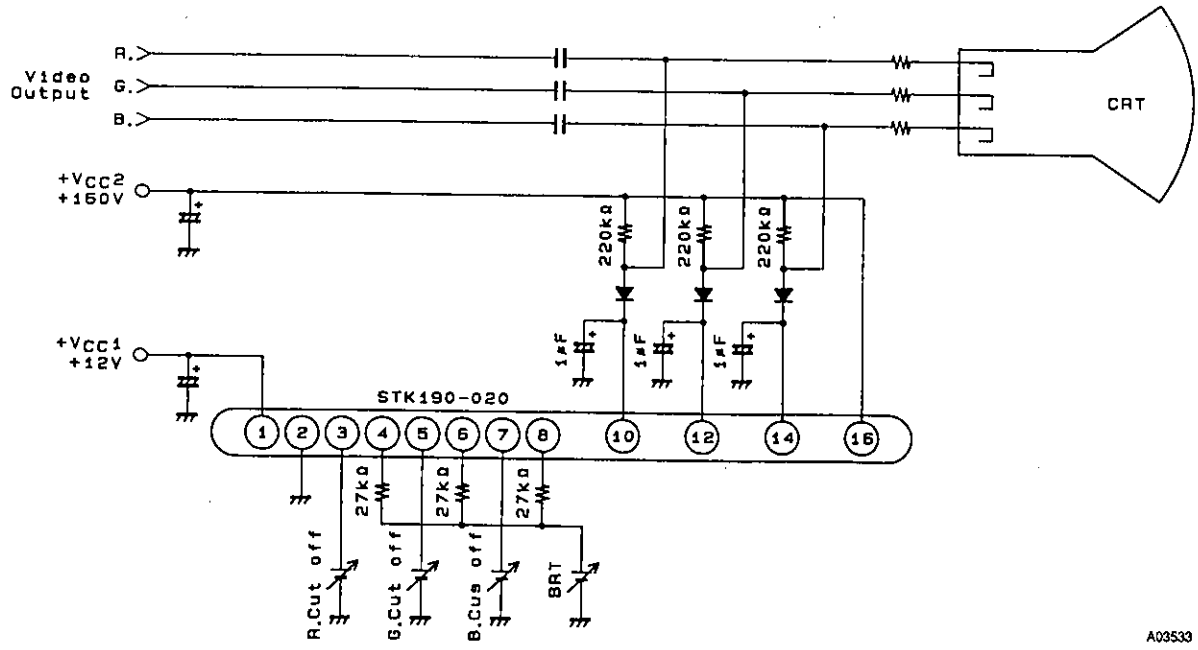

Characteristics Data

RGB bias output — RGB cutoff control

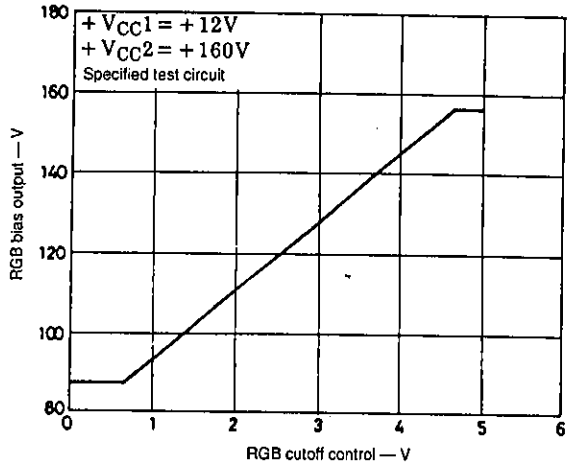

RGB bias output — RGB cutoff control

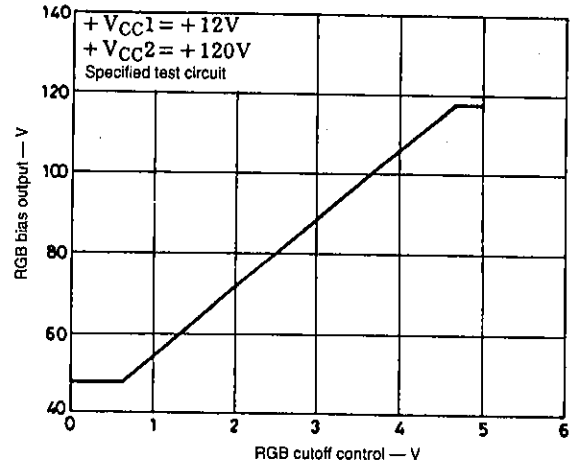

Series Organization

Type No.	Maximum ratings		Recommended supply voltage [V]	Electrical characteristics		
	V_{CC} max [V]	Pd max [mW]		V_{CC} [V]	Output voltage[1] typ. [V]	Output voltage[2] typ. [V]
STK190-010	+150	450	90 to 120	+120	80	45
STK190-020	+200	450	120 to 160	+160	119	85

1. V3 = V5 = V7 = 2.5V
2. V3 = V5 = V7 = 0V

Design Rationalization

Existing Method

Bias adjustment on both the CRT cathode and G1 grid.
(A variable negative supply is applied to G1.)

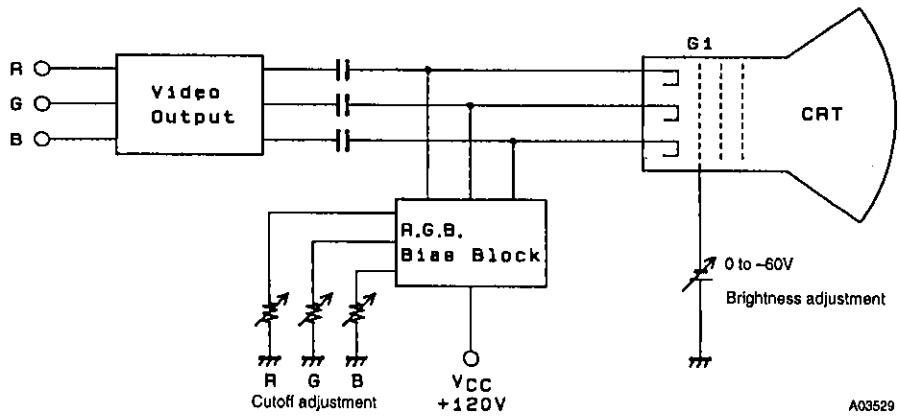

STK190-010 Method

Bias adjustment on the CRT cathode only.
(A fixed negative supply voltage is applied to G1.)

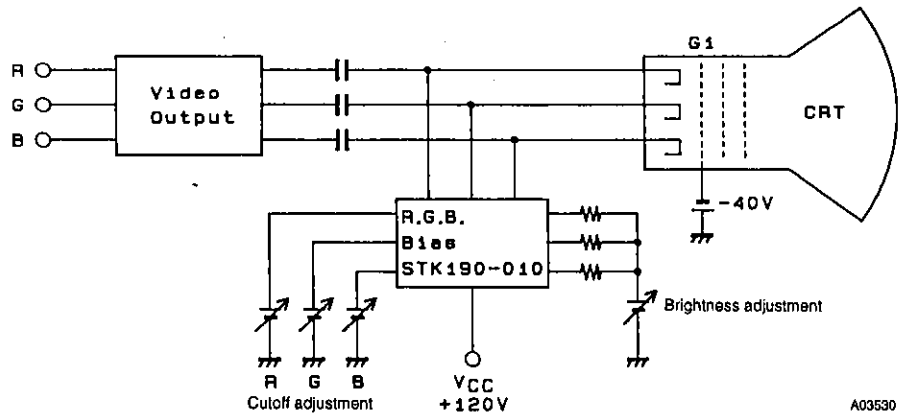

STK190-020 Method

Bias adjustment on the CRT cathode only.
(G1 is connected to ground, and therefore a negative supply is not required.)

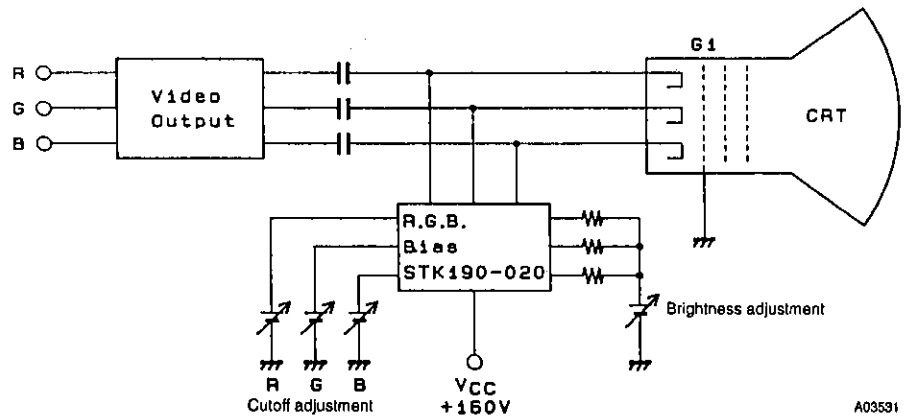

- No products described or contained herein are intended for use in surgical implants, life-support systems, aerospace equipment, nuclear power control systems, vehicles, disaster/crime-prevention equipment and the like, the failure of which may directly or indirectly cause injury, death or property loss.
- Anyone purchasing any products described or contained herein for an above-mentioned use shall:
  ① Accept full responsibility and indemnify and defend SANYO ELECTRIC CO., LTD., its affiliates, subsidiaries and distributors and all their officers and employees, jointly and severally, against any and all claims and litigation and all damages, cost and expenses associated with such use:
  ② Not impose any responsibility for any fault or negligence which may be cited in any such claim or litigation on SANYO ELECTRIC CO., LTD., its affiliates, subsidiaries and distributors or any of their officers and employees, jointly or severally.
- Information (including circuit diagrams and circuit parameters) herein is for example only; it is not guaranteed for volume production. SANYO believes information herein is accurate and reliable, but no guarantees are made or implied regarding its use or any infringements of intellectual property rights or other rights of third parties.

This catalog provides information as of June, 1995. Specifications and information herein are subject to change without notice.