STGP7NC60H - STGD7NC60H

N-CHANNEL 14A - 600V TO-220/DPAK
Very Fast PowerMESH™ IGBT

Table 1: General Features

TYPE	V_{CES}	$V_{CE(sat)}$ (Max) @25°C	I_C @100°C
STGP7NC60H	600 V	< 2.5 V	14 A
STGD7NC60HT4	600 V	< 2.5 V	14 A

- LOWER ON-VOLTAGE DROP (V_{cesat})
- OFF LOSSES INCLUDE TAIL CURRENT
- LOWER C_{RES}/C_{IES} RATIO
- HIGH FREQUENCY OPERATION UP TO 70 KHz
- NEW GENERATION PRODUCTS WITH TIGHTER PARAMETER DISTRIBUTION

DESCRIPTION

Using the latest high voltage technology based on a patented strip layout, STMicroelectronics has designed an advanced family of IGBTs, the PowerMESH™ IGBTs, with outstanding performances. The suffix "H" identifies a family optimized for high frequency applications in order to achieve very high switching performances (reduced tfall) maintaining a low voltage drop.

APPLICATIONS

- HIGH FREQUENCY INVERTERS
- SMPS AND PFC IN BOTH HARD SWITCH AND RESONANT TOPOLOGIES
- MOTOR DRIVERS

Figure 1: Package

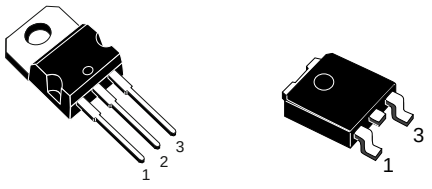

TO-220 **DPAK**

Weight for TO-220: 1.92gr ± 0.01
Weight for DPAK: 0.38gr ± 0.01

Figure 2: Internal Schematic Diagram

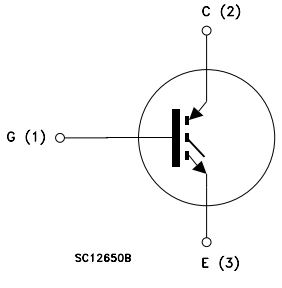

Table 2: Order Code

PART NUMBER	MARKING	PACKAGE	PACKAGING
STGP7NC60H	GP7NC60H	TO-220	TUBE
STGD7NC60HT4	D7NC60H	DPAK	TAPE & REEL

Table 3: Absolute Maximum ratings

Symbol	Parameter	Value		Unit
		TO-220	DPAK	
V_{CES}	Collector-Emitter Voltage (V_{GS} = 0)	600		V
V_{ECR}	Emitter-Collector Voltage	20		V
V_{GE}	Gate-Emitter Voltage	±20		V
I_C	Collector Current (continuous) at T_C = 25°C (#)	25		A
I_C	Collector Current (continuous) at T_C = 100°C (#)	14		A
I_{CM} (▣)	Collector Current (pulsed)	50		A
P_{TOT}	Total Dissipation at T_C = 25°C	80	70	W
	Derating Factor	0.64	0.56	W/°C
T_{stg}	Storage Temperature	– 55 to 150		°C
T_j	Operating Junction Temperature			

(▣) Pulse width limited by max. junction temperature.

Table 4: Thermal Data

			Min.	Typ.	Max.	
Rthj-case	Thermal Resistance Junction-case	TO-220			1.56	°C/W
		DPAK			1.78	
Rthj-amb	Thermal Resistance Junction-ambient	TO-220			62.5	°C/W
		DPAK			100	
T_L	Maximum Lead Temperature for Soldering Purpose (1.6 mm from case, for 10 sec.)	TO-220		300		°C
		DPAK		275		

ELECTRICAL CHARACTERISTICS (T_{CASE} =25°C UNLESS OTHERWISE SPECIFIED)

Table 5: Main Parameters

Symbol	Parameter	Test Conditions	Min.	Typ.	Max.	Unit
$V_{BR(CES)}$	Collector-Emitter Breakdown Voltage	I_C = 1 mA, V_{GE} = 0	600			V
I_{CES}	Collector cut-off Current (V_{GE} = 0)	V_{CE} = Max Rating, T_C= 25 °C V_{CE} = Max Rating, T_C= 125 °C			10 1	µA mA
I_{GES}	Gate-Emitter Leakage Current (V_{CE} = 0)	V_{GE} = ± 20V , V_{CE} = 0			±100	nA
$V_{GE(th)}$	Gate Threshold Voltage	V_{CE} = V_{GE}, I_C = 250 µA	3.75		5.75	V
$V_{CE(sat)}$	Collector-Emitter Saturation Voltage	V_{GE} = 15V, I_C = 7 A V_{GE} = 15V, I_C = 7 A, Tc= 125°C		1.85 1.7	2.5	V V

(#) Calculated according to the iterative formula:

$$I_C(T_C) = \frac{T_{JMAX} - T_C}{R_{THJ-C} \times V_{CESAT(MAX)}(T_C, I_C)}$$

ELECTRICAL CHARACTERISTICS (CONTINUED)

Table 6: Dynamic

Symbol	Parameter	Test Conditions	Min.	Typ.	Max.	Unit
g_{fs} (1)	Forward Transconductance	V_{CE} = 15 V , I_C = 7 A		4.30		S
C_{ies}	Input Capacitance	V_{CE} = 25 V, f= 1 MHz, V_{GE} = 0		720		pF
C_{oes}	Output Capacitance			81		pF
C_{res}	Reverse Transfer Capacitance			17		pF
Q_g Q_{ge} Q_{gc}	Total Gate Charge Gate-Emitter Charge Gate-Collector Charge	V_{CE} = 390 V, I_C = 7 A, V_{GE} = 15 V (see Figure 21)		35 7 16	48	nC nC nC
I_{CL}	Turn-Off SOA Minimum Current	V_{clamp} = 480 V , Tj = 150°C R_G = 10 Ω, V_{GE} = 15 V	50			A

(1) Pulsed: Pulse duration= 300 µs, duty cycle 1.5%

Table 7: Switching On

Symbol	Parameter	Test Conditions	Min.	Typ.	Max.	Unit
$t_{d(on)}$ t_r $(di/dt)_{on}$	Turn-on Delay Time Current Rise Time Turn-on Current Slope	V_{CC} = 390 V, I_C = 7 A R_G= 10 Ω, V_{GE}= 15V, Tj= 25°C (see Figure 18)		18.5 8.5 1060		ns ns A/µs
$t_{d(on)}$ t_r $(di/dt)_{on}$	Turn-on Delay Time Current Rise Time Turn-on Current Slope	V_{CC} = 390 V, I_C = 7 A R_G= 10 Ω, V_{GE}= 15V, Tj= 125°C (see Figure 19)		18.5 7 1000		ns ns A/µs

Table 8: Switching Off

Symbol	Parameter	Test Conditions	Min.	Typ.	Max.	Unit
$t_r(V_{off})$	Off Voltage Rise Time	V_{cc} = 390 V, I_C = 7 A, R_G = 10 Ω , V_{GE} = 15 V T_J = 25 °C (see Figure 19)		27		ns
$t_{d(off)}$	Turn-off Delay Time			72		ns
t_f	Current Fall Time			60		ns
$t_r(V_{off})$	Off Voltage Rise Time	V_{cc} = 390 V, I_C = 7 A, R_G = 10 Ω , V_{GE} = 15 V Tj = 125 °C (see Figure 19)		56		ns
$t_{d(off)}$	Turn-off Delay Time			116		ns
t_f	Current Fall Time			105		ns

Table 9: Switching Energy

Symbol	Parameter	Test Conditions	Min.	Typ.	Max	Unit
Eon (2) E_{off} (3) E_{ts}	Turn-on Switching Losses Turn-off Switching Loss Total Switching Loss	V_{CC} = 390 V, I_C = 7 A R_G= 10 Ω, V_{GE}= 15V, Tj= 25°C (see Figure 19)		95 115 210	125 150 275	µJ µJ µJ
Eon (2) E_{off} (3) E_{ts}	Turn-on Switching Losses Turn-off Switching Loss Total Switching Loss	V_{CC} = 390 V, I_C = 7 A R_G= 10 Ω, V_{GE}= 15V, Tj= 125°C (see Figure 19)		140 215 355		µJ µJ µJ

2) Eon is the turn-on losses when a typical diode is used in the test circuit in figure 2. If the IGBT is offered in a package with a co-pack diode, the co-pack diode is used as external diode. IGBTs & DIODE are at the same temperature (25°C and 125°C)

(3)Turn-off losses include also the tail of the collector current.

Figure 3: Output Characteristics

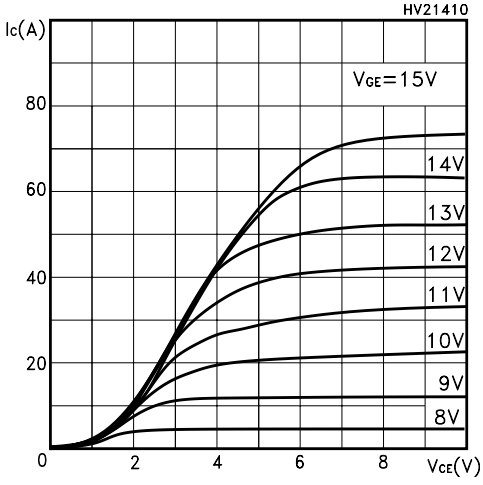

Figure 4: Transconductance

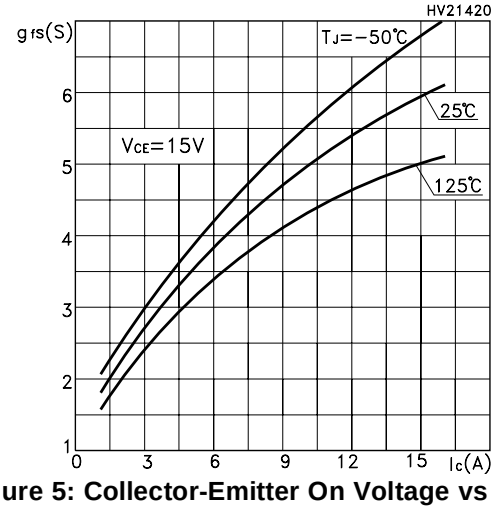

Figure 5: Collector-Emitter On Voltage vs Collector Current

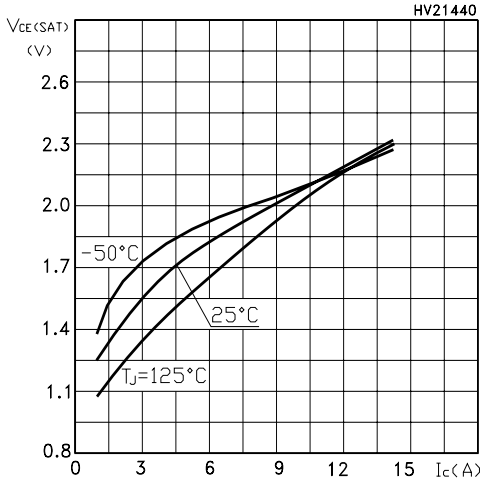

Figure 6: Transfer Characteristics

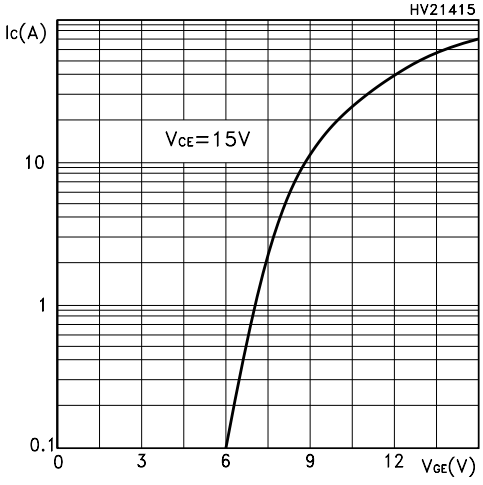

Figure 7: Collector-Emitter On Voltage vs Temperature

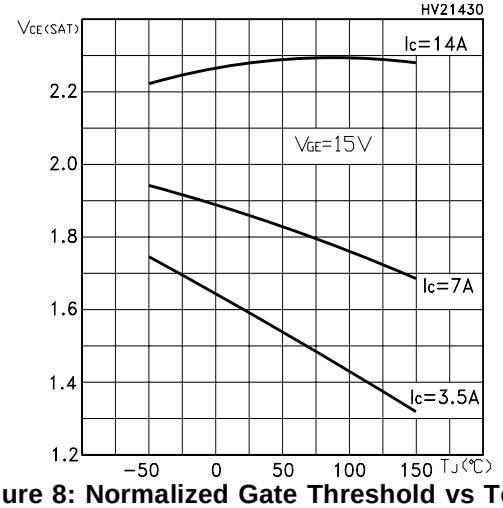

Figure 8: Normalized Gate Threshold vs Temperature

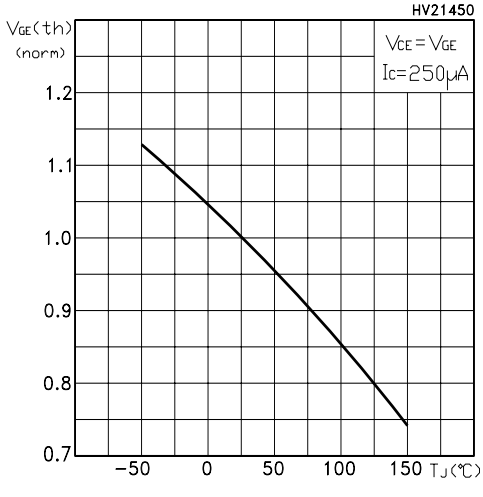

Figure 9: Normalized Breakdown Voltage vs Temperature

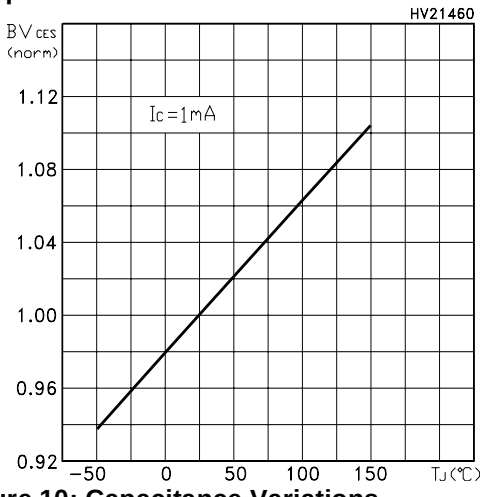

Figure 10: Capacitance Variations

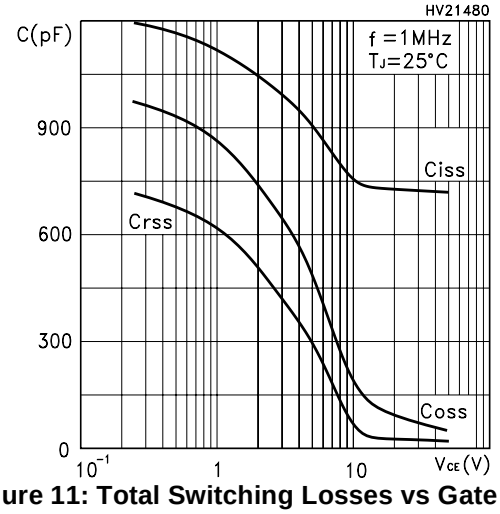

Figure 11: Total Switching Losses vs Gate Resistance

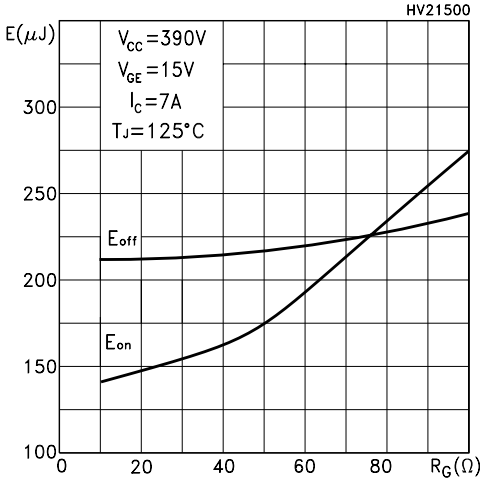

Figure 12: Gate Charge vs Gate-Emitter Voltage

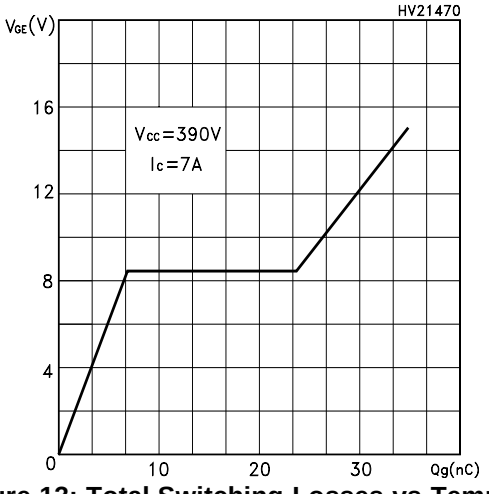

Figure 13: Total Switching Losses vs Temperature

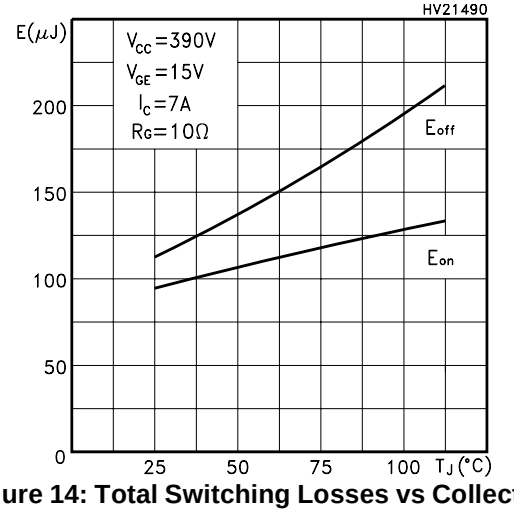

Figure 14: Total Switching Losses vs Collector Current

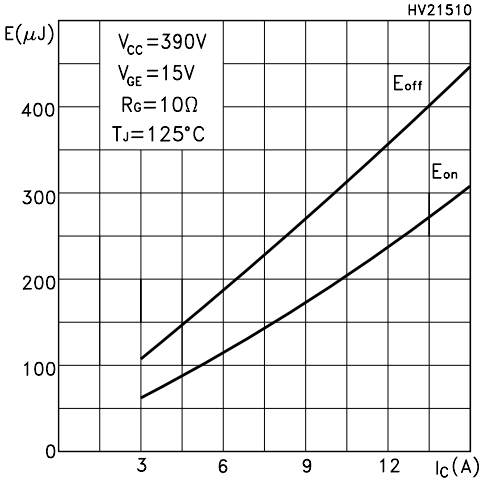

Figure 15: Thermal Impedance for TO-220

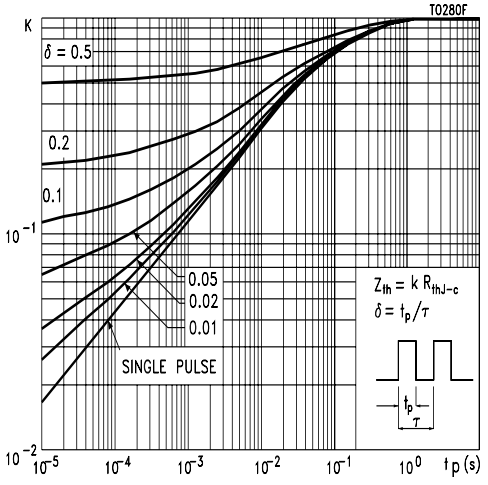

Figure 16: Thermal Impedance for DPAK

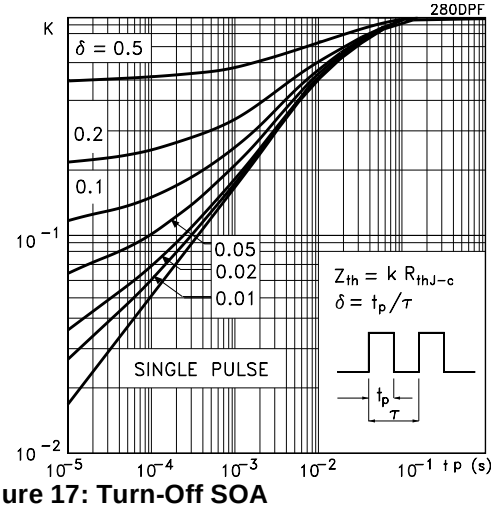

Figure 17: Turn-Off SOA

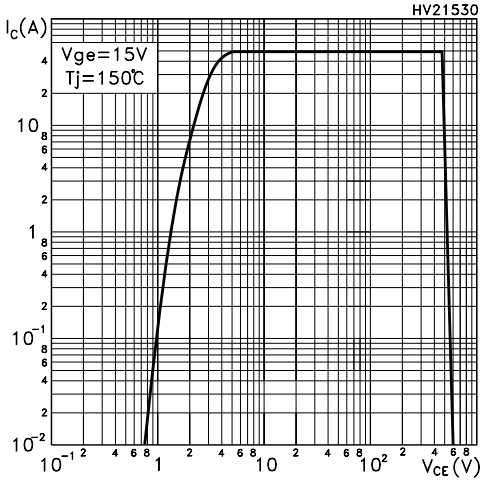

Figure 18: Ic vs Frequency

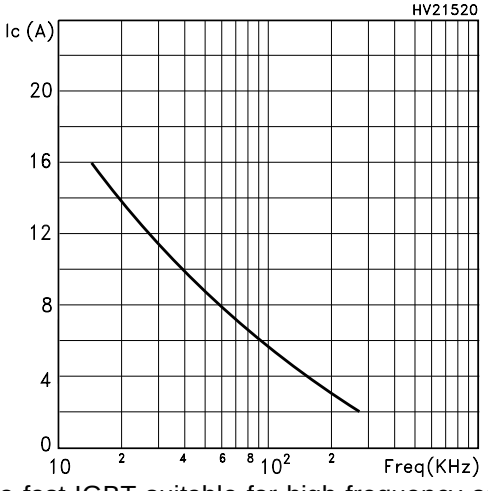

For a fast IGBT suitable for high frequency applications, the typical collector current vs. maximum operating frequency curve is reported. That frequency is defined as follows:

$$f_{MAX} = (P_D - P_C) / (E_{ON} + E_{OFF})$$

1) The maximum power dissipation is limited by maximum junction to case thermal resistance:

$$P_D = \Delta T / R_{THJ\text{-}C}$$

considering $\Delta T = T_J - T_C = 125\ °C - 75\ °C = 50°C$

2) The conduction losses are:

$$P_C = I_C * V_{CE(SAT)} * \delta$$

with 50% of duty cycle, V_{CESAT} typical value @125°C.

3) Power dissipation during ON & OFF commutations is due to the switching frequency:

$$P_{SW} = (E_{ON} + E_{OFF}) * freq.$$

4) Typical values @ 125°C for switching losses are used (test conditions: V_{CE} = 390V, V_{GE} = 15V, R_G = 3.3 Ohm). Furthermore, diode recovery energy is included in the E_{ON} (see note 2), while the tail of the collector current is included in the E_{OFF} measurements (see note 3).

Figure 19: Test Circuit for Inductive Load Switching

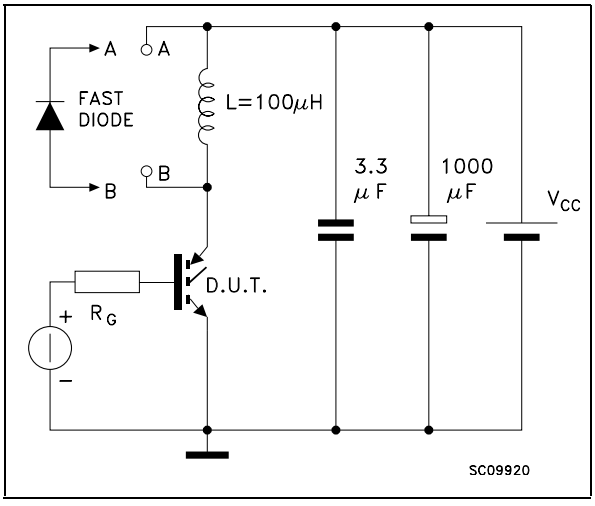

Figure 20: Switching Waveforms

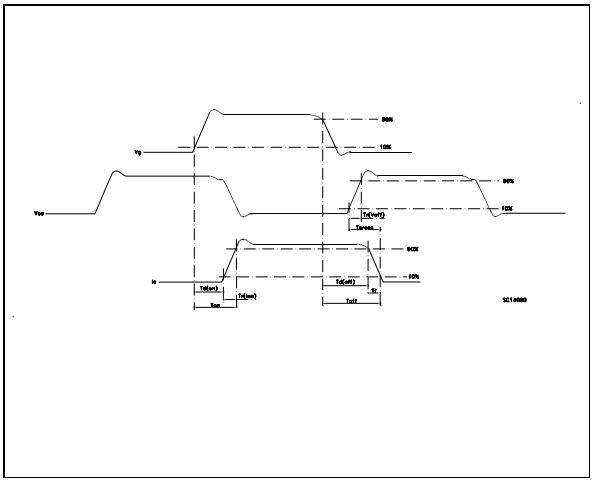

Figure 21: Gate Charge Test Circuit

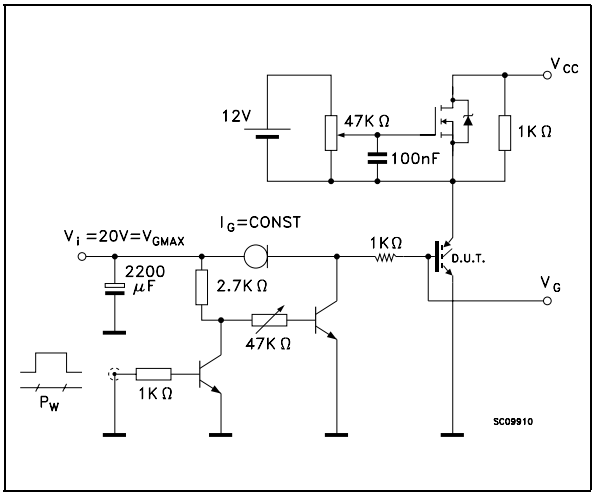

TO-220 MECHANICAL DATA

DIM.	mm.			inch		
	MIN.	TYP	MAX.	MIN.	TYP.	MAX.
A	4.40		4.60	0.173		0.181
b	0.61		0.88	0.024		0.034
b1	1.15		1.70	0.045		0.066
c	0.49		0.70	0.019		0.027
D	15.25		15.75	0.60		0.620
E	10		10.40	0.393		0.409
e	2.40		2.70	0.094		0.106
e1	4.95		5.15	0.194		0.202
F	1.23		1.32	0.048		0.052
H1	6.20		6.60	0.244		0.256
J1	2.40		2.72	0.094		0.107
L	13		14	0.511		0.551
L1	3.50		3.93	0.137		0.154
L20		16.40			0.645	
L30		28.90			1.137	
øP	3.75		3.85	0.147		0.151
Q	2.65		2.95	0.104		0.116

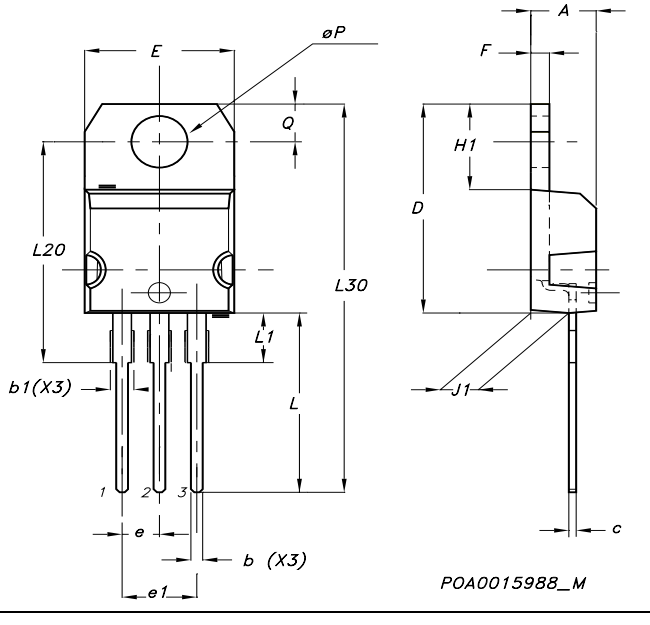

TO-252 (DPAK) MECHANICAL DATA

DIM.	mm			inch		
	MIN.	TYP.	MAX.	MIN.	TYP.	MAX.
A	2.20		2.40	0.087		0.094
A1	0.90		1.10	0.035		0.043
A2	0.03		0.23	0.001		0.009
B	0.64		0.90	0.025		0.035
B2	5.20		5.40	0.204		0.213
C	0.45		0.60	0.018		0.024
C2	0.48		0.60	0.019		0.024
D	6.00		6.20	0.236		0.244
E	6.40		6.60	0.252		0.260
G	4.40		4.60	0.173		0.181
H	9.35		10.10	0.368		0.398
L2		0.8			0.031	
L4	0.60		1.00	0.024		0.039
V2	0°		8°	0°		0°

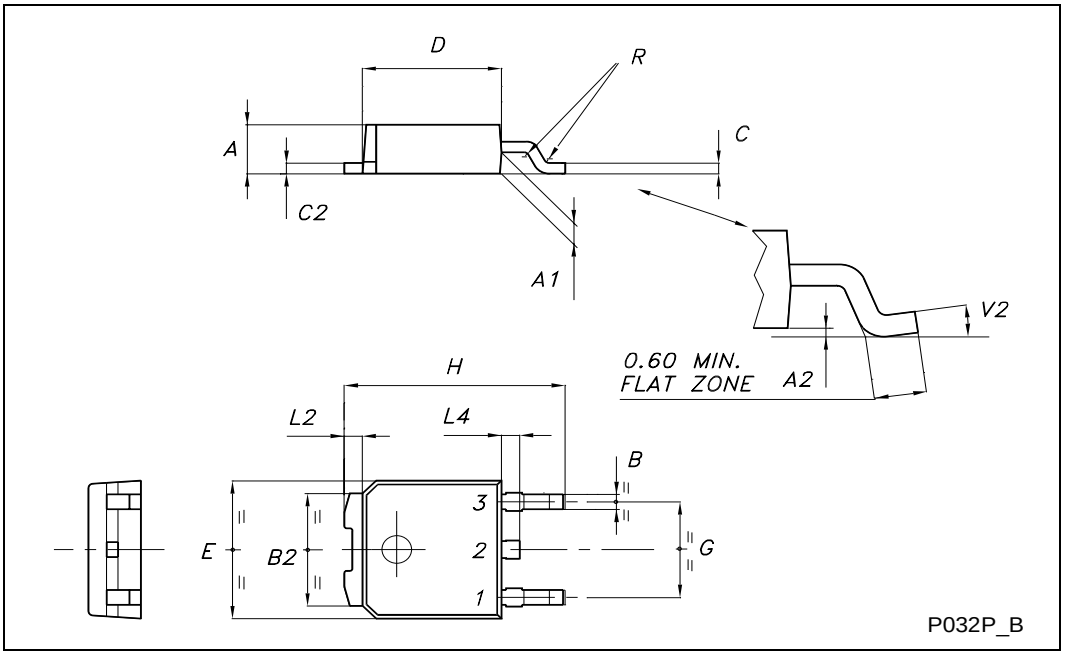

DPAK FOOTPRINT

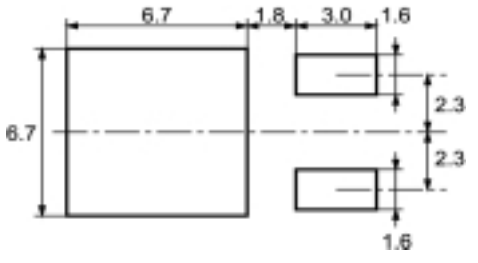

All dimensions are in millimeters

TAPE AND REEL SHIPMENT

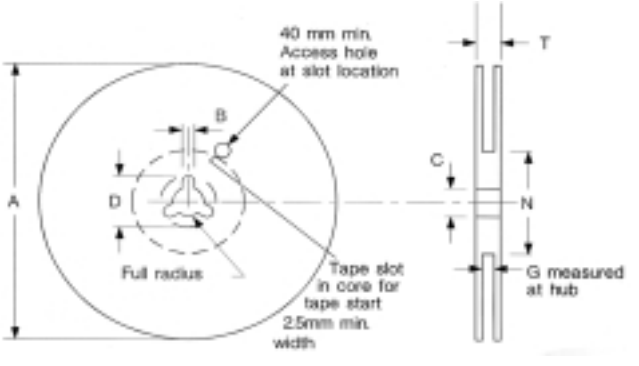

REEL MECHANICAL DATA

DIM.	mm		inch	
	MIN.	MAX.	MIN.	MAX.
A		330		12.992
B	1.5		0.059	
C	12.8	13.2	0.504	0.520
D	20.2		0.795	
G	16.4	18.4	0.645	0.724
N	50		1.968	
T		22.4		0.881

BASE QTY	BULK QTY
2500	2500

TAPE MECHANICAL DATA

DIM.	mm		inch	
	MIN.	MAX.	MIN.	MAX.
A0	6.8	7	0.267	0.275
B0	10.4	10.6	0.409	0.417
B1		12.1		0.476
D	1.5	1.6	0.059	0.063
D1	1.5		0.059	
E	1.65	1.85	0.065	0.073
F	7.4	7.6	0.291	0.299
K0	2.55	2.75	0.100	0.108
P0	3.9	4.1	0.153	0.161
P1	7.9	8.1	0.311	0.319
P2	1.9	2.1	0.075	0.082
R	40		1.574	
W	15.7	16.3	0.618	0.641

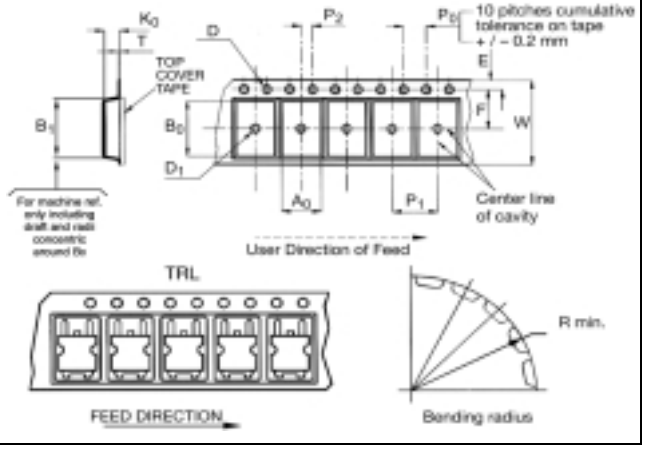

Table 10: Revision History

Date	Revision	Description of Changes
20-Aug-2004	1	New datasheet
09-Jun-2005	2	Modified title

Information furnished is believed to be accurate and reliable. However, STMicroelectronics assumes no responsibility for the consequences of use of such information nor for any infringement of patents or other rights of third parties which may result from its use. No license is granted by implication or otherwise under any patent or patent rights of STMicroelectronics. Specifications mentioned in this publication are subject to change without notice. This publication supersedes and replaces all information previously supplied. STMicroelectronics products are not authorized for use as critical components in life support devices or systems without express written approval of STMicroelectronics.

The ST logo is a registered trademark of STMicroelectronics

All other names are the property of their respective owners

© 2005 STMicroelectronics - All Rights Reserved

STMicroelectronics group of companies

Australia - Belgium - Brazil - Canada - China - Czech Republic - Finland - France - Germany - Hong Kong - India - Israel - Italy - Japan - Malaysia - Malta - Morocco - Singapore - Spain - Sweden - Switzerland - United Kingdom - United States of America