STEVAL-STWINMAV1

Data brief

Analog microphone array expansion for the SensorTile Wireless Industrial Node (STWIN) kit

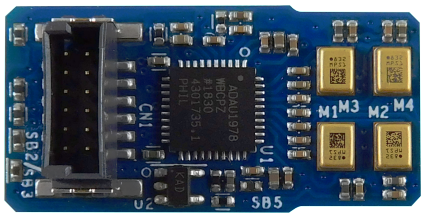

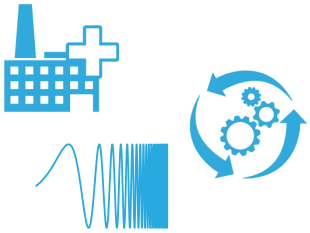

Features

- Analog microphone array expansion for STWIN (STEVAL-STWINKT1)
- Connects to STWIN core system board through dedicated 12-pin connector
- 3 V to 5.5 V power supply input
- 4 mm square-shaped differential microphone array
- 4x MP23ABS1 high-performance, single-ended, analog, bottom-port MEMS microphones
- LDK130 300 mA low quiescent current very low noise LDO
- On-board audio-grade quad ADC
- Serial Audio Interface (SAI) digital output

Description

The STEVAL-STWINMAV1 microphone array expansion adds advanced audio sensing capabilities to the STEVAL-STWINKT1 SensorTile Wireless Industrial Node (STWIN) kit for high frequency vibration monitoring applications.

The board includes four low-power, high signal-to-noise ratio (SNR) MP23ABS1 capacitive sensing microphones, supported by a very low drop voltage, low quiescent current and low-noise voltage regulator ideal for batter-powered applications such as STWIN.

The expansion board is connected via a dedicated 12-pin connector to the core system board, which runs the STSW-STWINKT01 firmware with dedicated BSP drivers and application examples for you to test and develop vibration monitoring in the ultrasound frequency ranges.

Product summary	
Analog microphone array expansion for STWIN kit	STEVAL-STWINMAV1
MEMS analog bottom-port microphone	MP23ABS1
STWIN SensorTile Wireless Industrial Node development kit	STEVAL-STWINKT1
Firmware for STEVAL-STWINKT1 evaluation kit	STSW-STWINKT01

1 Schematic diagrams

Figure 1. STEVAL-STWINMAV1 schematic - Mics, VDD and connector

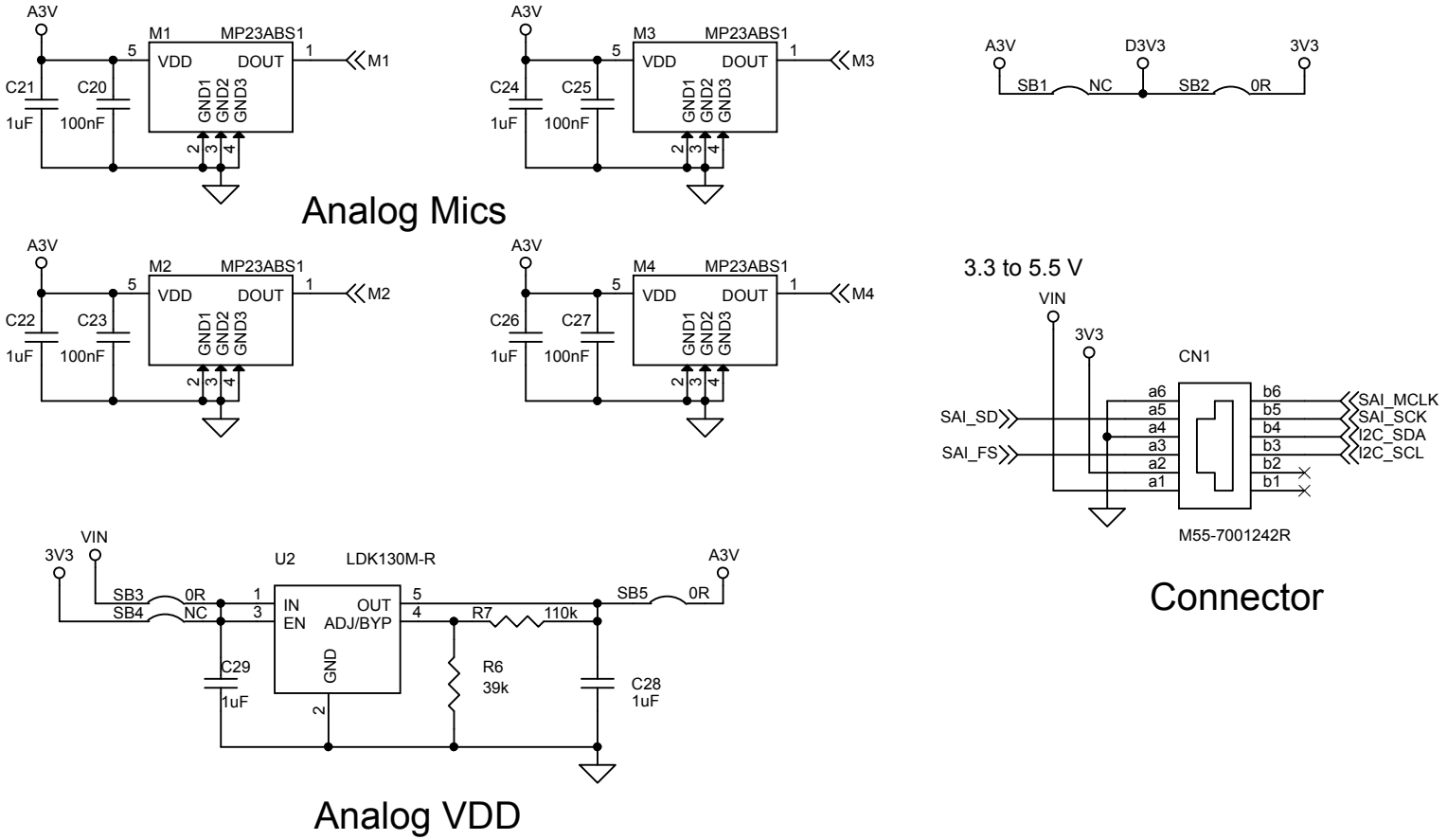

Figure 2. STEVAL-STWINMAV1 schematic - ADC

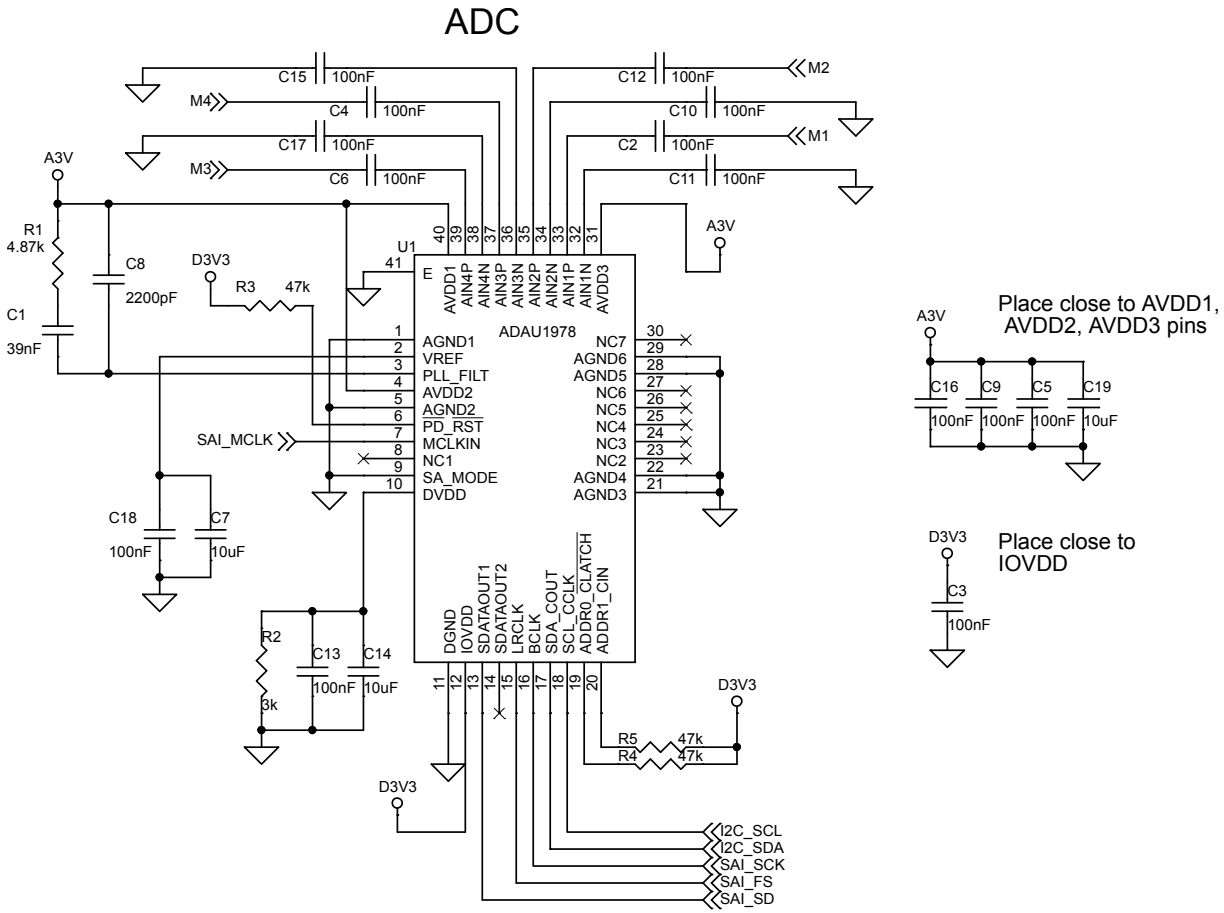

Revision history

Table 1. **Document revision history**

Date	Version	Changes
08-Jul-2019	1	Initial release.

IMPORTANT NOTICE – PLEASE READ CAREFULLY

STMicroelectronics NV and its subsidiaries (“ST”) reserve the right to make changes, corrections, enhancements, modifications, and improvements to ST products and/or to this document at any time without notice. Purchasers should obtain the latest relevant information on ST products before placing orders. ST products are sold pursuant to ST’s terms and conditions of sale in place at the time of order acknowledgement.

Purchasers are solely responsible for the choice, selection, and use of ST products and ST assumes no liability for application assistance or the design of Purchasers’ products.

No license, express or implied, to any intellectual property right is granted by ST herein.

Resale of ST products with provisions different from the information set forth herein shall void any warranty granted by ST for such product.

ST and the ST logo are trademarks of ST. For additional information about ST trademarks, please refer to www.st.com/trademarks. All other product or service names are the property of their respective owners.

Information in this document supersedes and replaces information previously supplied in any prior versions of this document.

© 2019 STMicroelectronics – All rights reserved