STEVAL-IPM15B

Data brief

1500 W motor control power board based on STGIB15CH60TS-L SLLIMM™ 2nd series IPM

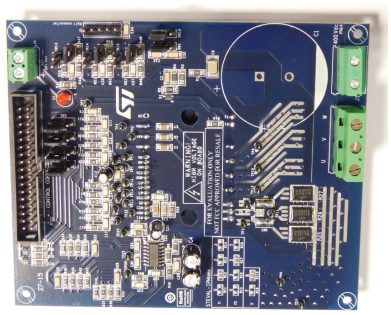

Features

- Input voltage: 125 - 400 V_{DC}
- Nominal power: up to 1500 W
- Nominal current: up to 9 A
- Input auxiliary voltage: up to 20 V DC
- Single- or three-shunt resistors for current sensing (with sensing network)
- Two options for current sensing: dedicated op-amps or through MCU
- Overcurrent hardware protection
- IPM temperature monitoring and protection
- Hall sensor or encoder input
- Uses the STGIB15CH60TS-L IGBT intelligent power module from the 2nd series of SLLIMM™ IPMs
- Motor control connector (32-pin) to interface with ST MCU boards
- Universal conception for further evaluation with breadboard and testing pins
- Very compact size

Product summary	
STEVAL-IPM15B compact motor drive power board	STEVAL-IPM15B
STGIB15CH60TS-L SLLIMM™ 2nd series IPM	STGIB15CH60TS-L

Description

The STEVAL-IPM15B is a compact motor drive power board based on the SLLIMM™ (small low-loss intelligent molded module) 2nd series module STGIB15CH60TS-L. It provides an affordable, easy-to-use solution for driving high power motors for a wide range of applications such as white goods, air conditioners, compressors, power fans, high-end power tools, and generally 3-phase inverters for motor drives. The IPM itself consists of short-circuit rugged IGBTs and a wide range of features including undervoltage lockout, smart shutdown, temperature sensing and NTC inside, and overcurrent protection. The main characteristics of this evaluation board are its small size, minimal BOM and high efficiency. It consists of an interface circuit (BUS and Vcc connectors), bootstrap capacitors, snubber capacitor, hardware short-circuit protection, fault event signal and temperature monitoring. In order to increase its flexibility, it was designed to work in single or three-shunt configuration and with double current sensing options such as three dedicated op-amps on-board, or op-amps embedded on the MCU. A Hall/Encoder part completes the circuit. Thanks to these advanced characteristics, the system has been specifically designed to achieve accurate and fast conditioning of the current feedback, matching the typical requirements for field-oriented control (FOC). The STEVAL-IPM15B is compatible with ST's STM32-based control board, providing a complete platform for motor control.

1 Schematic diagrams

Figure 1. **STEVAL-IPM15B circuit schematic (1 of 6)**

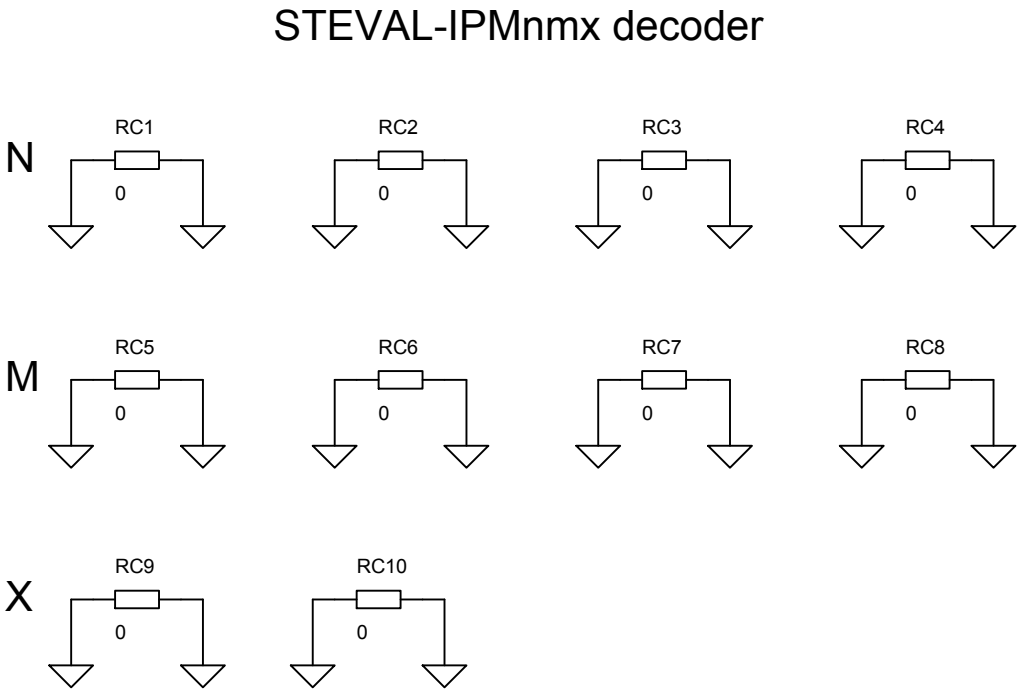

Figure 2. STEVAL-IPM15B circuit schematic (2 of 6)

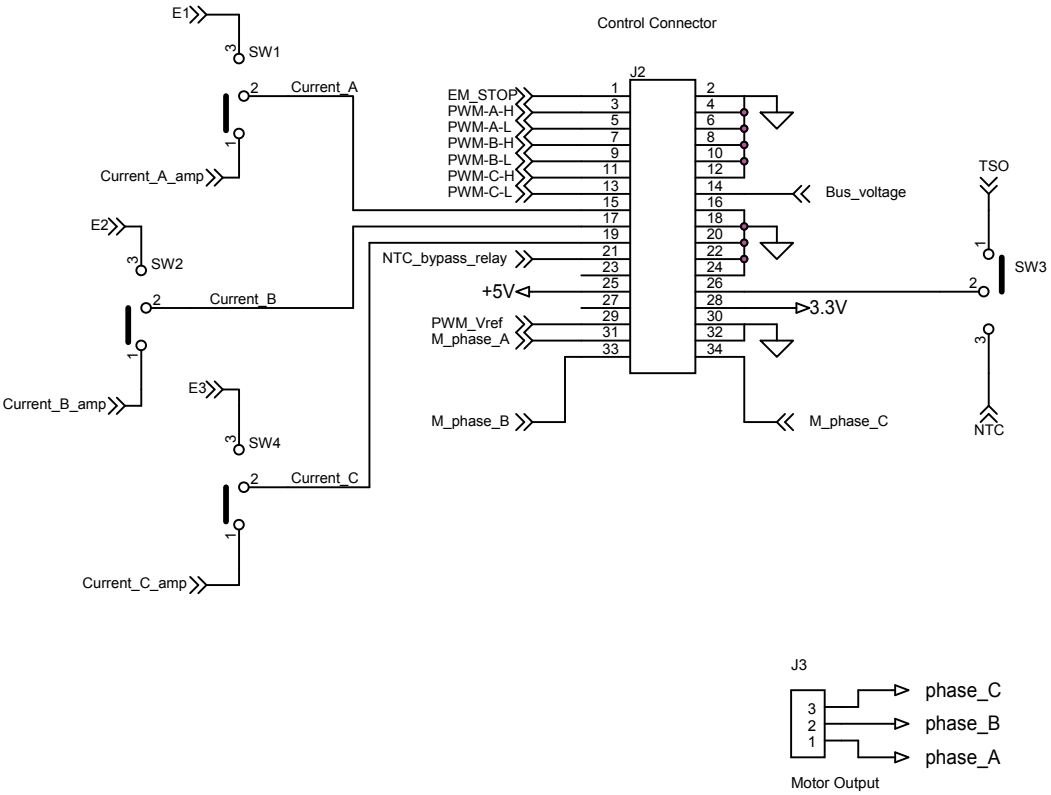

Figure 3. STEVAL-IPM15B circuit schematic (3 of 6)

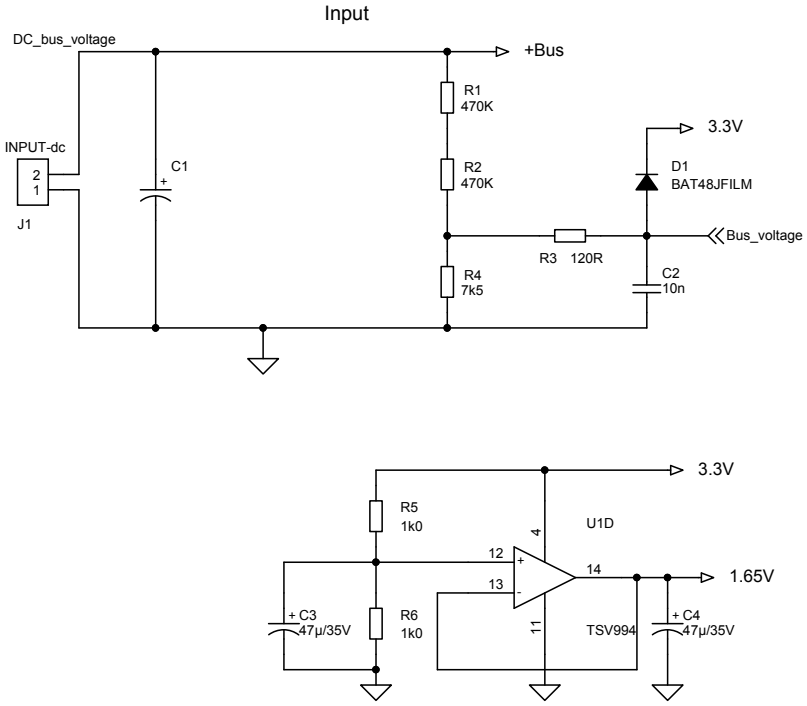

Figure 4. **STEVAL-IPM15B circuit schematic (4 of 6)**

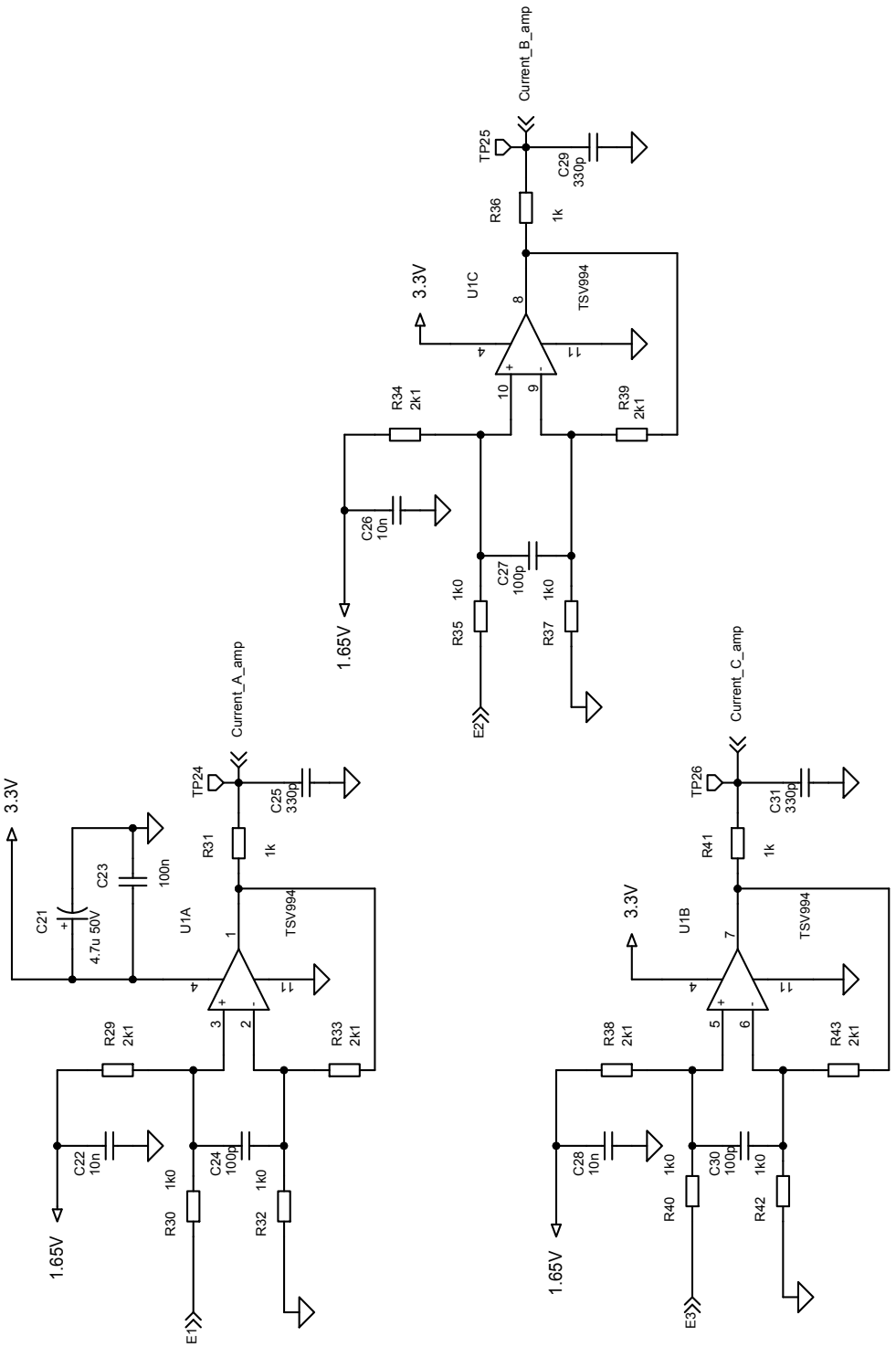

Figure 5. **STEVAL-IPM15B circuit schematic (5 of 6)**

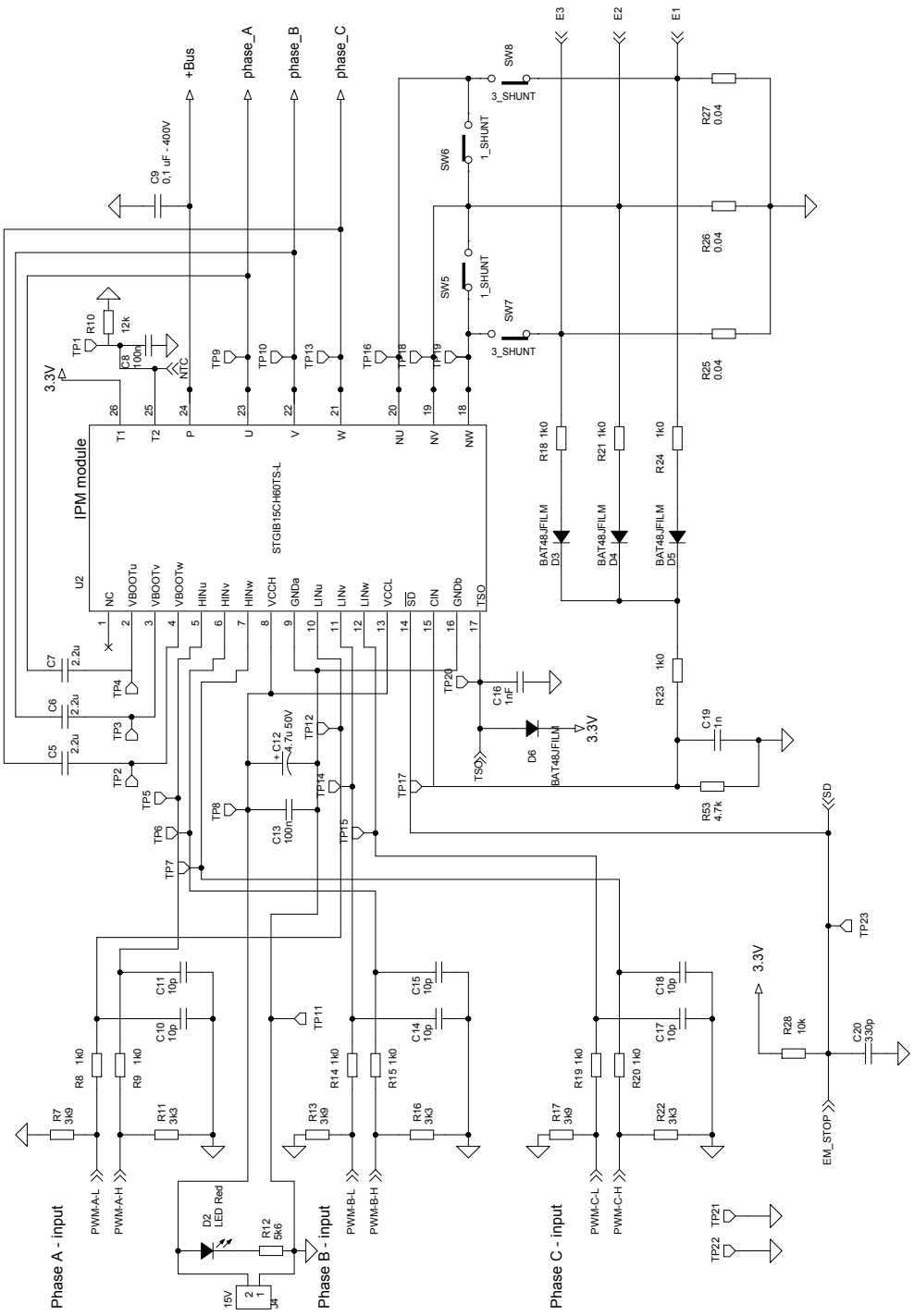

Figure 6. **STEVAL-IPM15B circuit schematic (6 of 6)**

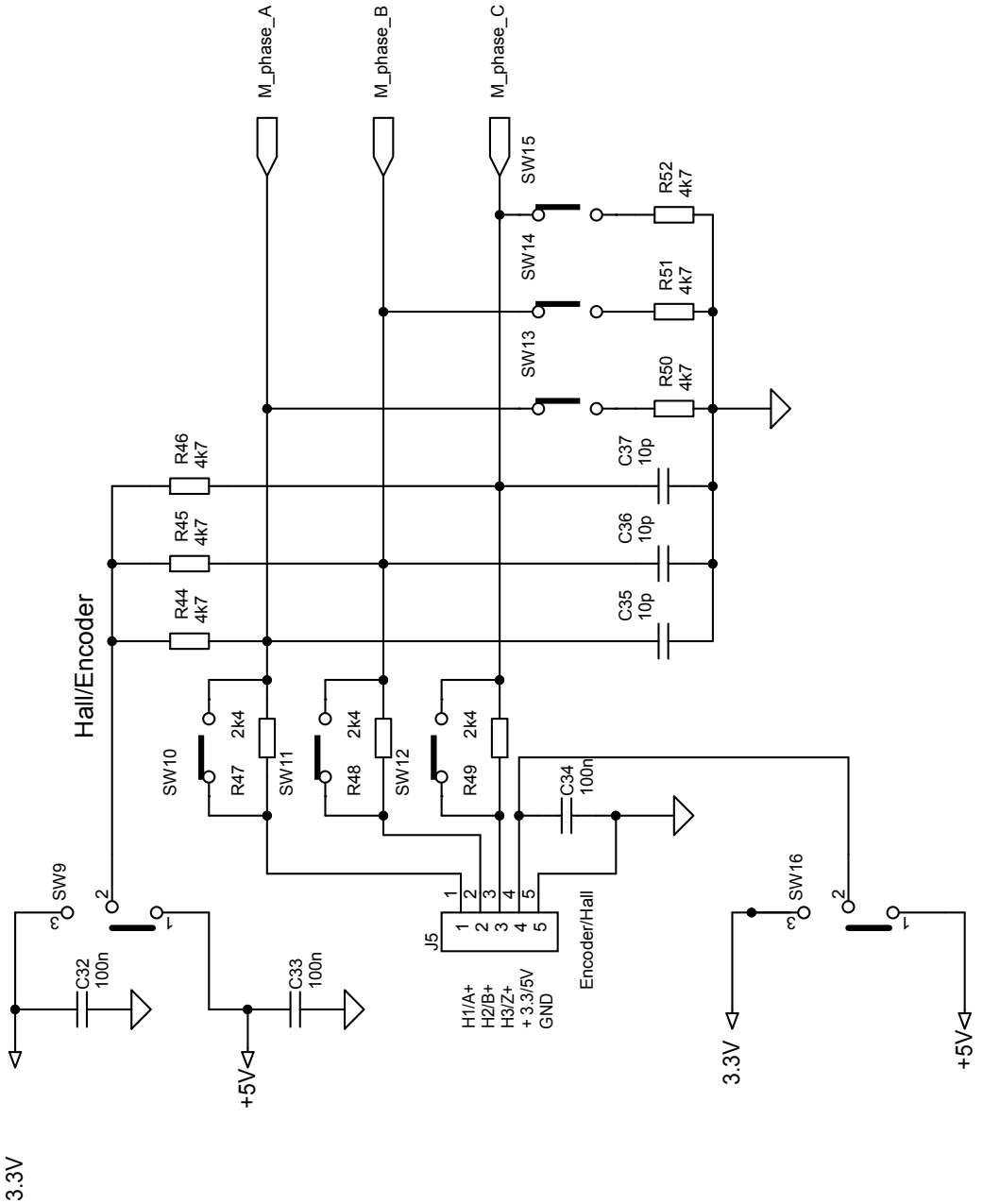

Revision history

Table 1. **Document revision history**

Date	Version	Changes
06-Nov-2015	1	Initial release.
03-Mar-2016	2	Updated: figure 1 and figure 3.
06-Apr-2018	3	Updated: title, features and figure 5.
13-Sep-2019	4	Updated: Figure 3. STEVAL-IPM15B circuit schematic (3 of 6) and Figure 4. STEVAL-IPM15B circuit schematic (4 of 6)

IMPORTANT NOTICE – PLEASE READ CAREFULLY

STMicroelectronics NV and its subsidiaries (“ST”) reserve the right to make changes, corrections, enhancements, modifications, and improvements to ST products and/or to this document at any time without notice. Purchasers should obtain the latest relevant information on ST products before placing orders. ST products are sold pursuant to ST’s terms and conditions of sale in place at the time of order acknowledgement.

Purchasers are solely responsible for the choice, selection, and use of ST products and ST assumes no liability for application assistance or the design of Purchasers’ products.

No license, express or implied, to any intellectual property right is granted by ST herein.

Resale of ST products with provisions different from the information set forth herein shall void any warranty granted by ST for such product.

ST and the ST logo are trademarks of ST. For additional information about ST trademarks, please refer to www.st.com/trademarks. All other product or service names are the property of their respective owners.

Information in this document supersedes and replaces information previously supplied in any prior versions of this document.

© 2019 STMicroelectronics – All rights reserved