STEF12S

Datasheet

Electronic fuse for 12 V line



TSOT23-8L

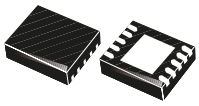

DFN10 (3x3 mm)

Features

- 15 V typical output over voltage clamp
- Absolute maximum voltage of 25 V
- Adjustable current limit
- Thermal protection
- Input under voltage lockout
- Low inrush current during Start-Up
- Integrated 40 mΩ Power FET
- En/fault pin
- Adjustable slew rate for output voltage
- Gate control pin for reverse current blocking FET (DFN10 package)
- TSOT23-8L and DFN10 (3x3 mm) packages
- Latch (STEF12S) or auto-retry (STEF12SA) versions

Applications

- Hard Disk and SSD drives
- Hard disk array
- Hot-swap board
- Hot-plug protection

Maturity status link
STEF12S

Description

The STEF12S is an integrated electronic fuse optimized for monitoring the 12 V DC power lines.

When connected in series to the main power rail, it is able to precisely detect and react to overcurrent and overvoltage conditions.

When an overload condition occurs, the device limits the output current to a safe value defined by the user. If the anomalous overload condition persists, the device goes into an open state, disconnecting the load from the power supply.

In case of overvoltage on the input, the device regulates the output to a preset safe value.

Undervoltage lockout prevents the load from malfunction, keeping the device off if the rail voltage is too low.

STEF12S features the adjustable turn-on slew-rate, which is useful to keep the in-rush current under control during startup and hot-swap operations.

On the DFN10 package a dedicated pin provides gate control for an external optional N-channel power FET, used to implement the reverse current blocking in case of input voltage loss.

The STEF05S is a companion chip for the 5 V rails, useful to implement a complete power rail control in data-storage applications.

1 Diagram

Figure 1. Block diagram

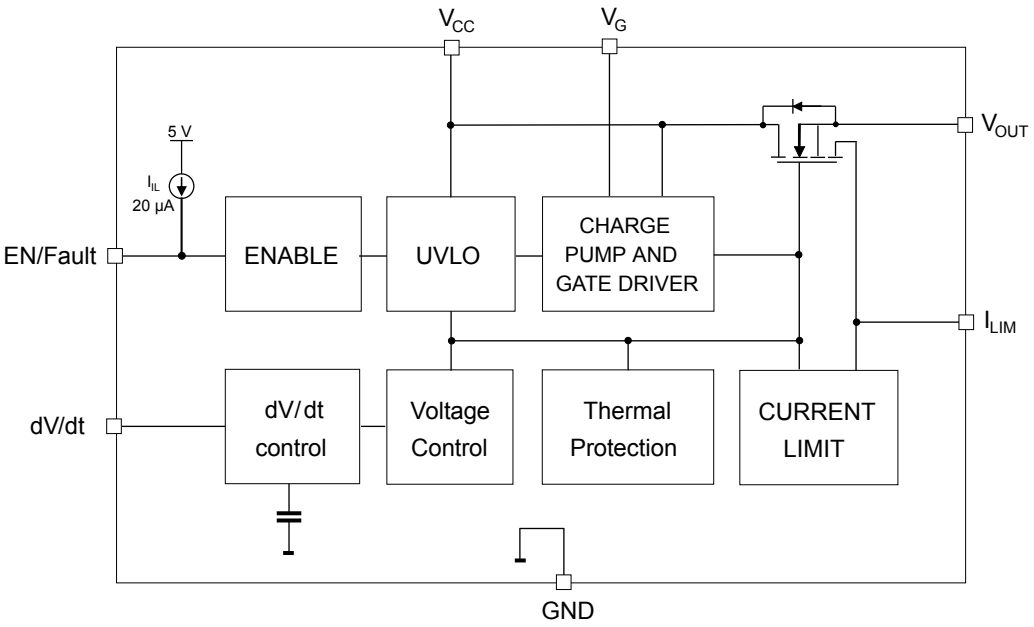

Note: Gate driver pin V_G is only available on DFN10 versions.

2 Pin configuration

Figure 2. Pin connection (top view)

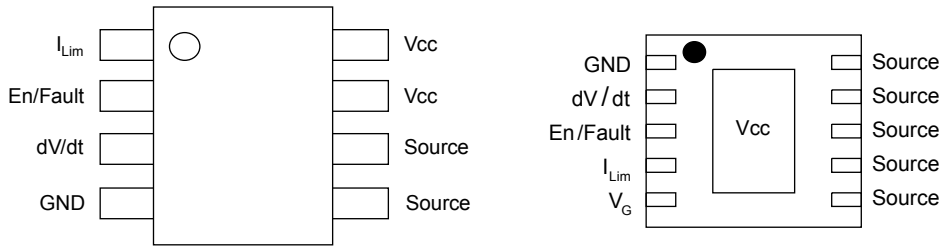

TSOT23-8L DFN10 3x3

Table 1. Pin description

Pin #		Symbol	Function
TSOT23-8L	DFN10		
1	4	I_{Lim}[1]	A R_{Lim} resistor between this pin and the Source pin sets the overload and short-circuit current limit levels.
2	3	En/Fault	The En/Fault pin is a tri-state, bi-directional interface. During normal operation the pin must be left floating, or it can be used to disable the output of the device by pulling it to ground using an open drain or open collector device. If a thermal fault occurs, the voltage on this pin goes into an intermediate state to signal a monitor circuit that the device is in thermal shutdown. It can be connected to another device of this family to cause a simultaneous shutdown during thermal events.
3	2	dV/dt	The internal dv/dt circuit controls the slew rate of the output voltage at turn-on. The internal capacitor allows a ramp-up time of around 0.85 ms. An external capacitor can be added to this pin to increase the ramp time. If an additional capacitor is not required, this pin should be left open.
4	1	GND	Ground connection.
5-6	6-10	Source/V_{OUT}	Connected to the source of the internal power MOSFET and to the output terminal of the fuse
-	5	V_G	Gate driver output for the optional external reverse-blocking Power MOS. Leave floating if not used.
7-8	Exposed pad	V_{CC}	Positive input voltage of the eFuse.

1. *Important: missing or shorted R_{Lim} causes current limit circuit malfunction and may lead to device damage.*

3 Typical application

Figure 3. **Typical application circuit**

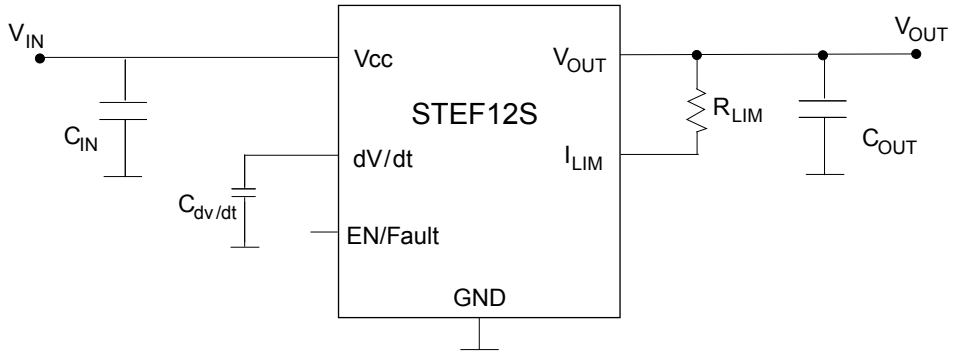

Figure 4. **Application with external reverse current blocking MOSFET**

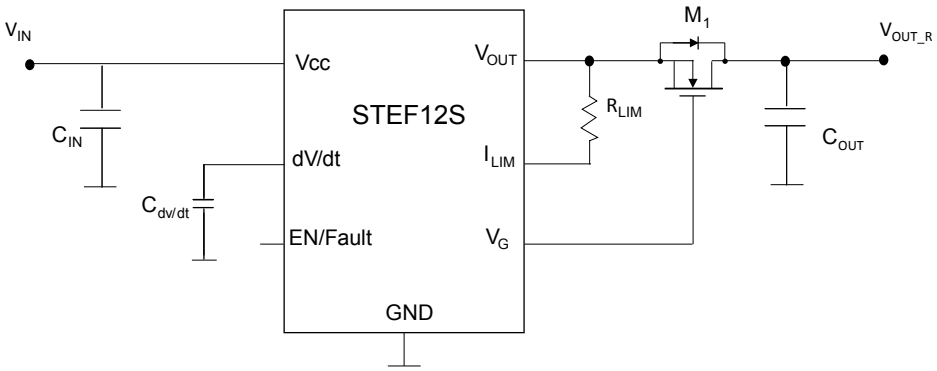

4 Maximum ratings

Table 2. Absolute maximum ratings

Symbol	Parameter	Value	Unit
V_{CC}	Positive power supply voltage	-0.3 to 25	V
V_{OUT}/source	Output voltage	-0.3 to Vcc+0.3	V
V_G	Gate driver pin voltage	-0.3 to V_{OUT} + 5	V
I_{Lim}	Current limit resistor pin voltage	-0.3 to 25	V
En/fault	En/Fault pin voltage	-0.3 to 7	V
dv/dt	dv/dt pin voltage	-0.3 to 7	V
$T_{J\text{-}OP}$	Operating junction temperature range (1)	-40 to 125	°C
T_{STG}	Storage temperature range	-65 to 150	°C
T_{LEAD}	Lead temperature (soldering) 10 s	260	°C
HBM	ESD protection - Human body model	2	kV
CDM	ESD protection - Charged device model (TSOT23-8L package)	500	V
	ESD protection - Charged device model (DFN10-3x3 package)	500	V

1. *The thermal limit is set above the maximum thermal rating. It is not recommended to operate the device at temperatures greater than the maximum ratings for extended periods of time.*

Note: Absolute maximum ratings are those values beyond which damage to the device may occur. Functional operation under these conditions is not implied. All values are referred to GND.

Table 3. Thermal data (TSOT23-8L)

Symbol	Parameter	Value	Unit
R_{thJA}	Thermal resistance junction-ambient	140	°C/W
R_{thJC}	Thermal resistance junction-case (1)	35	°C/W

1. *Based on JESD51-7, 4-layer PCB.*

Table 4. Recommended operating condition

Symbol	Parameter	Value	Unit
V_{CC}	Operating power supply voltage	10 to 13.8	V
I_D	Maximum continuous current T_A = 25°C (1)	3.5	A
C_{IN}	Suggested input capacitor	1	µF
C_{OUT}	Minimum output capacitor	1	µF
R_{Lim}	Current limit resistor range	15.4 to 300	Ω

1. *The maximum allowable power dissipation is a function of the maximum junction temperature $T_{J\text{-}OP}$ = 125°C, the junction-to-ambient thermal resistance R_{thJA}, and the ambient temperature T_A and can be estimated by: $P_{D(MAX)} = (125°C - T_A) / R_{thJA}$. Exceeding the maximum allowable power dissipation will produce overheating that may cause thermal shutdown.*

5 Electrical characteristics

V_{CC} = 12 V, $V_{En/Fault}$ = 5 V, C_I = 10 µF, C_O = 10 µF, T_J = 25 °C (unless otherwise specified).

Table 5. Electrical characteristics

Symbol	Parameter	Test conditions	Min.	Typ.	Max.	Unit
Under/Overvoltage protection						
V_{Clamp}	Average output clamping voltage	V_{CC} = 17 V	13.8	15	16.2	V
V_{UVLO}	Undervoltage lockout	Turn-on, voltage rising	7.7	8.5	9.3	V
V_{Hyst}	UVLO hysteresis			0.8		V
Power MOSFET						
t_{dly}	Delay time	Enabling of chip to soft start beginning (10 % of V_{OUT}), No $C_{dv/dt}$		250		µs
R_{DSon}	On-resistance (1)	T_J = 25 °C		40	50	mΩ
		T_J = 85 °C (2)		48		
V_{OFF}	Off state output voltage	V_{CC} = 18 V, V_{GS} = 0, R_L = infinite		1	10	mV
Current Limit						
I_{Short}	Short-circuit current limit	R_{Lim} = 22 Ω, STEF12SGR		2.8		A
I_{Lim}	Overload current limit	R_{Lim} = 22 Ω, STEF12SGR		5.5		A
I_{Short}	Short-circuit current limit	R_{Lim} = 22 Ω, STEF12SPUR		2.4		A
I_{Lim}	Overload current limit	R_{Lim} = 22 Ω, STEF12SPUR		4.6		A
I_{Short}	Short-circuit current limit	R_{Lim} = 39 Ω, STEF12SGR		1.9		A
I_{Lim}	Overload current limit	R_{Lim} = 39 Ω, STEF12SGR		3.8		A
dv/dt circuit						
dv/dt	Output voltage ramp time	From 10 % to 90 % of V_{OUT}, No Cdv/dt		0.85		ms
En/Fault						
V_{IL}	Low level input voltage	Output disabled			1.8	V
$V_{I(INT)}$	Intermediate level input voltage	Thermal fault, output disabled	1.2	1.3	1.45	V
V_{IH}	High level input voltage	Output enabled	2.5			V
$V_{I(MAX)}$	High state maximum voltage			4.9		V
I_{IL}	Low level input current (sink)	$V_{En/Fault}$ = 0 V		-20	-50	µA
I_I	High level leakage current for external switch	$V_{En/Fault}$ = 5 V			1	µA
	Maximum fan-out for fault signal	Total numbers of chips that can be connected to this pin for simultaneous shutdown			3	Units
Current consumption						
I_{Bias}	Bias current	Device operational		0.37		mA
		Thermal shutdown (2)		0.16		
		Off mode, $V_{En/Fault}$ = 0 V		0.12		
External MOSFET gate driver (DFN10 Package only)						

Symbol	Parameter	Test conditions	Min.	Typ.	Max.	Unit
I_G	Sourcing current	Device On		30		µA
I_P	Pull down current	$V_{En/fault}$ = 0 V		8		mA
V_G	Gate driver voltage	V_G - V_{OUT}		5		V
Thermal protection						
T_{SHDN}	Thermal shutdown			165		°C
	Hysteresis			20		

1. *Pulsed test.*
2. *Guaranteedby design and correlation but not tested in production.*

6 Application information

6.1 Turn-on and soft startup feature

When the input voltage is applied, the En/Fault pin goes up to the high state and the internal control circuitry is enabled.

After an initial delay time of typically 250 µs, the output voltage is ramped up with a slope defined by the internal dv/dt circuitry. If no additional capacitor is connected to dv/dt pin, the ramp up time (V_{OUT} from 10% to 90%) is around 0.85 ms.

Connecting a capacitor between the Cdv/dt pin and GND allows the modification of the output voltage ramp-up time. Given the desired time interval Δt during which the output voltage goes from zero to its maximum value, the capacitance to be added on the $C_{dv/dt}$ pin can be calculated using the following theoretical formula.

$$\Delta t\,(ms) = 0.85 + C_{dv/dt}(pF) \times 0.021$$

Where $C_{dv/dt}$ is expressed in farads and the time in seconds.

Figure 5. Delay time and V_{OUT} ramp-up time

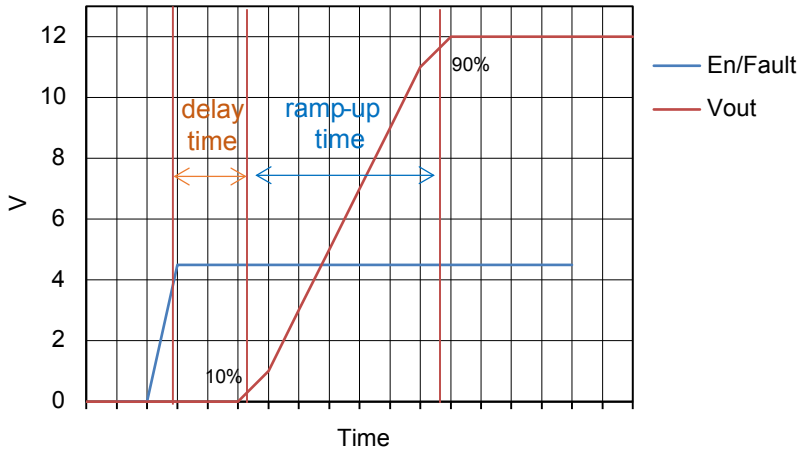

Table 6. Rise time vs. C_{dvdt}

C_{dvdt} (pF)	0	22	33	47	100	180	270	470	1000
Rise time (ms)	0.85	1.3	1.56	1.9	3	4.7	6.6	11	22

6.2 Maximum load at startup

Depending on supply voltage and load, it is possible that during startup the power dissipation is such that the maximum power protection is triggered and the output is shut down before the startup is complete. The EN/Fault signal is set according to Figure 6. En/Fault pin status. En/Fault pin behavior during thermal protection events.

In case of strong capacitive loads, the total startup time may be longer than the programmed startup time, since it is dependent also on the limitation current, the output load and the output capacitance value. In such a situation, the foldback current limit could activate, so that the startup is longer or eventually interrupted by the intervention of thermal protection. To avoid this occurrence, a longer startup time should be set by the appropriate selection of the $C_{dv/dt}$ capacitor.

6.3 Normal operating conditions

The STEF12S eFuse behaves like a mechanical fuse, supplying the circuitry on its output with the same voltage shown at its input, with a small voltage fall due to the internal N-channel MOSFET R_{DSOn}.

6.4 Output voltage clamp

This internal protection circuit clamps the output voltage to a maximum safe value, typically 15 V, if the input voltage exceeds the V_{CLAMP} threshold. In this condition the device regulates the output voltage, therefore power dissipation increases. Thermal shutdown can occur if the overvoltage persists.

6.5 Current limiting

During operation, if the load current reaches the I_{LIM} threshold, an overload is detected. The current limiting circuit reduces the conductivity of the power MOSFET, in order to clamp the output current at the I_{SHORT} value. The overload threshold and current limit can be customized by means of the limiting resistor R_{Lim} Figure 3. Typical application circuit.

As shown in Section 1 , the device uses an internal N-channel sense FET with a fixed ratio, to monitor the output current and limit it at the level set by the user.

The R_{Lim} value for achieving the requested current limitation can be selected by using the following table, together with the graph in Figure 8. I_{Lim} and I_{Short} vs. R_{Lim} - (STEF12SGR) and Figure 9. I_{Lim} and I_{Short} vs. R_{Lim} - (STEF12SPUR). Higher resistor values can be used, but due to the current limit trend shown in the before mentioned graphs, the minimum values of I_{LIM} and I_{SHORT} are asymptotically limited.

Table 7. I_{LIM} / I_{SHORT} vs. R_{Lim} STEF12SGR

R_{Lim} (Ω)	15.4	22	24.9	30	39	49.9	100	200	300
I_{LIM} (A)	8	5.5	5.1	4.4	3.8	3.2	2.4	1.7	1.5
I_{SHORT} (A)	5.1	2.8	2.6	2.3	1.9	1.5	0.8	0.4	0.3

Table 8. I_{LIM} / I_{SHORT} vs. R_{Lim} STEF12SPUR

R_{Lim} (Ω)	15.4	22	24.9	30	39	49.9	100	200	300
I_{LIM} (A)	5.9	4.6	4.4	3.8	3.2	2.8	2	1.5	1.3
I_{SHORT} (A)	3.2	2.4	2.2	1.9	1.7	1.5	0.8	0.4	0.3

Note: Missing or shorted R_{Lim} causes current limit circuit malfunction and may lead to device damage.

6.6 Thermal shutdown

If the device temperature exceeds the thermal shutdown threshold (T_{SHDN}), typically 165 °C, the power MOSFET is turned off and the load disconnected.

On the STEF12S latch version the EN/Fault pin of the device is automatically set to an intermediate voltage (typically 1.3 V), in order to signal the over temperature event to the system controller.

The device can be reset from this condition either by cycling the supply voltage or by pulling down the EN pin below the V_{il} threshold and then releasing it.

On the auto-retry version (STEF12SA), the EN/Fault pin is set to a low logic level and the auto-retry circuit attempts to restart the device with soft start once the die temperature is reduced to 145 °C typ. (165 °C minus the hysteresis value, 20 °C typ)

6.7 En/Fault pin

The EN/Fault pin has the dual function of controlling the output of the device and providing information about the device status to the application.

When it is used as a standard Enable pin, it can be connected to an external open-drain or open-collector device. In this case, when it is pulled at low logic level, it turns the output of the eFuse off.

High and low logic levels are defined as V_{IH} and V_{IL} in Table 5.

If this pin is left floating, since it has internal pull-up circuitry, the eFuse is turned ON.

Pullup current is 20 µA clamped to 5 V ($V_{I(MAX)}$).

On STEF12S (latch version), in case of thermal fault, the pin is pulled to an intermediate state ($V_{I(INT)}$) as shown in Figure 6. En/Fault pin status. This signal can be provided to a monitor circuit, informing it that a thermal shutdown has occurred, or it can be directly connected to the EN/Fault pins of other e-fuses devices on the same application in order to achieve a simultaneous enable/disable feature.

When a thermal fault occurs, the device can be reset either by cycling the supply voltage or by pulling down the Enable pin below the V_{il} threshold and then releasing it.

On the STEF12SA auto-retry version, once the thermal shutdown is triggered, the EN/Fault pin of the device is set to low state. It goes back to high level once the auto-retry occurs.

Figure 6. En/Fault pin status

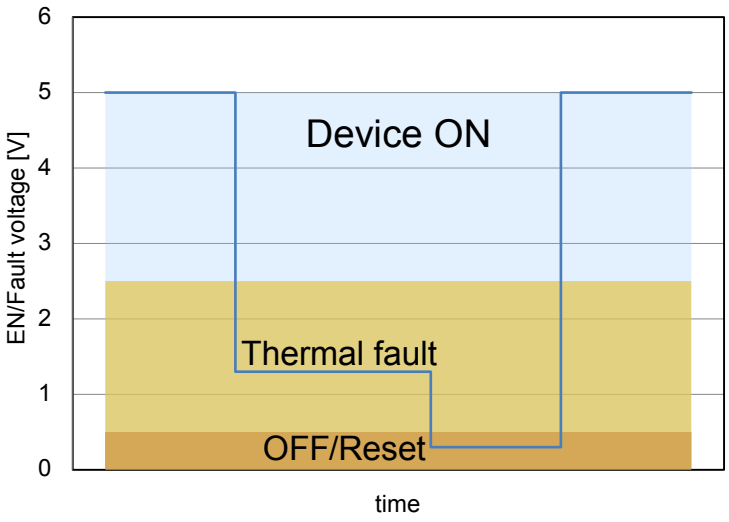

6.8 Reverse blocking function

Many applications require reverse current blocking, to allow the completion of pending system activities (such as writing the data on SSD or parking the head in HDD) in case of power loss or during brown out. The STEF12S provides a dedicated gate drive signal on the V_G pin which can be used to control an external blocking MOSFET, M1 as shown in Figure 4. Application with external reverse current blocking MOSFET. As V_{CC} drops during input power removal, the signal on Vg falls, and both the internal pass element and M1 MOSFET are turned off, therefore blocking any current flow from the Load to the input of the eFuse. By appropriate selection of C_{OUT} it is possible to guarantee the required load current to complete the power down sequence.

6.9 Application suggestions and PCB layout guidelines

Input and output capacitors are mandatory to guarantee device control loop stability and reduce the transient effects of stray inductances which may be present on the input and output power paths. In fact, when the STEF12S interrupts the current flow, input inductance generates a positive voltage spike on the input, and output inductance generates a negative voltage spike on the output.

To reduce the effects of such transients, a C_{IN} capacitor of at least 1 µF (including voltage and temperature derating) is recommended between the input pin and GND, and located as close as possible to the device.

For the same reason, a C_{OUT} capacitor of at least 1 µF (including voltage and temperature derating) must be connected at the output port.

When the device is powered by a power line made up of very long wires, the input inductance is higher than few µH, so the input capacitor should be increased in order to guarantee the proper operation of the device.

It is suggested to provide for additional protections and methods for addressing these transients, such as:

- Minimizing inductance of the input and output tracks
- TVS diodes on the input to absorb inductive spikes
- Schottky diode on the output to absorb negative spikes. The negative AMR of V_{OUT} pin is - 0.3 V (see Table 2.), nevertheless, negative transient up to - 0.6 V with a maximum duration of 50 µs are tolerated by the device. Schottky diode must be selected to satisfy the above requirements.
- Combination of ceramic and electrolytic capacitors on the input and output

PCB layout is critical for a stable and reliable operation. Refer to the typical PCB layout example shown in Figure 7. PCB layout example and to the following guidelines:

- Define the high current Input and output copper traces as short as possible and adequately sized to sustain at least the overload current
- Locate the R_{Lim} resistor close to the ILim pin and connect the other terminal of the component to V_{OUT} with the shortest possible trace. In fact, parasitic effects on the R_{Lim} connection trace can affect the current limit accuracy.
- Locate the Cdv/dt capacitor close to the dv/dt pin and connect the other terminal to GND with the shortest possible trace. Use low-leakage components for C_{dvdt}.
- The TSOT23-8L package dissipates thermal power mainly through the leads, so providing large enough copper areas around the PCB soldering pads is recommended.

Figure 7. PCB layout example

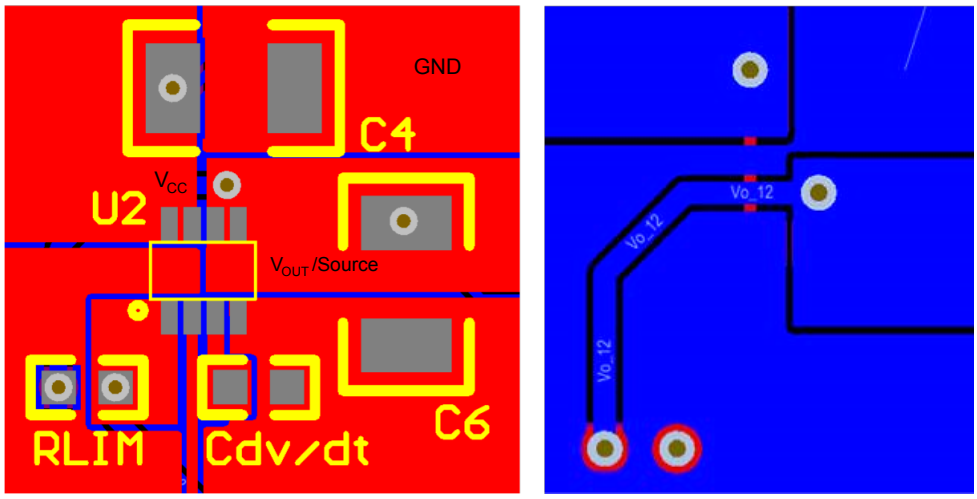

Top layer Bottom layer

7 Typical characteristics

V_{CC} = 12 V, $V_{En/Fault}$ = floating, R_{Lim} = 22 Ω, C_{OUT} = 10 µF, $C_{dV/dt}$ = floating, T_A = 25°C, unless otherwise specified.

Figure 8. I_{Lim} and I_{Short} vs. R_{Lim} - (STEF12SGR)

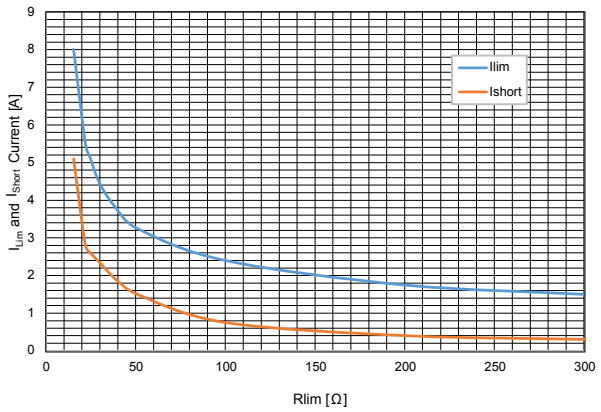

Figure 9. I_{Lim} and I_{Short} vs. R_{Lim} - (STEF12SPUR)

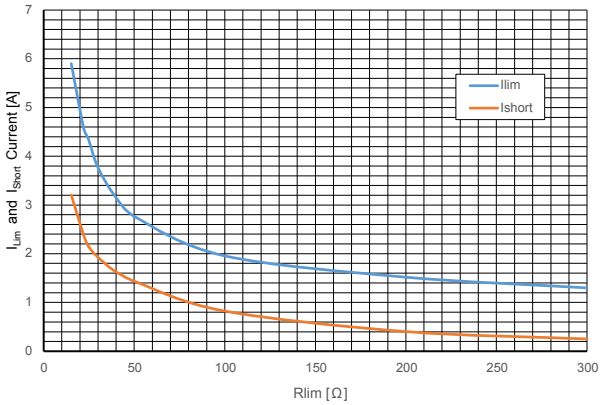

Figure 10. Bias current vs. temperature

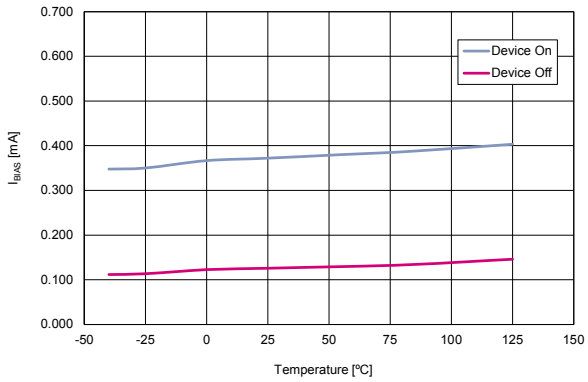

Figure 11. Bias current vs temperature (thermal shutdown)

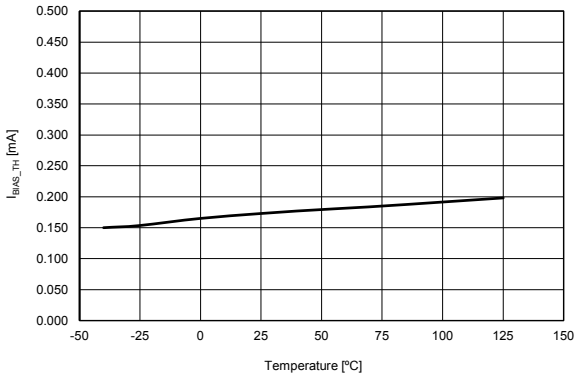

Figure 12. R_{DS_ON} vs. temperature

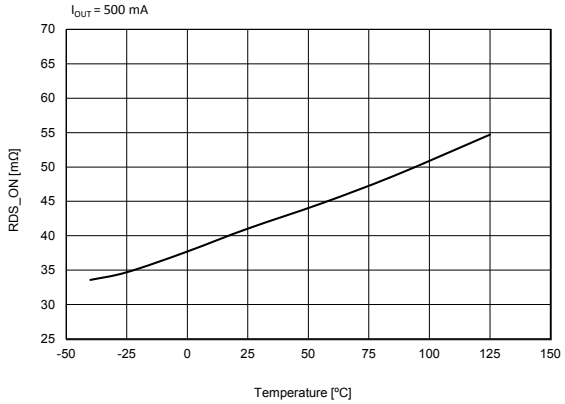

Figure 13. I_{LIM} vs. temperature

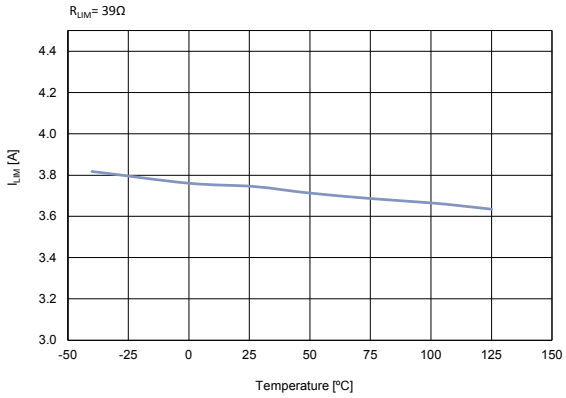

Figure 14. I_{Short} vs. temperature

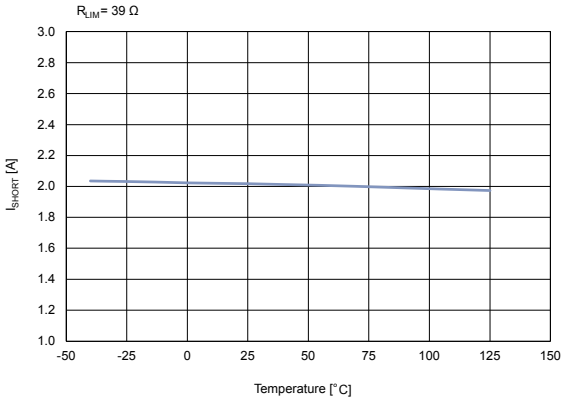

Figure 15. Clamping voltage vs. temperature

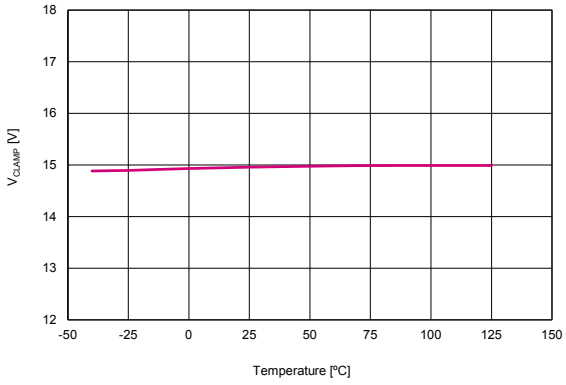

Figure 16. UVLO vs. temperature

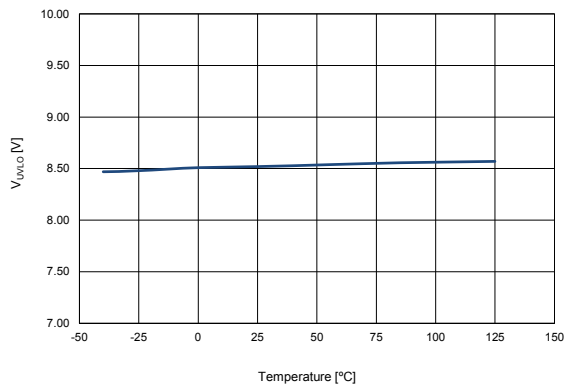

Figure 17. UVLO Hysteresis vs. temperature

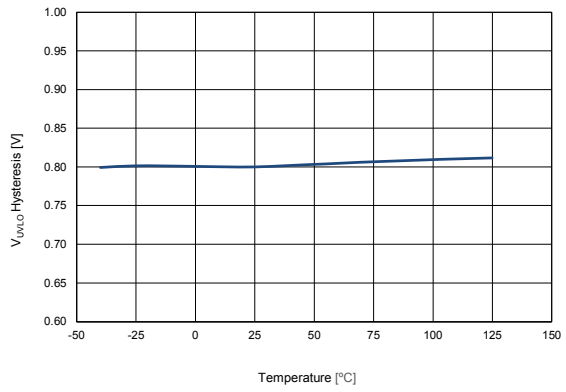

Figure 18. En/Fault pin thresholds vs. temperature

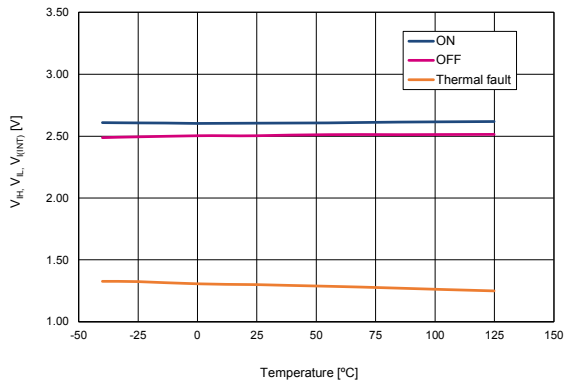

Figure 19. En/Fault pull-up voltage vs. temperature

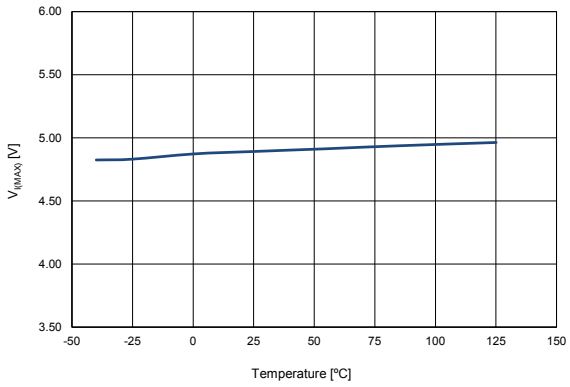

Figure 20. En/Fault pin current vs. temperature (En/Fault to GND)

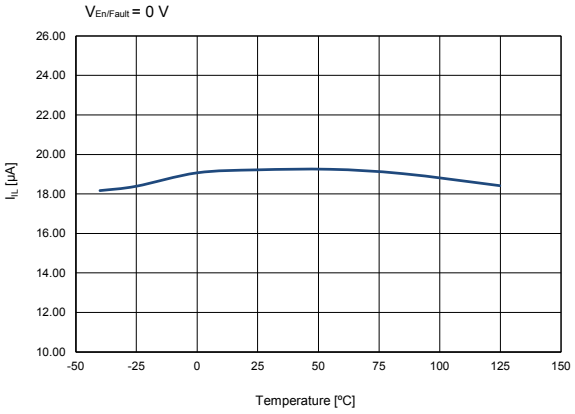

Figure 21. Soft-start time vs. temperature (no C_{dvdt})

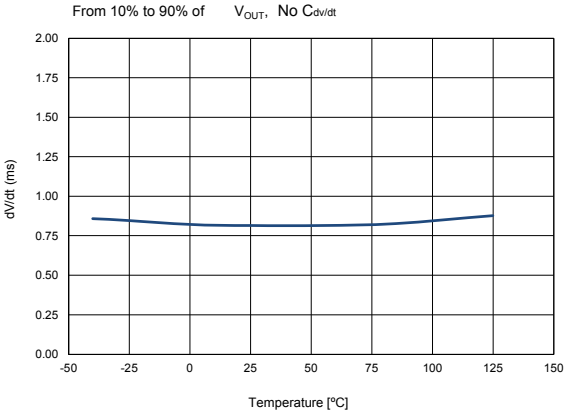

Figure 22. Start-up via input voltage (No load)

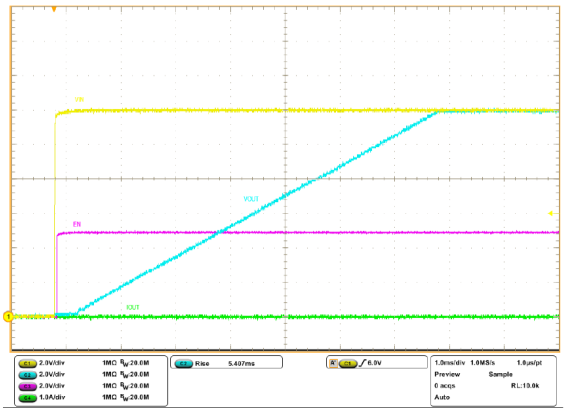

V_{IN}=from 0V to 12V, I_{OUT}= 0 mA , $C_{dV/dt}$= 220 pF, C_{IN}= 2.2 µF, C_{OUT}= 10 µF, R_{LIM} = 22Ω

Figure 23. Start-up via En/Fault pin (No load)

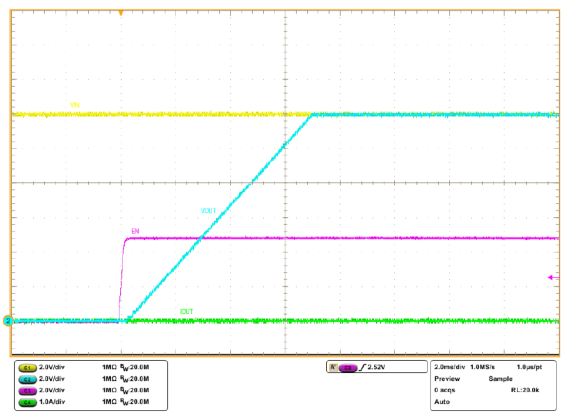

$V_{En/Fault}$=from 0V to floating, I_{OUT}= 0 mA , $C_{dV/dt}$= 220 pF, C_{IN}= 2.2 µF, C_{OUT}= 10 µF, R_{LIM} = 22Ω

Figure 24. Start-up via input voltage (5 Ω load)



V_{IN}=from 0V to 12V, R_{LOAD}= 5 Ω, $C_{dV/dt}$= 220 pF, C_{IN}= 2.2 µF, C_{OUT}= 10 µF, R_{LIM} = 22Ω

Figure 25. Start-up via Input voltage (C_{OUT} = 1500 µF)

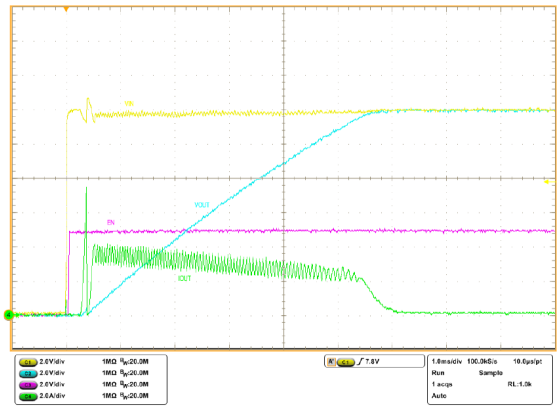

V_{IN}=from 0V to 12V, No load, $C_{dV/dt}$= 220 pF, C_{IN}= 2.2 µF, C_{OUT}= 1500 µF, R_{LIM} = 22Ω

Figure 26. Start-up into voltage clamp

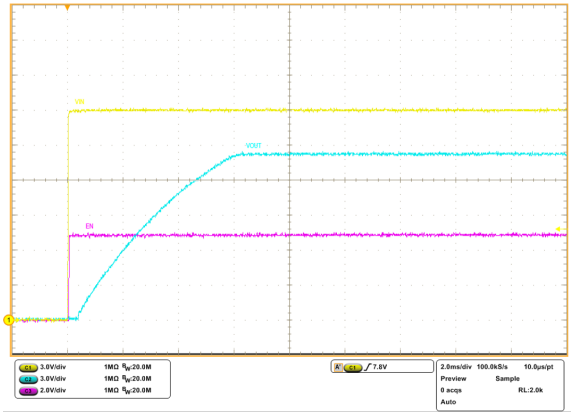

V_{IN}=from 0V to 18V, No load, $C_{dV/dt}$= 220 pF, C_{IN}= 2.2 µF, C_{OUT}= 10 µF, R_{LIM} = 22Ω

Figure 27. Voltage clamp during operation

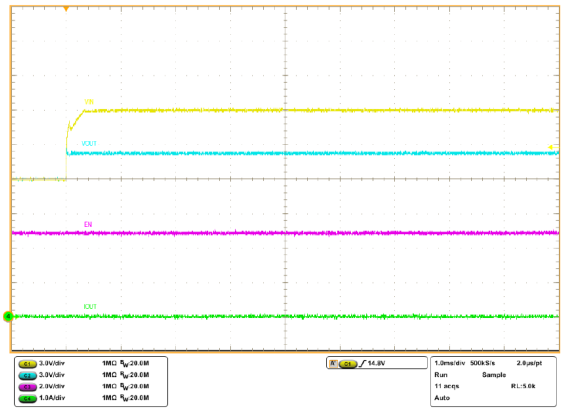

V_{IN}=from 12V to 18V, No load, $C_{dV/dt}$= 220 pF, C_{IN}= 2.2 µF, C_{OUT}= 10 µF, R_{LIM} = 22Ω

Figure 28. Start-up into output short circuit

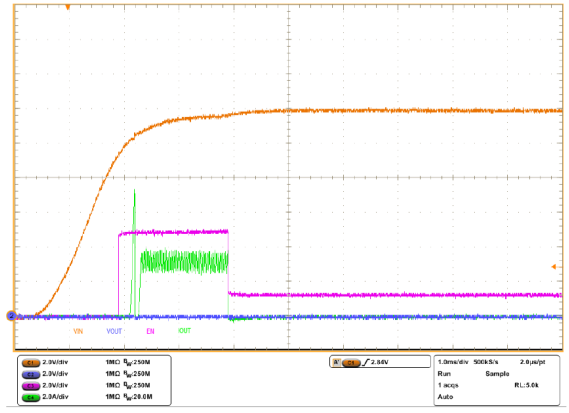

V_{IN}= 12V, V_{OUT} shorted to GND, $C_{dV/dt}$= 220 pF, C_{IN}= 2.2 µF, C_{OUT}= 10 µF, R_{LIM} = 22Ω

Figure 29. Start-up into overload

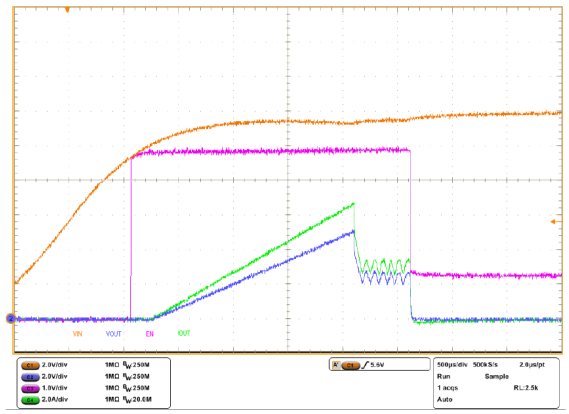

V_{IN}= 12V, R_{LOAD}= 0.75 Ω, $C_{dV/dt}$= 220 pF, C_{IN}= 2.2 µF, C_{OUT}= 10 µF, R_{LIM} = 22Ω

Figure 30. Overcurrent protection during operation

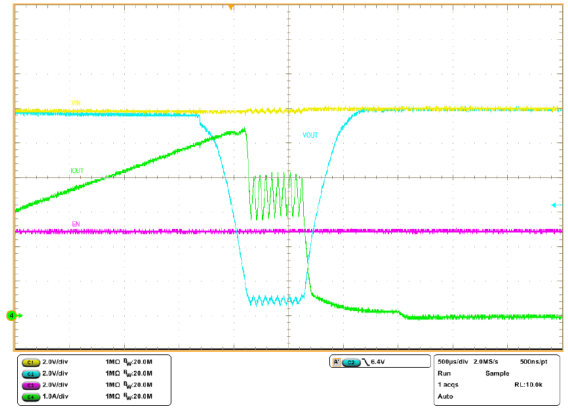

V_{IN}= 12V, I_{OUT} = from 0 to current limit, $C_{dV/dt}$= 220 pF, C_{IN}= 2.2 µF, C_{OUT}= 10 µF, R_{LIM} = 22Ω

Figure 31. Output short circuit during operation

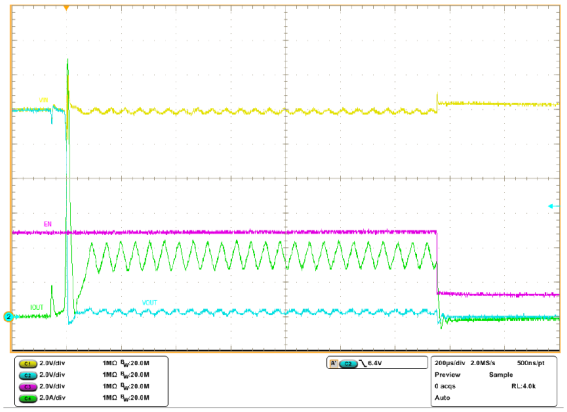

V_{IN}= 12V, V_{OUT} = from 12V to GND, $C_{dV/dt}$= 220 pF, C_{IN}= 2.2 µF, C_{OUT}= 10 µF, R_{LIM} = 22Ω

Figure 32. Thermal shutdown (latched version)

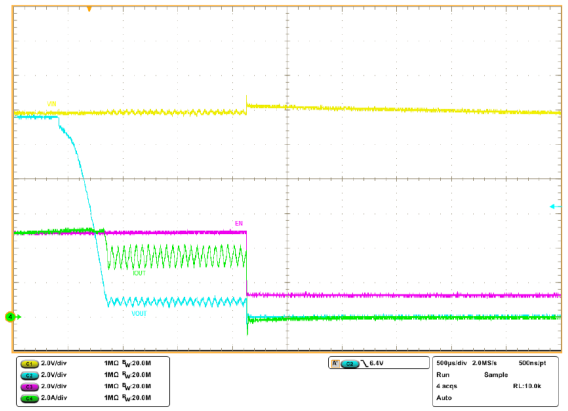

V_{IN}= 12V, $C_{dV/dt}$= 220 pF, C_{IN}= 2.2 µF, C_{OUT}= 10 µF, R_{LIM} = 22Ω

Figure 33. Thermal shutdown (auto-retry version)

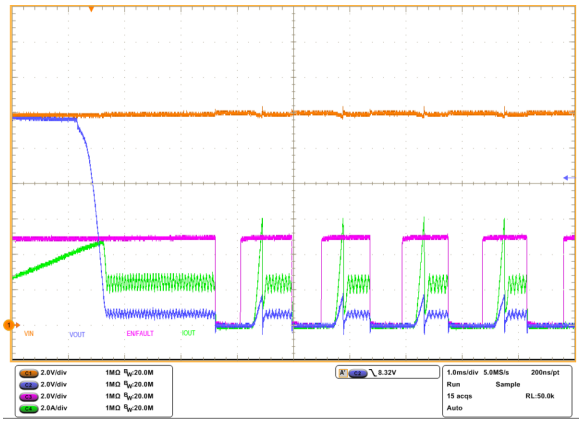

V_{IN} = 12 V, $C_{dV/dt}$ = 220 pF, C_{IN} = 2.2 µF, C_{OUT} = 10 µF, R_{LIM} = 22 Ω

8 Package information

In order to meet environmental requirements, ST offers these devices in different grades of ECOPACK packages, depending on their level of environmental compliance. ECOPACK specifications, grade definitions and product status are available at: www.st.com. ECOPACK is an ST trademark.

8.1 TSOT23-8L package information

Figure 34. TSOT23-8L package outline

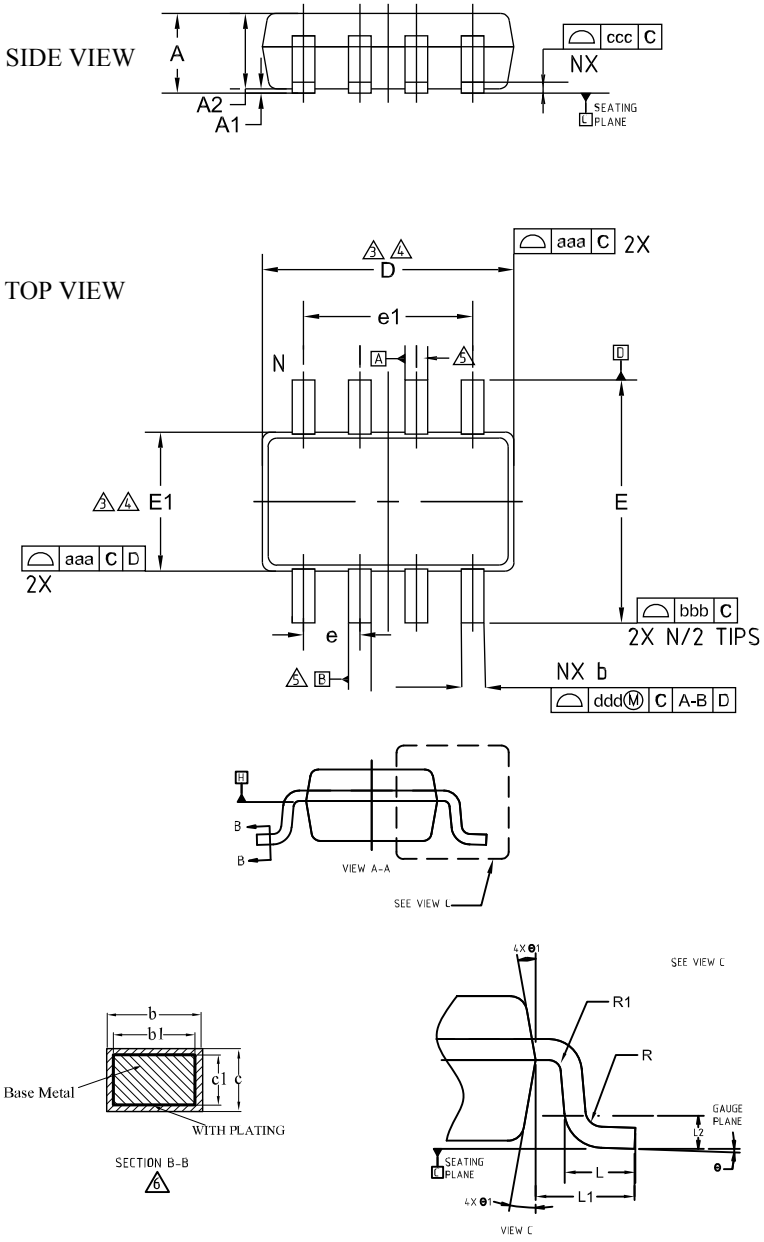

Table 9. **TSOT23-8L mechanical data**

Dim.	mm		
	Min.	Typ.	Max.
A			1
A1	0.01	0.05	0.1
A2	0.84	0.87	0.9
b	0.22	-	0.36
b1	0.22	0.26	0.3
c	0.12	0.15	0.2
c1	0.08	0.13	0.16
D	-	2.90 BSC	-
E	-	2.80 BSC	-
E1	-	1.60 BSC	-
e	-	0.65 BSC	-
e1	-	1.95 BSC	-
L	0.3	0.4	0.5
L1	-	0.60 BSC	-
L2	-	0.25 BSC	-
R	0.1	-	-
R1	0.1	-	0.25
Θ	0	4°	8°
Θ1	4°	10°	12°
Tolerance of form and position			
aaa	0.15		
bbb	0.25		
ccc	0.1		
ddd	0.13		
N	8		
ND	4		

Figure 35. **TSOT23-8L recommended footprint**

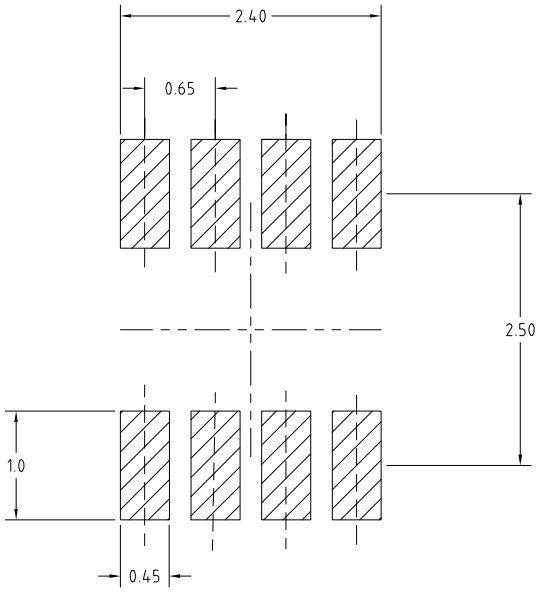

8.2 DFN10 (3 x 3 mm) package information

Figure 36. **DFN10 (3 x 3 mm) package outline**

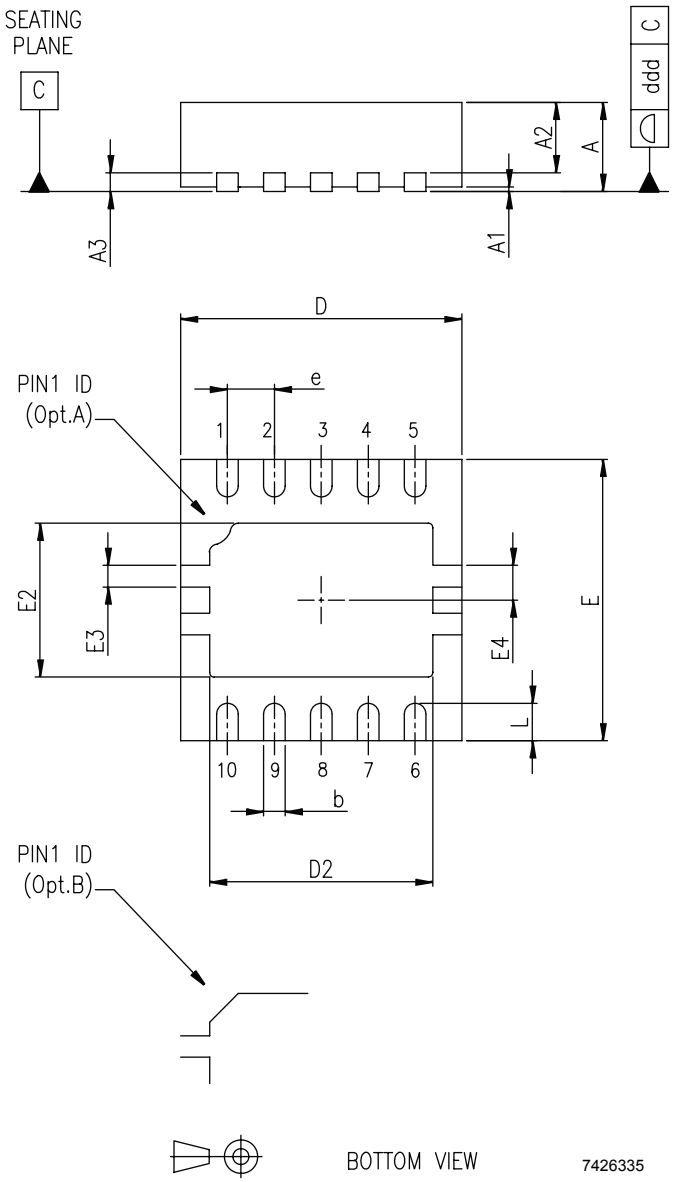

Table 10. **DFN10 (3 x 3 mm) mechanical data**

Dim.	mm		
	Min.	Typ.	Max.
A	0.80	0.90	1.00
A1		0.02	
A2		0.70	
A3		0.20	
b	0.18	0.23	0.30
D	2.85	3.00	3.15
D2	2.23	2.38	2.52
E	2.85	3.00	3.15
E2	1.49	1.64	1.75
E3	0.230		
E4	0.365		
e		0.50	
L	0.30	0.40	0.50
ddd			0.08

Figure 37. **DFN10 (3 x 3 mm) recommended footprint**

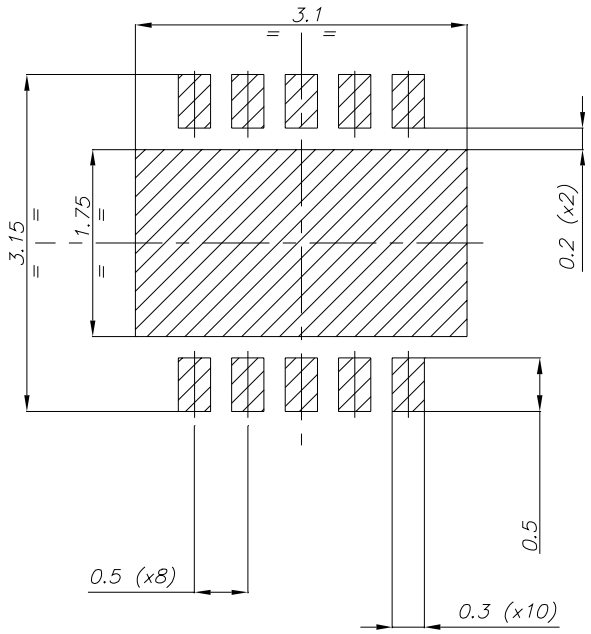

9 Ordering information

Table 11. **Order codes**

Order code	Package	Packaging	Marking	Thermal protection
STEF12SGR	TSOT23-8	Tape and reel	12SL	Latch-off
STEF12SPUR	DFN10-3x3	Tape and reel	12SL	Latch-off
STEF12SAPUR	DFN10-3x3	Tape and reel	12HA	Autoretry

Revision history

Table 12. **Document revision history**

Date	Revision	Changes
17-Dec-2019	1	Initial release.
29-May-2020	2	Updated Figure 1, $V_{I(INT)}$ max. value in Table 5, Section 6.7 En/Fault pin, Section 6.9 Application suggestions and PCB layout guidelines and Figure 33. Added row R_{Lim} parameter in Table 4 and new order code STEF12SAPUR in Table 11.

Contents

1 **Diagram** 2
2 **Pin configuration** 3
3 **Typical application** 4
4 **Maximum ratings** 5
5 **Electrical characteristics** 6
6 **Application information** 8
6.1 Turn-on and soft startup feature 8
6.2 Maximum load at startup 8
6.3 Normal operating conditions 9
6.4 Output voltage clamp 9
6.5 Current limiting 9
6.6 Thermal shutdown 9
6.7 En/Fault pin 10
6.8 Reverse blocking function 10
6.9 Application suggestions and PCB layout guidelines 10
7 **Typical characteristics** 12
8 **Package information** 17
8.1 TSOT23-8L package information 17
8.2 DFN10 (3 x 3 mm) package information 20
9 **Ordering information** 22
Revision history 23

List of tables

Table 1. Pin description . . . 3
Table 2. Absolute maximum ratings . . . 5
Table 3. Thermal data (TSOT23-8L) . . . 5
Table 4. Recommended operating condition . . . 5
Table 5. Electrical characteristics . . . 6
Table 6. Rise time vs. C_{dvdt} . . . 8
Table 7. I_{LIM} / I_{SHORT} vs. R_{Lim} STEF12SGR . . . 9
Table 8. I_{LIM} / I_{SHORT} vs. R_{Lim} STEF12SPUR . . . 9
Table 9. TSOT23-8L mechanical data . . . 18
Table 10. DFN10 (3 x 3 mm) mechanical data . . . 21
Table 11. Order codes . . . 22
Table 12. Document revision history . . . 23

List of figures

Figure 1. Block diagram . . . 2
Figure 2. Pin connection (top view) . . . 3
Figure 3. Typical application circuit . . . 4
Figure 4. Application with external reverse current blocking MOSFET . . . 4
Figure 5. Delay time and V_{OUT} ramp-up time . . . 8
Figure 6. En/Fault pin status . . . 10
Figure 7. PCB layout example . . . 11
Figure 8. I_{Lim} and I_{Short} vs. R_{Lim} - (STEF12SGR) . . . 12
Figure 9. I_{Lim} and I_{Short} vs. R_{Lim} - (STEF12SPUR) . . . 12
Figure 10. Bias current vs. temperature . . . 12
Figure 11. Bias current vs temperature (thermal shutdown) . . . 12
Figure 12. R_{DS_ON} vs. temperature . . . 13
Figure 13. I_{LIM} vs. temperature . . . 13
Figure 14. I_{Short} vs. temperature . . . 13
Figure 15. Clamping voltage vs. temperature . . . 13
Figure 16. UVLO vs. temperature . . . 13
Figure 17. UVLO Hysteresis vs. temperature . . . 13
Figure 18. En/Fault pin thresholds vs. temperature . . . 14
Figure 19. En/Fault pull-up voltage vs. temperature . . . 14
Figure 20. En/Fault pin current vs. temperature (En/Fault to GND) . . . 14
Figure 21. Soft-start time vs. temperature (no C_{dvdt}) . . . 14
Figure 22. Start-up via input voltage (No load) . . . 14
Figure 23. Start-up via En/Fault pin (No load) . . . 14
Figure 24. Start-up via input voltage (5 Ω load) . . . 15
Figure 25. Start-up via Input voltage (C_{OUT} = 1500 µF) . . . 15
Figure 26. Start-up into voltage clamp . . . 15
Figure 27. Voltage clamp during operation . . . 15
Figure 28. Start-up into output short circuit . . . 15
Figure 29. Start-up into overload . . . 15
Figure 30. Overcurrent protection during operation . . . 16
Figure 31. Output short circuit during operation . . . 16
Figure 32. Thermal shutdown (latched version) . . . 16
Figure 33. Thermal shutdown (auto-retry version) . . . 16
Figure 34. TSOT23-8L package outline . . . 17
Figure 35. TSOT23-8L recommended footprint . . . 19
Figure 36. DFN10 (3 x 3 mm) package outline . . . 20
Figure 37. DFN10 (3 x 3 mm) recommended footprint . . . 21

IMPORTANT NOTICE – PLEASE READ CAREFULLY

STMicroelectronics NV and its subsidiaries (“ST”) reserve the right to make changes, corrections, enhancements, modifications, and improvements to ST products and/or to this document at any time without notice. Purchasers should obtain the latest relevant information on ST products before placing orders. ST products are sold pursuant to ST’s terms and conditions of sale in place at the time of order acknowledgement.

Purchasers are solely responsible for the choice, selection, and use of ST products and ST assumes no liability for application assistance or the design of Purchasers’ products.

No license, express or implied, to any intellectual property right is granted by ST herein.

Resale of ST products with provisions different from the information set forth herein shall void any warranty granted by ST for such product.

ST and the ST logo are trademarks of ST. For additional information about ST trademarks, please refer to www.st.com/trademarks. All other product or service names are the property of their respective owners.

Information in this document supersedes and replaces information previously supplied in any prior versions of this document.

© 2020 STMicroelectronics – All rights reserved