STD40NF02L

N-CHANNEL 20V - 0.01 Ω - 40A DPAK
LOW GATE CHARGE STripFET™ POWER MOSFET

TARGET DATA

TYPE	V_{DSS}	$R_{DS(on)}$	I_D
STD40NF02L	20 V	< 0.013 Ω	40 A

- TYPICAL $R_{DS(on)}$ = 0.01 Ω
- TYPICAL Q_g = 35 nC @ 10V
- OPTIMAL $R_{DS(on)}$ x Q_g TRADE-OFF
- CONDUCTION LOSSES REDUCED
- SWITCHING LOSSES REDUCED

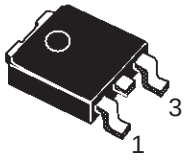

DPAK
TO-252
(Suffix "T4")

ADD SUFFIX "T4" FOR ORDERING IN TAPE & REEL

DESCRIPTION

This application specific Power Mosfet is the third generation of STMicroelectronics unique "Single Feature Size™" strip-based process. The resulting transistor shows the best trade-off between on-resistance and gate charge. When used as high and low side in buck regulators, it gives the best performance in terms of both conduction and switching losses. This is extremely important for motherboards where fast switching and high efficiency are of paramount importance.

APPLICATIONS

- SPECIFICALLY DESIGNED AND OPTIMISED FOR HIGH EFFICIENCY CPU CORE DC/DC CONVERTERS

INTERNAL SCHEMATIC DIAGRAM

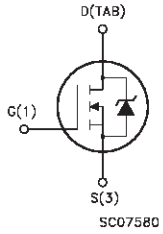

ABSOLUTE MAXIMUM RATINGS

Symbol	Parameter	Value	Unit
V_{DS}	Drain-source Voltage (V_{GS} = 0)	20	V
V_{DGR}	Drain- gate Voltage (R_{GS} = 20 kΩ)	20	V
V_{GS}	Gate-source Voltage	± 20	V
I_D(•)	Drain Current (continuous) at T_c = 25 °C	20	A
I_D(•)	Drain Current (continuous) at T_c = 100 °C	20	A
I_{DM}(••)	Drain Current (pulsed)	80	A
P_{tot}	Total Dissipation at T_c = 25 °C	55	W
	Derating Factor	0.37	W/°C
T_{stg}	Storage Temperature	-65 to 175	°C
T_j	Max. Operating Junction Temperature	175	°C

(•) Current Limited By The Package
(••) Pulse width limited by safe operating area

THERMAL DATA

$R_{thj\text{-}case}$	Thermal Resistance Junction-case Max	2.73	$^oC/W$
$R_{thj\text{-}amb}$	Thermal Resistance Junction-ambient Max	62.5	$^oC/W$
T_l	Maximum Lead Temperature For Soldering Purpose	300	^oC

ELECTRICAL CHARACTERISTICS (T_{case} = 25 ^oC unless otherwise specified)

OFF

Symbol	Parameter	Test Conditions	Min.	Typ.	Max.	Unit
$V_{(BR)DSS}$	Drain-source Breakdown Voltage	I_D = 250 µA V_{GS} = 0	20			V
I_{DSS}	Zero Gate Voltage Drain Current (V_{GS} = 0) V_{DS} = Max Rating V_{DS} = Max Rating T_c =125 ^oC				1 10	µA µA
I_{GSS}	Gate-body Leakage Current (V_{DS} = 0)	V_{GS} = ± 20 V			± 100	nA

ON (*)

Symbol	Parameter	Test Conditions	Min.	Typ.	Max.	Unit
$V_{GS(th)}$	Gate Threshold Voltage	V_{DS} = V_{GS} I_D = 250 µA	1		2.5	V
$R_{DS(on)}$	Static Drain-source On Resistance	V_{GS} = 10V I_D = 20 A V_{GS} = 5V I_D = 20 A		0.01 0.015	0.013 0.019	Ω Ω
$I_{D(on)}$	On State Drain Current	V_{DS} > $I_{D(on)}$ x $R_{DS(on)max}$ V_{GS} = 10 V	20			A

DYNAMIC

Symbol	Parameter	Test Conditions	Min.	Typ.	Max.	Unit
g_{fs} (*)	Forward Transconductance	V_{DS} > $I_{D(on)}$ x $R_{DS(on)max}$ I_D =20 A		40		S
C_{iss} C_{oss} C_{rss}	Input Capacitance Output Capacitance Reverse Transfer Capacitance	V_{DS} = 25 V f = 1 MHz V_{GS} = 0		1500 900 200		pF pF pF

ELECTRICAL CHARACTERISTICS (continued)

SWITCHING ON

Symbol	Parameter	Test Conditions	Min.	Typ.	Max.	Unit
$t_{d(on)}$ t_r	Turn-on Delay Time Rise Time	V_{DD} = 15 V I_D = 20 A R_G = 4.7 Ω V_{GS} = 4.5 V (Resistive Load, see fig. 3)		20 170		ns ns
Q_g Q_{gs} Q_{gd}	Total Gate Charge Gate-Source Charge Gate-Drain Charge	V_{DD} = 16 V I_D = 20 A V_{GS} = 10 V		36 5 10	45	nC nC nC

SWITCHING OFF

Symbol	Parameter	Test Conditions	Min.	Typ.	Max.	Unit
$t_{d(off)}$ t_f	Turn-off Delay Time Fall Time	V_{DD} = 15 V I_D = 20 A R_G = 4.7 Ω V_{GS} = 4.5 V (Resistive Load, see fig. 3)		40 60		ns ns

SOURCE DRAIN DIODE

Symbol	Parameter	Test Conditions	Min.	Typ.	Max.	Unit
I_{SD} I_{SDM}(•)	Source-drain Current Source-drain Current (pulsed)				20 80	A A
V_{SD} (∗)	Forward On Voltage	I_{SD} =20 A V_{GS} = 0			1.2	V
t_{rr} Q_{rr} I_{RRM}	Reverse Recovery Time Reverse Recovery Charge Reverse Recovery Current	I_{SD} = 20 A di/dt = 100 A/µs V_{DD} = 15 V T_j = 150 °C (see test circuit, fig. 5)		T.B.D		ns µC A

(∗) Pulsed: Pulse duration = 300 µs, duty cycle 1.5 %

(•) Pulse width limited by safe operating area

Fig. 1: Unclamped Inductive Load Test Circuit

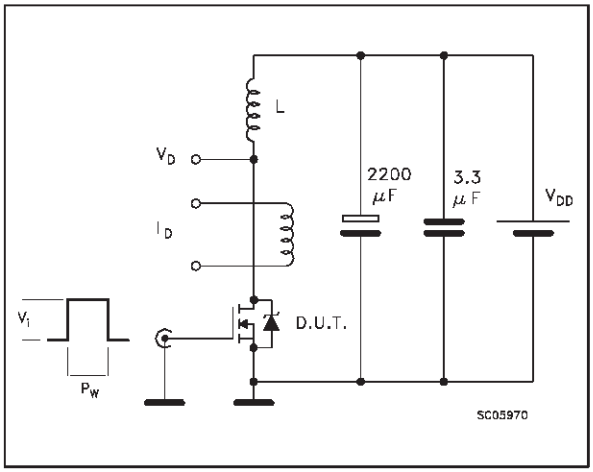

Fig. 2: Unclamped Inductive Waveform

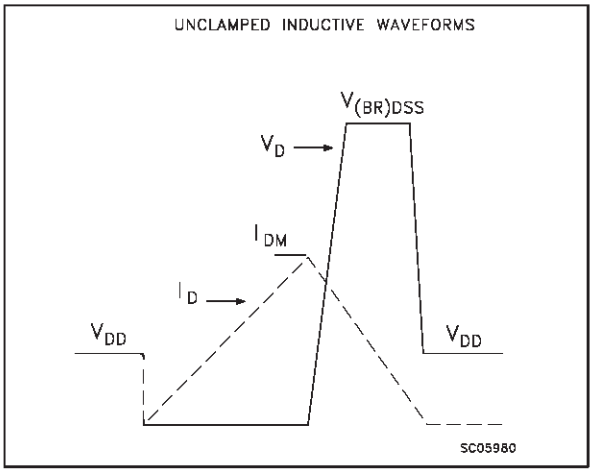

Fig. 3: Switching Times Test Circuits For Resistive Load

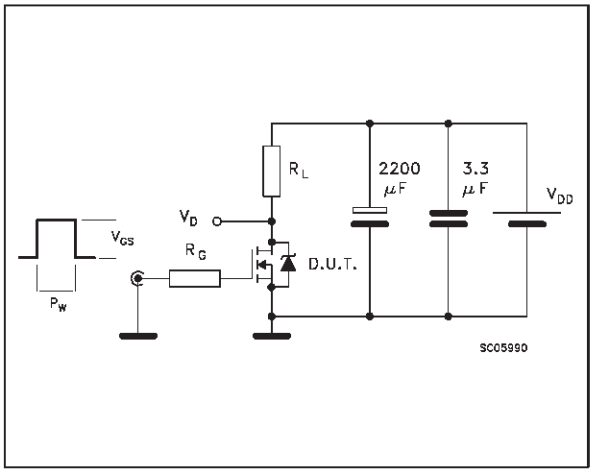

Fig. 4: Gate Charge test Circuit

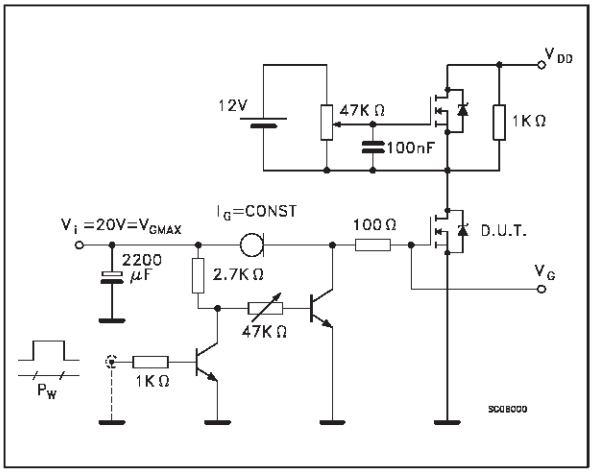

Fig. 5: Test Circuit For Inductive Load Switching And Diode Recovery Times

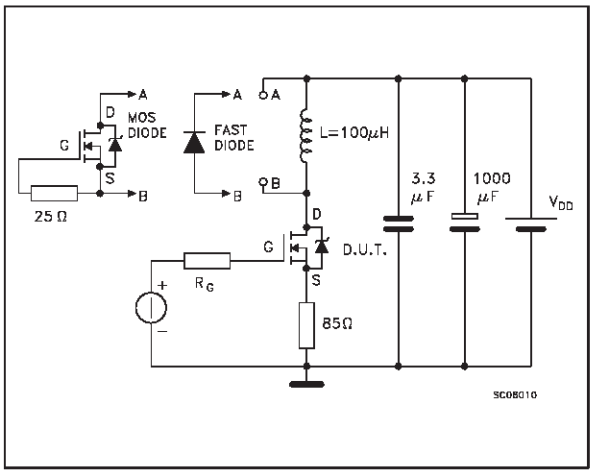

TO-252 (DPAK) MECHANICAL DATA

DIM.	mm			inch		
	MIN.	TYP.	MAX.	MIN.	TYP.	MAX.
A	2.2		2.4	0.086		0.094
A1	0.9		1.1	0.035		0.043
A2	0.03		0.23	0.001		0.009
B	0.64		0.9	0.025		0.035
B2	5.2		5.4	0.204		0.212
C	0.45		0.6	0.017		0.023
C2	0.48		0.6	0.019		0.023
D	6		6.2	0.236		0.244
E	6.4		6.6	0.252		0.260
G	4.4		4.6	0.173		0.181
H	9.35		10.1	0.368		0.397
L2		0.8			0.031	
L4	0.6		1	0.023		0.039

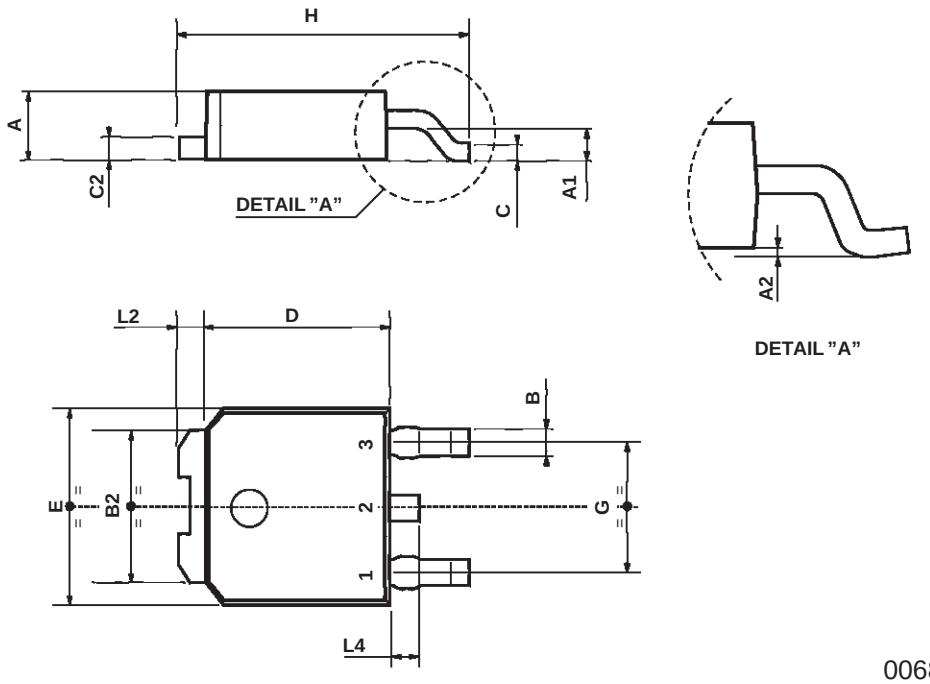

0068772-B

Information furnished is believed to be accurate and reliable. However, STMicroelectronics assumes no responsibility for the consequences of use of such information nor for any infringement of patents or other rights of third parties which may result from its use. No license is granted by implication or otherwise under any patent or patent rights of STMicroelectronics. Specification mentioned in this publication are subject to change without notice. This publication supersedes and replaces all information previously supplied. STMicroelectronics products are not authorized for use as critical components in life support devices or systems without express written approval of STMicroelectronics.

The ST logo is a trademark of STMicroelectronics

© 1999 STMicroelectronics – Printed in Italy – All Rights Reserved

STMicroelectronics GROUP OF COMPANIES

Australia - Brazil - China - Finland - France - Germany - Hong Kong - India - Italy - Japan - Malaysia - Malta - Morocco - Singapore - Spain - Sweden - Switzerland - United Kingdom - U.S.A.

http://www.st.com