STCS05

0.5 A max constant current LED driver

Features

- Up to 40 V input voltage
- Less than 0.5 V voltage overhead
- Up to 0.5 A output current
- PWM dimming pin
- Shutdown pin
- LED disconnection diagnostic

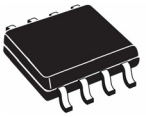

SO-8

Applications

- LED constant current supplying for varying input voltages
- Low voltage lighting
- Small appliances LED lighting
- Car LED lights

Description

The STCS05 is a BiCMOS constant current source designed to provide a precise constant current starting from a varying input voltage source. The main target is to replace discrete components solution for driving LEDs in low voltage applications such as 5 V, 12 V or 24 V giving benefits in terms of precision, integration and reliability.

The current is set with external resistor up to 0.5 A with a ± 10 % precision; a dedicated pin allows implementing PWM dimming.

An open-drain pin output provides information on load disconnection condition.

Table 1. Device summary

Order code	Package	Packaging
STCS05DR	SO-8	2500 parts per reel

Contents

1 **Application diagram** 3

2 **Pin configuration** 4

3 **Maximum ratings** 5

4 **Electrical characteristics** 6

5 **Timing** 7

6 **Typical performance characteristics** 8

7 **Detail description** 9

7.1 Current setting 9

7.2 Enable 9

7.3 PWM dimming 9

7.4 Diagnostic 9

8 **Application information** 10

8.1 Reverse polarity protection 10

8.2 Thermal considerations 10

9 **Package mechanical data** 12

10 **Revision history** 15

Application diagram

Figure 1. Typical application diagram for 0.5 A LED current

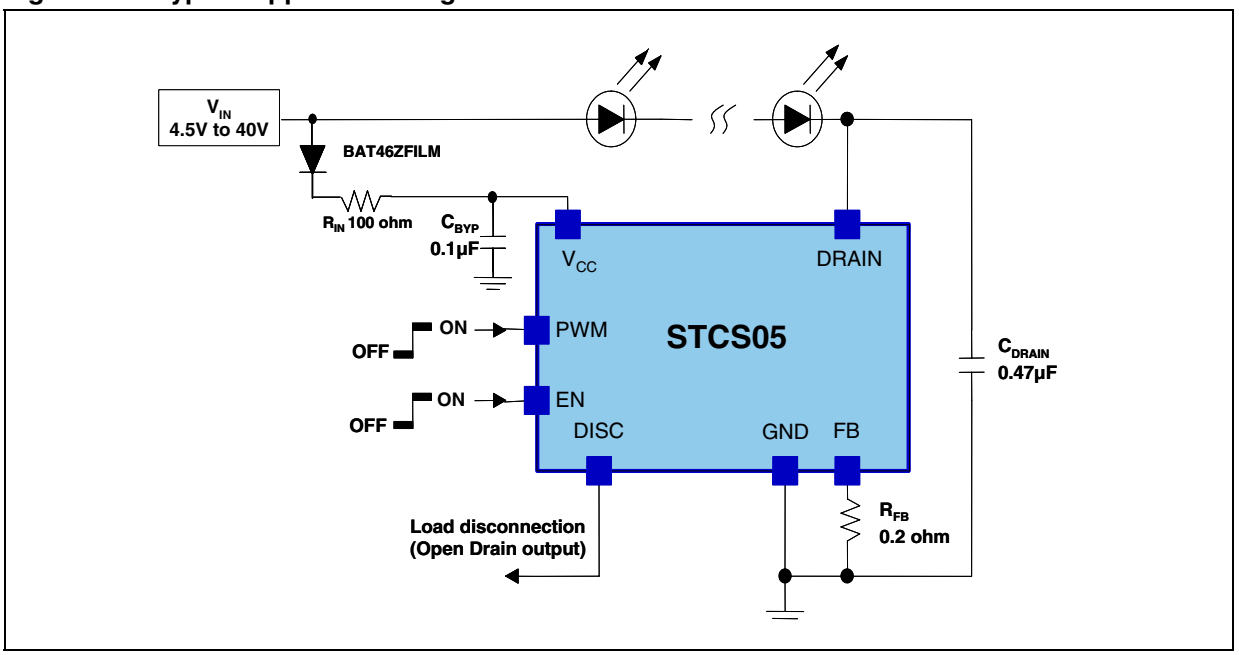

1 Pin configuration

Figure 2. Pin connections (top view)

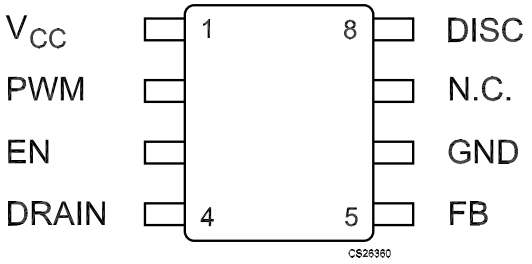

Table 2. Pin description

Pin n°	Symbol	Note
1	V_{CC}	Supply voltage
2	PWM	PWM dimming input
3	EN	Shutdown pin
4	DRAIN	Internal N-MOSFET drain
5	FB	External resistor connection for current set (N-MOSFET source)
6	GND	Ground
7	N.C.	In order to guarantee the device works properly it is mandatory to leave this pin floating
8	DISC	Load disconnection flag (open drain)

2 Maximum ratings

Table 3. Absolute maximum ratings

Symbol	Parameter	Value	Unit
V_{CC}	DC supply voltage	-0.3 to +45	V
V_D	Drain voltage	-0.3 to +45	
PWM, EN, DISC	Logic pins	-0.3 to + V_{CC} + 0.3	V
FB	Configuration pins	-0.3 to + 3.3	V
ESD	Human body model (all pins)	±2	kV
T_J (1)	Junction temperature	-40 to 150	°C
T_{STG}	Storage temperature range	-55 to 150	°C

1. T_J is calculated from the ambient temperature T_A and the power dissipation P_D according the following formula: $T_J = T_A + (P_D \times R_{thJA})$. See *Figure 12* for details of max power dissipation for ambient temperatures higher than 25°C.

Note: Absolute maximum ratings are those values beyond which damage to the device may occur. Functional operation under these conditions is not implied.

Table 4. Thermal data

Symbol	Parameter	SO-8	Unit
R_{thJC}	Thermal resistance junction-case	20	°C/W
R_{thJA}	Thermal resistance junction-ambient (1)	100	°C/W

1. This value depends from thermal design of PCB on which the device is mounted.

3 Electrical characteristics

Table 5. Electrical characteristics
(V_{CC} = 12 V; I_O = 100 mA; T_J = -40 °C to 125 °C; V_{DRAIN} = 1 V; C_{DRAIN} = 1 µF; C_{BYP} = 100 nF typical values are at T_A = 25 °C, unless otherwise specified)

Symbol	Parameter	Test conditions	Min.	Typ.	Max.	Unit
V_{CC}	Supply voltage range		4.5		40	V
	Output current range		1		500	mA
I_O	Output current	R_{FB} = 0.2Ω		500		mA
	Regulation (percentage with respect to V_{CC} = 12 V)	V_{CC} = 4.5 to 40V, I_O = 100mA; V_{DRAIN} = 1V	-1		+1	%
V_{FB}	Feedback Voltage	I_O = 0 to 0.5A	90	100	110	mV
I_{CC}	Quiescent current (Measured on V_{CC} pin)	On Mode		450	750	µA
		Shutdown Mode; V_{CC} = 5 to 12V			1	
		Shutdown Mode; V_{CC} = 12 to 40V			3	
V_{DROP}	Dropout voltage (V_{DRAIN} to GND)	I_O = 100mA		0.12	0.16	V
		I_O = 0.5A		0.58	0.9	
$LEAK_{DRAIN}$	Drain leakage current	Shutdown; V_{DRAIN} = 40V			10	µA
T_D	Delay on PWM signal (see *Figure 3*)	V_{PWM} rising, V_{CC} = 12V		3		µs
		V_{PWM} falling, V_{CC} = 12V		1.2		
DISC	Low level voltage	I_{SINK} = 5mA		0.2	0.5	V
	Leakage current	V_{DISC} = 5V			1	µA
	Load disconnection threshold (V_{DRAIN}-GND)	DISC Turn-ON		75		mV
		DISC Turn-OFF		110		
Thermal Protection	Shutdown temperature			155		°C
	Hysteresis			25		
Logic Inputs (PWM and EN)						
V_L	Input low level				0.4	V
V_H	Input high level		1.2			V
	EN, PWM leakage current	V_{EN} = 5V; V_{PWM} = 5V			2	µA
	EN input leakage current	V_{EN} = 40V			60	
	PWM input leakage current	V_{PWM} = 40V			120	

Note: All devices 100 % production tested at T_A = 25 °C. Limits over the operating temperature range are guaranteed by design.

4 Timing

Figure 3. PWM and output current timing

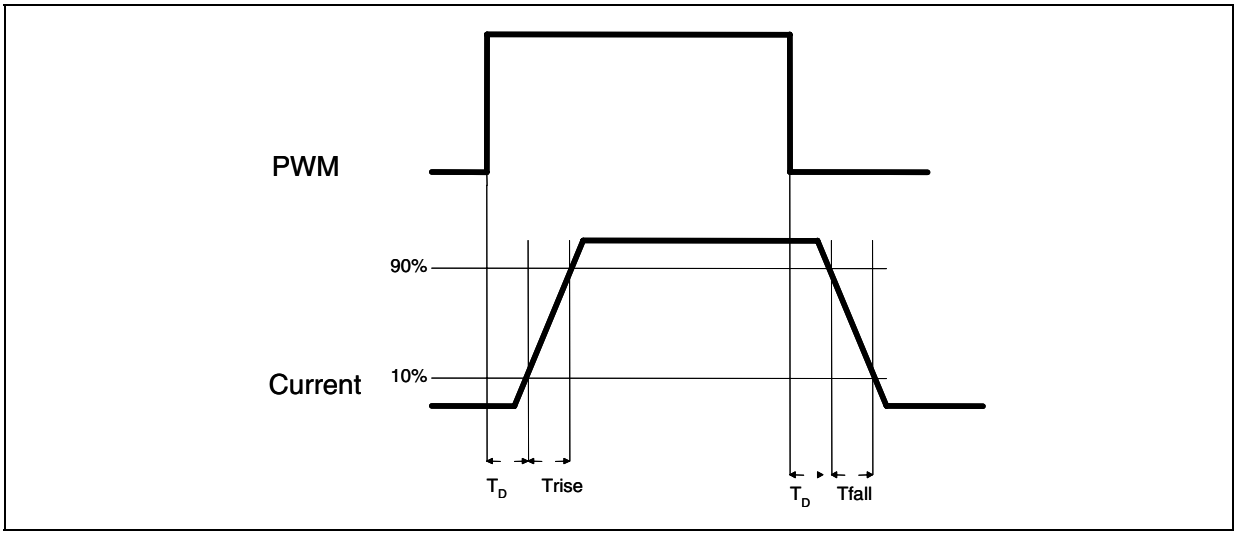

Figure 4. Block diagram

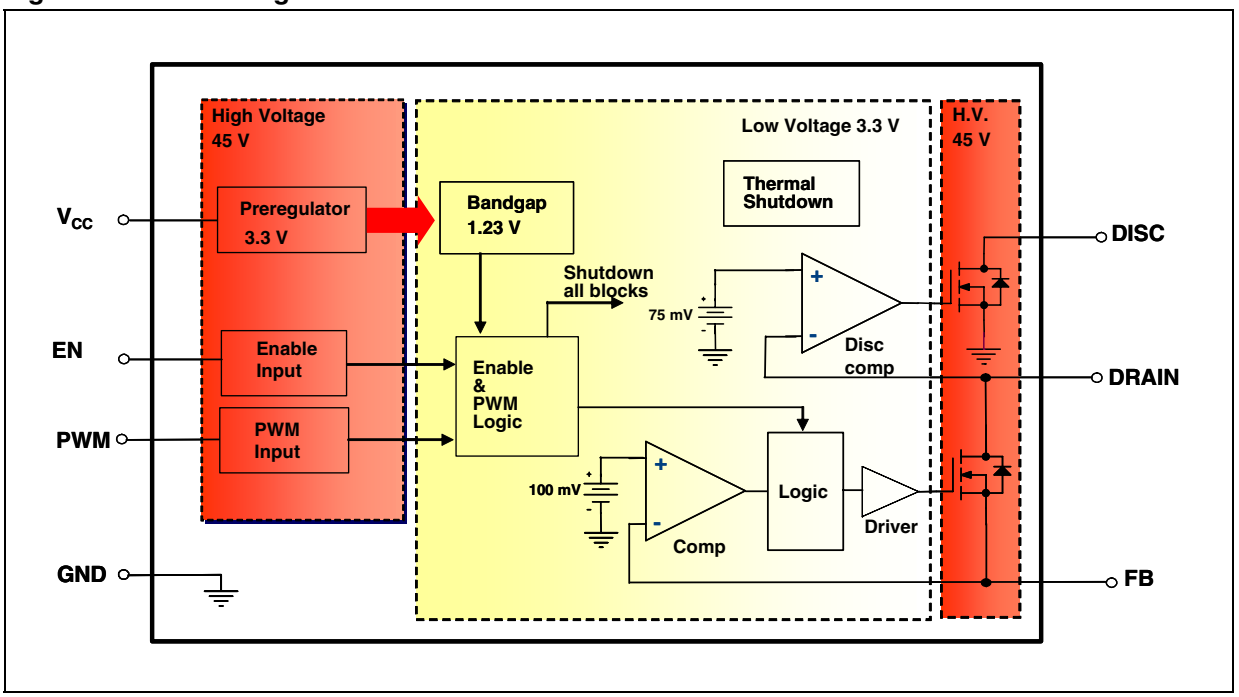

5 Typical performance characteristics

Figure 5. I_{DRAIN} vs V_{CC}, T_A = 25 °C

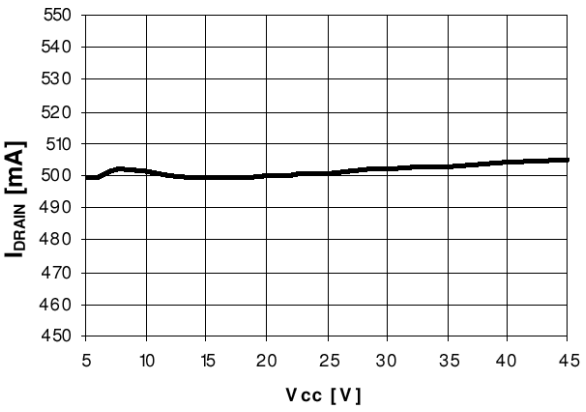

Figure 6. I_{DRAIN} vs R_{SET}

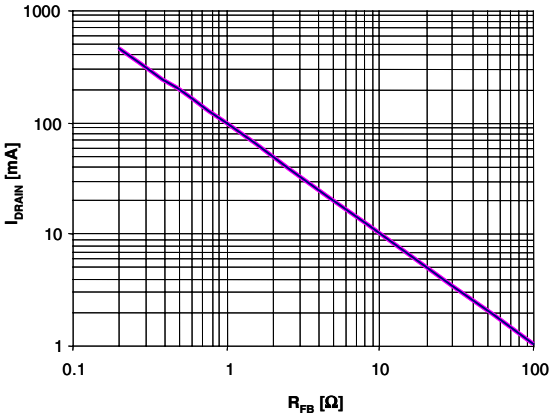

Figure 7. I_{DRAIN} vs temperature

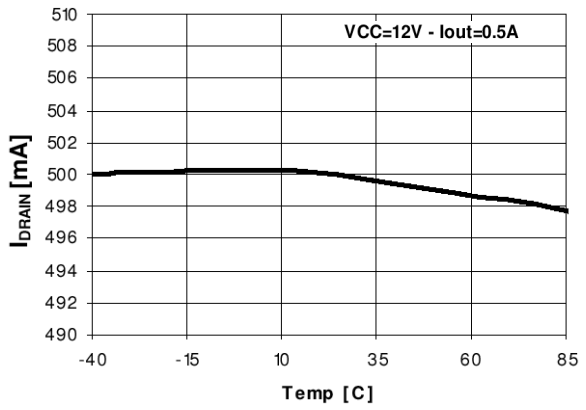

Figure 8. V_{DROP} (including V_{FB}) vs temperature

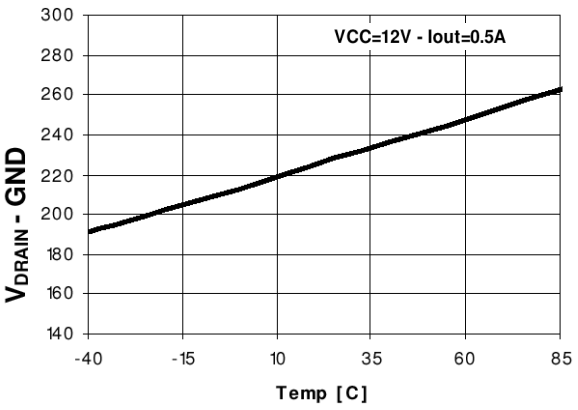

Figure 9. I_{CC} vs temperature

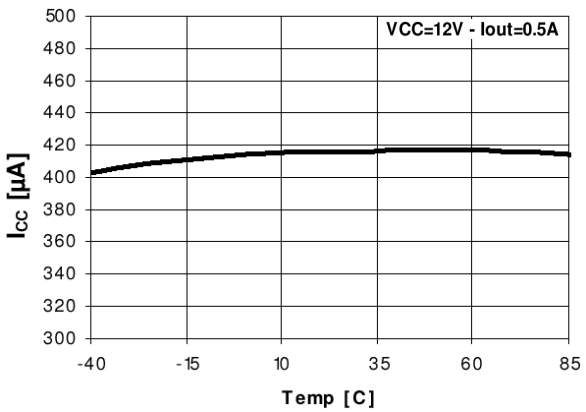

Figure 10. I_{CC} vs V_{CC}

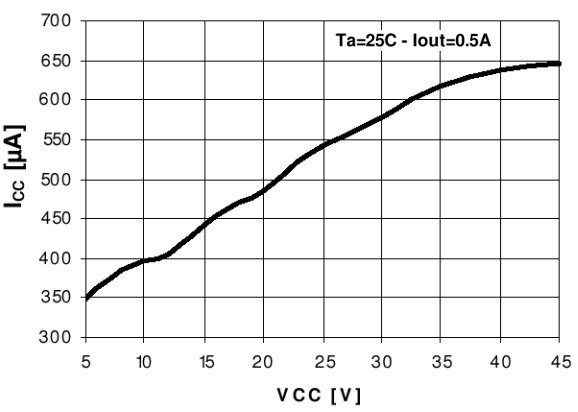

6 Detail description

The STCS05 is a BiCMOS constant current source designed to provide a precise constant current starting from a varying input voltage source. The main target is to replace discrete components solution for driving LEDs in low voltage applications such as 5 V, 12 V or 24 V giving benefits in terms of precision, integration and reliability.

6.1 Current setting

The current is set with an external sensing resistor connected to the FB pin. The feedback voltage is 100 mV, then a low resistor value can be chosen reducing power dissipation. A value between 1 mA and 500 mA can be set according to the resistor value, the resulting output current has a tolerance of ± 10 %.

For instance, should one need a 350 mA LEDs current, R_F should be selected according to the following equation:

$R_F = V_{FB} / I_{LEDs} = 100\ mV / 350\ mA = 284\ m\Omega$

6.2 Enable

When the enable pin is low the device completely off thus reducing current consumption to less than 1 µA. When in shutdown mode, the internal main switch is off.

6.3 PWM dimming

The PWM input allows implementing PWM dimming on the LED current; when the PWM input is high the main switch will be on and vice versa. A typical frequency range for the input is from few Hertz to 50 kHz. The maximum dimming frequency is limited by the minimum rise/fall time of the current which is around 4 µs each. Above 50 kHz the current waveforms starts assuming a triangular shape.

While the PWM input is switching, the overall circuitry remains on, this is needed in order to implement a short delay time T_D (see *Figure 3*)

Since the PWM pin is controlling just the main switch, the overall circuitry is always on and it is able to control the delay time between the PWM input signal and the output current in the range of few µs, this is important to implement synchronization among several light LED sources.

6.4 Diagnostic

When STCS05 is in on mode (EN is high), the device is able to detect disconnection or fail of the LED string monitoring V_{DRAIN} pin. If V_{DRAIN} is lower than 75 mV the DISC pin is pulled low regardless the PWM pin status. This information can be used by the system to inform that some problem happens in the LEDs.

7 Application information

7.1 Reverse polarity protection

STCS05 must be protected from reverse connection of the supply voltage. Since the current sunk from V_{CC} pin is in the range of 450 µA a small diode connected to V_{CC} is able to protect the chip. Care must be taken for the whole application circuit, especially for the LEDs, in fact, in case a negative voltage is applied between V_{IN} and GND, a negative voltage will be applied to the LED string that must have a total breakdown voltage higher than the negative applied voltage in order to avoid any damage.

Figure 11. Reverse polarity condition

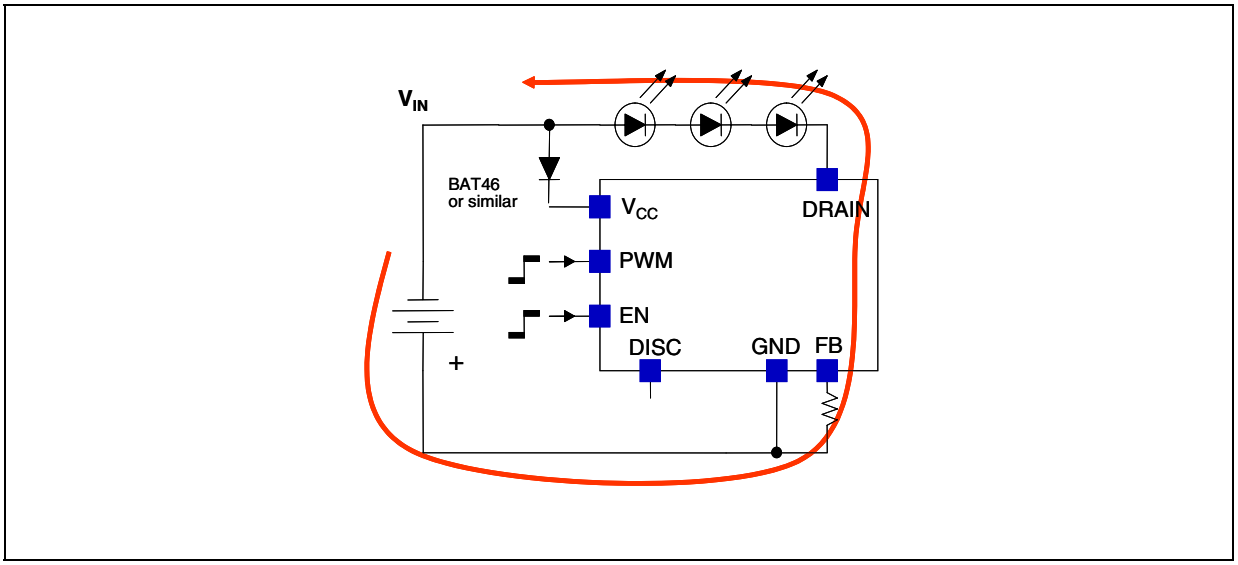

7.2 Thermal considerations

The STCS05 is able to control a LED current up to 500 mA and able to sustain a voltage on the drain pin up to 40 V. Those operating conditions are however limited by thermal constraints, the thermal resistances shown in the thermal data section is the typical ones.

The power dissipation in the device can be calculated as follow:

$P_D = (V_{DRAIN} - V_{FB}) \times I_{LED} + (V_{CC} \times I_{CC})$

basing on this and on the thermal resistance and ambient temperature, the junction temperature can be calculated as:

$T_J = R_{thJA} \times P_D + T_A$

A typical application could be:

- Input Voltage: 12 V;
- 3 white LEDs with an typical $V_F = 3.6$ V;
- LEDs current: 350 mA;
- Package: SO-8;
- $T_A = 50$ °C;

In this case V_{DRAIN} = 12 - 3 x 3.6 = 1.2 V

P_D = (1.2 - 0.1) x 0.35 + 12 x 0.5 x 10^{-3} = 0.385 + 6 x 10^{-3} = 391 mW

The junction temperature will be:

T_J = 100 x 0.391 + 50 = 89 °C.

The following pictures show the maximum power dissipation according to the ambient temperature:

Figure 12. Maximum power dissipation vs T_A for SO-8

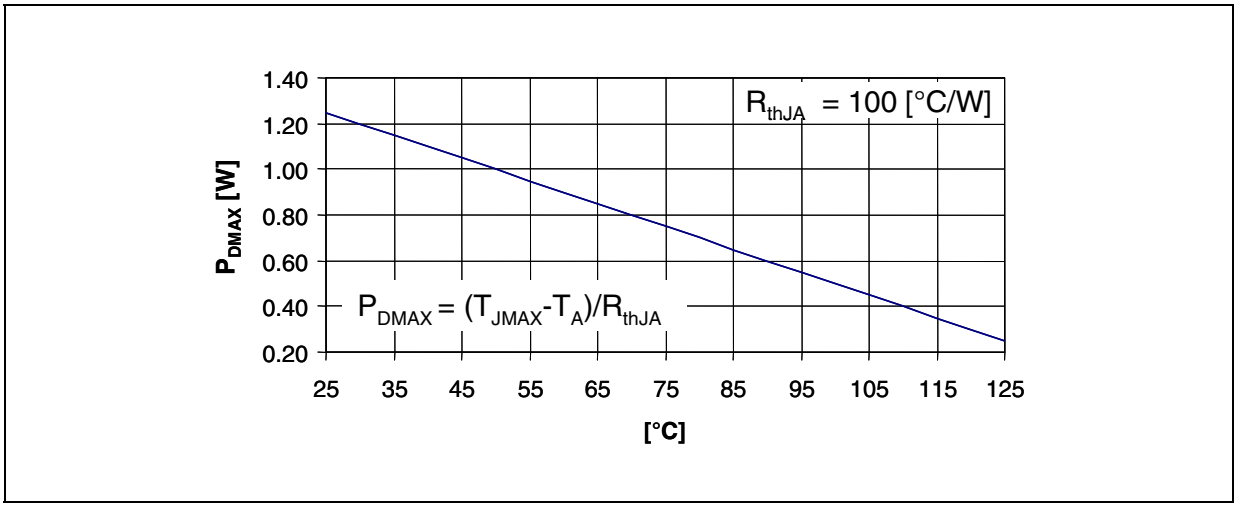

8 Package mechanical data

In order to meet environmental requirements, ST offers these devices in ECOPACK® packages. These packages have a lead-free second level interconnect. The category of second Level Interconnect is marked on the package and on the inner box label, in compliance with JEDEC Standard JESD97. The maximum ratings related to soldering conditions are also marked on the inner box label. ECOPACK is an ST trademark. ECOPACK specifications are available at: www.st.com.

SO-8 mechanical data

Dim.	mm.			inch.		
	Min.	Typ.	Max.	Min.	Typ.	Max.
A	1.35		1.75	0.053		0.069
A1	0.10		0.25	0.04		0.010
A2	1.10		1.65	0.043		0.065
B	0.33		0.51	0.013		0.020
C	0.19		0.25	0.007		0.010
D	4.80		5.00	0.189		0.197
E	3.80		4.00	0.150		0.157
e		1.27			0.050	
H	5.80		6.20	0.228		0.244
h	0.25		0.50	0.010		0.020
L	0.40		1.27	0.016		0.050
k	8° (max.)					
ddd			0.1			0.04

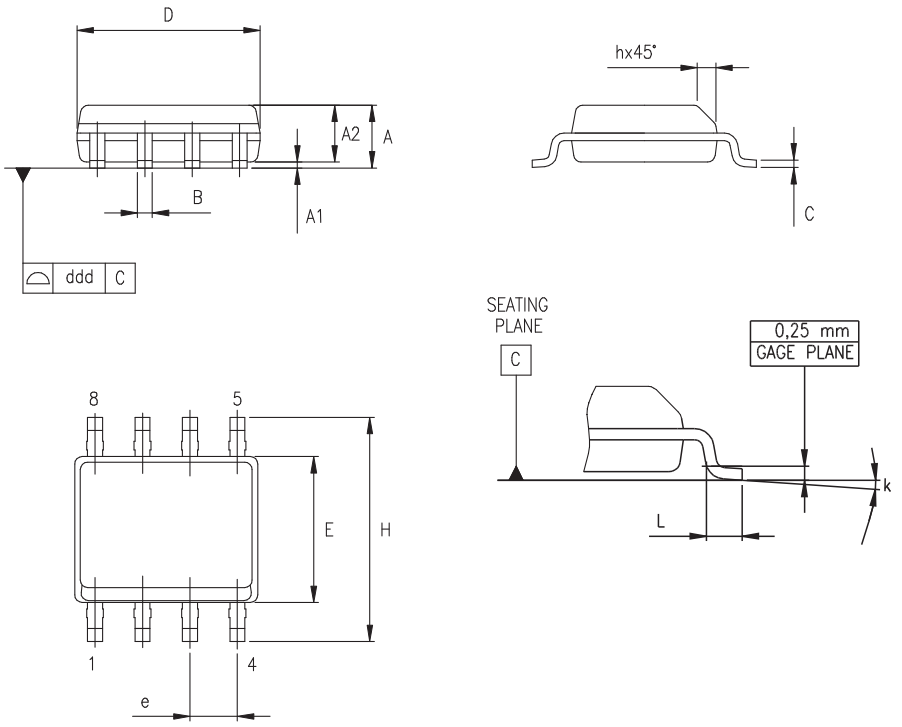

0016023/C

Tape & reel SO-8 mechanical data

Dim.	mm.			inch.		
	Min.	Typ.	Max.	Min.	Typ.	Max.
A			330			12.992
C	12.8		13.2	0.504		0.519
D	20.2			0.795		
N	60			2.362		
T			22.4			0.882
Ao	8.1		8.5	0.319		0.335
Bo	5.5		5.9	0.216		0.232
Ko	2.1		2.3	0.082		0.090
Po	3.9		4.1	0.153		0.161
P	7.9		8.1	0.311		0.319

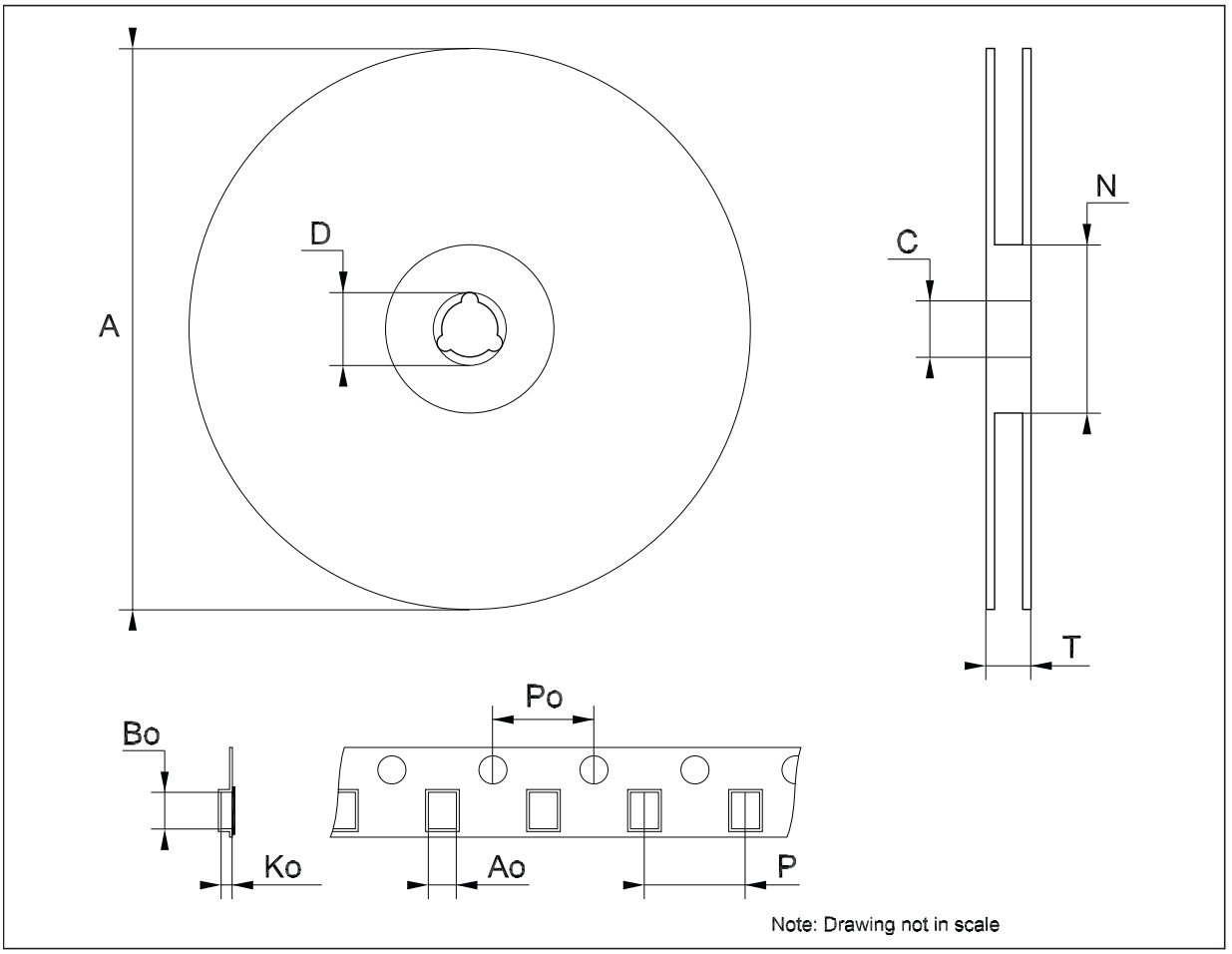

Note: Drawing not in scale

9 Revision history

Table 6. Document revision history

Date	Revision	Changes
03-Oct-2007	1	Initial release.
15-Feb-2008	2	Modified: *Figure 1 on page 3*, *Figure 4 on page 7*, *Figure 12 on page 11*.
05-May-2008	3	Modified: *Table 2 on page 4*, pin 7 description.
02-Jul-2008	4	Modified: *Table 5 on page 6*.

Please Read Carefully:

Information in this document is provided solely in connection with ST products. STMicroelectronics NV and its subsidiaries (“ST”) reserve the right to make changes, corrections, modifications or improvements, to this document, and the products and services described herein at any time, without notice.

All ST products are sold pursuant to ST’s terms and conditions of sale.

Purchasers are solely responsible for the choice, selection and use of the ST products and services described herein, and ST assumes no liability whatsoever relating to the choice, selection or use of the ST products and services described herein.

No license, express or implied, by estoppel or otherwise, to any intellectual property rights is granted under this document. If any part of this document refers to any third party products or services it shall not be deemed a license grant by ST for the use of such third party products or services, or any intellectual property contained therein or considered as a warranty covering the use in any manner whatsoever of such third party products or services or any intellectual property contained therein.

UNLESS OTHERWISE SET FORTH IN ST’S TERMS AND CONDITIONS OF SALE ST DISCLAIMS ANY EXPRESS OR IMPLIED WARRANTY WITH RESPECT TO THE USE AND/OR SALE OF ST PRODUCTS INCLUDING WITHOUT LIMITATION IMPLIED WARRANTIES OF MERCHANTABILITY, FITNESS FOR A PARTICULAR PURPOSE (AND THEIR EQUIVALENTS UNDER THE LAWS OF ANY JURISDICTION), OR INFRINGEMENT OF ANY PATENT, COPYRIGHT OR OTHER INTELLECTUAL PROPERTY RIGHT.

UNLESS EXPRESSLY APPROVED IN WRITING BY AN AUTHORIZED ST REPRESENTATIVE, ST PRODUCTS ARE NOT RECOMMENDED, AUTHORIZED OR WARRANTED FOR USE IN MILITARY, AIR CRAFT, SPACE, LIFE SAVING, OR LIFE SUSTAINING APPLICATIONS, NOR IN PRODUCTS OR SYSTEMS WHERE FAILURE OR MALFUNCTION MAY RESULT IN PERSONAL INJURY, DEATH, OR SEVERE PROPERTY OR ENVIRONMENTAL DAMAGE. ST PRODUCTS WHICH ARE NOT SPECIFIED AS "AUTOMOTIVE GRADE" MAY ONLY BE USED IN AUTOMOTIVE APPLICATIONS AT USER’S OWN RISK.

Resale of ST products with provisions different from the statements and/or technical features set forth in this document shall immediately void any warranty granted by ST for the ST product or service described herein and shall not create or extend in any manner whatsoever, any liability of ST.

ST and the ST logo are trademarks or registered trademarks of ST in various countries.

Information in this document supersedes and replaces all information previously supplied.

The ST logo is a registered trademark of STMicroelectronics. All other names are the property of their respective owners.

© 2008 STMicroelectronics - All rights reserved

STMicroelectronics group of companies

Australia - Belgium - Brazil - Canada - China - Czech Republic - Finland - France - Germany - Hong Kong - India - Israel - Italy - Japan - Malaysia - Malta - Morocco - Singapore - Spain - Sweden - Switzerland - United Kingdom - United States of America

www.st.com