100 mA Negative Voltage Regulators

The STC79L00, A Series negative voltage regulators are inexpensive, easy−to−use devices suitable for numerous applications requiring up to 100 mA. Like the higher powered STC7900 Series negative regulators, this series features thermal shutdown and current limiting, making them remarkably rugged. In most applications, no external components are required for operation.

The STC79L00 devices are useful for on−card regulation or any other application where a regulated negative voltage at a modest current level is needed. These regulators offer substantial advantage over the common resistor/Zener diode approach.

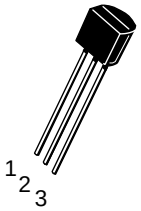

TO−92

Pin: 1. Output
2. Ground
3. Input

THREE−TERMINAL LOW CURRENT NEGATIVE FIXED VOLTAGE REGULATORS

Features

- Pb−Free Packages are Available
- No External Components Required
- Internal Short Circuit Current Limiting
- Internal Thermal Overload Protection
- Low Cost
- Complementary Positive Regulators Offered (STC78L00 Series)
- Available in Either ±5% (AC) or ±10% (C) Selections

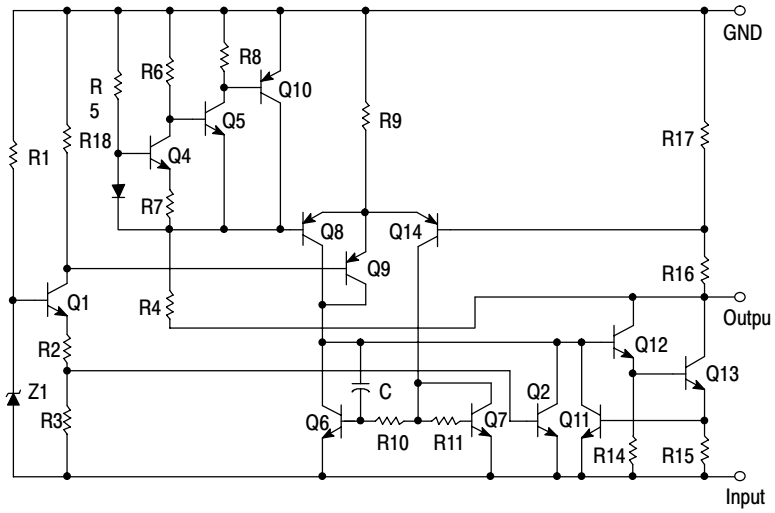

Figure 1. Representative Schematic Diagram

MAXIMUM RATINGS (T_A = +125°C, unless otherwise noted.)

Rating	Symbol	Value	Unit
Input Voltage (−5 V) (-12,-15,-18 V)	V_I	-30 -35	Vdc
Storage Temperature Range	T_{stg}	−65 to +150	°C
Operating Junction Temperature Range	T_J	0 to +150	°C

Maximum ratings are those values beyond which device damage can occur. Maximum ratings applied to the device are individual stress limit values (not normal operating conditions) and are not valid simultaneously. If these limits are exceeded, device functional operation is not implied, damage may occur and reliability may be affected.

ELECTRICAL CHARACTERISTICS (V_I = -10 V, I_O = 40 mA, C_I = 0.33 θF, C_O = 0.1 θF, −40°C < T_J < +125°C , 0°C < T_J < +125°C , unless otherwise noted.)

Characteristics	Symbol	STC79L05			Unit
		Min	Typ	Max	
Output Voltage (T_J = +25°C)	V_O	-4.8	-5.0	-5.2	Vdc
Line Regulation (T_J = +25°C, I_O = 40 mA) -20 Vdc ≤ V_I ≤ -7 Vdc -20 Vdc ≤ V_I ≤ -8 Vdc	Reg_{line}	 – –	 55 45	 150 100	mV
Load Regulation (T_J = +25°C, 1.0 mA ≤ I_O ≤ 100 mA) (T_J = +25°C, 1.0 mA ≤ I_O ≤ 40 mA)	Reg_{load}	 – –	 11 5.0	 60 30	mV
Output Voltage (-20 Vdc ≤ V_I ≤ -7.0 Vdc, 1.0 mA ≤ I_O ≤ 40 mA) (V_I = -10 V, 1.0 mA ≤ I_O ≤ 70 mA)	V_O	 -4.75 -4.75	 – –	 -5.25 -5.25	Vdc
Input Bias Current (T_J = +25°C) (T_J = +125°C)	I_{IB}	 – –	 3.8 –	 6.0 5.5	mA
Input Bias Current Change (-20.0 Vdc ≤ V_I ≤ -8 Vdc) (1.0 mA ≤ I_O ≤ 40 mA)	ΔI_{IB}	 – –	 – –	 1.5 0.1	mA
Output Noise Voltage (T_A = +25°C, 10 Hz ≤ f ≤ 100 kHz)	V_n	–	40	–	θV
Ripple Rejection (I_O = 40 mA, f = 120 Hz, -18 Vdc ≤ V_I ≤ -8.0 V, T_J = +25°C)	RR	41	49	–	dB
Dropout Voltage (T_J = +25°C)	$V_I - V_O$	–	1.7	–	Vdc

NOTE: T_{low} = −40°C, T_{high} = +125°C. Guaranteed by design. NCV prefix is for automotive and other applications requiring site and change control.

ELECTRICAL CHARACTERISTICS (V_I = -19 V, I_O = 40 mA, C_I = 0.33 θF, C_O = 0.1 θF, −40°C < T_J < +125°C , 0°C < T_J < +125°C , unless otherwise noted.)

Characteristics	Symbol	STC79L12			Unit
		Min	Typ	Max	
Output Voltage (T_J = +25°C)	V_O	-11.5	-12	-12.5	Vdc
Line Regulation (T_J = +25°C, I_O = 40 mA) -27Vdc ≤ V_I ≤ -14.5 Vdc -27 Vdc ≤ V_I ≤ -16 Vdc	Reg_{line}	 – –	 120 100	 250 200	mV
Load Regulation (T_J = +25°C, 1.0 mA ≤ I_O ≤ 100 mA) (T_J = +25°C, 1.0 mA ≤ I_O ≤ 40 mA)	Reg_{load}	 – –	 20 10	 100 50	mV
Output Voltage (-27 Vdc ≤ V_I ≤ -14.5 Vdc, 1.0 mA ≤ I_O ≤ 40 mA) (V_I = -19 V, 1.0 mA ≤ I_O ≤ 70 mA)	V_O	 -11.4 -11.4	 – –	 -12.6 -12.6	Vdc
Input Bias Current (T_J = +25°C) (T_J = +125°C)	I_{IB}	 – –	 4.2 –	 6.5 6.0	mA
Input Bias Current Change (-27 Vdc ≤ V_I ≤ -16 Vdc) (1.0 mA ≤ I_O ≤ 40 mA)	ΔI_{IB}	 – –	 – –	 1.5 0.1	mA
Output Noise Voltage (T_A = +25°C, 10 Hz ≤ f ≤ 100 kHz)	V_n	–	80	–	θV
Ripple Rejection (I_O = 40 mA, f = 120 Hz, -25 V ≤ V_I ≤ -15 V, T_J = +25°C)	RR	37	42	–	dB
Dropout Voltage (T_J = +25°C)	$V_I - V_O$	–	1.7	–	Vdc

ELECTRICAL CHARACTERISTICS (V_I = - 23 V, I_O = 40 mA, C_I = 0.33 θF, C_O = 0.1 θF, −40°C < T_J < +125°C , 0°C < T_J < +125°C , unless otherwise noted.)

Characteristics	Symbol	STC79L15			Unit
		Min	Typ	Max	
Output Voltage (T_J = +25°C)	V_O	-14.4	-15	-15.6	Vdc
Line Regulation (T_J = +25°C, I_O = 40 mA) -30 Vdc ≤ V_I ≤ -17.5Vdc -30 Vdc ≤ V_I ≤ -20 Vdc	Reg_{line}	 – –	 130 110	 300 250	mV
Load Regulation (T_J = +25°C, 1.0 mA ≤ I_O ≤ 100 mA) (T_J = +25°C, 1.0 mA ≤ I_O ≤ 40 mA)	Reg_{load}	 – –	 25 12	 150 75	mV
Output Voltage (-30 Vdc ≤ V_I ≤ -17.5 Vdc, 1.0 mA ≤ I_O ≤ 40 mA) (V_I = -23 V, 1.0 mA ≤ I_O ≤ 70 mA)	V_O	 -14.25 -14.25	 – –	 -15.75 -15.75	Vdc
Input Bias Current (T_J = +25°C) (T_J = +125°C)	I_{IB}	 – –	 4.4 –	 6.5 6.0	mA
Input Bias Current Change (-30 Vdc ≤ V_I ≤ -20 Vdc) (1.0 mA ≤ I_O ≤ 40 mA)	ΔI_{IB}	 – –	 – –	 1.5 0.1	mA
Output Noise Voltage (T_A = +25°C, 10 Hz ≤ f ≤ 100 kHz)	V_n	–	90	–	θV
Ripple Rejection (I_O = 40 mA, f = 120 Hz, -28.5 V ≤ V_I ≤ -18.5 V, T_J = +25°C)	RR	34	39	–	dB
Dropout Voltage (T_J = +25°C)	$V_I - V_O$	–	1.7	–	Vdc

ELECTRICAL CHARACTERISTICS (V_I = -27 V, I_O = 40 mA, C_I = 0.33 θF, C_O = 0.1 θF, 0°C < T_J < +125°C, unless otherwise noted.)

Characteristics	Symbol	STC79L18			Unit
		Min	Typ	Max	
Output Voltage (T_J = +25°C)	V_O	-17.3	-18	-18.7	Vdc
Line Regulation (T_J = +25°C, I_O = 40 mA) -33Vdc ≤ V_I ≤ -21.4 Vdc -33 Vdc ≤ V_I ≤ -20.7 Vdc -33Vdc ≤ V_I ≤ -22 Vdc -33Vdc ≤ V_I ≤ -21 Vdc	Reg_{line}	 – –	 45 35	 325 275	mV
Load Regulation (T_J = +25°C, 1.0 mA ≤ I_O ≤ 100 mA) (T_J = +25°C, 1.0 mA ≤ I_O ≤ 40 mA)	Reg_{load}	 – –	 30 15	 170 85	mV
Output Voltage (-33 Vdc ≤ V_I ≤ -21.4 Vdc, 1.0 mA ≤ I_O ≤ 40 mA) (-33 Vdc ≤ V_I ≤ -20.7 Vdc, 1.0 mA ≤ I_O ≤ 40 mA) (V_I = -27 V, 1.0 mA ≤ I_O ≤ 70 mA) (V_I = -27 V, 1.0 mA ≤ I_O ≤ 70 mA)	V_O	 -17.1 -17.1	 – –	 -18.9 -18.9	Vdc
Input Bias Current (T_J = +25°C) (T_J = +125°C)	I_{IB}	 – –	 3.1 –	 6.5 6.0	mA
Input Bias Current Change (-33 Vdc ≤ V_I ≤ -27 Vdc) (-33 Vdc ≤ V_I ≤ -21 Vdc) (1.0 mA ≤ I_O ≤ 40 mA)	ΔI_{IB}	 – –	 – –	 1.5 0.1	mA
Output Noise Voltage (T_A = +25°C, 10 Hz ≤ f ≤ 100 kHz)	V_n	–	150	–	θV
Ripple Rejection (I_O = 40 mA, f = 120 Hz, -33 V ≤ V_I ≤ -23 V, T_J = +25°C)	RR	33	48	–	dB
Dropout Voltage (T_J = +25°C)	$V_I - V_O$	–	1.7	–	Vdc

APPLICATIONS INFORMATION

Design Considerations

The STC79L00, A Series of fixed voltage regulators are designed with Thermal Overload Protections that shuts down the circuit when subjected to an excessive power overload condition, Internal Short Circuit Protection that limits the maximum current the circuit will pass.

In many low current applications, compensation capacitors are not required. However, it is recommended that the regulator input be bypassed with a capacitor if the regulator is connected to the power supply filter with long wire length, or if the output load capacitance is large. An input bypass capacitor should be selected to provide good high−frequency characteristics to insure stable operation under all load conditions. A 0.33 μF or larger tantalum, mylar, or other capacitor having low internal impedance at high frequencies should be chosen. The bypass capacitor should be mounted with the shortest possible leads directly across the regulator's input terminals. Normally good construction techniques should be used to minimize ground loops and lead resistance drops since the regulator has no external sense lead. Bypassing the output is also recommended.

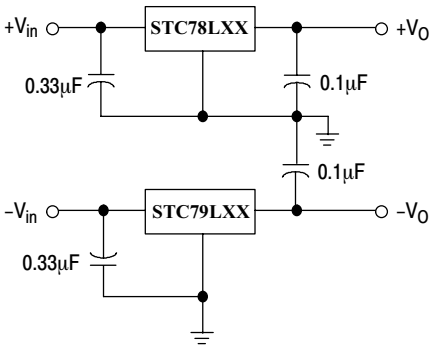

Figure 2. Positive and Negative Regulator

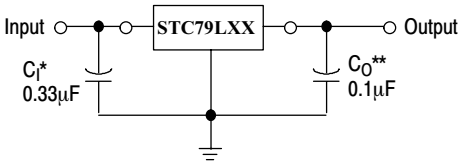

A common ground is required between the input and the output voltages. The input voltage must remain typically 2.0 V above the output voltage even during the low point on the ripple voltage.

* C_I is required if regulator is located an appreciable distance from the power supply filter

** C_O improves stability and transient response.

Figure 3. Standard Application

TYPICAL CHARACTERISTICS

(T_A = +25°C, unless otherwise noted.)

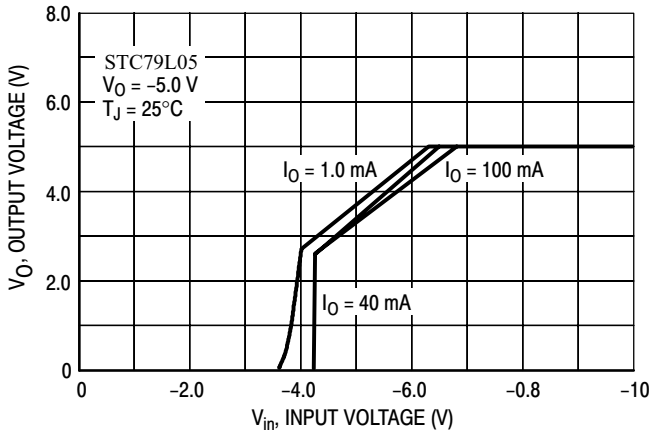

Figure 4. Dropout Characteristics

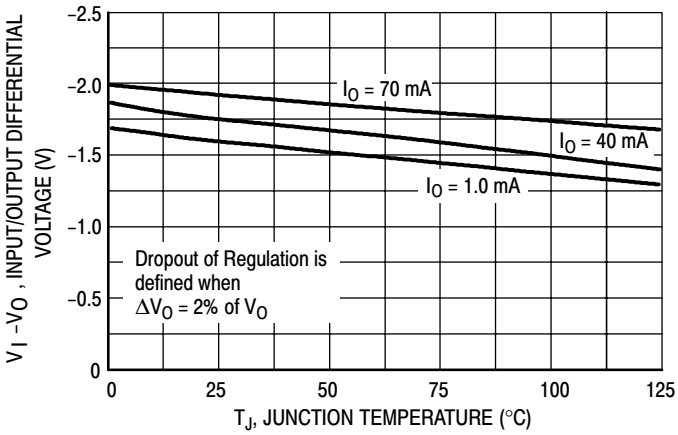

Figure 5. Dropout Voltage versus Junction Temperature

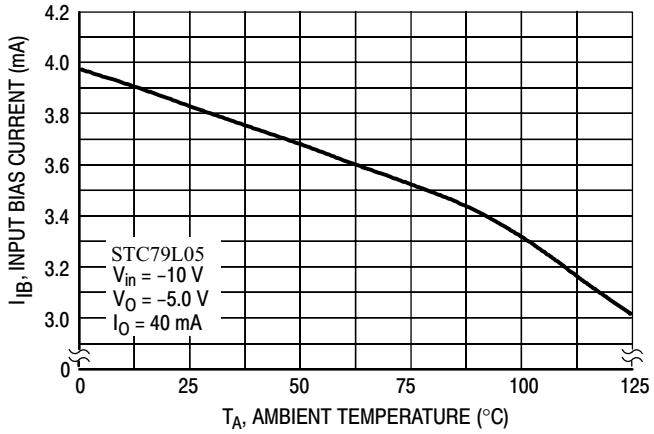

Figure 6. Input Bias Current versus Ambient Temperature

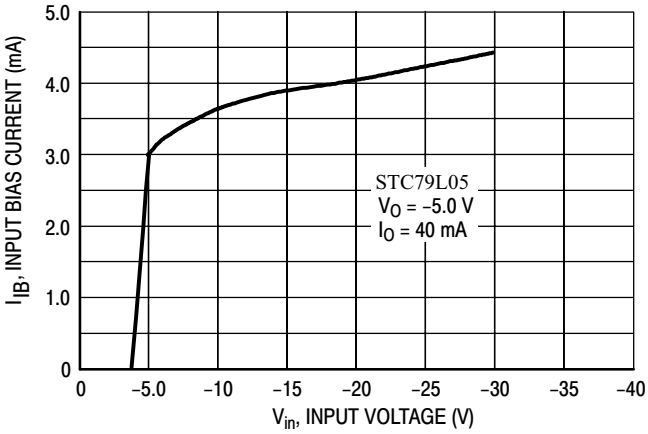

Figure 7. Input Bias Current versus Input Voltage

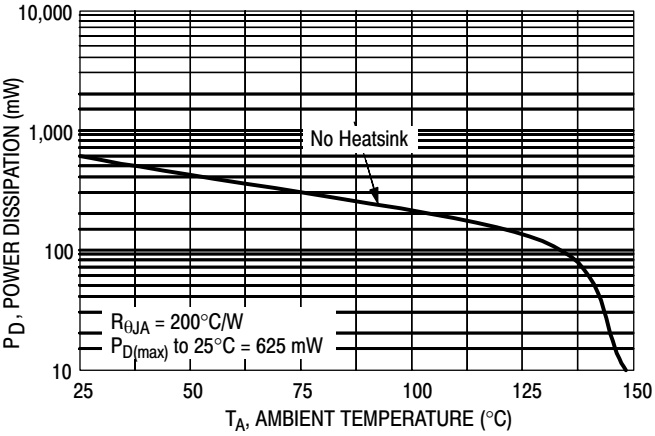

Figure 8. Maximum Average Power Dissipation versus Ambient Temperature (TO−92)