Product data sheet

Specifications



standard digital input kit - Modicon STB - 115 V AC - 2 I

STBDAI5230K

Main

Range of product	Modicon STB distributed I/O solution
Product or component type	Standard digital input kit
Kit composition	STBXTS2110, 5-terminal spring clamp connector STBXBA2000 base STBXTS1110, 5-terminal screw type connector STBDAI5230 module
Discrete input number	2
Discrete input voltage	115 V
Discrete input voltage type	AC

Complementary

Input voltage limits	0...20 V at state 0 74...132 V at state 1
Permissible voltage	132 V
Absolute maximum voltage	200 V 20 ms
Network frequency	50/60 Hz
Network frequency limits	47…63 Hz
Current state 0 guaranteed	<= 2 mA
Current state 1 guaranteed	>= 4 mA
Response time	1.5 ms off-to-on 1.5 ms on-to-off
Protection type	Power protection integrated fuse on PDM time lag 10 A Input protection resistor-limited
Insulation between channels and logic bus	1780 V for 1 minute
Cold swapping	Yes
Hot swapping	Yes for standard NIMs
Current supplied by sensor	<= 60 mA per channel
Product compatibility	I/O base STBXBA2000 Power distribution module STBPDT2100/2105
[Us] rated supply voltage	115/230 V AC
Supply	Power distribution module
Current consumption	40 mA at 5 V DC for logic bus

Disclaimer: This documentation is not intended as a substitute for and is not to be used for determining suitability or reliability of these products for specific user applications

Marking	CE
Overvoltage category	II
Status LED	1 LED (green)module status (RDY) 1 LED per channel (green)channel status (IN1 to IN2) 1 LED (red)module error (ERR)
Depth	65.1 mm
Height	18.4 mm
Width	125 mm
Net weight	0.12 kg

Environment

Standards	EN/IEC 61131-2 type 1
Product certifications	CSA FM Class 1 Division 2 UL
Pollution degree	2 conforming to IEC 60664-1
Operating altitude	<= 2000 m
IP degree of protection	IP20 conforming to EN 61131-2 class 1
Ambient air temperature for operation	0…60 °C (without derating)
Ambient air temperature for operation	32...140 °F without derating
Ambient air temperature for storage	-40…85 °C without derating
Ambient air temperature for storage	-40...185 °F without derating
Relative humidity	95 % at 60 °C without condensation
Vibration resistance	3 gn at 58…150 Hz on 35 x 7.5 mm symmetrical DIN rail 5 gn at 58…150 Hz on 35 x 15 mm symmetrical DIN rail +/-0.35 mm at 10…58 Hz
Shock resistance	30 gn for 11 ms conforming to IEC 88 reference 2-27

Packing Units

Unit Type of Package 1	PCE
Number of Units in Package 1	1
Package 1 Weight	139.0 g
Package 1 Height	3 cm
Package 1 width	8 cm
Package 1 Length	13 cm
Unit Type of Package 2	S02
Number of Units in Package 2	28
Package 2 Weight	4.318 kg
Package 2 Height	15 cm
Package 2 width	30 cm
Package 2 Length	40 cm

Offer Sustainability

Sustainable offer status	Green Premium product
REACh Regulation	REACh Declaration

EU RoHS Directive	Pro-active compliance (Product out of EU RoHS legal scope) EU RoHS Declaration
Mercury free	Yes
RoHS exemption information	Yes
China RoHS Regulation	China RoHS declaration
Environmental Disclosure	Product Environmental Profile
Circularity Profile	End of Life Information
WEEE	The product must be disposed on European Union markets following specific waste collection and never end up in rubbish bins
California proposition 65	WARNING: This product can expose you to chemicals including: Lead and lead compounds, which is known to the State of California to cause cancer and birth defects or other reproductive harm. For more information go to www.P65Warnings.ca.gov

Contractual warranty

Warranty	18 months

Dimensions

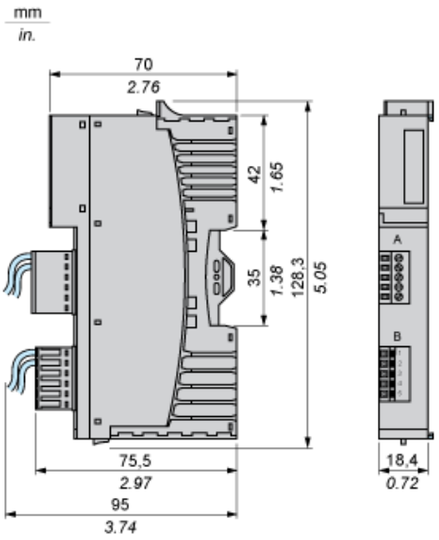

Wiring Diagram

Example

1 three-wire sensor and 1two-wire sensor

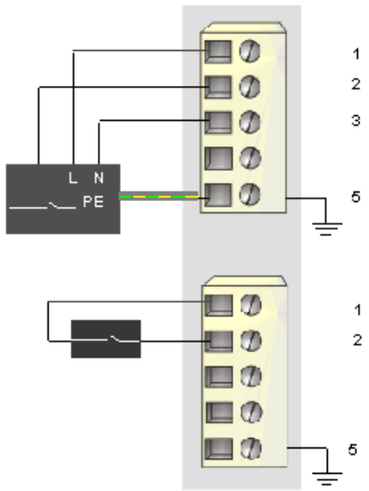

Pin	Top Connector	Bottom Connector
1	115 VAC sensor bus power (L)	115 VAC sensor bus power (L)
2	input from sensor 1	input from sensor 2
3	field power neutral (to the module)	field power neutral (to the module)
4	field power neutral (to the module)	field power neutral (to the module)
5	protective earth	protective earth