STA339BWS

2.1-channel 40-watt high-efficiency digital system Sound Terminal®

Datasheet - production data

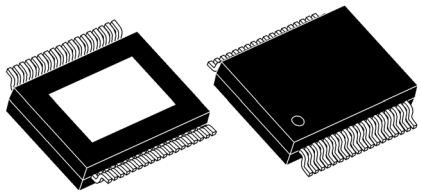

PowerSSO-36
with exposed pad down (EPD)

Features

- Wide-range supply voltage, 4.5 V to 21.5 V
- Three power output configurations:
  - 2 channels of ternary PWM (2 x 20 W into 8 Ω at 18 V) + PWM output
  - 2 channels of ternary PWM (2 x 20 W into 8 Ω at 18 V) + ternary stereo line-out
  - 2.1 channels of binary PWM (left, right, LFE) (2 x 9 W into 4 Ω +1 x 20 W into 8 Ω at 18 V)
- FFX with 100-dB SNR and dynamic range
- Scalable FFX modulation index
- Selectable 32- to 192-kHz input sample rates
- I^2C control with selectable device address
- Digital gain/attenuation +48 dB to -80 dB with 0.5-dB/step resolution
- Soft volume update with programmable ratio
- Individual channel and master gain/attenuation
- Two independent DRCs configurable as a dual-band anticlipper (B^2DRC) or as independent limiters/compressors
- EQ-DRC for DRC based on filtered signals
- Dedicated LFE processing for bass boosting
- Audio presets:
  - 15 preset crossover filters
  - 5 preset anticlipping modes
  - Preset nighttime listening mode
- Individual channel soft/hard mute
- Independent channel volume and DSP bypass
- I^2S input data interface
- Input and output channel mapping
- Automatic invalid input-detect mute
- Up to 8 user-programmable biquads/channel
- Three coefficient banks for storing EQ presets with fast recall via I^2C interface
- Bass/treble tones and de-emphasis control
- Selectable high-pass filter for DC blocking
- Advanced AM interference frequency switching and noise suppression modes
- Selectable high- or low-bandwidth noise-shaping topologies
- Selectable clock input ratio
- 96-kHz internal processing sample rate
- Thermal overload and short-circuit protection technology
- Video apps: 576 x f_S input mode supported
- Pin and SW compatible with STA333BW, STA339BW, STA559BW and STA559BWS

Table 1. Device summary

Order code	Package	Packaging
STA339BWS	PowerSSO-36 EPD	Tube
STA339BWS13TR	PowerSSO-36 EPD	Tape and reel

This is information on a product in full production. www.st.com

Contents

1 **Description 8**

2 **Pin connections 10**

2.1 Connection diagram 10

2.2 Pin description 10

3 **Electrical specifications 12**

3.1 Absolute maximum ratings 12

3.2 Thermal data 12

3.3 Recommended operating conditions 13

3.4 Electrical specifications for the digital section 13

3.5 Electrical specifications for the power section 14

3.6 Power on/off sequence 16

4 **Serial audio interface 17**

4.0.1 Timings 17

4.0.2 Delay serial clock enable 17

4.0.3 Channel input mapping 17

5 **Processing data paths 18**

6 **I^2C bus specification 20**

6.1 Communication protocol 20

6.1.1 Data transition or change 20

6.1.2 Start condition 20

6.1.3 Stop condition 20

6.1.4 Data input 20

6.2 Device addressing 20

6.3 Write operation 21

6.3.1 Byte write 21

6.3.2 Multi-byte write 21

6.4 Read operation 21

6.4.1 Current address byte read 21

6.4.2 Current address multi-byte read 21
6.4.3 Random address byte read 21
6.4.4 Random address multi-byte read 22

7 Register description 23
7.1 Configuration registers (addr 0x00 to 0x05) 25
7.1.1 Configuration register A (addr 0x00) 25
7.1.2 Configuration register B (addr 0x01) 27
7.1.3 Configuration register C (addr 0x02) 30
7.1.4 Configuration register D (addr 0x03) 31
7.1.5 Configuration register E (addr 0x04) 33
7.1.6 Configuration register F (addr 0x05) 35
7.2 Volume control registers (addr 0x06 - 0x0A) 44
7.2.1 Mute/line output configuration register (addr 0x06) 45
7.2.2 Master volume register (addr 0x07) 45
7.2.3 Channel 1 volume (addr 0x08) 45
7.2.4 Channel 2 volume (addr 0x09) 45
7.2.5 Channel 3 / line output volume (addr 0x0A) 46
7.3 Audio preset registers (addr 0x0B and 0x0C) 47
7.3.1 Audio preset register 1 (addr 0x0B) 47
7.3.2 Audio preset register 2 (addr 0x0C) 47
7.4 Channel configuration registers (addr 0x0E - 0x10) 49
7.5 Tone control register (addr 0x11) 51
7.6 Dynamic control registers (addr 0x12 - 0x15) 51
7.6.1 Limiter 1 attack/release rate (addr 0x12) 51
7.6.2 Limiter 1 attack/release threshold (addr 0x13) 51
7.6.3 Limiter 2 attack/release rate (addr 0x14) 52
7.6.4 Limiter 2 attack/release threshold (addr 0x15) 52
7.6.5 Description 52
7.6.6 Limiter 1 extended attack threshold (addr 0x32) 56
7.6.7 Limiter 1 extended release threshold (addr 0x33) 57
7.6.8 Limiter 2 extended attack threshold (addr 0x34) 57
7.6.9 Limiter 2 extended release threshold (addr 0x35) 57
7.7 User-defined coefficient control registers (addr 0x16 - 0x26) 57
7.7.1 Coefficient address register (addr 0x16) 57
7.7.2 Coefficient b1 data register bits (addr 0x17 - 0x19) 57

7.7.3 Coefficient b2 data register bits (addr 0x1A - 0x1C) . . . 58
7.7.4 Coefficient a1 data register bits (addr 0x1D - 0x1F) . . . 58
7.7.5 Coefficient a2 data register bits (addr 0x20 - 0x22) . . . 58
7.7.6 Coefficient b0 data register bits (addr 0x23 - 0x25) . . . 59
7.7.7 Coefficient read/write control register (addr 0x26) . . . 59
7.7.8 Description . . . 59
7.7.9 Thermal warning and overcurrent adjustment (TWOCL) . . . 63
7.8 Variable max power correction registers (addr 0x27 - 0x28) . . . 64
7.9 Distortion compensation registers (addr 0x29 - 0x2A) . . . 64
7.10 Fault detect recovery constant registers (addr 0x2B - 0x2C) . . . 64
7.11 Device status register (addr 0x2D) . . . 65
7.12 EQ coefficients and DRC configuration register (addr 0x31) . . . 66
7.13 Extended configuration register (addr 0x36) . . . 67
7.13.1 Dual-band DRC (B^2DRC) . . . 67
7.13.2 EQ DRC mode . . . 68
7.14 Soft volume configuration registers (addr 0x37 - 0x38) . . . 70
7.15 DRC RMS filter coefficients (addr 0x39-0x3E) . . . 71

8 Applications . . . 72
8.1 Application schematics . . . 72
8.2 PLL filter circuit . . . 74
8.3 Typical output configuration . . . 74

9 Package thermal characteristics . . . 75

10 Package mechanical data . . . 76

11 Revision history . . . 78

List of tables

Table 1. Device summary . . . 1
Table 2. Pin description . . . 10
Table 3. Absolute maximum ratings . . . 12
Table 4. Thermal data . . . 12
Table 5. Recommended operating condition . . . 13
Table 6. Electrical specifications - digital section (T_{amb} = 25 °C) . . . 13
Table 7. Electrical specifications - power section . . . 14
Table 8. Timing parameters for slave mode . . . 17
Table 9. Register summary . . . 23
Table 10. Master clock select . . . 25
Table 11. Input sampling rates . . . 25
Table 12. Internal interpolation ratio . . . 25
Table 13. IR bit settings as a function of input sample rate . . . 26
Table 14. Thermal warning recovery bypass . . . 26
Table 15. Thermal warning adjustment bypass . . . 26
Table 16. Fault detect recovery bypass . . . 27
Table 17. Serial audio input interface . . . 27
Table 18. Serial data first bit . . . 27
Table 19. Support serial audio input formats for MSB-first (SAIFB = 0) . . . 28
Table 20. Supported serial audio input formats for LSB-first (SAIFB = 1) . . . 28
Table 21. Delay serial clock enable . . . 29
Table 22. Channel input mapping . . . 30
Table 23. FFX power output mode . . . 30
Table 24. FFX compensating pulse size bits . . . 30
Table 25. Compensating pulse size . . . 31
Table 26. Overcurrent warning bypass . . . 31
Table 27. High-pass filter bypass . . . 31
Table 28. De-emphasis . . . 32
Table 29. DSP bypass . . . 32
Table 30. Postscale link . . . 32
Table 31. Biquad coefficient link . . . 32
Table 32. Dynamic range compression/anticlipping bit . . . 32
Table 33. Zero-detect mute enable . . . 33
Table 34. Submix mode enable . . . 33
Table 35. Max power correction variable . . . 33
Table 36. Max power correction . . . 33
Table 37. Noise-shaper bandwidth selection . . . 34
Table 38. AM mode enable . . . 34
Table 39. PWM speed mode . . . 34
Table 40. Distortion compensation variable enable . . . 34
Table 41. Zero-crossing volume enable . . . 35
Table 42. Soft volume update enable . . . 35
Table 43. Output configuration . . . 35
Table 44. Output configuration engine selection . . . 36
Table 45. Invalid input detect mute enable . . . 43
Table 46. Binary output mode clock loss detection . . . 43
Table 47. LRCK double trigger protection . . . 43
Table 48. Auto EAPD on clock loss . . . 43

Table 49. IC power down . . . 43
Table 50. External amplifier power down . . . 44
Table 51. Line output configuration . . . 45
Table 52. Master volume offset as a function of MVOL[7:0] . . . 45
Table 53. Channel volume as a function of CxVOL[7:0] . . . 46
Table 54. Audio preset gain compression/limiters selection for AMGC[3:2] = 00 . . . 47
Table 55. AM interference frequency switching bits . . . 47
Table 56. Audio preset AM switching frequency selection . . . 47
Table 57. Bass management crossover . . . 48
Table 58. Bass management crossover frequency . . . 48
Table 59. Tone control bypass . . . 49
Table 60. EQ bypass . . . 49
Table 61. Volume bypass register . . . 49
Table 62. Binary output enable registers . . . 50
Table 63. Channel limiter mapping as a function of CxLS bits . . . 50
Table 64. Channel output mapping as a function of CxOM bits . . . 50
Table 65. Tone control boost/cut as a function of BTC and TTC bits . . . 51
Table 66. Limiter attack rate vs LxA bits . . . 53
Table 67. Limiter release rate vs LxR bits . . . 54
Table 68. Limiter attack threshold vs LxAT bits (AC mode) . . . 54
Table 69. Limiter release threshold vs LxRT bits (AC mode) . . . 55
Table 70. Limiter attack threshold vs LxAT bits (DRC mode) . . . 55
Table 71. Limiter release threshold vs LxRT bits (DRC mode) . . . 56
Table 72. RAM block for biquads, mixing, scaling, bass management . . . 61
Table 73. Status register bits . . . 65
Table 74. EQ RAM select . . . 66
Table 75. Anticlipping and DRC preset . . . 66
Table 76. Anticlipping selection for AMGC[3:2] = 01 . . . 66
Table 77. Bit PS48DB description . . . 69
Table 78. Bit XAR1 description . . . 69
Table 79. Bit XAR2 description . . . 69
Table 80. Bit BQ5 description . . . 70
Table 81. Bit BQ6 description . . . 70
Table 82. Bit BQ7 description . . . 70
Table 83. Bit SVUPE description . . . 70
Table 84. Bit SVDWE description . . . 71
Table 85. PowerSSO-36 EPD dimensions . . . 76
Table 86. Document revision history . . . 78

List of figures

Figure 1. Block diagram . . . 8
Figure 2. Pin connection PowerSSO-36 (top view) . . . 10
Figure 3. Test circuit . . . 15
Figure 4. Power-on sequence . . . 16
Figure 5. Power-off sequence for pop-free turn-off . . . 16
Figure 6. Timing diagram for SAI interface . . . 17
Figure 7. Left and right processing, section 1 . . . 18
Figure 8. Left and right processing, section 2 . . . 19
Figure 9. Write mode sequence . . . 21
Figure 10. Read mode sequence . . . 22
Figure 11. OCFG = 00 (default value) . . . 36
Figure 12. OCFG = 01 . . . 37
Figure 13. OCFG = 10 . . . 37
Figure 14. OCFG = 11 . . . 37
Figure 15. Output mapping scheme . . . 38
Figure 16. 2.0 channels (OCFG = 00) PWM slots . . . 39
Figure 17. 2.1 channels (OCFG = 01) PWM slots . . . 40
Figure 18. 2.1 channels (OCFG = 10) PWM slots . . . 41
Figure 19. Basic limiter and volume flow diagram . . . 52
Figure 20. B^2DRC scheme . . . 67
Figure 21. EQDRC scheme . . . 69
Figure 22. Application circuit for 2 or 2.1-channel configuration . . . 72
Figure 23. Application circuit for mono BTL configuration . . . 73
Figure 24. Output configuration for stereo BTL mode (R_L = 8 Ω) . . . 74
Figure 25. PowerSSO-36 power derating curve . . . 75
Figure 26. PowerSSO-36 EPD outline drawing . . . 77

1 Description

The STA339BWS is an integrated solution of digital audio processing, digital amplifier controls and power output stage to create a high-power single-chip FFX digital amplifier with high quality and high efficiency. Three channels of FFX processing are provided. The FFX processor implements the ternary, binary and binary differential processing capabilities of the full FFX processor.

The STA339BWS is part of the Sound Terminal® family that provides full digital audio streaming to the speakers and offers cost effectiveness, low power dissipation and sound enrichment.

Also provided in the STA339BWS are a full assortment of digital processing features. This includes up to 8 programmable biquads (EQ) per channel. Available presets enable a time-to-market advantage by substantially reducing the amount of software development needed for functions such as audio preset volume loudness, preset volume curves and preset EQ settings. There are also new advanced AM radio interference reduction modes. Dual-band DRC dynamically equalizes the system to provide linear frequency speaker response regardless of output power level. This feature separates the audio frequency band into two sub-bands independently processed to provide better sound clarity and to avoid speaker saturation.

The serial audio data input interface accepts all possible formats, including the popular I²S format. The high-quality conversion from PCM audio to FFX PWM switching provides over 100 dB of SNR and of dynamic range.

Figure 1. Block diagram

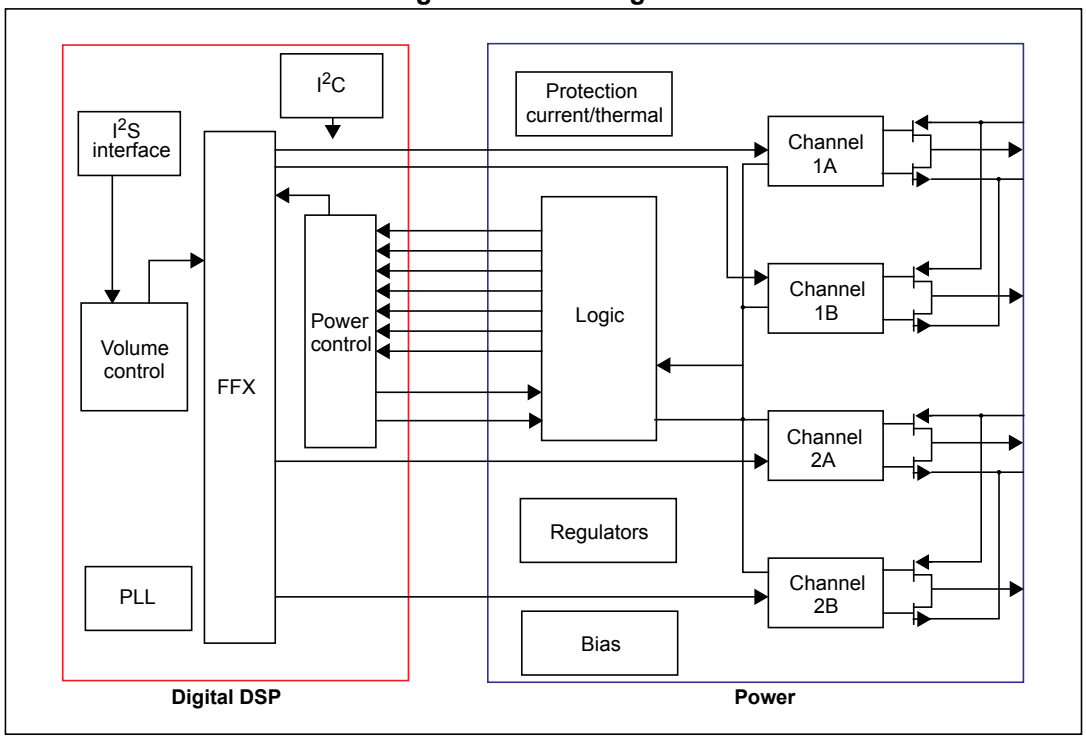

The power section consists of four independent half-bridges. These can be configured via digital control to operate in different modes.

- 2.1 channels can be provided by two half bridges and a single full bridge, supplying up to 2 x 9 W + 1 x 20 W of output power.
- Two channels can be provided by two full-bridges, supplying up to 2 x 20 W of output power.
- The IC can also be configured as 2.1 channels with 2 x 20 W supplied by the device plus a drive for an external FFX power amplifier, such as STA533WF or STA515W.
- One channel can be provided by parallel BTL to obtain 1 x 40 W of output power. In this configuration the CONFIG pin must be connected to VDD.

2 Pin connections

2.1 Connection diagram

Figure 2. Pin connection PowerSSO-36 (top view)

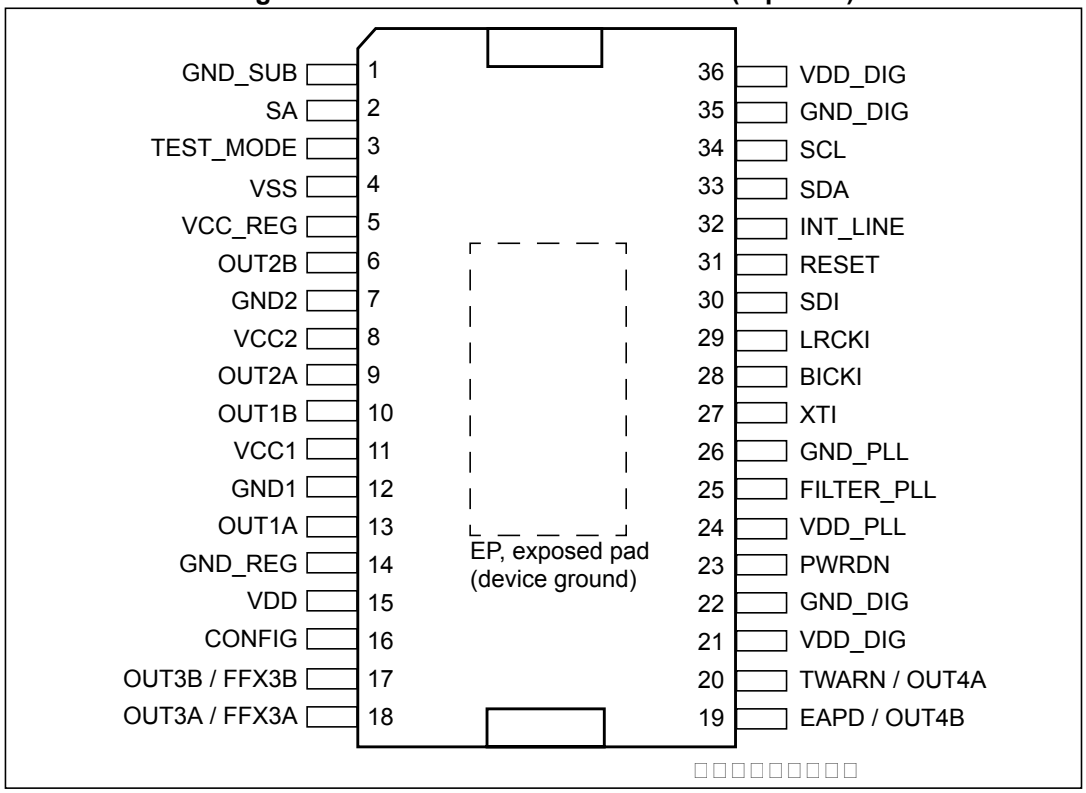

2.2 Pin description

Table 2. Pin description

Pin	Type	Name	Description
1	GND	GND_SUB	Substrate ground
2	I	SA	I^2C select address (pull-down)
3	I	TEST_MODE	This pin must be connected to ground (pull-down)
4	I/O	VSS	Internal reference at V_{CC} - 3.3 V
5	I/O	VCC_REG	Internal V_{CC} reference
6	O	OUT2B	Output half-bridge channel 2B
7	GND	GND2	Power negative supply
8	Power	VCC2	Power positive supply
9	O	OUT2A	Output half-bridge channel 2A
10	O	OUT1B	Output half-bridge channel 1B

Table 2. Pin description (continued)

Pin	Type	Name	Description
11	Power	VCC1	Power positive supply
12	GND	GND1	Power negative supply
13	O	OUT1A	Output half-bridge channel 1A
14	GND	GND_REG	Internal ground reference
15	Power	VDD	Internal 3.3 V reference voltage
16	I	CONFIG	Parallel mode command
17	O	OUT3B / FFX3B	PWM out channel 3B / external bridge driver
18	O	OUT3A / FFX3A	PWM out channel 3A / external bridge driver
19	O	EAPD / OUT4B	Power down for external bridge / PWM out channel 4B
20	I/O	TWARN / OUT4A	Thermal warning from external bridge (pull-up when input) / PWM out channel 4A
21	Power	VDD_DIG	Digital supply voltage
22	GND	GND_DIG	Digital ground
23	I	PWRDN	Power down (pull-up)
24	Power	VDD_PLL	Positive supply for PLL
25	I	FILTER_PLL	Connection to PLL filter
26	GND	GND_PLL	Negative supply for PLL
27	I	XTI	PLL input clock
28	I	BICKI	I^2S serial clock
29	I	LRCKI	I^2S left/right clock
30	I	SDI	I^2S serial data channels 1 and 2
31	I	RESET	Reset (pull-up)
32	O	INT_LINE	Fault interrupt
33	I/O	SDA	I^2C serial data
34	I	SCL	I^2C serial clock
35	GND	GND_DIG	Digital ground
36	Power	VDD_DIG	Digital supply voltage
-	-	EP	Exposed pad for PCB heatsink, to be connected to GND

3 Electrical specifications

3.1 Absolute maximum ratings

Table 3. Absolute maximum ratings

Symbol	Parameter	Min	Typ	Max	Unit
V_{CC}	Power supply voltage (pins VCCx)	-0.3	-	24	V
V_{DD}	Digital supply voltage (pins VDD_DIG)	-0.3	-	4.0	V
V_{DD}	PLL supply voltage (pin VDD_PLL)	-0.3	-	4.0	V
T_{op}	Operating junction temperature	-20	-	150	°C
T_{stg}	Storage temperature	-40	-	150	°C

Warning: **Stresses beyond those listed in *Table 3* above may cause permanent damage to the device. These are stress ratings only, and functional operation of the device at these or any other conditions beyond those indicated under "Recommended operating conditions" are not implied. Exposure to absolute-maximum-rated conditions for extended periods may affect device reliability. In the real application, power supplies with nominal values rated within the recommended operating conditions, may experience some rising beyond the maximum operating conditions for a short time when no or very low current is sinked (amplifier in mute state). In this case the reliability of the device is guaranteed, provided that the absolute maximum ratings are not exceeded.**

3.2 Thermal data

Table 4. Thermal data

	Parameter	Min	Typ	Max	Unit
$R_{th\ j\text{-}case}$	Thermal resistance junction-case (thermal pad)	-	-	1.5	°C/W
T_{th_sdj}	Thermal shut-down junction temperature	-	150	-	°C
T_{th_warn}	Thermal warning temperature	-	130	-	°C
T_{th_sdh}	Thermal shut-down hysteresis	-	20	-	°C
$R_{th\ j\text{-}amb}$	Thermal resistance junction-ambient (1)	-	24	-	°C/W

1. See *Chapter 9: Package thermal characteristics on page 75* for details.

3.3 Recommended operating conditions

Table 5. Recommended operating condition

Symbol	Parameter	Min	Typ	Max	Unit
V_{CC}	Power supply voltage (VCCxA, VCCxB)	4.5	-	21.5	V
V_{DD_DIG}	Digital supply voltage	2.7	3.3	3.6	V
V_{DD_PLL}	PLL supply voltage	2.7	3.3	3.6	V
T_{amb}	Ambient temperature	-20	-	70	°C

3.4 Electrical specifications for the digital section

Table 6. Electrical specifications - digital section (T_{amb} = 25 °C)

Symbol	Parameter	Conditions	Min	Typ	Max	Unit
I_{il}	Low level input current without pull-up/down device	Vi = 0 V	-	-	1	µA
I_{ih}	High level input current without pull-up/down device	Vi = VDD_DIG = 3.6 V	-	-	1	µA
V_{il}	Low level input voltage	-	-	-	0.2 * VDD_DIG	V
V_{ih}	High level input voltage	-	0.8 * VDD_DIG	-	-	V
V_{ol}	Low level output voltage	Iol = 2 mA		-	0.4 * VDD_DIG	V
V_{oh}	High level output voltage	Ioh = 2 mA	0.8 * VDD_DIG	-	-	V
R_{pu}	Equivalent pull-up/down resistance	-	-	50	-	kΩ

3.5 Electrical specifications for the power section

The specifications given in this section are valid for the operating conditions: V_{CC} = 18 V, f = 1 kHz, f_{sw} = 384 kHz, T_{amb} = 25 °C and R_L = 8 Ω, unless otherwise specified.

Table 7. Electrical specifications - power section

Symbol	Parameter	Conditions	Min	Typ	Max	Unit
Po	Output power BTL	THD = 1%	-	16	-	W
		THD = 10%	-	20	-	
	Output power SE	THD = 1%,R_L= 4 Ω	-	7	-	W
		THD = 10%,R_L= 4 Ω	-	9	-	
R_{dsON}	Power P-channel or N-channel MOSFET	I_d = 0.75 A	-	-	250	mΩ
gP	Power P-channel RdsON matching	I_d = 0.75 A	-	100	-	%
gN	Power N-channel RdsON matching	I_d = 0.75 A	-	100	-	%
Idss	Power P-channel/N-channel leakage	V_{CC} = 20 V	-	-	1	µA
t_r	Rise time	Resistive load, see *Figure 3* below	-	-	10	ns
t_f	Fall time		-	-	10	ns
I_{VCC}	Supply current from V_{CC} in power down	PWRDN = 0	-	0.3	-	µA
	Supply current from V_{CC} in operation	PWRDN = 1	-	15	-	mA
I_{VDD}	Supply current FFX processing	Internal clock = 49.152 MHz	-	55	-	mA
I_{LIM}	Overcurrent limit	(1)	2.5	3.0	-	A
I_{SCP}	Short -circuit protection	R_L = 0 Ω	3.0	3.6	-	A
V_{UVP}	Undervoltage protection	-	-	-	4.3	V
t_{min}	Output minimum pulse width	No load	20	40	60	ns
DR	Dynamic range	-	-	100	-	dB
SNR	Signal to noise ratio, ternary mode	A-Weighted	-	100	-	dB
	Signal to noise ratio binary mode	-	-	90	-	dB
THD+N	Total harmonic distortion + noise	FFX stereo mode, Po = 1 W f = 1 kHz	-	0.2	-	%
X_{TALK}	Crosstalk	FFX stereo mode, <5 kHz One channel driven at 1 W, other channel measured	-	80	-	dB
η	Peak efficiency, FFX mode	Po = 2 x 20 W into 8 Ω	-	90	-	%
	Peak efficiency, binary modes	Po = 2 x 9 W into 4 Ω + 1 x 20 W into 8 Ω	-	87	-	

1. Limit the current if overcurrent warning detect adjustment bypass is enabled (register bit CONFC.OCRB *on page 31*). When disabled refer to the I_{SCP}.

Figure 3. Test circuit

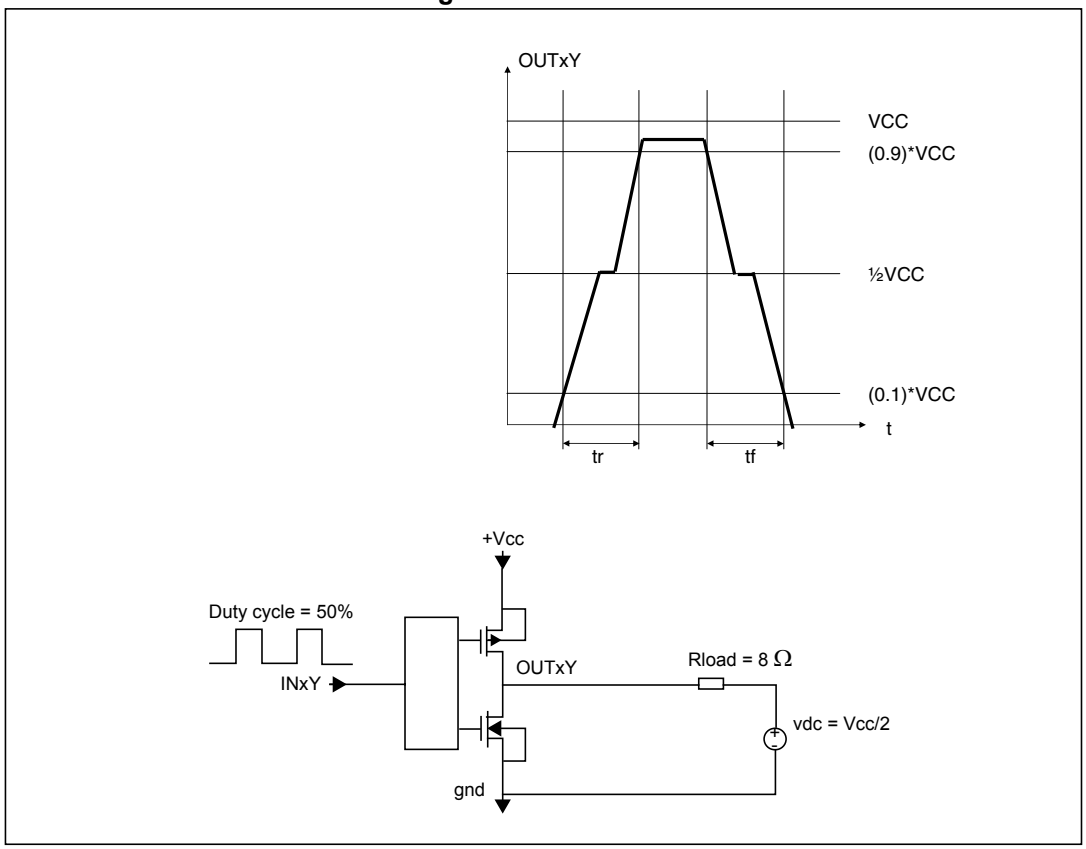

3.6 Power on/off sequence

Figure 4. Power-on sequence

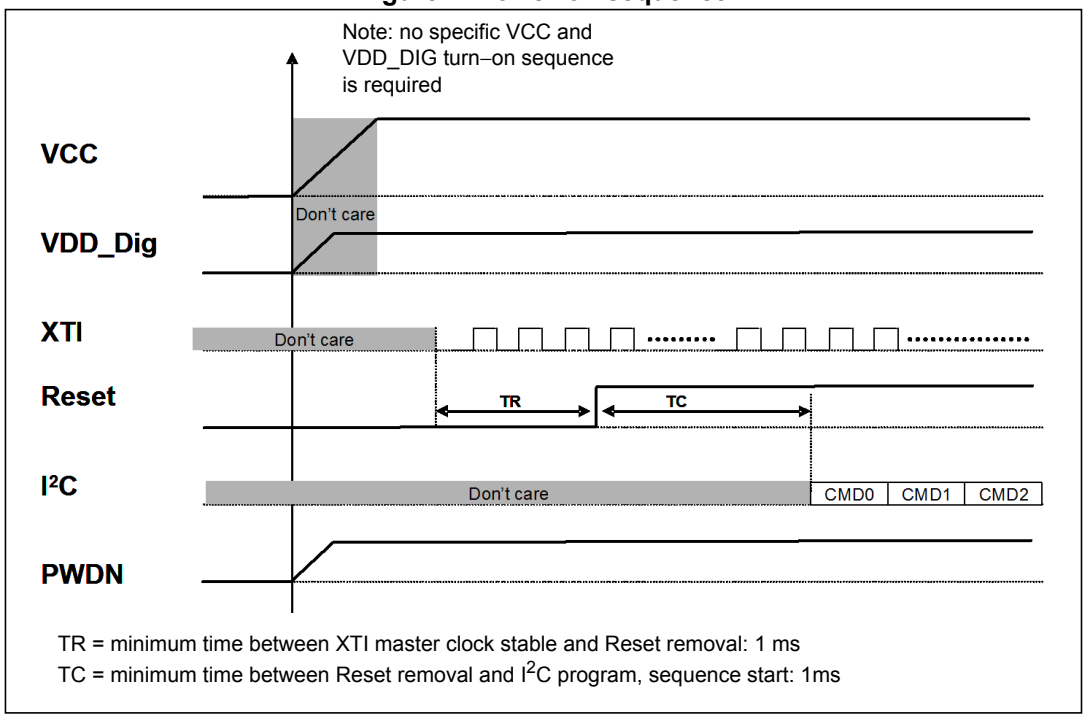

Note: The definition of a stable clock is when f_{max} - f_{min} < 1 MHz.

Section *Serial audio input interface format on page 27* gives information on setting up the I^2S interface.

Figure 5. Power-off sequence for pop-free turn-off

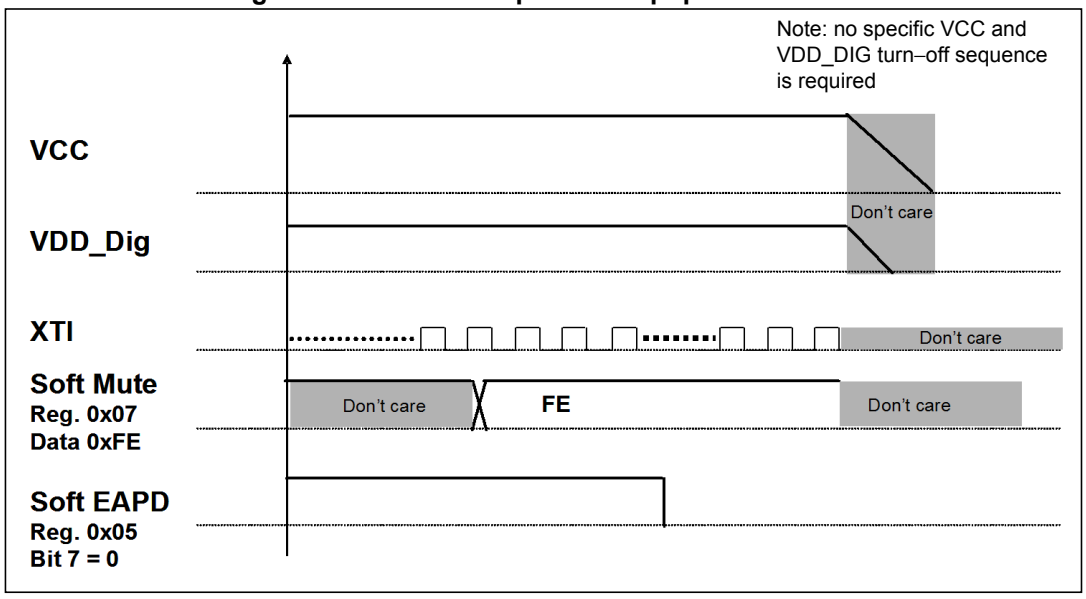

4 Serial audio interface

The STA339BWS audio serial input interface was designed to interface with standard digital audio components and to accept a number of serial data formats. The STA339BWS always acts as the slave when receiving audio input from standard digital audio components. Serial data for two channels is provided using three inputs: left/right clock LRCKI, serial clock BICKI, and serial data SDI12.

The SAI bit and the SAIFB bit are used to specify the serial data format. The default serial data format is I^2S, MSB-first.

4.0.1 Timings

In the STA339BWS the BICKI and LRCKI pins are configured as inputs and they must be supplied by the external peripheral.

Figure 6. Timing diagram for SAI interface

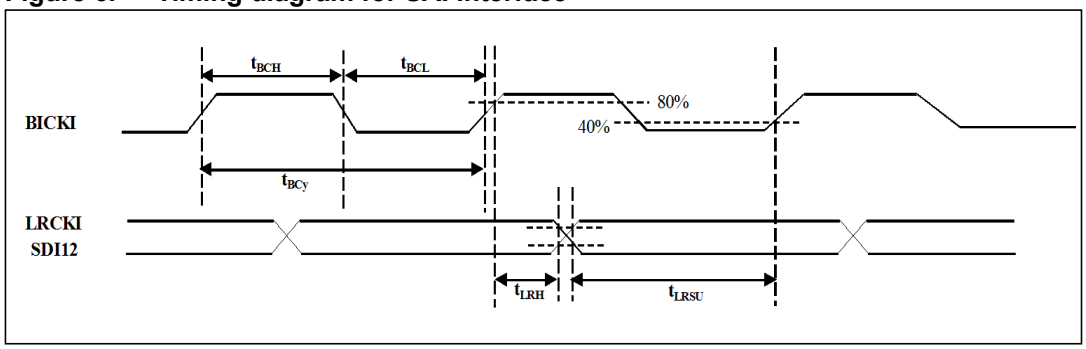

Table 8. Timing parameters for slave mode

Symbol	Parameter	Min	Typ	Max	Unit
t_{BCy}	BICK cycle time	80	-	-	ns
t_{BCH}	BICK pulse width high	40	-	-	ns
t_{BCL}	BICK pulse width low	40	-	-	ns
t_{LRSU}	LRCKI setup time to BICKI strobing edge	40	-	-	ns
t_{LRH}	LRCKI hold time to BICKI strobing edge	40	-	-	ns
t_{LRJT}	LRCKI Jitter Tolerance			40	ns

4.0.2 Delay serial clock enable

To tolerate anomalies in some I^2S master devices, a PLL clock cycle delay can be added to the BICKI signal before the SAI interface.

4.0.3 Channel input mapping

Each channel received via I^2S can be mapped to any internal processing channel via the channel input mapping registers. This allows for flexibility in processing. The default settings of these registers map each I^2S input channel to its corresponding processing channel.

5 Processing data paths

Figure 7 and *Figure 8* below show the data processing paths inside STA339BWS. The whole processing chain is composed of two consecutive sections. In the first one, dual-channel processing is implemented and in the second section each channel is fed into the post-mixing block either to generate a third channel (typically used in 2.1 output configuration and with crossover filters enabled) or to have the channels processed by the dual-band DRC block (2.0 output configuration with crossover filters used to define the cut-off frequency of the two bands).

The first section, *Figure 7*, begins with a 2x oversampling FIR filter providing 2 * f_S audio processing. Then a selectable high-pass filter removes the DC level (enabled if HPB = 0). The left and right channel processing paths can include up to 8 filters, depending on the selected configuration (bits BQL, BQ5, BQ6, BQ7 and XO[3:0]). By default, four user programmable, independent filters per channel are enabled, plus the preconfigured de-emphasis, bass and treble controls (BQL = 0, BQ5 = 0, BQ6 = 0, BQ7 = 0).

If the coefficient sets for the two channels are linked (BQL = 1) it is possible to use the de-emphasis, bass and treble filters in a user defined configuration (provided the relevant BQx bits are set). In this case both channels use the same processing coefficients and can have up to seven filters each. If BQL = 0 the BQx bits are ignored and the fifth, sixth and seventh filters are configured as de-emphasis, bass and treble controls, respectively.

Figure 7. Left and right processing, section 1

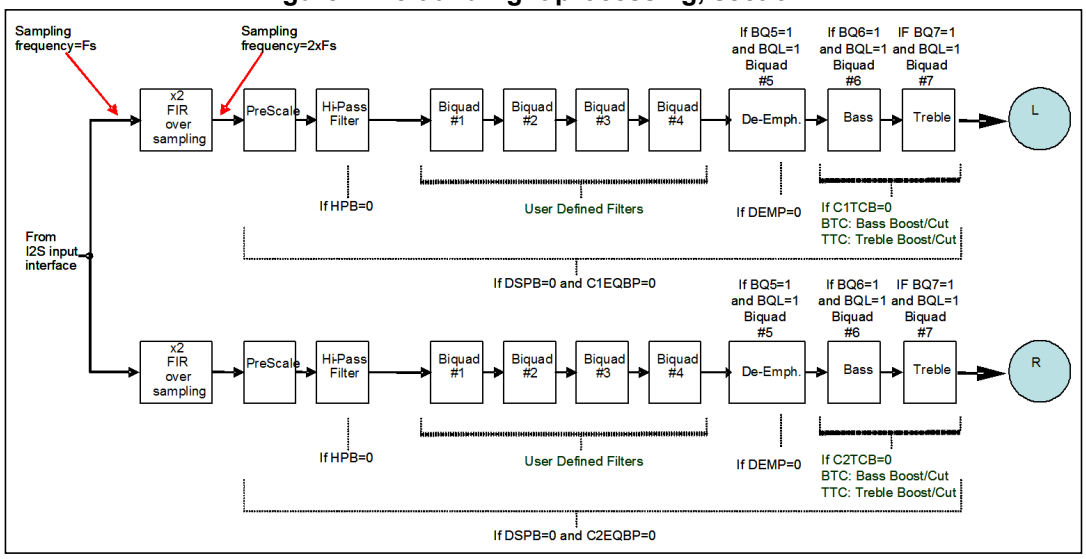

Moreover, the common 8th filter can be available on both channels provided the predefined crossover frequencies are not used, XO[3:0] = 0, and the dual-band DRC is not used.

In the second section, *Figure 8*, mixing and crossover filters are available. If B^2DRC is not enabled they are fully user-programmable and allow the generation of a third channel (2.1 outputs). Alternatively, in mode B^2DRC, these blocks are used to split the sub-band and define the cut-off frequencies of the two bands. A prescaler and a final postscaler allow full control over the signal dynamics before and after the filtering stages. A mixer function is also available.

Figure 8. Left and right processing, section 2

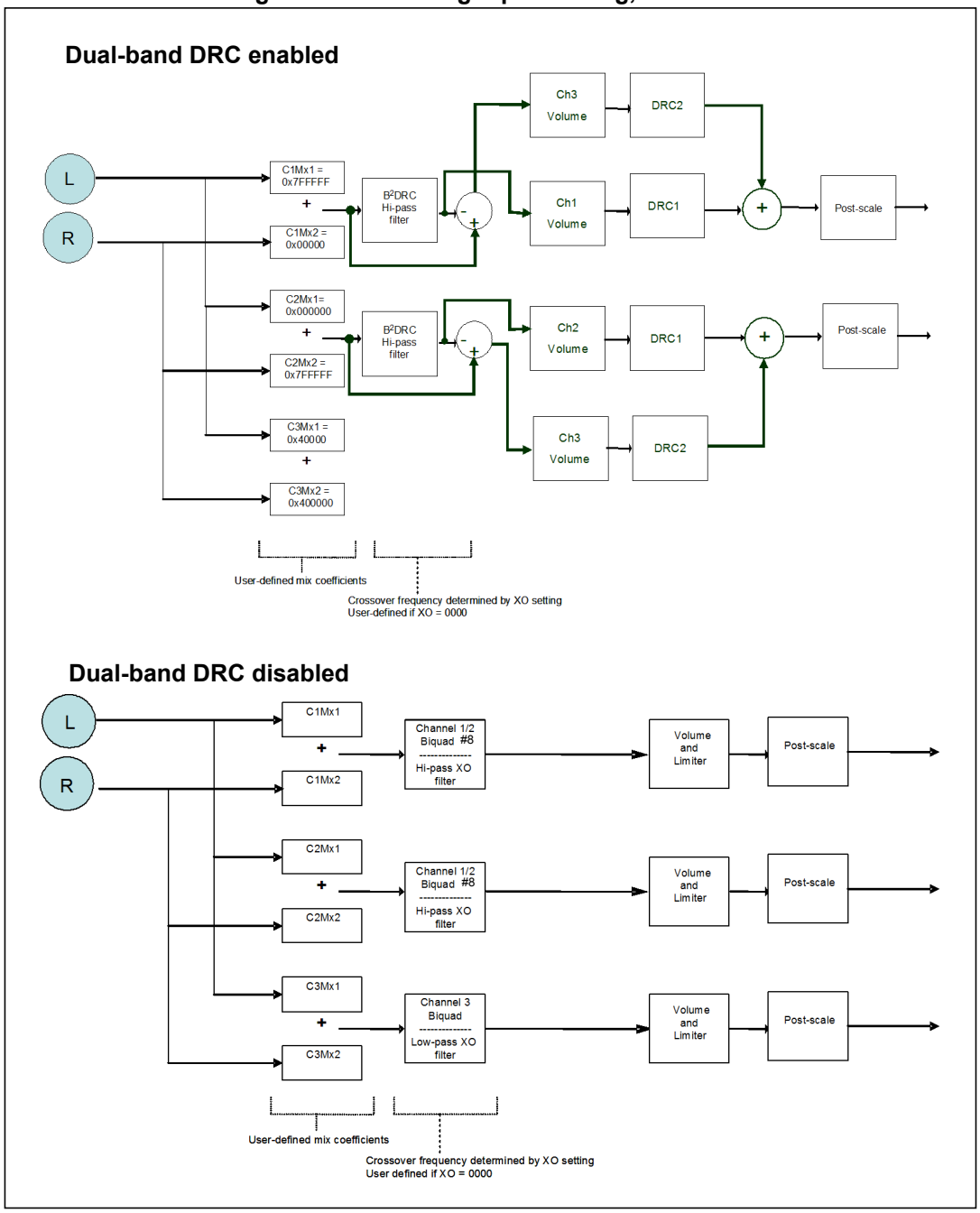

6 I²C bus specification

The STA339BWS supports the I²C protocol via the input ports SCL and SDA_IN (master to slave) and the output port SDA_OUT (slave to master). This protocol defines any device that sends data on to the bus as a transmitter and any device that reads the data as a receiver. The device that controls the data transfer is known as the master and the other as the slave. The master always starts the transfer and provides the serial clock for synchronization. The STA339BWS is always a slave device in all of its communications. It supports up to 400 kb/s (fast-mode bit rate).

For correct operation of the I²C interface ensure that the master clock generated by the PLL has a frequency at least 10 times higher than the frequency of the applied SCL clock.

6.1 Communication protocol

6.1.1 Data transition or change

Data changes on the SDA line must only occur when the clock SCL is low. A SDA transition while the clock is high is used to identify a START or STOP condition.

6.1.2 Start condition

START is identified by a high to low transition of the data bus, SDA, while the clock, SCL, is stable in the high state. A START condition must precede any command for data transfer.

6.1.3 Stop condition

STOP is identified by low to high transition of SDA while SCL is stable in the high state. A STOP condition terminates communication between STA339BWS and the bus master.

6.1.4 Data input

During the data input the STA339BWS samples the SDA signal on the rising edge of SCL. For correct device operation the SDA signal must be stable during the rising edge of the clock and the data can change only when the SCL line is low.

6.2 Device addressing

To start communication between the master and the STA339BWS, the master must initiate with a start condition. Following this, the master sends onto the SDA line 8-bits (MSB first) corresponding to the device select address and read or write mode bit.

The seven most significant bits are the device address identifiers, corresponding to the I²C bus definition. In the STA339BWS the I²C interface has two device addresses depending on the SA pin configuration, 0x38 when SA = 0, and 0x3A when SA = 1.

The eighth bit (LSB) identifies a read or write operation (R/W); this is set to 1 for read and to 0 for write. After a START condition the STA339BWS identifies the device address on the SDA bus and if a match is found, acknowledges the identification during the 9th bit time frame. The byte following the device identification is the address of a device register.

6.3 Write operation

Following the START condition the master sends a device select code with the RW bit set to 0. The STA339BWS acknowledges this and then waits for the byte of internal address. After receiving the internal byte address the STA339BWS again responds with an acknowledgement.

6.3.1 Byte write

In the byte write mode the master sends one data byte, this is acknowledged by the STA339BWS. The master then terminates the transfer by generating a STOP condition.

6.3.2 Multi-byte write

The multi-byte write modes can start from any internal address. The master generating a STOP condition terminates the transfer.

Figure 9. Write mode sequence

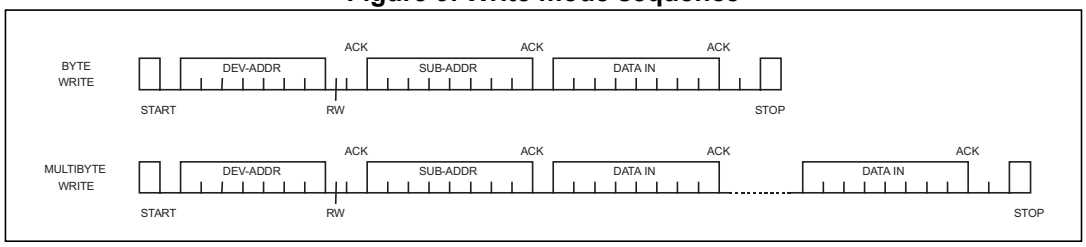

6.4 Read operation

6.4.1 Current address byte read

Following the START condition the master sends a device select code with the RW bit set to 1. The STA339BWS acknowledges this and then responds by sending one byte of data. The master then terminates the transfer by generating a STOP condition.

6.4.2 Current address multi-byte read

The multi-byte read modes can start from any internal address. Sequential data bytes are read from sequential addresses within the STA339BWS. The master acknowledges each data byte read and then generates a STOP condition terminating the transfer.

6.4.3 Random address byte read

Following the START condition the master sends a device select code with the RW bit set to 0. The STA339BWS acknowledges this and then the master writes the internal address byte. After receiving, the internal byte address the STA339BWS again responds with an acknowledgement. The master then initiates another START condition and sends the device select code with the RW bit set to 1. The STA339BWS acknowledges this and then responds by sending one byte of data. The master then terminates the transfer by generating a STOP condition.

6.4.4 Random address multi-byte read

The multi-byte read modes could start from any internal address. Sequential data bytes are read from sequential addresses within the STA339BWS. The master acknowledges each data byte read and then generates a STOP condition terminating the transfer.

Figure 10. Read mode sequence

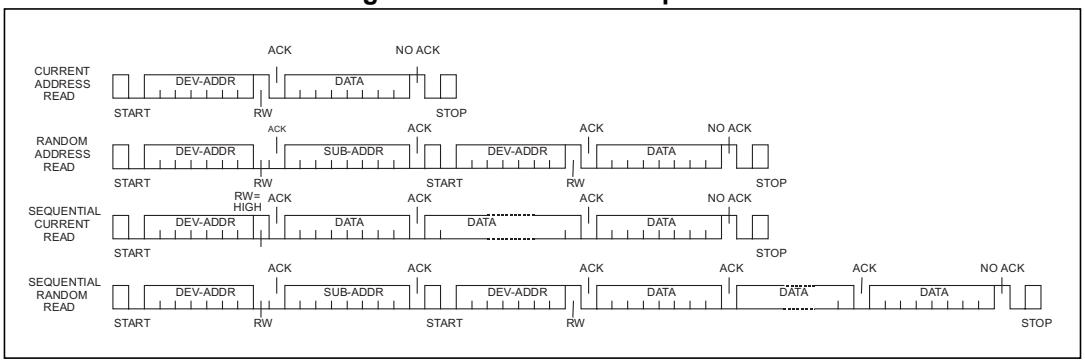

7 Register description

Note: Addresses exceeding the maximum address number must not be written.

Table 9. Register summary

Addr	Name	D7	D6	D5	D4	D3	D2	D1	D0
0x00	CONFA	FDRB	TWAB	TWRB	IR1	IR0	MCS2	MCS1	MCS0
0x01	CONFB	C2IM	C1IM	DSCKE	SAIFB	SAI3	SAI2	SAI1	SAI0
0x02	CONFC	OCRB	Reserved	CSZ3	CSZ2	CSZ1	CSZ0	OM1	OM0
0x03	CONFD	SME	ZDE	DRC	BQL	PSL	DSPB	DEMP	HPB
0x04	CONFE	SVE	ZCE	DCCV	PWMS	AME	NSBW	MPC	MPCV
0x05	CONFF	EAPD	PWDN	ECLE	LDTE	BCLE	IDE	OCFG1	OCFG0
0x06	MUTELOC	LOC1	LOC0	Reserved	Reserved	C3M	C2M	C1M	Reserved
0x07	MVOL	MVOL[7:0]							
0x08	C1VOL	C1VOL[7:0]							
0x09	C2VOL	C2VOL[7:0]							
0x0A	C3VOL	C3VOL[7:0]							
0x0B	AUTO1	Reserved	Reserved	AMGC[1:0]		Reserved	Reserved	Reserved	Reserved
0x0C	AUTO2	XO3	XO2	XO1	XO0	AMAM2	AMAM1	AMAM0	AMAME
0x0D	AUTO3	Reserved							
0x0E	C1CFG	C1OM1	C1OM0	C1LS1	C1LS0	C1BO	C1VBP	C1EQBP	C1TCB
0x0F	C2CFG	C2OM1	C2OM0	C2LS1	C2LS0	C2BO	C2VBP	C2EQBP	C2TCB
0x10	C3CFG	C3OM1	C3OM0	C3LS1	C3LS0	C3BO	C3VBP	Reserved	Reserved
0x11	TONE	TTC3	TTC2	TTC1	TTC0	BTC3	BTC2	BTC1	BTC0
0x12	L1AR	L1A3	L1A2	L1A1	L1A0	L1R3	L1R2	L1R1	L1R0
0x13	L1ATRT	L1AT3	L1AT2	L1AT1	L1AT0	L1RT3	L1RT2	L1RT1	L1RT0
0x14	L2AR	L2A3	L2A2	L2A1	L2A0	L2R3	L2R2	L2R1	L2R0
0x15	L2ATRT	L2AT3	L2AT2	L2AT1	L2AT0	L2RT3	L2RT2	L2RT1	L2RT0
0x16	CFADDR	Reserved	Reserved	CFA[5:0]					
0x17	B1CF1	C1B[23:16]							
0x18	B1CF2	C1B[15:8]							
0x19	B1CF3	C1B[7:0]							
0x1A	B2CF1	C2B[23:16]							
0x1B	B2CF2	C2B[15:8]							
0x1C	B2CF3	C2B[7:0]							
0x1D	A1CF1	C3B[23:16]							
0x1E	A1CF2	C3B[15:8]							

Table 9. Register summary (continued)

Addr	Name	D7	D6	D5	D4	D3	D2	D1	D0
0x1F	A1CF3	C3B[7:0]							
0x20	A2CF1	C4B[23:16]							
0x21	A2CF2	C4B[15:8]							
0x22	A2CF3	C4B[7:0]							
0x23	B0CF1	C5B[23:16]							
0x24	B0CF2	C5B[15:8]							
0x25	B0CF3	C5B[7:0]							
0x26	CFUD	Reserved				RA	R1	WA	W1
0x27	MPCC1	MPCC[15:8]							
0x28	MPCC2	MPCC[7:0]							
0x29	DCC1	DCC[15:8]							
0x2A	DCC2	DCC[7:0]							
0x2B	FDRC1	FDRC[15:8]							
0x2C	FDRC2	FDRC[7:0]							
0x2D	STATUS	PLLUL	FAULT	UVFAULT	Reserved	OCFAULT	OCWARN	TFAULT	TWARN
0x2E	Reserved	Reserved							
0x2F	Reserved	Reserved							
0x30	Reserved	Reserved							
0x31	EQCFG	XOB	Reserved	Reserved	AMGC[3:2]		Reserved	SEL[1:0]	
0x32	EATH1	EATHEN1	EATH1[6:0]						
0x33	ERTH1	ERTHEN1	ERTH1[6:0]						
0x34	EATH2	EATHEN2	EATH2[6:0]						
0x35	ERTH2	ERTHEN2	ERTH2[6:0]						
0x36	CONFX	MDRC[1:0]		PS48DB	XAR1	XAR2	BQ5	BQ6	BQ7
0x37	SVCA	Reserved	Reserved	SVUPE	SVUP[4:0]				
0x38	SVCB	Reserved	Reserved	SVDWE	SVDW[4:0]				
0x39	RMS0A	R_C0[23:16]							
0x3A	RMS0B	R_C0[15:8]							
0x3B	RMS0C	R_C0[7:0]							
0x3C	RMS1A	R_C1[23:16]							
0x3D	RMS1B	R_C1[15:8]							
0x3E	RMS1C	R_C1[7:0]							

7.1 Configuration registers (addr 0x00 to 0x05)

7.1.1 Configuration register A (addr 0x00)

D7	D6	D5	D4	D3	D2	D1	D0
FDRB	TWAB	TWRB	IR1	IR0	MCS2	MCS1	MCS0
0	1	1	0	0	0	1	1

Master clock select

Table 10. Master clock select

Bit	R/W	RST	Name	Description
0	R/W	1	MCS0	Selects the ratio between the input I^2S sample frequency and the input clock.
1	R/W	1	MCS1	
2	R/W	0	MCS2	

The STA339BWS supports sample rates of 32 kHz, 44.1 kHz, 48 kHz, 88.2 kHz, 96 kHz, 176.4 kHz, and 192 kHz. Therefore the internal clock is:

- 32.768 MHz for 32 kHz
- 45.1584 MHz for 44.1 kHz, 88.2 kHz, and 176.4 kHz
- 49.152 MHz for 48 kHz, 96 kHz, and 192 kHz

The external clock frequency provided to the XTI pin must be a multiple of the input sample frequency (f_s).

The relationship between the input clock and the input sample rate is determined by both the MCSx and the IR (input rate) register bits. The MCSx bits determine the PLL factor generating the internal clock and the IR bit determines the oversampling ratio used internally.

Table 11. Input sampling rates

Input sample rate *fs* (kHz)	IR	MCS[2:0]					
		101	100	011	010	001	000
32, 44.1, 48	00	576 * fs	128 * fs	256 * fs	384 * fs	512 * fs	768 * fs
88.2, 96	01	NA	64 * fs	128 * fs	192 * fs	256 * fs	384 * fs
176.4, 192	1X	NA	32 * fs	64 * fs	96 * fs	128 * fs	192 * fs

Interpolation ratio select

Table 12. Internal interpolation ratio

Bit	R/W	RST	Name	Description
4:3	R/W	00	IR [1:0]	Selects internal interpolation ratio based on input I^2S sample frequency

The STA339BWS has variable interpolation (oversampling) settings such that internal processing and FFX output rates remain consistent. The first processing block interpolates by either 2-times or 1-time (pass-through) or provides a 2-times downsample. The oversampling ratio of this interpolation is determined by the IR bits.

Table 13. IR bit settings as a function of input sample rate

Input sample rate fs (kHz)	IR	1st stage interpolation ratio
32	00	2-times oversampling
44.1	00	2-times oversampling
48	00	2-times oversampling
88.2	01	Pass-through
96	01	Pass-through
176.4	10	2-times downsampling
192	10	2-times downsampling

Thermal warning recovery bypass

Table 14. Thermal warning recovery bypass

Bit	R/W	RST	Name	Description
5	R/W	1	TWRB	0: thermal warning recovery enabled 1: thermal warning recovery disabled

This bit sets the behavior of the IC after a thermal warning disappears. If TWRB is enabled the device automatically restores the normal gain and output limiting is no longer active. If it is disabled the device keeps the output limit active until a reset is asserted or until TWRB set to 0. This bit works in conjunction with TWAB

Thermal warning adjustment bypass

Table 15. Thermal warning adjustment bypass

Bit	R/W	RST	Name	Description
6	R/W	1	TWAB	0: thermal warning adjustment enabled 1: thermal warning adjustment disabled

Bit TWAB enables automatic output limiting when a power stage thermal warning condition persists for longer than 400ms. When the feature is active (TWAB = 0) the desired output limiting, set through bit TWOCL (-3 dB by default) at address 0x37 in the RAM coefficients bank, is applied. The way the limiting acts after the warning condition disappears is controlled by bit TWRB.

Fault detect recovery bypass

Table 16. Fault detect recovery bypass

Bit	R/W	RST	Name	Description
7	R/W	0	FDRB	0: fault detect recovery enabled 1: fault detect recovery disabled

The on-chip power block provides feedback to the digital controller which is used to indicate a fault condition (either overcurrent or thermal). When fault is asserted, the power control block attempts a recovery from the fault by asserting the 3-state output, holding it for period of time in the range of 0.1 ms to 1 second, as defined by the fault-detect recovery constant register (FDRC registers 0x2B-0x2C), then toggling it back to normal condition. This sequence is repeated as log as the fault indication exists. This feature is enabled by default but can be bypassed by setting the FDRB control bit to 1. The fault condition is also asserted by a low-state pulse of the normally high INT_LINE output pin.

7.1.2 Configuration register B (addr 0x01)

D7	D6	D5	D4	D3	D2	D1	D0
C2IM	C1IM	DSCKE	SAIFB	SAI3	SAI2	SAI1	SAI0
1	0	0	0	0	0	0	0

Serial audio input interface format

Table 17. Serial audio input interface

Bit	R/W	RST	Name	Description
0	R/W	0	SAI0	Determines the interface format of the input serial digital audio interface.
1	R/W	0	SAI1	
2	R/W	0	SAI2	
3	R/W	0	SAI3	

Serial data interface

The STA339BWS audio serial input interfaces with standard digital audio components and accepts a number of serial data formats. STA339BWS always acts as slave when receiving audio input from standard digital audio components. Serial data for two channels is provided using three inputs: left/right clock LRCKI, serial clock BICKI, and serial data SDI.

Bits SAI and bit SAIFB are used to specify the serial data format. The default serial data format is I^2S, MSB first. Available formats are shown in the tables and figure that follow.

Serial data first bit

Table 18. Serial data first bit

SAIFB	Format
0	MSB-first
1	LSB-first

Table 19. Support serial audio input formats for MSB-first (SAIFB = 0)

BICKI	SAI [3:0]	SAIFB	Interface format
32 * fs	0000	0	I^2S 15-bit data
	0001	0	Left/right-justified 16-bit data
48 * fs	0000	0	I^2S 16 to 23-bit data
	0001	0	Left-justified 16 to 24-bit data
	0010	0	Right-justified 24-bit data
	0110	0	Right-justified 20-bit data
	1010	0	Right-justified 18-bit data
	1110	0	Right-justified 16-bit data
64 * fs	0000	0	I^2S 16 to 24-bit data
	0001	0	Left-justified 16 to 24-bit data
	0010	0	Right-justified 24-bit data
	0110	0	Right-justified 20-bit data
	1010	0	Right-justified 18-bit data
	1110	0	Right-justified 16-bit data

Table 20. Supported serial audio input formats for LSB-first (SAIFB = 1)

BICKI	SAI [3:0]	SAIFB	Interface Format
32 * fs	1100	1	I^2S 15-bit data
	1110	1	Left/right-justified 16-bit data
48 * fs	0100	1	I^2S 23-bit data
	0100	1	I^2S 20-bit data
	1000	1	I^2S 18-bit data
	1100	1	LSB first I^2S 16-bit data
	0001	1	Left-justified 24-bit data
	0101	1	Left-justified 20-bit data
	1001	1	Left-justified 18-bit data
	1101	1	Left-justified 16-bit data
	0010	1	Right-justified 24-bit data
	0110	1	Right-justified 20-bit data
	1010	1	Right-justified 18-bit data
	1110	1	Right-justified 16-bit data

Table 20. Supported serial audio input formats for LSB-first (SAIFB = 1) (continued)

BICKI	SAI [3:0]	SAIFB	Interface Format
64 * fs	0000	1	I^2S 24-bit data
	0100	1	I^2S 20-bit data
	1000	1	I^2S 18-bit data
	1100	1	LSB first I^2S 16-bit data
	0001	1	Left-justified 24-bit data
	0101	1	Left-justified 20-bit data
	1001	1	Left-justified 18-bit data
	1101	1	Left-justified 16-bit data
	0010	1	Right-justified 24-bit data
	0110	1	Right-justified 20-bit data
	1010	1	Right-justified 18-bit data
	1110	1	Right-justified 16-bit data

To make the STA339BWS work properly, the serial audio interface LRCKI clock must be synchronous to the PLL output clock. It means that:

- N-4< = (frequency of PLL clock) / (frequency of LRCKI) = < N+4 cycles, where N depends on the settings in *Table 13 on page 26*
- the PLL must be locked.

If these two conditions are not met, and IDE bit (register 0x05, bit 2) is set to 1, the STA339BWS immediately mutes the I^2S PCM data out (provided to the processing block) and it freezes any active processing task.

Clock desyncronization can happen during STA339BWS operation because of source switching or TV channel change. To avoid audio side effects, like click or pop noise, it is strongly recommended to complete the following actions:

1. soft volume change
2. I^2C read /write instructions

while the serial audio interface and the internal PLL are still synchronous.

Delay serial clock enable

Table 21. Delay serial clock enable

Bit	R/W	RST	Name	Description
5	R/W	0	DSCKE	0: no serial clock delay 1: serial clock delay by 1 core clock cycle to tolerate anomalies in some I^2S master devices

Channel input mapping

Table 22. Channel input mapping

Bit	R/W	RST	Name	Description
6	R/W	0	C1IM	0: processing channel 1 receives left I^2S Input 1: processing channel 1 receives right I^2S Input
7	R/W	1	C2IM	0: processing channel 2 receives left I^2S Input 1: processing channel 2 receives right I^2S Input

Each channel received via I^2S can be mapped to any internal processing channel via the Channel Input Mapping registers. This allows for flexibility in processing. The default settings of these registers maps each I^2S input channel to its corresponding processing channel.

7.1.3 Configuration register C (addr 0x02)

D7	D6	D5	D4	D3	D2	D1	D0
OCRB	Reserved	CSZ3	CSZ2	CSZ1	CSZ0	OM1	OM0
1	0	0	1	0	1	1	1

FFX power output mode

The FFX power output mode selects how the FFX output timing is configured.

Different power devices use different output modes.

Table 23. FFX power output mode

Bit	R/W	RST	Name	Description
0	R/W	1	OM0	Selects configuration of FFX output: 00: drop compensation 01: discrete output stage: tapered compensation 10: full-power mode 11: variable drop compensation (CSZx bits)
1	R/W	1	OM1	

FFX compensating pulse size register

Table 24. FFX compensating pulse size bits

Bit	R/W	RST	Name	Description
2	R/W	1	CSZ0	When OM[1,0] = 11, this register determines the size of the FFX compensating pulse from 0 clock ticks to 15 clock periods.
3	R/W	1	CSZ1	
4	R/W	1	CSZ2	
5	R/W	0	CSZ3	

Table 25. Compensating pulse size

CSZ[3:0]	Compensating pulse size
0000	0 ns (0 tick) compensating pulse size
0001	20 ns (1 tick) clock period compensating pulse size
…	…
1111	300 ns (15 tick) clock period compensating pulse size

Overcurrent warning adjustment bypass

Table 26. Overcurrent warning bypass

Bit	R/W	RST	Name	Description
7	R/W	1	OCRB	0: overcurrent warning adjustment enabled 1: overcurrent warning adjustment disabled

The OCRB is used to indicate how STA339BWS behaves when an overcurrent warning condition occurs. If OCRB = 0 and the overcurrent condition happens, the power control block forces an adjustment to the modulation limit (default is -3 dB) in an attempt to eliminate the overcurrent warning condition. Once the overcurrent warning clipping adjustment is applied, it remains in this state until reset is applied or OCRB is set to 1. The level of adjustment can be changed via the TWOCL (thermal warning/overcurrent limit) setting at address 0x37 of the user defined coefficient RAM (*Section 7.7.7 on page 59*). The OCRB can be enabled when the output bridge is already on.

7.1.4 Configuration register D (addr 0x03)

D7	D6	D5	D4	D3	D2	D1	D0
SME	ZDE	DRC	BQL	PSL	DSPB	DEMP	HPB
0	1	0	0	0	0	0	0

High-pass filter bypass

Table 27. High-pass filter bypass

Bit	R/W	RST	Name	Description
0	R/W	0	HPB	1: bypass internal AC coupling digital high-pass filter

The STA339BWS features an internal digital high-pass filter for the purpose of AC coupling. The purpose of this filter is to prevent DC signals from passing through a FFX amplifier. DC signals can cause speaker damage. When HPB = 0, this filter is enabled.

De-emphasis

Table 28. De-emphasis

Bit	R/W	RST	Name	Description
1	R/W	0	DEMP	0: no de-emphasis 1: enable de-emphasis on all channels

DSP bypass

Table 29. DSP bypass

Bit	R/W	RST	Name	Description
2	R/W	0	DSPB	0: normal operation 1: bypass of biquad and bass/treble functions

Setting the DSPB bit bypasses the EQ function of the STA339BWS.

Postscale link

Table 30. Postscale link

Bit	R/W	RST	Name	Description
3	R/W	0	PSL	0: each channel uses individual postscale value 1: each channel uses channel 1 postscale value

Postscale functionality can be used for power-supply error correction. For multi-channel applications running off the same power-supply, the postscale values can be linked to the value of channel 1 for ease of use and update the values faster.

Biquad coefficient link

Table 31. Biquad coefficient link

Bit	R/W	RST	Name	Description
4	R/W	0	BQL	0: each channel uses coefficient values 1: each channel uses channel 1 coefficient values

For ease of use, all channels can use the biquad coefficients loaded into the Channel-1 coefficient RAM space by setting the BQL bit to 1. Therefore, any EQ updates only have to be performed once.

Dynamic range compression/anticlipping bit

Table 32. Dynamic range compression/anticlipping bit

Bit	R/W	RST	Name	Description
5	R/W	0	DRC	0: limiters act in anticlipping mode 1: limiters act in dynamic range compression mode

Both limiters can be used in one of two ways, anticlipping or dynamic range compression. When used in anticlipping mode the limiter threshold values are constant and dependent on the limiter settings. In dynamic range compression mode the limiter threshold values vary with the volume settings allowing a nighttime listening mode that provides a reduction in the dynamic range regardless of the volume level.

Zero-detect mute enable

Table 33. Zero-detect mute enable

Bit	R/W	RST	Name	Description
6	R/W	1	ZDE	0: automatic zero-detect mute disabled 1: automatic zero-detect mute enabled

Setting the ZDE bit enables the zero-detect automatic mute. The zero-detect circuit looks at the data for each processing channel at the output of the crossover (bass management) filter. If any channel receives 2048 consecutive zero value samples (regardless of fs) then that individual channel is muted if this function is enabled.

Submix mode enable

Table 34. Submix mode enable

Bit	R/W	RST	Name	Description
7	R/W	0	SME	0: submix into left/right disabled 1: submix into left/right enabled

7.1.5 Configuration register E (addr 0x04)

D7	D6	D5	D4	D3	D2	D1	D0
SVE	ZCE	DCCV	PWMS	AME	NSBW	MPC	MPCV
1	1	0	0	0	0	1	0

Max power correction variable

Table 35. Max power correction variable

Bit	R/W	RST	Name	Description
0	R/W	0	MPCV	0: use standard MPC coefficient 1: use MPCC bits for MPC coefficient

Max power correction

Table 36. Max power correction

Bit	R/W	RST	Name	Description
1	R/W	1	MPC	0: function disabled 1: enables power bridge correction for THD reduction near maximum power output.

Setting the MPC bit turns on special processing that corrects the STA339BWS power device at high power. This mode should lower the THD+N of a full FFX system at maximum power output and slightly below. If enabled, MPC is operational in all output modes except tapered (OM[1,0] = 01) and binary. When OCFG = 00, MPC has no effect on channels 3 and 4, the line-out channels.

Noise-shaper bandwidth selection

Table 37. Noise-shaper bandwidth selection

Bit	R/W	RST	Name	Description
2	R/W	0	NSBW	1: third-order NS 0: fourth-order NS

AM mode enable

Table 38. AM mode enable

Bit	R/W	RST	Name	Description
3	R/W	0	AME	0: normal FFX operation. 1: AM reduction mode FFX operation

STA339BWS features a FFX processing mode that minimizes the amount of noise generated in frequency range of AM radio. This mode is intended for use when FFX is operating in a device with an AM tuner active. The SNR of the FFX processing is reduced to approximately 83 dB in this mode, which is still greater than the SNR of AM radio.

PWM speed mode

Table 39. PWM speed mode

Bit	R/W	RST	Name	Description
4	R/W	0	PWMS	0: normal speed (384 kHz) all channels 1: odd speed (341.3 kHz) all channels

Distortion compensation variable enable

Table 40. Distortion compensation variable enable

Bit	R/W	RST	Name	Description
5	R/W	0	DCCV	0: use preset DC coefficient 1: use DCC coefficient

Zero-crossing volume enable

Table 41. Zero-crossing volume enable

Bit	R/W	RST	Name	Description
6	R/W	1	ZCE	1: volume adjustments only occur at digital zero-crossings 0: volume adjustments occur immediately

The ZCE bit enables zero-crossing volume adjustments. When volume is adjusted on digital zero-crossings no clicks are audible.

Soft volume update enable

Table 42. Soft volume update enable

Bit	R/W	RST	Name	Description
7	R/W	1	SVE	1: volume adjustments ramp according to SVUP/SVDW settings 0: volume adjustments occur immediately

7.1.6 Configuration register F (addr 0x05)

D7	D6	D5	D4	D3	D2	D1	D0
EAPD	PWDN	ECLE	LDTE	BCLE	IDE	OCFG1	OCFG0
0	1	0	1	1	1	0	0

Output configuration

Table 43. Output configuration

Bit	R/W	RST	Name	Description
0	R/W	0	OCFG0	Selects the output configuration
1	R/W	0	OCFG1	

Table 44. Output configuration engine selection

OCFG[1:0]	Output configuration	Config pin
00	2 channel (full-bridge) power, 2 channel data-out: 1A/1B → 1A/1B 2A/2B → 2A/2B LineOut1 → 3A/3B LineOut2 → 4A/4B Line Out Configuration determined by LOC register	0
01	2 (half-bridge), 1(full-bridge) on-board power: 1A → 1A Binary 0 ° 2A → 1B Binary 90° 3A/3B → 2A/2B Binary 45° 1A/B → 3A/B Binary 0° 2A/B → 4A/B Binary 90°	0
10	2 channel (full-bridge) power, 1 channel FFX: 1A/1B → 1A/1B 2A/2B → 2A/2B 3A/3B → 3A/3B EAPDEXT and TWARNEXT Active	0
11	1 channel mono-parallel: 3A → 1A/1B w/ C3BO 45° 3B → 2A/2B w/ C3BO 45° 1A/1B → 3A/3B 2A/2B → 4A/4B	1

Note: To the left of the arrow is the processing channel. When using channel output mapping, any of the three processing channel outputs can be used for any of the three inputs.

Figure 11. OCFG = 00 (default value)

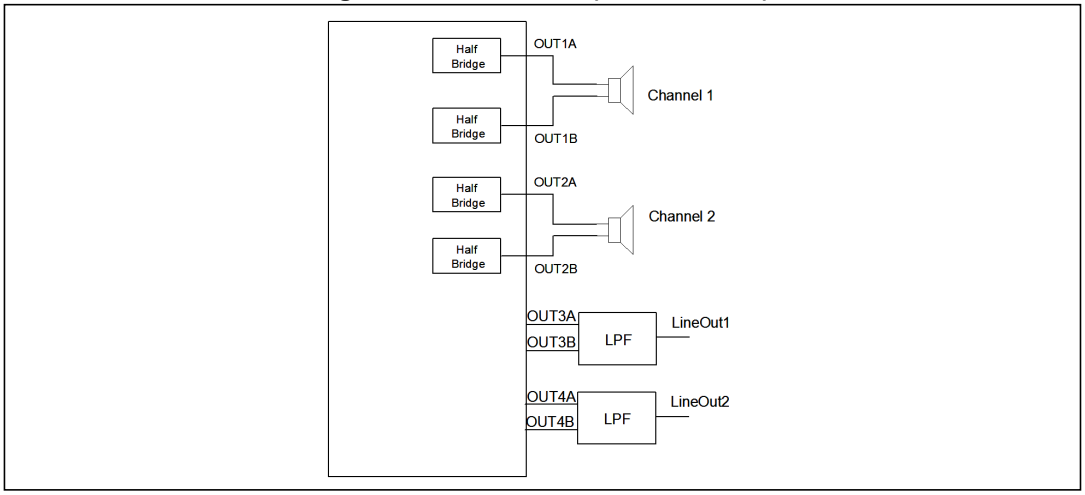

Figure 12. OCFG = 01

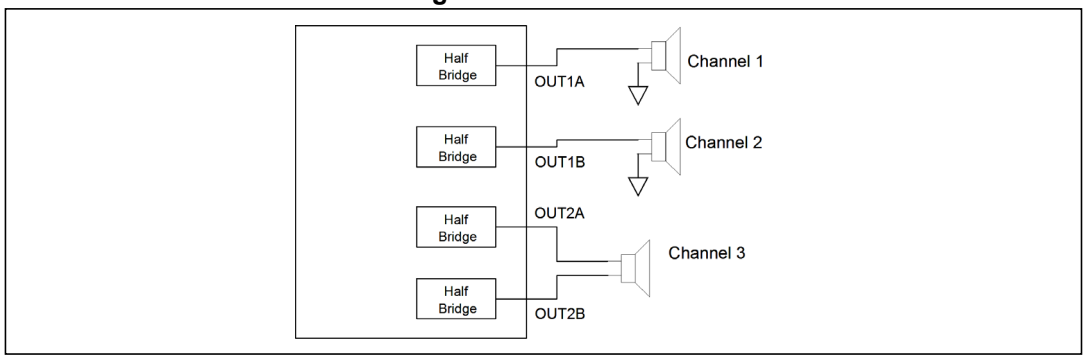

Figure 13. OCFG = 10

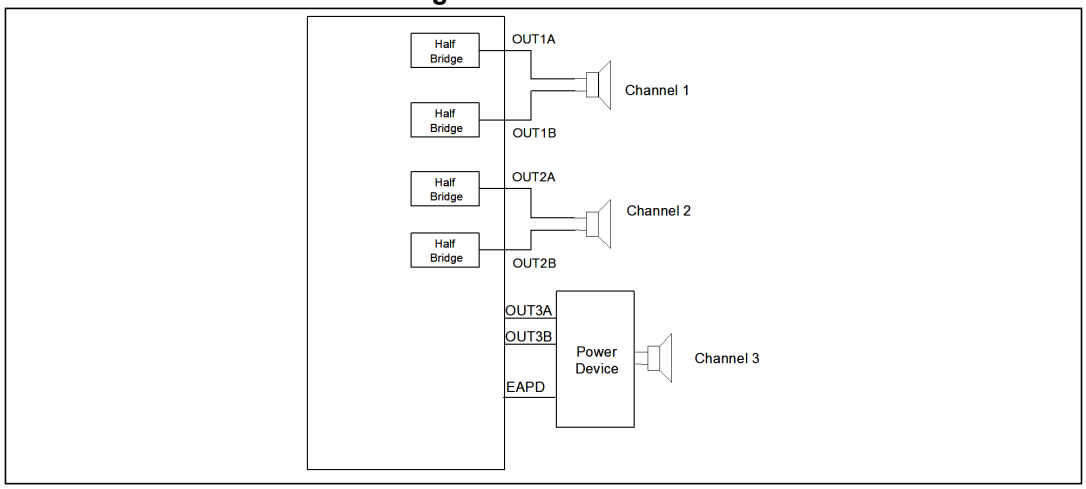

Figure 14. OCFG = 11

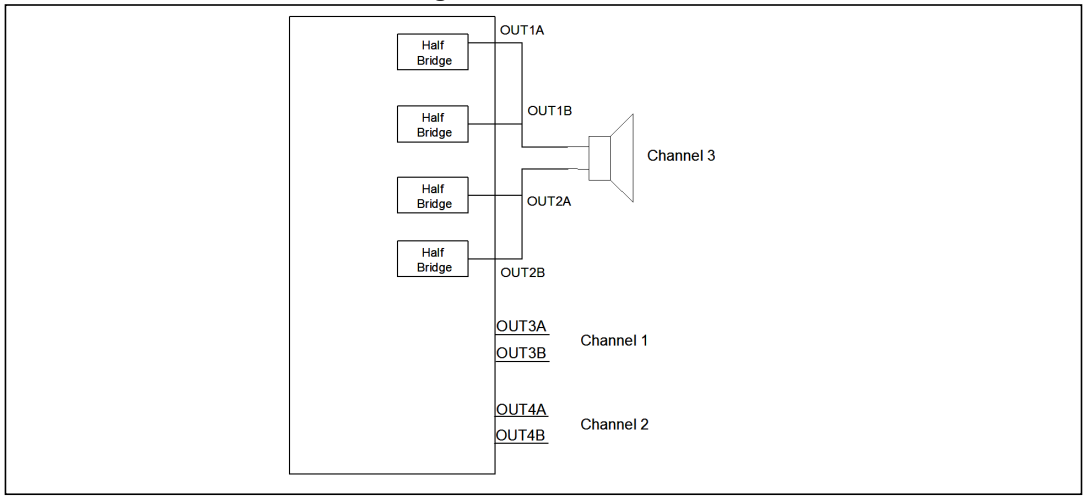

The STA339BWS can be configured to support different output configurations. For each PWM output channel a PWM slot is defined. A PWM slot is always 1 / (8 * fs) seconds length. The PWM slot define the maximum extension for PWM rise and fall edge, that is, rising edge as far as the falling edge cannot range outside PWM slot boundaries.

Figure 15. Output mapping scheme

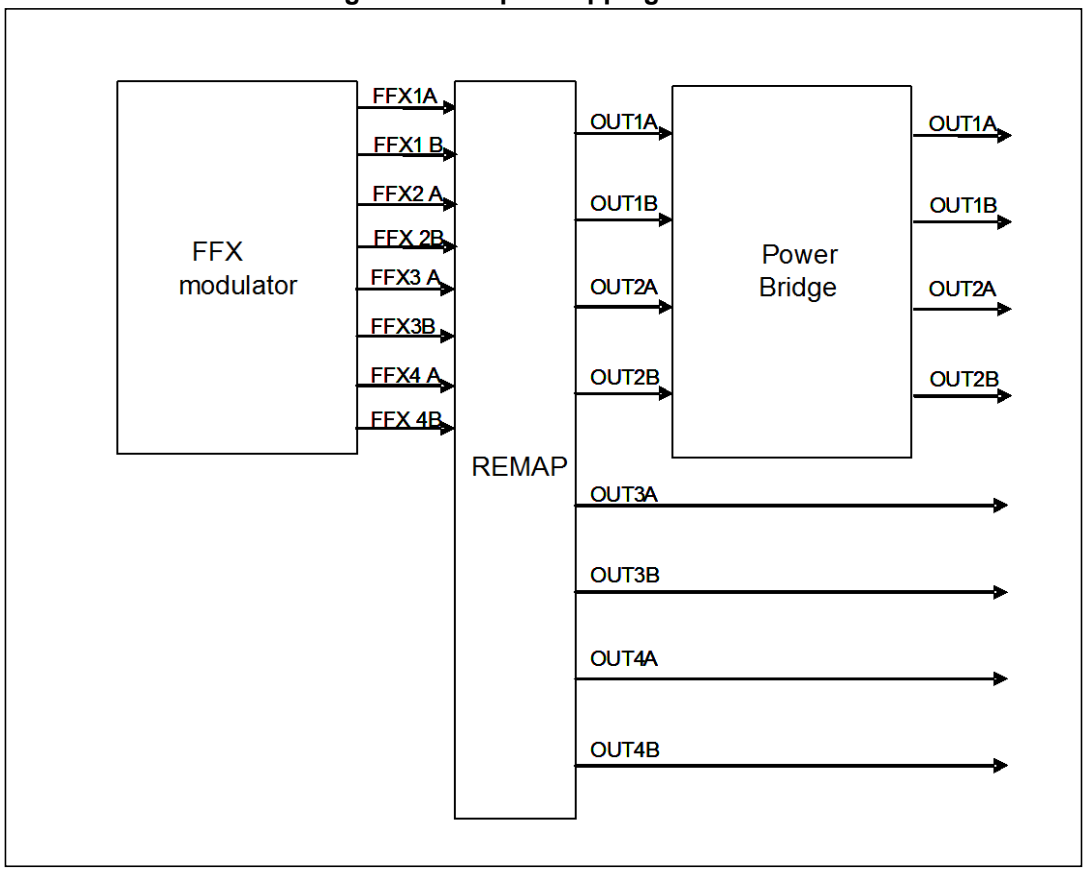

For each configuration the PWM signals from the digital driver are mapped in different ways to the power stage:

2.0 channels, two full-bridges (OCFG = 00)

Mapping:

- FFX1A -> OUT1A
- FFX1B -> OUT1B
- FFX2A -> OUT2A
- FFX2B -> OUT2B
- FFX3A -> OUT3A
- FFX3B -> OUT3B
- FFX4A -> OUT4A
- FFX4B -> OUT4B

Default modulation:

- FFX1A/1B configured as ternary
- FFX2A/2B configured as ternary
- FFX3A/3B configured as lineout ternary
- FFX4A/4B configured as lineout ternary

On channel 3 line out (LOC bits = 00) the same data as channel 1 processing is sent. On channel 4 line out (LOC bits = 00) the same data as channel 2 processing is sent. In this configuration, volume control or EQ have no effect on channels 3 and 4.

In this configuration the PWM slot phase is the following as shown in *Figure 16*.

Figure 16. 2.0 channels (OCFG = 00) PWM slots

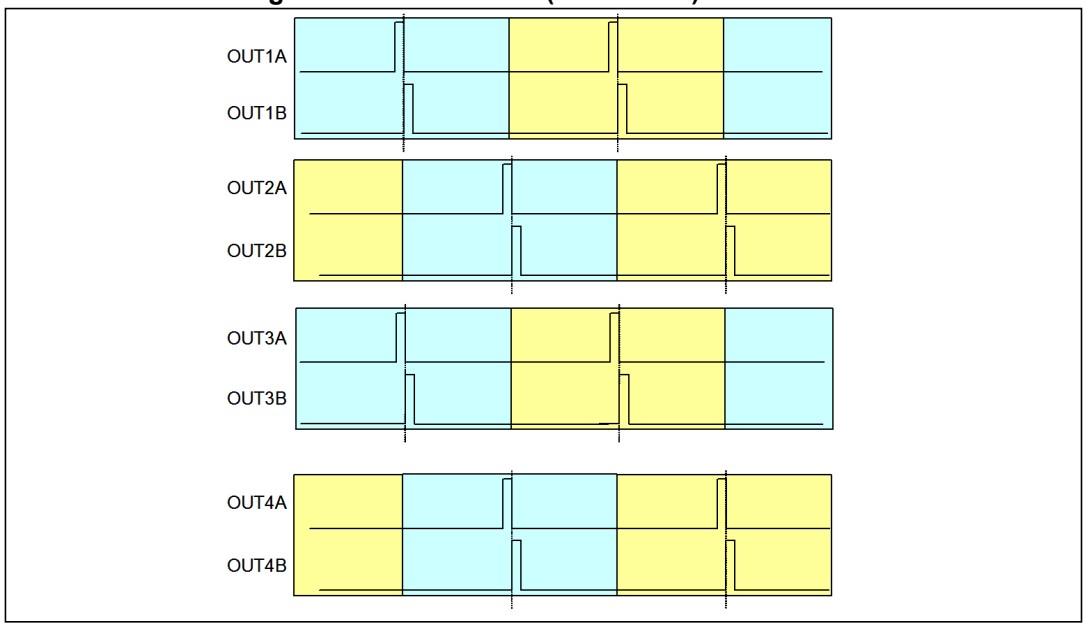

2.1 channels, two half-bridges + one full-bridge (OCFG = 01)

Mapping:

- FFX1A -> OUT1A
- FFX2A -> OUT1B
- FFX3A -> OUT2A
- FFX3B -> OUT2B
- FFX1A -> OUT3A
- FFX1B -> OUT3B
- FFX2A -> OUT4A
- FFX2B -> OUT4B

Modulation:

- FFX1A/1B configured as binary
- FFX2A/2B configured as binary
- FFX3A/3B configured as binary
- FFX4A/4B configured as binary

In this configuration, channel 3 has full control (volume, EQ, etc…). On OUT3/OUT4 channels the channel 1 and channel 2 PWM are replicated.

In this configuration the PWM slot phase is the following as shown in *Figure 17*.

Figure 17. 2.1 channels (OCFG = 01) PWM slots

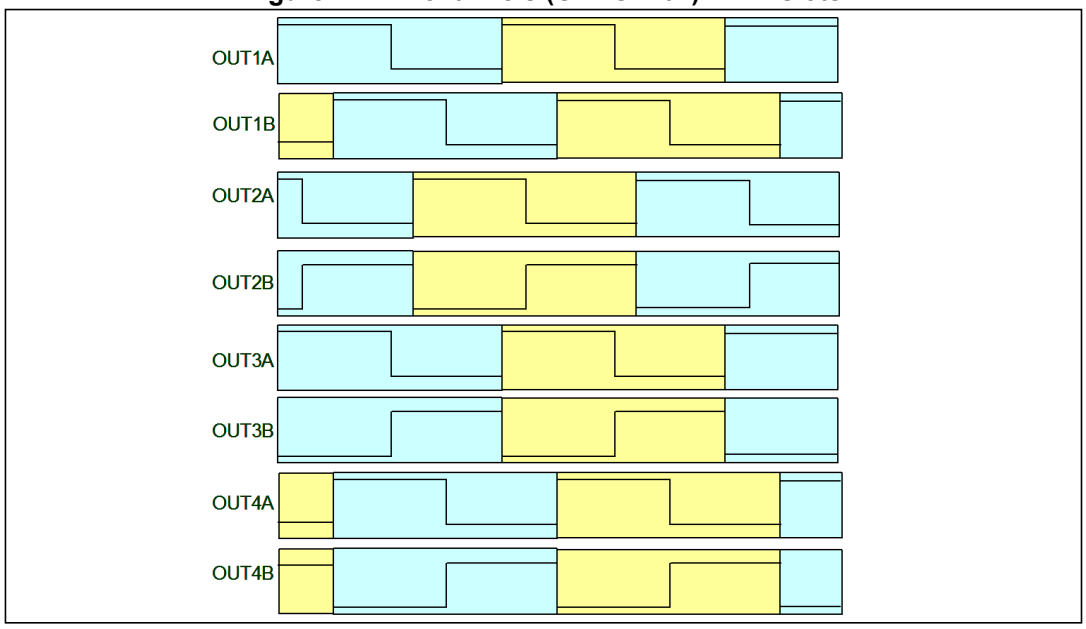

2.1 channels, two full-bridges + one external full-bridge (OCFG = 10)

Mapping:

- FFX1A -> OUT1A
- FFX1B -> OUT1B
- FFX2A -> OUT2A
- FFX2B -> OUT2B
- FFX3A -> OUT3A
- FFX3B -> OUT3B
- EAPD -> OUT4A
- TWARN -> OUT4B

Default modulation:

- FFX1A/1B configured as ternary
- FFX2A/2B configured as ternary
- FFX3A/3B configured as ternary
- FFX4A/4B is not used

In this configuration, channel 3 has full control (volume, EQ, etc…). On OUT4 channel the external bridge control signals are multiplexed.

In this configuration the PWM slot phase is the following as shown in *Figure 18*.

Figure 18. 2.1 channels (OCFG = 10) PWM slots

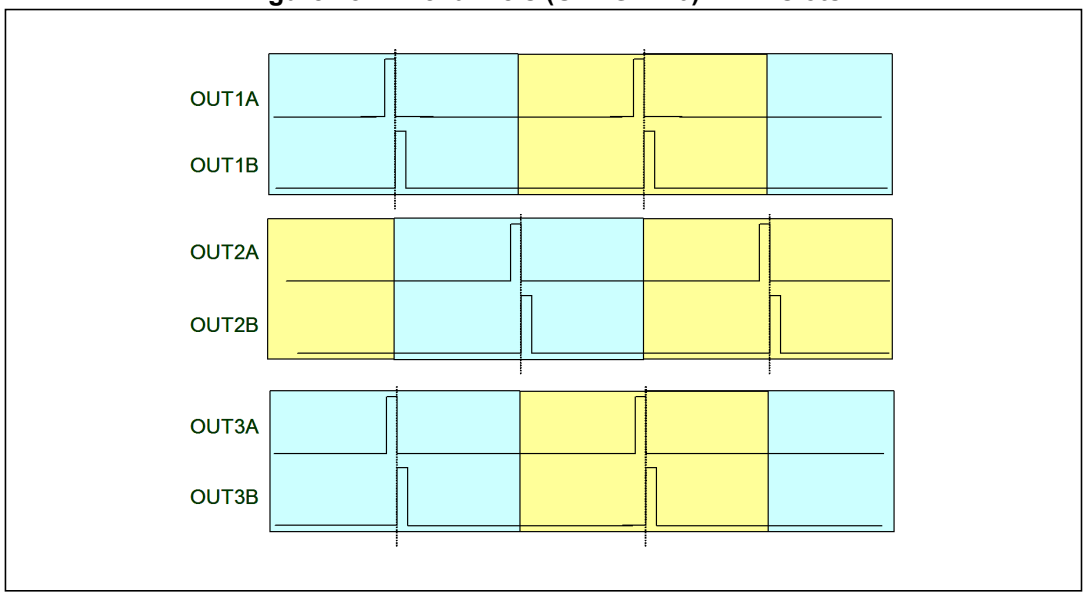

1 channel mono-parallel (OCFG = 11)

Mapping:

FFX1A -> OUT3A

FFX1B -> OUT3B

FFX2A -> OUT4A

FFX2B -> OUT4B

FFX3A -> OUT1A/OUT1B

FFX3B -> OUT2A/OUT2B

In this configuration, the CONFIG pin must be connected to the VDD pin.

Invalid input detect mute enable

Table 45. Invalid input detect mute enable

Bit	R/W	RST	Name	Description
2	R/W	1	IDE	0: disables the automatic invalid input detect mute 1: enables the automatic invalid input detect mute

Setting the IDE bit enables this function, which looks at the input I^2S data and automatically mutes if the signals are perceived as invalid.

Binary output mode clock loss detection

Table 46. Binary output mode clock loss detection

Bit	R/W	RST	Name	Description
3	R/W	1	BCLE	0: binary output mode clock loss detection disabled 1: binary output mode clock loss detection enable

Detects loss of input MCLK in binary mode and will output 50% duty cycle.

LRCK double trigger protection

Table 47. LRCK double trigger protection

Bit	R/W	RST	Name	Description
4	R/W	1	LDTE	0: LRCLK double trigger protection disabled 1: LRCLK double trigger protection enabled

LDTE, when enabled, prevents double trigger of LRCLK on instable I2S input.

Auto EAPD on clock loss

Table 48. Auto EAPD on clock loss

Bit	R/W	RST	Name	Description
5	R/W	0	ECLE	0: auto EAPD on clock loss not enabled 1: auto EAPD on clock loss

When active, issues a power device power down signal (EAPD) on clock loss detection.

IC power down

Table 49. IC power down

Bit	R/W	RST	Name	Description
6	R/W	1	PWDN	0: IC power down low-power condition 1: IC normal operation

The PWDN register is used to place the IC in a low-power state. When PWDN is written as 0, the output begins a soft-mute. After the mute condition is reached, EAPD is asserted to power down the power-stage, then the master clock to all internal hardware expect the I^2C block is gated. This places the IC in a very low power consumption state.

External amplifier power down

Table 50. External amplifier power down

Bit	R/W	RST	Name	Description
7	R/W	0	EAPD	0: external power stage power down active 1: normal operation

The EAPD register directly disables/enables the internal power circuitry.

When EAPD = 0, the internal power section is placed in a low-power state (disabled). This register also controls the FFX4B/EAPD output pin when OCFG = 10.

7.2 Volume control registers (addr 0x06 - 0x0A)

The volume structure of the STA339BWS consists of individual volume registers for each channel and a master volume register that provides an offset to each channels volume setting. The individual channel volumes are adjustable in 0.5 dB steps from +48 dB to -80 dB.

As an example if C3VOL = 0x00 or +48 dB and MVOL = 0x18 or -12 dB, then the total gain for channel 3 = +36 dB.

The channel mutes provide a “soft mute” with the volume ramping down to mute in 4096 samples from the maximum volume setting at the internal processing rate (approximately 96 kHz).

All changes in volume take place at zero-crossings when ZCE = 1 (*Configuration register E (addr 0x04)*) on a per channel basis as this creates the smoothest possible volume transitions. When ZCE = 0, volume updates occur immediately.

7.2.1 Mute/line output configuration register (addr 0x06)

D7	D6	D5	D4	D3	D2	D1	D0
LOC1	LOC0	Reserved	Reserved	C3M	C2M	C1M	Reserved
0	0	0	1	0	0	0	0

Table 51. Line output configuration

LOC[1:0]	Line output configuration
00	Line output fixed - no volume, no EQ
01	Line output variable - channel 3 volume effects line output, no EQ
10	Line output variable with EQ - channel 3 volume effects line output

Line output is only active when OCFG = 00. In this case LOC determines the line output configuration. The source of the line output is always the channel 1 and 2 inputs.

7.2.2 Master volume register (addr 0x07)

D7	D6	D5	D4	D3	D2	D1	D0
MVOL7	MVOL6	MVOL5	MVOL4	MVOL3	MVOL2	MVOL1	MVOL0
1	1	1	1	1	1	1	1

Table 52. Master volume offset as a function of MVOL[7:0]

MVOL[7:0]	Volume offset from channel value
00000000 (0x00)	0 dB
00000001 (0x01)	-0.5 dB
00000010 (0x02)	-1 dB
…	…
01001100 (0x4C)	-38 dB
…	…
11111110 (0xFE)	-127.5 dB
11111111 (0xFF)	Default mute, not to be used during operation

7.2.3 Channel 1 volume (addr 0x08)

D7	D6	D5	D4	D3	D2	D1	D0
C1VOL7	C1VOL6	C1VOL5	C1VOL4	C1VOL3	C1VOL2	C1VOL1	C1VOL0
0	1	1	0	0	0	0	0

7.2.4 Channel 2 volume (addr 0x09)

D7	D6	D5	D4	D3	D2	D1	D0
C2VOL7	C2VOL6	C2VOL5	C2VOL4	C2VOL3	C2VOL2	C2VOL1	C2VOL0
0	1	1	0	0	0	0	0

7.2.5 Channel 3 / line output volume (addr 0x0A)

D7	D6	D5	D4	D3	D2	D1	D0
C3VOL7	C3VOL6	C3VOL5	C3VOL4	C3VOL3	C3VOL2	C3VOL1	C3VOL0
0	1	1	0	0	0	0	0

Table 53. Channel volume as a function of CxVOL[7:0]

CxVOL[7:0]	Volume
00000000 (0x00)	+48 dB
00000001 (0x01)	+47.5 dB
00000010 (0x02)	+47 dB
…	…
01011111 (0x5F)	+0.5 dB
01100000 (0x60)	0 dB
01100001 (0x61)	-0.5 dB
…	…
11010111 (0xD7)	-59.5 dB
11011000 (0xD8)	-60 dB
11011001 (0xD9)	-61 dB
11011010 (0xDA)	-62 dB
…	…
11101100 (0xEC)	-80 dB
11101101 (0xED)	Hard channel mute
…	…
11111111 (0xFF)	Hard channel mute

7.3 Audio preset registers (addr 0x0B and 0x0C)

7.3.1 Audio preset register 1 (addr 0x0B)

D7	D6	D5	D4	D3	D2	D1	D0
Reserved	Reserved	AMGC[1]	AMGC[0]	Reserved	Reserved	Reserved	Reserved
1	0	0	0	0	0	0	0

Using AMGC[3:0] bits, attack and release thresholds and rates are automatically configured to properly fit application specific configurations. AMGC[3:2] is defined in register *EQ coefficients and DRC configuration register (addr 0x31) on page 66*.

The AMGC[1:0] bits behave in two different ways depending on the value of AMGC[3:2]. When this value is 00 then bits AMGC[1:0] are defined below in *Table 54*.

Table 54. Audio preset gain compression/limiters selection for AMGC[3:2] = 00

AMGC[1:0]	Mode
00	User programmable GC
01	AC no clipping 2.1
10	AC limited clipping (10%) 2.1
11	DRC night-time listening mode 2.1

7.3.2 Audio preset register 2 (addr 0x0C)

D7	D6	D5	D4	D3	D2	D1	D0
XO3	XO2	XO1	XO0	AMAM2	AMAM1	AMAM0	AMAME
0	0	0	0	0	0	0	0

AM interference frequency switching

Table 55. AM interference frequency switching bits

Bit	R/W	RST	Name	Description
0	R/W	0	AMAME	Audio preset AM enable 0: switching frequency determined by PWMS setting 1: switching frequency determined by AMAM settings

Table 56. Audio preset AM switching frequency selection

AMAM[2:0]	48 kHz/96 kHz input fs	44.1 kHz/88.2 kHz input fs
000	0.535 MHz - 0.720 MHz	0.535 MHz - 0.670 MHz
001	0.721 MHz - 0.900 MHz	0.671 MHz - 0.800 MHz
010	0.901 MHz - 1.100 MHz	0.801 MHz - 1.000 MHz
011	1.101 MHz - 1.300 MHz	1.001 MHz - 1.180 MHz
100	1.301 MHz - 1.480 MHz	1.181 MHz - 1.340 MHz

Table 56. Audio preset AM switching frequency selection (continued)

AMAM[2:0]	48 kHz/96 kHz input fs	44.1 kHz/88.2 kHz input fs
101	1.481 MHz - 1.600 MHz	1.341 MHz - 1.500 MHz
110	1.601 MHz - 1.700 MHz	1.501 MHz - 1.700 MHz

Bass management crossover

Table 57. Bass management crossover

Bit	R/W	RST	Name	Description
4	R/W	0	XO0	Selects the bass-management crossover frequency. A 1st-order hign-pass filter (channels 1 and 2) or a 2nd-order low-pass filter (channel 3) at the selected frequency is performed.
5	R/W	0	XO1	
6	R/W	0	XO2	
7	R/W	0	XO3	

Table 58. Bass management crossover frequency

XO[3:0]	Crossover frequency
0000	User-defined (*Section 7.7.8 on page 59*)
0001	80 Hz
0010	100 Hz
0011	120 Hz
0100	140 Hz
0101	160 Hz
0110	180 Hz
0111	200 Hz
1000	220 Hz
1001	240 Hz
1010	260 Hz
1011	280 Hz
1100	300 Hz
1101	320 Hz
1110	340 Hz
1111	360 Hz

7.4 Channel configuration registers (addr 0x0E - 0x10)

D7	D6	D5	D4	D3	D2	D1	D0
C1OM1	C1OM0	C1LS1	C1LS0	C1BO	C1VPB	C1EQBP	C1TCB
0	0	0	0	0	0	0	0

D7	D6	D5	D4	D3	D2	D1	D0
C2OM1	C2OM0	C2LS1	C2LS0	C2BO	C2VPB	C2EQBP	C2TCB
0	1	0	0	0	0	0	0

D7	D6	D5	D4	D3	D2	D1	D0
C3OM1	C3OM0	C3LS1	C3LS0	C3BO	C3VPB	Reserved	Reserved
1	0	0	0	0	0	0	0

Tone control bypass

Tone control (bass/treble) can be bypassed on a per channel basis for channels 1 and 2.

Table 59. Tone control bypass

CxTCB	Mode
0	Perform tone control on channel x - normal operation
1	Bypass tone control on channel x

EQ bypass

EQ control can be bypassed on a per channel basis for channels 1 and 2. If EQ control is bypassed on a given channel the prescale and all filters (high-pass, biquads, de-emphasis, bass, treble in any combination) are bypassed for that channel.

Table 60. EQ bypass

CxEQBP	Mode
0	Perform EQ on channel x - normal operation
1	Bypass EQ on channel x

Volume bypass

Each channel contains an individual channel volume bypass. If a particular channel has volume bypassed via the CxVBP = 1 register then only the channel volume setting for that particular channel affects the volume setting, the master volume setting has no effect on that channel.

Table 61. Volume bypass register

CxVBP	Mode
0	Normal volume operations
1	Volume is by-passed

Binary output enable registers

Each individual channel output can be set to output a binary PWM stream. In this mode output A of a channel is considered the positive output and output B is negative inverse.

Table 62. Binary output enable registers

CxBO	Mode
0	FFX output operation
1	Binary output

Limiter select

Limiter selection can be made on a per-channel basis according to the channel limiter select bits. CxLS bits are not considered when dual band DRC (*Section 7.13.1 on page 67*) or EQ DRC (*Section 7.13.2*) is used.

Table 63. Channel limiter mapping as a function of CxLS bits

CxLS[1:0]	Channel limiter mapping
00	Channel has limiting disabled
01	Channel is mapped to limiter #1
10	Channel is mapped to limiter #2

Output mapping

Output mapping can be performed on a per channel basis according to the CxOM channel output mapping bits. Each input into the output configuration engine can receive data from any of the three processing channel outputs.

Table 64. Channel output mapping as a function of CxOM bits

CxOM[1:0]	Channel x output source from
00	Channel1
01	Channel 2
10	Channel 3

7.5 Tone control register (addr 0x11)

D7	D6	D5	D4	D3	D2	D1	D0
TTC3	TTC2	TTC1	TTC0	BTC3	BTC2	BTC1	BTC0
0	1	1	1	0	1	1	1

Tone control

Table 65. Tone control boost/cut as a function of BTC and TTC bits

BTC[3:0]/TTC[3:0]	Boost/Cut
0000	-12 dB
0001	-12 dB
0010	-10 dB
…	…
0101	-4 dB
0110	-2 dB
0111	0 dB
1000	+2 dB
1001	+4 dB
…	…
1100	+10 dB
1101	+12 dB
1110	+12 dB
1111	+12 dB

7.6 Dynamic control registers (addr 0x12 - 0x15)

7.6.1 Limiter 1 attack/release rate (addr 0x12)

D7	D6	D5	D4	D3	D2	D1	D0
L1A3	L1A2	L1A1	L1A0	L1R3	L1R2	L1R1	L1R0
0	1	1	0	1	0	1	0

7.6.2 Limiter 1 attack/release threshold (addr 0x13)

D7	D6	D5	D4	D3	D2	D1	D0
L1AT3	L1AT2	L1AT1	L1AT0	L1RT3	L1RT2	L1RT1	L1RT0
0	1	1	0	1	0	0	1

7.6.3 Limiter 2 attack/release rate (addr 0x14)

D7	D6	D5	D4	D3	D2	D1	D0
L2A3	L2A2	L2A1	L2A0	L2R3	L2R2	L2R1	L2R0
0	1	1	0	1	0	1	0

7.6.4 Limiter 2 attack/release threshold (addr 0x15)

D7	D6	D5	D4	D3	D2	D1	D0
L2AT3	L2AT2	L2AT1	L2AT0	L2RT3	L2RT2	L2RT1	L2RT0
0	1	1	0	1	0	0	1

7.6.5 Description

The STA339BWS includes two independent limiter blocks. The purpose of the limiters is to automatically reduce the dynamic range of a recording to prevent the outputs from clipping in anticlipping mode or to actively reduce the dynamic range for a better listening environment such as a night-time listening mode which is often needed for DVDs. The two modes are selected via the DRC bit in *Configuration register E (addr 0x04) on page 33*. Each channel can be mapped to either limiter or not mapped, meaning that channel will clip when 0 dBFS is exceeded. Each limiter looks at the present value of each channel that is mapped to it, selects the maximum absolute value of all these channels, performs the limiting algorithm on that value, and then if needed adjusts the gain of the mapped channels in unison.

Figure 19. Basic limiter and volume flow diagram

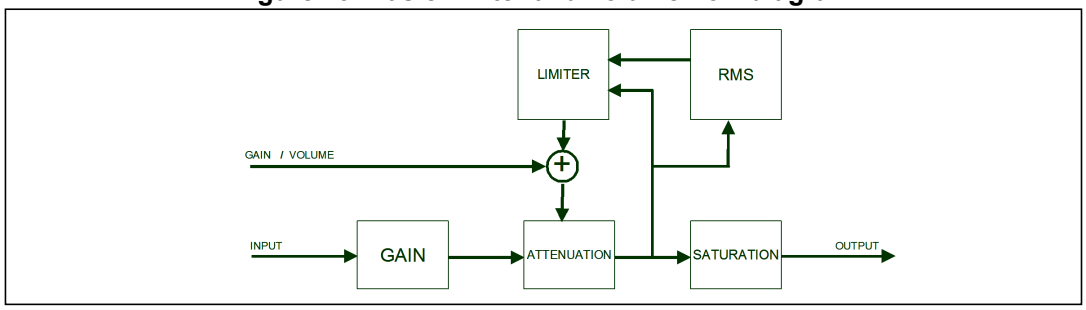

The limiter attack thresholds are determined by the LxAT registers if EATHx[7] bits are set to 0 else the thresholds are determined by EATHx[6:0]. It is recommended in anticlipping mode to set this to 0 dBFS, which corresponds to the maximum unclipped output power of a FFX amplifier. Since gain can be added digitally within the STA339BWS it is possible to exceed 0 dBFS or any other LxAT setting, when this occurs, the limiter, when active, automatically starts reducing the gain. The rate at which the gain is reduced when the attack threshold is exceeded is dependent upon the attack rate register setting for that limiter. Gain reduction occurs on a peak-detect algorithm. Setting EATHx[7] bits to 1 selects the anticlipping mode.

The limiter release thresholds are determined by the LxRT registers if ERTHx[7] bits are set to 0 else the thresholds are determined by ERTHx[6:0]. Settings to 1 ERTHx[7] bits the anticlipping mode is selected automatically. The release of limiter, when the gain is again increased, is dependent on a RMS-detect algorithm. The output of the volume/limiter block is passed through a RMS filter. The output of this filter is compared to the release threshold, determined by the Release Threshold register. When the RMS filter output falls below the

release threshold, the gain is again increased at a rate dependent upon the Release Rate register. The gain can never be increased past its set value and, therefore, the release only occurs if the limiter has already reduced the gain. The release threshold value can be used to set what is effectively a minimum dynamic range, this is helpful as over limiting can reduce the dynamic range to virtually zero and cause program material to sound “lifeless”.

In AC mode, the attack and release thresholds are set relative to full-scale. In DRC mode, the attack threshold is set relative to the maximum volume setting of the channels mapped to that limiter and the release threshold is set relative to the maximum volume setting plus the attack threshold.

Table 66. Limiter attack rate vs LxA bits

LxA[3:0]	Attack Rate dB/ms	
0000	3.1584	Fast ↓ Slow
0001	2.7072	
0010	2.2560	
0011	1.8048	
0100	1.3536	
0101	0.9024	
0110	0.4512	
0111	0.2256	
1000	0.1504	
1001	0.1123	
1010	0.0902	
1011	0.0752	
1100	0.0645	
1101	0.0564	
1110	0.0501	
1111	0.0451	

Table 67. Limiter release rate vs LxR bits

LxR[3:0]	Release Rate dB/ms	
0000	0.5116	Fast
0001	0.1370	
0010	0.0744	
0011	0.0499	
0100	0.0360	
0101	0.0299	
0110	0.0264	
0111	0.0208	
1000	0.0198	
1001	0.0172	
1010	0.0147	
1011	0.0137	
1100	0.0134	
1101	0.0117	
1110	0.0110	Slow
1111	0.0104	

Anticlipping mode

Table 68. Limiter attack threshold vs LxAT bits (AC mode)

LxAT[3:0]	AC (dB relative to fs)
0000	-12
0001	-10
0010	-8
0011	-6
0100	-4
0101	-2
0110	0
0111	+2
1000	+3
1001	+4
1010	+5
1011	+6
1100	+7
1101	+8

Table 68. Limiter attack threshold vs LxAT bits (AC mode) (continued)

LxAT[3:0]	AC (dB relative to fs)
1110	+9
1111	+10

Table 69. Limiter release threshold vs LxRT bits (AC mode)

LxRT[3:0]	AC (dB relative to fs)
0000	-∞
0001	-29
0010	-20
0011	-16
0100	-14
0101	-12
0110	-10
0111	-8
1000	-7
1001	-6
1010	-5
1011	-4
1100	-3
1101	-2
1110	-1
1111	-0

Dynamic range compression mode

Table 70. Limiter attack threshold vs LxAT bits (DRC mode)

LxAT[3:0]	DRC (dB relative to Volume)
0000	-31
0001	-29
0010	-27
0011	-25
0100	-23
0101	-21
0110	-19
0111	-17
1000	-16

Table 70. Limiter attack threshold vs LxAT bits (DRC mode) (continued)

LxAT[3:0]	DRC (dB relative to Volume)
1001	-15
1010	-14
1011	-13
1100	-12
1101	-10
1110	-7
1111	-4

Table 71. Limiter release threshold vs LxRT bits (DRC mode)

LxRT[3:0]	DRC (db relative to Volume + LxAT)
0000	-∞
0001	-38
0010	-36
0011	-33
0100	-31
0101	-30
0110	-28
0111	-26
1000	-24
1001	-22
1010	-20
1011	-18
1100	-15
1101	-12
1110	-9
1111	-6

7.6.6 Limiter 1 extended attack threshold (addr 0x32)

D7	D6	D5	D4	D3	D2	D1	D0
EATHEN1	EATH1[6]	EATH1[5]	EATH1[4]	EATH1[3]	EATH1[2]	EATH1[1]	EATH1[0]
0	0	1	1	0	0	0	0

The extended attack threshold value is determined as follows:

attack threshold = -12 + EATH1 / 4

7.6.7 Limiter 1 extended release threshold (addr 0x33)

D7	D6	D5	D4	D3	D2	D1	D0
ERTHEN1	ERTH1[6]	ERTH1[5]	ERTH1[4]	ERTH1[3]	ERTH1[2]	ERTH1[1]	ERTH1[0]
0	0	1	1	0	0	0	0

The extended release threshold value is determined as follows:

release threshold = -12 + ERTH1 / 4

7.6.8 Limiter 2 extended attack threshold (addr 0x34)

D7	D6	D5	D4	D3	D2	D1	D0
EATHEN2	EATH2[6]	EATH2[5]	EATH2[4]	EATH2[3]	EATH2[2]	EATH2[1]	EATH2[0]
0	0	1	1	0	0	0	0

The extended attack threshold value is determined as follows:

attack threshold = -12 + EATH2 / 4

7.6.9 Limiter 2 extended release threshold (addr 0x35)

D7	D6	D5	D4	D3	D2	D1	D0
ERTHEN2	ERTH2[6]	ERTH2[5]	ERTH2[4]	ERTH2[3]	ERTH2[2]	ERTH2[1]	ERTH2[0]
0	0	1	1	0	0	0	0

The extended release threshold value is determined as follows:

release threshold = -12 + ERTH2 / 4

Note: Attack/release threshold step is 0.125 dB in the range -12 dB and 0 dB.

7.7 User-defined coefficient control registers (addr 0x16 - 0x26)

7.7.1 Coefficient address register (addr 0x16)

D7	D6	D5	D4	D3	D2	D1	D0
Reserved	Reserved	CFA5	CFA4	CFA3	CFA2	CFA1	CFA0
0	0	0	0	0	0	0	0

7.7.2 Coefficient b1 data register bits (addr 0x17 - 0x19)

D7	D6	D5	D4	D3	D2	D1	D0
C1B23	C1B22	C1B21	C1B20	C1B19	C1B18	C1B17	C1B16
0	0	0	0	0	0	0	0

D7	D6	D5	D4	D3	D2	D1	D0
C1B15	C1B14	C1B13	C1B12	C1B11	C1B10	C1B9	C1B8
0	0	0	0	0	0	0	0

D7	D6	D5	D4	D3	D2	D1	D0
C1B7	C1B6	C1B5	C1B4	C1B3	C1B2	C1B1	C1B0
0	0	0	0	0	0	0	0

7.7.3 Coefficient b2 data register bits (addr 0x1A - 0x1C)

D7	D6	D5	D4	D3	D2	D1	D0
C2B23	C2B22	C2B21	C2B20	C2B19	C2B18	C2B17	C2B16
0	0	0	0	0	0	0	0

D7	D6	D5	D4	D3	D2	D1	D0
C2B15	C2B14	C2B13	C2B12	C2B11	C2B10	C2B9	C2B8
0	0	0	0	0	0	0	0

D7	D6	D5	D4	D3	D2	D1	D0
C2B7	C2B6	C2B5	C2B4	C2B3	C2B2	C2B1	C2B0
0	0	0	0	0	0	0	0

7.7.4 Coefficient a1 data register bits (addr 0x1D - 0x1F)

D7	D6	D5	D4	D3	D2	D1	D0
C3B23	C3B22	C3B21	C3B20	C3B19	C3B18	C3B17	C3B16
0	0	0	0	0	0	0	0

D7	D6	D5	D4	D3	D2	D1	D0
C3B15	C3B14	C3B13	C3B12	C3B11	C3B10	C3B9	C3B8
0	0	0	0	0	0	0	0

D7	D6	D5	D4	D3	D2	D1	D0
C3B7	C3B6	C3B5	C3B4	C3B3	C3B2	C3B1	C3B0
0	0	0	0	0	0	0	0

7.7.5 Coefficient a2 data register bits (addr 0x20 - 0x22)

D7	D6	D5	D4	D3	D2	D1	D0
C4B23	C4B22	C4B21	C4B20	C4B19	C4B18	C4B17	C4B16
0	0	0	0	0	0	0	0

D7	D6	D5	D4	D3	D2	D1	D0
C4B15	C4B14	C4B13	C4B12	C4B11	C4B10	C4B9	C4B8
0	0	0	0	0	0	0	0

D7	D6	D5	D4	D3	D2	D1	D0
C4B7	C4B6	C4B5	C4B4	C4B3	C4B2	C4B1	C4B0
0	0	0	0	0	0	0	0

7.7.6 Coefficient b0 data register bits (addr 0x23 - 0x25)

D7	D6	D5	D4	D3	D2	D1	D0
C5B23	C5B22	C5B21	C5B20	C5B19	C5B18	C5B17	C5B16
0	0	0	0	0	0	0	0

D7	D6	D5	D4	D3	D2	D1	D0
C5B15	C5B14	C5B13	C5B12	C5B11	C5B10	C5B9	C5B8
0	0	0	0	0	0	0	0

D7	D6	D5	D4	D3	D2	D1	D0
C5B7	C5B6	C5B5	C5B4	C5B3	C5B2	C5B1	C5B0
0	0	0	0	0	0	0	0

7.7.7 Coefficient read/write control register (addr 0x26)

D7	D6	D5	D4	D3	D2	D1	D0
Reserved				RA	R1	WA	W1
0				0	0	0	0

7.7.8 Description

Coefficients for user-defined EQ, mixing, scaling, and bass management are handled internally in the STA339BWS via RAM. Access to this RAM is available to the user via an I^2C register interface. A collection of I^2C registers are dedicated to this function. One contains a coefficient base address, five sets of three store the values of the 24-bit coefficients to be written or that were read, and one contains bits used to control the write/read of the coefficient(s) to/from RAM.

Three different RAM banks are embedded in STA339BWS. The three banks are managed in paging mode using EQCFG register bits. They can be used to store different EQ settings. For speaker frequency compensation, a sampling frequency independent EQ must be implemented. Computing three different coefficients set for 32 kHz, 44.1kHz, 48 kHz and downloading them into the three RAM banks, it is possible to select the suitable RAM block depending from the incoming frequency with a simple I^2C write operation on register 0x31.

For example, in case of different input sources (different sampling rates), the three different sets of coefficients can be downloaded once at the start up, and during the normal play it is possible to switch among the three RAM blocks allowing a faster operation, without any additional download from the microcontroller.

To write the coefficients in a particular RAM bank, this bank must be selected first writing bit 0 and bit 1 in register 0x31. Then the write procedure below can be used.

Note that as soon as a RAM bank is selected, the EQ settings are automatically switched to the coefficients stored in the active RAM block.

Note: The read write operation on RAM coefficients works only if RLCKI (pin29) is switching and stable (ref. Table 8, tLRJT timing) and PLL must be locked (ref bit D7 reg 0x2D).

Reading a coefficient from RAM

1. Select the RAM block with register 0x31 bit1, bit0.
2. Write 6-bits of address to I^2C register 0x16.
3. Write 1 to R1 bit in I^2C address 0x26.
4. Read top 8-bits of coefficient in I^2C address 0x17.
5. Read middle 8-bits of coefficient in I^2C address 0x18.
6. Read bottom 8-bits of coefficient in I^2C address 0x19.

Reading a set of coefficients from RAM

1. Select the RAM block with register 0x31 bit1, bit0.
2. Write 6-bits of address to I^2C register 0x16.
3. Write 1 to RA bit in I^2C address 0x26.
4. Read top 8-bits of coefficient in I^2C address 0x17.
5. Read middle 8-bits of coefficient in I^2C address 0x18.
6. Read bottom 8-bits of coefficient in I^2C address 0x19.
7. Read top 8-bits of coefficient b2 in I^2C address 0x1A.
8. Read middle 8-bits of coefficient b2 in I^2C address 0x1B.
9. Read bottom 8-bits of coefficient b2 in I^2C address 0x1C.
10. Read top 8-bits of coefficient a1 in I^2C address 0x1D.
11. Read middle 8-bits of coefficient a1 in I^2C address 0x1E.
12. Read bottom 8-bits of coefficient a1 in I^2C address 0x1F.
13. Read top 8-bits of coefficient a2 in I^2C address 0x20.
14. Read middle 8-bits of coefficient a2 in I^2C address 0x21.
15. Read bottom 8-bits of coefficient a2 in I^2C address 0x22.
16. Read top 8-bits of coefficient b0 in I^2C address 0x23.
17. Read middle 8-bits of coefficient b0 in I^2C address 0x24.
18. Read bottom 8-bits of coefficient b0 in I^2C address 0x25.

Writing a single coefficient to RAM

1. Select the RAM block with register 0x31 bit1, bit0.
2. Write 6-bits of address to I^2C register 0x16.
3. Write top 8-bits of coefficient in I^2C address 0x17.
4. Write middle 8-bits of coefficient in I^2C address 0x18.
5. Write bottom 8-bits of coefficient in I^2C address 0x19.
6. Write 1 to W1 bit in I^2C address 0x26.

Writing a set of coefficients to RAM

1. Select the RAM block with register 0x31 bit1, bit0.
2. Write 6-bits of starting address to I^2C register 0x16.
3. Write top 8-bits of coefficient b1 in I^2C address 0x17.
4. Write middle 8-bits of coefficient b1 in I^2C address 0x18.
5. Write bottom 8-bits of coefficient b1 in I^2C address 0x19.
6. Write top 8-bits of coefficient b2 in I^2C address 0x1A.
7. Write middle 8-bits of coefficient b2 in I^2C address 0x1B.
8. Write bottom 8-bits of coefficient b2 in I^2C address 0x1C.
9. Write top 8-bits of coefficient a1 in I^2C address 0x1D.
10. Write middle 8-bits of coefficient a1 in I^2C address 0x1E.
11. Write bottom 8-bits of coefficient a1 in I^2C address 0x1F.
12. Write top 8-bits of coefficient a2 in I^2C address 0x20.
13. Write middle 8-bits of coefficient a2 in I^2C address 0x21.
14. Write bottom 8-bits of coefficient a2 in I^2C address 0x22.
15. Write top 8-bits of coefficient b0 in I^2C address 0x23.
16. Write middle 8-bits of coefficient b0 in I^2C address 0x24.
17. Write bottom 8-bits of coefficient b0 in I^2C address 0x25.
18. Write 1 to WA bit in I^2C address 0x26.

The mechanism for writing a set of coefficients to RAM provides a method of updating the five coefficients corresponding to a given biquad (filter) simultaneously to avoid possible unpleasant acoustic side-effects. When using this technique, the 6-bit address specifies the address of the biquad b1 coefficient (for example, 0, 5, 10, 20, 35 decimal), and the STA339BWS generates the RAM addresses as offsets from this base value to write the complete set of coefficient data.

Table 72. RAM block for biquads, mixing, scaling, bass management

Index (Decimal)	Index (Hex)	Description	Coefficient	Default
0	0x00	Channel 1 - Biquad 1	C1H10(b1/2)	0x000000
1	0x01		C1H11(b2)	0x000000
2	0x02		C1H12(a1/2)	0x000000
3	0x03		C1H13(a2)	0x000000
4	0x04		C1H14(b0/2)	0x400000
5	0x05	Channel 1 - Biquad 2	C1H20	0x000000
…	…	…	…	…
19	0x13	Channel 1 - Biquad 4	C1H44	0x400000
20	0x14	Channel 2 - Biquad 1	C2H10	0x000000
21	0x15		C2H11	0x000000
…	…	…	…	…
39	0x27	Channel 2 - Biquad 4	C2H44	0x400000

Table 72. RAM block for biquads, mixing, scaling, bass management (continued)

Index (Decimal)	Index (Hex)	Description	Coefficient	Default
40	0x28	Channel 1/2 - Biquad 8 for XO = 000 High-pass 2nd order filter for XO ≠ 000	C12H0(b1/2)	0x000000
41	0x29		C12H1(b2)	0x000000
42	0x2A		C12H2(a1/2)	0x000000
43	0x2B		C12H3(a2)	0x000000
44	0x2C		C12H4(b0/2)	0x400000
45	0x2D	Channel 3 - Biquad for XO = 000 Low-pass 2nd order filter for XO ≠ 000	C3H0(b1/2)	0x000000
46	0x2E		C3H1(b2)	0x000000
47	0x2F		C3H2(a1/2)	0x000000
48	0x30		C3H3(a2)	0x000000
49	0x31		C3H4(b0/2)	0x400000
50	0x32	Channel 1 - Prescale	C1PreS	0x7FFFFF
51	0x33	Channel 2 - Prescale	C2PreS	0x7FFFFF
52	0x34	Channel 1 - Postscale	C1PstS	0x7FFFFF
53	0x35	Channel 2 - Postscale	C2PstS	0x7FFFFF
54	0x36	Channel 3 - Postscale	C3PstS	0x7FFFFF
55	0x37	TWARN/OC - Limit	TWOCL	0x5A9DF7
56	0x38	Channel 1 - Mix 1	C1MX1	0x7FFFFF
57	0x39	Channel 1 - Mix 2	C1MX2	0x000000
58	0x3A	Channel 2 - Mix 1	C2MX1	0x000000
59	0x3B	Channel 2 - Mix 2	C2MX2	0x7FFFFF
60	0x3C	Channel 3 - Mix 1	C3MX1	0x400000
61	0x3D	Channel 3 - Mix 2	C3MX2	0x400000
62	0x3E	Unused		
63	0x3F	Unused		

User-defined EQ

The STA339BWS can be programmed for four EQ filters (biquads) per each of the two input channels. The biquads use the following equation:

$$Y[n] = 2 * (b_0 / 2) * X[n] + 2 * (b_1 / 2) * X[n-1] + b_2 * X[n-2] - 2 * (a_1 / 2) * Y[n-1] - a_2 * Y[n-2]$$
$$= b_0 * X[n] + b_1 * X[n-1] + b_2 * X[n-2] - a_1 * Y[n-1] - a_2 * Y[n-2]$$

where Y[n] represents the output and X[n] represents the input. Multipliers are 24-bit signed fractional multipliers, with coefficient values in the range of 0x800000 (-1) to 0x7FFFFF (0.9999998808).

Coefficients stored in the user defined coefficient RAM are referenced in the following manner:

CxHy0 = b_1 / 2

CxHy1 = b_2

CxHy2 = -a_1 / 2

CxHy3 = -a_2

CxHy4 = b_0 / 2

where x represents the channel and the y the biquad number. For example, C2H41 is the b_2 coefficient in the fourth biquad for channel 2.

Crossover and biquad #8

Additionally, the STA339BWS can be programmed for a high-pass filter (processing channels 1 and 2) and a low-pass filter (processing channel 3) to be used for bass-management crossover when the XO setting is 000 (user-defined). Both of these filters when defined by the user (rather than using the preset crossover filters) are second order filters that use the biquad equation given above. They are loaded into the C12H0-4 and C3Hy0-4 areas of RAM noted in *Table 72*, addresses 0x28 to 0x31.

By default, all user-defined filters are pass-through where all coefficients are set to 0, except the b_0/2 coefficient which is set to 0x400000 (representing 0.5)

Prescale

The STA339BWS provides a multiplication for each input channel for the purpose of scaling the input prior to EQ. This pre-EQ scaling is accomplished by using a 24-bit signed fractional multiplier, with 0x800000 = -1 and 0x7FFFFF = 0.9999998808. The scale factor for this multiply is loaded into RAM. All channels can use the channel-1 prescale factor by setting the Biquad link bit. By default, all prescale factors (RAM addresses 0x32 to 0x33) are set to 0x7FFFFF.

Postscale

The STA339BWS provides one additional multiplication after the last interpolation stage and the distortion compensation on each channel. This postscaling is accomplished by using a 24-bit signed fractional multiplier, with 0x800000 = -1 and 0x7FFFFF = 0.9999998808. The scale factor for this multiply is loaded into RAM. This postscale factor can be used in conjunction with an ADC equipped micro-controller to perform power-supply error correction. All channels can use the channel-1 postscale factor by setting the postscale link bit. By default, all postscale factors (RAM addresses 0x34 to 0x36) are set to 0x7FFFFF. When line output is being used, channel-3 postscale affects both channels 3 and 4.

7.7.9 Thermal warning and overcurrent adjustment (TWOCL)

The STA339BWS provides a simple mechanism for reacting to overcurrent or thermal warning detection in the power block. When the warning occurs, the TWOCL value is used to provide output attenuation clipping on all channels.

The amount of attenuation to be applied in this situation can be adjusted by modifying the overcurrent and thermal warning limiting value (RAM addr 0x37). By default, the overcurrent postscale adjustment factor is set to 0x5A9DF7 (that is, -3 dB). Once the limiting is applied, it remains until the device is reset or according to the TWRB and OCRB settings.

7.8 Variable max power correction registers (addr 0x27 - 0x28)

D7	D6	D5	D4	D3	D2	D1	D0
MPCC15	MPCC14	MPCC13	MPCC12	MPCC11	MPCC10	MPCC9	MPCC8
0	0	0	1	1	0	1	0

D7	D6	D5	D4	D3	D2	D1	D0
MPCC7	MPCC6	MPCC5	MPCC4	MPCC3	MPCC2	MPCC1	MPCC0
1	1	0	0	0	0	0	0

MPCC bits determine the 16 MSBs of the MPC compensation coefficient. This coefficient is used in place of the default coefficient when MPCV = 1.

7.9 Distortion compensation registers (addr 0x29 - 0x2A)

D7	D6	D5	D4	D3	D2	D1	D0
DCC15	DCC14	DCC13	DCC12	DCC11	DCC10	DCC9	DCC8
1	1	1	1	0	0	1	1

D7	D6	D5	D4	D3	D2	D1	D0
DCC7	DCC6	DCC5	DCC4	DCC3	DCC2	DCC1	DCC0
0	0	1	1	0	0	1	1

DCC bits determine the 16 MSBs of the distortion compensation coefficient. This coefficient is used in place of the default coefficient when DCCV = 1.

7.10 Fault detect recovery constant registers (addr 0x2B - 0x2C)

D7	D6	D5	D4	D3	D2	D1	D0
FDRC15	FDRC14	FDRC13	FDRC12	FDRC11	FDRC10	FDRC9	FDRC8
0	0	0	0	0	0	0	0

D7	D6	D5	D4	D3	D2	D1	D0
FDRC7	FDRC6	FDRC5	FDRC4	FDRC3	FDRC2	FDRC1	FDRC0
0	0	0	0	1	1	0	0

FDRC bits specify the 16-bit fault detect recovery time delay. When FAULT is asserted, the TRISTATE output is immediately asserted low and held low for the time period specified by this constant. A constant value of 0x0001 in this register is approximately 0.083 ms. The default value of 0x000C gives approximately 0.1 ms.

Note: 0x0000 is a reserved value for these registers.

7.11 Device status register (addr 0x2D)

D7	D6	D5	D4	D3	D2	D1	D0
PLLUL	FAULT	UVFAULT	Reserved	OCFAULT	OCWARN	TFAULT	TWARN

This read-only register provides fault and thermal-warning status information from the power control block. Logic value 1 for faults or warning means normal state. Logic 0 means a fault or warning detected on power bridge. The PLLUL = 1 means that the PLL is not locked.

Table 73. Status register bits

Bit	R/W	RST	Name	Description
7	R	-	PLLUL	0: PLL locked 1: PLL not locked
6	R	-	FAULT	0: fault detected on power bridge 1: normal operation
5	R	-	UVFAULT	0: VCCxX internally detected < undervoltage threshold
4	R	-	Reserved	-
3	R	-	OCFAULT	0: overcurrent fault detected
2	R	-	OCWARN	0: overcurrent warning
1	R	-	TFAULT	0: thermal fault, junction temperature over limit
0	R	-	TWARN	0: thermal warning, junction temperature is close to the fault condition

7.12 EQ coefficients and DRC configuration register (addr 0x31)

D7	D6	D5	D4	D3	D2	D1	D0
XOB	Reserved	Reserved	AMGC[3]	AMGC[2]	Reserved	SEL[1]	SEL[0]
0	0	0	0	0	0	0	0

EQ RAM

Table 74. EQ RAM select

SEL[1:0]	EQ RAM bank selected
00 / 11	Bank 0 activated
01	Bank 1 activated
10	Bank 2 activated

DRC / Anticlipping

Bits AMGC[3:2] change the behavior of the bits AMGC[1:0] as given in *Table 75* below.

Table 75. Anticlipping and DRC preset

AMGC[3:2]	Anticlipping and DRC preset selected
00	DRC / Anticlipping behavior is described in *Table 54 on page 47* (default)
01	DRC / Anticlipping behavior is described *Table 76 on page 66*
10 / 11	Reserved

Anticlipping when AMGC[3:2] = 01

Table 76. Anticlipping selection for AMGC[3:2] = 01

AMGC[1:0]	Mode
00	AC0, stereo anticlipping 0 dB limiter
01	AC1, stereo anticlipping +1.25 dB limiter
10	AC2, stereo anticlipping +2 dB limiter
11	Reserved do not use

AC0, AC1, AC2 settings are designed for the loudspeaker protection function, limiting at the minimum any audio artefacts introduced by typical anticlipping / DRC algorithms. More detailed information is available in the applications notes “Configurable output power rate using STA335BW” and “STA335BWS vs STA335BW”.

XOB

This bit can be used to bypass the crossover filters. Logic 1 means that the function is not active. In this case, high pass crossover filter works as a pass-through on the data path (b0 = 1, all the other coefficients at logic 0) while the low-pass filter is configured to have zero signal on channel-3 data processing (all the coefficients are at logic 0).

7.13 Extended configuration register (addr 0x36)

D7	D6	D5	D4	D3	D2	D1	D0
MDRC[1]	MDRC[0]	PS48DB	XAR1	XAR2	BQ5	BQ6	BQ7
0	0	0	0	0	0	0	0

Extended configuration register provides access to B^2DRC and biquad 5, 6 and 7.

7.13.1 Dual-band DRC (B^2DRC)

STA339BWS device provide a dual-band DRC (B^2DRC) on the left and right channels data path, as depicted in *Figure 20*. Dual-band DRC is activated by setting MDRC[1:0] = 1x.

Figure 20. B^2DRC scheme

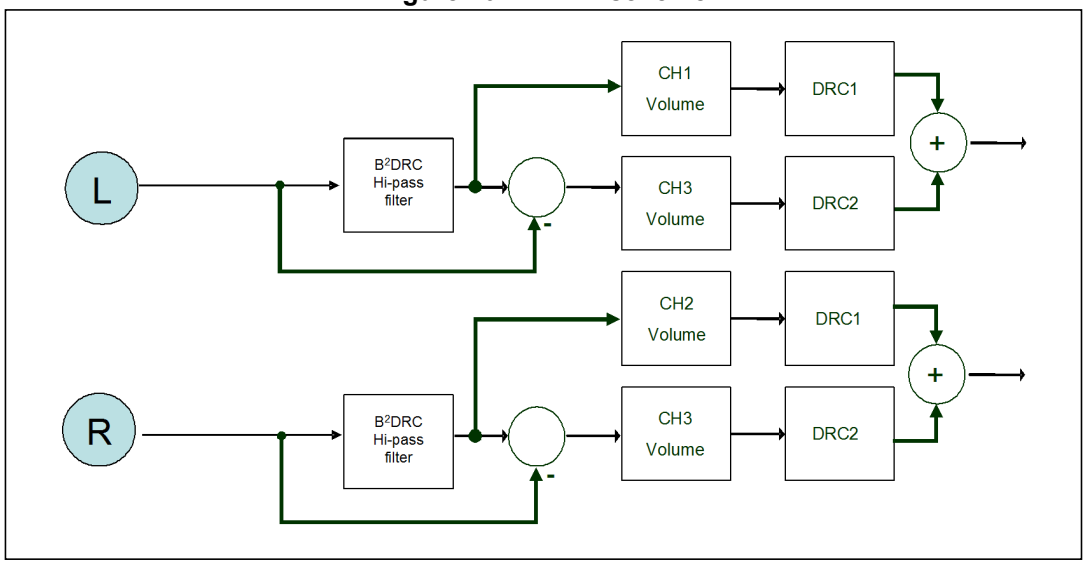

The low frequency information (LFE) is extracted from left and right channels, removing the high frequencies using a programmable biquad filter, and then computing the difference with the original signal. Limiter 1 (DRC1) is then used to control left/right high frequency components amplitude while limiter 2 (DRC2) is used to control the low frequency components (see *Chapter 7.6*).

The cut-off frequency of the high pass filters can be user defined, XO[3:0] = 0, or selected from the predefined values.

DRC1 and DRC2 are then used to independently limit L/R high frequencies and LFE channels amplitude (see *Chapter 7.6*) as well as their volume control. To be noted that, in this configuration, the dedicated channel 3 volume control can be actually acted as a bass boost enhancer as well (0.5 dB/step resolution).

The processed LFE channel is then recombined with the L and R channels in order to reconstruct the 2.0 output signal.

Sub-band decomposition

The sub-band decomposition for B^2DRC can be configured specifying the cutoff frequency. The cut off frequency can be programmed in two ways, using XO bits in register 0x0C, or using “user programmable” mode (coefficients stored in RAM addresses 0x28 to 0x31).

For the user programmable mode, use the formulae below to compute the high pass filters:

b0 = (1 + alpha) / 2 a0 = 1

b1 = -(1 + alpha) / 2 a1 = -alpha

b2 = 0 a2 = 0

where alpha = (1-sin(ω_0)) / cos(ω_0), and ω_0 is the cut-off frequency.

A first-order filter is suggested to guarantee that for every ω_0 the corresponding low-pass filter obtained as difference (as shown in *Figure 20*) has a symmetric (relative to HP filter) frequency response, and the corresponding recombination after the DRC has low ripple. Second-order filters can be used as well, but in this case the filter shape must be carefully chosen to provide good low pass response and minimum ripple recombination. For second-order is not possible to give a closed formula to get the best coefficients, but empirical adjustment should be done.

DRC settings

The DRC blocks used by B^2DRC are the same as those described in *Chapter 7.6*. B^2DRC configure automatically the DRC blocks in anticlipping mode. Attack and release thresholds can be selected using registers 0x32, 0x33, 0x34, 0x35, while attack and release rates are configured by registers 0x12 and 0x14.

Band downmixing

The low-frequency band is down-mixed to the left and right channels at the B^2DRC output. Channel volume can be used to weight the bands recombination to fine tune the overall frequency response.

7.13.2 EQ DRC mode

Setting MDRC = 01, it is possible to add a programmable biquad (the XO biquad at RAM addresses 0x28 to 0x2C is used for this purpose) to the Limiter/compressor measure path (side chain). Using EQDRC the peak detector input can be shaped in frequency using the programmable biquad. For example, if a bass boost of 2 dB is applied (using a low-shelf filter, for example), the effect is that the EQDRC out will limit bass frequencies to 2 dB below the selected attack threshold.

Generally speaking, if the biquad boosts frequency f with an amount of X dB, the level of a compressed sine wave at the output is TH - X, where TH is the selected attack threshold.

Note: EQDRC works only if the biquad frequency response magnitude is >= 0 dB for every frequency.

Figure 21. EQDRC scheme

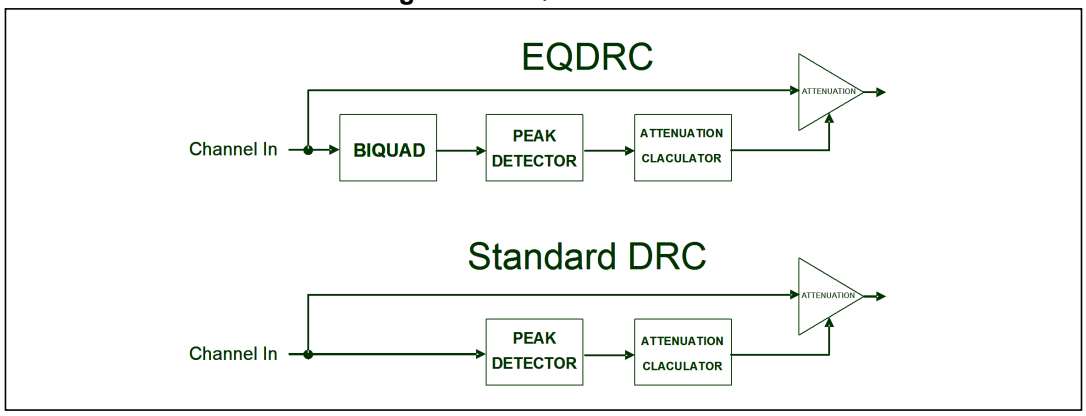

Extended postscale range

Table 77. Bit PS48DB description

PS48DB	Mode
0	Postscale value is applied as defined in coefficient RAM
1	Postscale value is applied with offset of +48 dB with respect to the coefficient RAM value

Postscale is an attenuation by default. When PS48DB is set to 1, an offset of 48 dB is applied to the configured word, so postscale can act as a gain too.

Extended attack rate

The attack rate shown in *Table 66* can be extended to provide up to 8 dB/ms attack rate on both limiters.

Table 78. Bit XAR1 description

XAR1	Mode
0	Limiter1 attack rate is configured using *Table 66*
1	Limiter1 attack rate is 8 dB/ms

Table 79. Bit XAR2 description

XAR2	Mode
0	Limiter2 attack rate is configured using *Table 66*
1	Limiter2 attack rate is 8 dB/ms

Extended biquad selector

De-emphasis filter as well as bass and treble controls can be configured as user defined filters when equalization coefficients link is activated (BQL = 1) and the corresponding BQx bit is set to 1.

Table 80. Bit BQ5 description

BQ5	Mode
0	Preset de-emphasis filter selected
1	User defined biquad 5 coefficients are selected

Table 81. Bit BQ6 description

BQ6	Mode
0	Preset bass filter selected as per *Table 65*
1	User defined biquad 6 coefficients are selected

Table 82. Bit BQ7 description

BQ7	Mode
0	Preset treble filter selected as per *Table 65*
1	User defined biquad 7 coefficients are selected

When filters from 5th to 7th are configured as user-programmable, the corresponding coefficients are stored respectively in addresses 0x14-0x18 (BQ5), 0x19-0x1D (BQ6) and 0x1E-0x22 (BQ7) as in *Table 72 on page 61*.

Note: BQx bits are ignored if BQL = 0 or if DEMP = 1 (relevant for BQ5) or CxTCB = 1 (relevant for BQ6 and BQ7).

7.14 Soft volume configuration registers (addr 0x37 - 0x38)

D7	D6	D5	D4	D3	D2	D1	D0
Reserved	Reserved	SVUPE	SVUP[4]	SVUP[3]	SVUP[2]	SVUP[1]	SVUP[0]
0	0	0	0	0	0	0	0

D7	D6	D5	D4	D3	D2	D1	D0
Reserved	Reserved	SVDWE	SVDW4]	SVDW[3]	SVDW[2]	SVDW[1]	SVDW[0]
0	0	0	0	0	0	0	0

Soft volume update has a fixed rate by default. Using register 0x37 and 0x38 it is possible to override the default behavior allowing different volume change rates.

It is also possible to independently define the fade-in (volume is increased) and fade-out (volume is decreased) rates according to the desired behavior.

Table 83. Bit SVUPE description

SVUPE	Mode
0	When volume is increased, use the default rate
1	When volume is increased, use the rates defined by SVUP[4:0]

When SVUPE = 1 the fade-in rate is defined by the SVUP[4:0] bits according to the following formula:

Fade-in rate = 48 / (N + 1) dB/ms

where N is the SVUP[4:0] value.

Table 84. Bit SVDWE description

SVDWE	Mode
0	When volume is decreased, use the default rate
1	When volume is decreased, use the rates defined by SVDW[4:0]

When SVDWE = 1 the fade-out rate is defined by the SVDW[4:0] bits according to the following formula:

Fade-in rate = 48 / (N + 1) dB/ms

where N is the SVDW[4:0] value.

Note: For fade-out rates greater than 6 dB/ms it is suggested to disable bit ZCE (Section 7.1.5 on page 33) in order to avoid any audible pop noise.

7.15 DRC RMS filter coefficients (addr 0x39-0x3E)

D7	D6	D5	D4	D3	D2	D1	D0
R_C0[23]	R_C0[22]	R_C0[21]	R_C0[20]	R_C0[19]	R_C0[18]	R_C0[17]	R_C0[16]
0	0	0	0	0	0	0	1

D7	D6	D5	D4	D3	D2	D1	D0
R_C0[15]	R_C0[14]	R_C0[13]	R_C0[12]	R_C0[11]	R_C0[10]	R_C0[9]	R_C0[8]
1	1	1	0	1	1	1	0

D7	D6	D5	D4	D3	D2	D1	D0
R_C0[7]	R_C0[6]	R_C0[5]	R_C0[4]	R_C0[3]	R_C0[2]	R_C0[1]	R_C0[0]
1	1	1	1	1	1	1	1

D7	D6	D5	D4	D3	D2	D1	D0
R_C1[23]	R_C1[22]	R_C1[21]	R_C1[20]	R_C1[19]	R_C1[18]	R_C1[17]	R_C1[16]
0	1	1	1	1	1	1	0

D7	D6	D5	D4	D3	D2	D1	D0
R_C1[15]	R_C1[14]	R_C1[13]	R_C1[12]	R_C1[11]	R_C1[10]	R_C1[9]	R_C1[8]
1	1	0	0	0	0	0	0

D7	D6	D5	D4	D3	D2	D1	D0
R_C1[7]	R_C1[6]	R_C1[5]	R_C1[4]	R_C1[3]	R_C1[2]	R_C1[1]	R_C1[0]
0	0	1	0	0	1	1	0

Signal level detection in DRC algorithm is computed using the following formula:

y(t) = c0 * abs(x(t)) + c1 * y(t-1)

where x(t) represents the audio signal applied to the limiter, and y(t) the measured level.

8 Applications

8.1 Application schematics

Figure 22 and *Figure 23* show the typical application schematics for stereo and mono configuration, respectively. Special attention has to be paid to the layout of the PCB. All the decoupling capacitors have to be placed as close as possible to the device to limit spikes on the supplies.

Figure 22. Application circuit for 2 or 2.1-channel configuration

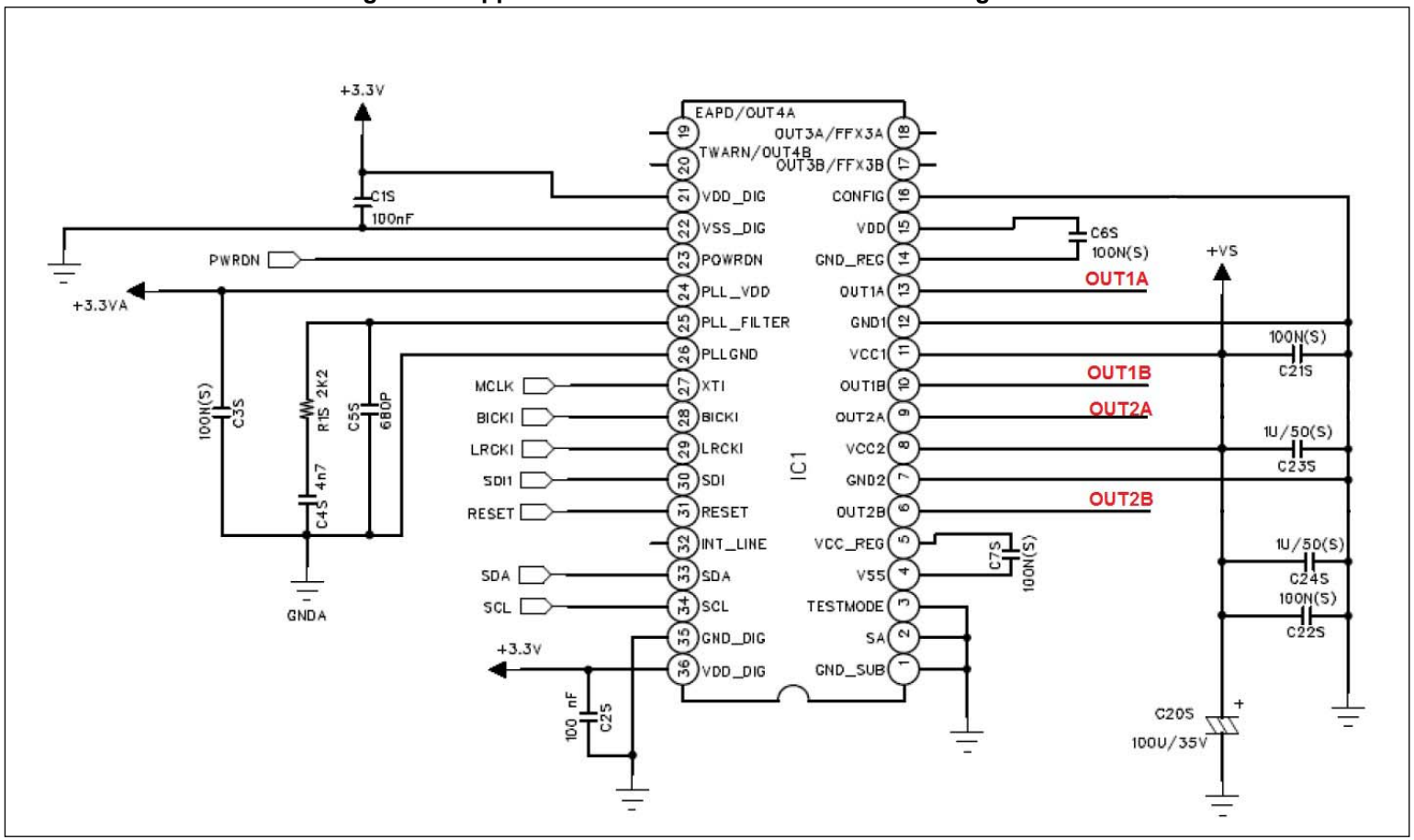

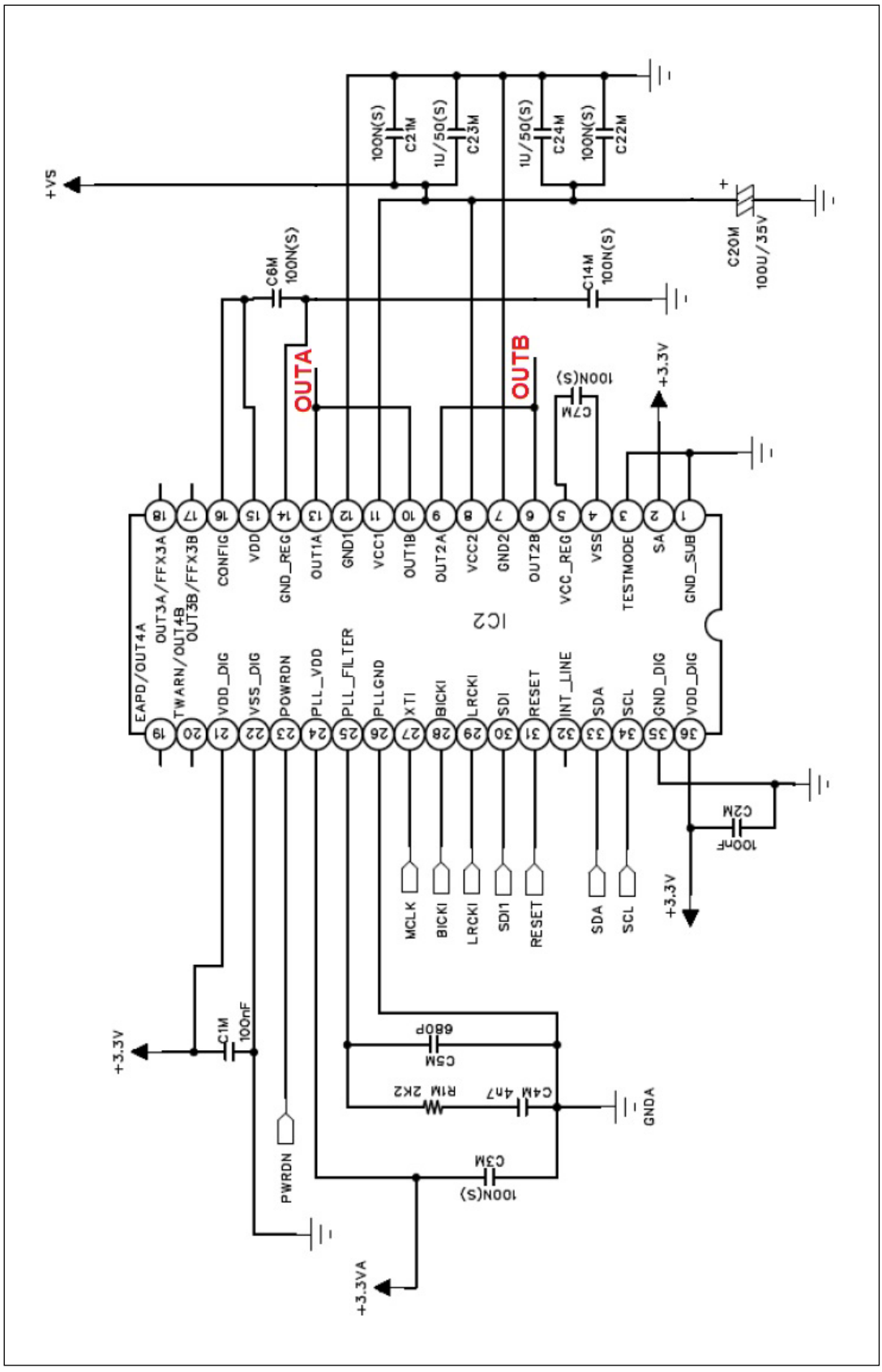

Figure 23. Application circuit for mono BTL configuration

8.2 PLL filter circuit

It is recommended to use the applications circuit and values for the PLL loop filter to achieve the best performance from the device in general applications. Note that the ground of this filter circuit has to be connected to the ground of the PLL without any resistive path. Concerning the component values, it must be taken into account that the greater the filter bandwidth, the less is the lock time but the higher is the PLL output jitter.

8.3 Typical output configuration

Figure 24 shows the typical output configuration used for BTL stereo mode. Please contact STMicroelectronics for other recommended output configurations.

Figure 24. Output configuration for stereo BTL mode (R_L = 8 Ω)

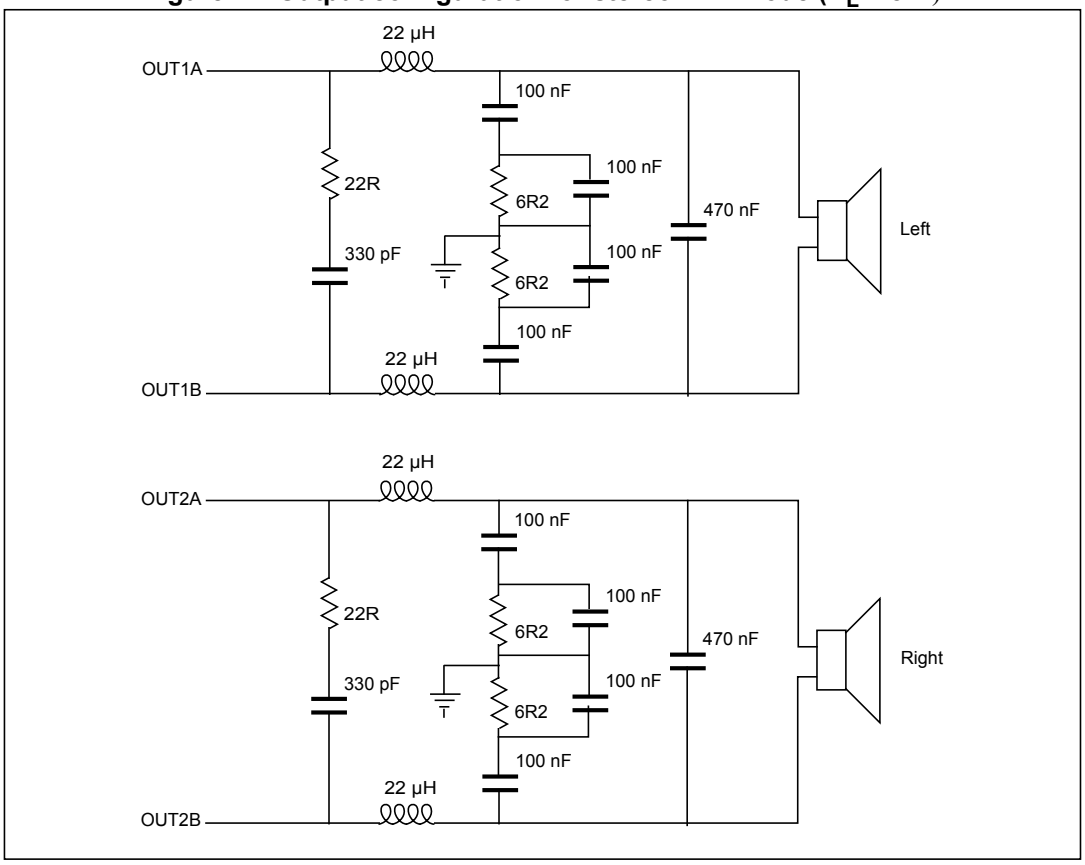

9 Package thermal characteristics

Using a double-layer PCB the thermal resistance, junction to ambient, with 2 copper ground areas of 3 x 3 cm^2 and with 16 via holes is 24 °C/W in natural air convection.

The dissipated power within the device depends primarily on the supply voltage, load impedance and output modulation level.

Thus, the maximum estimated dissipated power for the STA339BWS is:

2 x 20 W @ 8 Ω, 18 V	Pd max is approximately 4 W
2 x 9 W + 1 x 20 W @ 4 Ω, 8 Ω, 18 V	Pd max is approximately 5 W

Figure 25 shows the power derating curve for the PowerSSO-36 package on PCBs with copper areas of 2 x 2 cm^2 and 3 x 3 cm^2.

Figure 25. PowerSSO-36 power derating curve

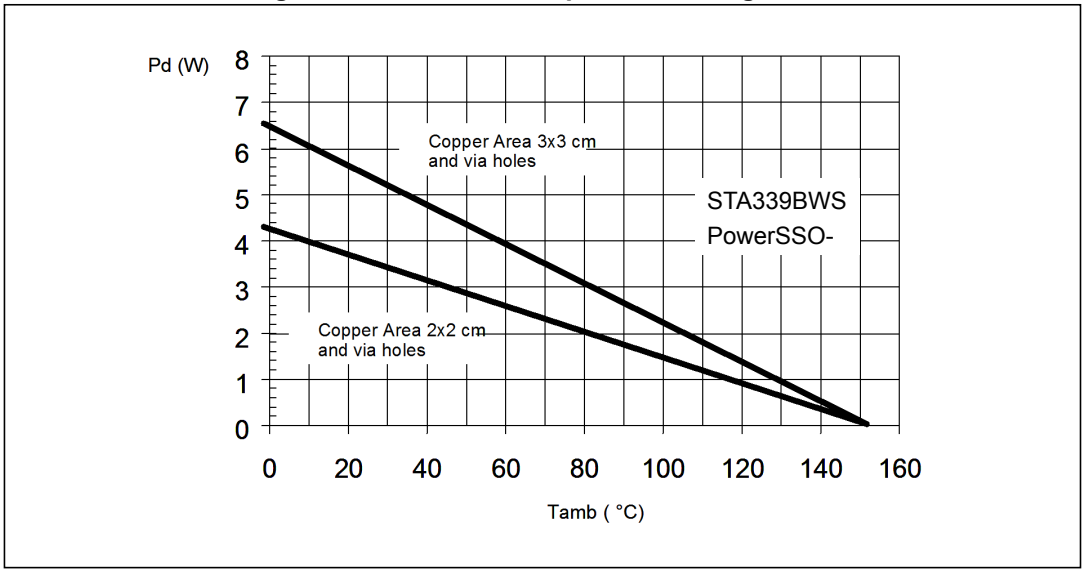

10 Package mechanical data

In order to meet environmental requirements, ST offers these devices in different grades of ECOPACK® packages, depending on their level of environmental compliance. ECOPACK® specifications, grade definitions and product status are available at: www.st.com. ECOPACK® is an ST trademark.

Figure 26 shows the package outline and *Table 85* gives the dimensions.

Table 85. PowerSSO-36 EPD dimensions

Symbol	Dimensions in mm			Dimensions in inches		
	Min	Typ	Max	Min	Typ	Max
A	2.15	-	2.47	0.085	-	0.097
A2	2.15	-	2.40	0.085	-	0.094
a1	0.00	-	0.10	0.00	-	0.004
b	0.18	-	0.36	0.007	-	0.014
c	0.23	-	0.32	0.009	-	0.013
D	10.10	-	10.50	0.398	-	0.413
E	7.40	-	7.60	0.291	-	0.299
e	-	0.5	-	-	0.020	-
e3	-	8.5	-	-	0.335	-
F	-	2.3	-	-	0.091	-
G	-	-	0.10	-	-	0.004
H	10.10	-	10.50	0.398	-	0.413
h	-	-	0.40	-	-	0.016
k	0	-	8 degrees	0	-	8 degrees
L	0.60	-	1.00	0.024	-	0.039
M	-	4.30	-	-	0.169	-
N	-	-	10 degrees	-	-	10 degrees
O	-	1.20	-	-	0.047	-
Q	-	0.80	-	-	0.031	-
S	-	2.90	-	-	0.114	-
T	-	3.65	-	-	0.144	-
U	-	1.00	-	-	0.039	-
X	4.10	-	4.70	0.161	-	0.185
Y	6.50	-	7.10	0.256	-	0.280

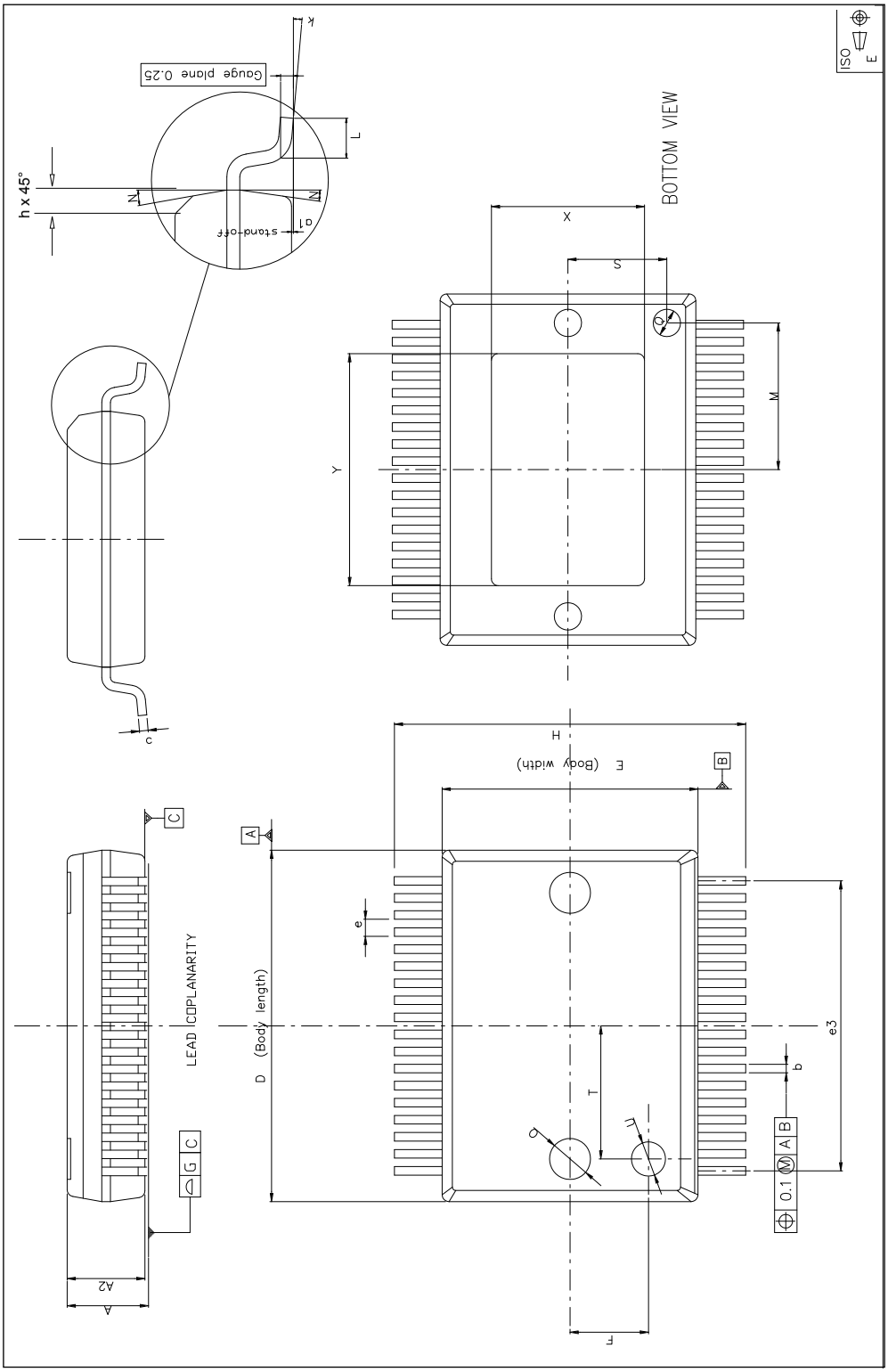

Figure 26. PowerSSO-36 EPD outline drawing

11 Revision history

Table 86. Document revision history

Date	Revision	Changes
10-Dec-2008	1	Initial release.
16-Feb-2009	2	Updated names/descriptions for pins 17-20 in *Chapter 2 on page 10* Added cross reference to I^2S interface setup in *Section 3.6: Power on/off sequence on page 18* Added *Figure 4: Power-off sequence for pop-free turn-off on page 18* Updated text and *Figure 22: Application diagram on page 71* Updated *Section 7.2: PLL filter on page 71*
01-Mar-2010	3	Updated presentation Removed master mute from *Section 7.2.5 on page 46* Added Rth j-amb typical value to *Table 4 on page 12* Updated Biquad # in *Figure 8 on page 19* Updated section *Fault detect recovery bypass on page 27* Updated SV naming in *Table 42 on page 35* Updated CxBO description in *Table 62 on page 50* Updated Biquad # for C12Hx in *Table 72 on page 61* Updated text in sections *Crossover and biquad #8*, *Prescale* and *Postscale on page 63*.
17-Dec-2010	4	“Sound Terminal” now has registered trademark status Updated test circuit in *Figure 3 on page 15* Removed text concerning hard mute in *Section 7.2 on page 44* Updated coefficient register addresses towards end of *Section 7.13.2 on page 68* Updated applications circuit in *Figure 24 on page 74*
22-Nov-2011	5	Updated bit D4 to “1” in *Section 7.2.1: Mute/line output configuration register (addr 0x06) on page 45*
20-Sep-2012	6	Added *Section 4 on page 17* Modified *Note:: The read write operation on RAM coefficients works only if RLCKI (pin29) is switching and stable (ref. Table 8, tLRJT timing) and PLL must be locked (ref bit D7 reg 0x2D).* Updated Company information appearing on last page of document
24-Oct-2013	7	Modified I_{LIM} and I_{SCP} min. values in *Table 7 on page 14*
22-Sep-2014	8	Updated power section paragraph in *Section 1: Description* Added *1 channel mono-parallel (OCFG = 11)* in *Section 7.1.6: Configuration register F (addr 0x05)* Updated *Figure 22: Application circuit for 2 or 2.1-channel configuration* and added *Figure 23: Application circuit for mono BTL configuration*

IMPORTANT NOTICE – PLEASE READ CAREFULLY

STMicroelectronics NV and its subsidiaries (“ST”) reserve the right to make changes, corrections, enhancements, modifications, and improvements to ST products and/or to this document at any time without notice. Purchasers should obtain the latest relevant information on ST products before placing orders. ST products are sold pursuant to ST’s terms and conditions of sale in place at the time of order acknowledgement.

Purchasers are solely responsible for the choice, selection, and use of ST products and ST assumes no liability for application assistance or the design of Purchasers’ products.

No license, express or implied, to any intellectual property right is granted by ST herein.

Resale of ST products with provisions different from the information set forth herein shall void any warranty granted by ST for such product.

ST and the ST logo are trademarks of ST. All other product or service names are the property of their respective owners.

Information in this document supersedes and replaces information previously supplied in any prior versions of this document.

© 2014 STMicroelectronics – All rights reserved