SGS-THOMSON MICROELECTRONICS

ST6215L/25L

LOW VOLTAGE 8-BIT ROM MCUs WITH A/D CONVERTER AND 28 PINS

- 2.4 to 3.9V Supply Operating Range
- 4 MHz Maximum Clock Frequency
- 0 to +70°C Operating Temperature Range
- Run, Wait and Stop Modes
- 5 Interrupt Vectors
- Look-up Table capability in Program Memory
- Data Storage in Program Memory: User selectable size
- Data RAM: 64bytes
- 20 I/O pins, fully programmable as:
  - Input with pull-up resistor
  - Input without pull-up resistor
  - Input with interrupt generation
  - Open-drain or push-pull output
  - Analog Input
- 8 I/O lines can sink up to 12mA to drive LEDs
- 8-bit Timer/Counter with 7-bit programmable prescaler
- Digital Watchdog
- 8-bit A/D Converter with 16 analog inputs
- On-chip Clock oscillator can be driven by Quartz Crystal Ceramic resonator or RC network
- Power-on Reset
- One external Non-Maskable Interrupt
- ST626x-EMU2 Emulation and Development System (connects to an MS-DOS PC via an RS232 serial line)

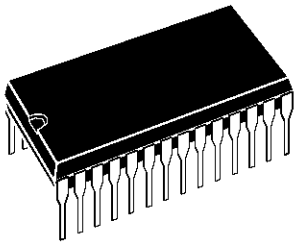

PDIP28

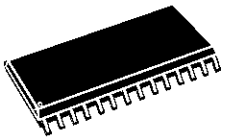

PSO28

DEVICE SUMMARY

DEVICE	ROM (Bytes)
ST6215L	1836
ST6225L	3884

Rev. 1.0

1 GENERAL DESCRIPTION

1.1 INTRODUCTION

The ST6215L/25L are low voltage mask programmed ROM version of ST62T15C,T25C OTP devices.

They offer the same functionality as OTP devices, selecting as ROM options the options defined in the programmable option byte of the OTP version, with the exception of the LVD Reset that is not available.

Figure 1. Programming wave form

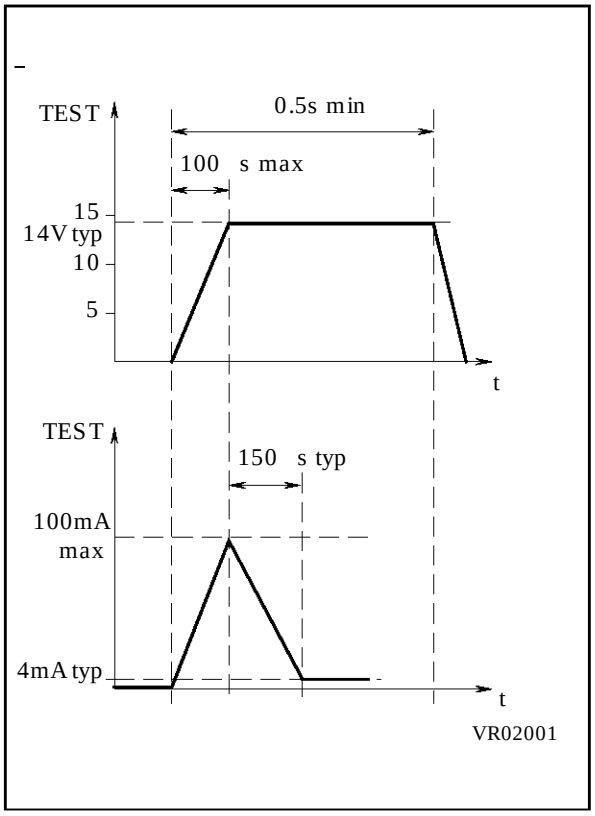

1.2 ROM READOUT PROTECTION

If the ROM READOUT PROTECTION option is selected, a protection fuse can be blown to prevent any access to the program memory content.

In case the user wants to blow this fuse, high voltage must be applied on the TEST pin.

Figure 2. Programming Circuit

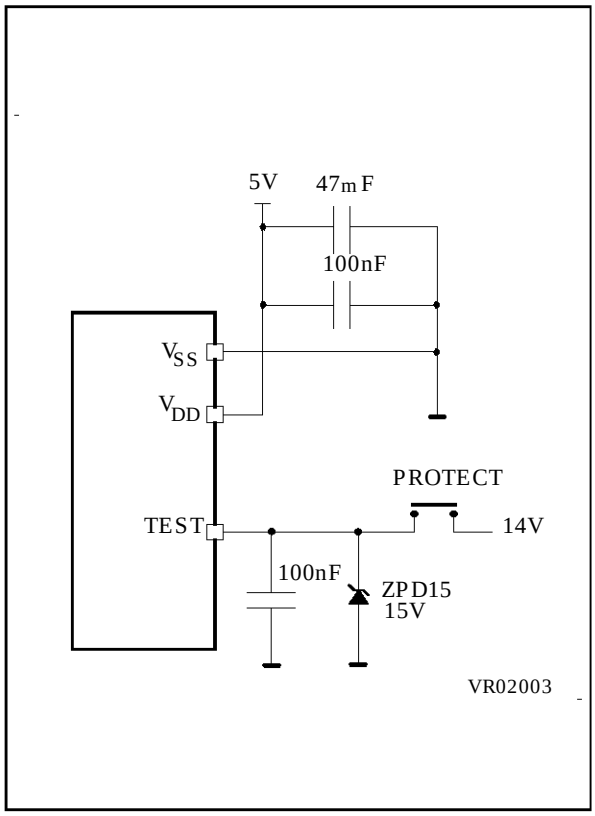

Note: ZPD15 is used for overvoltage protection

ST6215L/25L MICROCONTROLLER OPTION LIST

Customer . . . . . .
Address . . . . . .
. . . . . .
Contact . . . . . .
Phone No . . . . . .
Reference . . . . . .

SGS-THOMSON Microelectronics references

Device:	[ ] ST6215L	[ ] ST6225L
Package:	[ ] Dual in Line Plastic	[ ] Small Outline Plastic with conditionning:
		[ ] Standard (Stick)
		[ ] Tape & Reel
Temperature Range:	[ ] 0°C to + 70°C	
Special Marking:	[ ] No	[ ] Yes "_ _ _ _ _ _ _ _ _ _ _ _"

Authorized characters are letters, digits, '.', '-', '/' and spaces only.

Maximum character count:	DIP28:	10
	SO28:	8
Oscillator Source Selection:	[ ] Crystal Quartz/Ceramic resonator	
	[ ] RC Network	
Watchdog Selection:	[ ] Software Activation [ ] Hardware Activation	
ROM Readout Protection:	[ ] Disabled (Fuse cannot be blown)	
	[ ] Enabled (Fuse can be blown by the customer)	
Note:	No part is delivered with protected ROM. The fuse must be blown for protection to be effective.	

External STOP Mode Contro	[ ] Enabled	[ ] Disabled
TIMER pin pull-up	[ ] Enabled	[ ] Disabled
NMI pin pull-up	[ ] Enabled	[ ] Disabled

Comments :
Supply Operating Range in the application:
Oscillator Fequency in the application:
Notes . . . . . .
Signature . . . . . .
Date . . . . . .

1.3 ORDERING INFORMATION

The following section deals with the procedure for transfer of customer codes to SGS-THOMSON.

1.3.1 Transfer of Customer Code

Customer code is made up of the ROM contents and the list of the selected mask options. The ROM contents are to be sent on diskette, or by electronic means, with the hexadecimal file generated by the development tool. All unused bytes must be set to FFh.

The selected mask options are communicated to SGS-THOMSON using the correctly filled OPTION LIST appended.

1.3.2 Listing Generation and Verification

When SGS-THOMSON receives the user's ROM contents, a computer listing is generated from it. This listing refers exactly to the mask which will be used to produce the specified MCU. The listing is then returned to the customer who must thoroughly check, complete, sign and return it to SGS-THOMSON. The signed listing forms a part of the contractual agreement for the creation of the specific customer mask.

The SGS-THOMSON Sales Organization will be pleased to provide detailed information on contractual points.

Table 1. ROM Memory Map for ST6215L

Device Address	Description
0000h-087Fh	Reserved
0880h-0F9Fh	User ROM
0FA0h-0FEFh	Reserved
0FF0h-0FF7h	Interrupt Vectors
0FF8h-0FFBh	Reserved
0FFCh-0FFDh	NMI Interrupt Vector
0FFEh-0FFFh	Reset Vector

Table 2. ROM Memory Map for ST6225L

Device Address	Description
0000h-007Fh	Reserved
0080h-0F9Fh	User ROM
0FA0h-0FEFh	Reserved
0FF0h-0FF7h	Interrupt Vectors
0FF8h-0FFBh	Reserved
0FFCh-0FFDh	NMI Interrupt Vector
0FFEh-0FFFh	Reset Vector

Table 3. ROM version Ordering Information

Sales Type	ROM	Temperature Range	Package
ST6215LB1/XXX	1836 Bytes	0 to +70°C	PDIP28
ST6215LM1/XXX			PSO28
ST6225LB1/XXX	3884 Bytes		PDIP28
ST6225LM1/XXX			PSO28

2 ELECTRICAL CHARACTERISTICS

2.1 ABSOLUTE MAXIMUM RATINGS

This product contains devices to protect the inputs against damage due to high static voltages, however it is advisable to take normal precaution to avoid application of any voltage higher than the specified maximum rated voltages.

For proper operation it is recommended that V_I and V_O be higher than V_{SS} and lower than V_{DD}. Reliability is enhanced if unused inputs are connected to an appropriate logic voltage level (V_{DD} or V_{SS}).

Power Considerations. The average chip-junction temperature, Tj, in Celsius can be obtained from:

Tj=TA + PD x RthJA

Where: TA = Ambient Temperature.

RthJA = Package thermal resistance (junction-to ambient).

PD = Pint + Pport.

Pint = IDD x VDD (chip internal power).

Pport = Port power dissipation (determined by the user).

Symbol	Parameter	Value	Unit
V_{DD}	Supply Voltage	-0.3 to 7.0	V
V_I	Input Voltage	V_{SS} - 0.3 to V_{DD} + 0.3(1)	V
V_O	Output Voltage	V_{SS} - 0.3 to V_{DD} + 0.3(1)	V
I_O	Current Drain per Pin Excluding V_{DD}, V_{SS}	±10	mA
IV_{DD}	Total Current into V_{DD} (source)	50	mA
IV_{SS}	Total Current out of V_{SS} (sink)	50	mA
Tj	Junction Temperature	150	°C
T_{STG}	Storage Temperature	-60 to 150	°C

Notes:

- Stresses above those listed as "absolute maximum ratings" may cause permanent damage to the device. This is a stress rating only and functional operation of the device at these conditions is not implied. Exposure to maximum rating conditions for extended periods may affect device reliability.
- (1) Within these limits, clamping diodes are guarantee to be not conductive. Voltages outside these limits are authorised as long as injection current is kept within the specification.

2.2 RECOMMENDED OPERATING CONDITIONS

Symbol	Parameter	Test Conditions	Value			Unit
			Min.	Typ.	Max.	
T_A	Operating Temperature	1 Suffix Version	0		70	°C
V_{DD}	Operating Supply Voltage	f_{OSC} = 2MHz f_{OSC} = 4MHz	2.4 3		3.9 3.9	V
f_{OSC}	Oscillator Frequency[2)]	V_{DD} = 2.4V V_{DD} = 3.0V	0 0		2.0 4.0	MHz
I_{INJ+}	Pin Injection Current (positive)	V_{DD} = 2.4 to 3.9V			+5	mA
I_{INJ-}	Pin Injection Current (negative)	V_{DD} = 2.4 to 3.9V			-5	mA

Notes:

1. Care must be taken in case of negative current injection, where adapted impedance must be respected on analog sources to not affect the A/D conversion. For a -1mA injection, a maximum 10 KΩ is recommended.

2.An oscillator frequency above 1MHz is recommended for reliable A/D results

Figure 3. Maximum Operating FREQUENCY (Fmax) Versus SUPPLY VOLTAGE (V_{DD})

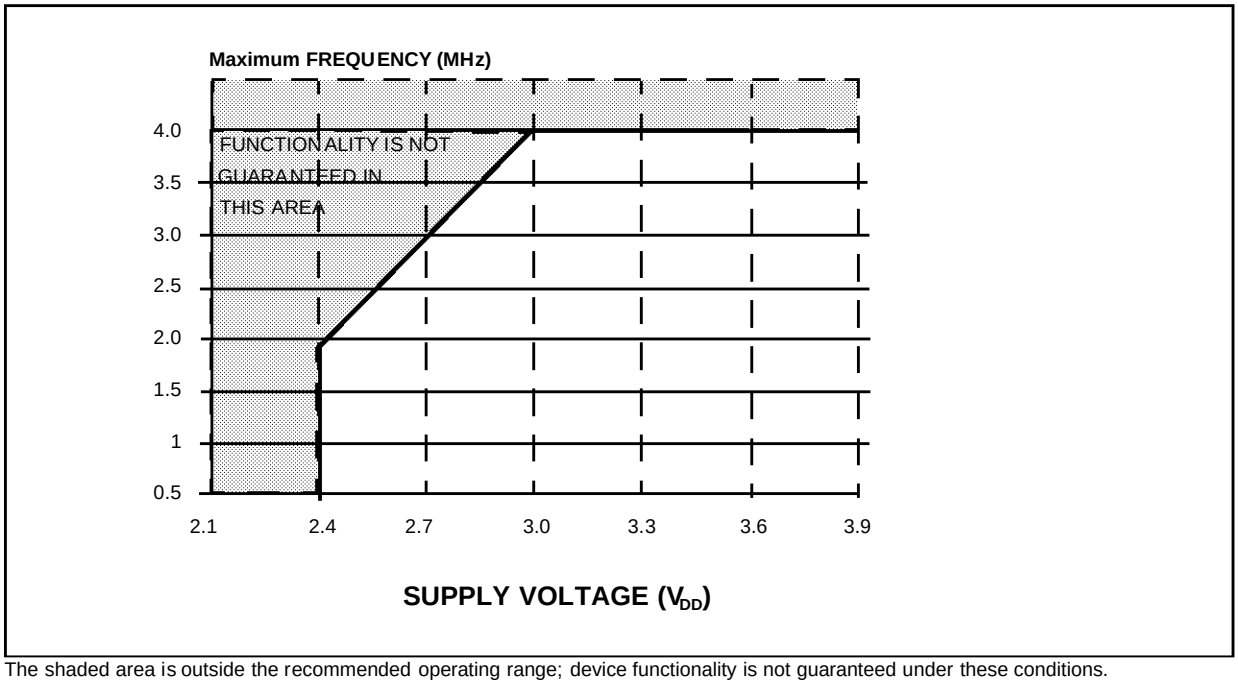

The shaded area is outside the recommended operating range; device functionality is not guaranteed under these conditions.

2.3 DC ELECTRICAL CHARACTERISTICS

(T_A = 0 to +70°C unless otherwise specified)

Symbol	Parameter	Test Conditions	Value			Unit
			Min.	Typ.	Max.	
V_{IL}	Input Low Level Voltage All Input pins				V_{DD} x 0.2	V
V_{IH}	Input High Level Voltage All Input pins		V_{DD} x 0.8			V
V_{Hys}	Hysteresis Voltage (1) All Input pins	V_{DD}= 3V	0.2			V
V_{OL}	Low Level Output Voltage All Output pins	V_{DD}= 3.0V; I_{OL} = +10µA V_{DD}= 3.0V; I_{OL} = + 3.0mA V_{DD}= 2.4V; I_{OL} = + 1.5mA			0.1 0.8 0.8	V
	Low Level Output Voltage 20 mA Sink I/O pins	V_{DD}= 3.0V; I_{OL} = +10µA V_{DD}= 3.0V; I_{OL} = + 8mA V_{DD}= 3.0V; I_{OL} = +12mA V_{DD}= 2.4V; I_{OL} = + 5mA			0.1 0.8 1.3 0.8	
V_{OH}	High Level Output Voltage All Output pins	V_{DD}= 3.0V; I_{OH} = -10µA V_{DD}= 3.0V; I_{OH} = -1.5mA V_{DD}= 2.4V; I_{OH} = -10µA	2.9 2.0 2.3			V
R_{PU}	Pull-up Resistance	All Input pins	100	250	600	KΩ
		RESET pin	400	600	1200	
I_{IL} I_{IH}	Input Leakage Current All Input pins but RESET	V_{IN} = V_{SS} (No Pull-Up configured) V_{IN} = V_{DD}		0.1	1.0	µA
	Input Leakage Current RESET pin	V_{IN} = V_{SS} V_{IN} = V_{DD}	-8	-16	-30 10	
I_{DD}	Supply Current in RESET Mode	V_{RESET}=V_{SS} f_{OSC}=4MHz			1.5	mA
	Supply Current in RUN Mode (2)	V_{DD}=3.0V f_{INT}=4MHz			1.5	mA
	Supply Current in WAIT Mode (3)	V_{DD}=3.0V f_{INT}=4MHz			0.5	mA
	Supply Current in STOP Mode(3)	I_{LOAD}=0mA V_{DD}=3.0V			2	µA

Notes:

(1) Hysteresis voltage between switching levels

(2) All peripherals running

(3) All peripherals in stand-by

DC ELECTRICAL CHARACTERISTICS(Cont'd)

2.4 AC ELECTRICAL CHARACTERISTICS

((T$_A$ = 0 to +70°C unless otherwise specified

Symbol	Parameter	Test Conditions	Value			Unit
			Min.	Typ.	Max.	
t_{REC}	Supply Recovery Time (1)		100			ms
f_{RC}	Internal frequency with RC oscillator 2) 3)	VDD=3.0V R=47kΩ R=100kΩ R=470kΩ	2.5 1.4 450	3 1.7 520	3.5 2.1 600	MHz MHz kHz
C_{IN}	Input Capacitance	All Inputs Pins			10	pF
C_{OUT}	Output Capacitance	All Outputs Pins			10	pF

Notes:
1. Period for which V_{DD} has to be connected at 0V to allow internal Reset function at next power-up.
2 An oscillator frequency above 1MHz is recommended for reliable A/D results.
3. Measure performed with OSCin pin soldered on PCB, with an around 2pF equivalent capacitance.

2.5 A/D CONVERTER CHARACTERISTICS

(T_A = 0 to +70°C unless otherwise specified)

Symbol	Parameter	Test Conditions	Value			Unit
			Min.	Typ.	Max.	
Res	Resolution			8		Bit
A_{TOT}	Total Accuracy (1) (2)	f_{OSC} > 1.2MHz, V_{DD}=3.0V f_{OSC} > 1.2MHz, V_{DD}=2.4V f_{OSC} > 32kHz, V_{DD}=3.0V			±25 ±35 ±50	mV
t_C	Conversion Time	f_{OSC} = 2MHz f_{OSC} = 4 MHz		280 140		µs
ZIR	Zero Input Reading	Conversion result when $V_{IN} = V_{SS}$	00			Hex
FSR	Full Scale Reading	Conversion result when $V_{IN} = V_{DD}$			FF	Hex
AD_I	Analog Input Current During Conversion	V_{DD}= 4.0V			1.0	µA
AC_{IN}	Analog Input Capacitance			2	5	pF

Notes:
1. Noise at VDD, VSS <10mV
2. With oscillator frequencies less than 1MHz, the A/D Converter accuracy is decreased.

2.6 TIMER CHARACTERISTICS

(((T_A = 0 to +70°C unless otherwise specified)

Symbol	Parameter	Test Conditions	Value			Unit
			Min.	Typ.	Max.	
f_{IN}	Input Frequency on TIMER Pin					MHz
t_W	Pulse Width at TIMER Pin	V_{DD} = 2.4V	250			ns

.

Notes:

Information furnished is believed to be accurate and reliable. However, SGS-THOMSON Microelectronics assumes no responsibility for the consequences of use of such information nor for any infringement of patents or other rights of third parties which may result from its use. No license is granted by implication or otherwise under any patent or patent rights of SGS-THOMSON Microelectronics. Specification mentioned in this publication are subject to change without notice. This publication supersedes and replaces all information previously supplied.
SGS-THOMSON Microelectronics products are not authorized for use as critical components in life support devices or systems without express written approval of SGS-THOMSON Microelectronics.

©1997 SGS-THOMSON Microelectronics -Printed in Italy - All Rights Reserved.

SGS-THOMSON Microelectronics GROUP OF COMPANIES
Australia - Brazil - Canada - China - France - Germany - Italy - Japan - Korea - Malaysia - Malta - Morocco - The Netherlands - Singapore - Spain - Sweden - Switzerland - Taiwan - Thailand - United Kingdom - U.S.A.